FILE COPY
DO NOT
REMOVE

ASHRAE TRANSACTIONS

TECHNICAL AND SYMPOSIUM PAPERS

PRESENTED AT THE

1988 WINTER MEETING

IN DALLAS, TEXAS

OF THE

AMERICAN SOCIETY OF HEATING, REFRIGERATING

AND AIR-CONDITIONING ENGINEERS, INC.

1988

VOLUME 94, PART 1

No. 3144

A MODEL OF AN AMMONIA-WATER FALLING FILM ABSORBER

H. Perez-Blanco, Ph.D.
ASHRAE Member

ABSTRACT

This paper describes a model of the absorption process in a falling film ammonia-water absorber. The model consists of two ordinary, first-order differential equations with suitable inlet and interface conditions. The model was validated by comparing its predictions to experimental data. The objective of the work was to define strategies to enhance the absorption process in order to downsize absorbers. It was found that in most situations of practical interest, the mass transfer process in the falling film controls the absorption rate. The possibility of water evaporation and migration in the absorber is discussed, outlining how it can degrade performance.

INTRODUCTION

Absorption machines are employed as heating and/or cooling devices (Bogart 1981). The working fluids commonly used are solutions of ammonia water or lithium bromide water. In the absorber of ammonia-water machines, a somewhat complex transport process takes place. The ammonia vapor is absorbed in a solution of ammonia water, generating the heat of condensation and of mixing. The heat generated is, in turn, transferred to a cooling fluid, and, depending on the machine application, the heat is employed for space heating or rejected to the environment as waste heat. Although the type of absorber employed varies, a fairly typical one is the falling film configuration. The transport process in a falling film absorber is illustrated in Figure 1. A falling film of ammonia-water solution slides down the outside of a tube wall. The ammonia vapor fills the space around the tubes and is absorbed into the falling film, generating heat. The heat is transferred through the film, across the tube wall, to the cooling fluid.

For economic and aesthetic reasons, it is desirable to decrease the size of absorbers; to do this, the rate of absorption must be increased. This rate depends on several transport operations, namely, diffusion of ammonia through the vapor phase and into the liquid film and heat transfer in the vapor phase, liquid film, metallic wall, and coolant. Any of these operations may control the entire absorption process. For instance, if the flow of cooling water is too low, heat transfer from the wall to the fluid will occur at a slow rate, and then the heat of absorption will not be readily dissipated. The film temperature will rise and its vapor pressure will consequently increase, eliminating the driving force for mass transfer; the rate of absorption will then decrease. In such a case, the heat transfer coefficient from the wall to the cooling fluid is said to be controlling the whole process. The objective of this work was to formulate a simple yet realistic model of this rather complicated process. An understanding of which operations control the absorber process will open the way for applying enhancement techniques for downsizing.

Previous work on this topic has focused almost entirely on modeling the simultaneous heat and mass transfer process in the falling film of solution, both for laminar and turbulent flow. This focus on the falling film may be due to the fact that, in previously published work, the controlling resistance to the absorption process was assumed to occur in the falling film as a heat transfer resistance (Briggs 1971). The current study is concerned with laminar flow, so only the literature concerning laminar flows will be reviewed. The penetration theory

H. Perez-Blanco is a Research Engineer, Oak Ridge National Laboratory.

(Higbie 1935), which applies to laminar falling films for short exposure times, determines heat and mass transfer coefficients proportional to the square root of the molecular diffusivity and of the thermal diffusivity, respectively. Both coefficients are proportional to the square root of the exposure time. This theory should be adequate to predict heat and mass transfer in absorbers if the falling film is remixed periodically to ensure surface renewal in order to comply with the assumption of short exposure times. In addition, the flow must be laminar with no interface ripples.

Solutions for the simultaneous heat and mass transfer problem in lithium bromide-water solution have been presented in at least three references. In Grigoreva and Nakoryakov (1977), the continuity and energy equations were solved assuming that the film had a constant velocity, whereas in actuality a parabolic velocity profile is more realistic. This study shows that for typical lithium bromide-water absorber conditions, the concentration at the film surface reaches equilibrium faster than the temperature, suggesting the existence of "subcooling." The correct parabolic velocity profile was adopted in Grossman (1982). The correlations of this study show that for typical lithium bromide absorber conditions, in which the Lewis number is less than one, the development of the concentration boundary layer lags behind that of the thermal boundary layer. In Andberg (1986), the rate of mass absorption as compared with that of heat transfer is qualitatively similar to that predicted in Grossman. It is possible to conclude, then, that in lithium bromide units, the absorption process in the falling film is mass transfer controlled.

The waves and ripples in falling films have long been recognized as agents that enhance mass transfer. The treatment of these effects is difficult because of the different physical mechanisms that may produce the waves and ripples (Sherwood et al. 1976) and the limited understanding of turbulence. In Bauerje et al. (1967), the proposed model assumes that each wave has an associated circulation cell or eddy. The surface liquid renewal and the associated enhancement of mass transfer are calculated from assumptions concerning the size distribution of the eddies. Good agreement with experimental data of absorption of gases in water was obtained. The enhancement of mass transfer was estimated in Ruckenstein and Berkente (1968) based on the assumption that the eddies are generated by changes in surface tension. The Marangoni effect, according to this paper, is entirely due to surface tension effects and can be calculated on that basis.

Previous work focused on the transport process within the falling film. The relative importance of the other transport operations, shown in Figure 1, remains unclear. It is unknown how the mass transfer in the vapor phase, or the cooling water flow rate, contributes to speed up or to slow down the overall absorption process. In the present work, the treatment is extended beyond the analysis of the falling film. The binary vapor phase and cooling fluid conditions are taken into account to determine which process is controlling under different circumstances. A model that can be implemented and solved numerically with a personal computer is presented, and a limited experimental validation of the model is outlined. The controlling resistance to the absorption process is identified, and research areas to enhance the process are suggested.

THE MODEL

The mathematical model presented here is for laminar, steady flow at low Reynolds numbers. Uniform wetting of the tube surface is assumed (Figure 2). One-dimensional flow is considered along the angular coordinate ϕ. This assumption implies that heat and mass transfer coefficients can be obtained either from the literature or derived from experimental data, allowing the use of ordinary, rather than partial, differential equations in the model. This simplification was justified on the following grounds. A personal computer, somewhat limited in memory and in processing capabilities, was employed for this work. It was deemed adequate to keep the model as simple as possible without compromising realistic features, in order to avoid having to break up the computer program into several modules that had to be compiled and executed separately. In addition, the limited thermal conductivity and molecular diffusivity data available for this solution may not warrant modeling a two-dimensional flow. The mass and energy balances are formulated for the control volume indicated by the dotted line. The complete derivation of the equation is shown in the Appendix. The equation of conservation of mass for unit length of pipe is

$$\frac{dm_1}{d\phi} = (R + \delta)\ (-m_w + m_a)\ . \tag{1}$$

The right-hand side of Equation 1 represents the difference between the mass flux of water out of the solution and the ammonia mass flux into the solution. The ammonia flux is given by Fick's Law:

$$m_a = \frac{K_l M_a (x_i - x_a)}{(1 - \lambda x_i)} , \tag{2}$$

with

$$\lambda = 1 + \frac{m_w}{M_w} \frac{M_a}{m_a} . \tag{3}$$

The value of λ is proportional to the ratio of the flow of water vapor out of the solution to the flow of ammonia vapor into the solution. Although λ is normally equal to one (namely, no water evaporates from the solution), it may under certain conditions differ from one. Its value must be established from physical considerations. The impact of λ on absorber performance is shown in the results and discussion section.

The equation of conservation of energy is

$$\frac{dm_l h_l}{d\phi} = (R + \delta) \cdot [m_a h_a - m_w h_w - \frac{U R}{R + \delta} (T_l - T_c) - h_y (T_l - T_v)] \tag{4}$$

The energy balance (Equation 4) shows that the energy of the film is a result of the enthalpy gained through ammonia absorption, the enthalpy lost through water evaporation (if any), and the thermal energy exchanged with the coolant and with the vapor.

The solution of Equations 1 through 4 calls for starting conditions at ϕ equal to zero and for the concentration of ammonia at the liquid vapor interface. Whereas the starting conditions are easily formulated, the interface conditions deserve special consideration. In this type of problem, the interface conditions may be conceptualized by a two-film model (Figure 3) (Bird et al. 1960). A certain liquid concentration, x_i, and vapor concentration, y_i, exist at the interface, which in the liquid side is at temperature T_i. The absorber pressure is p. The question is, how are T_i, p, x_i, and y_i interrelated? In Andberg 1986, it is assumed that x_i and y_i are in thermodynamic equilibrium, essentially a function of T_i and p. This is adequate for nonvolatile absorbents. When this condition was applied in the present model, excessively high mass transfer rates were calculated, well beyond any values observed experimentally.

When a resistance to interphase mass transfer is present, its effect is to decouple x_i and y_i (Bird et al. 1960). This decoupling was found to be necessary in this model to avoid extremely high calculated mass transfer rates. The values of T_i, x_i, and y_i were calculated as follows. The equality of mass fluxes in both phases yields

$$\frac{K_l (x_i - x_a)}{K_v (1 - \lambda x_i)} - \frac{(y_a - y_i)}{(1 - \lambda y_i)} = 0 . \tag{5}$$

The interface temperature is a function of both the rate of absorption and the rate of cooling. For typical absorption rate values, the Ackerman Correction (Sherwood et al. 1976) indicates that the distortion of the temperature profile due to mass transfer in the film should be minimal. Andberg (1986) shows that the temperature profile deviates from the corresponding to laminar flow only at the inlet and developing film regions. Therefore, a linear profile inside the film was assumed. The film bulk temperature, T_l, and the interface temperature, T_i, are thus related. The interface temperature is also a function of the vapor temperature and vapor-side heat transfer coefficient. Taking into account the heat lost by convection to the vapor phase, the following equation is obtained:

$$T_i = \frac{(h_v/h_l \; T_v) + T_l}{1 + h_v/h_l} , \tag{6}$$

with

$$h_l = k_l/\delta \ . \tag{7}$$

The liquid side concentration, x_i, is given by the property relation

$$x_i = f(T_i, p) \ . \tag{8}$$

With the interface values x_i, y_i, and T_i given by Equations 5, 6, and 8, and inlet values for film mass flow rate, concentration, and temperature, Equations 1 and 2 can be solved numerically employing a standard Runge-Kutta technique (Thomas 1986). Different values of the vapor and coolant temperature and heat transfer coefficients can be specified, allowing absorber tube performance under different conditions to be studied.

The overall heat transfer coefficient from the falling film to the coolant is given by

$$U = \frac{1}{R\left[\frac{1}{R}\, h_c + \frac{\log R_o/R}{k_w} + \frac{\delta}{2k_l}\right]} \ . \tag{9}$$

The mass transfer coefficients for laminar films were extracted from the penetration theory for this type of flow, namely,

$$K_{\ell} = 2c(Dv/R)^{\frac{1}{2}} \ ; \tag{10}$$

and the correction suggested by Ruckenstein and Berkente (1968) for small Reynolds numbers was applied.

The velocities and film thickness were obtained from the Nusselt solution (Bird et al. 1960), and the thermal conductivity and diffusivity property values were from Int. Critical Tables (1926), corrected for temperature and concentration as per Reid and Sherwood (1966). The values of density were taken from Bogart (1981) and those of viscosity from Pinevich (1948). The limited knowledge of transport properties remains an obstacle to any modeling effort and requires immediate attention on the part of researchers.

EXPERIMENTAL VERIFICATION

The verification of a model such as the present one is challenging. The conditions of the vapor phase in terms of pressure, concentration, temperature, and vapor velocity must be known. Also, the outlet and inlet conditions of the liquid solution, the flow of cooling water, and the outlet and inlet temperatures must all be determined accurately. Experimental conditions must be varied in as wide a range as possible.

The verification presented here is somewhat limited in that it covers a limited range of experimental conditions. An absorber made of 1/2-in (1.27-cm) Schedule 10 pipe with six turns coiled in a 3-1/4-in (8.26-cm) diameter was employed. Ammonia water was fed by drippers, flowing as a falling film on both sides of the coil. Pure ammonia vapor was circulated at low velocities, countercurrent to the falling film. Cooling water was run inside the coil, countercurrent to the falling film.

The temperatures of the cooling water were determined by mercury thermometers with an uncertainty of 0.1 F (0.06°C). The flows were determined with rotameters calibrated to ±2% of reading. The concentrations were determined by means of titrations. As indicated in Table 1, the value of the inlet concentration thus determined showed some variability. On the other hand, the value of the outlet concentration was determined with a small uncertainty.

Two types of tests were run: with cooling water running inside the coil and with no cooling water (also called an adiabatic test). In the first test, the variables of practical importance were the amount of heat dissipated and the ammonia concentration change. The experimental and theoretical values are shown in Table 1. The model predicted both within 10% of the experimental

values. In the second test, the solution outlet temperature was the most important parameter. Again, it was predicted adequately. This indicates only that the model does not overpredict the mass transfer rate. The test with cooling water does indicate that for this range of conditions, the heat load was underpredicted slightly.

It is noteworthy that the mass transfer coefficient was increased over the value from the penetration theory as recommended by Ruckenstein and Berkente (1968). For this correction, the characteristic surface tension was taken as the difference between pure ammonia and pure water and interpolated linearly for the concentration change. The mass transfer coefficient turned out to be 2 to 2.5 times that of the laminar flow theory. The intent of this verification was to provide the author with enough confidence in the model to study different absorber conditions and to produce broad suggestions for improving design. A thorough validation for different operating conditions remains to be done.

RESULTS

Although there is a wide range of conditions at which an absorber can operate, two fairly typical ranges were chosen for analysis. The first is representative of the low concentrations and high temperatures encountered in some advanced cycles (Phillips 1986). The second is representative of the high concentrations and low temperatures common in most cooling machines.

The baseline conditions for the first case are illustrated in Table 2. The tube performance for other conditions was referred to the baseline conditions. The concentration change for other conditions was designated as the most significant parameter and was divided by the concentration change corresponding to the baseline conditions of Table 2. The variable thus obtained is called the mass transfer enhancement ratio. The model was employed to understand how the absorption process is controlled.

The model incorporates a falling film heat transfer coefficient, a coolant heat transfer coefficient, the tube wall thickness and thermal conductivity, the vapor phase heat transfer coefficient, and vapor phase and liquid phase mass transfer coefficients. The falling film flow rate is also a variable. Each of those parameters (the flow rate being an exception) characterizes a transport operation in the falling film absorber. Increasing the heat transfer coefficients is perhaps one of the simplest strategies to increase absorber performance. The results of our analysis showed, however, that when the coolant heat transfer coefficient is on the order of 350 $Btu/hr \cdot ft^2 \cdot F$ (2 $kW/m^2 \cdot K$), only two parameters influence strongly the tube performance: the flow rate and the liquid phase mass transfer coefficient. To show the influence of these parameters, the mass transfer enhancement ratio was plotted vs the ratio of the parameters to the baseline value given in Table 2. The results are shown in Figure 4. As the falling film flow rate decreases, the concentration change increases. This is to be expected because absorption is essentially a surface phenomenon. The flow rate has a strong influence on the film thickness but a small influence on the mass transfer coefficient, which stays nearly constant. Thus, although the absorption rate stays nearly constant, the refrigerant is absorbed by a smaller amount of solution, which increases the concentration change. Usually, decreasing the mass flow rate per unit length calls for longer tubes. Economics, space requirements, and the requirement of uniform wetting impose a lower limit on the flow rate.

The other important parameter is the film mass transfer coefficient. The performance of the tube as the mass transfer coefficient is varied is shown in Figure 4. This plot shows that if one could increase the mass transfer coefficient, the performance of the tube would also increase substantially. A sensitivity analysis of tube performance when doubling each one of the other parameters is shown in Table 3. In sharp contrast to the mass transfer coefficient, the sensitivity of performance for each parameter is very small. Clearly, the mass transfer process in the falling film controls the absorption rate for the conditions considered in this work.

The results for the case of low concentration (Table 2) show that the coolant heat transfer coefficient does not influence the overall process significantly. As the solution temperature comes closer to the saturation temperature, one would expect the coolant heat transfer coefficient to become more significant. This is so, since only by decreasing the solution temperature can the absorption process begin. With a solution temperature of 266 F (130°C) instead of 239 F (115°C), the model shows that doubling the coolant heat transfer coefficient increases absorption by 26%, whereas doubling the film mass transfer coefficient increases absorption by 60%. The relative importance of the coolant heat transfer coefficient increases as the solution approaches saturation conditions. However, the mass transfer operation is still important in controlling the absorption process.

For the conditions of Table 2, then, the key to enhancing the absorption process is to reduce the controlling film mass transfer resistance. Possible routes for enhancement include (1) periodic mixing of the film, (2) surfactant additives to enhance mass transfer, or (3) special surfaces that enhance mixing of the film at the vapor-liquid interface.

The effect of λ on absorber performance at the low concentration conditions is important. If one assumes that water may evaporate from the solution and that it is continuously removed either by condensation in the absorber walls or by subsequent absorption in cooler absorber areas, then the heat dissipated in each tube will decrease as a result of the heat of vaporization of the water. At the conditions of high temperature and low concentration under consideration, the maximum value of λ was assumed equal to 1 plus the relative ammonia-water volatility ratio of approximately 14. For that value of λ, the heat load on the tube decreased by 5%. Thus, if the heat dissipated in the tube were employed elsewhere in the cycle, a degradation of performance would result. Therefore, caution must be exercised to minimize water evaporation and migration from hot to cold areas in the vapor phase.

The second case analyzed here corresponds to typical conditions close to the absorber exit, that is, high concentration and low temperatures. The inlet conditions are shown in Table 2. The assumed conditions are much closer to saturation than those on top of the absorber, yet the trends encountered by the analysis were somewhat similar, as shown by Figure 5. The falling film flow rate and the mass transfer coefficient have a strong influence on the absorption rate. Enhancing the mass transfer process is again critical for improving absorber performance.

When the values of the coefficients in Table 2 were doubled, no significant influence of any coefficient was uncovered. Enhancing any process other than mass transfer will not speed up absorption for the ranges of operating conditions considered in this study. However, the vapor heat transfer coefficient, via its influence in cooling the interface, does seem to influence the absorption process, as shown in Figure 5. Thus, sweeping the surface of the liquid with high-velocity vapor may be important for two reasons: to minimize the effect of noncondensibles on the mass transport process and to keep the interface cool and therefore increase the absorption rate. The volatility ratio of ammonia to water is so high (200 to 300) at low temperatures and high concentrations that the possibility of water evaporating at these conditions is minimal. Thus, λ becomes equal to one and a decrease in the heat dissipated due to water evaporation does not occur.

It must be stressed that the results presented here depend on the conditions of the falling film (i.e., saturated or subcooled) and apply within the ranges of operating conditions considered. As for the reasons that may explain why the mass transport process controls if the cooling water heat transfer coefficient is above 350 $Btu/hr \cdot ft^2 \cdot °F$ (2 $kW/m^2 \cdot K$), the following can be stated.

Any flux, be it energy or mass, is characterized in our analysis as the product of a driving force times a transport coefficient. The flux can change substantially only if the coefficient or the driving force is changed as a consequence of some variable being altered. Focusing on the mass flux, it is clear that the mass transfer coefficient in the liquid phase has a strong influence on the rate of transport (Figures 3 and 4). The driving force for mass transfer is the concentration difference of Equation 2. In the cases analyzed, the concentration difference was not drastically changed when the other parameters were changed, and consequently, it was concluded that the mass transfer controls. The driving force for mass transfer (Equation 2) is a function of the falling film concentration, x_a, and the interface concentration, x_i. The interface concentration, x_i, depends in turn on the interface temperature and on the absorber pressure. The interface temperature is a function of the heat transfer coefficients of the falling film, of the coolant, of the vapor phase, and of the coolant and vapor temperatures. These functional relationships are illustrated in Table 4, where (1) a plus sign associated with the variable indicates that an increase on that variable produces an increase on the dependent variable and (2) a negative sign indicates the opposite dependence. Our model showed that decreasing the cooling water temperature did indeed enhance absorption. However, the pressure, coolant and vapor temperatures, and concentration are normally beyond the control of the designer. Then, as shown in Table 4, only two parameters--the overall heat transfer coefficient and the vapor heat transfer coefficient--will decrease the interface temperature when their values are increased, thereby increasing the driving force for mass transfer. The vapor heat transfer coefficient is a function of the vapor velocity and density, and only when a large volume of vapor is available can the designer optimize the velocity. An upper limit on the velocity is imposed by the flooding velocity in the case of countercurrent flow. Nevertheless, vapor heat transfer coefficients are comparatively low, and their influence on the transport process is relatively small (Figure 5).

The overall heat transfer coefficient depends on the thickness and thermal conductivity of the tube wall, the thermal conductivity and film thickness (for laminar falling films), and the

coolant heat transfer coefficient. The resistance-to-heat transfer across a thin tube metallic wall proved to be negligible in our case because of the high conductivity of the metal. The falling film thickness, calculated using the Nusselt solution, turned out to be small, on the order of 0.012 in. (3×10^{-4} m); and the ratio of film thickness to thermal conductivity was small. Thus, the overall heat transfer coefficient (Equation 9) did not depend strongly on the wall or on the falling film characteristics. From Table 4, the only way to enhance the driving force for mass transfer was to enhance the coolant heat transfer coefficient. This strategy proved ineffective when the coolant heat transfer coefficient was above 350 $Btu/hr \cdot ft^2 \cdot F$ ($2\ kW/m^2 \cdot K$). For those cases, the increase in the mass transfer driving force produced by increasing h_c was not enough to produce large increases in the rate of mass transfer. However, the closer the film conditions were to saturation, the more important the influence of the coolant heat transfer coefficient relative to the influence of the mass transfer coefficient became.

CONCLUSIONS

A complete model of the absorption process for a falling film ammonia-water absorber has been formulated. This model allows the identification of the controlling resistance to the absorption process. The following processes are modeled simultaneously: vapor phase heat and mass transfer, falling film heat and mass transfer, pipe wall heat transfer, and coolant heat transfer. Of all these processes and for the typical operating conditions studied, it was found that the absorption rate is controlled by the mass transfer process in the falling film. Reducing the falling film thickness (i.e., the solution flow rate per unit length) proved to be effective toward increasing concentration changes. Economics, space requirements, and wetting characteristics impose a limit on this. As long as the coolant heat transfer coefficient is above 350 $Btu/hr \cdot ft^2 \cdot F$ ($2\text{-}kW/m^2 \cdot K$), it does not influence the transfer process significantly, except when the solution is saturated. Even then, the mass transfer process still poses a significant resistance. The vapor velocity and the resultant mass and heat transfer coefficients between liquid and vapor must be maximized to increase the absorption rate. All other factors, including the pipe wall conductivity, appeared to have negligible effects within the range of conditions considered in this study.

In the present modeling work, the concentrations at the vapor and liquid side of the interface were decoupled. In physical terms, this decoupling implies the existence of a barrier or resistance to mass transfer at the interface. Clearly, further studies are required to characterize this resistance. However, the existence of this resistance may call for the development of chemical additives to enhance the transfer process across the interface.

The work shows that enhancing absorber performance calls for enhancing mass transfer. Surfactant additives to enhance surface transport or localized cooling of the film (Webb 1978) to enhance circulation may be helpful techniques for this purpose. Configurations other than falling films could also be employed to overcome this limitation (Briggs 1971). At low concentrations of ammonia and at high temperatures, it is possible that water evaporation and migration may decrease the tube heat load. Absorber design must certainly take this possibility into account, if the heat is to be recovered and used elsewhere in the cycle.

NOMENCLATURE

c - molar concentration

D - molecular diffusivity of ammonia in water

f - functional dependence

h - enthalpy, convective heat transfer coefficient

k - thermal conductivity

K - mass transfer coefficient

L - length

m - mass flow rate per unit length, mass flux

M = molecular weight

R = inside pipe radius

T = temperature

U = overall heat transfer coefficient between falling film and coolant

v = falling film average velocity

x = refrigerant mole fraction in liquid phase

y = refrigerant mole fraction in vapor phase

δ = film thickness

ϕ = angular coordinate

λ = ratio of water vapor to ammonia vapor flux plus one

Subscripts

a = ammonia
c = cooling fluid
i = liquid-vapor interface
ℓ = liquid phase, falling film
o = outside pipe radius
w = water, metallic wall
v = vapor phase

REFERENCES

Andberg, J. W. 1986. "Absorption of vapors into liquid films flowing over cooled horizontal tubes." Ph.D. thesis, University of Austin.

Bauerje, S.; Rhodes, E.; and Scott, D. S. 1967. "Mass transfer to falling wavy liquid films at low Reynolds numbers." Int. J. Heat Mass Transfer, Vol. 22, pp. 43-48.

Bird, B.; Stewart, W.; and Lightfoot, E. 1960. Transport Phenomena. New York: John Wiley & Sons.

Bogart, M. 1981. Ammonia absorption refrigeration in industrial process. Houston: Gulf Publishing Company.

Briggs, S. 1971. "Concurrent, crosscurrent, and countercurrent absorption in ammonia-water absorption refrigeration." ASHRAE Trans., Vol. 77, Part 1, pp. 171-175.

Grigoréva, N. I., and Nakoryakov, V. E. 1977. "Exact solution of combined heat and mass-transfer problem during film absorption." J. Eng. Physics, Vol. 33, Part 5, pp. 1349-1353.

Grossman, G. 1982. Simultaneous heat and mass transfer in absorption/desorption of gases in laminar liquid films. ORNL/TM-8366, Oak Ridge National Laboratory.

Higbie, R. 1935. "The rate of absorption of a pure gas into a still liquid during short periods of exposure." Transaction of American Institute of Chemical Eng., Vol. 31, pp. 365-389.

Int. Critical Tables of Numerical Data Physics Chemistry and Technology. 1926. New York: McGraw Hill.

Phillips, B. A. 1986. "A new future for absorption?" ASHRAE J., Vol. 28, No. 11 (Nov.), pp. 38-42.

Pinevich, G. 1948. "Viscosity of water-ammonia solutions and of liquid ammonia." Cholodil. Tekh., Vol. 20, No. 3, p. 3037.

Reid, R. C., and Sherwood, T. K. 1966. The properties of gases and liquids. New York: McGraw Hill.

Ruckenstein, E., and Berkente, C. 1968. "Mass transfer to falling liquid films at low Reynolds numbers." Int. J. Heat Mass Transfer, Vol. 11, pp. 743-753.

Sherwood, T. K.; Pigford, R. L.; and Wilke, C. R. 1976. Mass transfer. New York: McGraw Hill.

Thomas, B. 1986. "The Runge Kutta methods." Byte, J. of Small Systems, Vol. 11, Part 4, pp. 191-210.

Webb, R. 1978. "Apparatus for absorbing a vapor in a liquid and absorption refrigeration system incorporating same." U.S. Patent 4,223,539.

ACKNOWLEDGMENT

The author wishes to acknowledge the advice and insights of Dr. B. A. Phillips. The ammonia-water property algorithms furnished by Phillips Engineering were instrumental in completing the analysis. This research was sponsored by the Office of Buildings and Community Systems, U.S. Department of Energy under contract DE-AC05-84OR21400 with Martin Marietta Energy Systems, Inc.

APPENDIX A

Derivation of Conservation Equations

The control volume of Figure A.1 is considered, with a cylindrical coordinate system of unit vectors $\check{r}$, $\check{\phi}$, and $\check{z}$. Liquid flows in and out of the faces perpendicular to $\check{\phi}$. Vapor mass and heat are exchanged across the top cylindrical surface, perpendicular to $\check{r}$. The cylindrical surface at r = R, perpendicular to $\check{r}$, coincides with the outside tube surface, and only thermal energy flows across this surface.

The equation for mass balance is

$$\int_{\Lambda} \frac{\partial \gamma}{\partial t} \cdot d\Lambda + \int_{S} \gamma(\bar{V}\cdot\check{n})\, dS = 0 \ , \qquad \text{A.1}$$

where the first term indicates integration over the volume, Λ, and the second over the surface, S, of the control volume. In the second term, the dot product of the velocity vector, $\bar{V}$, times the unit vector rounded to the surface, $\check{n}$, is the velocity component rounded to the surface; and γ indicates the fluid density in the control volume.

Under the assumption of steady-state flow, A.1 becomes

$$\int_{S} \gamma\ (\bar{V}\cdot\check{n})\, dS = 0 \ . \qquad \text{A.2}$$

To evaluate A.2, we focus first on the control volume surfaces perpendicular to ϕ. The net mass flow is given by

$$\int_{R}^{R+\delta} \int_{z}^{z+L} \gamma(r,\phi,z)\ \ V_{\phi}(r,\phi,z)\cdot dz\ dr$$

$$- \int_{R}^{R+\delta} \int_{z}^{z+L} \gamma(r,\phi + d\phi,z)\ \ V_{\phi}(r,\phi + d\phi,z)\cdot dz\ dr \ . \qquad \text{A.3}$$

In A.3, $\gamma(r,\phi,z)$ denotes the value of the density at the point defined by r, ϕ, and z. The product $\gamma \cdot V\phi$ is the mass flux, across the surface, with units of $lb/s \cdot ft^2 (kg/s \cdot m^2)$. The mass flow is now denoted by m_{zr}, namely,

$$m_{zr}(r,\phi,z) = \gamma(r,\phi,z)\ V_{\phi}\ (r,\phi,z)\ . \qquad A.4$$

Integration of A.3 over the coordinate r yields the mass flow per unit length of the coordinate z of units lb/s·ft(kg/sm), namely,

$$\int_z^{z+L} m_z(\phi,z)dz - \int_z^{z+L} m_z(\phi + d\phi,\ z)\ dz\ . \qquad A.5$$

The mass flow rate per unit length is denoted by m_l, and assuming the mass flow rate to be independent of the value of z, A.5 becomes

$$m_l\ (\phi)\ L - m_l\ (\phi + d\phi)\ L\ , \qquad A.6$$

which, by approximating m_l by means of a Taylor series and neglecting terms of higher order than one, gives

$$-L\ \frac{dm_l}{d\phi}\ d\phi \qquad A.7$$

as the net flow through the $\breve{\phi}$ faces of the control volume. The units of A.7 are lb/s (kg/s). Vapor (either ammonia or water) can cross the $\breve{r}$ face at $(R + \delta)$. The contribution of this face is

$$\int_{\phi}^{\phi+d\phi} \int_z^{z+L} \left[\gamma_a(\bar{V}_a \cdot \breve{r}) + \gamma_w(\bar{V}_w \cdot \breve{r})\right] dz\ (R + \delta)\ d\phi\ . \qquad A.8$$

It is assumed that the mass fluxes depend only on ϕ. Then, integration over z yields

$$(R + \delta)\ L\int_{\phi}^{\phi+d\phi}\left[\gamma_a(\bar{V}_a \cdot \breve{r}) + \gamma_w(\bar{V}_w \cdot \breve{r})\right]\ d\phi\ . \qquad A.9$$

Denoting with m_a and m_w, the value of the fluxes $[kg/m^2 \cdot s]$ at ϕ, Equation A.9 can be approximated as follows if the fluxes do not vary sharply with ϕ:

$$(R + \delta)\ L\ [m_a\ (\phi) - m_w\ (\phi)]\ . \qquad A.10$$

Adding A.10 and A.7 gives the mass balance

$$\frac{dm_l}{d\phi} = (R + \delta)\ [m_a\ (\phi) - m_w\ (\phi)]$$

with units

$$\left[\frac{dm_l}{d\phi}\right] \rightarrow \left[\frac{kg}{m \cdot s}\right] \quad \left(\frac{lb}{s \cdot ft}\right)$$

$$\left[(R + \delta)\ m_a)\right] \rightarrow \left[m\ \frac{kg}{m^2 \cdot s}\right] \rightarrow \left[\frac{kg}{m \cdot s}\right] \quad \left(\frac{lb}{s \cdot ft}\right)\ .$$

The energy balance over the open control volume of Figure 1 gives

$$\int_\Lambda \frac{\partial}{\partial t} \gamma \left[h + \frac{V^2}{2}\right] d\Lambda + \int_S \gamma \left[h + gH + \frac{V^2}{2}\right] \bar{V}\cdot\breve{r}\, dS$$

$$= -\int_S \bar{q}\cdot\breve{n}\, dS + \int_\Lambda \omega d\Lambda \ , \qquad \text{A.11}$$

where gH is the potential energy of the stream, $\bar{q}\cdot\breve{n}$ denotes the heat flux across the surface, and ω indicates heat generated by sources within volume Λ, such as chemical reactions. Assuming steady state, neglecting the variations of potential and kinetic energy, one gets

$$\int_S \gamma\ (h + \bar{V}\cdot\breve{n})\ dS = -\int_S \bar{q}\cdot\breve{n}\ dS + \int_\Lambda \omega\ d\Lambda\ . \qquad \text{A.12}$$

Although there are no internal heat sources in the falling film (namely, $\omega = 0$), there is a bonding energy among ammonia and water molecules in the liquid state.

This energy is manifested in the form of heat and is sometimes called the heat of solution. In our simple formulation of this problem, the heat of solution is a second-order effect. This can be shown as follows. The thermal energy, M, liberated when dm is mixed isothermally with a solution of enthalpy h(x,t) at concentration x and temperature T is

$$M = dm\ [h(x + dx,T) - h(x,T)]\ , \qquad \text{A.13}$$

which by employing Taylor series development becomes

$$M \approx dm \left[\frac{dh}{dx}\ dx\right]\ ; \qquad \text{A.14}$$

this is a second-order differential and negligible for our purposes.

Equation A.12 becomes

$$\int_S h\ (\gamma\ \bar{V}\cdot\breve{n})dS = -\int_S \bar{q}\cdot\breve{n}\ dS\ . \qquad \text{A.15}$$

The net flow of enthalpy through the control volume faces perpendicular to $\breve{\phi}$ and to $\breve{r}$ is estimated in a similar fashion as for the mass balance. Then, one obtains

$$\int_S h\ (\gamma\ \bar{V}\cdot\breve{n})\ dS$$

$$= \int_R^{R+\delta} \int_z^{z+L} m_{zr}\ h_1\ dz\ dr + \int_\phi^{\phi+d\phi} \int_z^{z+L} (h_a m_a - h_w m_w)\ dz\ (R + \delta)d\phi$$

$$= -L\ \frac{dm_1 h_1}{d\phi}\cdot d\phi + (h_a m_a - h_w m_w)\ L\ (R + \delta)d\phi\ . \qquad \text{A.16}$$

The control volume exchanges heat with the tube wall and with the vapor phase. The heat flux across the tube wall, q_p, in Btu/s·ft^2 (kW/m^2) is

$$q_p = U\ (T_1 - T_c)\ . \qquad \text{A.17}$$

The vapor phase heat flux is

$$q = h_v\ (T_1 - T_v)\ . \qquad \text{A.18}$$

The heat flow is obtained by integration of A.17 and A.18 over the corresponding surface of the control volume:

$$\int_S \bar{q}\cdot\check{n}\, dS = \int_{\phi}^{\phi+d\phi} \int_z^{z+L} U\,(T_1 - T_c)\, d_z\, R\, d\phi$$

$$+ \int_{\phi}^{\phi+d\phi} \int_z^{z+L} U\,(T_1 - T_y) d_z (R + \delta) d\phi$$

$$= U\,(T_1 - T_c)\, R\, L\, d\phi + h(T_c - T_y)\, L\,(R + \delta) d\phi\ . \qquad \text{A.19}$$

Then, combining A.16 and A.19, one gets

$$\frac{dm_1 h}{d\phi} = (R + \delta)\left[h_a m_a - h_w m_w - U\,\frac{R}{R + \delta}\,(T_1 - T_c) + h_y\,(T_1 - T_v)\right]\ . \qquad \text{A.20}$$

The units of Equation A.20 are consistent, as shown below:

$$\left[\frac{dm_1 h}{d\phi}\right] \Rightarrow \left[\frac{kg}{m\cdot s}\cdot\frac{kJ}{kg}\right] \Rightarrow \left[\frac{kW}{m}\right] \quad \left(\frac{Btu}{hr\cdot ft}\right)$$

$$\left[(R + \delta)\, m_a\, h_a\right] \Rightarrow \left[m\cdot\frac{kg}{m^2 s}\cdot\frac{kJ}{kg}\right] \Rightarrow \left[\frac{kW}{m}\right] \quad \left(\frac{Btu}{hr\cdot ft}\right)$$

$$\left[U\, R\,(T_1 - T_c)\right] \Rightarrow \left[\frac{kW}{m^2\,{}^\circ C}\cdot m\cdot {}^\circ C\right] \Rightarrow \left[\frac{kW}{m}\right] \quad \left(\frac{Btu}{hr\cdot ft}\right)$$

$$\left[h\,(R + \delta)(T_1 - T_y)\right] \Rightarrow \left[\frac{kW}{m^2 C}\cdot m\cdot {}^\circ C\right] \Rightarrow \left[\frac{kW}{m}\right] \quad \left(\frac{Btu}{hr\cdot ft}\right)\ .$$

TABLE 1
Comparison between Experimental and Predicted Values

	Experimental values		
	Mean	Standard deviation (%)	Predicted values
Cooling water test*			
Flow	50 lb/h (6.3×10^{-3} kg/s)	2	50 lb/h (6.3×10^{-3} kg/s)+
Concentration in	3.3%	25	3.3%+
Concentration out	17.94%	2.2	18.6%
Heat load	7313 Btu/h (2.14 kW)	5.4	6583 Btu/h (1.93 kW)
Mass absorbed	8.92 lb/h (1.12×10^{-3} kg/s)	--	9.40 lb/h (1.18×10^{-3} kg/s)
Adiabatic Test**			
Inlet temperature	93.2 F (34°C)	0.5	93.2 F (34°C)+
Outlet temperature	151.4 F (66.3°C)	0.4	150.08 F (65.6°C)

*Average of five runs.
**Average of three runs.
+Inlet condition assumed in the model.

TABLE 2
Baseline Conditions for Performance Calculations

	Low concentration, high temperature	High concentration, low temperature
Flow, lb/hr·ft (kg/s·m)	48.4 (0.02)	96.8 (0.04)
Concentration %	0.05	0.45
Temperature, F (°C)	239 (115)	111.2 (44)
Vapor concentration, %	0.90	0.999
Pressure, psia (kPa)	69.8 (481)	69.8 (481)
Coolant temperature, °C	110	38
Film mass transfer coefficient, lb mol/ft²·hr [(kg mol)/m²s]	19.3 (2.62×10^{-2})	10.8 (1.47×10^{-2}
Vapor mass transfer coefficient, lb mol/ft²·hr [(kg mol)/m²s]	73.7 (0.1)	*
Film thermal conductivity, Btu/hr·ft·F (kW/m·K)	3.5×10^{-4} (0.606×10^{-3})	2.70×10^{-4} (0.467×10^{-3})
Coolant heat transfer coefficient, Btu/hr·ft²·F (kW/m²·K)	528 (3)	528 (3)
Vapor heat transfer coefficient, Btu/hr·ft²·F (kW/m²·K)	12.3 (0.07)	17.61 (0.1)

*Pure ammonia was assumed, with the mass transfer coefficient having no meaning.

TABLE 3
Performance increase when parameter value is doubled

Parameter	Increase
Heat transfer coefficient	1.03
Film heat transfer coefficient	1.003
Vapor phase and heat and mass transfer coefficient	1.004

TABLE 4
Functional dependence of some variables associated with mass transfer

Variable	m_a	Δx	x_i	T_i	T_ℓ	U
Depends on						
	K(+)	x(-)	T_i(-)	T_ℓ(+)	h(+)	k_w(+)
	Δx(+)	xi(+)	p(+)	T_v(+)	x*	k_x(+)
				T_c(+)		h_c(+)
				U(-)		
				h_v(-)		

*Depend on concentration range.

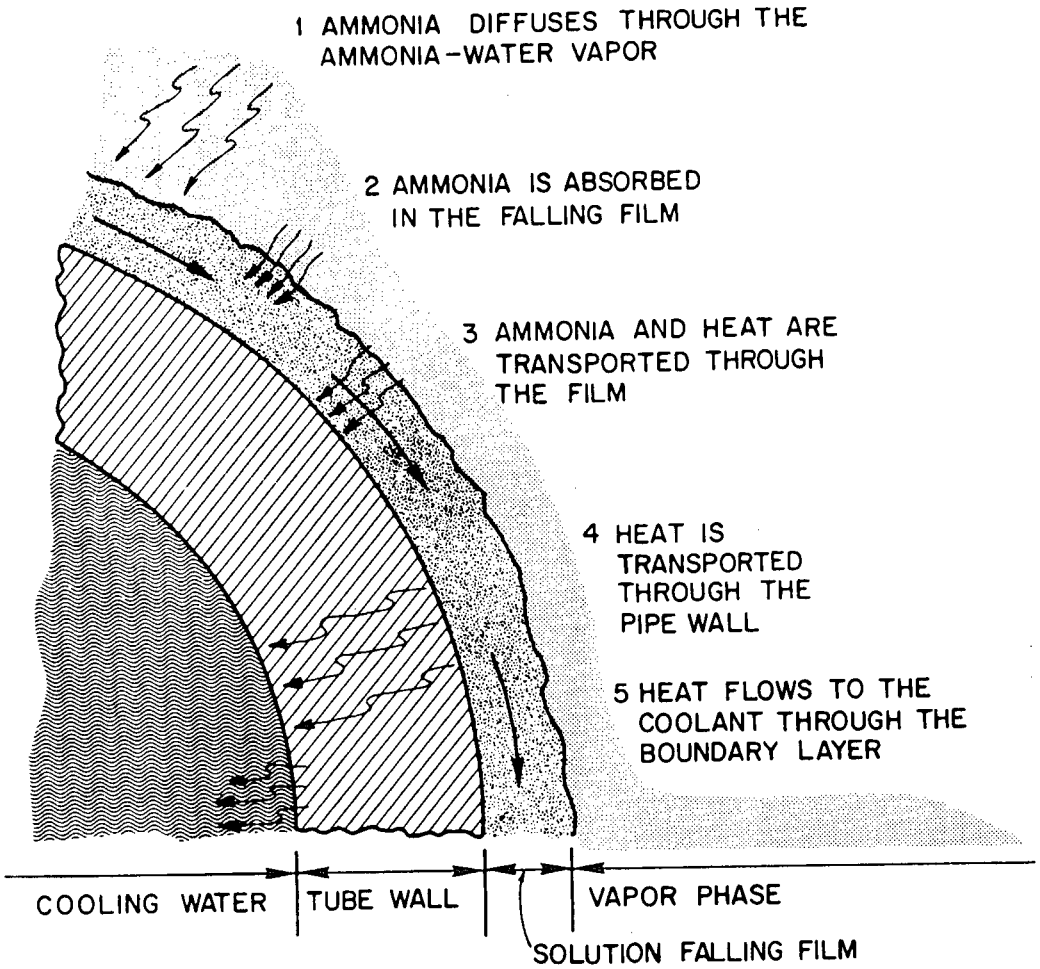

Figure 1 The absorption process in a falling film absorber

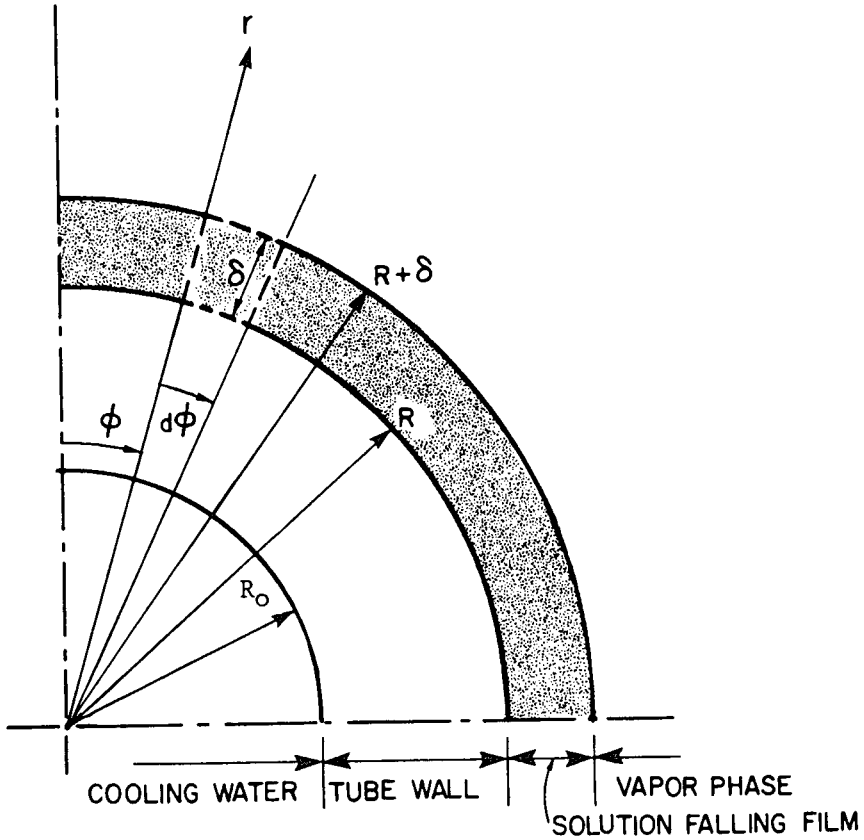

Figure 2 The coordinate system

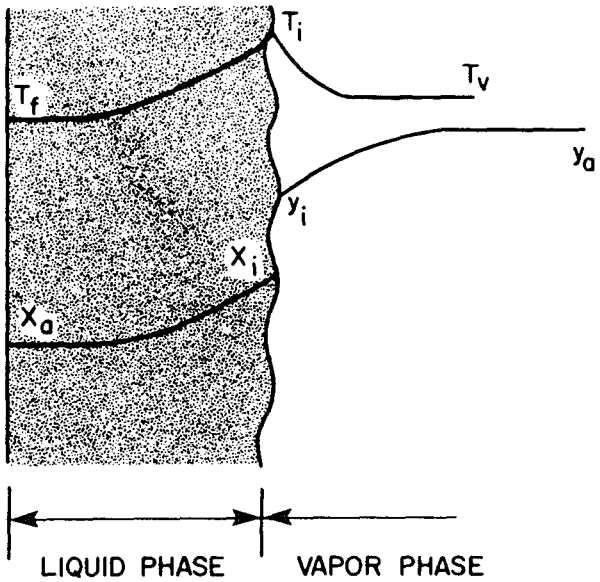

Figure 3 The two-film model

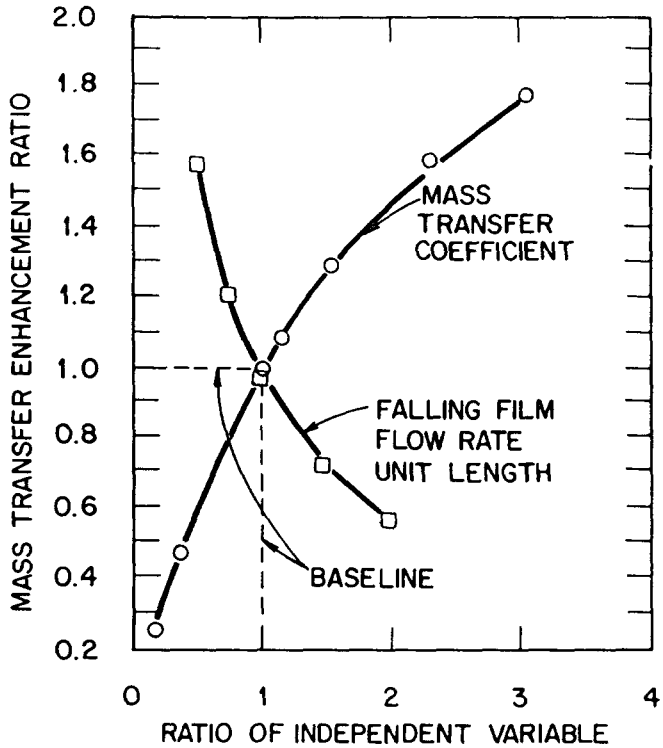

Figure 4 Enhancement ratios for low-concentration, high-temperature case

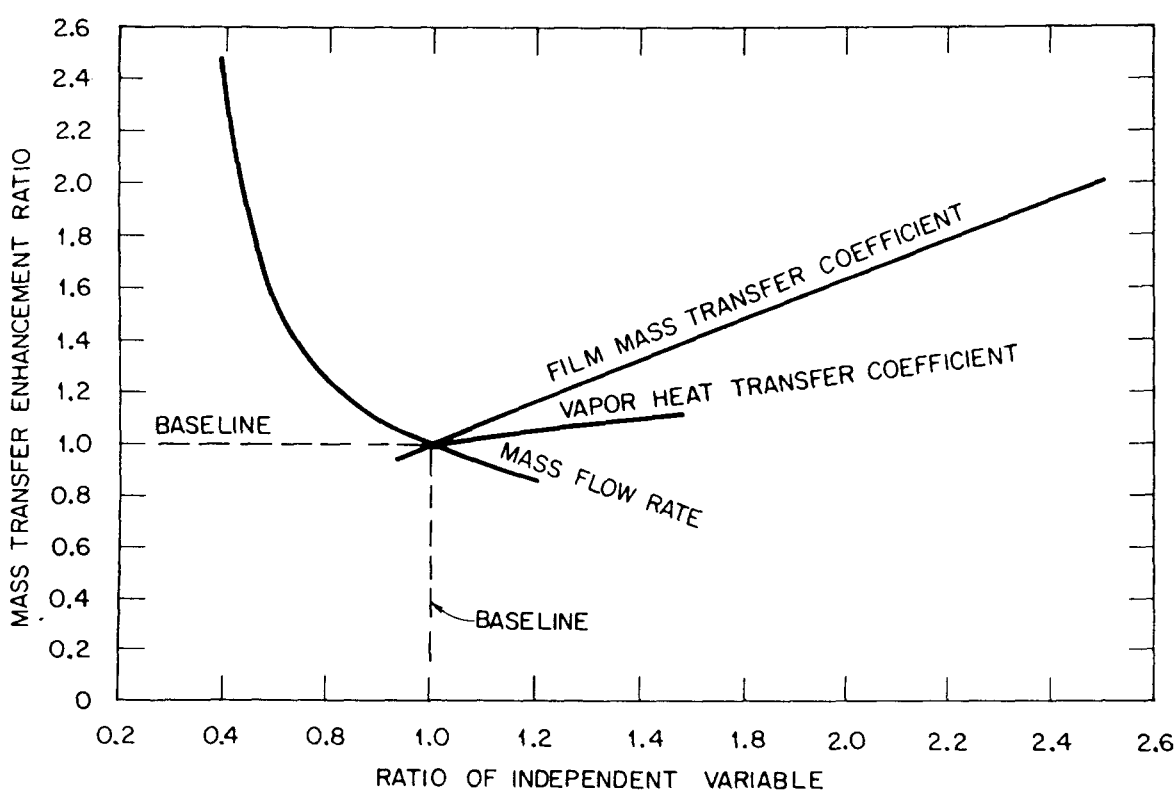

Figure 5 Enhancement ratios for high-concentration, low-temperature case

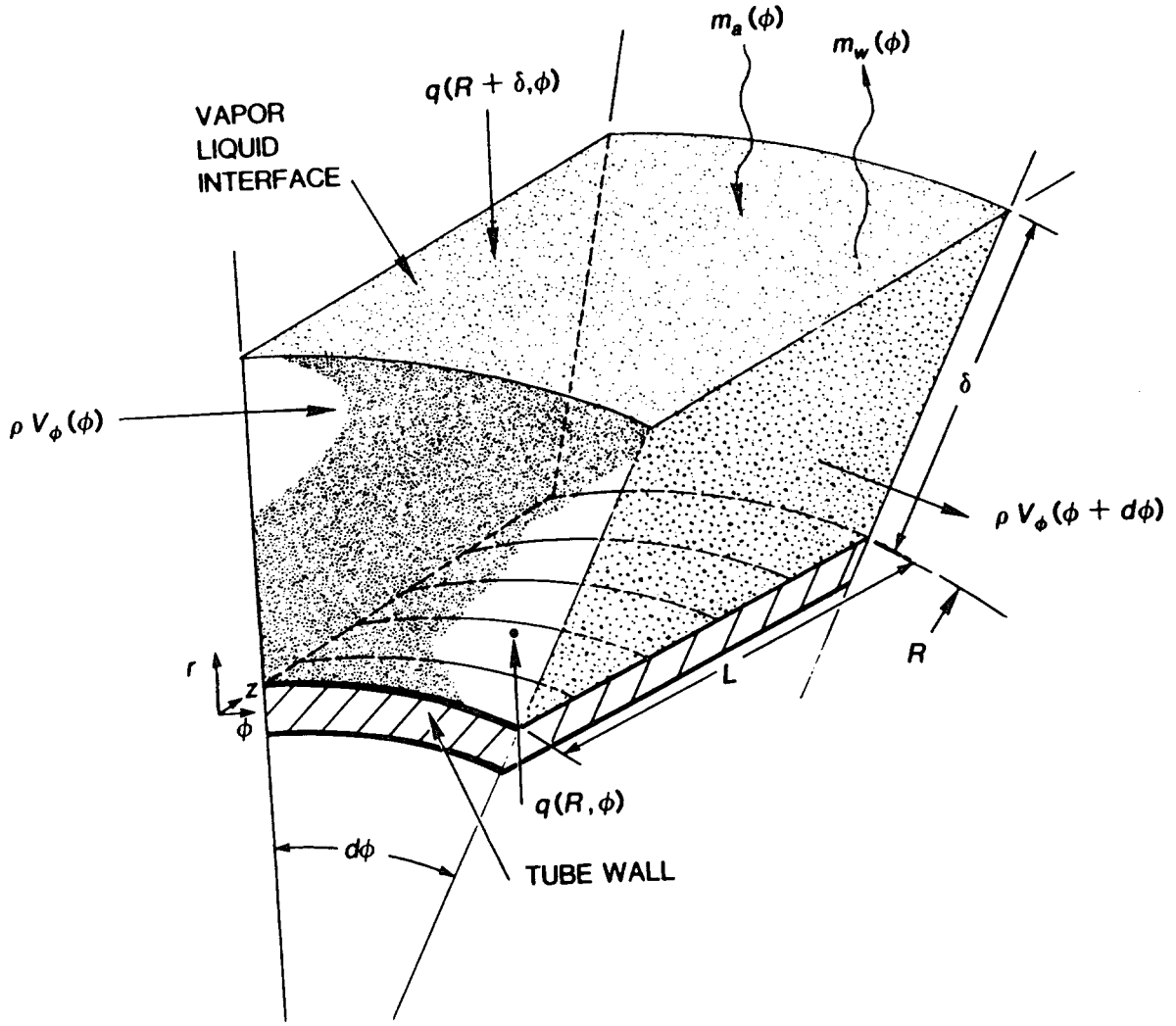

Figure A-1 Schematic of the control volume

Discussion

Z.H. AYUB, E.L. Nickell, Constantine, MI: Was the absorber a regular shell-and-tube type?

H. PEREZ-BLANCO: The experimental verification was conducted at atmospheric pressure in a falling film absorber. The solution flowed on the outside of a vertical coil, formed by a schedule 10 1/2" diameter pipe with 6 turns on a 3 1/4" diameter. The coil was enclosed in a plexiglass tube, and ammonia vapor surrounded the coil.