ORNL/Sub/79-24610/4

ENERGY CONSERVATION

Development of a Residential Gas Fired Absorption Heat Pump

Final Report

Physical and Thermodynamic Properties of R123a/ETFE
System Development and Testing
Economic Analysis

Report Prepared by

Chemical Sector
ALLIED CORPORATION
Columbia Road
Morristown, New Jersey 07960

under
Subcontract 86X-24610C

for

OAK RIDGE NATIONAL LABORATORY
operated by
MARTIN MARIETTA ENERGY SYSTEMS, INC.
for the
U.S. DEPARTMENT OF ENERGY

OFFICE OF BUILDINGS ENERGY
RESEARCH AND DEVELOPMENT

and under
Subcontract 5014-341-0113

for

GAS RESEARCH INSTITUTE

Printed in the United States of America. Available from
National Technical Information Service
U.S. Department of Commerce
5285 Port Royal Road, Springfield, Virginia 22161
NTIS price codes—Printed Copy: A11; Microfiche A01

This report was prepared as an account of work sponsored by an agency of the United States Government. Neither the United States Government nor any agency thereof, nor any of their employees, makes any warranty, express or implied, or assumes any legal liability or responsibility for the accuracy, completeness, or usefulness of any information, apparatus, product, or process disclosed, or represents that its use would not infringe privately owned rights. Reference herein to any specific commercial product, process, or service by trade name, trademark, manufacturer, or otherwise, does not necessarily constitute or imply its endorsement, recommendation, or favoring by the United States Government or any agency thereof. The views and opinions of authors expressed herein do not necessarily state or reflect those of the United States Government or any agency thereof.

ORNL/Sub/79-24610/4

DEVELOPMENT OF A RESIDENTIAL GAS FIRED ABSORPTION HEAT PUMP

FINAL REPORT

PHYSICAL AND THERMODYNAMIC PROPERTIES OF R123A/ETFE SYSTEM DEVELOPMENT AND TESTING ECONOMIC ANALYSIS

August 1985

Report Prepared by

CHEMICAL SECTOR
ALLIED CORPORATION
Morristown, New Jersey 07960

under
Subcontract 86X-24610C

for

OAK RIDGE NATIONAL LABORATORY
Oak Ridge, Tennessee 37831

operated by
MARTIN MARIETTA ENERGY SYSTEMS, INC.
for the
U.S. DEPARTMENT OF ENERGY
under Contract DE-AC05-84OR21400

and under

Subcontract 5014-341-0113

for

GAS RESEARCH INSTITUTE
Chicago, Illinois 60631

50272-101

REPORT DOCUMENTATION PAGE	1. REPORT NO. ORNL/Sub/79-24610/4	2.	3. Recipient's Accession No.

4. Title and Subtitle
Development of a Residential Gas Fired Absorption Heat Pump. Physical and Thermodynamic Properties of R123a/ETFE, System Development and Testing and Economic Analysis

5. Report Date
November, 1983

6.

7. Author(s)
K. Murphy, R. Simon, B. Phillips, J. Marsala, E. Whitlow

8. Performing Organization Rept. No.

9. Performing Organization Name and Address
Allied Corporation
Columbia Rd.
Morristown, NJ 07960

Phillips Engineering Co.
721 Pleasant Ave.
St. Joseph, MI 49085

10. Project/Task/Work Unit No.

11. Contract(C) or Grant(G) No.
(C)
(G) 5014-341-0113 (GRI)
86X-24610C (ORNL)

12. Sponsoring Organization Name and Address
Oak Ridge National Laboratory
Martin Marietta Energy Systems, Inc.
P. O. Box Y
Oak Ridge, TN 37831

Gas Research Institute
8600 W. Bryn Mawr Ave.
Chicago, IL 60631

13. Type of Report & Period Covered

14.

15. Supplementary Notes

16. Abstract (Limit: 200 words)

This is the fifth in a series of reports covering work on the development of a residential sized absorption heat pump using organic type working fluids. This report covers the development work on the R123a/Ethyltetrahydrofurfurylether (ETFE) pair and an economic analysis of the system. Extensive thermodynamic and physical properties of the R123a/ETFE system were developed. Theoretical analysis of the data was made and showed very good performance. Subsequent testings on equipment not fully developed for R123a/ETFE confirmed this very good performance. The economic analysis showed the system competitive in most areas of the U.S. if improved performance goals (COP=1.5) can be met. The most important factors in determining the competitiveness are heating to cooling ratios and the relative cost of gas and electric.

17. Document Analysis a. Descriptors

Absorption, Heat Pump

b. Identifiers/Open-Ended Terms

c. COSATI Field/Group

18. Availability Statement:	19. Security Class (This Report) unclassified	21. No. of Pages
	20. Security Class (This Page) unclassified	22. Price

(See ANSI-Z39.18) See Instructions on Reverse OPTIONAL FORM 272 (4-77) (Formerly NTIS-35) Department of Commerce

GRI DISCLAIMER

LEGAL NOTICE - This report was prepared by Allied Corporation as an account of work partially sponsored by the Gas Research Institute (GRI). Neither, GRI, members of GRI, nor any person acting on behalf of either:

a. Make any warranty or representation, express or implied, with respect to the accuracy, completeness, or usefulness of the information contained in this report, or that the use of any information, apparatus, method, or process disclosed in this report may not infringe privately owned rights; or

b. Assumes any liability with respect to the use of, or for damages resulting from the use of, any information, apparatus, method, or process disclosed in this report.

PREFACE

This report covers work done at Allied Corporation Morristown, NJ and at Phillips Engineering, St. Joseph, Michigan under subcontract No. 86X-24610C to Martin Marietta Energy Systems, Inc. (Oak Ridge National Laboratory) and under subcontract No. 5014-341-0113 to the Gas Research Institute, Chicago, Illinois.

This report was prepared by:

Kevin P. Murphy	Allied Corporation
Robert S. Simon	Allied Corporation
Joseph Marsala	Phillips Engineering
Eugene P. Whitlow	Phillips Engineering
Benjamin A. Phillips	Phillips Engineering

Mr. K. P. Murphy was the Program Manager.

ABSTRACT

This report covers the development work on the R123a/ETFE (ethyltetrahydro furfuryl ether) pair and an economic analysis of the system. Extensive thermodynamic and physical properties of the R123a/ETFE system were developed. Theoretical analysis of the data was made and showed very good performance. Subsequent testings on equipment not fully developed for R123a/ETFE confirmed this very good performance. The economic analysis showed the system competitive in most areas of the U.S. if improved performance goals (COP=1.5) can be met. The most important factors in determining the competitiveness are heating to cooling ratios and the relative cost of gas and electric.

TABLE OF CONTENTS

	PAGE
ABSTRACT	
EXECUTIVE SUMMARY.	E-1
1.0 THERMODYNAMIC AND PHYSICAL PROPERTIES	
Solubility of R123a in ETFE	1-1
Enthalpy of ETFE Liquid	1-1
Heats of Mixing of R123a and ETFE	1-4
Enthalpy of R123a Liquid	1-5
Enthalpy of R123a/ETFE Solutions	1-5
Density of R123a/ETFE	1-7
Appendix A	1-11
2.0 THERMAL STABILITY OF R123a	
Introduction	2-1
Summary	2-1
Conclusions	2-2
Experimental	2-2
Discussion	2-4
3.0 TOXICITY EVALUATION OF R123a	
Introduction	3-1
Summary	3-2
Material and Methods	3-3
Results	3-6
Discussion	3-8
Figure and Tables	3-11
References	3-14
Inhalation Supplement	3-15

TABLE OF CONTENTS (CONT'D)

PAGE

4.0 EXPERIMENTAL TESTING

Status at Beginning of the Program. 4-2
Theoretical Performance 4-7
Testing of R123/ETFE. 4-11
Testing of R123a/ETFE 4-49
Flow Controls 4-56
Conclusions 4-76

5.0 ECONOMIC ANALYSIS

Summary 5-1
Introduction 5-4
General Approach 5-5
Discussion of Results 5-10

TABLE OF FIGURES

		Page
1-1	Solubility of R123a in ETFE	1-2
1-2	Enthalpy Concentration Diagram.	1-6
1-3	Block Diagram of Calorimeter.	1-13
4-1	Experimental Performance of Test Unit No. 3 . . . . . with R-123/ETFE compared to R-133a/ETFE	4-12
4-2	Generator Design 422-1.	4-14
4-3	Generator Design 422-9.	4-17
4-4	Generator Design 422-13	4-18
4-5	Absorber Design 411-19.	4-22
4-6	Test Unit No. 3 First Absorber Modification	4-25
4-7	Test Unit No. 3 Second Absorber Modification	4-30
4-8	Absorber Design 411-25	4-32
4-9	Test Unit No. 3 R-123/ETFE. . . . . Block Diagram with Absorber 411-25.	4-34
4-10	Experimental Performance of Test Unit No. 3 with R-123/ETFE	4-35
4-11	Test Unit No. 3 R-123/ETFE Block Diagram - Updated Components.	4-36
4-12	Experimental Performance of Test Unit No. 3 with R-123/ETFE	4-37
4-13	Liquid Heat Exchanger & Extrusion 621-11-1.	4-39
4-14	Liquid Heat Exchanger Heat Transfer	4-40
4-15	Condenser and Extrusion 431-27.	4-43
4-16	Evaporator/Precooler.	4-46
4-17	Final R-123/ETFE System Configuration	4-47
4-18	Performance - R-123/ETFE, Final System Configuration. .	4-48
4-19	Test Unit No. 3 Performance R-123a/ETFE	4-49
4-20	Final R-123a/ETFE System Configuration.	4-53

		Page
4-21	Test Unit No. 3 Performance R-123a/ETFE.	4-54
4-22	Thermostatic Expansion Valve	4-57
4-23	Effect of Refrigerant R-123 Purity on. . . . . Evaporator Temperature at 40°F	4-59
4-24	Effect of Refrigerant R-123 Purity on Evaporator Temperature at 0°F.	4-60
4-25	Spring Rates for Various Degrees of Superheat TEV.	4-63
4-26	Thermostatic Expansion Valve - Bellows Design.	4-67
4-27	Spring Rates for Various Degrees of Superheat Bellows TEV.	4-68
4-28	Weak Liquid Expansion Valve.	4-71
4-29	Solution Pump Performance.	4-75
5-1	Absorption Heat Pump Est. Cycling Performance.	5-17
5-2	Absorption Heat Pump Performance Specifications.	5-18
5-3	Absorption Heat Pump Specification - Advanced Dev. . . .	5-19
5-4	Absorption Heat Pump Performance	5-20
5-5	New York ALCC vs. Mfg. Cost (1985)	5-43
5-6	New York ALCC vs. Mfg. Cost (1990)	5-44
5-7	Omaha ALCC vs. Mfg. Cost (1985).	5-45
5-8	Omaha ALCC vs. Mfg. Cost (1990).	5-46
5-9	Madison ALCC vs. Mfg. Cost (1985).	5-47
5-10	Madison ALCC vs. Mfg. Cost (1990).	5-48
5-11	Fresno ALCC vs. Mfg. Cost (1985)	5-49
5-12	Fresno ALCC vs. Mfg. Cost (1990).	5-50
5-13	Nashville ALCC vs. Mfg. Cost (1985).	5-51
5-14	Nashville ALCC vs. Mfg. Cost (1990).	5-52
5-15	Fort Worth ALCC vs. Mfg. Cost (1988)	5-53
5-16	Fort Worth ALCC vs. Mfg. Cost (1990)	5-54
5-17	Medford ALCC vs. Mfg. Cost (1985).	5-55
5-18	Medford ALCC vs. Mfg. Cost (1990	5-56

Page

5-19 New York ALCC vs. Mfg. Cost (1985) with D.H.W. 5-57
5-20 Madison ALCC vs. Mfg. Cost (1990) with D.H.W. 5-58
5-21 Omaha ALCC vs. Mfg. Cost (1990) with D.H.W. 5-59
5-22 Nashville ALCC vs. Mfg. Cost (1990) with D.H.W. 5-60
5-23 Omaha ALCC vs. Mfg. Cost (1988) Complete Modulation. . . . 5-61
5-24 Madison ALCC vs. Mfg. Cost (1985) Reduced Supply Air Temp 5-62
5-25 New York ALCC vs. Mfg. Cost (1985) Early Advanced Tech. 5-63
5-26 Omaha ALCC vs. Mfg. Cost (1985) Early Advanced Tech. . . . 5-64
5-27 Madison ALCC vs. Mfg. Cost (1985) Early Advanced Tech. . . 5-65
5-28 Nashville ALCC vs. Mfg. Cost (1985) Early Advanced Tech. . 5-66
5-29 Madison ALCC vs. Mfg. Cost (1985) Increased House Load . . 5-67
5-30 Madison ALCC vs. Mfg. Cost (1990) Increased House Load . . 5-68

NOTE: In Section 4 the text refers to figures by a single number only.

Executive Summary

This report covers the development work in our program related to the R123a/ETFE (ethyltetrahydro furfuryl ether) pair.

The early phases of the development program were done with the R133a/ETFE. Toxicity testing of the R133a showed it to be unsuitable for this use. Evaluation of other refrigerants showed that R123 and R123a appeared suitable. In the early phases of this program R123 was used due to its availability, in the later stages R123a was available and was used. The pair R123a/ETFE is now the absorption pair of choice.

Extensive thermodynamic and physical property data were developed for R123a/ETFE. Based on this data, preliminary cycle calculations were carried out. Table E-1 gives a summary of this data. This performance level compares favorably with any known absorption pairs.

Table E-1

Calculated Performance
R123a/ETFE

Evaporator Temp, °F	36	0
Condenser Temp, °F	120	120
Absorber Out Temp, °F	105	110
Generator Peak Temp, °F	330	340
Heat Input, BTU/hr	54000	54000
Refrig. Effect, BTU/hr	35700	21100
Heat Output, BTU/hr	89700	75100
COP Heating (Thermodynamic)	1.66	1.39

Subsequent testing on the R123 and later on the R123a showed that this level of performance should be possible with these pairs. Table E-2 gives a typical result from the testing program.

Table E-2

R123a/ETFE Test Results

Evaporator Temp., °C	4.4	-6.2
Evaporator Press., kPa	35.9	21.4
Condenser Temp., °C	50.3	49.2
Condenser Press., kPa	207	200
Refrigerant Flow, kg/hr	196	161
Weak Liquid Flow, kg/hr	420	467
Net Heat Input, kW	14.55	14.11
Heat Output, kW	22.5	20.6
COP (Thermodynamic)	1.56	1.46

These results are reported as the thermodynamic COP, that is based on the thermal energy entering the generator. Based on these results, and with further development effort a system should be possible having the actual performance including flue losses as shown in Table E-3.

Table E-3

Performance Specifications

Heating Mode	
Heat Input, kW	17.6
Heat Output, kW	26.4
Water delivery temp., °C	54.4
Water return temp., °C	35
Electrical Power, kW	0.75
COP	1.50
Cooling Mode	
Cooling Capacity, kW	10.6
Chilled water out, °C	7.2
Chilled water return, °C	12.8
COP	0.65

Testing of the R123a/ETFE for stability and toxicity was also carried out in this program. The stability testing showed that while probably not quite as stable as the R133a, the R123a was much superior to the R123. The overall ranking of the refrigerants stability which have been studied in detail with ETFE is;

$$R133a \approx R\text{-}123a > R21 > R123a$$

Because of the excellent results demonstrated by R133a in actual use, the R123a/ETFE pair should be quite acceptable as far as long-term stability.

The testing of toxicity of the R123a centered on its mutagenic behavior as this is the most troublesome area. The test involves the exposure of Diosophila males (fruit flies) to the material and evaluation of any mutations in subsequent generations. The R123a showed no evidence of mutagenicity in this test.

Economic Analysis

This study was an extension of our previous work in this area with the primary objective to identifying under what conditions the absorption heat pump becomes competitive with alternate competitive systems namely, the electric heat pump and a high efficiency gas furnace and electric air conditioner.

Two "technology levels" were evaluated. One being the state of the art in 1985 and the second the state of the art in 1990. Table E-2 summarizes the performance levels projected.

	1985 Technology	1990 Technology
Absorption Heat Pump		
Heating COP	1.25	1.50
Cooling COP	.50	.68
Gas Furnace		
Heating COP	0.81	0.86
Electric Air Conditioner		
EER	6.8	8.8
Electric Heat Pump		
Heating COP	2.75	3.10

The comparisons were made in seven U.S. cities on the basis of Annual Life Cycle Costs (ALCC).

Results of the analysis lead to the following conclusions:

(1) The absorption heat pump is competitive with or superior to the electric heat pump in 4 of 7 cities using 1985 technology and 5 of 7 cities using 1990 technology.

(2) The absorption heat pump is competitive with or superior to the gas furnace/electric AC combination in only 2 of 7 cities using 1985 technology and 6 of 7 cities using 1990 technology.

(3) In only one city examined, New York, is the absorption heat pump competitive with or superior to both competing systems using 1985 technology. Using 1990 technology, the absorption heat pump is also competitive in Madison, Omaha, Nashville, and Fresno.

(4) The two most important factors in determining the competitive standing of the absorption heat pump in a particular market area are the heating to cooling load ratio and the electric to gas price ratio. The two factors must be taken in combination but generally each must have a value of 3 or greater.

(5) Of the eight different scenarios examined as part of the sensitivity analysis, the greatest impact was obtained by adding the domestic hot water heating load to the base load. For this scenario, the average breakeven manufacturing cost increased by 50% over the base case. However, this scenario was only a first approximation of the domestic hot water option and costs not considered here may change its calculated advantage.

(6) Because the addition of hot water heating capability adds a new set of technical and marketing problems, the best method of increasing the potential market areas of the absorption heat pump is to accelerate the

development of the advanced absorption heat pump technology. When the advanced (1990) technology for the absorption heat pump was compared to the 1985 technology of the competing systems, the average breakeven manufacturing cost increased by 45% and five of the seven cities became competitive market areas.

SECTION 1.0

THERMODYNAMIC AND PHYSICAL PROPERTIES OF R123a/ETFE

THERMODYNAMIC AND PHYSICAL PROPERTIES OF R123a/ETFE

INTRODUCTION

The solubility, and thermodynamic properties of the R123a/ETFE System were experimentally determined to give an accurate description of the fluids performance. The solubility measurements were not made as part of this program but are reported here for the sake of completeness:

SOLUBILITY OF R123a in ETFE

The solubility of R123a in ETFE was measured by evaluating the vapor pressure of various concentrations from 0 to 100% refrigerant. The equations representing this data are given in Table 1-1. The plot of this data is shown in Figure 1-1. Later analysis indicated that the correlation equation in Table 1 does not accurately represent the data in certain regions of concentration. Figure 1-1 is therefore, a more reliable general representation of the data.

ENTHALPY OF ETFE LIQUID

The enthalpy of liquid ETFE was previously reported [1]. It can be represented by the equation:

$$H_{ETFE} = \sum_{i=o}^{4} a_i T^i \qquad \text{(EQN-1-2)}$$

Where H = Enthalpy in BTU/Lb.
T = Temperature, °F

$a_0=0$
$a_1=.43334$
$a_2=.0001136$
$a_3=2.6789 \times 10^{-7}$
$a_4=2.2771 \times 10^{-10}$

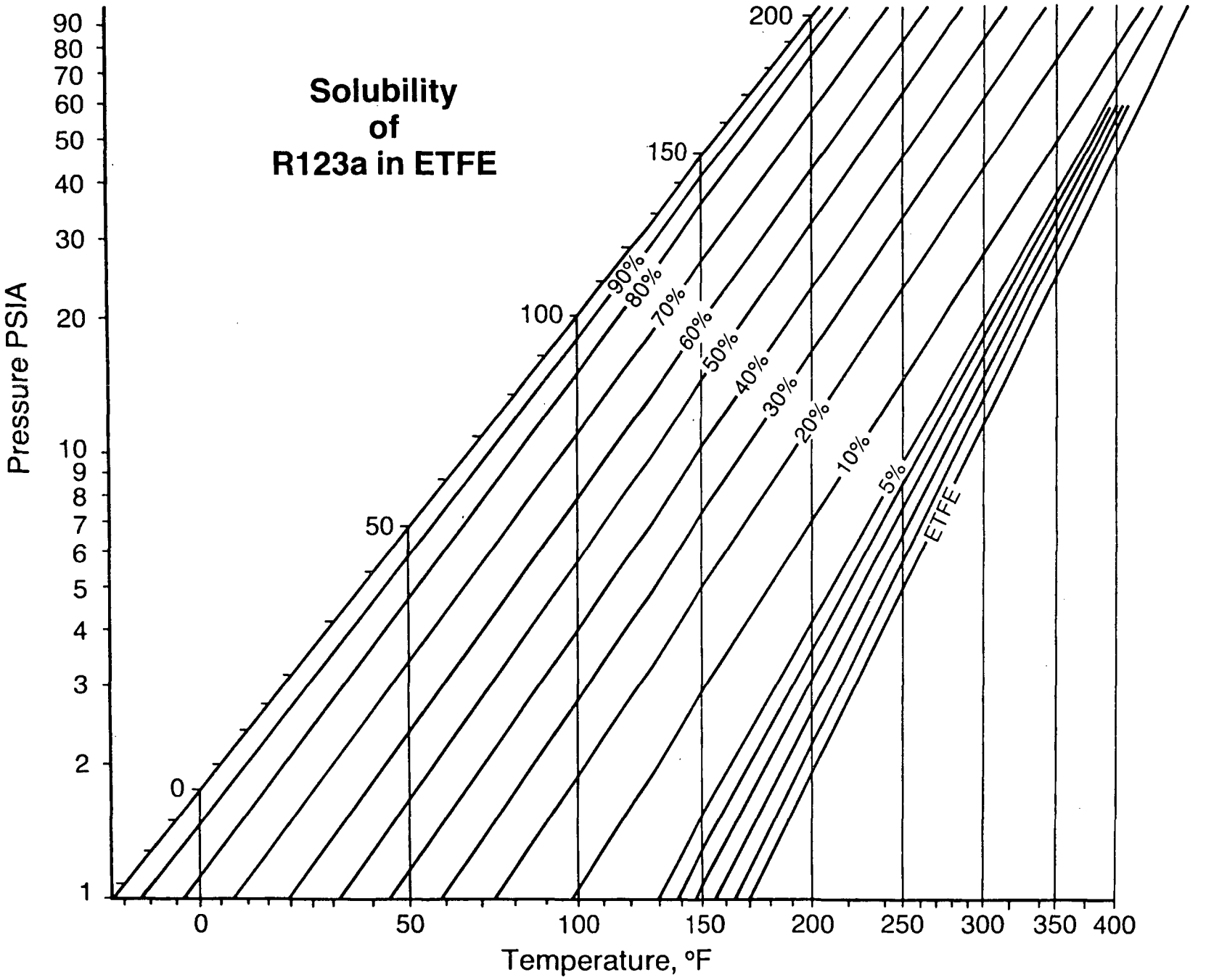
Solubility
of
R123a in ETFE
Pressure PSIA
Temperature, °F
90
80
70
60
50
40
30
20
10
9
8
7
6
5
4
3
2
1
0
50
100
150
200
250
300
350
400
90%
80%
70%
60%
50%
40%
30%
20%
10%
5%
ETFE

FIGURE 1-1

TABLE 1-1

SOLUBILITY EQUATION OF R123a IN ETFE

$$P = 10^{a} + 10^{b}x + 10^{c}x^{2} \qquad \text{(EQN-1-1)}$$

Where: P = pressure, PSIA

X = wt. fraction of R123a in ETFE

$A = a_0 + a_{1/T} = a_{2/T^2} + a_{3/T^3}$

$B = b_0 + b_{1/T} + b_{2/T^2} + b_{3/T^3}$

$C = c_0 + c_{1/T} + c_{2/T^2} + c_{3/T^3}$

Where: T = temperature, °F

The constants are:

$a_0 = +39.06984676$

$a_1 = -72108.6496$

$a_2 = +47017550.35$

$a_3 + -1.0751019 \times 10^{10}$

$b_0 = +24.92098006$

$b_1 = -45917.6272$

$b_2 = +31873461.83$

$b_3 = -7763014710.0$

$c_0 = +6.278597995$

$c_1 = -4392.857225$

$c_2 = +1327670.016$

$c_3 = -247293286.4$

HEATS OF MIXING OF R123a AND ETFE

The accurate experimental determination of the heats of mixing is a difficult task requiring specialized apparatus. The Thermochemical Institute of Brigham Young University had previously made similar measurements and was contracted to measure the heats of mixing of R123a/ETFE. Appendix A gives the details of the experimental work.

An equation representing the heats of mixing for R123a and ETFE are:

$$\Delta H_M = X(1-X) \sum_{i=0}^{2} a_i T^i + \sum_{i=0}^{2} b_i T^i (1-2X) + \sum_{i=0}^{2} c_i T^i \ (1-2X)^2 \left[\frac{.43021}{X(152.94) + (1-X)\ 130.07} \right]$$

(EQN-1-3)

Where X = Mole Fraction R123a

T = Temperature, °F

ΔH_M = Heat of Mixing in BTU/Lb.

Where $a_0 = 20414.1$

$a_1 = 56.8271$

$a_2 = 6.90533 \times 10^{-2}$

$b_0 = 4875.51$

$b_1 = 24.3326$

$b_2 = +5.62466 \times 10^{2}$

$c_0 = 5519.66$

$c_1 = 33.7497$

$c_2 = +4.93957 \times 10^{-2}$

ENTHALPY OF R123a LIQUID

The thermodynamic properties of R123a were computed using existing Allied Corporation computer programs. The enthalpy of the saturated liquid of R123a is given by the equation

$$H_{123a} = \sum_{i=o}^{4} a_i T^i \qquad \text{(EQN-1-4)}$$

Where H = Enthalpy BTU/Lb.
T = Temperature, °F

a_0 = +9.375643016
a_1 = +0.2419319292
a_2 = +2.7184761 X 10^{-4}
a_3 = 2.1147108 X 10^{-6}
a_4 = +4.1263665 X 10^{-9}

ENTHALPY OF R123a/ETFE SOLUTIONS

The enthalpy of solutions of R123a/ETFE is given by the expression:

$$H_S = H_{123a}\,(X_{wt.}) + H_{ETFE}(1-X_{wt.}) + H_{mix} \qquad \text{(EQN-1-5)}$$

H_S = Enthalpy of Solution
X_{wt} = Weight % of R123a in solution
H_{mix} = Heat of Mixing

Figure 2 shows the enthalpy of the solutions over a range of temperatures and compositions.

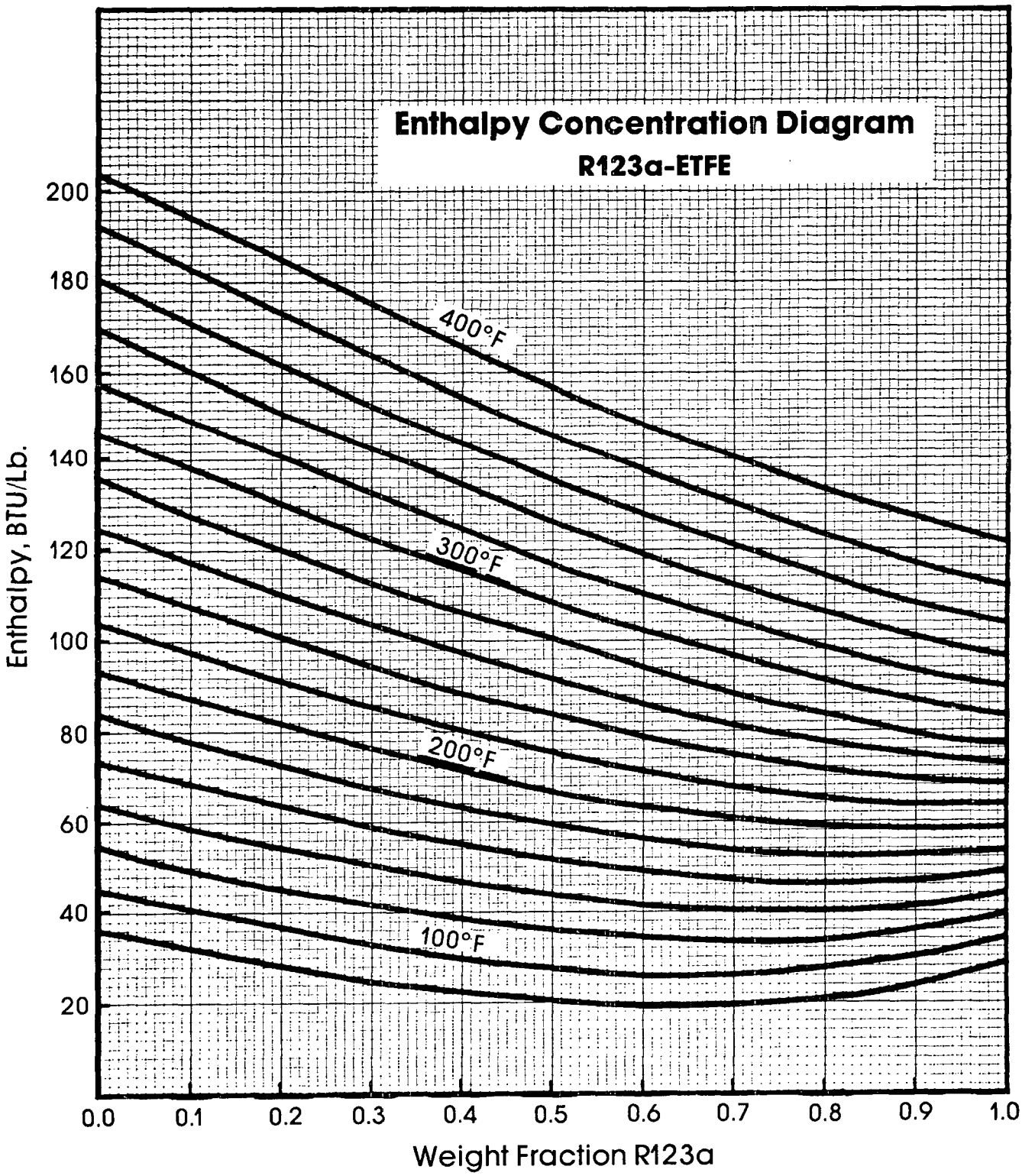
Enthalpy Concentration Diagram
R123a-ETFE
400°F
300°F
200°F
100°F
Enthalpy, BTU/Lb.
200
180
160
140
120
100
80
60
40
20
0.0
0.1
0.2
0.3
0.4
0.5
0.6
0.7
0.8
0.9
1.0
Weight Fraction R123a

FIGURE 1-2

DENSITY OF R123a/ETFE SOLUTIONS

An important operating and design parameter for an absorption heat pump unit is the liquid density of the absorber pair as a function of composition and temperature. This section describes liquid density measurements for R-123a/ETFE as a function of composition and temperature.

Liquid density measurements were made for R123a/ETFE mixtures as a function of composition and temperature. A correlation equation was developed based on that data. Between -50°C to +180°C the accuracy of the liquid density data for R123a/ETFE is $\pm$.004 g/cc.

Ethyl tetrahydrofurfuryl ether (ETFE) was distilled to a purity of 99.5+%. R123a was 99+% pure as available and was used without further purification.

The liquid density was measured by a calibrated sealed pycnometer technique.

Procedure

The pyncometer was cleaned by washing with nitric acid, followed by rinsing with deionized water and with reagent grade acetone. It was dried overnight at 120-150°C. After weighing the pyncometer, the required amount of ETFE was added by means of a syringe and the contents evacuated on a vacuum line. The tube was cooled with liquid nitrogen and the ETFE degassed with two freeze-pump-thaw cycles. The hose connecting the pycnometer was clamped off and the whole assembly removed from the vacuum line. The pyncometer was then weighed and the amount of ETFE was calculated by weight difference. Next, the pyncometer was again connected to the vacuum line where the contents were cooled in liquid nitrogen and subsequently evacuated. The appropriate amount of R123a was added to the system. The pycnometer was sealed off from the line and flame annealed with a gas-oxygen flame while the contents were frozen in liquid nitrogen. The amount of R123a in the pyncometer was determined by weight difference.

The pyncometer was placed in a temperature controlled bath and the density as a function of temperature was determined by measuring the temperature at which the liquid reached the calibrated volume points. This procedure was carried out at 0, 12.720, 13.430, 29.053, 43.904 and 58.468% R123a in ETFE by weight.

Results

The liquid density as a function of composition and temperature is listed in Table 1-2.

The correlation equation for this liquid density data between -50°C to +180°C is:

$$\Delta = \sum_{i=0}^{2} A_i W^i + \sum_{i=0}^{2} B_i W^i T + \sum_{i=0}^{2} C_i W^i T^2 \qquad \text{(EQN 1-6)}$$

T = °C
W = wt.% 123a
Δ = density (g/cc)

$A_0 = +0.9461$
$A_1 = +3.457 \times 10^{-3}$
$A_2 = +2.422 \times 10^{-6}$

$B_0 = -9.308 \times 10^{-4}$
$B_1 = 1.707 \times 10^{-5}$
$B_2 = 1.069 \times 10^{-7}$

$C_0 = 4.038 \times 10^{-7}$
$C_1 = 2.754 \times 10^{-8}$
$C_2 = 1.811 \times 10^{-10}$

TABLE 1-2

Liquid Density of R-123a/ETFE Mixtures

Wt.% R-123a	Temperature (°C)	Density (g - cm^{-3})
.0000	-49.890	.99200
.0000	-19.930	.96470
.0000	.140	.94510
.0000	30.200	.91700
.0000	60.160	.88810
.0000	89.930	.86030
.0000	120.020	.83070
.0000	148.620	.80630
12.7200	-30.310	1.02160
12.7200	-22.670	1.01090
12.7200	9.900	.97770
12.7200	19.480	.96970
12.7200	39.430	.94820
12.7200	58.290	.92830
12.7200	79.020	.90670
12.7200	101.230	.88250
12.7200	132.650	.85130
12.7200	190.030	.78490
12.7200	221.010	.74200
12.7200	221.150	.74110
12.7200	254.110	.69440
13.4300	-19.930	1.02250
13.4300	.140	.99940
13.4300	30.200	.96730
13.4300	60.160	.93580
13.4300	89.930	.90490
13.4300	120.020	.87100
13.4300	148.620	.83880
13.4300	160.750	.82300
13.4300	195.380	.78410
29.0530	-30.310	1.10450
29.0530	-22.670	1.09790
29.0530	9.900	1.05640
29.0530	19.480	1.04290
29.0530	39.430	1.02090
29.0530	58.290	1.00310
29.0530	79.020	.97790
29.0530	101.230	.95070
29.0530	132.650	.91000
29.0530	190.030	.83090
29.0530	221.010	.78020
29.0530	221.150	.78020
29.0530	248.270	.73060
43.9035	-48.160	1.19750
43.9035	-17.820	1.15990
43.9035	9.160	1.12830
43.9035	42.570	1.08720
43.9035	75.620	1.04410
43.9035	106.460	1.00310
43.9035	138.730	.95320
43.9035	176.110	.89820
58.4680	-48.160	1.29730
58.4680	-17.820	1.25730
58.4680	9.160	1.21720
58.4680	42.570	1.17120
58.4680	75.620	1.11650
58.4680	106.460	1.06670
58.4680	138.730	1.01060
58.4680	181.000	.92840

APPENDIX A

Heat of Mixing
of
R123a with ETFE
100, 150, 200 & 300°F
and
300 psia

by
J. J. Christensen
and
R. M. Izatt

Thermochemical Institute
Brigham Young University
Provo, Utah

SUMMARY

The heat of mixing of R123a with ETFE at 100, 150, 200 and 300 °F and 300 psia has been measured over the entire composition range of 0 to 100 mole percent R123a. Two isothermal high pressure flow calorimeters recently developed at the Thermochemical Institute at Brigham Young University were used to make the measurements. The heats of mixing are reported as a function of mole fraction and weight fraction in Tables 2, 3, 4 and 5 and of weight fraction in Figures 2, 3, 4 and 5. The accuracy of the data is estimated to be between 1 and 2%. Equations are given which give the heat of mixing as a function of mole fraction R123a for the four temperatures investigated.

INTRODUCTION

Two isothermal high pressure flow calorimeters capable of measuring heats of mixing over the entire composition range of a mixture were used to make the measurements at 100°, 150°, 200° and 300°F. One unit was used for the 100 and 150°F measurements (low temperature unit) and the other for the 250 and 300°F measurements (high temperature unit).

This data together with the enthalpy of pure R123a and ETFE will be used to develop the enthalpy/concentration data for the system.

APPARATUS AND PROCEDURES

The isothermal high pressure flow calorimeters used in this study have been described previously (1,2). A block diagram of the main components of the calorimeters is given below.

The main components of the calorimeter are the reaction vessel containing the isothermal plate and the equlibration coil, the flow circuit which contains the high pressure pump and the flow controller programmer, the water or air bath, and the isothermal control unit.

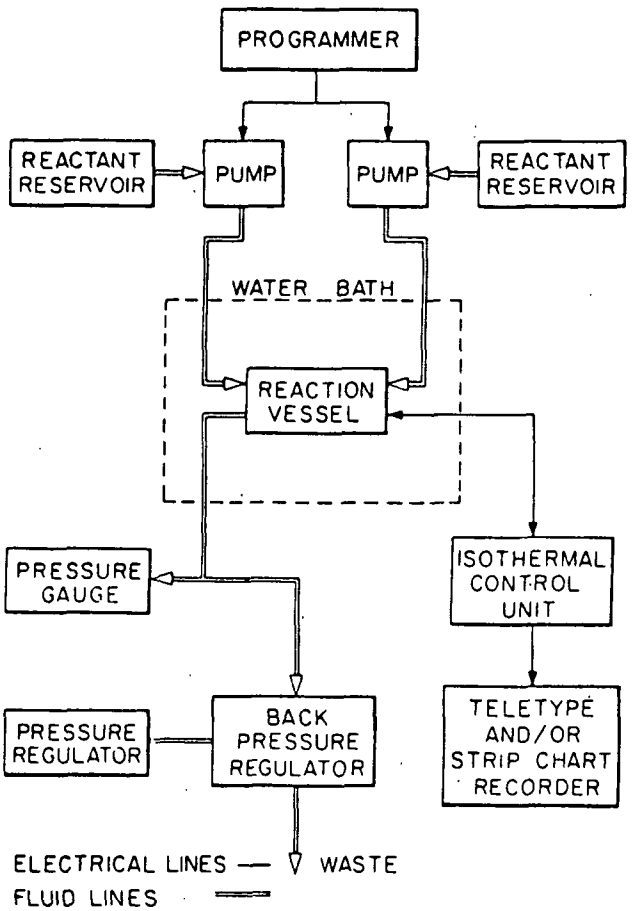

Figure 1-2 Block diagram of main components of isothermal high pressure flow calorimeter.

The reaction vessel consists of a stainless steel container containing the isothermal plate and equilibration coil. The isothermal plate consists of a plate with the equilibration coil attached to the top. Under the plate are a 100- wafer control heater and a Peltier thermoelectric cooler. The cooler is in contact with the bottom of the stainless steel container to facilitate transfer of heat from the cooler to the water bath. Normal operating procedure is to adjust the isothermal control unit to maintain the vessel at the water or air bath temperature. The pumps are charged with the reactants and the flow lines purged by first running one pump, then the

other. A run consists first of running one pump at the total flow rate chosen for the reaction to determine a base line heater pulse rate. Then each pump is run at its respective flow rate and the reaction steady state heater pulse rate determined, followed by the other pump being run at the total flow rate and the base line heater pulse rate being determined again. For example, if flow rates of 0.6 and 0.5 ml/min are chosen for the run, the bas line heater pulse rate would be determined with one of the reactants flowing at 1.1 ml/min (the other reactant would have zero flow). The reaction steady state heater pulse would be determined with the two reactants flowing at 0.6 and 0.5 ml/min, respectively; then the base line heater pulse rate would be redetermined with the other reactant flowing at 1.1 ml/min. The calorimeter is calibrated for a total flow rate both chemically and electrically in separate runs in which a standard heat of mixing such as Hexane-Cyclohexane is carried out in the unit and a known amount of heat added via the calibration heater, respectively. The unit was extensively calibrated both electrically and chemically. Table I gives the results of measuring the heats of mixing, H^M, of a n-hexane with cyclohexane. Results agree very favorably with the best values in the published literature. Accuracy is generally within 1/2% or better.

Materials

The materials were used as received. Analysis indicated the purity of the R123a was 99+% and the ETFE 97.5%.

Table I

Heats of mixing of n-hexane-cyclohexane at 25°C determined with an isothermal calorimeter[a]. Summary of 13 runs and comparison with literature values.

Volume fraction hexane	Mole fraction hexane	Heat of mixing, This study	H^M, J/mole Literature[b]
0.05	0.0417	48.01	48.20
0.10	0.0841	89.31	90.54
0.15	0.1273	124.34	125.26
0.20	0.1712	153.39	153.75
0.25	0.2160	176.90	176.67
0.30	0.2616	195.12	195.08
0.35	0.3080	208.34	207.78
0.40	0.3552	216.75	216.70
0.45	0.4034	220.81	220.64
0.50	0.4525	220.49	220.33
0.55	0.5025	216.03	215.09
0.60	0.5535	207.54	207.39
0.65	0.6055	195.11	194.79
0.70	0.6585	178.81	178.53
0.75	0.7126	158.63	158.65
0.80	0.7678	134.59	135.05
0.85	0.8241	106.69	106.80
0.90	0.8815	74.97	75.30
0.95	0.9401	39.39	38.80

a. Total flow rate constant at 1.34 ml/min. Pressure is 2 atm.

b. K.N. March and R.H. Stokes, J. Chem. Thermodynamics, 1, 223 (1969).

RESULTS

The data obtained from the heat of mixing runs for the system R123a - ETFE at 100, 150, 200 and 300°F and 300 psia are given in Tables 2, 3, 4 and 5 respectively. These data are plotted as H^M vs mole fraction R123a in Figure 2, 3, 4 and 5. An equation (Eq. 1, Table 6) is given which when used with the coefficients reported in Table 6 will reproduce the experimental values with a standard deviation shown in Table 6.

All the H^M values are valid for the materials as received without additional purification or alteration. The accuracy of the data is estimated to be between 1 and 2%. All values of the heat of mixing were exothermic ($-H^M$).

REFERENCES

1. Christensen, J. J. et. al. Rev. Sci. Instrume., 47 730 (1976).

2. Christensen, J. J. et. al. Rev. Sci. Instrume., 52 1226 (1981).

Table 2

Heats of mixing of R123a - ETFE at 100°F and 300 psia

Experimental Data

All Heats are Exothermic

Composition (R123a)		Heat of mixing, $-H^M$	
mole fraction	weight fraction	J/mole	Btu/lb
0.0263	0.0308	272	0.895
0.1033	0.1193	1062	3.45
0.1774	0.2023	1879	6.03
0.2488	0.2803	2465	7.81
0.3176	0.3537	3000	9.40
0.3840	0.4230	3418	10.59
0.4481	0.4884	3734	11.45
0.5100	0.5503	3858	11.71
0.5698	0.6090	3907	11.75
0.6277	0.6647	3788	11.28
0.6837	0.7176	3537	10.44
0.7379	0.7680	3162	9.26
0.7904	0.8160	2645	7.68
0.8412	0.8617	2195	6.32
0.8906	0.9054	1576	4.51
0.9384	0.9471	917	2.60
0.9848	0.9870	232	0.653

Table 3

Heats of Mixing of R123a - ETFE at 150°F and 300 psia

Experimental Data

All Heats are Exothermic

Composition (R123a)		Heat of mixing, $-H^M$	
mole fraction	weight fraction	J/mole	Btu/lb
0.0263	0.0308	237	0.781
0.1033	0.1193	1003	3.26
0.1774	0.2023	1646	5.28
0.2488	0.2803	2187	6.93
0.3176	0.3537	2641	8.27
0.3840	0.4230	2991	9.27
0.4481	0.4884	3255	9.98
0.5100	0.5503	3385	10.27
0.5698	0.6090	3401	10.22
0.6277	0.6647	3300	9.83
0.6837	0.7176	3090	9.12
0.7379	0.7680	2792	8.18
0.7904	0.8160	2382	6.92
0.8412	0.8617	1916	5.52
0.8906	0.9054	1381	3.95
0.9384	0.9471	806	2.29
0.9848	0.9870	197	0.554

Table 4

Heats of mixing of R123a - ETFE at 200°F and 300 psia

Experimental Data

All Heats are Exothermic

Composition (R123a)		Heat of mixing, $-H^M$	
mole fraction	weight fraction	J/mole	Btu/lb
0.0263	0.0308	169	0.556
0.1033	0.1193	978	3.18
0.1895	0.2156	1568	5.02
0.2949	0.3297	2171	6.83
0.3840	0.4230	2617	8.11
0.4481	0.4884	2802	8.59
0.5100	0.5503	2927	8.88
0.5698	0.6090	2949	8.86
0.6277	0.6647	2860	8.52
0.6837	0.7176	2696	7.96
0.7379	0.7680	2420	7.08
0.7904	0.8160	2105	6.11
0.8412	0.8617	1663	4.79
0.8906	0.9054	1209	3.46
0.9384	0.9471	724	2.06
0.9848	0.9870	183	0.515

Table 5

Heats of mixing of R123a - ETFE at 300°F and 300 psia

Experimental Data

All Heats are Exothermic

Composition (R123a)		Heats of Mixing, $-H^M$	
mole fraction	weight fraction	J/mole	Btu/lb
0.1033	0.1193	679	2.20
0.1774	0.2023	1179	3.78
0.2488	0.2803	1573	4.98
0.3176	0.3537	1860	5.83
0.3840	0.4230	2158	6.69
0.4481	0.4884	2351	7.21
0.5100	0.5503	2440	7.41
0.5698	0.6090	2462	7.40
0.6277	0.6647	2433	7.25
0.6837	0.7176	2323	6.86
0.7379	0.7680	2120	6.21
0.7904	0.8160	1901	5.52
0.8412	0.8617	1568	4.52
0.8906	0.9054	1206	3.45
0.9384	0.9471	712	2.02

Table 6

Coefficients and Standard Deviation for Least-Squares Representation of the Heat of Mixing by Equation (1) for R123a - ETFE System

Temperature °F	C_0	C_1	k_1	k_2	σ
100	-15441.4	-0.53712	0.22137	0.21832	
150	-13462.2	-3700.29	0.49899	0.21996	
200	-11700.6	3557.62	-0.11136	0.09125	
300	-9689.62	8292.38	-0.57980	-0.19874	

$$H^M = x(1-x)\left[\sum_{m=0}^{1} C_m (1-2x)^m / \left(1 + \sum_{n=1}^{2} k_n (1-2x)^n\right)\right] \qquad \text{Eq. 1}$$

where x = mole fraction R123a

H^M = heat of mixing in J/mole

Conversion factors

$$(H^E \text{ J/mole}) \left(\frac{0.43021}{x_1(152.944) + x_2(130.071)}\right) = (H^E \text{ Btu/lb})$$

$$(x \text{ mole fraction}) \left(\frac{x_1\ (152.944)}{x_1(152.944) + x_2(130.071)}\right) = (x \text{ wt. fraction})$$

where x_1 = mole fraction R123a

x_2 = mole fraction ETFE

SECTION 2.0

THERMAL STABILITY OF R123a

STABILITY STUDIES

INTRODUCTION

The preceding report[1] details stability studies performed with ETFE/R-133a in the presence of various metals and cements. Since questions had arisen regarding the suitability of R-133a due to toxicity work was refocused on replacing the fluorocarbon portion of the absorption pair with a suitable candidate while leaving the absorber fluid portion, ETFE, intact. Prime candidates were 1,1-dichloro 2,2,2-trifluoroethane (R-123) and 1,2-dichloro 1,2,2-trifluoroethane (R-123a).

This report details stability studies of ETFE/refrigerant absorber pairs comparing these two candidates R-123 and R-123a to dichloro-fluoroethane (R-21) and R-133a, materials which although rejected on other grounds served as benchmark compounds for stability evaluation.

SUMMARY

The stability of ETFE/R123a and ETFE/R-123 (80/20) wt. % were assessed relative to ETFE/R-21 and ETFE/R-133a where the following substances were added to the fluid pairs.

a. aluminum/cold rolled steel couple + 1500 ppm TDP*.
b. aluminum + 1500 and 4500 ppm TDP.
c. cold rolled steel + 1500 ppm TDP.
d. brass + 1500 ppm TDP.
e. aluminum + 1% water + 1500 ppm TDP.

* triisodecylphosphite as stabilizer

CONCLUSIONS

1. Overall ranking of the stability for these fluid pairs is as follows: R-133a ≈ R-123a > R-21 > R-123. The stability of R123a/ETFE far exceeds R-123/ETFE.

2. Cold rolled steel, while apparently not suitable for use in high temperature portions of an absorption heat pump unit employing ETFE/R-123a or ETFE/R-123, may be usable at temperatures which do not exceed 120°F.

3. At 350°F in the presence of aluminum, increasing the level of inhibitor from 1500 ppm to 4500 ppm TDP does not appreciably increase the stability of R-123a/ETFE or R-123/ETFE.

EXPERIMENTAL

Materials: Ethyl tetrahydrofurfuryl ether (ETFE) was distilled to a purity of 99.5+%. R-123 (1,1-dichloro, 2,2,2-trifluoroethane), R-123a (1,2-dichloro 1,2,2-trifluoroethane), R-21 (dichlorofluoroethane) and R-133a (1-chloro 2,2,2-trifluoroethane) were 99+% pure and used without further purification.

Equipment: Testing was performed in 8 inch heavy borosilicate glass stability tubes. A Perkin Elmer 3920 flame ionization detector gas chromatograph coupled to a Sigma 10 data analyzer was used for analysis of ETFE and the fluorocarbons. A 13 foot 1/8" column which was packed with 3% Carbowax 20-M on Chromasorb G-AW-DMCS was utilized in this instrument.

Thermal Stability Testing

Procedure: Metal sample rods were carefully clamped in a padded electric drill and were consecutively polished with medium emery, fine emery, and 500 grit silicone carbide paper. The polished sample was wiped with a wet soft cloth, and rinsed with deionized water followed by reagent grade acetone. The samples were baked overnight at 120°C and were stored under dry nitrogen blanket until use.

Heavy wall Pyrex tubes 3/4" in diameter with nominal pressure rating of 550 psig were sealed at one end, joined to 9 mm tubing, and triple annealed. The sample tube was cleaned by washing with nitric acid, followed by rinsing with deionized water. The tubes were rinsed with reagent grade acetone and dried overnight at 120-150°C. The tubes, while still warm, were flushed with dry nitrogen and sealed with plastic plugs.

The sample rods were inserted into the tubes, sufficient ETFE was added by means of a syringe and the contents evacuated on a vacuum line. The tube was cooled with liquid nitrogen and the ETFE degassed with two freeze-pump-thaw cycles. The appropriate amount of degassed fluorocarbon was then added to the system. The tube was sealed off from the line and flame annealed with a gas-oxygen torch while the contents were frozen with liquid nitrogen. The tubes were placed vertically in capped iron pipes and heated in vented ovens.

Periodically the tubes were viewed and color of solution and condition of rods noted. This visual evaluation was used as previous experience had shown that meaningful chemical analysis of samples was difficult after noticable decompositon.

RESULTS

Unless otherwise specified all tests were run with 1500 ppm of the inhibitor TDP.

A series of tests were performed to determine the stability of the candidate fluids ETFE/R123a and ETFE/R123 relative to ETFE/R-21, a material which possessed good stability characteristics but was rejected due to excessive toxicity. The comparative stability of these absorber pairs at 350°F without the presence of metals is listed in Table 2-1. Stability of these pairs at 350°F in the presence of aluminum is listed in Table 2-2. Table 2-3 shows the stability of these fluids as a function of temperature in the presence of aluminum/cold rolled steel couple.

Another series of tests were performed to determine the stability of the candidate fluids ETFE/R-123a and ETFE/R-123 relative to ETFE/R-21 and another fluid which possessed good stability properties, yet was rejected on toxicity grounds, ETFE/R133a. As a baseline comparison the stability of ETFE alone with and without metals is given in Table 2-4. Stability of these 4 pairs at 350°F without metals, with aluminum, with aluminum + 4500 ppm TDP, with cold rolled steel, with brass and with aluminum + 1% water are listed in Tables 2-5 to 2-10, respectively.

A study showing the stability at 300°F of ETFE/R-123 vs ETFE/R-21 at 1500, 3000 and 4500 ppm TDP are listed in Table 2-11.

DISCUSSION

Results in Table 2-4 show that at 350°F ETFE possesses a high degree of stability by itself, in the presence of aluminum and with cold rolled steel.

It is apparent from Table 2-1 and 2-5 that addition of the refrigerant to ETFE lowers the stability of the system. After 183 days at 350°F ETFE alone has a pale yellow color whereas after this same time period ETFE/123a, ETFE/21 and ETFE/133a are yellow, and ETFE/123 was charred after 140 days.

Comparing Tables 2-1 to 2-2 and Tables 2-5 to 2-6 it is apparent that at 350°F addition of aluminum to the fluid pair has little effect on 123a and 133a but further deteriorates the stability of R-21 and R-123. For example in Table 2-6 after 183 days at 350°F, ETFE/123a and ETFE/133a remain yellow whereas ETFE/21 and ETFE/123 are charred after 101 and 28 days, respectively. As shown in Table 2-6 and 2-7 there is little difference in the stability of these absorber pairs with the presence of 1500 or 4500 ppm of the inhibitor TDP.

At 350°F the presence of cold rolled steel in these 4 fluid pairs greatly deteriorates their stability. Results in Table 2-8 show that ETFE/123a, ETFE/123, ETFE/21, and ETFE/133a were charred after 7, 1, 1 and 56 days, respectively.

Stability after 43 days at 350°F in the presence of aluminum + 1% water is shown in Table 2-9.

Ranking of stability was:

ETFE/123a ETFE/21 ETFE/133a > ETFE/R123.

Stability after 43 days at 350°F in the presence of brass is shown in Table 2-10. Ranking of stability was ETFE/133a slightly better than ETFE/R123a which in turn are very much better than ETFE/123 and ETFE/21. Table 2-3 compares the stability as a function of temperature for ETFE/123a, ETFE/123 and ETFE/21 in the presence of aluminum/cold rolled steel couple. At room temperature and 120°F all three absorption pairs possess a high degree of stability. However at 350°F the 123a, 123 and 21 systems were charred after 17, 1 and 5 days, respectively indicating the following order of stability ETFE/123a > ETFE/21 > ETFE/123.

Table 2-9 shows the effect that lowering the temperature has on the stability of ETFE/123/Al and ETFE/21/Al in the presence of 1500 ppm, 3000 ppm and 4500 ppm TDP. Results show that addition of increased inhibitor does improve the stability of the R-21 system and has little effect on R-123/ETFE. In addition no charring was observed with R-123 in contrast to the 350°F results in Tables 2-6 and 2-7.

Overall the stability of these 4 fluid pairs can be ranked as follows: ETFE/133a ETFE/123a > ETFE/21 > ETFE/123.

COMPARISON OF LAB TESTS TO ACTUAL SERVICE

The use of the R133a/ETFE in actual service with the field trial units offers a comparison of actual service to lab sealed tube tests. While exact quantative comparisons are difficult, it is apparent that the sealed tube tests must be considered very accelerated. The exact reason(s) are not clear but it may be the relatively short residence time in the hot zone (boiler) in an actual unit compared to continuous heating in the sealed tube tests. This is a very important point to keep in mind, however, in using sealed tube test for evaluations of stability.

TABLE I

COMPARATIVE STABILITY OF ETFE/R-123a, ETFE/R-123 and ETFE/R-21 AT 350°F WITHOUT PRESENCE OF METALS
INHIBITOR - 1500 PPM TDP

	OBSERVATIONS								
REFRIGERANT	1 day	5 days	23 days	60 days	98 days	143 days	235 days	264 days	359 days
123a	solution clear	solution clear	solution pale yellow	solution dark yellow	solution dark yellow	solution dark yellow	solution dark yellow	solution dark yellow	solution med. amber
123a	solution clear	solution clear	solution pale yellow	solution dark yellow	solution dark yellow	solution dark yellow	solution dark yellow	solution dark yellow	solution med. amber
123	solution pale yellow	solution dark yellow	solution dark brown	solution dark brown	solution dark brown	solution dark brown	solution dark brown and thickening	solution dark brown and thickening	solution dark brown and thickening
123	solution pale yellow	solution dark yellow	solution dark brown	solution dark brown	solution dark brown	solution dark brown	solution dark brown and thickening	solution dark brown and thickening	solution dark brown and thickening
21	solution clear	solution clear	solution pale yellow	solution dark yellow	solution dark yellow	solution dark yellow	solution dark yellow	solution dark yellow	solution med. amber
21	solution clear	solution clear	solution pale yellow	solution dark yellow	solution dark yellow	solution dark yellow	solution dark yellow	solution dark yellow	solution med. amber

TABLE II

COMPARATIVE STABILITY OF ETFE/R-123a, ETFE/R-123, ETFE/R-21 at 350°F IN THE PRESENCE OF Al INHIBITOR - 1500 PPM TDP

	OBSERVATIONS								
REFRIGERANT	1 day	5 days	34 days	60 days	98 days	143 days	235 days	264 days	359 days
123a	solution clear	solution clear	solution dark yellow	solution dark brown-rod is pitted	solution dark brown- rod pitted	solution dark brown- rod pitted	solution dark brown- rod pitted	solution dark brown- rod pitted	solution dark brown- rod coated
123a	solution clear	solution clear	solution dark yellow	solution dark brown-rod is pitted	solution dark brown- rod pitted	solution dark brown- rod pitted	solution dark brown- rod pitted	solution dark brown- rod pitted	solution dark brown- rod coated
123a	solution clear	solution clear	solution dark yellow	solution dark brown-rod is pitted	solution dark brown- rod pitted	solution dark brown- rod pitted	solution dark brown- rod pitted	solution dark brown- rod pitted	solution dark brown- rod coated
123	solution med. yellow	solution dark brown	solution dark brown rods- film on portion in liquid phase	solution dark brown-ppt. on rods and tube	(1) solution dark brown- liquid thickening ppt on rod & tube	----------	----------	----------	----------
123	solution med. yellow	solution dark brown	"	solution dark brown-ppt. on rods and tube	"	----------	----------	----------	----------
123	solution dark yellow	solution dark brown	"	solution dark brown-ppt. on rods and tube	"	----------	----------	----------	----------
21	solution clear	solution pale yellow	solution brown	solution brown	solution dark brown- rod coated in liquid	solution dark brown and thickening- rod coated in liquid	char- tubes removed from testing		
21	solution clear	solution pale yellow	solution brown	solution brown	solution dark brown- rod coated in liquid	"	char- tubes removed from testing		
21	solution clear	solution med. yellow	solution dark brown	solution dark brown- rod coated	solution dark brown- rod coated in liquid	"	char- tubes removed from testing		

(1) Test terminated after 111 days due to charring of contents.

TABLE III

COMPARATIVE STABILITY OF ETFE/R-123a ETFE/R-123 and ETFE/R-21 IN THE PRESENCE OF ALUMINUM/COLD ROLLED STEEL COUPLE

INHIBITOR - 1500 PPM TDP

REFRIGERANT	TEMPERATURE °C	OBSERVATIONS								
		1 day	5 days	23 days	60 days	98 days	143 days	235 days	264 days	359 days
123a	RT	solution clear	solution clear	solution clear	solution clear	solution clear	solution clear	solution clear	solution clear	solution clear
123a	120(1)	solution clear	solution clear	solution clear	solution clear	solution clear				
123a	120(1)	"	"	"	"	"				
123a	350	very faint yellow	solution brown (2)	---------	---------	---------	---------	---------	---------	---------
123a	350	"	"	---------	---------	---------	---------	---------	---------	---------
123	RT	solution clear	solution clear	solution clear	solution clear	solution clear	solution clear	solution clear	solution clear	solution clear
123	120(1)	solution clear	solution clear	solution clear	solution clear	solution clear				
123	120(1)	"	"	"	"	"				
123	350	char test terminated								
123	350	"								
21	RT	solution clear	solution clear	solution clear	solution clear	solution clear	solution clear	solution clear	solution clear	solution clear
21	120(1)	solution clear	solution clear	solution clear	solution clear	solution clear				
21	120(1)									
21	350	solution dark yellow	char test terminated	---------	---------	---------	---------	---------	---------	---------
21	350	"	"	---------	---------	---------	---------	---------	---------	---------

(1) Tests at 120°F were run for 98 days.
(2) Test terminated after 17 days due to charring of contents.

REFERENCES

(1) Interim Report, Fluid Development, August 1982.

SECTION 3.0

R123a MUTAGENICITY EVALUATION

Evaluation of the Mutagenicity of Dichlorotrifluoroethane (Fluorocarbon 123a) in Drosophila melanogaster

INTRODUCTION

The sex-linked recessive lethal (SLRL) test in Drosophila melanogaster is well established as an efficient assay for mutagenesis in germ line cells. These cells are the reproductive cells for which genetic changes are not expressed in the individual who is exposed but may be expressed in future generations.

Not only does this test use an intact organism, but the organism is eukaryotic. This means that several fundamental properties of Drosophila cells are the same as those of human cells but unlike those of bacterial cells. Although Drosophila shares cellular and physiological characteristics with humans, they are tiny and have a short life cycle. Because of their size, hundreds can occupy a small container and thousands of individual mutation tests require only a modest space. An entire life cycle or generation time takes only ten days at 25°C. Thus, a two-generation test such as the SLRL test lasts only a few months.

In short, the SLRL test in Drosophila offers advantages over both the short-term cellular tests and the expensive and time-consuming mammalian tests.

R123a is to be used as a refrigerant. The principal route of human exposure is anticipated to be through the air. Therefore, it was decided to expose the Drosophila via inhalation. There is published evidence for the mutagenicity of some Genetrons and related fluorinated hydrocarbon gases in the Drosophila SLRL assay (Foltz and Fuerst, 1974).

SUMMARY

R123a failed to induce sex-linked recessive lethal mutations in the reproductive cells of *Drosophila* males at a frequency above that of negative controls. No significant increases were found in any of the stages of the development of reproductive cells. Males were exposed by inhalation to about 30,000 ppm of genetron 123a for two hours. The assay was performed in two runs, with both runs showing a lack of mutagenicity of R123a.

These negative results suggest that R123a does not pose a significant genetic risk in an intact organism.

MATERIALS AND METHODS

The mating scheme for the SLRL test is shown in Figure 1. The Oregon-R and Muller 5 stocks were originally obtained from the Mid-America Drosophila Stock Center and are now maintained in our laboratory. The Oregon-R stock is called "wild-type" to indicate that it is normal or nonmutant. The wild type state of the Oregon-R X chromosome is indicated by "+" (Figure 1). The Muller-5 stock has X chromosomes with two important features: 1) visible mutations such that Muller-5 flies can readily be distinguished from normal, and 2) chromosome changes, or aberrations which prevent recombination. The visible mutations are white-apricot (w^a) which causes a pale eye color, and Bar (B) which causes a very narrow eye. The wild type Oregon-R flies have red, round eyes. The chromosome aberrations block the normal occurrence of recombination or interchange between X chromosomes. This is important because otherwise, a new mutation could be moved to the Muller-5 chromosome and go undetected.

In the parental generation (P1), Oregon-R males were mated individually to virgin Muller-5 females two days following treatment of the males. These males fell into three groups: 1) R123a-treated, 2) negative control or sham-treated, and 3) positive control or vinyl chloride-treated. Each parental male was assigned a number, not only to keep track of which treatment he was given, but also to group the tests as families of specific males.

After three days each male was transferred to new virgin Muller-5 females. This is referred to as Mating 2, to distinguish it from the association of a male with the first group of females (Mating 1). Four days after Mating 2, each male was again transferred to new virgin Muller-5 females (Mating 3).

The progeny of the parental mating are called the F1 generation. All F1 daughters had a "+" X chromosome from their father and a Muller-5 X chromosome from their mother (Figure 1). Their eyes were red and intermediate in size between normal and Bar. The F1 sons all got a Muller-5 X chromosome from their mother and a Y chromosome from their father. Their eyes were Bar and pale, just like any Muller-5 individual. A number of F1 females were mated for each parental male, but each was mated in a separate vial. They were mated to their Muller-5 brothers, at least three males per female. Each parental male, therefore, had a group of F1 tests from Mating 1, a group from Mating 2, and a group from Mating 3, providing that he survived and was fertile in each mating.

The tests were scored by looking at the F2 progeny. The four classes of F2 progeny (Figure 1) were Muller-5 females (pale, Bar eyes), females of the F1 type (red, intermediate eyes), Muller-5 males (pale, Bar eyes), and wild type males (red, round eyes). If all four classes are present, the test was scored as a non-lethal. If the normal class of males was absent, but the other three classes present, the test was scored as a lethal. All lethals were retested by mating 3 or 4 red, intermediate-eyed F2 females, each in a separate vial, to at least three Muller-5 F2 males. Each retest was scored as non-lethal or lethal by the same criterion as before; namely, the presence or absence of normal males.

The rationale for scoring recessive sex-linked lethals by the presence or absence of wild type males is as follows. All cells in the wild type P1 males are potentially exposed to the compound under study. In particular, the test asks whether any reproductive cells have had new recessive lethals induced on the X chromosome. Each F1 female receives one X chromosome from one of her father's sperm (the + chromosome in Figure 1). Those F1 females which receive a new lethal are unaffected since it is recessive. Dominant lethal mutations fail to be detected by this test. An F1 female

which carries a recessive lethal will transmit this X chromosome to half of her sons and and a Muller-5 X chromosome to the other half (Figure 1). Thus, surviving F2 males can only be Muller-5. An F1 female which does not carry a recessive X-linked lethal will produce both classes of F2 males.

The entire experiment was performed in two runs, with the second run serving to confirm the results of the first run and also to give a larger total number of tests.

The numbers of mutations in the Genetron 123a-treated group and the vinyl chloride-treated group were compared to the number in the negative control group using the standard Kastenbaum - Bowman test (Kastenbaum and Bowman, 1970). Any comparisons which were significant at the 0.05 level were also tested at the 0.01 level.

The flies were exposed to the R123a and vinyl chloride in gaseous phase. The methods of inhalation are given in the inhalation section of this report.

RESULTS

The survival and fertility of the treated males are shown in Table 1. Although there was considerable attrition by Mating 3, a sufficient number of treated males remained in all three groups of the first run. In the second run a large number of the vinyl chloride-treated males died in the exposure chamber. This was compounded by a poor batch of medium in Mating 3. Consequently, there was a deficiency of vinyl chloride-treated males and negative control males in Mating 3 of the second run (Table 1). Compensation was made in the next generation by mating more F1 females for each treated male in these groups.

The lethal frequencies for the R123a group were quite consistent, between the two runs, if Mating 3 of the second run is corrected for the occurrence of two clusters (Table 2). The Mating 3 frequencies are then 4/1366=0.29% for the first run and 3/988=0.30% for the second run. These clusters are discussed in detail in the "Discussion" section.

Summed Genetron 123a frequencies for the two runs were compared with negative control summed frequencies for each mating. There are no significant differences at the 0.05 level by the Kastenbaum - Bowman test. Since no single mating shows a significantly altered frequency, the lethals can also be summed over the three matings (Table 2). Total lethal frequency corrected for the clusters (25/7093) also shows no significant difference at the 0.05 level from the control frequency (18/5990).

The R123a frequencies were also compared to those of the accumulated historical negative controls. The summed data for three independent SLRL assays, including the present R123a assay, are 16/7053 (0.23%) for Mating 1, 12/5917 (0.20%) for Mating 2, 12/4053 (0.30%) for Mating 3, and 40/17,023 (0.23%) for the total of all three matings. There are no significant ($p<0.05$) differences between these frequencies and the R123a frequencies from Table 2.

The positive control data show that vinyl chloride is mutagenic (Table 2). Compared to current negative control frequencies, the frequency for Mating 1 summed over the two runs is significant at the $p<0.01$ level and the frequency for Mating 2 summed over the two runs is significant at the $p<0.05$ level. Although the frequency for Mating 3 is elevated, the difference is not significant because of the small numbers.

DISCUSSION

Clusters

A cluster arises from a single mutation in a premeiotic cell which is then multiplied through cell division to produce several lethal-bearing sperm. The purpose of the extensive bookkeeping system which identifies each lethal test as one of a family, stemming from a single-treated parental male, is to identify clusters of lethals. Scoring these as several lethal mutations may give the appearance of a high mutation frequency, resulting in a false positive.

There were no clusters of lethals for the negative control. Twelve treated males produced single lethal tests and three treated males produced two lethal tests each (Table 2). The vinyl chloride group produced 13 singles, 3 doubles, one triple, and one quintuple. The quintuple could represent a cluster, but however one wishes to treat these five lethals, it is clear that vinyl chloride is a mutagen. In Table 2 all 5 lethals are counted in determining frequencies.

The R123a group produced 21 singles, one double, one quadruple, and one quintuple. Since the lethals are expected to follow a Poisson distribution, the quadruple and quintuple are likely to be clusters. All lethals in both sets appeared in the same mating. In Table 2, all of the lethals are enumerated, but the percent lethals for Mating 3 and for the total lethals is calculated by counting these two sets of lethals as clusters and scoring each as only one lethal. In the following section, it will be shown that this is not critical to the conclusions.

Evaluation of R123a Mutagenicity

The reason for transferring each treated male through three matings is to sample cells which were in different stages of spermatogenesis at the time of treatment. It is known that chemical mutagens have variable effects on different cell stages. Those cells which were the most mature at the time of treatment will be the first to be used as sperm in Mating 1. Cells which were in an earlier stage will take longer to mature and will be used as sperm later. The time span of the three matings used in these tests include sperm, spermatids, spermatocytes, and spermatogonia.

The present assays have shown no significant elevation of lethal mutation frequencies induced by Genetron 123a. This is true for each mating and the total lethals, compared to current negative control results and to historical negative control results.

A possible problem area is Mating 3. If the two sets of 4 and 5 lethals were not considered to be clusters, as they were in the previous section, then the lethal frequency for the Genetron 123a group would be 14/2361 (0.59%) instead of 7/2354 (0.30%). However, even this higher frequency is not significantly elevated over current negative control or historical negative control frequencies by the Kastenbaum - Bowman test. Thus, the conclusion that Genetron 123a is nonmutagenic under these test conditions does not rely on correctly classifying these two sets of lethals as clusters or nonclusters.

Lethal Retests

Each lethal was retested by mating three or four F2 females individually and scoring the F3 progeny (see Materials and Methods). In the great majority of cases the retests unambiguously confirmed the existence of a lethal mutation. However, there was one case among the 7100 Genetron 123a

tests and two among the 5990 negative control tests in which either: 1) one or two wild type males appeared in an otherwise apparently lethal test, or 2) the lethal retests disagreed with one or two confirming lethality and one or two showing nonlethality. The former type is called a semi-lethal mutation to indicate that it kills most of the males who carry it but permits an occasional survivor. These survivors are often abnormal. The latter type is called a mosaic lethal mutation to indicate that the F1 female produced eggs of two types; those with the lethal mutation and those without. For the SLRL assay, only unambiguous lethal tests are scored as lethals. Therefore, none of the semi-lethal or mosaic lethal mutations was included in Table 2 or the analysis.

Final Considerations

The concentration of 30,000 ppm of Genetron 123a was selected, based on the range finding data. It is possible that a higher concentration and/or a longer exposure time would have revealed a mutagenic effect of Genetron 123a. However, 30,000 ppm or 3% is already such a high concentration that there appears to be little need for concern about human exposure.

FIGURE 1

MATING SCHEME FOR THE SEX-LINKED RECESSIVE LETHAL TEST

P1	$\frac{+}{}$	male	X	$\frac{w^a\ B}{w^a\ B}$	females
	Oregon-R[1]			Muller-5[2]	
F1	$\frac{+}{w^a\ B}$	female	X	$\frac{w^a\ B}{}$	males
F2	$\frac{w^a\ B}{w^a\ B}$	$\frac{+}{w^a\ B}$		$\frac{w^a\ B}{}$	$\frac{+}{}$
	females	females		males	males

1. Oregon-R is a normal or wild-type stock, as indicated by the symbol "+". The eyes are round and red.

2. Muller-5 is a mutant stock with narrow, pale eyes. The "w^a" represents white-apricot or pale eyes and "B" represents Bar or narrow eyes.

TABLE 1

PARENTAL CROSSES

Treatment	Number of Treated Males	Mating 1 No. Treated Males Mated	Mating 1 No. Treated Males Fertile	Mating 2 No. Treated Males Mated	Mating 2 No. Treated Males Fertile	Mating 3 No. Treated Males Mated	Mating 3 No. Treated Males Fertile
Negative Control							
Expt 1	241	200	179	156	88	68	35
Expt 2	326	207	117	134	69	51	9
Sum	567	407	296	290	157	119	43
Genetron 123a							
Expt 1	409	204	174	180	115	80	46
Expt 2	341	201	147	155	105	55	24
Sum	750	405	321	335	220	135	70
Vinyl Chloride							
Expt 1	172	100	91	88	51	38	16
Expt 2	225	17	14	13	10	5	2
Sum	397	117	105	101	61	43	18
TOTALS	1714	929	722	726	438	297	131

TABLE 2

SUMMARY OF SEX-LINKED RECESSIVE LETHALS

Experiment Number	Number Lethal Tests per Mating[1] 1	2	3	Total Lethal Tests	Total Lethals S[2]	Multiples[3]	Total	% Lethals
Negative Control								
1	1/1203	3/935	5/1183	3321	5	2(2)	9	0.27
2	4/1419	4/1024	1/226	2669	7	1(2)	9	0.34
Sum	5/2622	7/1959	6/1409	5990	12	3(2)	18	0.30
% Lethals	0.19	0.36	0.43					
Genetron 123a								
1	5/1213	3/931	4/1366	3510	12		12	0.34
2	6/1509	4/1086	10/995	3590	9	1(2), 1(4), 1(5)	20	0.36[4]
Sum	11/2722	7/2017	14/2361	7100	21	1(2), 1(4), 1(5)	32	0.35[4]
% Lethals	0.40	0.35	0.30[4]					
Vinyl Chloride								
1	7/513	4/446	4/492	1451	9	3(2)	15	1.03
2	6/481	5/336	1/132	949	4	1(3), 1(5)	12	1.26
Sum	13/994	9/782	5/624	2400	13	3(2), 1(3), 1(5)	27	1.13
% Lethals	1.31	1.15	0.80					

[1] Expressed as number of lethal tests over total tests.
[2] Single lethal in progeny of one male.
[3] More than one lethal in progeny of one male. Number of multiples (size of multiple).
[4] Corrected for two clusters, one of 5 lethals and one of 4 lethals.

REFERENCES

Foltz, V.C. and R. Fuerst, 1974. Mutation Studies with *Drosophila melanogaster* Exposed to Four Fluorinated Hydrocarbon Gases. Environmental Research 7:275-285.

Kastenbaum, M.A. and K.O. Bowman, 1970. Tables for Determining the Statistical Significance of Mutation Frequencies. Mutation Research 9:527-549.

INHALATION SUPPLEMENT

Introduction

In conjunction with the Genetic Toxicology Section, the Inhalation Section initiated a two part mutagenic assay using Genetron 123a. In these assays, *Drosophila melanogaster* males are exposed to the test chemical as a vapor. The grandsons of these males are scored for sex-linked recessive lethal mutations.

SUMMARY: First Run

409 Drosophila males were exposed to a time weighted average concentration of 29,300 ppm of Genetron 123a for two hours and 241 Drosophila males were exposed to a control atmosphere of air for two hours. As a positive control, 172 Drosophila males were exposed to a time weighted average concentration of 9,600 ppm vinyl chloride for 48 hours. Following exposure, all flies were anesthetized, transferred to transport containers and returned to the Genetic Toxicology group for disposition.

SUMMARY: Second Run

The second run was performed just as the first run except for the following: 1) 341, 326, and 225 Drosophila males were exposed in the genetron 123a test group, negative control group, and positive control group, respectively, 2) the time weighted average concentration of Genetron 123a was 27,900 ppm, and the time weighted average concentration of vinyl chloride was 8,600 ppm.

RESULTS

Preliminary range-finding exposures each using approximately 200 Drosophila melanogaster were conducted at concentrations of 10,000, 60,000, and 100,000 ppm of R123a. The nominal exposure concentration of 30,000 ppm was selected as the approximate LC_{50}. 409 flies in the first run and 341 flies in the second run were exposed to the nominal concentration of 30,000 ppm for two hours. The Genetron 123a concentration remained stable throughout the exposures with a time weighted average of 29,300 ppm in the first run and a time weighted average of 27,900 ppm in the second run.

The two positive control exposures to vinyl chloride were performed in a static system. In the first run, using 172 flies, the time weighted average concentration was 9,600 ppm. In the second run, using 225 flies, the time weighted average concentration was 8,600 ppm. Two negative control exposures with 241 and 326 flies using laboratory air were performed. These exposures were done with the same exposure system as the Genetron 123a and positive control groups (Fig. 1).

Five grab samples were taken when venting the vinyl chloride into the hood. These samples were drawn from the hood effluent on the building's roof by filling an evacuated 500 mL gas sampling bottle and then analyzing its contents. No sample showed a concentration of more than 0.3 ppm of vinyl chloride.

SECTION 4.0

EXPERIMENTAL TESTING

AND

SYSTEM DEVELOPMENT

INTRODUCTION

When R-133a was found to be unacceptable for use in absorption heat pumps for residential and some commercial applications due to the potential toxicity problem, a number of alternative refrigerants were considered. These included: R-22, R-152a, R-142b, R-123 and R-123a. Analysis of probable performance and equipment design requirements showed the low pressure refrigerants, R-123 and R-123a, to have the most promise with a minimum of new hardware development. Their low toxicity, and low vapor pressure and high solubility, from which low pumping power would accrue, were key factors in the decision. The high solubility and low vapor pressure were expected to reduce the pumping power required to half that for R-133a/ETFE. Initial stability tests indicated that R-123a was more stable than its isomer R-123, but due to the limited availability of R-123a, much of the testing was done with R-123.

This part of the program was concerned with testing the R-123/ETFE and R-123a/ETFE in an operating unit of two to three ton capacity to qualify the fluids and to develop the component and system designs to the performance expected. The hardware was improved and developed using R-123/ETFE until R-123a became available. Then the fluids were exchanged and final tests were run with that refrigerant.

STATUS AT THE BEGINNING OF THE PROGRAM

Absorption heat pump units using R-133a/ETFE as the working fluids had been developed to the point of meeting the performance objectives, and six early design units were on a field test and life test trial in outdoor installations when the toxicity concerns with R-133a were encountered. ETFE had been shown to have no toxicalogical problems. The development of R-133a/ETFE prototype models, compacted to approximately a one meter cube size, was also underway. The reduction in size was being accomplished by development of extruded aluminum finned shapes to multiply the heat and mass transfer area in an available space.

In the search for replacements for R-133a, the low pressure refrigerants, R-123 and R-123a were found to have important advantages. The toxicalogical tests were favorable and measurements of the vapor pressure of solutions in ETFE showed them to be more soluble than R-133a. The lower vapor pressures would also be helpful in reducing the pumping power, but larger cross sections for vapor flow would be required. Enthalpy data for the individual components was available but data for the solutions was not. There was reason to believe that good estimates could be made on the basis of the R-133a/ETFE enthalpy data. It was concluded that preliminary performance calculations should be made with the available data to provide preliminary heat and mass transfer quantities on which the designs of the heat pump components could be based.

Relative to the R-133a/ETFE test units, an R-123/ETFE unit would require larger cross sections in the precooler, condenser, and some connecting tubes. A pump to operate at the lower flow rates and reduced pressure lifts would also be reuqired. It was not evident whether important modifications might be

required in other components; the vapor cross section areas in the evaporator, absorber and generator appeared to be adequate. Because there was an early breadboard test unit available that had been designed for R-133a/ETFE, it was decided to modify that unit for the low pressure fluids rather than build up a new test unit in its entirety.

OBJECTIVES

OVERALL PROGRAM OBJECTIVES

The objectives included carrying out an analysis of the absorption cycle using the R-123/ETFE and R-123a/ETFE pairs to determine the performance to be expected and the component changes that might be necessary. The solubility data, heat of vaporization and vapor pressures had already established that a smaller pump would be needed and that the condenser and precooler would have to be modified. Modifications were also foreseen for the flow control valves for the refrigerant and weak solution.

A test and development program on the breadboard unit was to be used to develop any components that did not match the needs of the R-123 or R-123a/ETFE pair. The components and the system were to be modified or improved as needed until the performance objectives of the R-133a/ETFE fluids, a COP of 1.25 in a 47°ambient and 1.0 in a 5° ambient, were met. If possible within the time and funding of the project, the program was to be continued to the point of building a unit equivalent to the R-133a/ETFE meter cubed (M^3) unit.

Sub-objectives for the components were as follows.

SOLUTION PUMP

The solution pump was to be modified to reduce its capacity and pressure rise in order to reduce the pumping power requirements and the quantity of vapor being pumped with the solution. The turbine wheel and the raceway design would be modified and developed to meet an objective of 200 watts power input to the motor at a 2.5 gal/min flow at a 30 psi pressure rise.

REFRIGERANT FLOW CONTROL

Due to lower heats of vaporization, the refrigerant flow rate would be 10%-12% higher, and the lower pressures would reduce the pressure differential to about half that of R-133a. Because the operating pressures would be so low, the objective was a valve redesign, with changes in the power element, its charge, the spring forces, and in the valve body and discharge connections. As before, the performance objective was for the refrigerant control valve to maintain refrigerant over all of the evaporator surface under all conditions of operation and outdoor ambient temperatures.

WEAK LIQUID FLOW CONTROL VALVE

Due to higher solubilities, the weak liquid flow rates for R-123/ETFE and R-123a/ETFE would be lower than those of R-133a/ETFE. In addition, the change in flow rates between high and low evaporator temperature conditions would also differ from that of R-133a/ETFE. The objective was to attempt to develop a weak solution flow control valve actuated by low side pressure to match the flows required for best unit performance at all outdoor ambient conditions.

CONDENSER

Due to the lower pressure, and refrigerant flow rate, the vapor volume flowing into and through the condenser would be about double that of R-133a. The pressure drop through the condenser used with R-133a would be excessive with R-123 and R-123a. A new condenser design suited to the lower pressure refrigerants was therefore developed.

PRECOOLER

The volumetric flow of vapor through the precooler is also about double that of R-133a, at a low side pressure of about one-sixth of an atmosphere. Little or no pressure drop can be tolerated. Therefore, a precooler of large diameter with heat transfer surfaces suited to the more rarified vapor was to be developed.

OTHER COMPONENTS

Redesigns of other components were to be undertaken only if found necessary.

THEORETICAL PERFORMANCE ANALYSIS OF R-123 AND R-123A COMPARED TO R-133A

INTRODUCTION

Prior to hardware testing of the low pressure fluids, a theoretical performance analysis of R-123 and R-123a was performed. This analysis was compared to a set of test data for the R-133a/ETFE heat pump system. Since this analysis was performed at the beginning of the program, before detailed fluid property work had been done, only preliminary pressure-temperature-composition and enthalpy data were available for the R-123/ETFE and R-123a/ETFE systems. Consequently, the theoretical performance analysis for these fluids can be thought of as a first estimate of the potential performance in the correct hardware.

PERFORMANCE ANALYSIS

A standard absorber-heat-exchanger cycle was chosen for the performance analysis. Two evaporator temperatures, 40°F and 0°F, were considered. Calculations were made of the heat flows into and out of each component, as well as the thermal duty of the major components. An estimate of the COP for heating and cooling was obtained. These calculations were performed for R-123/ETFE and R-123a/ETFE. Equivalent calculations for R-133a/ETFE and actual results from a test unit with R-133a/ETFE were used as a basis of comparison.

Cycle calculation of this type require a starting point, or set of assumptions, on which the calculation will be based. The following is a list of the major assumptions, or fixed conditions, for the theoretical performance analysis calculations:

TABLE 1

ASSUMED QUANTITIES FOR PERFORMANCE ANALYSIS

1. Evaporating Temperature.
2. Condensing Temperature.
3. Minimum Coolant Temperature.
4. Generator Peak Temperature.
5. Temperature of Liquid Refrigerant Leaving Condenser.
6. Desired Cooling Capacity.
7. Amount of Weak Liquid Cooling Through the Analyzer.
8. Minimum Absorption Temperature.

Starting with these quantities, heat and material balances were performed on a component-by-component basis for R-123, R-123a, and R-133a systems under a variety of conditions. Table 2 contains the results of these calculations. The last column in Table 2 represents an actual run of R-133a/ETFE in a test unit, at conditions close to those assumed, for comparison with the calculated performance of the same pair. As can be seen, there is fairly good agreement between the actual data taken from the test unit and the R-133a theoretical calculation. Based on that agreement the calculated results for R-123 and R-123a can be expected to also be close to the actual performance in the proper hardware. Further inspection of Table 2 shows that the performance of R-123 and R-123a at a 40°F evaporator should be at least as good or even better than that of R-133a with ETFE. The results at a 0°F evaporator are also very good, with the theoretical results for R-123 and R-123a exceeding the measured state-of-the-art performance of R-133a in hardware. Based on these calculations, it was decided that rather than build a new test unit, a unit built for R-133a/ETFE should be modified to run with R-123/ETFE. As soon as R-123a became available, the test unit would be recharged to run the R-123a/ETFE pair.

TABLE 2 THEORETICAL PERFORMANCE ANALYSIS OF LOW PRESSURE REFRIGERANTS

		R123				R123a				R133a Calc	R133a Test Unit 3 Run 3
CONDITIONS	Number	1	2	3	4	5	6	7	8	9	---
	T Evap, °F	40	40	0	0	40	40	40	0	40	42.1
	T Cond, °F	120	120	120	120	120	120	120	120	120	118
	T Coolant, °F	95	95	95	95	95	95	95	95	95	95.1
	T Abs, °F	105	105	110	105	110	110	105	105	110	105.5
	T Refrig from Cond, °F	110	110	112	110	112	112	110	110	112	111
	T Gen, °F	350	302	350	350	300	300	300	350	350	330
	Cooling Cap, Btuh	36000	36000	18000	18000	36000	36000	36000	18000	36000	33524
	Cooling through Analyzer, °F	100	100	75	100	100	100	100	100	100	90.5
SOLN COMP	X Weak, Wt. Fraction	.03	.15	.03	.03	.14	.14	.14	.0317	.075	.0951
	X Rich, Wt. Fraction	.50	.50	.26	.279	.47	.47	.50	.2743	.35	.3880
	RP, lbs Weak/lbs Ref.	1.0638	1.4286	3.2174	2.8956	1.606	1.606	1.389	2.991	2.3636	2.089
SOLN FLOW	Heat of Vaporization, Btu/lb	65	65	65	65	65	65	66	68	74.77	74
	Ref. Flow, lb/hr	554	554	277	277	554	554	546	265	482	454
	Weak Flow, lb/hr	590	792	891	802	890	890	758	793	1138	955
	Rich Flow, lb/hr	1144	1346	1168	1079	1444	1444	1304	1058	1620	1409
EVAP	Q into Evap in Ref, Btuh	18891	18891	9612	9446	19340	19340	18788	9119	20382	18804
	Q Load, Btuh	36000	36000	18000	18000	36000	36000	36000	18000	36000	33524
	Q to Absorber, Btuh	54891	54891	27612	27446	55340	55340	54788	27119	56382	52329
ABSORBER	Q Load from Evap, Btuh	54891	54891	27612	27446	55340	55340	54788	27119	56382	52934
	Q into Abs. in Weak, Btuh	50687	61784	76546	68900	69990	67899	57828	66081	96184	78940
	Q from Abs. in Rich, Btuh	62096	73061	73093	68829	77037	77037	68251	65427	105235	90627
	Q into Coolant, Btuh	43482	43614	31065	27517	48293	46202	44365	27773	47331	38680
LHE	Q given up by Weak, Btuh	17942	4491	38830	24389	4218	6309	5374	26050	34299	23244
	Q in entering Rich, Btuh	66569	78324	78256	73577	82741	82741	73324	70071	112331	96714
	Q in leaving Rich, Btuh	84511	82815	117086	97966	86959	89050	78698	96121	146630	119958
GENERATOR	Q to Condenser, Btuh	63211	63211	32575	31606	60312	60312	63012	30141	63508	63156
	Q to Coolant, Btuh	44320	44320	22963	22160	43672	43672	44224	9119	43126	44279
	Q to Reflux, Btuh	3000	3000	3000	3000	3000	3000	3000	21022	3000	2799
	Q to Rectifier, Btuh	4473	5263	5163	4748	5704	5704	5073	4645	7096	6087
	Q to Weak, Btuh	68629	66275	115376	93289	74208	74208	63202	92131	130483	103341
	Q into Gen. in Feed, Btuh	84511	82815	117086	97966	86959	89050	78698	96121	146630	119958
	Q from Burner, Btuh	54802	54934	39028	34677	58965	56874	55589	33795	57457	55425
	Input, 75% Efficiency, Btuh	73069	73245	52037	46236	78620	75832	74119	45061	76609	71819
	Total Heat Out	90802	90934	57028	52677	94965	92874	91589	51795	93457	85758
	COP, Cooling	0.493	0.492	0.346	0.389	0.458	0.475	0.486	0.399	0.470	0.467
	COP, Heating	1.243	1.242	1.096	1.139	1.208	1.225	1.236	1.149	1.220	1.20
	Cooling Cap-based 72000 Btuh Input	35473	35389	24905	28030	32969	34181	34971	28761	33834	33608
	Heating Cap-based 72000 Btuh Input	89474	89424	78905	82030	86969	88181	88971	82760	87834	85974
	LHE Duty, Btuh	17942	4491	38830	24389	4218	6309	5374	26050	34299	23244
	AHE Duty, Btuh	30510	35898	30216	32294	33602	33602	32248	29412	41504	38790
	Analyzer Duty, Btuh	32185	39640	36870	43749	44527	44527	37922	42759	63421	47101

NOTATION:

T = Temperature
X = Liquid Composition
RP = Relative Pumping
Q = Heat Quantity
COP = Coefficient of Performance
LHE = Liquid Heat Exchanger
AHE = Absorber Heat Exchanger

TEST UNIT DEVELOPMENT WITH R-123/ETFE

INTRODUCTION

Since the R-123/ETFE fluid pair was expected to be similar to R-133a/ETFE except for the operating pressures and concentrations, and an early test unit built for R-133a/ETFE was available, it was decided to modify that unit for the R-123/ETFE testing. This test unit had undergone preliminary testing with R-133a/ETFE, but no component development or updating had been done. Consequently, the unit was not a state-of-the-art R-133a unit.

Several component modifications had to be made before a low pressure refrigerant could be used in the test unit. The precooler cross-section was enlarged to accommodate the large increase in vapor volume. In the condenser the flow passages for the condensing vapor and the coolant stream were reversed in order to increase the cross sectional area on the vapor side. The cooling water then passed through what once was the vapor passage, and the vapor flowed through what had been the water passage. Although the pressure drop across the water side was increased, the vapor side received the extra cross sectional area required. The solution pump was replaced with one of lower capacity in order to better match the lower flow rates of the R-123/ETFE system. The generator reflux section was increased in size in order to assure sufficient vapor purity for efficient operation. In addition to these hardware changes, the system was thoroughly drained and flushed with ETFE in order to remove all traces of R-133a before charging the unit with fresh ETFE and R-123.

PRELIMINARY PERFORMANCE COMPARISON OF R-123/ETFE WITH R-133A/ETFE

The test unit was designated Test Unit 3. Only a limited amount of R-133a/ETFE performance data had been obtained on it, and that data was not up to R-133a/ETFE performance levels in other test units, so it was of limited value in evaluating the potential of the R-123/ETFE working fluid combination.

The first tests of R-123/ETFE in Test Unit 3 were at reduced inputs and somewhat low peak boiler temperatures. In Figure 1, these first tests are compared to the results with R-133a/ETFE. R-133a/ETFE has performed to the "Objective" line in other units, but had operated only to the circled points in this unit. The inputs for those R-133a/ETFE points varied from 60,000 Btuh to 72,000 Btuh, while the inputs for the R-123/ETFE tests were all about 50,000 Btuh. The test results of Figure 1 thus indicated a potential for the absorption pair R-123/ETFE to perform as well as R-133a/ETFE, and possibly better with optimized hardware.

The intent of the low pressure refrigerant program was to assemble hardware closely approaching that of the M3 R-133a/ETFE units. A component-by-component hardware analysis and modification was therefore begun on the basis of the results plotted in Figure 1.

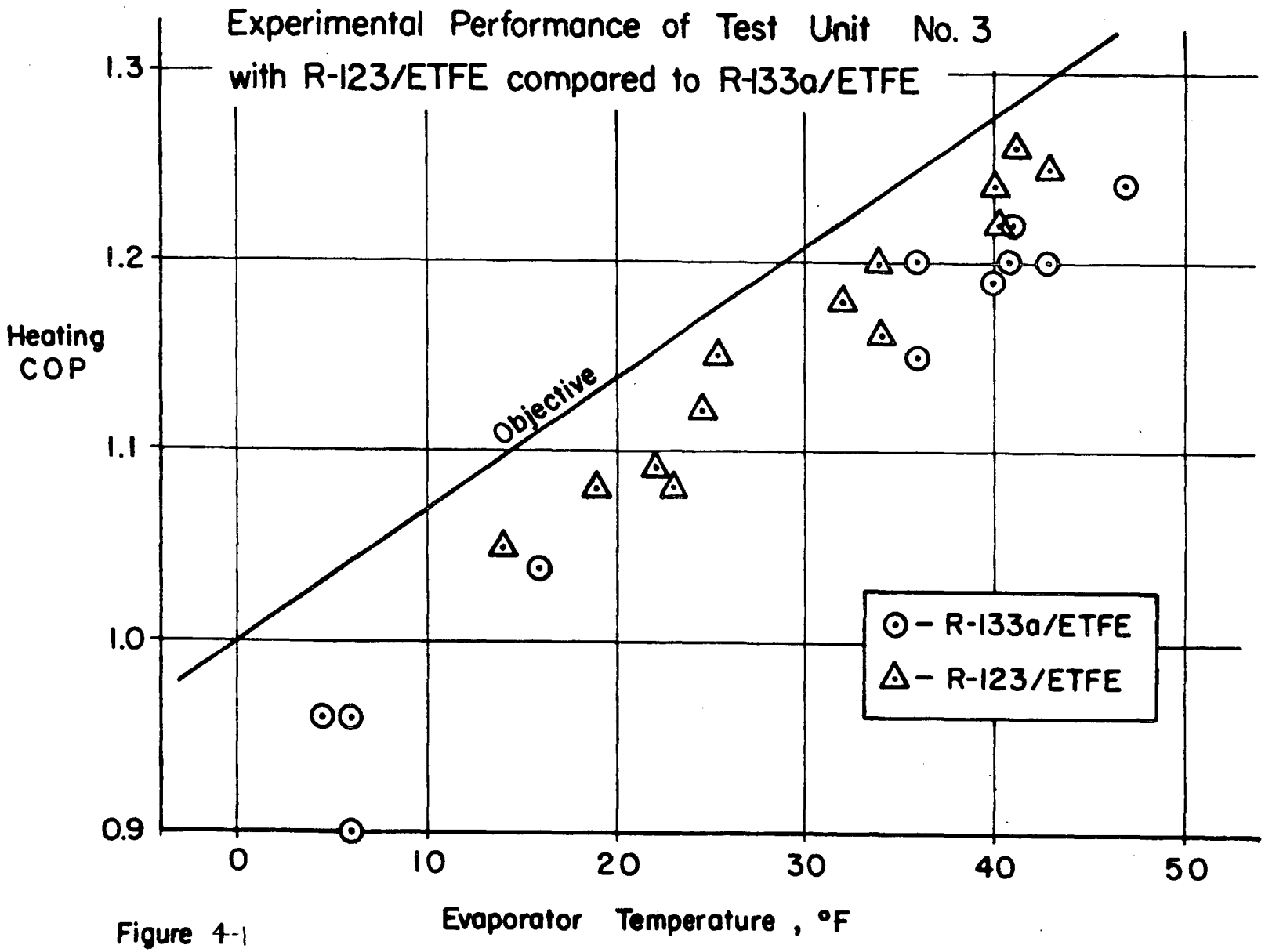
Experimental Performance of Test Unit No. 3
with R-123/ETFE compared to R-133a/ETFE
Heating COP
1.3
1.2
1.1
1.0
0.9
0
10
20
30
40
50
Evaporator Temperature , °F
Objective
⊙ – R-133a/ETFE
△ – R-123/ETFE

Figure 4-1

GENERATOR DEVELOPMENT

The most critical components affecting the performance of the sealed system are the generator and absorber. Consequently, these require the most development effort. The generator must have enough heat and mass transfer surfaces to provide refrigerant vapor at the required quantity and purity to the condenser. It must also remove sensible heat from the weak liquid in the analyzer coil and equilibrate the liquid and vapor streams below the feed point. Due to the increased vapor volume to be handled with low pressure refrigerants and the 40-inch overall height limitation, several generator concepts were tried with varying degrees of success.

The generator design used on the preliminary tests of Figure 1 was generator design 422-1. This generator was the same design that was used in the R-133a/ETFE field trial; it is a "tall" design utilizing only slightly enhanced heat and mass transfer surfaces. Figure 2 shows this generator design. This particular generator, having been used with the R-133a/ETFE fluid system, served for the overall performance comparisons of the two refrigerants as described in the previous section. Modifications were made to the rectifier and reflux sections of the generator for use with R-123. Testing with that modified generator was carried out while other generator concepts were being considered for use with R-123/ETFE, concepts which would meet the 40-inch overall height limitation.

Since the heat inputs to the generator in the R-133a/ETFE tests had varied so widely, a basis of comparison of generator operation was set up for the preliminary R-123/ETFE tests reported in Figure 1. The loads for the analyzer, rectifier and reflux were all normalized with respect to the input; that is, they were all expressed as fractions of the input. These values were then

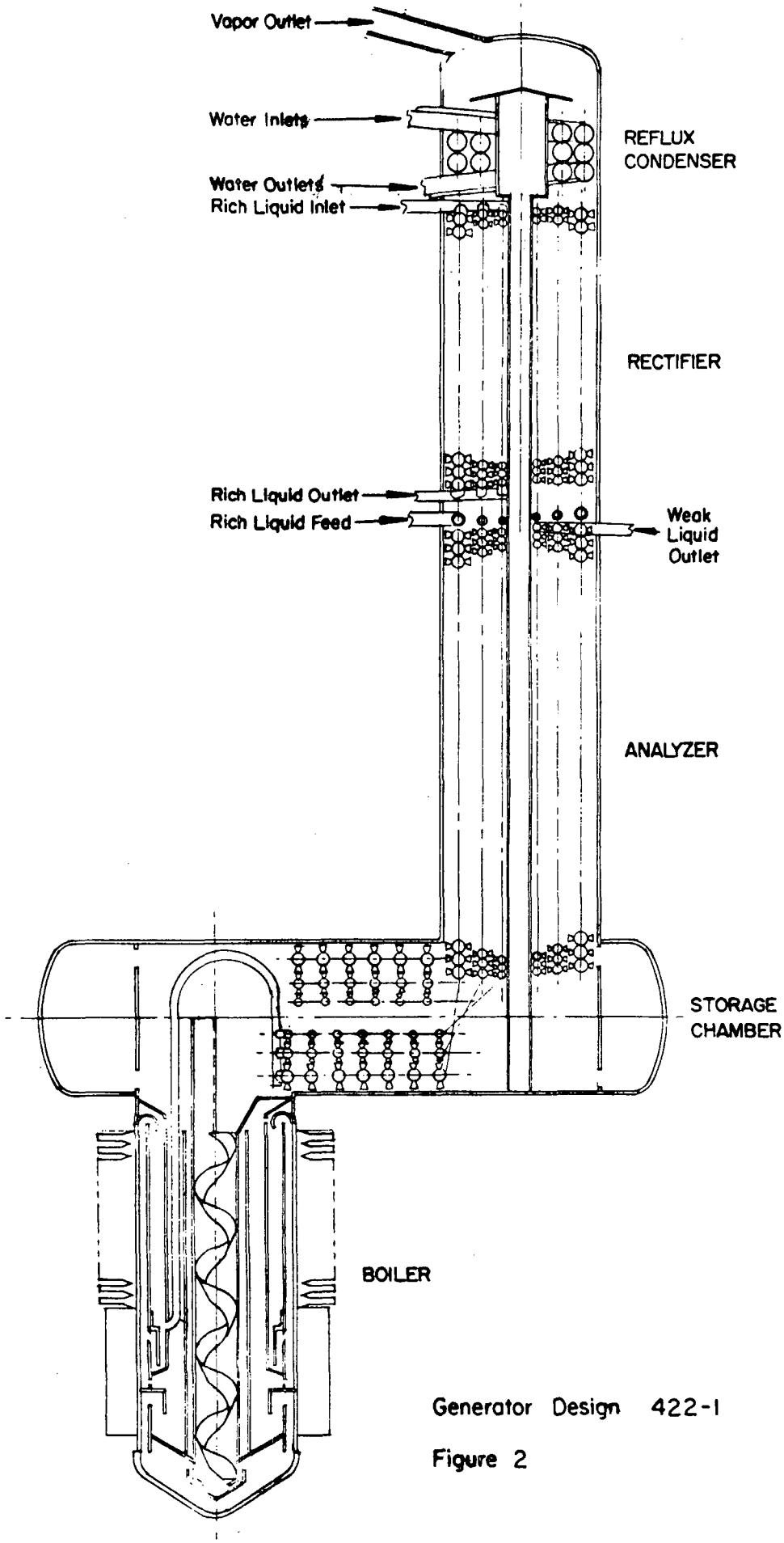

Generator Design 422-1

Figure 2

compared to the theoretical values from Table 2 columns 2 and 9 and expressed as a percent of theoretical. Table 3 summarizes these results over a range of evaporator temperatures for both refrigerants.

TABLE 3

R-133a/ETFE COMPARED TO R-123/ETFE IN GENERATOR DESIGN 422-1

	R-133a/ETFE	R-123/ETFE
Analyzer Load, actual Input	.714	.416
% of Theoretical	86%	77%
Analyzer Approach to Rich Liquid Inlet, (°F)	30.2	25.7
Rectifier Load, actual Input	.122	.038
% of Theoretical	132%	53%
Reflux Load, actual Input	.044	.097
% of Theoretical	112%	237%
Condenser Inlet Temperature, (°F)	187.1	185.4
Weak Liquid Cooling Through the Analyzer, (°F)	82.8	45.6

It is obvious from these results that the analyzer coil for both systems could use improvement. The rectifier coil was too small for the R-123/ETFE system while the reflux coil was too large. This disparity is quite apparent in the percent of theoretical numbers. Both these coils are different from the ones used in the R-133a/ETFE tests, so a direct comparison is not possible. Since the analyzer coils in both sets of data are the same size (they are the

same coil), one might conclude that simultaneous heat and mass transfer in the R-123/ETFE system is more difficult than in the R-133a/ETFE system because the normalized analyzer load is a smaller fraction of the theoretical in the R-123/ETFE system. These calculations were used in the designs of subsequent generators.

The next generator tried on the R-123/ETFE system was a twin columns concept, with extrusions for analyzer, rectifier, and reflux sections. This generator used an updated boiler section design also. A drawing of this generator can be found in Figure 3. The most persistent problem experienced with this generator was flooding. Several modifications were made to the original design before the flooding problem was solved. During the interim, a vapor/liquid separation chamber was added, between the generator and the condenser in order to remove entrained liquid found in the vapor going to the condenser. Modifications were also made to the rich liquid distributors and the vapor tubes at the top of the generator assembly. These modifications solved the flooding problems, and it was possible to operate at steady state to inputs up to 72,000 Btuh. However, the performance of this generator was worse than that of tall generator # 422-1. The analyzer approach to rich liquid inlet temperatures averaged 31.3°F, while the analyzer load divided by the input averaged 0.335 both poorer than generator 422-1. Generator design 422-1 was re-installed on Test Unit 3 for testing of other components while another generator was being designed and built.

The next generator tested with R-123/ETFE was per design 422-13. A drawing of this generator can be found in Figure 4. An enlarged vertical and horizontal analyzer section, consisting of two different extrusions, was incorporated into this design. In order to meet the 40-inch overall height objective, the

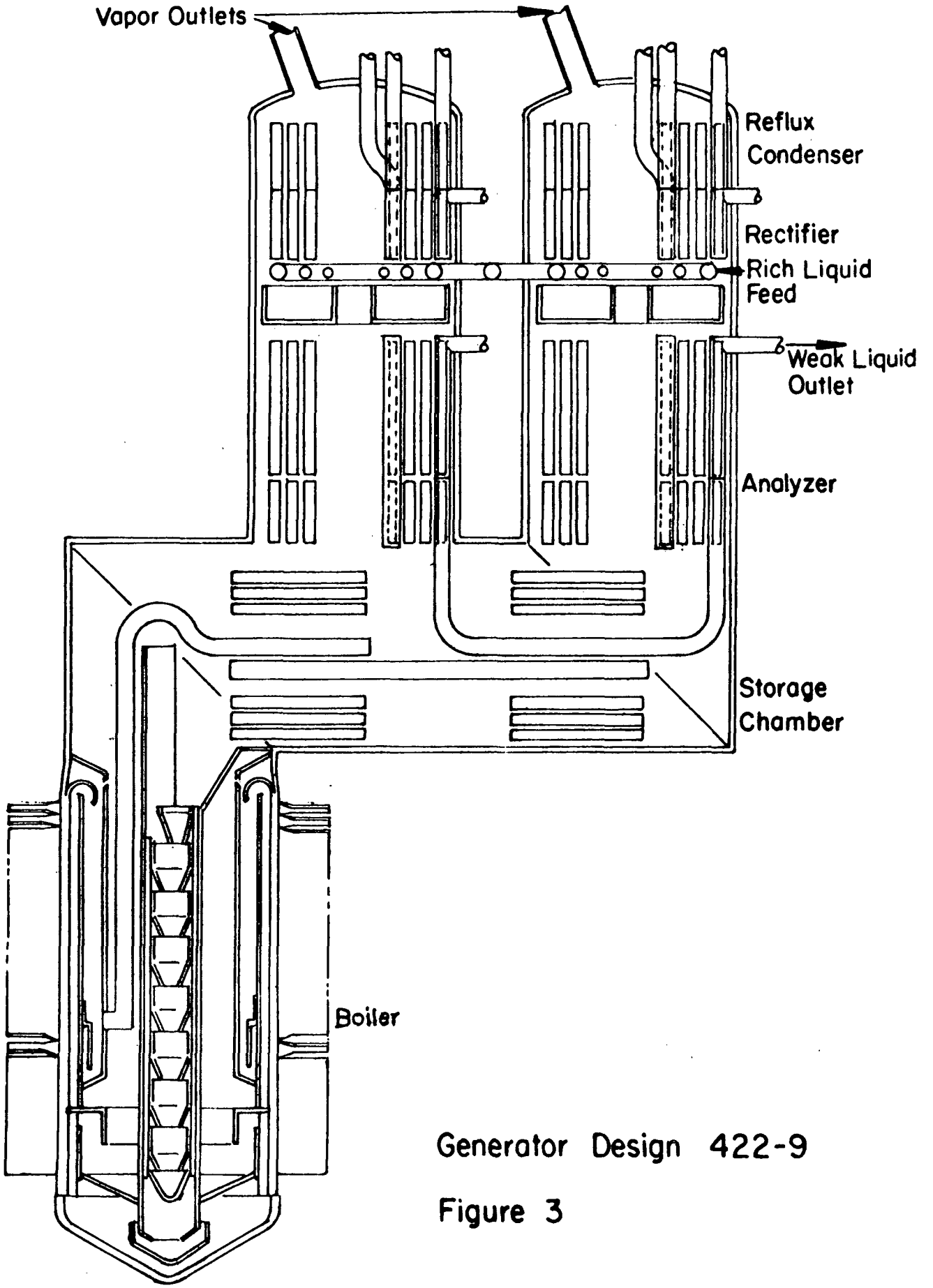

Generator Design 422-9

Figure 3

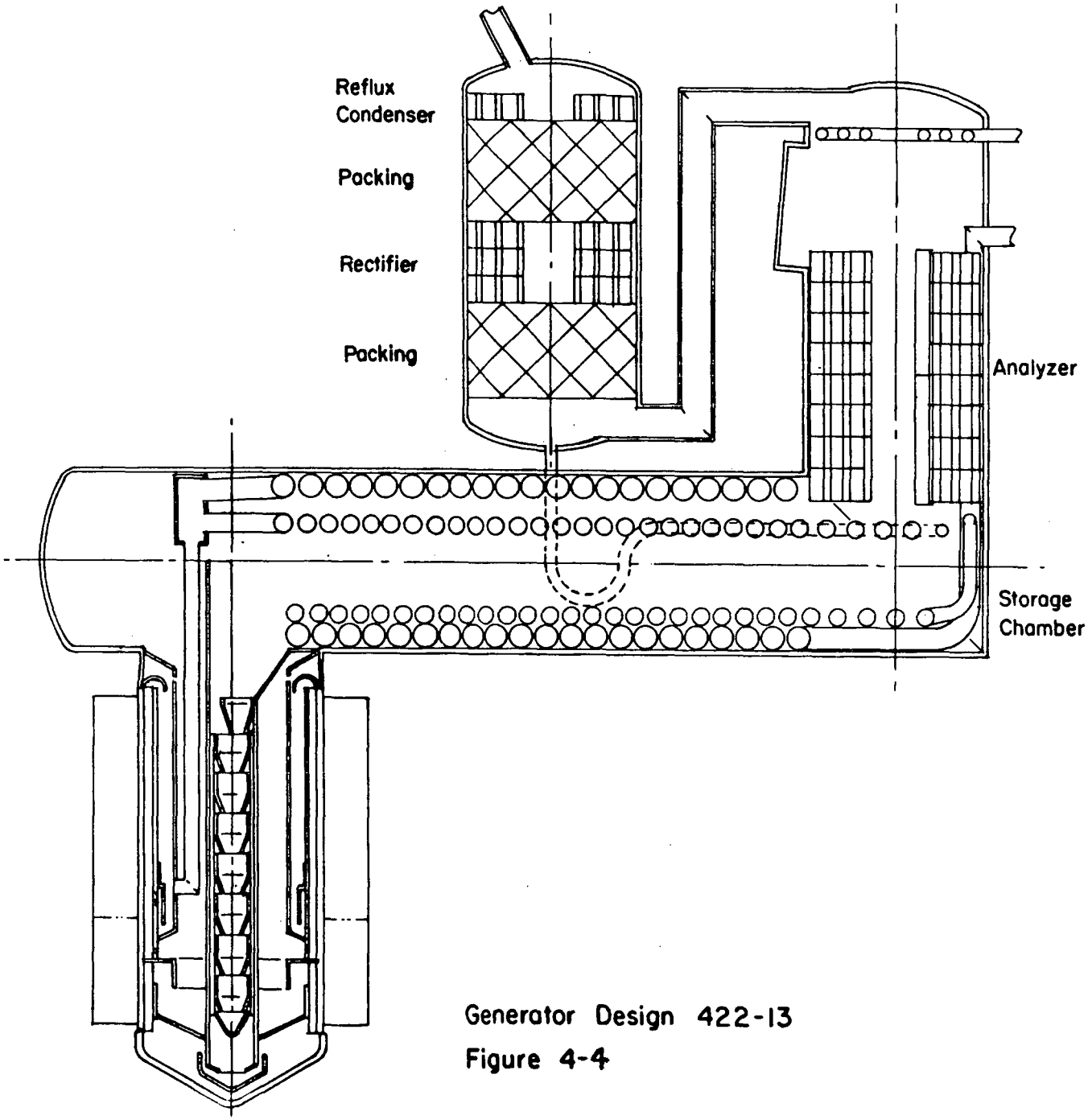

Generator Design 422-13
Figure 4-4

rectifier and reflux sections had to be contained in a separate pressure vessel alongside the vertical analyzer section. Beneath the rectifier and reflux coils, a mesh packing material was added to promote vapor/liquid equilibrium. The storage chamber/horizontal analyzer was somewhat lengthened when compared to the previous two designs, but the overall height (including burner) was kept within the 40 inch objective.

The performance of this generator was satisfactory over the range of evaporator temperatures. When coupled with the other component developments, the generator met the COP objectives at 60,000 Btuh input. The analyzer approach to rich liquid inlet temperature averaged 24.6 °F over quite a range of evaporator temperatures. This approach was better than the approach in the tall, 422-1 design generator. More detailed information concerning total system performance is contained in the following sections.

Any discussion of generator development must include vapor purity. The design and effectiveness of the rectifier and reflux sections are critical with respect to the amount of absorbent carried over to the condenser and the operation of the evaporator and precooler.

Unfortunately, the R-123 available had significant amounts of R-113 in it as an impurity. Gas chromatographic analysis of solutions from Test Unit #3 during operation showed varying amounts of R-113 in the refrigerant, weak liquid, and rich liquid. Typically, the amount of R-113 would be 1.9% by weight in the liquid refrigerant, and 0.37% and 0.78% by weight in the weak and rich liquids, respectively. While the percentagaes of R-113 are not large, the difference in boiling points between R-123 and R-113 widened the evaporation temperature range, seriously affecting the performance of the evaporator. These percentages also clouded the determinations of the purity of the vapor leaving

the generator; consequently, a final optimization of the rectifier and reflux sections was not performed. It was left for later work with R-123a which would be considerably purer than the R-123. The results of gas chromatography investigations with R-123a are contained in a later section of this report beginning on page 4-49.

ABSORBER DEVELOPMENT

When the working fluids in Test Unit No. 3 were changed from R-133a/ETFE, to R-123/ETFE, the absorber on the unit was of an early, flat extrusion, spiral-wound type. That type of absorber had proved very difficult to assemble consistently and had not been continued. Therefore, absorbers from the extrusion development program for the R-133a/ETFE system were installed at the first opportunity. An extensive amount of testing with these advanced absorber concepts had been done on Test Unit No. 1 using R-133a/ETFE; therefore, there were data available for detailed comparisons.

Absorber design 411-19 represented the aluminum extrusion, R-133a/ETFE absorber at the beginning of the R-123/ETFE program. Figure 5 is a drawing of this absorber type. This absorber had alternating water-cooled and solution-cooled sections and a proprietary surface configuration which enhanced the heat and mass transfer characteristics of the absorbing film. The performance of these absorbers was evaluated by calculating the overall heat transfer coefficient for each of the four sections (two water-cooled and two solution-cooled).

At the start, having only early and uncertain data, the overall heat transfer coefficient for each section was calculated on the basis of one major assumption: that the temperature change of the absorbing fluid was proportional to the heat evolved in each section. By using this assumption and knowing the fluid inlet and outlet temperatures in the absorber, and the heat evolved in each section, intermediate solution temperatures were calculated. The overall heat transfer coefficient of each section was based on temperatures obtained from this calculated temperature difference and the projected area of the absorption surface, without taking into consideration any of the surface

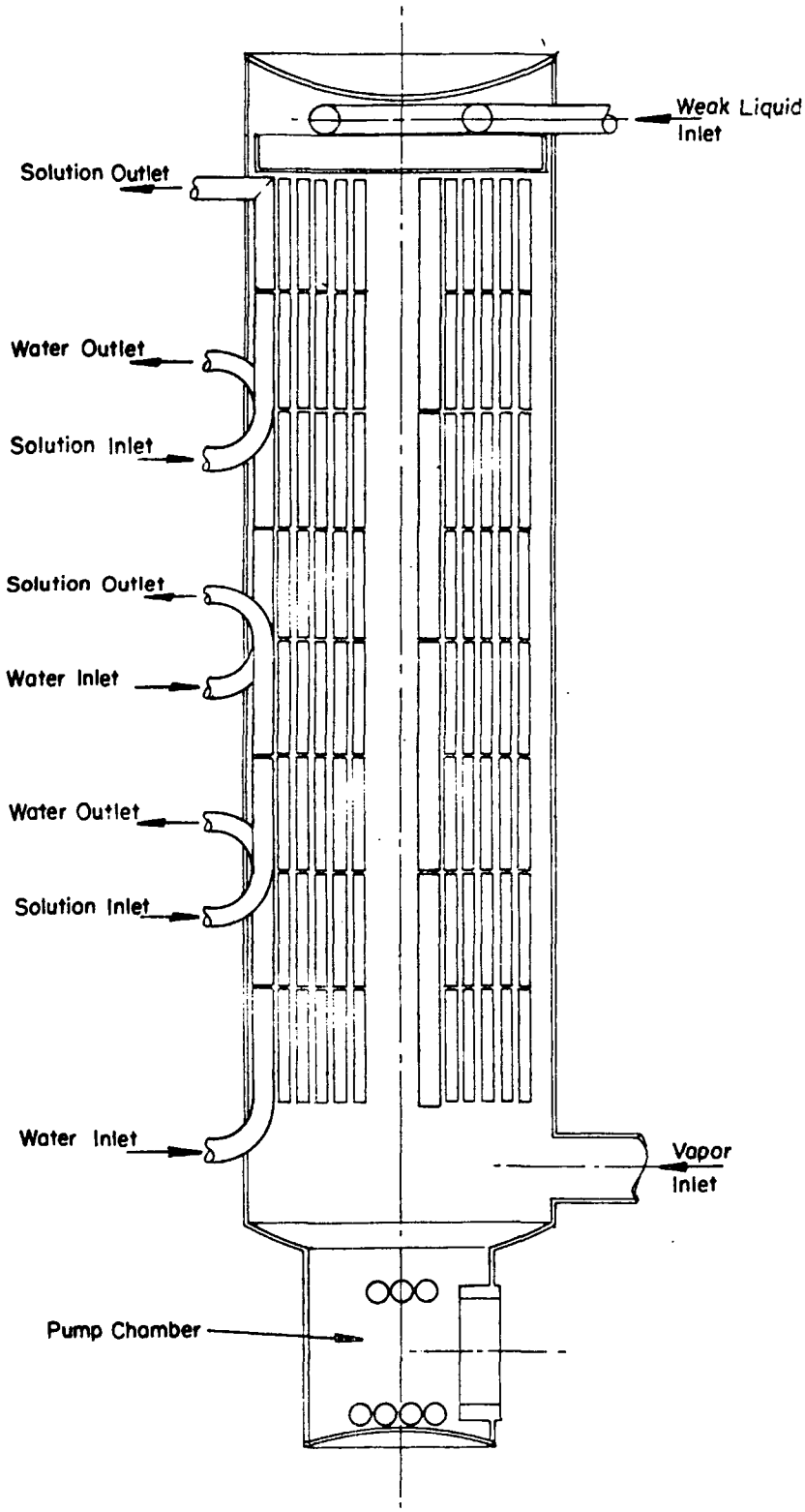

Figure 5 Absorber Design 411-19

augmentation due to the extrusion design. These calculations then yield an estimate of the overall heat transfer coefficient for the absorber. Although there is considerable variation in the heat transfer coefficient from section to section, this technique allows various designs to be compared. Table 4 compares the overall heat transfer coefficient for R-133a/ETFE to the coefficient for R-123/ETFE for the same absorber. This absorber was run on Test Unit No. 1 with R-133a/ETFE and then removed and run on Test Unit No. 3 with R-123/ETFE.

TABLE 4

ABSORBER PERFORMANCE COMPARISON

TEST UNIT NO. 1 ABSORBER 411-19 R-133a/ETFE

Weak Liquid Flow Rate	Overall Heat Transfer Coefficient Btu/hr/ft2/°F				
lb/hr	Section 4	Section 3	Section 2	Section 1	Average
1093	59	58	37	107	65
1093	68	69	37	104	70
1148	70	71	37	106	71
914	66	67	32	91	64
1258	72	73	40	111	74
1038	69	78	35	99	70
1024	70	74	36	106	72
1024	70	74	38	107	72
914	67	67	31	92	64
1038	69	73	38	99	70
1245	73	71	35	94	68
1451	81	80	38	97	74
1451	81	78	37	94	72
1038	69	73	38	107	72

Water Cooled Average = 86 Solution Colled Average = 53 Overall Average = 70

TEST UNIT NO. 3 ABSORBER 411-19 R-123/ETFE

Weak Liquid Flow Rate	Overall Heat Transfer Coefficient Btu/hr/ft2/°F				
lb/hr	Section 4	Section 3	Section 2	Section 1	Average
741	47.5	46.5	24.2	87.6	51.4
571	41.4	47.1	20.0	77.1	46.4
1024	50.9	38.2	13.5	94.6	49.3
1228	44.6	27.9	14.2	94.9	45.4

Water Cooled Average = 64.2 Solution Cooled Average = 32.0 Overall Average = 48.1

It is apparent, by inspection of these results, that on the same absorption surface, the R-123/ETFE system did not perform as well as the R-133a/ETFE system. This fact, along with the fact that the same generator design did not do as well with R-123/ETFE, indicated that there were significant heat transfer differences between the two fluid systems.

A more fundamental look at the forced convection heat transfer characteristics of the two systems led to the conclusion that, on the same hardware, the forced convection heat transfer coefficients for the R-123/ETFE system would be expected to be lower than for the R-133a/ETFE system. The reasons for this were: the lower mass flow rate, lower thermal conductivity, and lower heat capacity of R-123/ETFE solutions. The flow rate, conductivity and heat capacity of the solutions were expected to be lower because the solubility of R-123 in ETFE is greater than that of R-133a in ETFE at comparable conditions. That higher solubility would result in lowered relative pumping, and would alter the thermophysical properties because the conductivity and heat capacity of the fluorocarbons are lower than those of ETFE.

In general, the need for better heat and mass transfer in the absorber for the R-123/ETFE system was obvious. A step-wise process of modification and eventual re-design of the absorber was therefore carried out. Since extrusion development was beyond the scope of this project, the extrusions which were developed for R-133a/ETFE were used in different configurations.

In response to the need for better heat and mass transfer, modifications were made to Test Unit No. 3 in order to increase the area for heat transfer and enhance mass transfer in the absorber as outlined in Figure 6. An extra liquid-liquid heat exchanger was added to the system, and an adiabatic packed chamber was added above the absorber. The absorber was made entirely

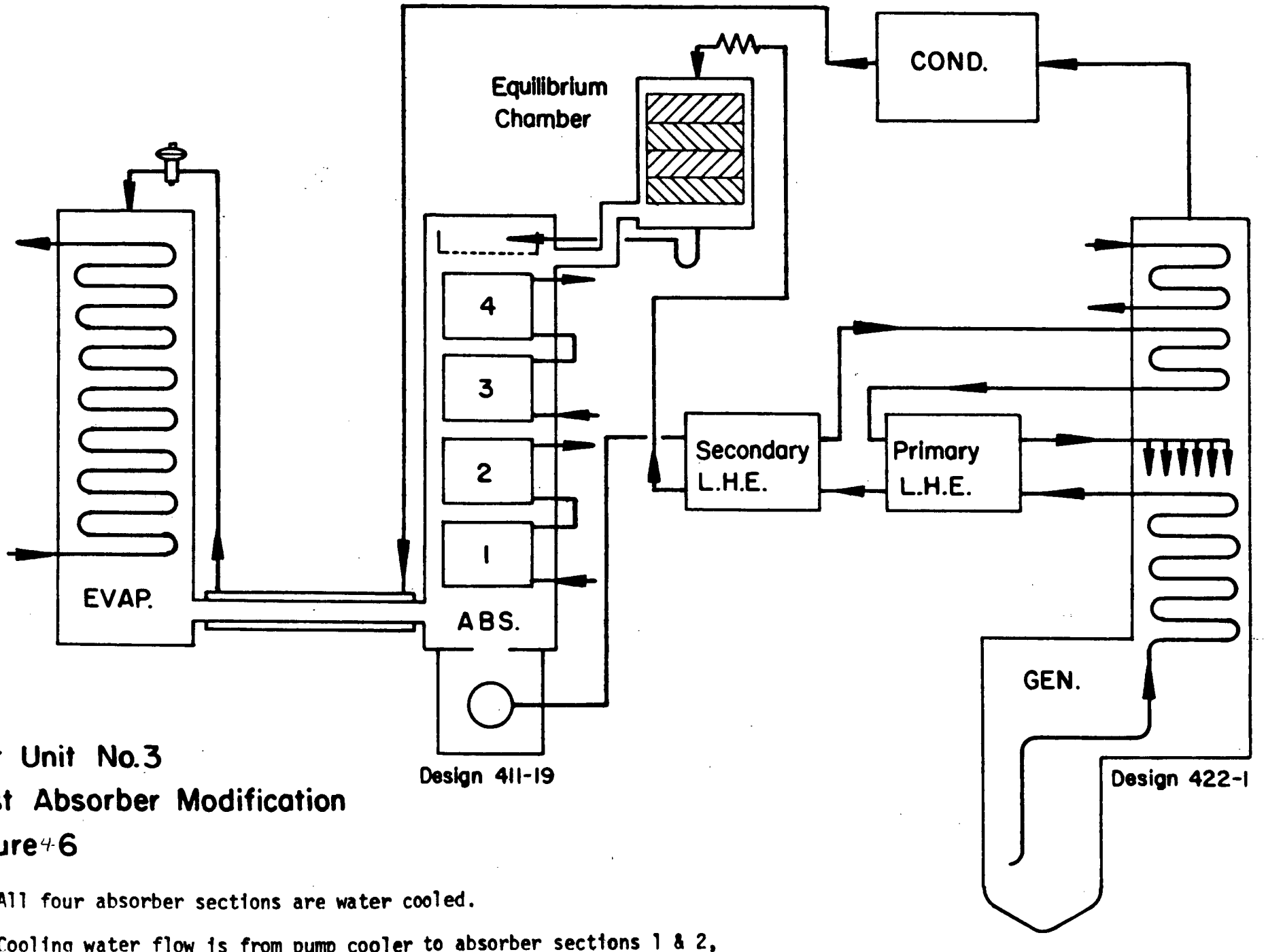

Test Unit No.3
First Absorber Modification
Figure 4-6

1. All four absorber sections are water cooled.

2. Cooling water flow is from pump cooler to absorber sections 1 & 2, to condenser, to absorber sections 3 & 4 and finally to reflux.

water-cooled so that the rich solution pumped from the absorber would flow through the secondary liquid heat exchanger, then to the rectifier and on to the primary liquid heat exchanger before entering the generator. The weak liquid, on leaving the generator analyzer coil would flow to the primary liquid heat exchanger, then through the secondary liquid heat exchanger. The sub-cooled weak liquid would then enter the adiabatic equilibrium chamber above the absorber. In that chamber, the weak liquid would absorb vapor and have its temperature increased adiabatically. The equilibrium chamber consisted of a nine-inch diameter shell approximately 24 inches tall, packed with four layers of aluminum wire mesh packing as indicated in Figure 6. Each layer was approximately 4.25 inches tall.

The performance of Test Unit No. 3 with these changes is listed in Table 5. The data represent inputs at 60,000 Btuh in the first three columns and 72,000 Btuh in the other three and evaporator temperatures of approximately 40, 20, and 0°F.

The change in the overall heat transfer coefficient of the absorber is of the most interest. Since all sections were water-cooled, a useful basis of comparison is the overall heat transfer coefficient of the water-cooled sections of previous absorber configurations. As listed earlier, for Test Unit No. 1, using R-133a/ETFE in absorber design 411-19, the average overall heat transfer coefficient for the water-cooled sections was 86 Btu/hr/sq ft/°F for a series of tests. For Test Unit No. 3 with the <u>same</u> absorber design and flow pattern, but with R-123/ETFE the overall heat transfer coefficient was 64.2 Btu/hr/sq ft/°F for the water cooled sections. For the new configuration represented by Figure 6, the average overall heat transfer coefficient for a series of tests with R-123/ETFE was 64.8 Btu/hr sq ft/°F. This value is very close to the average of the water-cooled sections of the previous configuration. Since all sections were water-cooled, this

TABLE 5

TEST UNIT NO. 3 - PERFORMANCE WITH FIRST ABSORBER MODIFICATION

Test Number	1	2	3	4	5	6
Evaporator Temperature °F	40.7	21.6	-1.0	39.0	19.5	-0.4
COP - Heating	1.203	1.132	.971	1.100	1.020	.920
COP - Cooling	.436	.373	.253	.381	.305	.234
Input (Btuh)	61147.	60178.	60579.	71784.	71471.	71115.
Weak Liquid Flow Rate (lb/hr)	779.	955.	945.	771.	999.	859.
Cooling Water Temperature In °F	95.2	95.2	95.6	95.6	97.8	94.9
Cooling Water Temperature Out °F	127.2	125.5	125.5	130.0	129.4	124.9
Generator Temp °F	270.2	290.4	330.9	228.7	310.6	338.8
Minimum Absorption Temperature °F	105.2	103.7	101.8	105.5	105.9	100.8
Absorber Approach to Inlet, Cooling Water Temperature °F	9.9	8.3	6.1	9.8	8.0	5.8
Primary LHE UA (Btu/hr/°F)	1276.	1415.	1424.	1307.	1507.	1362.
Secondary LHE UA (Btu/hr/°F)	1153.	1326.	1407.	1184.	1438.	1309.
Analyzer Load / Input X 100, %	41.9	49.4	50.0	40.2	47.9	41.0
Under Heating of Rich Liquid to Generator, °F	25.0	21.3	4.0	21.5	15.4	Overheated

overall average is higher than the previous overall average of 48.1 of the combination of solution-cooled and water-cooled sections.

In addition to the overall heat transfer coefficient, the temperature of approach between the cooling water inlet to the absorber and rich solution outlet is an indication of how well the absorber is performing. For the completely water-cooled absorber, this approach averaged about 8.0°F for a series of tests; this compares to an average of 16.6°F for the previous absorber configuration of alternating water-cooled and solution-cooled sections. This particular configuration had a better approach for two reasons. One was that all the absorber surface was water-cooled, and the second that the added liquid heat exchanger and equilibrium chamber eliminated the possibility of weak liquid flashing as it entered the absorber.

The equilibrium chamber operated satisfactorily, enriching the subcooled weak liquid and increasing its temperature so that a 125°F outlet water temperature was easily attainable. Table 6 summarizes the operation of the equilibrium chamber.

TABLE 6

EQUILIBRIUM CHAMBER OPERATION

Weak Liquid Inlet Temperature, °F	111.8	116.7	124.2	112.6	120.4	123.5
Equilibrium Chamber Outlet Temperature, °F	140.0	136.4	137.6	143.6	141.2	139.1
Evaporator Temperature, °F	40.7	21.6	-1.0	39.0	19.5	-0.4
Weak Liquid Concentration, Wt. Frac*	.2555	.1876	.0725	.2147	.1503	.0500
Eq. Chamber Outlet Concentration, Wt. Frac	.3256	.2454	.1504	.3024	.2237	.1459
Absorber Outlet Concentration Wt. Frac	.4894	.3770	.2701	.4767	.3616	.2737

* Weight Fraction

The performance of the modified unit at 60,000 Btuh input was improved over the previous configuration; however, there was need for further improvement in the absorber. The most obvious shortcoming of the water-cooled absorber, even with the additional liquid heat exchanger, was that the amount of heat returned to the rich liquid stream was too small. That was evidenced by the under heating of the rich liquid entering the generator.

The next modification to the absorber was to change one of the water-cooled sections back to solution-cooled in order to increase the heating of the rich liquid. Figure 7 is a block diagram of that system. The performance of Test Unit No. 3 with this change is given in Table 7. This table covers evaporator temperatures from 0 to 40°F and inputs of approximately 60,000 and 72,000 Btuh.

In most cases, the performance of the unit was improved over the previous modification, especially at the higher heat input. The underheating of the rich liquid going to the generator had been decreased considerably. This better recuperation of heat led to better performance for this modification.

Using the information gained from these series of modifications and tests, a final absorber was designed for the R-123/ETFE system. This absorber utilized extrusions developed for the R-133a/ETFE system, as well as wire mesh packing to facilitate mass transfer between the phases. Since no new extrusions were developed for the R-123/ETFE system, it was not possible to meet the 40-inch overall height limitation with the available extrusions and packing material. A drawing of this absorber can be found in Figure 8. This absorber design incorporates packing in between heat transfer sections and more solution-cooled surface area. This absorber was built and installed on Test Unit No. 3; it is designated design 411-25.

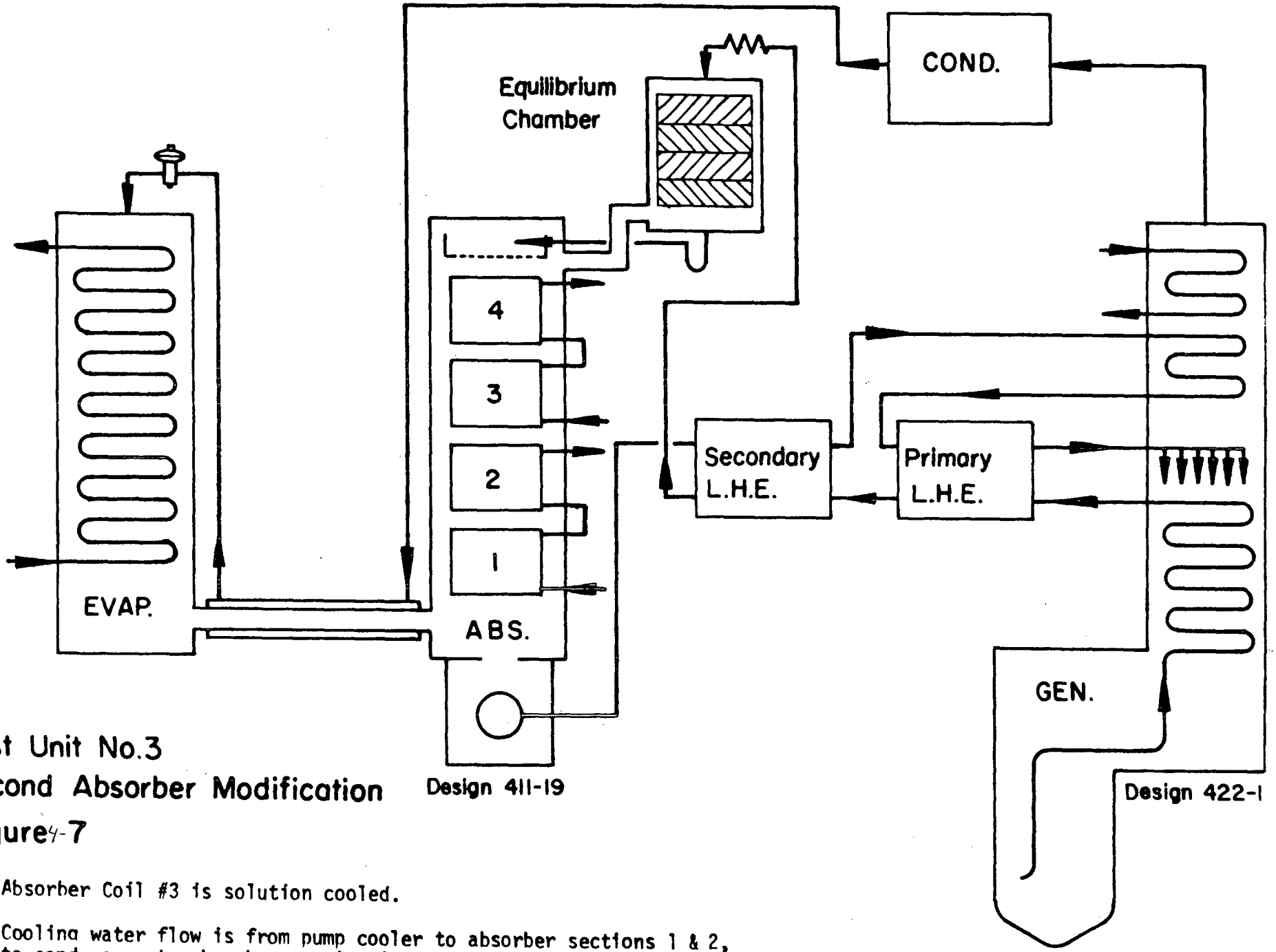

Test Unit No.3
Second Absorber Modification
Figure 4-7

1. Absorber Coil #3 is solution cooled.

2. Cooling water flow is from pump cooler to absorber sections 1 & 2, to condenser, to absorber section 4 and finally to reflux.

TABLE 7

TEST UNIT NO. 3 - PERFORMANCE WITH SECOND ABSORBER MODIFICATION

Test Number	1	2	3	4	5	6
Evaporator Temperature °F	38.5	19.4	-0.5	40.0	20.0	0.0
COP - Heating	1.134	1.081	.939	1.223	1.121	1.011
COP - Cooling	.403	.389	.214	.432	.364	.259
Input (Btuh)	70425.	72215.	72662.	60412.	60792.	60544.
Weak Liquid Flow Rate (lb/hr)	758.	949.	1066.	751.	918.	995.
Cooling Water Temperature In, °F	95.3	94.9	95.3	94.8	95.4	95.1
Cooling Water Temperature Out, °F	128.7	128.2	125.4	125.2	125.4	125.2
Generator Temp °F	290.5	318.5	349.3	271.8	299.3	330.8
Minimum Absorption Temperature °F	104.1	102.9	100.0	102.8	102.8	100.5
Absorber Approach to Inlet, Hot Water Temperature °F	8.7	7.9	4.6	7.9	7.3	5.3
Secondary LHE UA (Btu/hr/°F)	1340.	1496.	1352.	1327.	1428.	1579.
Analyzer Load, % Input	39.8	44.9	49.9	42.0	49.6	52.2
Underheating of Rich Liquid to Generator °F	17.3	12.3	Overheated	11.2	0.2	Overheated

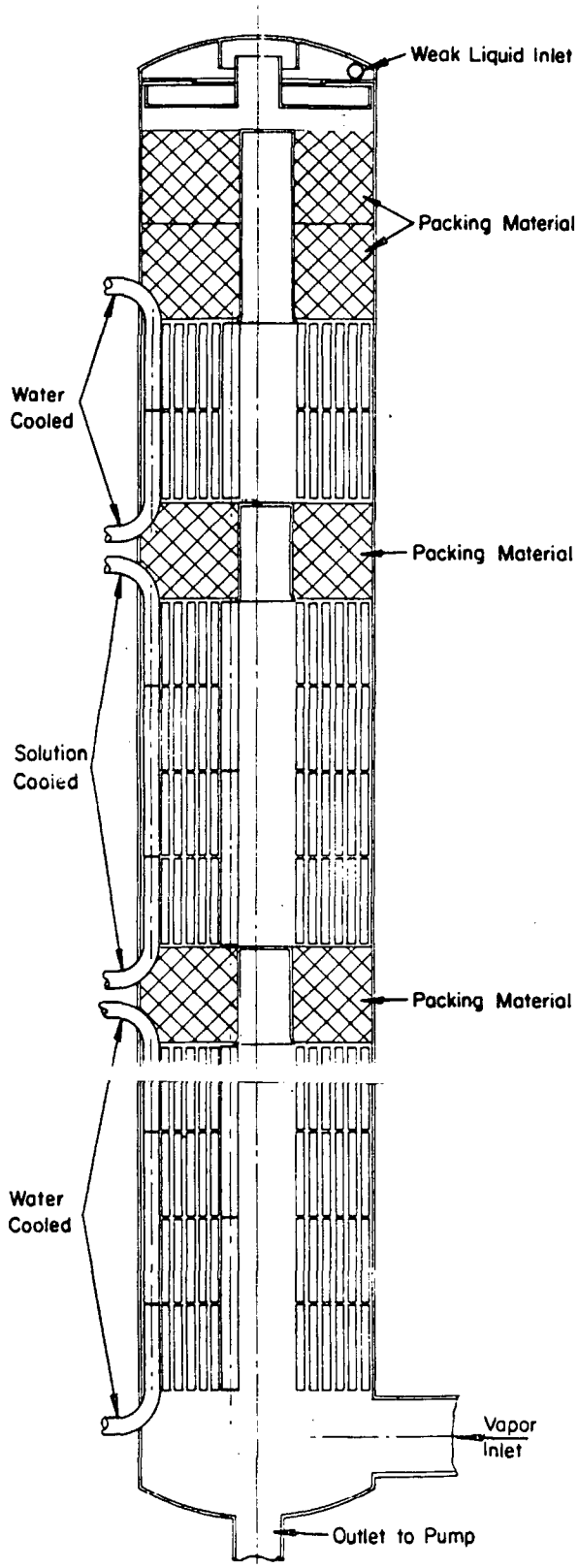

Figure 8 Absorber Design 411-25

A block diagram of Test Unit No. 3 with absorber 411-25 is shown in Figure 9. The performance of the unit over a range of evaporator temperatures is shown in Figure 10. The performance remained substantially the same as that of the last configuration, but only a limited amount of testing was done because other components became available for installation and test at that time.

A new generator (design 422-13), a new evaporator (design 410-46), and new precooler (design 470-14) were installed on Test Unit No. 3 along with absorber 411-25. Details of the generator construction are given in a previous section. Discussions of the evaporator and precooler design are found in later sections of this report.

Figure 11 is a block diagram of Test Unit No. 3 with these updated components. The performance of these components all in some way affect the performance of the absorber and, consequently, overall system performance. Detailed data on individual component performance could not be taken at this point. System performance was therefore used to measure the progress of component development. The performance of Test Unit No. 3 at 60,000 Btuh input over a range of evaporator temperatures for these components is given in Figure 12. These data met the performance objective at 60,000 Btuh input at a 20°F evaporator and came close at the 40°F and 0°F temperatures. No further changes were made to the absorber.

Since extrusion development was beyond the scope of the program, the 40-inch overall height limitation was not met by the absorber. However, the performance of the absorber was such that it did not limit the development of the other components. At this point in the absorber development, a quantity of R-123a sufficient to charge Test Unit No. 3 became available, and the testing with R-123/ETFE was stopped.

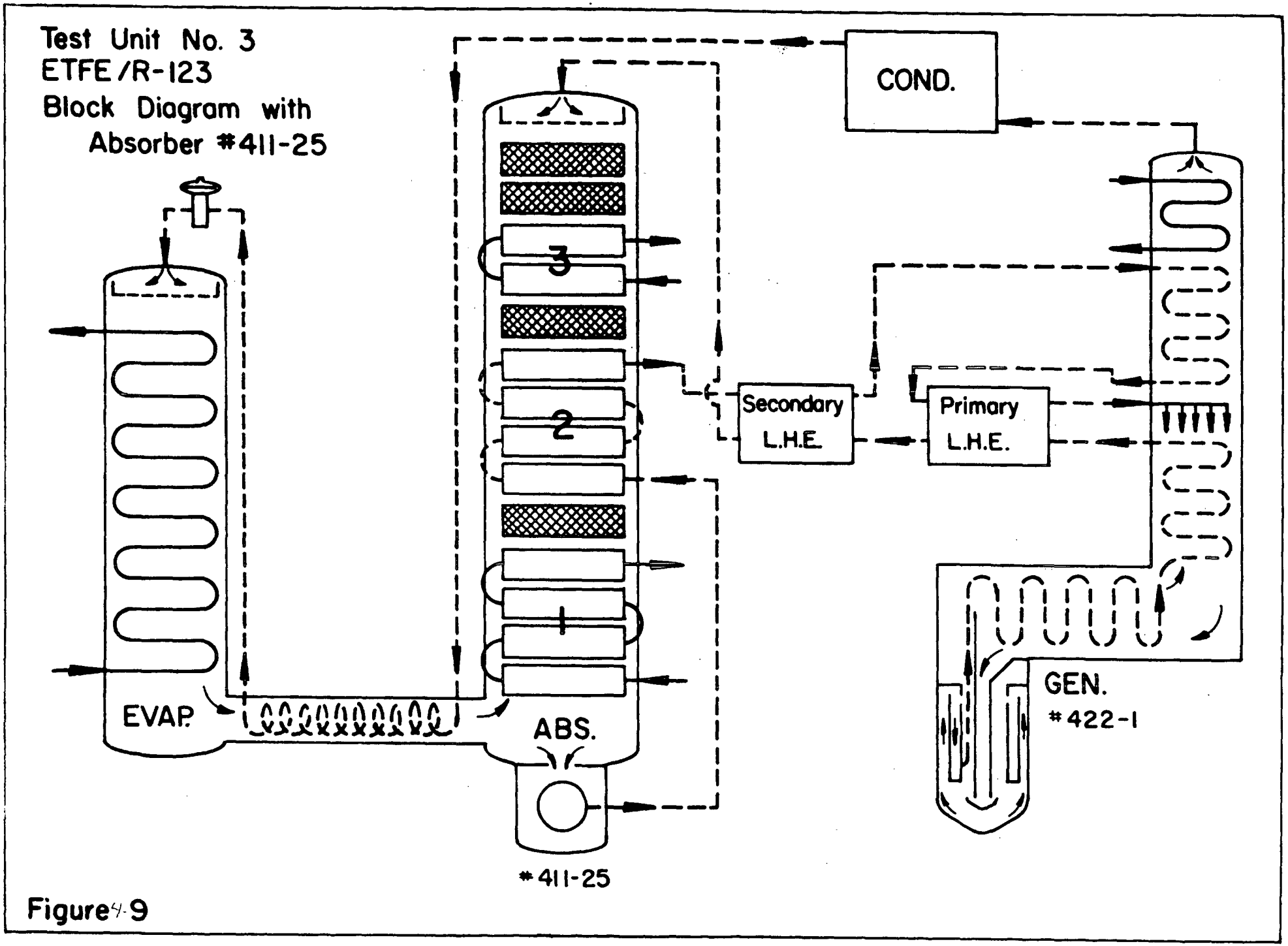
Test Unit No. 3
ETFE/R-123
Block Diagram with
Absorber #411-25
COND.
3
2
1
Secondary
L.H.E.
Primary
L.H.E.
EVAP.
ABS.
#411-25
GEN.
#422-1

Figure 4-9

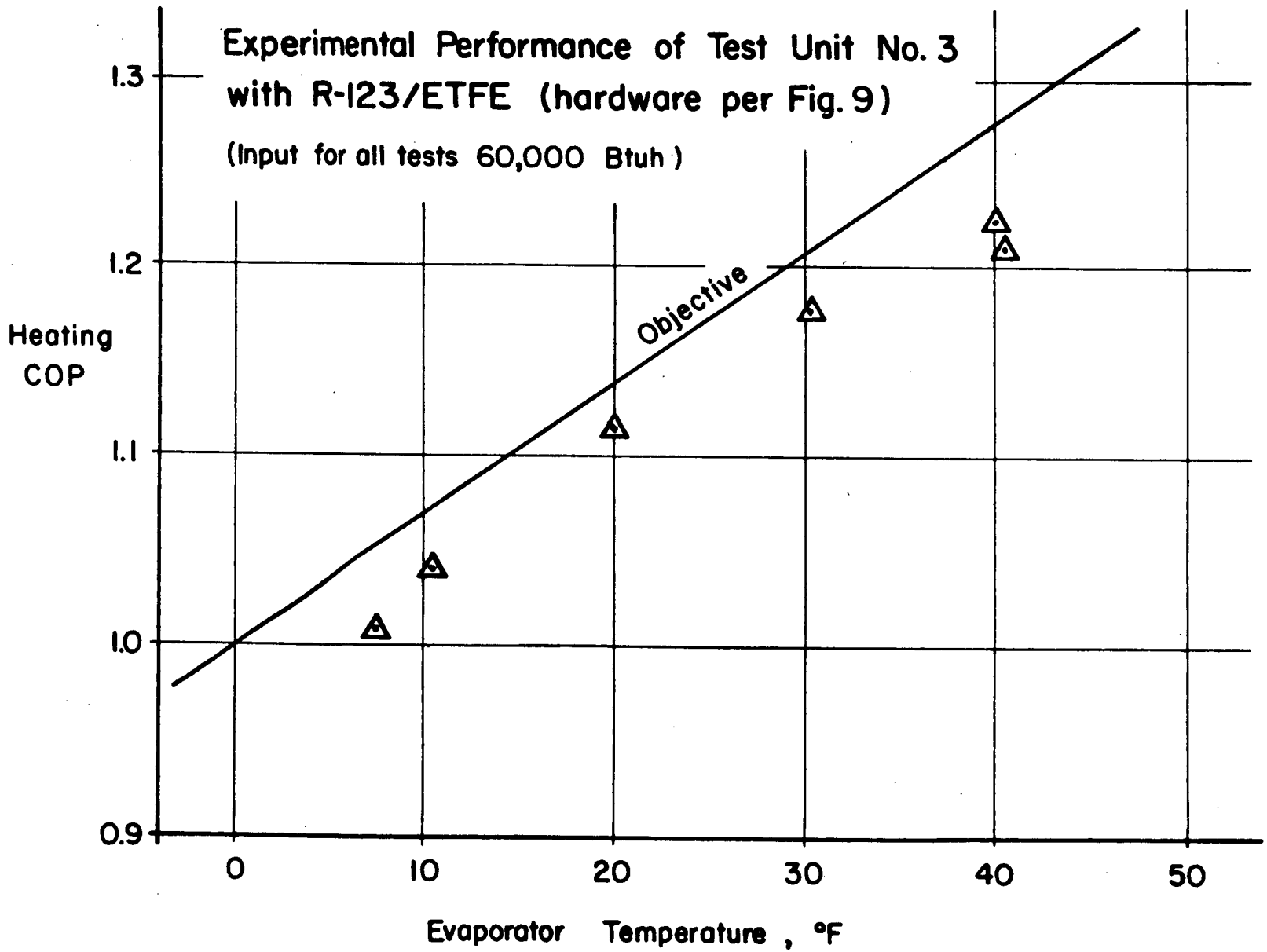
Experimental Performance of Test Unit No. 3
with R-123/ETFE (hardware per Fig. 9)
(Input for all tests 60,000 Btuh)
Objective
Heating
COP
1.3
1.2
1.1
1.0
0.9
0
10
20
30
40
50
Evaporator Temperature, °F

Figure 4-10

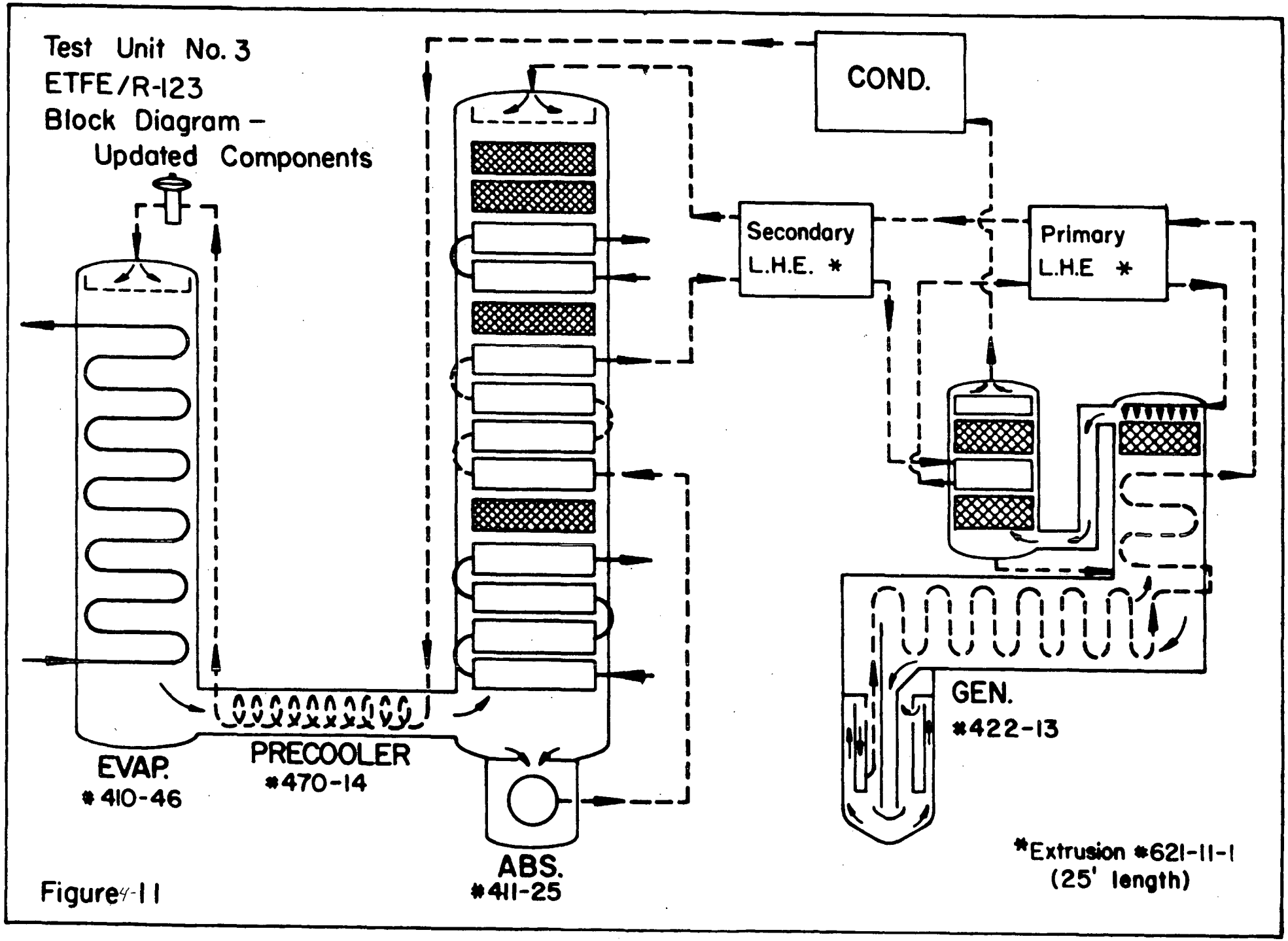
Test Unit No. 3
ETFE/R-123
Block Diagram –
Updated Components
COND.
Secondary
L.H.E. *
Primary
L.H.E *
EVAP.
* 410-46
PRECOOLER
*470-14
ABS.
*411-25
GEN.
*422-13
*Extrusion *621-11-1
(25' length)

Figure 4-11

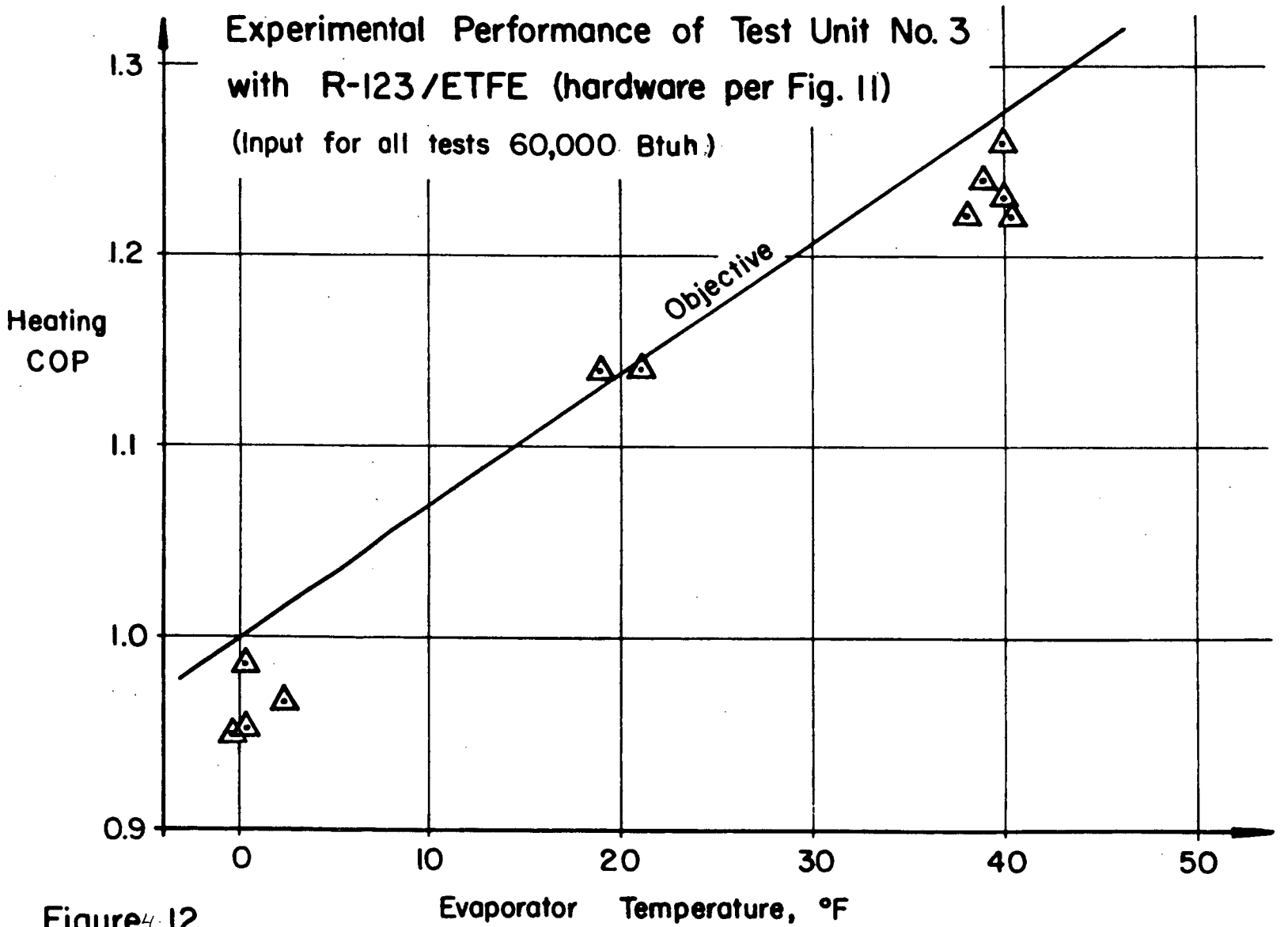
Experimental Performance of Test Unit No. 3
with R-123/ETFE (hardware per Fig. 11)
(Input for all tests 60,000 Btuh)
Objective
Heating COP
1.3
1.2
1.1
1.0
0.9
0
10
20
30
40
50
Evaporator Temperature, °F

Figure 4-12

LIQUID HEAT EXCHANGER PERFORMANCE

After the preliminary tests with R-123/ETFE in Test Unit No. 3, a new liquid heat exchanger (LHE) was installed in unit #3 for comparison purposes. An extrusion had been developed for use as the liquid heat exchanger of the R-133a/ETFE system. It had been successfully employed on Test Unit No. 1 and on the M3 production prototype units, both with R-133a. An identical liquid heat exchanger was built and installed on Test Unit No. 3 for use with R-123/ETFE. Figure 13 contains a cross sectional view of the extrusion (extrusion 621-11-1) and a view of the assembled liquid heat exchanger.

Heat transfer in the LHE was compared for the two refrigerant/absorbent systems. Both liquid heat exchangers consisted of 25 feet of extrusion #621-11-1. The effective area of heat transfer surface was difficult to calculate, but the UA values were calculated and plotted against weak liquid flow rate in order to compare the two systems. Figure 14 presents these results for both R-133a/ETFE and R-123/ETFE. For equal weak liquid flow rates the UA product is seen to be greater for the R-133a/ETFE system. There is no data for the R-133a/ETFE system at very low weak liquid flow rates where extrapolation might indicate the R-123/ETFE system might be better. As indicated earlier, part of the reason for the lower heat transfer of the R-123/ETFE system is thought to be due to the slightly different thermophysical properties of the R-123/ETFE solutions when compared to R-133a/ETFE solutions.

CONDENSER DEVELOPMENT

The use of low pressure refrigerants required an immediate change in the condenser in order to eliminate what would be an excessive pressure drop on the vapor side of the condenser. The immediate solution for this problem was

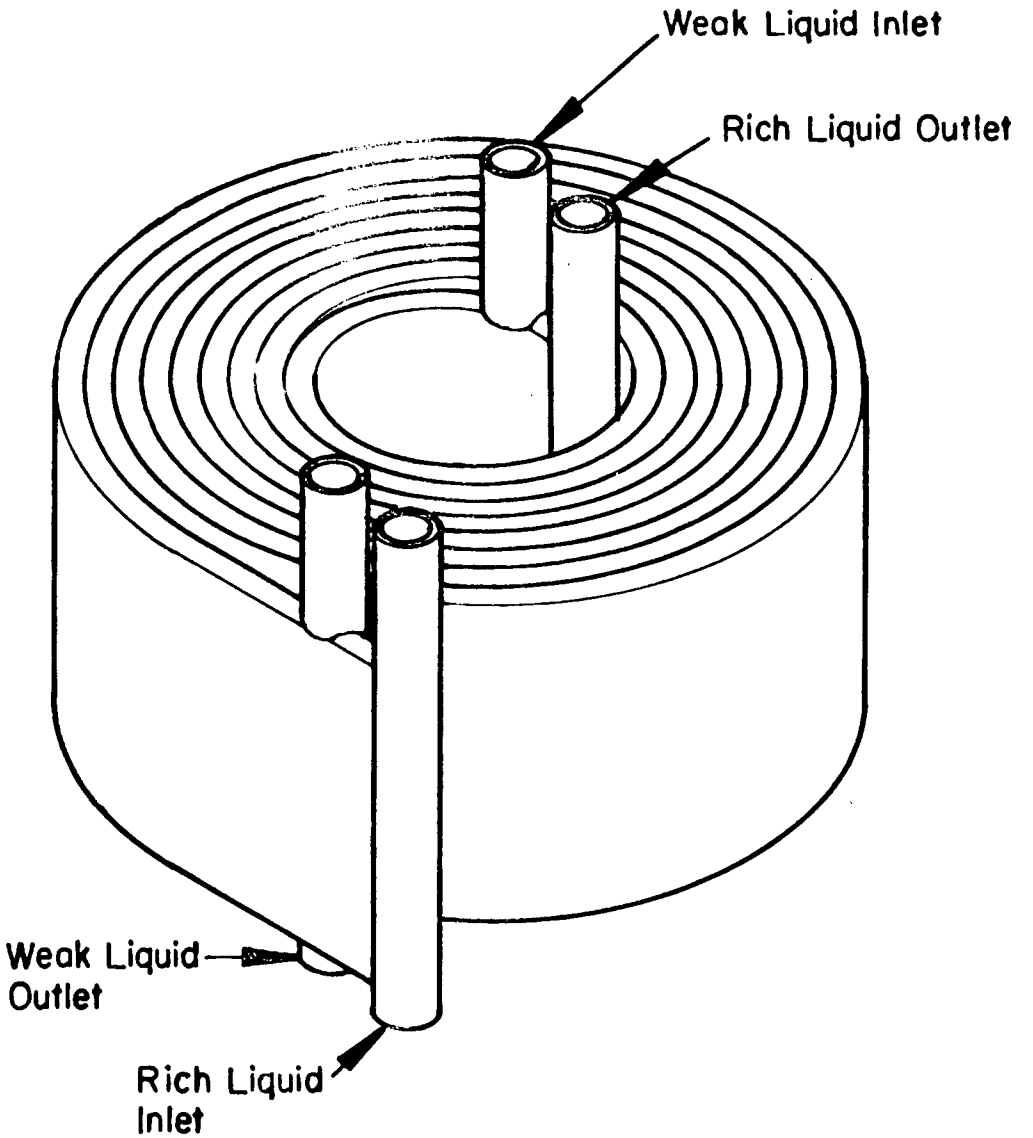

Extrusion Cross Section

Figure 13 Liquid Heat Exchanger and Extrusion 621-11-1

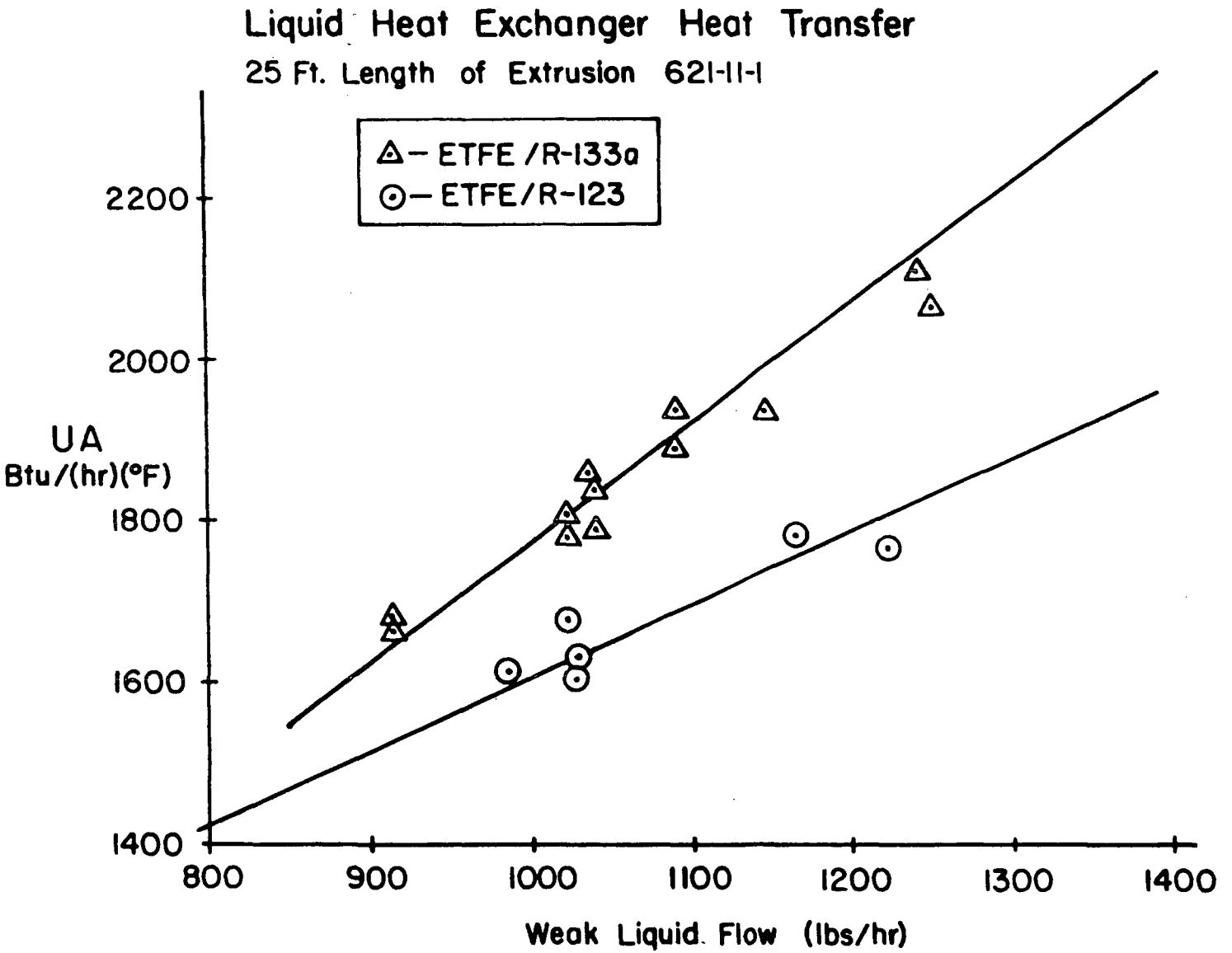
Liquid Heat Exchanger Heat Transfer
25 Ft. Length of Extrusion 621-11-1
△ – ETFE /R-133a
⊙ – ETFE/R-123
UA
Btu/(hr)(°F)
2200
2000
1800
1600
1400
800
900
1000
1100
1200
1300
1400
Weak Liquid Flow (lbs/hr)

Figure 14

to reverse the vapor and coolant passages on the R-133a condenser and use it for R-123. This provided an acceptable pressure drop on the vapor side, but the coolant side pressure drop was excessive; therefore, two coolant pumps in series were required. This particular condenser was made from a 20-foot length of extrusion (die design #42543-T) wrapped in a spiral.

The long-term solution to this problem was to design an extrusion which could be used for a condenser with low pressure refrigerants without excessive pressure drop. Such an extrusion was designed as a variation of the previous condenser extrusion design. Bases for the calculations were as follows:

1. Refrigerant vapor, R-123
   Temperature entering condenser, 160°F
   Pressure, 30 psia
   Flow, 580 lbs/hr

2. Coolant, 40% aqueous ethylene glycol
   Average temperature 115°F
   Density, 65 lbs/cu.ft.
   Viscosity, 1.5 cp
   Flow, 3000 lbs/hr

Table 8 contains the results of these calculations for proposed extrusion design # 431-27.

The vapor side pressure drop per foot was calculated at intervals along the length of the extrusion. These values were plotted against the length of the extrusion, and the total pressure drop was determined by graphical integration. The pressure drop came out to be 2.32 psi. In actual practice, the liquid refrigerant has been leaving the condenser appreciably sub-cooled, which means that condensing must have been completed in less than the 20 foot length. Therefore, the total pressure drop would then be less than the 2.32 psi estimated.

TABLE 8

CONDENSER EXTRUSION DESIGN DATA

		PROPOSED EXTRUSION DESIGN # 431-27
EXTRUSION LENGTH, FT.		20
VAPOR SIDE	Surface Area, sq. ft.	24.7
	Cross Sectional Area, sq. in.	0.600
	Equivalent Diameter, in.	0.1622
	Entrance Vapor Velocity, ft/sec.	58
	Reynolds Number	60,000
	Entrance Pressure Drop psi/ft.	0.33
COOLANT SIDE	Surface Area, sq. ft.	54.7
	Cross Sectional Area, sq. in.	1.315
	Equivalent Diameter, in.	.1604
	Coolant Velocity, ft./sec.	1.4
	Reynolds Number	1206
	Total Pressure Drop, psi	1.1

Figure 15 contains a drawing of the proposed extrusion design and condenser assembly. This condenser design was not carried through to the construction of a die for making the extrusion. This was beyond the scope of the program.

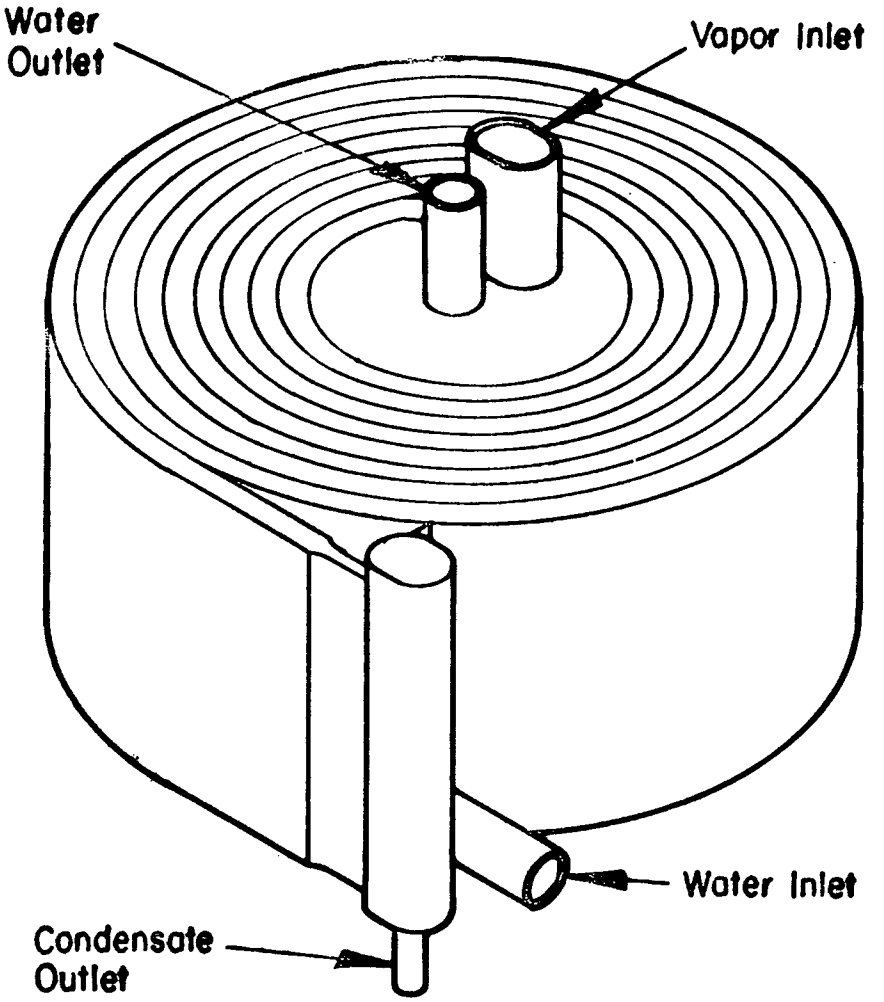

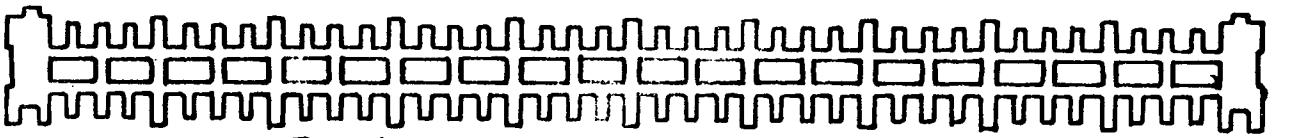

Exrusion Cross Section

Figure 15 Condenser and Extrusion 431-27

EVAPORATOR/PRECOOLER DEVELOPMENT

Since the R-123, as received, contained approximately 2.8% by weight R-113, which is a higher-boiling refrigerant, it was difficult to access the performance of the evaporator/precooler combination. The presence of the R-113 increased the evaporating temperature of the liquid refrigerant throughout the evaporator, but increasingly toward the bottom of the evaporator, and entering the precooler. Consequently, the load on the precooler was artificially increased. A further effect of this impurity on the system was to force an increase in the chilled water inlet temperature in order to evaporate more of the refrigerant in the evaporator. Other than this impurity effect, there were no other problems with the evaporator.

As the performance of the system as a whole was improved, the quantity of refrigerant generated was increased. The pressure drop of the liquid refrigerant through the precooler became excessive at these higher flow rates. A new precooler was designed and built for the system. This design incorporated two, parallel, helically-wound coils for flow of the condensed refrigerant, and an enlarged shell cross-sectional area for reduced pressure drop on the vapor side.

At the same time, as the precooler was being built, a new evaporator was constructed for use with Test Unit No. 3 with R-123/ETFE. This evaporator design was taken from the advanced production prototype program for R-133a/ETFE. It is a spirally-wrapped extrusion with the refrigerant evaporating on the shell side and chilled water on the tube side. The extrusion development program is discussed in another volume. Figure 16 contains a view of the evaporator/precooler combination.

These two components were installed on Test Unit No. 3, and the unit was run under varying evaporator temperatures. Both the evaporator and precooler performed well under all test conditions. More detailed test results are contained in the following section.

FINAL STATUS AND PERFORMANCE OF TEST UNIT NO.3 WITH R123/ETFE

As component developments became available, they were installed on Test Unit No. 3 for trial. Eventually all major components were updated. One of the major objectives of the program was to improve the baseline performance and viability of the absorption heat pump system through the use of low pressure refrigerants. The purpose of the component development phase was to support this objective. Consequently, individual components were tested and improved, but the final criteria by which they were judged was overall system performance. Performance in the heating mode was the primary indicator of system improvement. Water temperatures were held to 95°F inlet and a minimum of 125°F outlet. The final system configuration can be found in Figure 17. These components were operated over a series of evaporator temperatures in the heating mode. Figure 18 is a graph representing the performance of this hardware during the tests.

As can be seen from Figure 18, the performance of the system at 60,000 Btuh input comes close to meeting the performance objective. At this point in the program, R-123a became available, and testing with R-123 was stopped. Figure 18 represents the final results achieved with the R-123/ETFE pair.

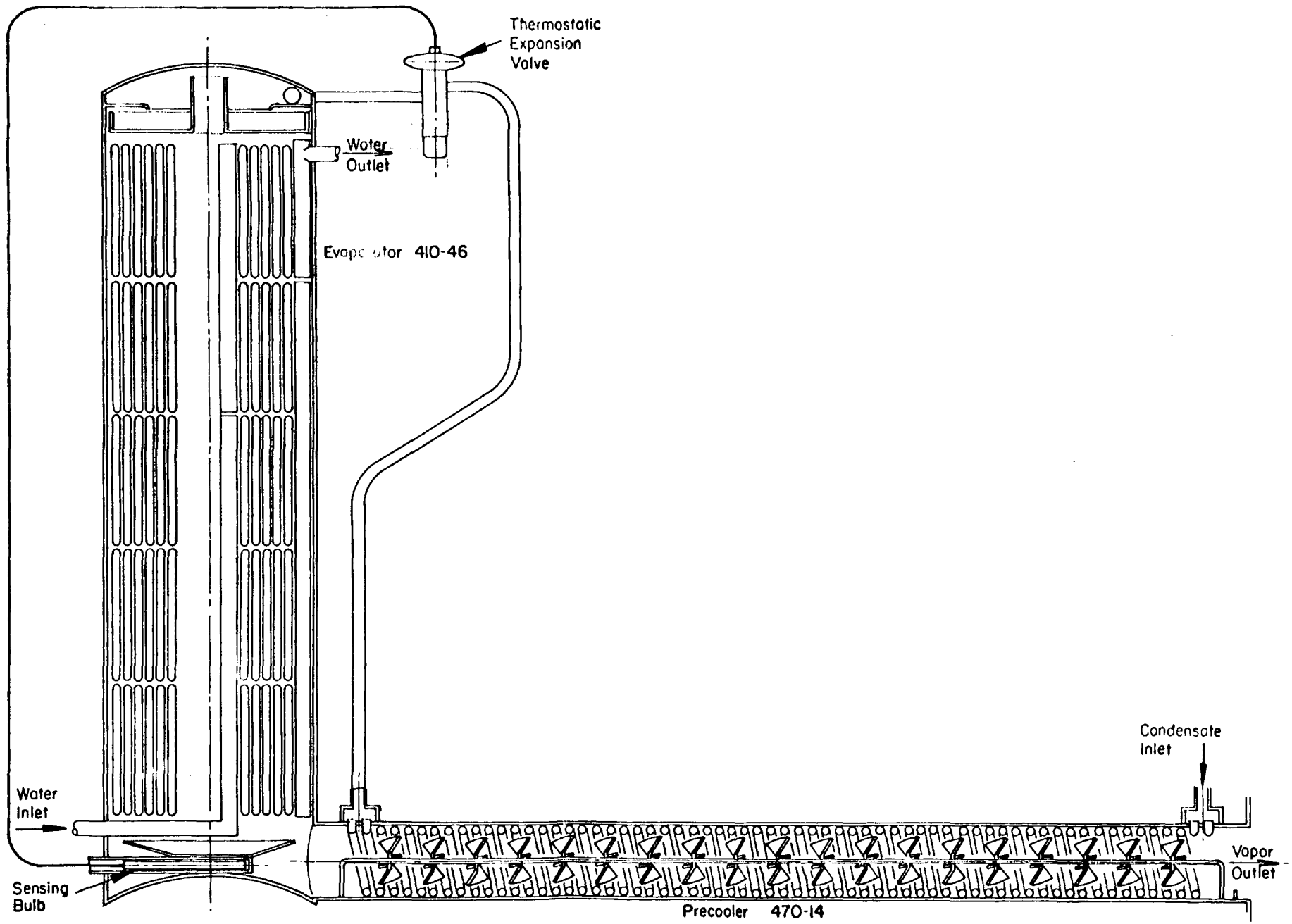

Figure 16 Evaporator / Precooler

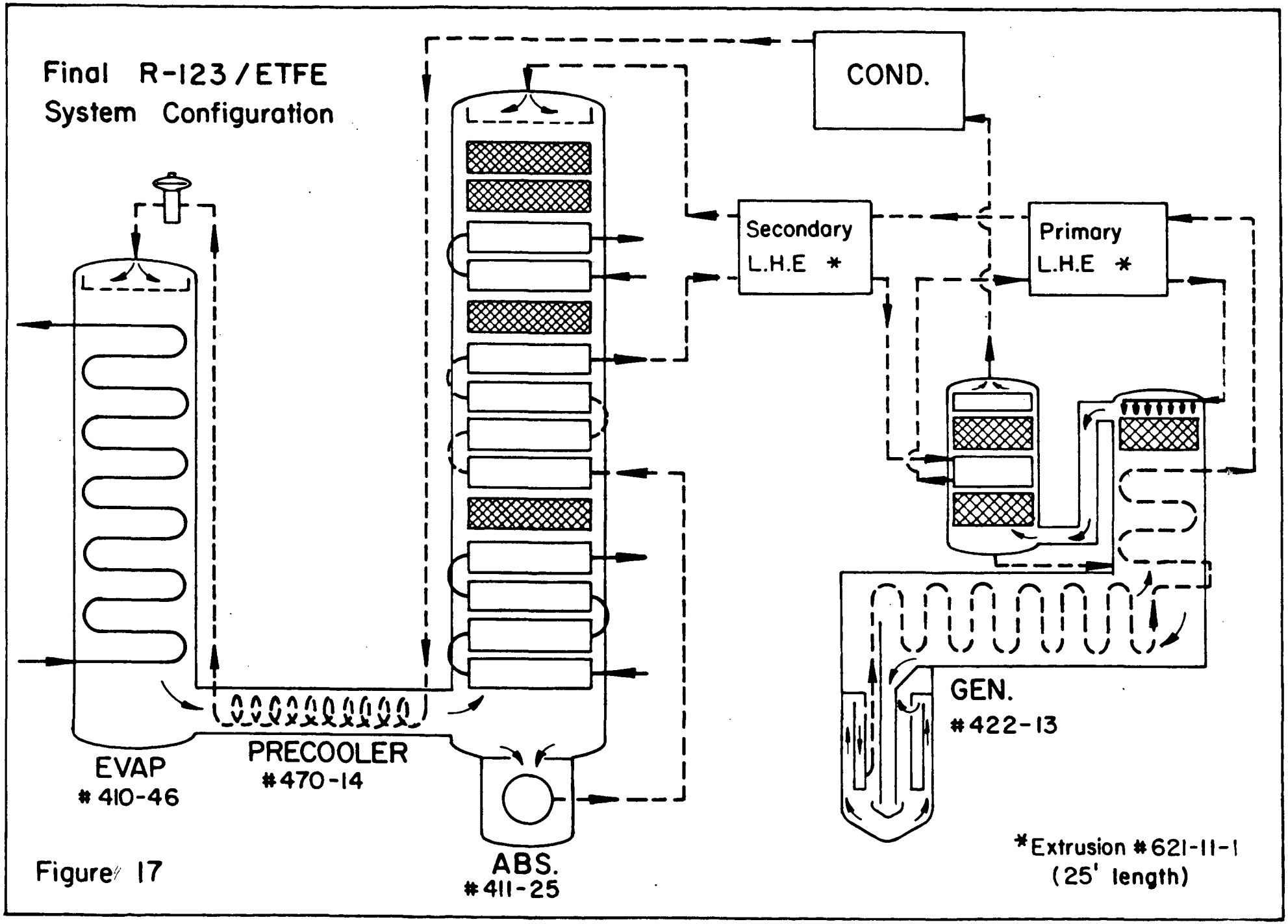
Final R-123/ETFE
System Configuration
COND.
Secondary
L.H.E *
Primary
L.H.E *
EVAP
410-46
PRECOOLER
#470-14
ABS.
#411-25
GEN.
#422-13
*Extrusion #621-11-1
(25' length)

Figure 17

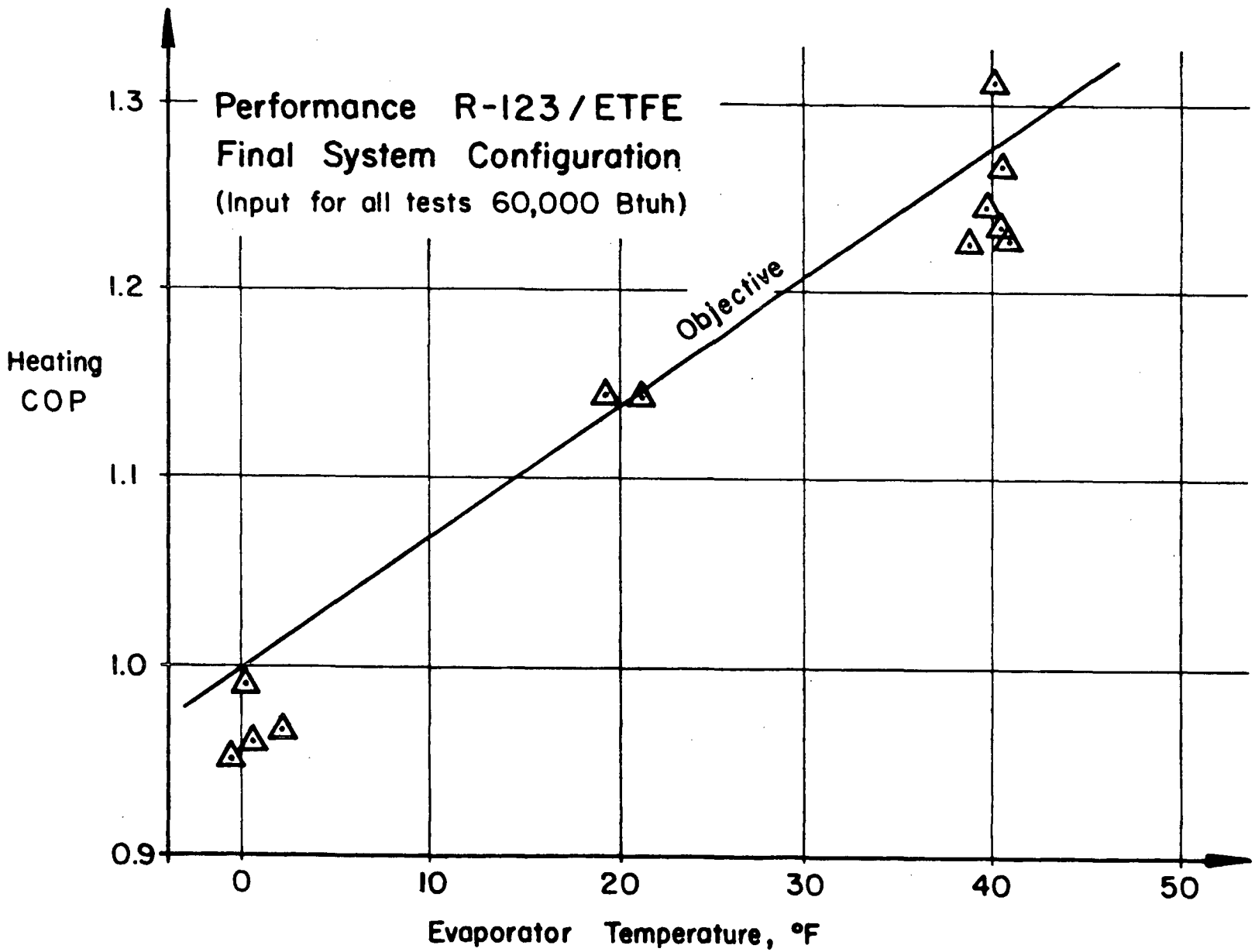
Performance R-123 / ETFE
Final System Configuration
(Input for all tests 60,000 Btuh)
Objective
Heating COP
1.3
1.2
1.1
1.0
0.9
0
10
20
30
40
50
Evaporator Temperature, °F

Figure 18

TEST AND DEVELOPMENT WITH R-123A/ETFE

INTRODUCTION

As soon as sufficient quantities of R-123a became available, the R-123/ETFE working fluids were discharged from Test Unit No. 3. The unit was flushed with fresh ETFE and recharged with R-123a and ETFE. Those components which could not easily be flushed while on the unit were removed and drained and flushed with ETFE and then re-installed on the unit.

The reason for the choice of R-123a was one of long-term stability. Tests conducted on the two refrigerants, R-123 and R-123a, indicated that R-123a was superior to R-123 in terms of stability. Experimentally the preference for R-123a related to purity. There are only small differences in thermophysical properties between the two refrigerants.

REFRIGERANT PURITY

As mentioned earlier in this report, refrigerant R-123 contained 2.8% R-113 as an impurity. The presence of R-113 masked the performance of the rectifier/reflux sections of the generator and of the evaporator/precooler combination, as well broadening the evaporation temperature range. Since the purity of the R-123a was greater than 99% by weight, the performance of the components and system could be assessed more accurately.

After Test Unit No. 3 was re-charged with R-123a/ETFE, the refrigerant purity leaving the condenser was measured for several runs with a gas chromatograph. This purity was compared to the purity obtained from the pressure-temperature-composition equation in the computer. Table 9 contains the results of this investigation.

TABLE 9

REFRIGERANT PURITY

EVAPORATOR TEMPERATURE (°F)	INPUT (BTUH)	G.C. REFRIGERANT CONCENTRATION (WT.%)	COMPUTER REFRIGERANT CONCENTRATION (WT. %)
21.3	72,849	96.66	96.64
39.8	72,364	99.35	99.20
40.4	60,722	99.30	98.97

Two conclusions can be drawn from these results. The first is that the computer equation for finding refrigerant concentrations from temperature and pressure adequately represents the actual concentrations in an operating unit. The second is that the refrigerant purity at lower evaporator temperatures was too low. This was checked for several other low evaporator temperature runs by means of condenser inlet temperature and high side pressure and found to be true in general. The absorber vapor inlet temperature for these runs was also low, which serves to substantiate the conclusion. This problem was addressed by component modification which is discussed later in this report.

PERFORMANCE

Test Unit No. 3 was run through a series of tests in order to document the performance of R-123a/ETFE. The hardware configuration was identical to that in Figure 17. Heating mode COP is plotted versus evaporator temperature in Figure 19. The performance of R-123a/ETFE is nearly identical to that of R-123/ETFE in the same hardware. There appears to be a possible negative effect of the lower refrigerant purity at the 0°F conditions.

In order to improve vapor purity at low evaporator temperatures, the rich liquid circuiting was changed so that cooler rich liquid would flow through

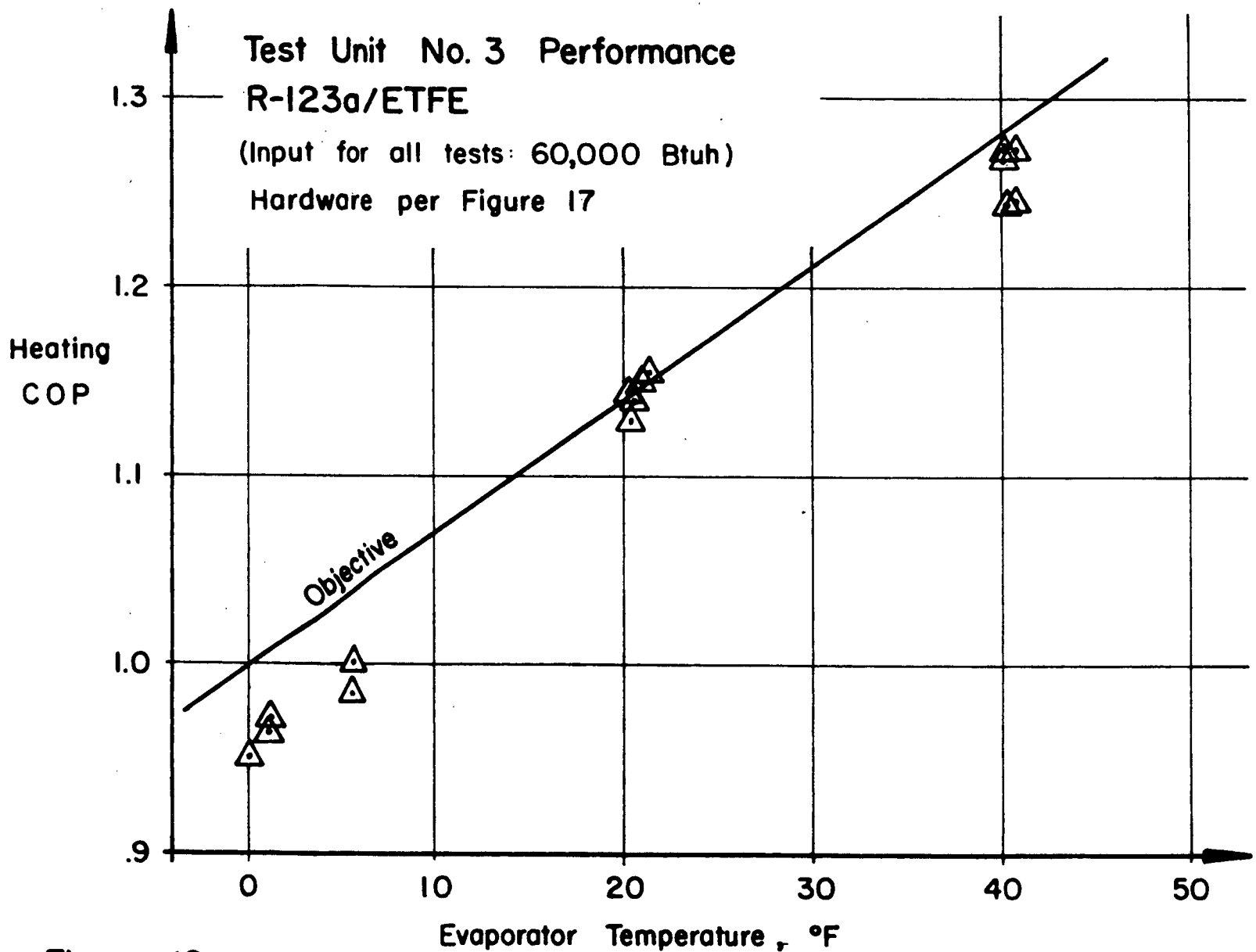
Test Unit No. 3 Performance
R-123a/ETFE
(Input for all tests: 60,000 Btuh)
Hardware per Figure 17
Heating
COP
1.3
1.2
1.1
1.0
.9
Objective
0
10
20
30
40
50
Evaporator Temperature, °F

Figure 4-19

the rectifier. This change can be seen in Figure 20. Other than this circuiting change, the unit was the same as in Figure 17.

By putting cooler rich liquid through the rectifier, the load on the rectifier increased, and the vapor purity increased also. At a 0°F evaporator temperature and 60,000 Btuh input, the vapor purity, measured by temperature and pressure, was 97.4%, somewhat better. More testing was done up to 40°F evaporating temperatures, and the vapor composition increased to over 99%. Absorber vapor inlet temperatures were increased over the previous tests, and the chilled water approach to evaporator inlet temperature improved also.

Another benefit of the changed rich liquid circuiting was a slight increase in performance over the entire evaporator temperature range. This was due to better heat recuperation in the rich liquid. The performance of the unit with this modification can be found in Figure 21. The performance of the unit in the heating mode meets or exceeds the goal over most of the evaporator temperature range.

More detailed information concerning the performance of Test Unit No. 3 with R-123a/ETFE can be found in Table 10. The data contained in Table 10 cover some of the points contained in Figure 21 over an evaporator temperature range from 40°F to 0°F. Some of the highlights of this data include, the close approach between the absorber rich liquid outlet and the cooling water inlet temperature, the consistently high absorber vapor inlet temperature, and the ability to achieve a close approach between the evaporator temperature and the chilled water outlet temperature. The flue efficiency and insulation effectiveness average about 80% for this series of tests. This indicates efficient combustion and sufficient insulation playing an important part in achieving the performance objective. Higher COP's would have been expected at the high flue efficiency indicating there is room for improvement in the thermodynamic cycle.

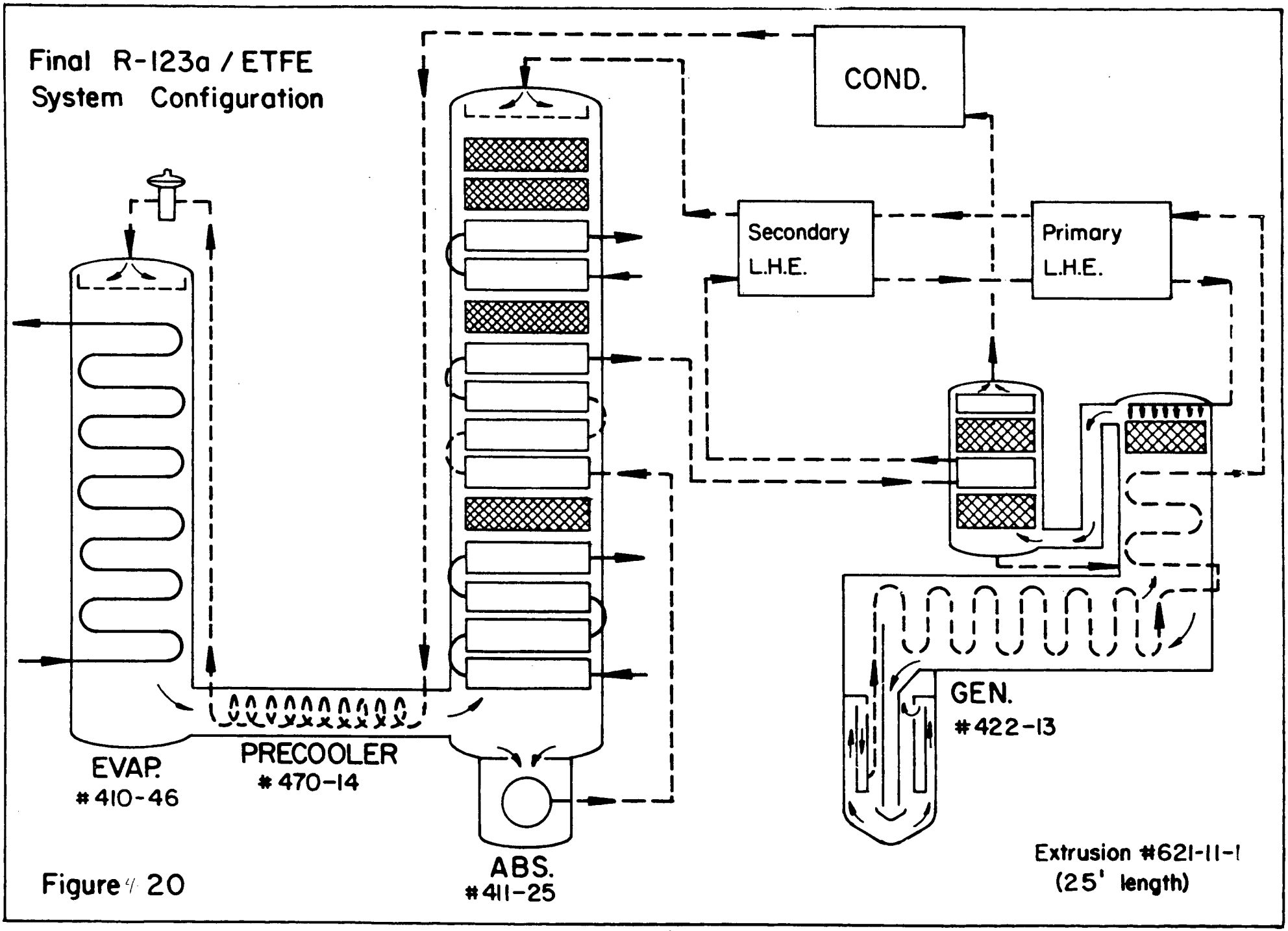
Final R-123a / ETFE
System Configuration
COND.
Secondary
L.H.E.
Primary
L.H.E.
EVAP.
#410-46
PRECOOLER
#470-14
ABS.
#411-25
GEN.
#422-13
Extrusion #621-11-1
(25' length)

Figure 20

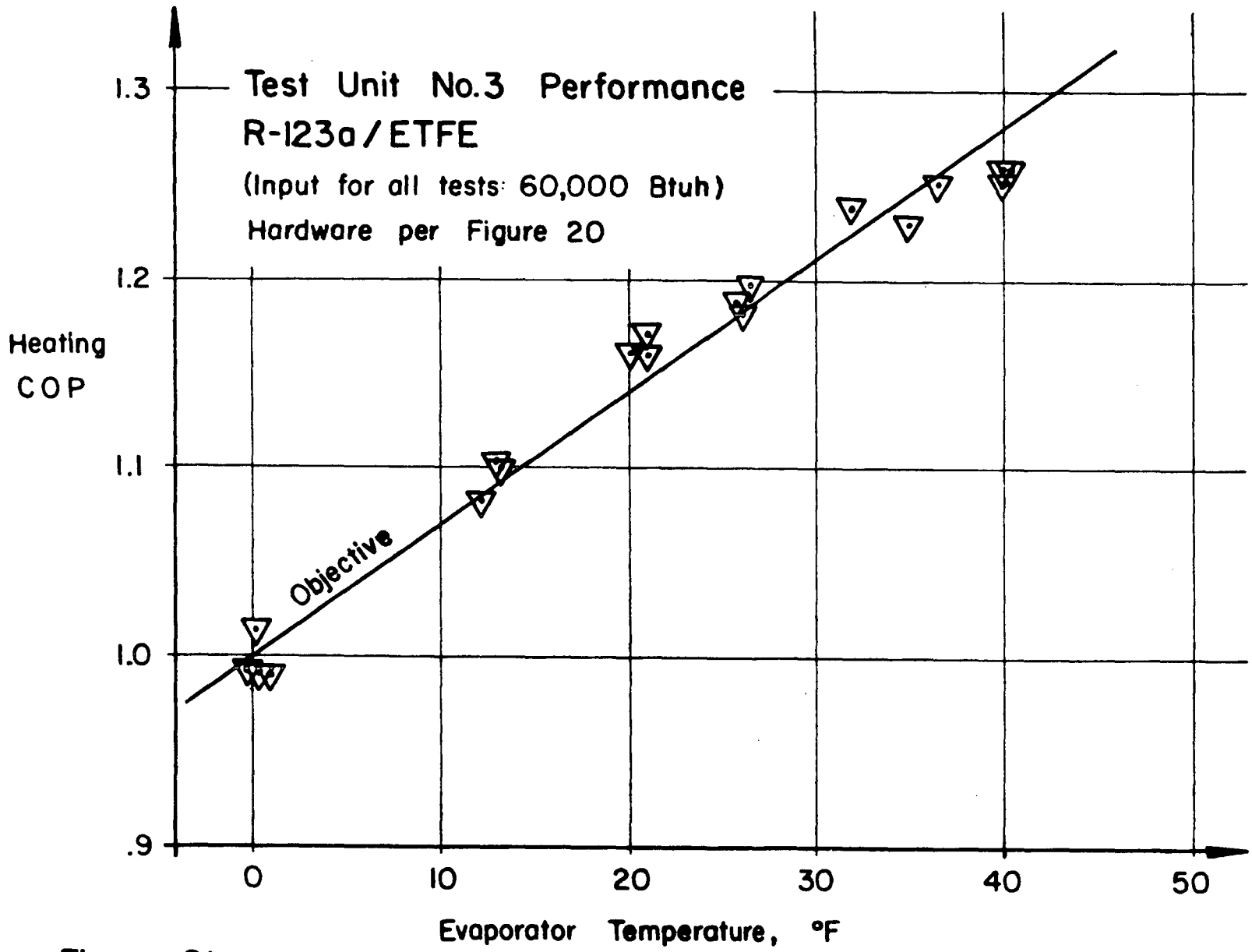
Test Unit No.3 Performance
R-123a / ETFE
(Input for all tests: 60,000 Btuh)
Hardware per Figure 20
Objective
Heating
COP
1.3
1.2
1.1
1.0
.9
0
10
20
30
40
50
Evaporator Temperature, °F

Figure 4-21

TEST UNIT NO. 3 PERFORMANCE WITH R-123a/ETFE

TABLE 10

Test Number		56	57	58	52	53	54	43	44	45	48	50	51
COP Heating		1.262	1.258	1.266	1.241	1.232	1.253	1.159	1.172	1.162	.993	.995	1.016
COP Cooling		.448	.443	.452	.420	.435	.440	.360	.366	.357	.221	.218	.218
Evaporator Temperature (°F)		39.8	40.2	40.0	32.1	35.0	36.5	20.8	20.8	20.0	.07	-0.3	0.2
Flue Efficiency and Insulation Effectiveness (%)		81.4	81.5	81.4	82.0	79.8	81.3	79.9	80.5	80.5	77.2	77.8	79.8
Weak Liquid Flow Rate (lb/hr)		832	714	919	842	853	776	1042	1042	1093	1201	1180	1221
Refrigerant Flow Rate (lb/hr)		419	419	413	396	405	410	338	338	335	210	210	213
Cooling Water Temperature (°F)	IN	95.4	94.9	95.2	94.8	95.7	95.1	95.5	95.9	95.0	95.4	95.6	95.1
	OUT	126.6	126.0	126.0	125.6	126.3	126.2	127.3	127.7	126.5	128.4	127.9	126.8
Pressure (psia)	HIGH	30.0	29.5	30.0	29.2	29.5	29.5	28.7	29.0	28.8	27.5	26.7	26.5
	LOW	5.0	5.3	5.2	4.2	4.5	4.7	3.1	3.1	3.2	1.8	1.8	1.8
Input (Btuh)		61569	61569	60560	61398	61398	61398	59877	59836	60380	59650	59790	60039
Absorber Rich Liquid Outlet Temperature (°F)		103.6	103.4	103.9	102.9	103.8	103.2	102.7	103.2	102.1	101.2	101.4	100.7
Vapor Purity (Wt.%)		99.3	99.1	99.4	99.0	99.1	99.1	98.9	98.8	98.9	97.7	97.4	97.5
Absorber Vapor Inlet Temperature (°F)		94.1	92.4	95.8	91.5	92.6	92.0	90.4	90.9	89.5	81.0	81.3	80.0
Chilled Water Approach To Evaporator Temperature (°F)		4.0	3.6	4.5	11.9	8.6	7.0	19.0	17.6	13.4	8.0	9.9	6.2

The performance at 72,000 Btuh input was not as good as the performance at 60,000 Btuh. This would seem to say that even more heat and mass transfer area is required before full output can be expected from the system. All components, except the absorber, meet the 40 inch overall height limitation. More development is required before the absorber will be able to meet the height limitation.

OTHER RELATED WORK

FLOW CONTROL VALVES

Refrigerant Thermostatic Expansion Valve Design

Due to the immediate availability of R-123, the design of a refrigerant flow control valve was undertaken for this refrigerant. R-123a was not received till late in the program so no design was formulated for R-123a. The properties of the two refrigerants are so similar that only small changes are anticipated in the valve design. The purpose of the refrigerant flow control valve is to maintain a flow of refrigerant that will keep the evaporator surface (refrigerant side) substantially fully utilized but not over-supplied.

In the case of compression systems, this purpose is accomplished by means of a thermostatic expansion valve. (TEV) Such a valve is shown schematically in Figure 22. The flow of refrigerant is from the condenser at pressure P1, through the valve, and to the evaporator at pressure P2. A diaphragm at the top serves to control the position of the valve plate as a function of: the pressure P2, below the diaphragm; the pressure P3, above the diaphragm; and the spring force F. The pressure P3 above the diaphragm is supplied by the vaporizable liquid charge in the bulb. This bulb is located at the exit end

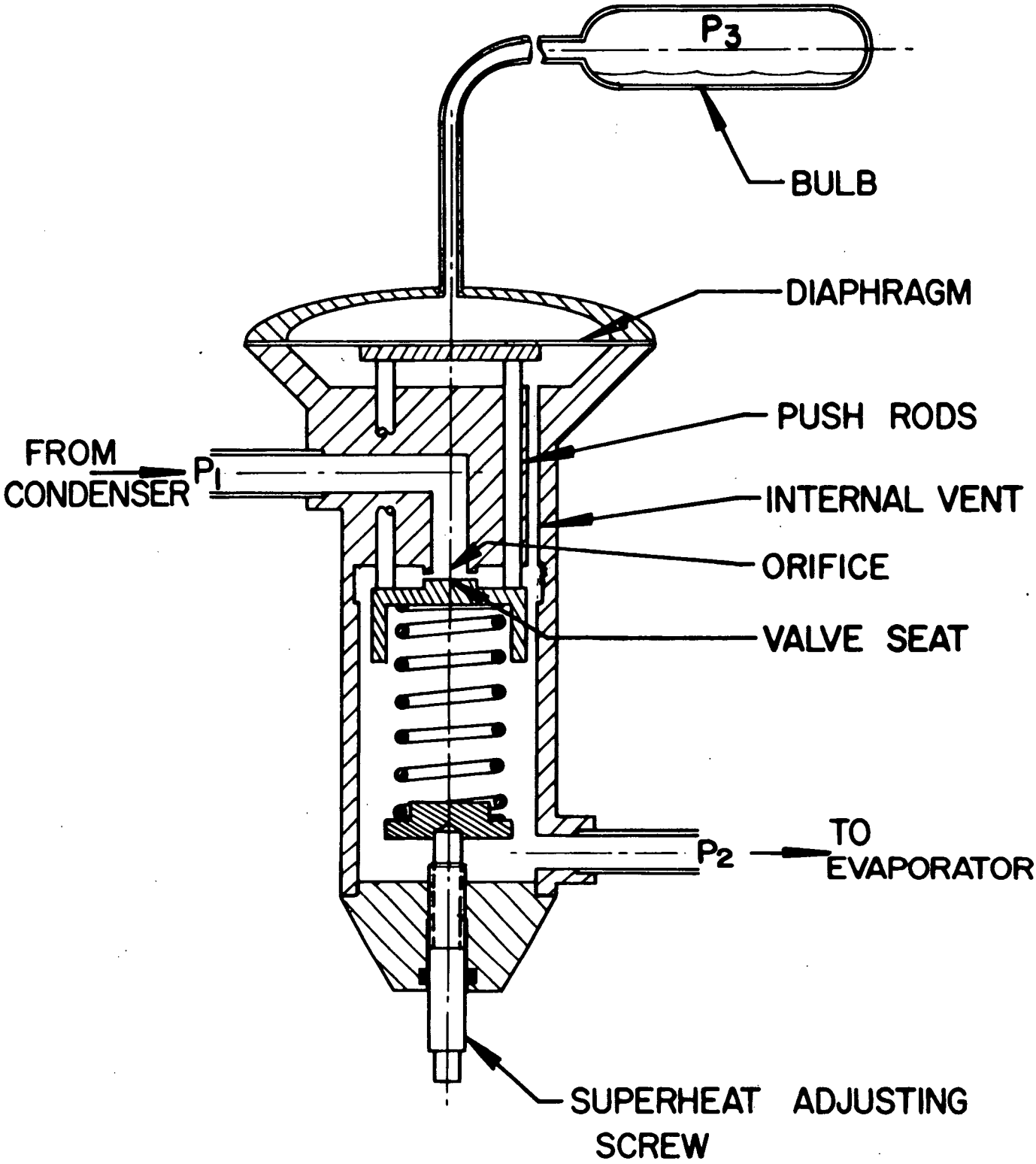

Figure 22 Thermostatic Expansion Valve

of the evaporator. If not enough refrigerant is being supplied to the coil, superheated vapor will warm the control bulb; the increase in pressure P3 will tend to open the valve. If too much refrigerant is being supplied, liquid refrigerant will cool the control bulb; the decrease in P3 will tend to close the valve. Thus, by a proper setting of the spring force, one can maintain the degree of superheat desired--thus, the term "constant superheat valve."

The application of the TEV to an absorption system is not quite so simple. In the case of the compression system, the refrigerant is pure and has a definite boiling point at the evaporator pressure; the control bulb senses either the cold temperature of the liquid refrigerant or a warmer temperature corresponding to superheated vapor. In the case of the absorption system, the refrigerant is not pure but contains small amounts of the absorbent. As the refrigerant flows through the length of the evaporator, the refrigerant evaporates, but very little of the absorbent evaporates. Consequently, the boiling point will rise as the concentration of absorbent rises. This effect is significant throughout the evaporator but becomes quite large near the exit. The boiling points of the refrigerant solution as increasing amounts of the refrigerant evaporate are plotted in Figures 23 and 24. These boiling points are plotted for different degrees of purity of refrigerant entering the evaporator, and for evaporator temperatures of 40°F and 0°F, respectively. There is always liquid leaving the evaporator, so the control bulb senses a liquid temperature which changes rather slowly as the amount of refrigerant evaporation changes, rather than a rapid change from the cold temperature of evaporating liquid refrigerant to the warm temperature of superheated vapor. Consequently, the pressure changes above the diaphragm are lower in magnitude and occur more gradually than in the case of the compression system. Although

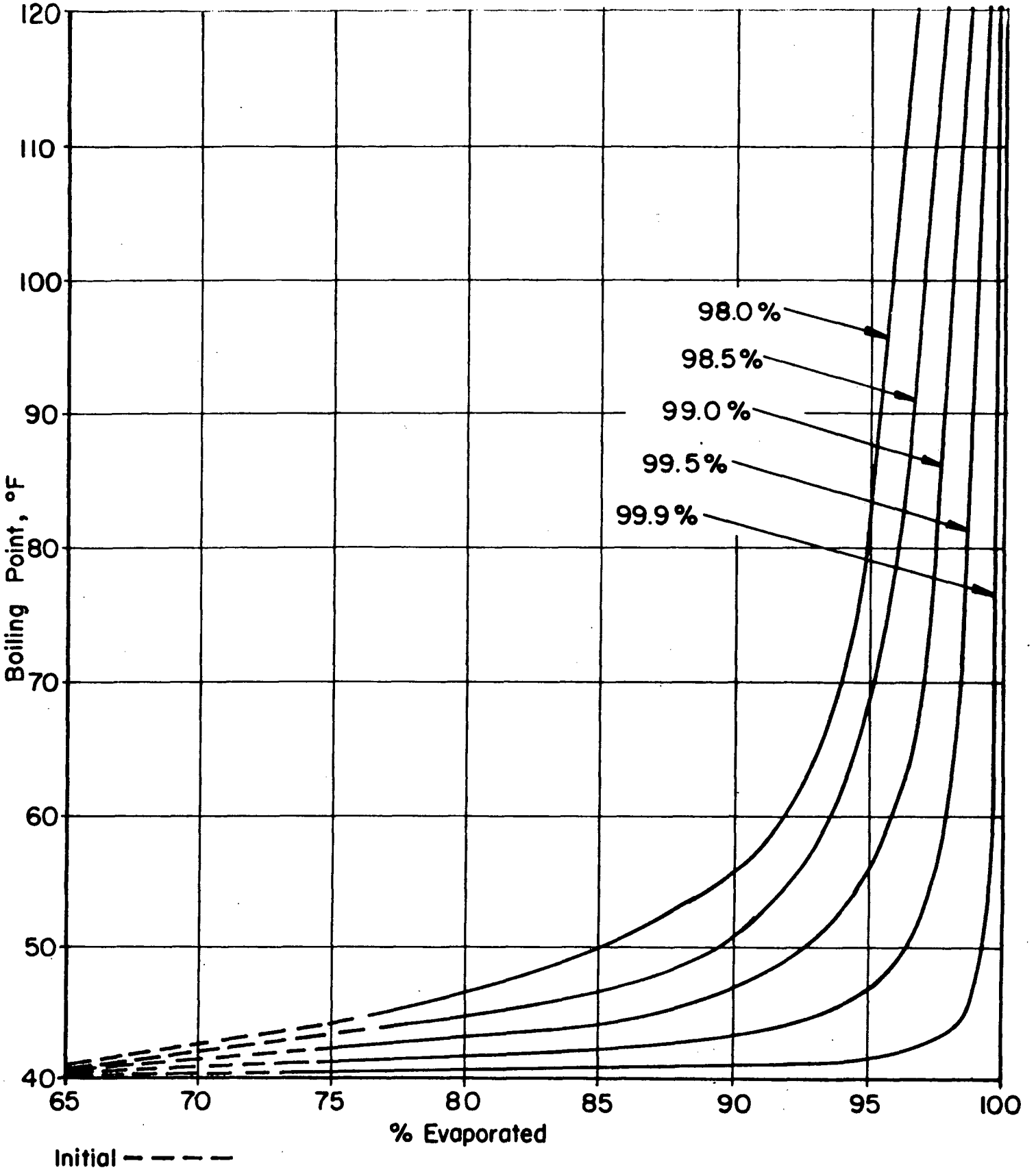

Figure 23 Effect of Refrigerant R-123 Purity on Evaporator Temperature, at $T_E = 40°F$, P=5.805psia.

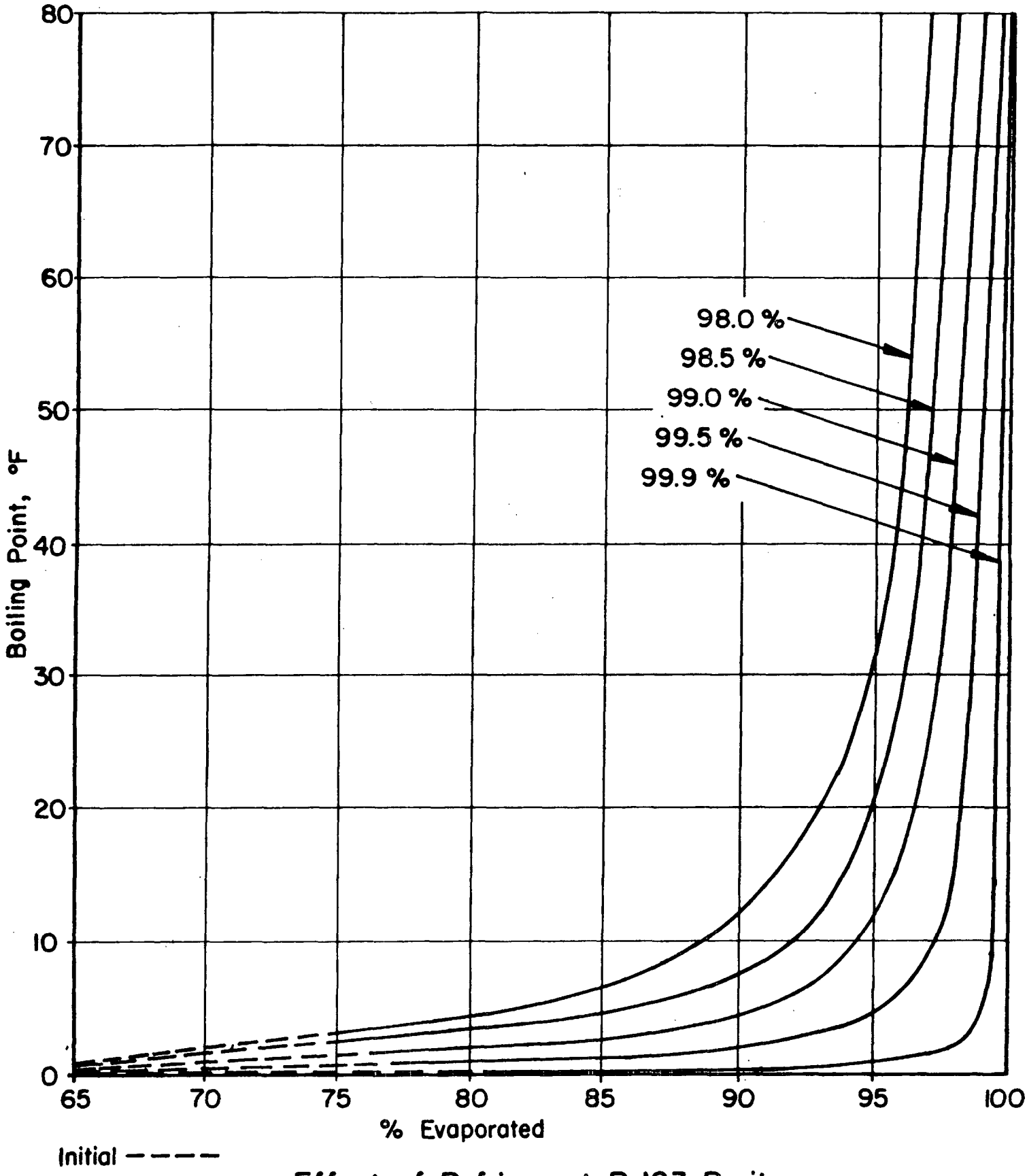

Figure 4-24 Effect of Refrigerant R-123 Purity on Evaporator Temperature, at $T_E = 0°F$, $P = 1.984$ psia.

we continue to call the temperature difference between the inlet and outlet evaporator temperatures "superheat", the term is really a misnomer.

In order to hold the total temperature difference between the evaporator and air being cooled to a reasonable value, it is desirable to keep the superheat as low as possible. On the other hand, the selection of the degree of superheat must take into account the purity of the refrigerant. A study of the curves of Figure 23 will show that, for any given refrigerant purity, the amount of refrigerant that must pass through the evaporator unevaporated will increase as the degree of superheat decreases. For any given air temperature, the evaporator temperature can increase as the degree of superheat is decreased; the higher evaporator temperature will enable the system to have a higher capacity. However, as the degree of superheat decreases, the amount of unevaporated refrigerant leaving the evaporator increases, and this loss reduces system capacity. So the selection of the degree of superheat at which to operate is a factor in maximizing unit capacity.

Actually, the loss caused by the unevaporated refrigerant leaving the evaporator is not as serious as indicated because the precooler reclaims the major portion of the refrigerating capacity of the "purge liquid", the term given to this stream of unevaporated liquid leaving the evaporator. The ability of the precooler to reclaim the refrigerating capacity of the purge liquid is not unlimited. It is limited by the heat content of the refrigerant condensate coming from the condenser. Since the sensible heat capacity for the fluorochloro-carbon refrigerants is relatively high compared to the latent heat of evaporation, the precooler capacity can be rather high.

Observations of breadboard unit operation led to the arbitrary decision that the degree of superheat should be below 10°F for a 40°F evaporator and

below 4°F for a 0°F evaporator; design calculations given subsequently are based on these numbers.

The choice of a liquid for the control bulb is critical. In order to keep the spring force reasonably low, the selected liquid must not have a vapor pressure appreciably higher than that of the refrigerant. In order to keep the valve always under positive control, the vapor pressure of the bulb liquid must not go below the evaporator pressure at the lowest superheat setting. For the superheat ranges selected above, filling the bulb with the refrigerant used in the system resulted in attainable spring forces.

The design of a TEV requires the calculation of the orifice size, spring rate and valve motion for a given superheat, evaporator temperature and refrigerant flow rate. The orifice discharge coefficient was determined experimentally for a range of valve plate settings, and an average value was used. The application of a comercially available TEV to absorption systems thus requires the choice of the proper refrigerant for the control bulb, the spring with the correct spring rate, and the orifice size. For a given orifice size and control bulb charge, the choice of spring will determine the superheat at the two extremes of evaporator temperature. These calculations were made for a commercially available valve, a Sporlan model Y-821. The spring rates required are presented graphically in Figure 25.

From this graph, one can select the spring needed to produce various combinations of superheat at the two extreme evaporator temperatures. For example, if one desires to operate with a superheat of 7° at a 40°F evaporator and a superheat of 2.5° at a 0°F evaporator, he would locate a point on the 2.5° ordinate halfway between the 6° and 8° lines and read a spring rate of 28.5 lbs. per 1/10" on the abscissa.

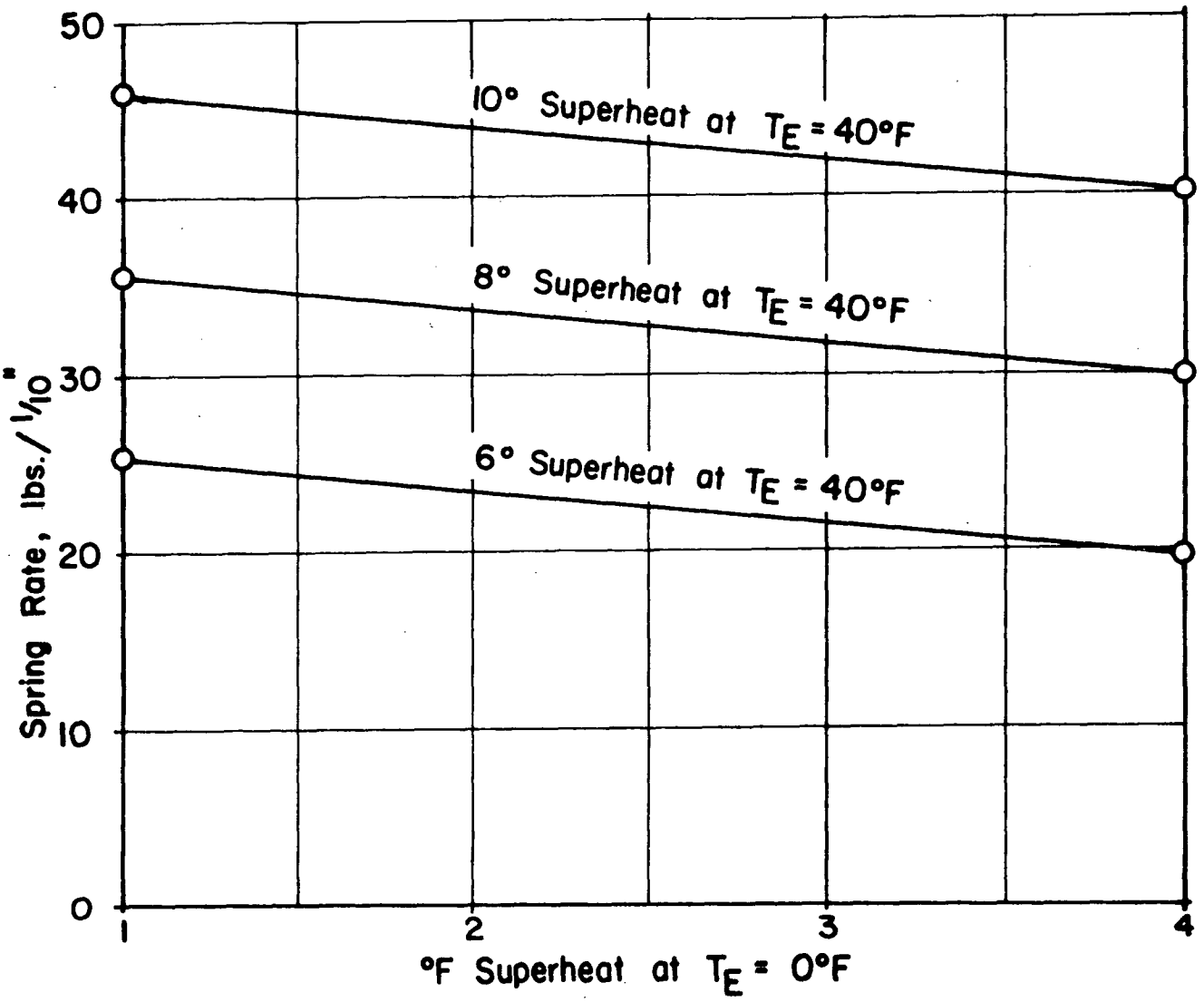

Figure 25 Spring Rates for Various Degrees of Superheat - T E V

T E V for R-123/ETFE System
Bulb Charge: R-123
Sporlan Y-821

Earlier in this report, it was pointed out that the application of the TEV to the compression system differs from the application to the absorption system in that the refrigerant in the compression system is pure, whereas the refrigerant in the absorption system contains an appreciable amount of the absorbent. The presence of the absorbent raises the boiling point near the exit of the evaporator and, in effect, forces the absorption system to operate with relatively low values of "superheat", thus making the valve action more critical.

There are other differences:

1. Compression systems contain a lubricant so that the sliding parts of the TEV are not completely unlubricated, whereas the TEV in the absorption system is completely unlubricated. This lack of lubrication makes friction a more significant problem.

To reduce friction between the sliding parts, such parts have been coated with Teflon or made from graphite. These moving parts are the push-pins and the pin-carrier, the upper end of which is the valve plate. In one design, the push-pins and the pin-carrier were coated with Teflon. In a second design, the guide holes around the push-pins were fitted with graphite bushings, and the pin-carrier was made from graphite. No discernable difference in operation was noted, but there might be some question as to the life of the Teflon coating.

2. Most compression systems such as air conditioners, food coolers, etc., use refrigerants such as R-21, R-22, R-502, etc. These refrigerants operate at quite high pressures compared to R-123, and the rates of change of pressure with temperature are high. For example, the $\Delta p/\Delta t$ values at 0°F are as follows:

Refrigerant	$\Delta p/\Delta t$ psi/°F
12	0.514
22	0.826
123	0.060

This low rate of change of pressure with temperature coupled with the low superheats required makes it difficult to build a valve with the required response. The elimination of friction becomes more important.

Another problem that has been found is stiffness and/or uneven movement of the diaphragm. For example, the power heads, made up by Sporlan for the Y-821 valves for use with R-133a were charged with R-21. The pressures for R-21 at 70°F and 32°F are as follows:

Temperature	Psia
70	23.16
32	10.34

Thus, if the head is removed from the valve and exposed to atmospheric pressure, and the bulb is cooled from 70°F to 32°F, the diaphragm should move from one extreme to the other. This test was made on a number of heads with the following results:

1. Some diaphragms moved through the total stroke.
2. Some heads moved through part of the stroke; the remainder of the stroke required a nudge.
3. A few heads showed no motion until the diaphragm was pushed, and then the diaphragm moved through the stroke all at once.
4. In nearly all cases, there was a clicking noise as the diaphragm moved through its stroke. This sound indicated that the diaphragm was "oil-canning" in going from one extreme to the other.

This irregular response to relatively large pressure changes would play havoc with responses to small pressure changes such as are encountered in trying

to control superheat to a few degrees. Earlier in this program, irregular valve operation was blamed entirely on friction between the moving parts. It is likely that the poor valve operation was also caused by the irregular diaphragm response. The irregular response is stated by the manufacturer to be due to the warping effects of welding the diaphragm to the housing. Those effects are large at the low pressures being used, as contrasted to the pressures of R-22 and R-12 for which the valves are designed.

One way by which irregular diaphragm response, oil-canning, etc., can be eliminated is by substituting a bellows for the diaphragm. Friction can be eliminated by eliminating sliding parts. With these thoughts in mind, a TEV was designed that should overcome previous difficulties. This frictionless valve is shown in Figure 26. To eliminate irregular diaphragm motion, a bellows was substituted for the diaphragm. To eliminate friction between the push-pins and the guide holes, the pins are mounted rigidly in a block attached to the top of the bellows, and the holes through which the pins move are large enough that there is no contact with the pins. To eliminate friction between the pin-carrier and the valve body, the pin-carrier is replaced by a perforated Tefon diagram. The valve plate is attached to the diagram which holds the valve plate centered but allows up-and-down motion.

A metal bellows having an active area of 3.63 square inches was selected for this design. The design calculations were repeated, and the results are given in Figure 27. This design should provide acceptable control for the R-123/ETFE system. The design should be modified for refrigerant R-123a, however. The valve could not be built within this program.

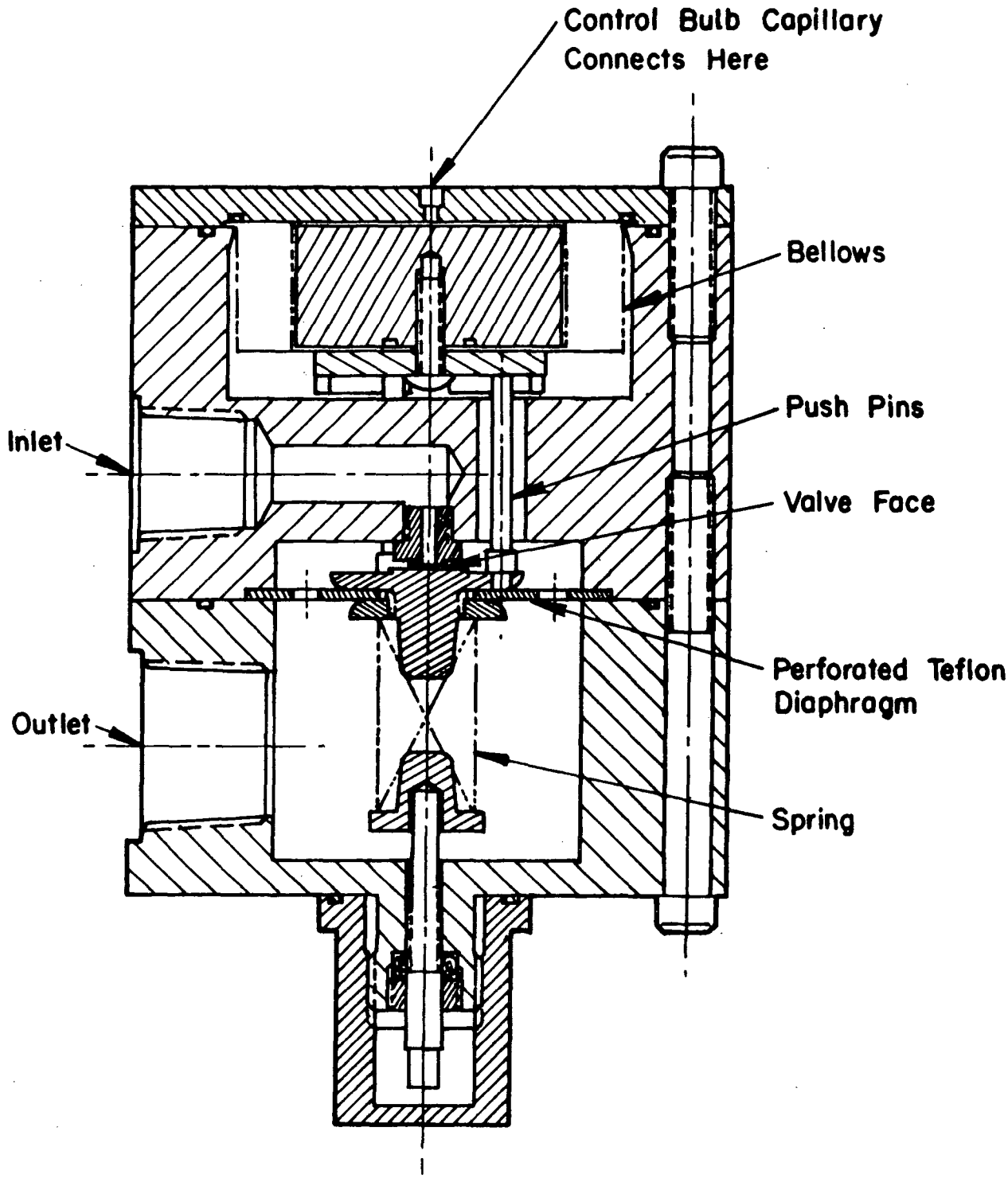

Figure 26 Thermostatic Expansion Valve - Bellows Design

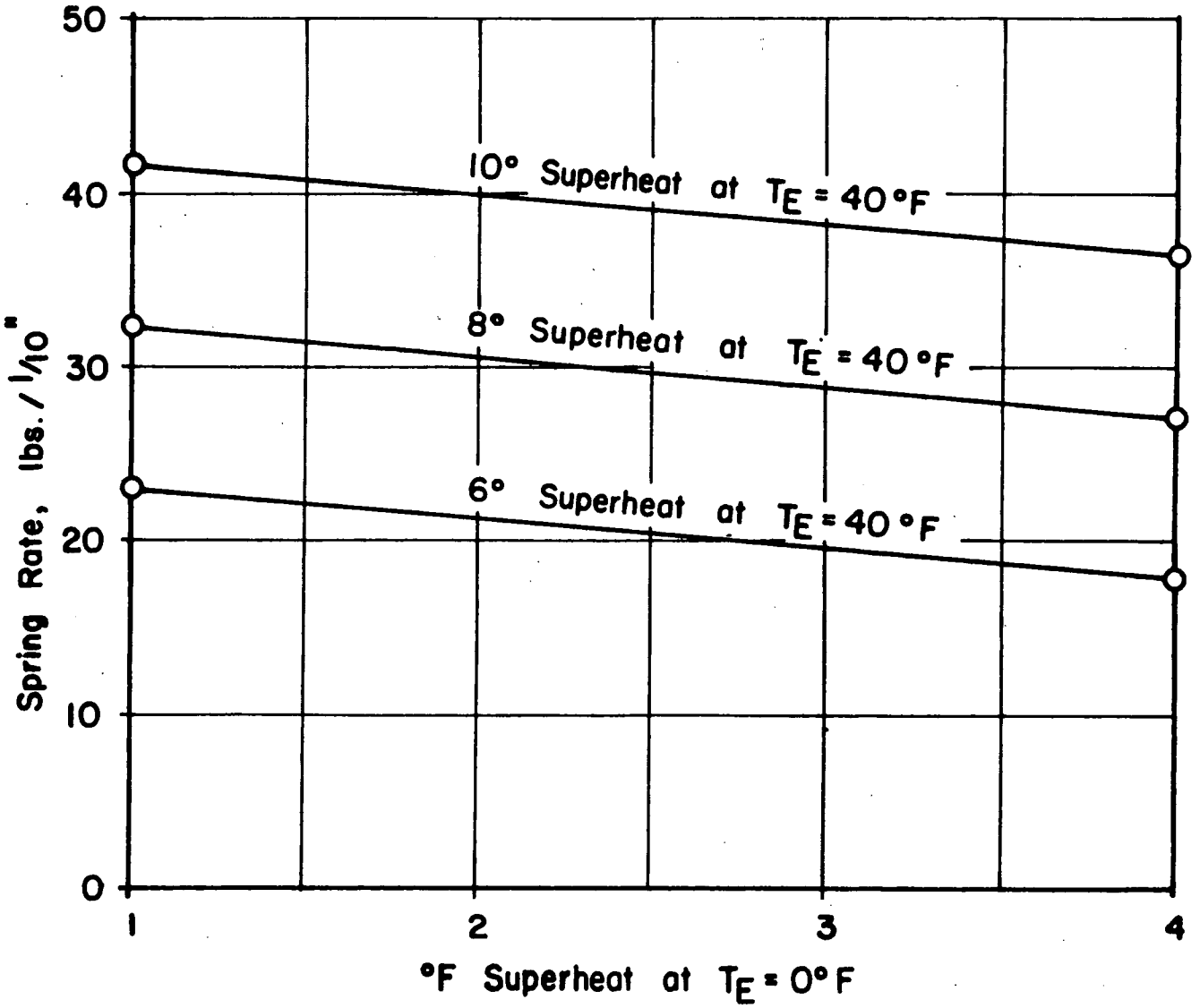

Figure 27 Spring Rates for Various Degrees of Superheat – Bellows TEV

TEV for R-123/ETFE System
Bulb Charge: R-123

Weak Liquid Expansion Valve

The purpose of the weak liquid control valve in an absorption refrigeration system is to control the flow of absorbent solution to the absorber. The driving force on the solution is the pressure difference between the generator and the absorber. The generator pressure varies as a function of condenser temperature and the amount of refrigerant flowing. The refrigerant flow at a 40°F evaporator is about twice that found at a 0°F evaporator. The absorber pressure is a function of the evaporator temperature. There is also a pressure drop through the liquid heat exchanger, filter, and connecting lines. Consequently, the pressure available at the control valve varies widely, being least at the 0°F condition and increasing as the evaporator temperature increases.

Since the rich liquid concentration decreases as the evaporator temperature decreases, the relative circulation, defined as the weight of weak liquid circulated per unit weight of refrigerant supplied to the evaporator, must increase. Thus, the greater weak liquid flow is required when the available pressure drop across the valve is the least; therefore, the valve must adjust accordingly.

An examination of the data taken on Test Unit No. 3 charged with R-123/ETFE resulted in the following conditions as being typical of the requirements.

TABLE 11

WEAK LIQUID CONTROL VALVE REQUIREMENTS

EVAPORATOR TEMP. (°F)	PRESSURE AHEAD OF CONTROL (PSIA)	ABSORBER PRESSURE (PSIA)	PRESSURE DROP ACROSS VALVE (PSI)	WEAK LIQUID FLOW (LB/HR)
40	25	5.80	19.20	900
0	15	1.98	13.02	1400

These figures represent a more or less average situation. It's not necessary to have exact values since the flow at any condition can be adjusted by the adjustment screw, and the flow ratio can be controlled by spring selection.

The basic valve design devised in the R-133a/ETFE program is that of an "automatic expansion valve" used in the refrigeration industry to maintain a constant evaporator pressure. Such a valve is depicted schematically in Figure 28. A diaphragm serves to make the valve sensitive to pressure; in this case, the space above the diaphragm is open to the atmosphere (assumed to be at a constant pressure), and the space below the diaphragm is subjected to low-side pressure (i.e. absorber pressure). Thus, as the absorber pressure decreases, the valve will tend to open, which is the required direction of operation, i.e. more flow at lower evaporator temperatures. The rate at which the valve opens is determined by the net spring rate. The spring forces and spring rates may be calculated by equating the upward and downward forces; at the control point these two forces must be equal.

The nature of the orifice in this control valve is somewhat unique; actually, there are two orifices in series. The first is a circular opening (the port against which the valve plate moves) which has a fixed diameter. It constitutes a resistance to flow and reduces the pressure available at the control orifice. The control of flow is actually accomplished by the second orifice, which is the cylindrical space between the port and valve plate. The area of this orifice is varied by moving the valve plate toward or away from the port. It was assumed that such a cylindrical orifice would follow the general equation:

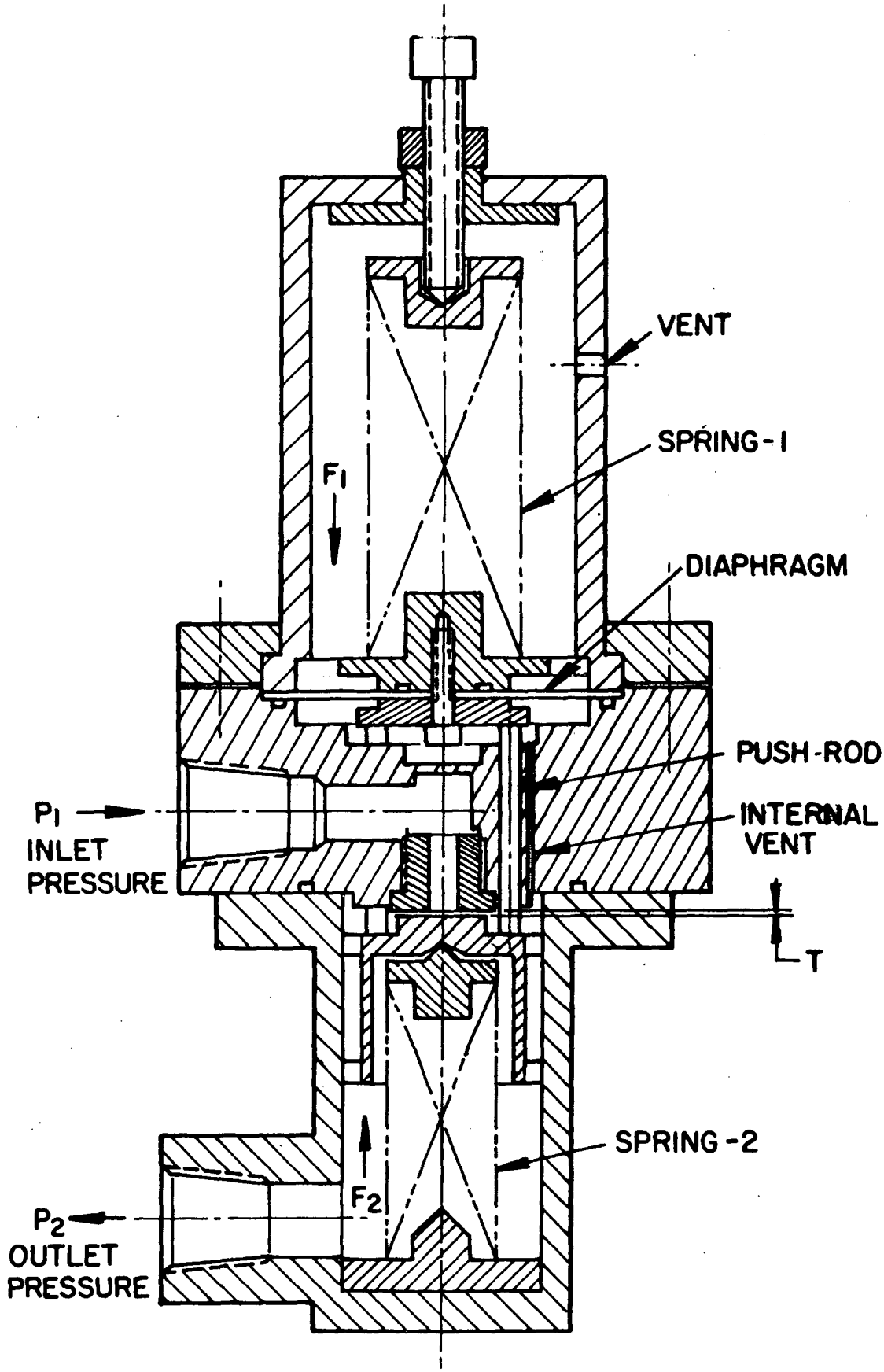

Figure 28 Weak Liquid Expansion Valve

$$V = C\sqrt{2gh}$$

Where V = velocity (ft/sec)
C = orifice coefficient
g = gravitational constant (ft/sec2)
h = head (ft)

To check this assumption, an orifice of this design was set up so that the opening, t, could be precisely varied. Flow rates and pressures at various t settings were measured, and values for C were calculated. It was found that C varied from about 0.7 to 0.9 over a range of t values. However, in the relatively narrow range under consideration for weak liquid flows, the value for C was fairly constant at 0.82. Consequently, this value of C for the cylindrical orifice was used in all subsequent calculations. As a result, the orifice area can be expressed in terms of t for a fixed diameter, and t is directly the up-and-down motion of the valve plate assembly which, in turn, is the motion which the springs must accommodate.

The calculation procedure is as follows; for both evaporator extremes, the pressure drop through the fixed orifice is calculated, which in turn yields the pressure drop to be dissipated by the variable orifice. The opening t is calculated from the motion required. Once the motion and orifice pressure drops are known for both extremes, a diaphragm size is chosen, and the net spring rate required is calculated. If the net spring rate is reasonable, the next step is to select a pair of springs such that the difference in spring rates corresponds closely to the calculated value.

These calculations were carried out for the R-123/ETFE system. A valve was designed, the orifices sized, and the net spring rates were calculated. This control valve was not built or tested, but, the design is quite similar to the weak liquid expansion valves already in use on the R-133a/ETFE systems.

SOLUTION PUMP

The development of the hermetic regenerative-turbine pump for use with R-133a/ETFE has been detailed in Report No. 83-5, titled Development of a Residential Gas Fired Absorption Heat Pump, and will not be repeated here. That pump was developed to slightly better performance than the objectives of 400 watts power input to the motor while pumping 3.5 gpm (1800 lb/hr) of R-133a/ETFE solution through a pressure rise of 50 psi. Pumps were also operated to 50,000 hours of continuous run and 230,000 to 240,000 cycles of on-off operation without significant wear.

The R-123a/ETFE pair, due to the better solubility characteristics and lower vapor pressure of R-123a, required a solution flow of only 2.5 gpm (1300 lb/hr) and a pressure rise of 30 psi for a comparable 3 ton unit. The theoretical pumping power was therefore some 43% of that for R-133a/ETFE.

While the specific speed for the R-123a/ETFE pump is higher than for R-133a/ETFE, it is still low, about 240. The regenerative-turbine pump type thus remained a good choice, and was picked for modification and development to the new fluid pair. The power input objective was set at 200 watts, 50% of the objective for R-133a/ETFE, because the efficiencies of pumps and motors both tend to drop as the sizes are reduced.

A regenerative-turbine pump was designed for the 1300 lb/hr flow, 30 psi pressure rise and 200 watt power input, using the design concepts developed in the R-133a/ETFE program. The turbine wheel diameter was reduced 15%, to 2.3 inches, and the blades and raceway adjusted in proportion. A 1/4 hp PSC motor of 65% - 70% efficiency over the operating range was obtained from Emerson Motors. The blades and raceway were then adjusted experimentally till wattages

in the 195-200 range were being obtained. Final modifications then produced a performance of 181 watts at 1390 lb/hr flow at a 30 psi pressure rise. The performance curves are shown in Figure 29. Table 12 lists the test data over a range of conditions.

TABLE 12

PERFORMANCE OF SOLUTION PUMP FOR R-123a/ETFE

PRESSURE PSI	FLOW RATE LB/HR	WATTS	MOTOR & PUMP EFFICIENCY %	APPROXIMATE PUMP EFFICIENCY
20	1690	170	17.3	26.2
30	1390	181	20.0	30.4
40	1140	200	19.8	30.1
50	890	219	17.7	26.8
60	640	235	14.2	21.5

The performance objectives were considered achieved at that point and the pump development was stopped. No life testing of the R-123a/ETFE pump had been planned. These pumps should have even less wear than was found during the life test of the R-133a/ETFE pumps; a number of wear improvements had been made since those life test pumps were built and started in operation in 1976. On the efficiency side, it appears probable that additional development can improve the pump efficiency. A power input of 150 watts would seem a suitable objective.

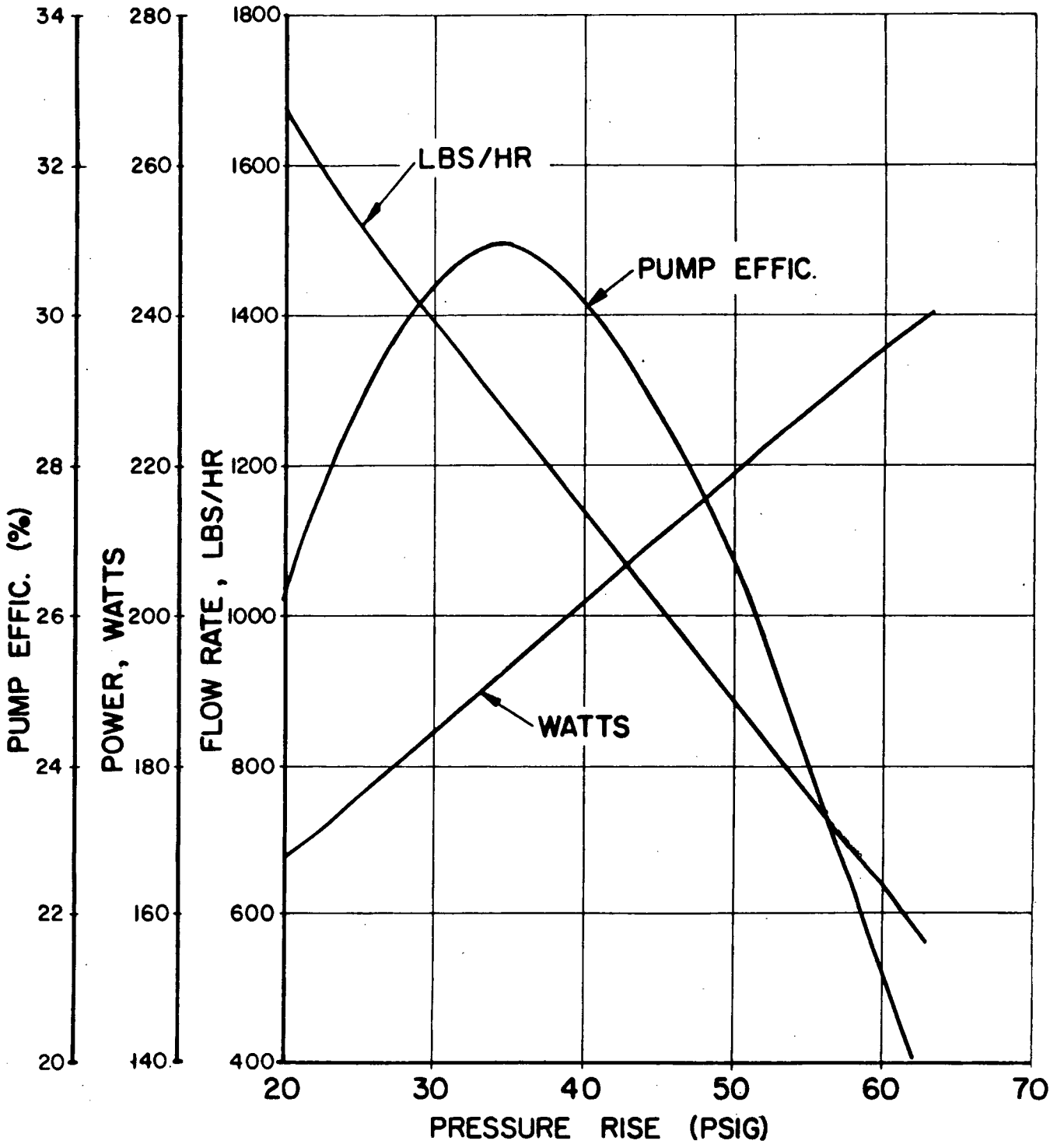

Figure 29 Performance of Solution Pump for R-123a/ETFE

CONCLUSIONS

The overall viability and the baseline performance of the absorption heat pump system was improved through the utilization of a non-toxic low pressure refrigerant. Refrigerant R-123a was chosen as the preferred low pressure refrigerant for use with the absorbent ETFE. Due to availability, the isomer R-123 was used for the majority of the development and testing. It was found that the pair R-123/ETFE should be capable of performing as well as R-133a/ETFE. After a series of hardware developments, the pair R-123a/ETFE was made to perform slightly better than the R-123/ETFE pair. The heating mode performance goals were met at somewhat reduced inputs on the test unit.

The heat and mass transfer coefficients of the R-123/ETFE and R-123a/ETFE pairs were found to be lower than those of R-133a/ETFE. Larger surface areas were found necessary in the generator, absorber and liquid heat exchanger. It has become evident that absorption heat pump hardware must be designed specifically for the refrigerant/absorbent pair to be used. Even though the low pressure refrigerants (R-123 and R-123a) were very similar chemically to their moderate pressure counterpart (R-133a), there was enough difference in the thermophysical properties of the solutions to require significant changes in hardware in order to achieve similar levels of performance.

SECTION 5.0

ECONOMIC ANALYSIS

Annual Performance and Cost Analysis

SUMMARY

This task is an extension of the work previously performed under a subcontract by United Technologies Research Center, the results of which were presented in Volume IV of the interim report. The basic data regarding house, weather and system characteristics were developed as part of this earlier work and used again as the basis for this task.

The primary objective of this task was to identify the performance and cost levels at which an absorption heat pump system will compete with existing and future conventional heating and cooling systems. The criterion used as a basis for comparison was annualized life cycle cost (ALCC). ALCC takes into consideration all costs incurred over the lifetime of the system and assigns them an economic value based on the timing of the cost. These economic costs are then spread evenly over the lifetime of the system and discounted appropriately. The resulting mumber gives a good indication of the true economic average annual costs of owning and operating the system.

The systems chosen for comparison with the absorption heat pump were the electric heat pump and the gas furnace/electric air conditioner combination. Two levels of technology were examined. The first level, classified as 1985 technology, is comprised of the prototype performance level absorption heat pump and efficient current versions of the electric heat pump and furnace/AC combination. The second level classified as 1990 technology, is comprised of the advanced development absorption heat pump and "advanced" current versions of the electric heat pump and furnace/AC combination.

Comparisons of all systems were based on the energy requirements of a standard reference house in seven selected cities. Characteristics of the reference house and details regarding the weather in each of the cities can be found in Volume IV of the interim report. Calculations were made to determine the total annual gas and electricity usage for each system in each city and the cost associated with this usage was computed using local gas and electric prices.

ALCC was computed for both the elctric heat pump and furnace/AC. The ALCC of these systems was then compared to a range of ALCC values computed as a function of manufacturing cost for the absorption heat pump for each city and for both technology levels. This comparison yields a break-even manufacturing cost which the absorption heat pump must meet in order to equal or better the ALCC of the two competing systems. In addition to these base case scenarios a number of sensitivity analyses were performed to determine what equipment modifications or marketing considerations would be advantageous.

Results of the analysis lead to the following conclusions which are all based on ALCC comparisons:

(1) The absorption heat pump is competitive with or superior to the electric heat pump in 4 of 7 cities using 1985 technology and 5 of 7 cities using 1990 technology.

(2) The absorption heat pump is competitive with or superior to the gas furnace/electric AC combination in only 2 of 7 cities using 1985 technology and 6 of 7 cities using 1990 technology.

(3) In only one city examined, New York, is the absorption heat pump competitive with or superior to <u>both</u> competing systems using 1985 technology. Using 1990 technology, the absorption heat pump is also competitive in Madison, Omaha, Nashville, and Fresno.

(4) The two most important factors in determining the competitive standing of the absorption heat pump in a particular market area are the heating to cooling load ratio and the electric to gas price ratio. The two factors must be taken in combination but generally each must have a value of 3 or greater.

(5) Of the eight different scenarios examined as part of the sensitivity analysis, the greatest impact was obtained by adding the domestic hot water heating load to the base load. For this scenario, the average breakeven manufacturing cost increased by 50% over the base case. However, this scenario was only a first approximation of the domestic hot water option and costs not considered here may reduce its calculated advantage.

(6) Because the addition of hot water heating capability adds an entire new set of technical and marketing problems, the best method of increasing the potential market areas of the absorption heat pump is to accelerate the development of the advanced absorption heat pump technology. When the advanced (1990) technology for the absorption heat pump was compared to the 1985 technology of the competing systems, the average breakeven manufacturing cost increased by 45% and five of the seven cities became competitive market areas.

INTRODUCTION

An important ingredient in the overall absorption heat pump development program is an assessment of the market potential for the product. While there are many variables that go in to any estimate of future sales, the economic benefits which would be realized by the owner of an absorption heat pump is obviously an important one. Successful commercialization of the gas fired absorption heat pump depends largely on its ability to operate more efficiently and economically than other alternative heating/cooling systems while not imposing too great a first cost premium. Additionally, the market areas where the absorption heat pump can compete successfully must constitute a market large enough to support the required business investment.

The analysis performed as part of this task focused exclusively on the economic comparison of a homeowner using an absorption heat pump to heat and cool his home versus using an alternative heating/cooling system. The objectives of this task were as follows: To determine

1) how well the absorption heat pump fared in an economic comparision with competing systems;

2) what levels of cost and performance are required to make the absorption heat pump competitive;

3) which general geographic areas represent potential future markets for the absorption heat pump; and

4) what possible technical improvements and/or changes in market conditions would enhance the potential market for the absorption heat pump.

This analysis is a follow-up to work performed previously under a subcontract by United Technologies Research Center (UTRC) and reported in Volume IV of the interim report. The same basic data which was used in the UTRC analysis regarding weather, reference house characteristics, and system

specifications was used in this analysis as well. This analysis focuses solely on the economic comparision, however, and incorporates some more recent data and some different assumptions. This analysis is also aimed at identifying levels of cost and performance required to make the absorption heat pump competitive.

GENERAL APPROACH

The approach used in this analysis was designed to simulate the purchase decision of the homeowner to the greatest extent possible. It was assumed that the homeowner would desire heating and cooling and therefore require a system that would do both. Also, local weather conditions and gas and electric prices were used in order to more closely simulate real conditions in a real place as opposed to average conditions in a place that doesn't exist.

City Selection

There were seven cities selected for this analysis: New York, Nashville, Fresno, Fort Worth, Madison, Medford and Omaha. They were selected to provide a range of climatic and geographic conditions and good size potential markets as well. These cities also had good weather data available. See Volume IV of the interim report for more details regarding weather condition for each of these cities.

System Alternatives

In addition to the absorption heat pump (AHP), the two other systems examined were the gas furnace/central electric air conditioner combination (Furn/AC) and the electric heat pump (EHP). Two levels of technology were used. The first level, designated as 1985 technology, consists of the AHP operating at current (1982) production prototype specifications compared against efficient models currently available for the Furn/AC and the EHP. The second level of technology, designated 1990 technology, consists of the

advanced development absorption heat pump and advanced versions of currently available efficient models for the Furn/AC and the EHP. Basic performance specifications for all the systems are shown in Table 1.

Use of the designations 1985 and 1990 for the two technology levels does not mean to imply that the technology used in each comparison will not be available until the respective year designated. These two years were used only as convenient reference points to compare technology at the time of likely commercialization of the AHP (1985) and future advanced technology (1990).

Reference House

Computation of building loads depends not only on the weather but obviously also on the building itself. For this analysis an 1800 ft^2 ranch style home was used as the reference house in all cities for all scenarios. See Volume IV of the interim report for more specifics regarding the characteristics of the house.

Annual Energy Consumption

Energy consumption for each of the respective systems was calculated using the bin method. For each city, the total house load, the instantaneous house load, and the hours for each bin were calculated. A sizing factor, calculated to match the house load with the appliance capacity, was assigned to each system. Gas and electric usage were then computed for each system as follows.

Absorption Heat Pump - For each temperature bin, the AHP capacity was compared to the instantaneous house load and a cycling factor was determined. The cycling factor was taken from the curve shown in Figure 1. The cycling factor for each bin was then multiplied times the COP for each bin to determine the net COP for each bin. The AHP COP is given in Figures 2, 3, 4 along with the respective capacities. Gas consumption is then calculated by

dividing the total load in each bin by the respective net COP and summing to calculate annual usage. At the same time, hours of operation are calculated by dividing the total load in each bin by the respective capacity. Hours of operation are then summed and multiplied by the power required to determine the electrical usage.

Gas Furnace - It was assumed that the gas furnace operated at a net COP equal to 100% of the rated efficiency at all temperature levels with a constant capacity. Gas consumption was therefore calculated by simply dividing the total annual heating load by the COP. Similarly, hours of operation were calculated by dividing the total annual heating load by the capacity. Electrical usage was then computed by multiplying the hours of operation times the power required.

Electric Air Conditioner - A cycling factor for each cooling bin was determined by comparing the capacity for each bin with the respective instantaneous load. See Volume IV of the interim report for a curve showing the cycling performance of the AC and the EHP. Electrical usage is then computed by dividing the load in each bin by the EER times the cycling factor for each bin.

Electric Heat Pump - As with the absorption heat pump and the air conditioner, a cycling factor for each temperature bin was determined by comparing the instantaneous load in each bin to the capacity for each bin. In the heating mode, any load that cannot be met with the heat pump capacity is met with electric resistance heat having a COP of 1.0. The electrical usage in the heating mode is then computed by dividing the total load in each bin by the COP times the cycling factor for each bin and converting the BTU's to KWH. Consumption in each bin is then summed to obtain annual consumption. In the cooling mode, electrical usage is computed by dividing the load in each bin by the EER times the cycling factor for each bin and summing.

Gas and electric consumption for each system in each city are given in Tables 2 - 22.

Annual Operating Cost

The annual operating cost for each system was calculated by multiplying the amount of gas and electricity used by the respective price of each in each year considered in each city. Base prices used for both gas and electricity were actual 1980 prices in effect in each city. Table 23 lists the base prices. Escalation rates for both the gas and electric price were treated as variables in the computer program and could be input in any value at run time by the user. For base case scenarios, an annual escalation rate of 12% for gas and 10% for electric was used. The higher escalation rate for gas is meant to account for the pending decontrol of natural gas prices which is scheduled to will take place in 1985.

Annualized Life Cycle Cost

Annualized life cycle cost (ALCC) was chosen as the criterion for comparison. ALCC is a good measure because it takes into consideration all cash outlays and their timing over the life of the project and makes the comparison on a consistent basis. It also has the advantage of being able to compare proj-ects of unequal lives. The formula for calculating ALCC is given below.

$$ALCC = \left[\frac{d\,(1+d)^t}{(1+d)^t - 1} \right] \left[C_i + \sum_{n=1}^{t} \frac{AC_n}{(1+d)^n} \right]$$

where d = discount factor

t = project life

c_i = installed cost

AC = annual operating cost

ALCC was calculated using the annual operating cost computed as explained above and the installed cost for each system as listed below.

Table 21

Installed Purchase Cost
(1980 $)

	1985 Technology	1990 Technology
Gas Furnace /AC	2716	3280
Electric Heat Pump	2958	4139

A general inflation rate of 8% was used to bring 1980 costs up to 1985 or 1990 installed costs.

The ALCC for the absorption heat pump was computed as a function of manufacturing cost since obviously no actual manufacturing experience exists and estimates as to the anticipated manufacturing cost of the AHP must be assumed to incorporate some degree of inaccuracy. Computing ALCC as a function of manufacturing cost also has the advantage of establishing a cost target for the AHP which it must meet to be competitive. A factor of 262.5% was used to convert manufacturing cost to installed cost so as to provide a consistent basis for comparison.

In the base case scenarios, the discount factor used to compute ALCC was 10%, the general inflation was 8% and it was assumed all systems examined would have a life of 15 years.

DISCUSSION OF RESULTS

As explained earlier, ALCC was chosen as the criterion for comparing the AHP to other systems. It is unlikely that a homeowner would do a complete ALCC analysis prior to purchasing a heating and/or cooling system, however, there is a growing trend for homeowners to consider all costs over the life of the system, not just the purchase price. While not a perfect criterion, no single one is, ALCC is used in this analysis to identify good market areas and show the relative performance of the AHP.

In order for the AHP to be judged competitive in a particular market area, it must be competitive when compared to all alternative systems. This analysis focuses on the comparison with the gas furnace/AC and the electric heat pump, which are judged to be the most widespread and most economical systems in use. Aside from individual preferences for either gas or electric appliances, it is assumed that a homeowner would purchase the most economic system available, given a satisfactory level of performance. Because the AHP is fired with gas, it obviously is only available where gas lines are present. Since electricity is available everywhere, the AHP must be competitive with both the gas furnace/AC and the electric heat pump in order to attain significant market penetration. This is not the case with an electric heat pump, as it has gained significant market share in areas where gas is not available.

Base Case Scenarios

Results of the base case scenario for each of the seven cities are shown graphically in Figures 5 - 18. Although the exact cost of manufacturing an absorption heat pump is not known, a best-guess estimate would be about $1800 in 1982 dollars. A realistic cost range would be $1500 - $2100, with $1200 as an absolute minimum. For this analysis, manufacturing cost includes all manufacturing costs and burdens but no allowance for manufacturer's

profit. Based on ALCC it was assumed that the AHP would be competitive in a market if the breakeven manufacturing cost was $1500 or greater and superior if the breakeven cost was $1800 or greater.

Upon examination of the graphs, one can see that using 1985 technology, the AHP is only really competitive in New York. When 1990 technology is introduced, the AHP becomes competitive in five cities: New York, Omaha, Madison, Fresno, and Nashville. New York is an exceptionally good market area because it has very high gas and electric prices. Since the AHP is the most energy efficient system, the energy saved in New York adds up to greater value than in other cities.

There are a couple of reasons why the AHP compares well using 1990 technology. First of all, energy prices are higher in the 1990 time frame, leading to greater savings with the AHP.

Also, since there is more "room" for improvement in the AHP advanced design as compared to the others, the AHP makes a relatively greater jump in efficiency in its advanced design than do the Furn/AC and the EHP.

One can easily see that based on ALCC the AHP is not competitive in Fort Worth. This result was expected and can generally be applied to all locations in the southernmost third of the country. Because of the high cooling and low heating requirements, the AHP does not compare well in southerly locations. Only in a unique local area where gas prices and especially electric prices are very high would the AHP be expected to have any more than a minimal market share.

A good example of a local area with unique gas and electric prices is Medford. Because it is in a relatively high heating, low cooling load geographical area, Medford would be expected to be a good potential market for the AHP. However, because Medford has the highest gas price and the lowest electric price of any city tested, Medford emerges as an excellent market for the electric heat pump. Here is an example of a market where the AHP is superior to the Furn/AC but would not be expected to gain a significant market penetration because of the economic advantage of the EHP.

Sensitivity Analysis

Eight different scenarios were examined as part of the sensitivity analysis. The objective was to determine what, if any, changes could be made in the product or the marketing strategy to increase the market penetration of the AHP.

Domestic Hot Water - In this scenario, a load of 15 million BTU was added to the total house load to account for the hot water heating requirements. It was assumed that the AHP would meet the load at its rated COP, 1.25 or 1.5; that the Furn/AC would meet the load with a gas water heater with a COP equal to the COP of the furnace .81 or .86; and that the EHP would meet the load with a standard resistance electric water heater with a COP of 1.0 (electric). No costs were added to the installed cost as it was assumed any modifications to the AHP would be offset by the cost of the water heaters. Results are shown in Figures 19 - 22. The breakeven manufacturing cost increased by an average of 52% with 1985 technology and 40% with 1990 technology over the base case. Because of unknown technical factors such as the matching of AHP capacity to water heating requirements, it is likely that not all operating costs have been considered in this analysis. Also, marketing of a complex appliance such as this creates a new set of problems beyond those of an AHP alone. From an economic standpoint however, addition of hot water heating capability seems to be an attractive option for the AHP despite the technical and marketing problems involved.

Complete Modulation - Manufacturing an AHP with modulating output capability offers the advantage of reduced cycling losses. In this scenario, cycling losses for the AHP were eliminated completely to simulate a completely modulated system. While obviously an improvement, elimination of cycling losses had only a minor effect on the breakeven manufacturing cost of the AHP. From a product development standpoint then, it would make no sense to make the initial cost of the unit very much higher by providing complete modulation. Figure 23 shows the results for Omaha.

Change in Thermostat Setting - The base case analysis assumed a thermostat setting of 70/75. This scenario used a 65/78 setting. Although this parameter is controlled entirely by the homeowner, its impact on the performance of the AHP should be known. In general, the overall effect was not large. There was, however, a much greater positive impact versus the electric heat pump than versus the Furn/AC.

Reduced Supply Air Temperature - It has been proposed that the AHP could satisfactorily meet the house heating load by reducing the delivered air temperature from 110°F to 95°F. This would have the net effect of increasing the COP of the AHP. Compared to the base case (see Figure 24 for one example) this scenario has only a minor effect on the breakeven manufacturing cost of the AHP. While this change might be a low or no cost option for the product, there may be marketing implications to making such a change as well as some offsetting economic factors, like increased electrical load, not considered here.

Change in Economic Parameters - A number of economic changes were tried focusing mainly on gas and electric prices. Results indicate that, as expected, higher gas prices make the AHP look better versus the Furn/AC, but sometimes at the expense of the comparison with the EHP. The reverse is true with higher electric prices. The AHP compares most favorably when both gas and electric prices increase.

Early Advanced Technology - This scenario examined the possibil-ity of using advanced AHP technology in the 1985 time frame. Compared with the base case scenario, this scenario increases the breakdown manufacturing cost for the AHP by an average of 44%. Figures 25 - 28 show the results from four cities. In at least three cities, Madison, Omaha, and Nashville, the AHP becomes competitive based on ALCC in 1985 with advanced technology where it was not competitive before. This appears to be the best option of all the scenarios investigated.

Reduced Electrical Parasitics - This scenario examined the effect of reducing the electrical load of the AHP by 20%. The effect on breakeven manufacturing cost was relatively small. Any reduction in energy use is obviously good, but this scenario indicates that it is a benefit that cannot support a very large increase in cost.

Increased House Load - Because the base case analysis was performed on a single reference house, this scenario examined the effect of increasing the house load by 20%. This could be accomplished by either using a bigger house or by having less insulation in the same house. The results of this scenario were varied. In high heating, low cooling areas, the effect was very positive (see Figures 29 - 30). However, the effect was much less positive in areas with relatively high cooling loads. Apparently, the 20% greater cooling load was a substantial disadvantage to the AHP.

Conclusions

As explained earlier, this analysis was based on ALCC. It is believed that use of a different criterion for comparison, such as payback, would yield similar conclusions. Absolute comparisons between systems in certain cities may differ, but overall trends should be nearly identical. The results of the base case analysis and the sensitivity analysis lead to the following conclusion:

1) The absorption heat pump will find its primary market in northern and central geographic areas where the heating load is 3 - 4 or more times larger than the cooling load and where the cost of electricity is at least 3 times the cost of gas on an equivalent BTU basis.

2) At present performance ("1985 technology") and cost levels, competition from alternative systems will most likely serve to keep the AHP market share relatively low. Only one of the seven cities tested proved to be a potential market. Its market would be a niche market with relatively low volume sales levels.

3) The best way for the absorption heat pump to achieve successful widespread commercialization is to accelerate the advanced development program and commercialize an advanced system ("1990 technology") in the 1985-87 time frame. Under these conditions, five of the seven cities emerged as potential market areas.

4) Adding hot water heating capability to the AHP could make an attractive complimentary product to the AHP. Technical and marketing issues may make this a difficult task, however, until the AHP is established in the marketplace.

Table 1

System Performance Specifications

	1985 Technology	1990 Technology
Absorption Heat Pump		
COP-heating (gas)	1.25	1.50
Capacity - heating	90,000 BTUH	83,000 BTUH
COP-cooling (gas)	0.50	0.68
Capacity-cooling	36,000 BTUH	36,000 BTUH
Electrical consumption	1,275 W *	1,100 W *
Gas Furnace		
COP-heating (gas)	0.81	0.86
Electrical consumption	475 W *	475 W *
Capacity	105,000 BTUH	105,000 BTUH
Electric Air Conditioner		
EER	6.8 *	8.8 *
Capacity	36,000 BTUH	30,000 BTUH
Electric Heat Pump		
COP-heating	2.75	3.10
Capacity-heating	38,000 BTUH	30,000 BTUH
EER	7.7 *	8.1 *
Capacity-cooling	36,000 BTUH	42,000 BTUH

*House blower included

Figure 1

Absorption Heat Pump

Estimated Cycling Performance

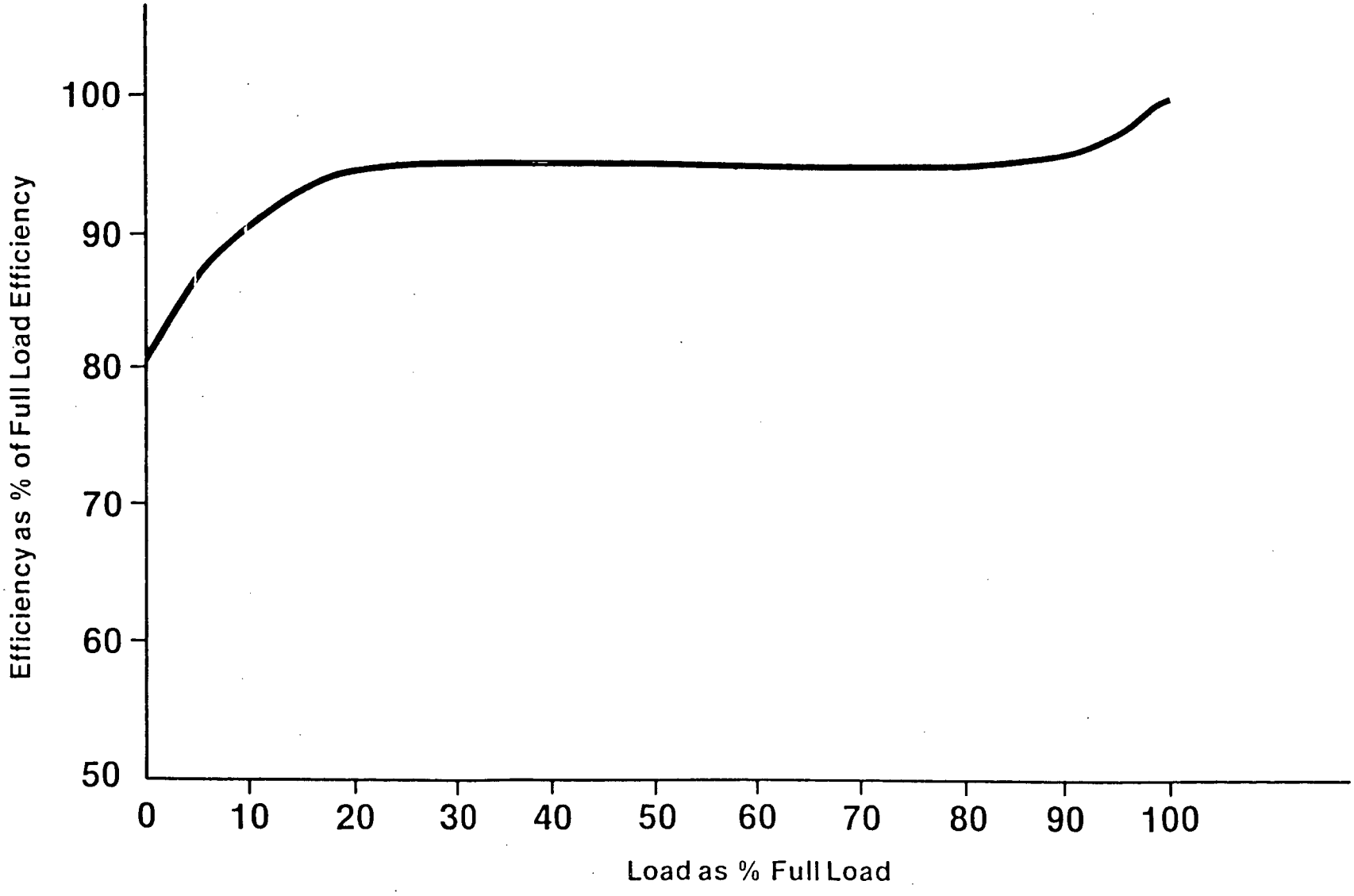

Figure 2

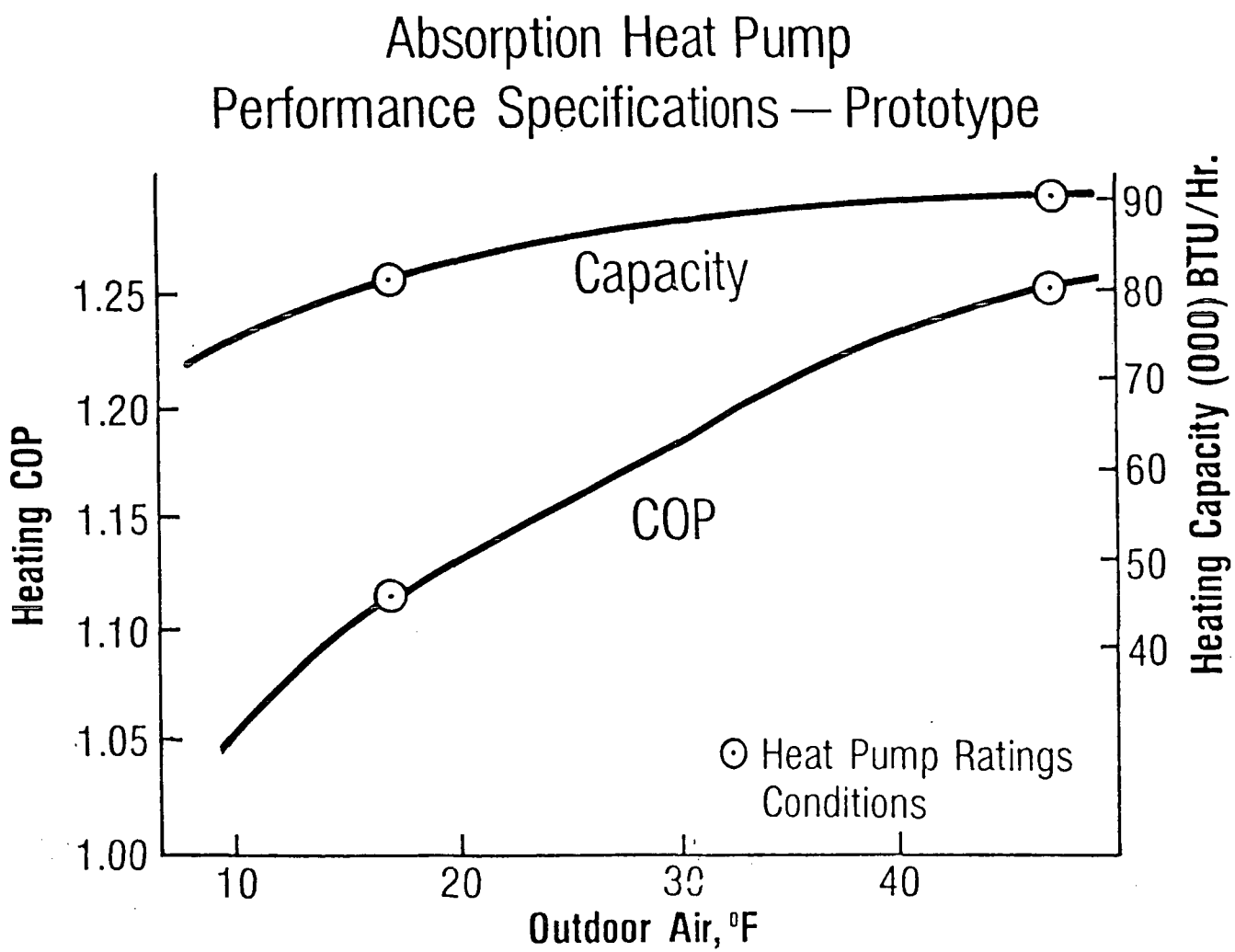
Absorption Heat Pump
Performance Specifications — Prototype
Capacity
COP
Heating COP
1.25
1.20
1.15
1.10
1.05
1.00
Heating Capacity (000) BTU/Hr.
90
80
70
60
50
40
10
20
30
40
Outdoor Air, °F
Heat Pump Ratings Conditions

Figure 3

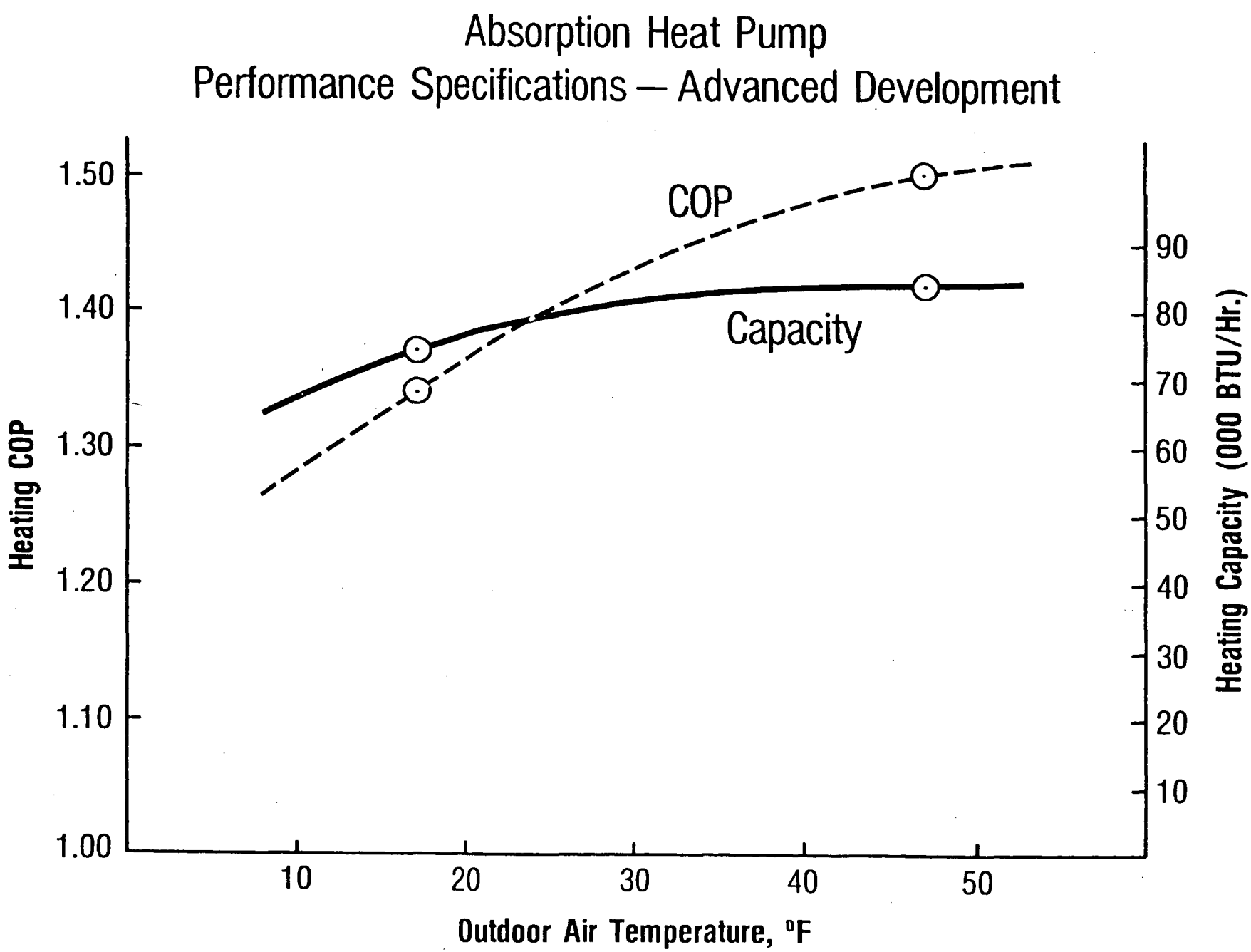
Absorption Heat Pump
Performance Specifications — Advanced Development
COP
Capacity
Heating COP
1.50
1.40
1.30
1.20
1.10
1.00
Heating Capacity (000 BTU/Hr.)
90
80
70
60
50
40
30
20
10
10
20
30
40
50
Outdoor Air Temperature, °F

Figure 4

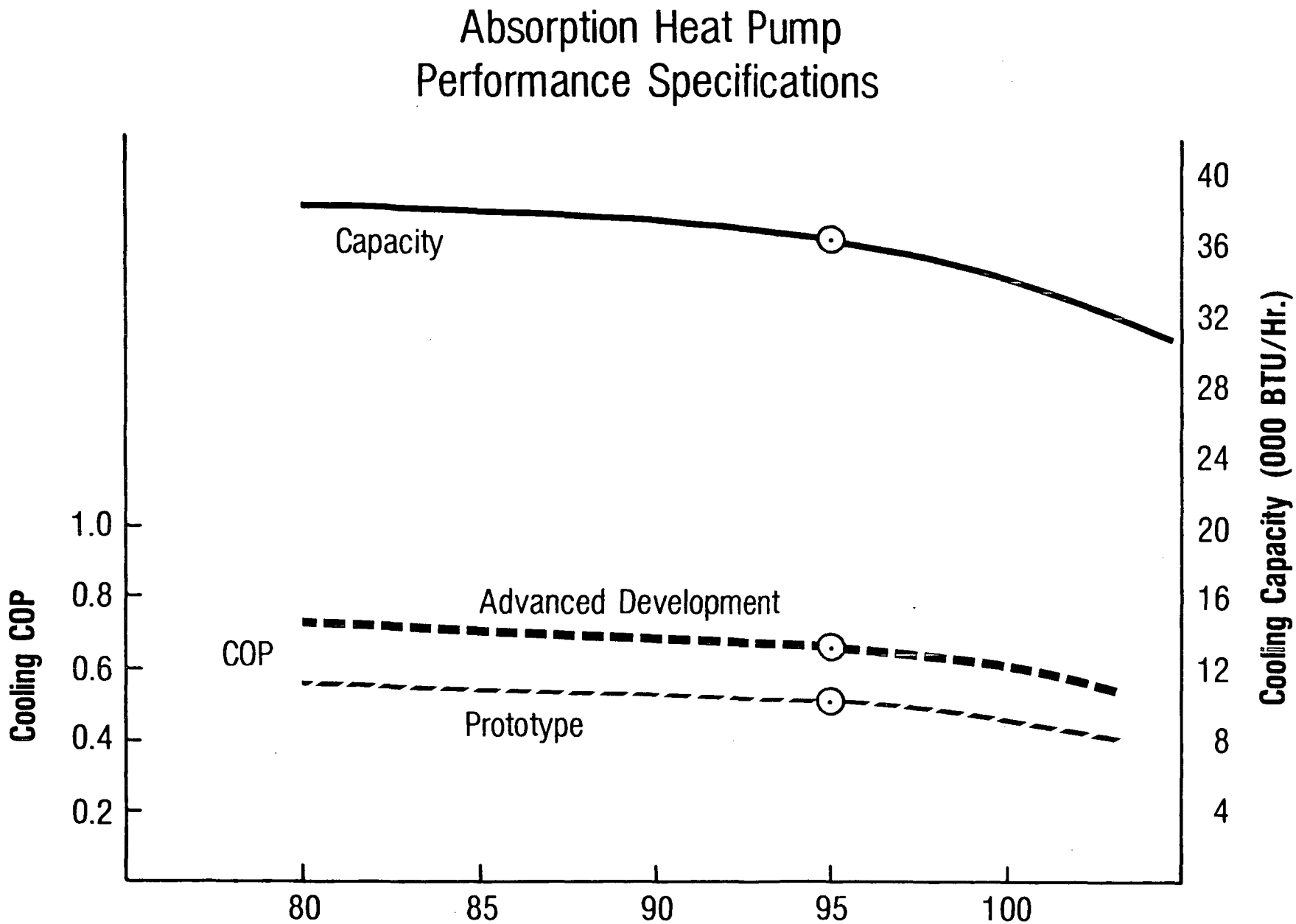
Absorption Heat Pump
Performance Specifications
Capacity
Advanced Development
COP
Prototype
Cooling COP
1.0
0.8
0.6
0.4
0.2
Cooling Capacity (000 BTU/Hr.)
40
36
32
28
24
20
16
12
8
4
80
85
90
95
100

Table 2

ABSORPTION HEAT PUMP - NEW YORK

BIN	LOAD	GAS USED	ELECTRIC USED
-10	.0000	.0000	.000
-5	.0000	.0000	.000
+0	.0000	.0000	.000
+5	.0000	.0000	.000
+10	.6161	.6155	17.952
+15	1.5662	1.5082	44.494
+20	4.7849	4.4864	132.619
+25	5.0786	4.6397	137.407
+30	8.5794	7.7063	227.257
+35	11.2857	9.9695	294.143
+40	11.4008	9.8084	292.780
+45	7.1975	6.2413	182.770
+50	4.5891	3.9905	115.502
+55	2.1765	1.9855	54.478
+60	.6679	.6336	16.627
+65	.1071	.1008	2.660
+70	.0000	.0000	.000
+75	2.0981	3.8279	115.178
+80	3.5645	6.7356	199.534
+85	1.5566	3.0504	89.792
+90	.3038	.6183	18.266
+95	.0000	.0000	.000
+100	.0000	.0000	.000
+105	.0000	.0000	.000
+110	.0000	.0000	.000

TOTAL ANNUAL GAS CONSUMPTION IS 65.9181 *10^6 BTU

TOTAL ANNUAL ELECTRIC CONSUMPTION IS 1941.46 KWH

ADVANCED ABSORPTION HEAT PUMP - NEW YORK

BIN	LOAD	GAS USED	ELECTRIC USED
-10	.0000	.0000	.000
-5	.0000	.0000	.000
+0	.0000	.0000	.000
+5	.0000	.0000	.000
+10	.6161	.5145	17.063
+15	1.5662	1.2779	42.068
+20	4.7849	3.7885	124.267
+25	5.0786	3.9053	128.490
+30	8.5794	6.4581	212.942
+35	11.2857	8.3194	274.892
+40	11.4008	8.2633	273.618
+45	7.1975	5.1117	171.064
+50	4.5891	3.3034	107.764
+55	2.1765	1.6459	50.806
+60	.6679	.5260	15.536
+65	.1071	.0838	2.485
+70	.0000	.0000	.000
+75	2.0981	2.9603	99.369
+80	3.5645	5.1670	172.147
+85	1.5566	2.3201	77.468
+90	.3038	.4659	15.759
+95	.0000	.0000	.000
+100	.0000	.0000	.000
+105	.0000	.0000	.000
+110	.0000	.0000	.000

TOTAL ANNUAL GAS CONSUMPTION IS 54.1111 *10^6 BTU

TOTAL ANNUAL ELECTRIC CONSUMPTION IS 1785.74 KWH

Table 3

GAS FURNACE/ELECTRIC AC - NEW YORK

BIN	LOAD	GAS USED	ELECTRIC USED
-10	.0000	.0000	.000
-5	.0000	.0000	.000
+0	.0000	.0000	.000
+5	.0000	.0000	.000
+10	.6161	.7606	8.961
+15	1.5662	1.9336	22.779
+20	4.7849	5.9073	69.592
+25	5.0786	6.2698	73.863
+30	8.5794	10.5919	124.780
+35	11.2857	13.9329	164.141
+40	11.4008	14.0751	165.815
+45	7.1975	8.8858	104.681
+50	4.5891	5.6656	66.745
+55	2.1765	2.6871	31.656
+60	.6679	.8246	9.714
+65	.1071	.1322	1.558
+70	.0000	.0000	.000
+75	2.0981	.0000	291.072
+80	3.5645	.0000	512.003
+85	1.5566	.0000	229.587
+90	.3038	.0000	46.052
+95	.0000	.0000	.000
+100	.0000	.0000	.000
+105	.0000	.0000	.000
+110	.0000	.0000	.000

TOTAL ANNUAL GAS CONSUMPTION IS 71.6665 *10^6 BTU

TOTAL ANNUAL ELECTRIC CONSUMPTION IS 1923. KWH

ADVANCED GAS FURNACE/ADVANCED ELECTRIC AC-NEW YORK

BIN	LOAD	GAS USED	ELECTRIC USED
-10	.0000	.0000	.000
-5	.0000	.0000	.000
+0	.0000	.0000	.000
+5	.0000	.0000	.000
+10	.6161	.7164	8.953
+15	1.5662	1.8211	22.758
+20	4.7849	5.5638	69.530
+25	5.0786	5.9053	73.797
+30	8.5794	9.9761	124.668
+35	11.2857	13.1229	163.993
+40	11.4008	13.2568	165.666
+45	7.1975	8.3692	104.587
+50	4.5891	5.3362	66.685
+55	2.1765	2.5308	31.627
+60	.6679	.7767	9.706
+65	.1071	.1245	1.556
+70	.0000	.0000	.000
+75	2.0981	.0000	219.881
+80	3.5645	.0000	384.930
+85	1.5566	.0000	172.051
+90	.3038	.0000	34.896
+95	.0000	.0000	.000
+100	.0000	.0000	.000
+105	.0000	.0000	.000
+110	.0000	.0000	.000

TOTAL ANNUAL GAS CONSUMPTION IS 67.4998 *10^6 BTU

TOTAL ANNUAL ELECTRIC CONSUMPTION IS 1655.28 KWH

Table 4

ELECTRIC HEAT PUMP - NEW YORK

BIN	LOAD	ELECTRIC USED
-10	.0000	.00
-5	.0000	.00
+0	.0000	.00
+5	.0000	.00
+10	.6161	151.55
+15	1.5662	354.84
+20	4.7849	957.33
+25	5.0786	887.64
+30	8.5794	1154.42
+35	11.2857	1410.85
+40	11.4008	1397.61
+45	7.1975	883.01
+50	4.5891	561.56
+55	2.1765	264.95
+60	.6679	80.70
+65	.1071	12.35
+70	.0000	.00
+75	2.0981	260.60
+80	3.5645	452.48
+85	1.5566	202.59
+90	.3038	40.53
+95	.0000	.00
+100	.0000	.00
+105	.0000	.00
+110	.0000	.00

TOTAL ANNUAL ELECTRIC CONSUMPTION IS 9073.01 KWH

ADVANCED ELECTRIC HEAT PUMP - NEW YORK

BIN	LOAD	ELECTRIC USED
-10	.0000	.00
-5	.0000	.00
+0	.0000	.00
+5	.0000	.00
+10	.6161	152.95
+15	1.5662	356.99
+20	4.7849	960.51
+25	5.0786	854.50
+30	8.5794	1139.15
+35	11.2857	1437.93
+40	11.4008	1423.68
+45	7.1975	752.34
+50	4.5891	474.38
+55	2.1765	227.72
+60	.6679	70.77
+65	.1071	10.90
+70	.0000	.00
+75	2.0981	224.33
+80	3.5645	392.49
+85	1.5566	175.23
+90	.3038	35.45
+95	.0000	.00
+100	.0000	.00
+105	.0000	.00
+110	.0000	.00

TOTAL ANNUAL ELECTRIC CONSUMPTION IS 8689.31 KWH

Table 5

ABSORPTION HEAT PUMP - OMAHA

BIN	LOAD	GAS USED	ELECTRIC USED
-10	1.0661	1.2335	29.288
-5	2.0392	2.2944	52.774
+0	4.1714	4.4587	103.456
+5	3.4416	3.5372	81.942
+10	3.2913	3.2879	75.350
+15	5.2518	5.0573	117.227
+20	7.3696	6.9100	160.489
+25	7.7990	7.1250	165.794
+30	10.0886	9.0618	209.968
+35	10.0170	8.8488	205.132
+40	5.7168	4.9977	115.352
+45	5.2017	4.5597	103.785
+50	3.5703	3.1046	70.605
+55	1.9819	1.8080	38.978
+60	.5009	.4751	9.796
+65	.0615	.0579	1.201
+70	.0000	.0000	.000
+75	2.7167	4.9566	117.182
+80	5.9366	11.2180	261.109
+85	4.8633	9.5303	220.418
+90	2.3310	4.7437	110.120
+95	.9391	1.9876	46.583
+100	.0000	.0000	.000
+105	.0000	.0000	.000
+110	.0000	.0000	.000

TOTAL ANNUAL GAS CONSUMPTION IS 99.2537 *10^6 BTU

TOTAL ANNUAL ELECTRIC CONSUMPTION IS 2296.55 KWH

ADVANCED ABSORPTION HEAT PUMP - OMAHA

BIN	LOAD	GAS USED	ELECTRIC USED
-10	1.0661	1.0354	28.228
-5	2.0392	1.9359	50.248
+0	4.1714	3.8109	98.045
+5	3.4416	3.0153	77.323
+10	3.2913	2.7485	71.022
+15	5.2518	4.2852	109.911
+20	7.3696	5.8351	149.128
+25	7.7990	5.9973	153.743
+30	10.0886	7.5940	195.102
+35	10.0170	7.3842	190.109
+40	5.7168	4.1435	106.904
+45	5.2017	3.7538	96.327
+50	3.5703	2.5701	65.326
+55	1.9819	1.4987	36.047
+60	.5009	.3944	9.077
+65	.0615	.0481	1.113
+70	.0000	.0000	.000
+75	2.7167	3.8331	100.255
+80	5.9366	8.6056	223.393
+85	4.8633	7.2484	188.580
+90	2.3310	3.5749	94.214
+95	.9391	1.4833	39.855
+100	.0000	.0000	.000
+105	.0000	.0000	.000
+110	.0000	.0000	.000

TOTAL ANNUAL GAS CONSUMPTION IS 80.7957 *10^6 BTU

TOTAL ANNUAL ELECTRIC CONSUMPTION IS 2083.95 KWH

Table 6

GAS FURNACE/ELECTRIC AC - OMAHA

BIN	LOAD	GAS USED	ELECTRIC USED
-10	1.0661	1.3162	11.213
-5	2.0392	2.5175	21.448
+0	4.1714	5.1498	43.874
+5	3.4416	4.2488	36.198
+10	3.2913	4.0633	34.617
+15	5.2518	6.4837	55.237
+20	7.3696	9.0983	77.512
+25	7.7990	9.6283	82.028
+30	10.0886	12.4550	106.109
+35	10.0170	12.3667	105.357
+40	5.7168	7.0578	60.129
+45	5.2017	6.4218	54.710
+50	3.5703	4.4078	37.552
+55	1.9819	2.4468	20.846
+60	.5009	.6183	5.268
+65	.0615	.0760	.647
+70	.0000	.0000	.000
+75	2.7167	.0000	381.787
+80	5.9366	.0000	859.334
+85	4.8633	.0000	720.775
+90	2.3310	.0000	350.356
+95	.9391	.0000	146.563
+100	.0000	.0000	.000
+105	.0000	.0000	.000
+110	.0000	.0000	.000

TOTAL ANNUAL GAS CONSUMPTION IS 88.3563 *10^6 BTU

TOTAL ANNUAL ELECTRIC CONSUMPTION IS 3211.56 KWH

ADVANCED GAS FURNACE/ADVANCED ELECTRIC AC - OMAHA

BIN	LOAD	GAS USED	ELECTRIC USED
-10	1.0661	1.2396	11.193
-5	2.0392	2.3711	21.410
+0	4.1714	4.8504	43.797
+5	3.4416	4.0018	36.135
+10	3.2913	3.8271	34.557
+15	5.2518	6.1067	55.141
+20	7.3696	8.5694	77.378
+25	7.7990	9.0685	81.885
+30	10.0886	11.7309	105.925
+35	10.0170	11.6477	105.173
+40	5.7168	6.6475	60.024
+45	5.2017	6.0485	54.615
+50	3.5703	4.1516	37.487
+55	1.9819	2.3046	20.809
+60	.5009	.5824	5.259
+65	.0615	.0715	.646
+70	.0000	.0000	.000
+75	2.7167	.0000	288.288
+80	5.9366	.0000	646.057
+85	4.8633	.0000	540.266
+90	2.3310	.0000	265.572
+95	.9391	.0000	113.759
+100	.0000	.0000	.000
+105	.0000	.0000	.000
+110	.0000	.0000	.000

TOTAL ANNUAL GAS CONSUMPTION IS 83.2193 *10^6 BTU

TOTAL ANNUAL ELECTRIC CONSUMPTION IS 2605.38 KWH

Table 7

ELECTRIC HEAT PUMP - OMAHA

BIN	LOAD	ELECTRIC USED
-10	1.0661	303.33
-5	2.0392	567.74
+0	4.1714	1119.71
+5	3.4416	882.45
+10	3.2913	809.44
+15	5.2518	1205.33
+20	7.3696	1511.16
+25	7.7990	1424.50
+30	10.0886	1438.06
+35	10.0170	1241.43
+40	5.7168	696.25
+45	5.2017	635.09
+50	3.5703	435.47
+55	1.9819	240.83
+60	.5009	60.48
+65	.0615	7.09
+70	.0000	.00
+75	2.7167	333.48
+80	5.9366	736.68
+85	4.8633	612.71
+90	2.3310	294.54
+95	.9391	123.79
+100	.0000	.00
+105	.0000	.00
+110	.0000	.00

TOTAL ANNUAL ELECTRIC CONSUMPTION IS 14679.6 KWH

ADVANCED ELECTRIC HEAT PUMP - OMAHA

BIN	LOAD	ELECTRIC USED
-10	1.0661	302.75
-5	2.0392	564.52
+0	4.1714	1096.36
+5	3.4416	861.82
+10	3.2913	770.42
+15	5.2518	1109.28
+20	7.3696	1312.89
+25	7.7990	1090.66
+30	10.0886	1303.90
+35	10.0170	1322.39
+40	5.7168	733.16
+45	5.2017	559.92
+50	3.5703	376.40
+55	1.9819	209.78
+60	.5009	53.24
+65	.0615	6.28
+70	.0000	.00
+75	2.7167	295.89
+80	5.9366	660.56
+85	4.8633	550.66
+90	2.3310	272.00
+95	.9391	123.94
+100	.0000	.00
+105	.0000	.00
+110	.0000	.00

TOTAL ANNUAL ELECTRIC CONSUMPTION IS 13576.8 KWH

Table 8

ABSORPTION HEAT PUMP - MADISON

BIN	LOAD	GAS USED	ELECTRIC USED
-10	2.5398	2.9387	70.867
-5	1.3236	1.4892	34.790
+0	2.4862	2.6574	62.625
+5	4.1138	4.2281	99.480
+10	5.9203	5.9141	137.658
+15	6.8593	6.6052	155.505
+20	11.7153	10.9846	259.117
+25	13.5934	12.4186	293.496
+30	14.3982	12.9329	304.352
+35	10.1950	9.0061	212.044
+40	5.6430	4.9332	115.644
+45	4.1048	3.5595	83.182
+50	3.7650	3.2739	75.619
+55	2.0211	1.8437	40.370
+60	.7163	.6796	14.230
+65	.1243	.1170	2.464
+70	.0004	.0003	.007
+75	1.7483	3.1897	76.588
+80	4.0608	7.6734	181.399
+85	2.5807	5.0573	118.797
+90	.8316	1.6923	39.899
+95	.0262	.0524	1.319
+100	.0000	.0000	.000
+105	.0000	.0000	.000
+110	.0000	.0000	.000

TOTAL ANNUAL GAS CONSUMPTION IS 101.247 *10^6 BTU

TOTAL ANNUAL ELECTRIC CONSUMPTION IS 2379.45 KWH

ADVANCED ABSORPTION HEAT PUMP - MADISON

BIN	LOAD	GAS USED	ELECTRIC USED
-10	2.5398	2.5830	61.135
-5	1.3236	1.2632	29.650
+0	2.4862	2.2713	53.123
+5	4.1138	3.6042	84.023
+10	5.9203	4.9438	116.138
+15	6.8593	5.5968	130.504
+20	11.7153	9.2759	215.514
+25	13.5934	10.4531	243.609
+30	14.3982	10.8381	253.133
+35	10.1950	7.5154	175.897
+40	5.6430	4.1560	95.931
+45	4.1048	2.9945	69.105
+50	3.7650	2.7102	62.625
+55	2.0211	1.5284	33.418
+60	.7163	.5641	11.802
+65	.1243	.0973	2.043
+70	.0004	.0003	.006
+75	1.7483	2.4667	58.650
+80	4.0608	5.8864	138.915
+85	2.5807	3.8464	90.974
+90	.8316	1.2753	30.555
+95	.0262	.0403	1.010
+100	.0000	.0000	.000
+105	.0000	.0000	.000
+110	.0000	.0000	.000

TOTAL ANNUAL GAS CONSUMPTION IS 83.9106 *10^6 BTU

TOTAL ANNUAL ELECTRIC CONSUMPTION IS 1957.76 KWH

Table 9

GAS FURNACE/ELECTRIC AC - MADISON

BIN	LOAD	GAS USED	ELECTRIC USED
-10	2.5398	3.1356	25.421
-5	1.3236	1.6340	13.247
+0	2.4862	3.0693	24.884
+5	4.1138	5.0787	41.174
+10	5.9203	7.3090	59.255
+15	6.8593	8.4682	68.654
+20	11.7153	14.4634	117.257
+25	13.5934	16.7819	136.054
+30	14.3982	17.7756	144.110
+35	10.1950	12.5864	102.041
+40	5.6430	6.9667	56.480
+45	4.1048	5.0677	41.085
+50	3.7650	4.6482	37.683
+55	2.0211	2.4952	20.229
+60	.7163	.8844	7.170
+65	.1243	.1535	1.244
+70	.0004	.0004	.004
+75	1.7483	.0000	242.566
+80	4.0608	.0000	576.506
+85	2.5807	.0000	370.739
+90	.8316	.0000	118.707
+95	.0262	.0000	3.850
+100	.0000	.0000	.000
+105	.0000	.0000	.000
+110	.0000	.0000	.000

TOTAL ANNUAL GAS CONSUMPTION IS 110.518 *10^6 BTU

TOTAL ANNUAL ELECTRIC CONSUMPTION IS 2208.36 KWH

ADVANCED GAS FURNACE/ADVANCED ELECTRIC AC - MADISON

BIN	LOAD	GAS USED	ELECTRIC USED
-10	2.5398	2.9533	25.399
-5	1.3236	1.5390	13.236
+0	2.4862	2.8909	24.863
+5	4.1138	4.7835	41.140
+10	5.9203	6.8840	59.205
+15	6.8593	7.9759	68.596
+20	11.7153	13.6225	117.159
+25	13.5934	15.8062	135.940
+30	14.3982	16.7421	143.989
+35	10.1950	11.8547	101.955
+40	5.6430	6.5617	56.433
+45	4.1048	4.7731	41.050
+50	3.7650	4.3779	37.652
+55	2.0211	2.3501	20.212
+60	.7163	.8329	7.164
+65	.1243	.1445	1.243
+70	.0004	.0004	.004
+75	1.7483	.0000	183.238
+80	4.0608	.0000	433.531
+85	2.5807	.0000	277.788
+90	.8316	.0000	90.007
+95	.0262	.0000	2.988
+100	.0000	.0000	.000
+105	.0000	.0000	.000
+110	.0000	.0000	.000

TOTAL ANNUAL GAS CONSUMPTION IS 104.093 *10^6 BTU

TOTAL ANNUAL ELECTRIC CONSUMPTION IS 1882.79 KWH

Table 10

ELECTRIC HEAT PUMP - MADISON

BIN	LOAD	ELECTRIC USED
-10	2.5398	720.10
-5	1.3236	365.72
+0	2.4862	658.26
+5	4.1138	1035.14
+10	5.9203	1426.22
+15	6.8593	1472.12
+20	11.7153	2256.12
+25	13.5934	2288.39
+30	14.3982	1802.18
+35	10.1950	1291.03
+40	5.6430	698.50
+45	4.1048	507.19
+50	3.7650	462.93
+55	2.0211	246.70
+60	.7163	86.62
+65	.1243	14.34
+70	.0004	.04
+75	1.7483	217.74
+80	4.0608	511.40
+85	2.5807	328.72
+90	.8316	105.26
+95	.0262	3.39
+100	.0000	.00
+105	.0000	.00
+110	.0000	.00

TOTAL ANNUAL ELECTRIC CONSUMPTION IS 16498.1 KWH

ADVANCED ELECTRIC HEAT PUMP - MADISON

BIN	LOAD	ELECTRIC USED
-10	2.5398	724.93
-5	1.3236	369.41
+0	2.4862	663.71
+5	4.1138	1056.53
+10	5.9203	1444.58
+15	6.8593	1489.48
+20	11.7153	2278.37
+25	13.5934	2216.03
+30	14.3982	1803.97
+35	10.1950	1313.34
+40	5.6430	710.54
+45	4.1048	433.00
+50	3.7650	391.58
+55	2.0211	212.23
+60	.7163	75.98
+65	.1243	12.66
+70	.0004	.04
+75	1.7483	187.44
+80	4.0608	440.67
+85	2.5807	286.75
+90	.8316	97.03
+95	.0262	3.24
+100	.0000	.00
+105	.0000	.00
+110	.0000	.00

TOTAL ANNUAL ELECTRIC CONSUMPTION IS 16211.5 KWH

Table 11

ABSORPTION HEAT PUMP - FRESNO

BIN	LOAD	GAS USED	ELECTRIC USED
-10	.0000	.0000	.000
-5	.0000	.0000	.000
+0	.0000	.0000	.000
+5	.0000	.0000	.000
+10	.0000	.0000	.000
+15	.0000	.0000	.000
+20	.0000	.0000	.000
+25	.1440	.1316	2.750
+30	2.1843	1.9620	40.828
+35	5.4012	4.7713	99.339
+40	7.1677	6.2660	129.891
+45	8.7303	7.6528	156.440
+50	6.6581	6.1224	118.252
+55	2.9656	2.7053	52.380
+60	.7032	.6671	12.352
+65	.0394	.0371	.691
+70	.0000	.0000	.000
+75	.6711	1.3299	25.996
+80	1.8351	3.5620	72.491
+85	1.8077	3.6388	73.584
+90	2.0999	4.3422	89.094
+95	1.6343	3.4588	72.806
+100	.9678	2.2263	46.056
+105	.1269	.3197	6.544
+110	.0000	.0000	.000

TOTAL ANNUAL GAS CONSUMPTION IS 49.1933 *10^6 BTU

TOTAL ANNUAL ELECTRIC CONSUMPTION IS 999.494 KWH

ADVANCED ABSORPTION HEAT PUMP - FRESNO

BIN	LOAD	GAS USED	ELECTRIC USED
-10	.0000	.0000	.000
-5	.0000	.0000	.000
+0	.0000	.0000	.000
+5	.0000	.0000	.000
+10	.0000	.0000	.000
+15	.0000	.0000	.000
+20	.0000	.0000	.000
+25	.1440	.1108	2.571
+30	2.1843	1.6442	38.256
+35	5.4012	3.9816	92.837
+40	7.1677	5.2789	121.390
+45	8.7303	6.3688	146.420
+50	6.6581	4.7928	110.329
+55	2.9656	2.2426	48.849
+60	.7032	.5537	11.542
+65	.0394	.0308	.645
+70	.0000	.0000	.000
+75	.6711	1.0284	22.428
+80	1.8351	2.7325	62.541
+85	1.8077	2.7675	63.484
+90	2.0999	3.2724	76.866
+95	1.6343	2.5812	62.813
+100	.9678	1.6518	39.735
+105	.1269	.2315	5.646
+110	.0000	.0000	.000

TOTAL ANNUAL GAS CONSUMPTION IS 39.2694 *10^6 BTU

TOTAL ANNUAL ELECTRIC CONSUMPTION IS 906.352 KWH

Table 12

GAS FURNACE/ELECTRIC AC - FRESNO

BIN	LOAD	GAS USED	ELECTRIC USED
-10	.0000	.0000	.000
-5	.0000	.0000	.000
+0	.0000	.0000	.000
+5	.0000	.0000	.000
+10	.0000	.0000	.000
+15	.0000	.0000	.000
+20	.0000	.0000	.000
+25	.1440	.1778	3.070
+30	2.1843	2.6966	46.561
+35	5.4012	6.6682	115.136
+40	7.1677	8.8490	152.790
+45	8.7303	10.7781	186.100
+50	6.6581	8.2199	141.928
+55	2.9656	3.6612	63.216
+60	.7032	.8681	14.989
+65	.0394	.0486	.840
+70	.0000	.0000	.000
+75	.6711	.0000	100.312
+80	1.8351	.0000	286.236
+85	1.8077	.0000	293.262
+90	2.0999	.0000	354.339
+95	1.6343	.0000	284.443
+100	.9678	.0000	176.873
+105	.1269	.0000	24.560
+110	.0000	.0000	.000

TOTAL ANNUAL GAS CONSUMPTION IS 41.9676 *10^6 BTU

TOTAL ANNUAL ELECTRIC CONSUMPTION IS 2244.66 KWH

ADVANCED GAS FURNACE/ADVANCED ELECTRIC AC - FRESNO

BIN	LOAD	GAS USED	ELECTRIC USED
-10	.0000	.0000	.000
-5	.0000	.0000	.000
+0	.0000	.0000	.000
+5	.0000	.0000	.000
+10	.0000	.0000	.000
+15	.0000	.0000	.000
+20	.0000	.0000	.000
+25	.1440	.1675	3.067
+30	2.1843	2.5399	46.517
+35	5.4012	6.2805	115.027
+40	7.1677	8.3345	152.647
+45	8.7303	10.1515	185.925
+50	6.6581	7.7420	141.795
+55	2.9656	3.4484	63.157
+60	.7032	.8176	14.975
+65	.0394	.0458	.839
+70	.0000	.0000	.000
+75	.6711	.0000	75.522
+80	1.8351	.0000	214.775
+85	1.8077	.0000	219.847
+90	2.0999	.0000	268.099
+95	1.6343	.0000	220.699
+100	.9678	.0000	137.343
+105	.1269	.0000	19.379
+110	.0000	.0000	.000

TOTAL ANNUAL GAS CONSUMPTION IS 39.5276 *10^6 BTU

TOTAL ANNUAL ELECTRIC CONSUMPTION IS 1879.61 KWH

Table 13

ELECTRIC HEAT PUMP - FRESNO

BIN	LOAD	ELECTRIC USED
-10	.0000	.00
-5	.0000	.00
+0	.0000	.00
+5	.0000	.00
+10	.0000	.00
+15	.0000	.00
+20	.0000	.00
+25	.1440	20.55
+30	2.1843	283.76
+35	5.4012	703.43
+40	7.1677	906.03
+45	8.7303	1095.43
+50	6.6581	827.15
+55	2.9656	364.07
+60	.7032	85.17
+65	.0394	4.55
+70	.0000	.00
+75	.6711	89.40
+80	1.8351	251.88
+85	1.8077	257.88
+90	2.0999	309.89
+95	1.6343	250.26
+100	.9678	156.10
+105	.1269	21.67
+110	.0000	.00

TOTAL ANNUAL ELECTRIC CONSUMPTION IS 5627.21 KWH

ADVANCED ELECTRIC HEAT PUMP - FRESNO

BIN	LOAD	ELECTRIC USED
-10	.0000	.00
-5	.0000	.00
+0	.0000	.00
+5	.0000	.00
+10	.0000	.00
+15	.0000	.00
+20	.0000	.00
+25	.1440	19.46
+30	2.1843	284.09
+35	5.4012	716.66
+40	7.1677	922.69
+45	8.7303	943.68
+50	6.6581	703.88
+55	2.9656	314.41
+60	.7032	74.79
+65	.0394	4.02
+70	.0000	.00
+75	.6711	80.36
+80	1.8351	229.31
+85	1.8077	236.07
+90	2.0999	283.15
+95	1.6343	239.34
+100	.9678	147.94
+105	.1269	20.06
+110	.0000	.00

TOTAL ANNUAL ELECTRIC CONSUMPTION IS 5219.92 KWH

Table 14

ABSORPTION HEAT PUMP - NASHVILLE

BIN	LOAD	GAS USED	ELECTRIC USED
-10	.0000	.0000	.000
-5	.0000	.0000	.000
+0	.0000	.0000	.000
+5	.0000	.0000	.000
+10	.4349	.4345	9.354
+15	.7426	.7151	15.574
+20	1.1529	1.0810	23.588
+25	4.3492	3.9733	86.861
+30	6.7289	6.0441	131.569
+35	8.5342	7.5390	164.189
+40	6.3596	5.5596	120.555
+45	5.6621	4.9633	106.134
+50	4.1030	3.7729	76.227
+55	2.0474	1.8677	37.828
+60	.8370	.7941	15.380
+65	.0566	.0533	1.038
+70	.0000	.0000	.000
+75	2.2523	4.1092	91.268
+80	5.8198	10.9973	240.478
+85	5.6882	11.1469	242.202
+90	2.5811	5.2525	114.553
+95	.1097	.2321	5.110
+100	.0000	.0000	.000
+105	.0000	.0000	.000
+110	.0000	.0000	.000

TOTAL ANNUAL GAS CONSUMPTION IS 68.5359 *10^6 BTU

TOTAL ANNUAL ELECTRIC CONSUMPTION IS 1481.91 KWH

ADVANCED ABSORPTION HEAT PUMP - NASHVILLE

BIN	LOAD	GAS USED	ELECTRIC USED
-10	.0000	.0000	.000
-5	.0000	.0000	.000
+0	.0000	.0000	.000
+5	.0000	.0000	.000
+10	.4349	.3632	8.891
+15	.7426	.6060	14.724
+20	1.1529	.9129	22.102
+25	4.3492	3.3445	81.224
+30	6.7289	5.0651	123.281
+35	8.5342	6.2911	153.443
+40	6.3596	4.6838	112.665
+45	5.6621	4.0861	99.336
+50	4.1030	2.9535	71.120
+55	2.0474	1.5482	35.278
+60	.8370	.6591	14.371
+65	.0566	.0443	.970
+70	.0000	.0000	.000
+75	2.2523	3.1778	78.741
+80	5.8198	8.4363	207.471
+85	5.6882	8.4779	208.959
+90	2.5811	3.9584	98.830
+95	.1097	.1732	4.409
+100	.0000	.0000	.000
+105	.0000	.0000	.000
+110	.0000	.0000	.000

TOTAL ANNUAL GAS CONSUMPTION IS 54.7814 *10^6 BTU

TOTAL ANNUAL ELECTRIC CONSUMPTION IS 1335.82 KWH

Table 15

GAS FURNACE/ELECTRIC AC - NASHVILLE

BIN	LOAD	GAS USED	ELECTRIC USED
-10	.0000	.0000	.000
-5	.0000	.0000	.000
+0	.0000	.0000	.000
+5	.0000	.0000	.000
+10	.4349	.5369	6.181
+15	.7426	.9168	10.554
+20	1.1529	1.4234	16.385
+25	4.3492	5.3694	61.807
+30	6.7289	8.3073	95.625
+35	8.5342	10.5361	121.281
+40	6.3596	7.8514	90.377
+45	5.6621	6.9903	80.465
+50	4.1030	5.0654	58.308
+55	2.0474	2.5277	29.096
+60	.8370	1.0333	11.895
+65	.0566	.0699	.805
+70	.0000	.0000	.000
+75	2.2523	.0000	324.052
+80	5.8198	.0000	869.621
+85	5.6882	.0000	875.870
+90	2.5811	.0000	409.348
+95	.1097	.0000	17.919
+100	.0000	.0000	.000
+105	.0000	.0000	.000
+110	.0000	.0000	.000

TOTAL ANNUAL GAS CONSUMPTION IS 50.628 *10^6 BTU

TOTAL ANNUAL ELECTRIC CONSUMPTION IS 3079.59 KWH

ADVANCED GAS FURNACE/ADVANCED ELECTRIC AC - NASHVILLE

BIN	LOAD	GAS USED	ELECTRIC USED
-10	.0000	.0000	.000
-5	.0000	.0000	.000
+0	.0000	.0000	.000
+5	.0000	.0000	.000
+10	.4349	.5057	6.183
+15	.7426	.8635	10.558
+20	1.1529	1.3406	16.391
+25	4.3492	5.0572	61.832
+30	6.7289	7.8243	95.664
+35	8.5342	9.9235	121.330
+40	6.3596	7.3949	90.414
+45	5.6621	6.5839	80.498
+50	4.1030	4.7709	58.332
+55	2.0474	2.3807	29.108
+60	.8370	.9733	11.900
+65	.0566	.0658	.805
+70	.0000	.0000	.000
+75	2.2523	.0000	244.482
+80	5.8198	.0000	653.468
+85	5.6882	.0000	656.827
+90	2.5811	.0000	310.192
+95	.1097	.0000	13.914
+100	.0000	.0000	.000
+105	.0000	.0000	.000
+110	.0000	.0000	.000

TOTAL ANNUAL GAS CONSUMPTION IS 47.6845 *10^6 BTU

TOTAL ANNUAL ELECTRIC CONSUMPTION IS 2461.9 KWH

Table 16

ELECTRIC HEAT PUMP - NASHVILLE

BIN	LOAD	ELECTRIC USED
-10	.0000	.00
-5	.0000	.00
+0	.0000	.00
+5	.0000	.00
+10	.4349	100.40
+15	.7426	151.89
+20	1.1529	197.48
+25	4.3492	613.89
+30	6.7289	874.52
+35	8.5342	1111.83
+40	6.3596	804.10
+45	5.6621	710.58
+50	4.1030	509.78
+55	2.0474	251.36
+60	.8370	101.38
+65	.0566	6.54
+70	.0000	.00
+75	2.2523	289.25
+80	5.8198	766.23
+85	5.6882	770.75
+90	2.5811	358.78
+95	.1097	15.80
+100	.0000	.00
+105	.0000	.00
+110	.0000	.00

TOTAL ANNUAL ELECTRIC CONSUMPTION IS 7634.57 KWH

ADVANCED ELECTRIC HEAT PUMP - NASHVILLE

BIN	LOAD	ELECTRIC USED
-10	.0000	.00
-5	.0000	.00
+0	.0000	.00
+5	.0000	.00
+10	.4349	101.96
+15	.7426	153.88
+20	1.1529	199.86
+25	4.3492	584.33
+30	6.7289	874.71
+35	8.5342	1131.87
+40	6.3596	818.42
+45	5.6621	611.82
+50	4.1030	433.66
+55	2.0474	217.03
+60	.8370	89.02
+65	.0566	5.78
+70	.0000	.00
+75	2.2523	253.82
+80	5.8198	678.65
+85	5.6882	681.90
+90	2.5811	315.04
+95	.1097	15.10
+100	.0000	.00
+105	.0000	.00
+110	.0000	.00

TOTAL ANNUAL ELECTRIC CONSUMPTION IS 7166.85 KWH

Table 17

ABSORPTION HEAT PUMP - FORT WORTH

BIN	LOAD	GAS USED	ELECTRIC USED
-10	.0000	.0000	.000
-5	.0000	.0000	.000
+0	.0000	.0000	.000
+5	.0000	.0000	.000
+10	.0000	.0000	.000
+15	.0792	.0763	1.464
+20	.8298	.7781	14.968
+25	1.6921	1.5459	29.795
+30	2.9733	2.6707	51.257
+35	5.1898	4.5845	88.031
+40	4.7843	4.1825	79.961
+45	5.5412	4.8572	91.576
+50	3.1084	2.8583	50.917
+55	1.9975	1.8222	32.539
+60	.7460	.7077	12.086
+65	.0808	.0761	1.306
+70	.0000	.0000	.000
+75	2.0819	3.9016	74.381
+80	5.2525	10.0854	191.356
+85	4.5649	8.9455	171.371
+90	3.4571	7.0352	135.277
+95	2.8268	5.9826	116.144
+100	.8958	2.0607	39.317
+105	.0108	.0273	.516
+110	.0000	.0000	.000

TOTAL ANNUAL GAS CONSUMPTION IS 62.198 *10^6 BTU

TOTAL ANNUAL ELECTRIC CONSUMPTION IS 1182.26 KWH

ADVANCED ABSORPTION HEAT PUMP - FORT WORTH

BIN	LOAD	GAS USED	ELECTRIC USED
-10	.0000	.0000	.000
-5	.0000	.0000	.000
+0	.0000	.0000	.000
+5	.0000	.0000	.000
+10	.0000	.0000	.000
+15	.0792	.0646	1.384
+20	.8298	.6570	14.026
+25	1.6921	1.3012	27.861
+30	2.9733	2.2381	48.028
+35	5.1898	3.8257	82.269
+40	4.7843	3.5236	74.728
+45	5.5412	4.0423	85.710
+50	3.1084	2.3662	47.505
+55	1.9975	1.5105	30.346
+60	.7460	.5875	11.293
+65	.0808	.0632	1.221
+70	.0000	.0000	.000
+75	2.0819	3.0172	64.172
+80	5.2525	7.7368	165.092
+85	4.5649	6.8036	147.850
+90	3.4571	5.3019	116.709
+95	2.8268	4.4647	100.202
+100	.8958	1.5289	33.920
+105	.0108	.0198	.445
+110	.0000	.0000	.000

TOTAL ANNUAL GAS CONSUMPTION IS 49.0528 *10^6 BTU

TOTAL ANNUAL ELECTRIC CONSUMPTION IS 1052.76 KWH

Table 18

GAS FURNACE/ELECTRIC AC - FORT WORTH

BIN	LOAD	GAS USED	ELECTRIC USED
-10	.0000	.0000	.000
-5	.0000	.0000	.000
+0	.0000	.0000	.000
+5	.0000	.0000	.000
+10	.0000	.0000	.000
+15	.0792	.0978	1.344
+20	.8298	1.0245	14.087
+25	1.6921	2.0890	28.724
+30	2.9733	3.6707	50.473
+35	5.1898	6.4071	88.099
+40	4.7843	5.9066	81.216
+45	5.5412	6.8409	94.064
+50	3.1084	3.8376	52.768
+55	1.9975	2.4661	33.909
+60	.7460	.9210	12.664
+65	.0808	.0998	1.372
+70	.0000	.0000	.000
+75	2.0819	.0000	306.070
+80	5.2525	.0000	805.685
+85	4.5649	.0000	725.820
+90	3.4571	.0000	571.570
+95	2.8268	.0000	482.666
+100	.8958	.0000	160.651
+105	.0108	.0000	2.062
+110	.0000	.0000	.000

TOTAL ANNUAL GAS CONSUMPTION IS 33.361 *10^6 BTU

TOTAL ANNUAL ELECTRIC CONSUMPTION IS 3513.24 KWH

ADVANCED GAS FURNACE/ADVANCED ELECTRIC AC - FORT WORTH

BIN	LOAD	GAS USED	ELECTRIC USED
-10	.0000	.0000	.000
-5	.0000	.0000	.000
+0	.0000	.0000	.000
+5	.0000	.0000	.000
+10	.0000	.0000	.000
+15	.0792	.0921	1.353
+20	.8298	.9649	14.172
+25	1.6921	1.9675	28.899
+30	2.9733	3.4573	50.780
+35	5.1898	6.0346	88.634
+40	4.7843	5.5632	81.710
+45	5.5412	6.4432	94.636
+50	3.1084	3.6145	53.088
+55	1.9975	2.3227	34.115
+60	.7460	.8675	12.741
+65	.0808	.0940	1.380
+70	.0000	.0000	.000
+75	2.0819	.0000	230.549
+80	5.2525	.0000	604.598
+85	4.5649	.0000	543.860
+90	3.4571	.0000	432.397
+95	2.8268	.0000	374.328
+100	.8958	.0000	124.695
+105	.0108	.0000	1.626
+110	.0000	.0000	.000

TOTAL ANNUAL GAS CONSUMPTION IS 31.4214 *10^6 BTU

TOTAL ANNUAL ELECTRIC CONSUMPTION IS 2773.56 KWH

Table 19

ELECTRIC HEAT PUMP - FORT WORTH

BIN	LOAD	ELECTRIC USED
-10	.0000	.00
-5	.0000	.00
+0	.0000	.00
+5	.0000	.00
+10	.0000	.00
+15	.0792	15.70
+20	.8298	134.65
+25	1.6921	222.39
+30	2.9733	392.88
+35	5.1898	685.01
+40	4.7843	610.83
+45	5.5412	700.35
+50	3.1084	388.05
+55	1.9975	245.89
+60	.7460	90.43
+65	.0808	9.34
+70	.0000	.00
+75	2.0819	272.94
+80	5.2525	709.33
+85	4.5649	638.44
+90	3.4571	500.31
+95	2.8268	425.06
+100	.8958	141.98
+105	.0108	1.82
+110	.0000	.00

TOTAL ANNUAL ELECTRIC CONSUMPTION IS 6185.41 KWH

ADVANCED ELECTRIC HEAT PUMP - FORT WORTH

BIN	LOAD	ELECTRIC USED
-10	.0000	.00
-5	.0000	.00
+0	.0000	.00
+5	.0000	.00
+10	.0000	.00
+15	.0792	16.06
+20	.8298	138.43
+25	1.6921	223.51
+30	2.9733	391.80
+35	5.1898	695.85
+40	4.7843	620.71
+45	5.5412	604.15
+50	3.1084	330.51
+55	1.9975	212.49
+60	.7460	79.42
+65	.0808	8.26
+70	.0000	.00
+75	2.0819	242.45
+80	5.2525	637.81
+85	4.5649	575.53
+90	3.4571	450.04
+95	2.8268	405.77
+100	.8958	134.31
+105	.0108	1.68
+110	.0000	.00

TOTAL ANNUAL ELECTRIC CONSUMPTION IS 5768.77 KWH

Table 20

ABSORPTION HEAT PUMP - MEDFORD

BIN	LOAD	GAS USED	ELECTRIC USED
-10	.0000	.0000	.000
-5	.0000	.0000	.000
+0	.0000	.0000	.000
+5	.0000	.0000	.000
+10	.0000	.0000	.000
+15	.4774	.4597	12.312
+20	.7577	.7104	19.063
+25	3.6406	3.3259	89.415
+30	8.2544	7.4143	198.481
+35	14.1680	12.5157	335.208
+40	14.8456	12.7721	346.080
+45	10.4720	9.0808	241.395
+50	5.7781	5.0244	132.013
+55	2.5256	2.3040	57.385
+60	.6653	.6311	15.033
+65	.0745	.0702	1.681
+70	.0000	.0000	.000
+75	.6499	1.2049	32.388
+80	1.6595	3.1359	84.330
+85	1.8488	3.6230	96.811
+90	1.5460	3.1460	84.377
+95	.5433	1.1498	31.135
+100	.0579	.1331	3.542
+105	.0000	.0000	.000
+110	.0000	.0000	.000

TOTAL ANNUAL GAS CONSUMPTION IS 66.7015 *10^6 BTU

TOTAL ANNUAL ELECTRIC CONSUMPTION IS 1780.65 KWH

ADVANCED ABSORPTION HEAT PUMP - MEDFORD

BIN	LOAD	GAS USED	ELECTRIC USED
-10	.0000	.0000	.000
-5	.0000	.0000	.000
+0	.0000	.0000	.000
+5	.0000	.0000	.000
+10	.0000	.0000	.000
+15	.4774	.3895	11.640
+20	.7577	.5999	17.863
+25	3.6406	2.7995	83.612
+30	8.2544	6.2134	185.978
+35	14.1680	10.4442	313.269
+40	14.8456	10.7600	323.430
+45	10.4720	7.5572	225.933
+50	5.7781	4.1593	123.169
+55	2.5256	1.9099	53.517
+60	.6653	.5239	14.047
+65	.0745	.0583	1.570
+70	.0000	.0000	.000
+75	.6499	.9318	27.943
+80	1.6595	2.4056	72.755
+85	1.8488	2.7555	83.523
+90	1.5460	2.3709	72.796
+95	.5433	.8581	26.862
+100	.0579	.0988	3.056
+105	.0000	.0000	.000
+110	.0000	.0000	.000

TOTAL ANNUAL GAS CONSUMPTION IS 54.8358 *10^6 BTU

TOTAL ANNUAL ELECTRIC CONSUMPTION IS 1640.96 KWH

Table 21

GAS FURNACE/ELECTRIC AC - MEDFORD

BIN	LOAD	GAS USED	ELECTRIC USED
-10	.0000	.0000	.000
-5	.0000	.0000	.000
+0	.0000	.0000	.000
+5	.0000	.0000	.000
+10	.0000	.0000	.000
+15	.4774	.5894	8.358
+20	.7577	.9354	13.265
+25	3.6406	4.4945	63.738
+30	8.2544	10.1906	144.515
+35	14.1680	17.4914	248.049
+40	14.8456	18.3279	259.912
+45	10.4720	12.9284	183.340
+50	5.7781	7.1334	101.161
+55	2.5256	3.1180	44.217
+60	.6653	.8213	11.648
+65	.0745	.0920	1.305
+70	.0000	.0000	.000
+75	.6499	.0000	94.645
+80	1.6595	.0000	251.764
+85	1.8488	.0000	288.820
+90	1.5460	.0000	248.973
+95	.5433	.0000	89.961
+100	.0579	.0000	9.955
+105	.0000	.0000	.000
+110	.0000	.0000	.000

TOTAL ANNUAL GAS CONSUMPTION IS 76.1224 *10^6 BTU

TOTAL ANNUAL ELECTRIC CONSUMPTION IS 2063.63 KWH

ADVANCED GAS FURNACE/ADVANCED ELECTRIC AC - MEDFORD

BIN	LOAD	GAS USED	ELECTRIC USED
-10	.0000	.0000	.000
-5	.0000	.0000	.000
+0	.0000	.0000	.000
+5	.0000	.0000	.000
+10	.0000	.0000	.000
+15	.4774	.5551	8.371
+20	.7577	.8810	13.285
+25	3.6406	4.2332	63.834
+30	8.2544	9.5981	144.734
+35	14.1680	16.4744	248.424
+40	14.8456	17.2623	260.305
+45	10.4720	12.1767	183.618
+50	5.7781	6.7187	101.314
+55	2.5256	2.9367	44.284
+60	.6653	.7736	11.665
+65	.0745	.0867	1.307
+70	.0000	.0000	.000
+75	.6499	.0000	71.348
+80	1.6595	.0000	189.058
+85	1.8488	.0000	216.515
+90	1.5460	.0000	188.534
+95	.5433	.0000	69.817
+100	.0579	.0000	7.734
+105	.0000	.0000	.000
+110	.0000	.0000	.000

TOTAL ANNUAL GAS CONSUMPTION IS 71.6967 *10^6 BTU

TOTAL ANNUAL ELECTRIC CONSUMPTION IS 1824.15 KWH

Table 22

ELECTRIC HEAT PUMP - MEDFORD

BIN	LOAD	ELECTRIC USED
-10	.0000	.00
-5	.0000	.00
+0	.0000	.00
+5	.0000	.00
+10	.0000	.00
+15	.4774	106.41
+20	.7577	148.30
+25	3.6406	618.86
+30	8.2544	1056.00
+35	14.1680	1791.97
+40	14.8456	1835.94
+45	10.4720	1293.06
+50	5.7781	710.13
+55	2.5256	308.20
+60	.6653	80.44
+65	.0745	8.60
+70	.0000	.00
+75	.6499	84.47
+80	1.6595	221.84
+85	1.8488	254.26
+90	1.5460	218.25
+95	.5433	79.34
+100	.0579	8.82
+105	.0000	.00
+110	.0000	.00

TOTAL ANNUAL ELECTRIC CONSUMPTION IS 8824.89 KWH

ADVANCED ELECTRIC HEAT PUMP - MEDFORD

BIN	LOAD	ELECTRIC USED
-10	.0000	.00
-5	.0000	.00
+0	.0000	.00
+5	.0000	.00
+10	.0000	.00
+15	.4774	107.61
+20	.7577	149.96
+25	3.6406	601.49
+30	8.2544	1062.12
+35	14.1680	1821.78
+40	14.8456	1866.67
+45	10.4720	1102.96
+50	5.7781	600.34
+55	2.5256	265.04
+60	.6653	70.55
+65	.0745	7.59
+70	.0000	.00
+75	.6499	74.66
+80	1.6595	198.31
+85	1.8488	226.93
+90	1.5460	193.38
+95	.5433	75.78
+100	.0579	8.35
+105	.0000	.00
+110	.0000	.00

TOTAL ANNUAL ELECTRIC CONSUMPTION IS 8433.52 KWH

Table 23

Gas and Electric Prices
1980

	GAS ($/$10^6$ BTU)	ELECTRIC ($/KWH)
New York	6.33	0.103
Madison	4.43	0.044
Medford	6.45	0.030
Omaha	2.75	0.033
Fresno	3.20	0.044
Nashville	2.84	0.047
Fort Worth	3.34	0.031

Figure 5

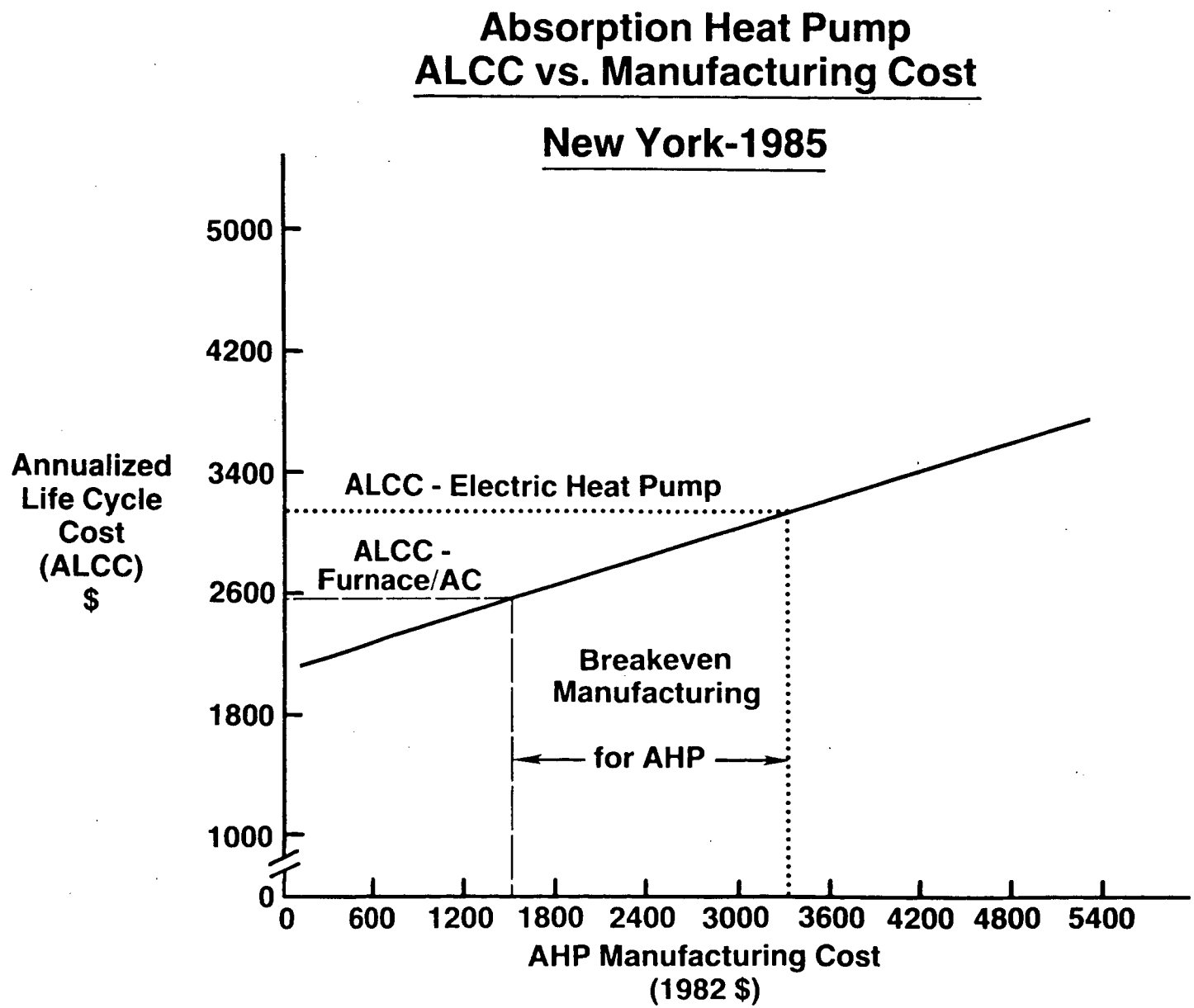
Absorption Heat Pump
ALCC vs. Manufacturing Cost
New York-1985
Annualized Life Cycle Cost (ALCC) $
5000
4200
3400
2600
1800
1000
0
ALCC - Electric Heat Pump
ALCC - Furnace/AC
Breakeven Manufacturing
for AHP
0
600
1200
1800
2400
3000
3600
4200
4800
5400
AHP Manufacturing Cost
(1982 $)

Figure 6

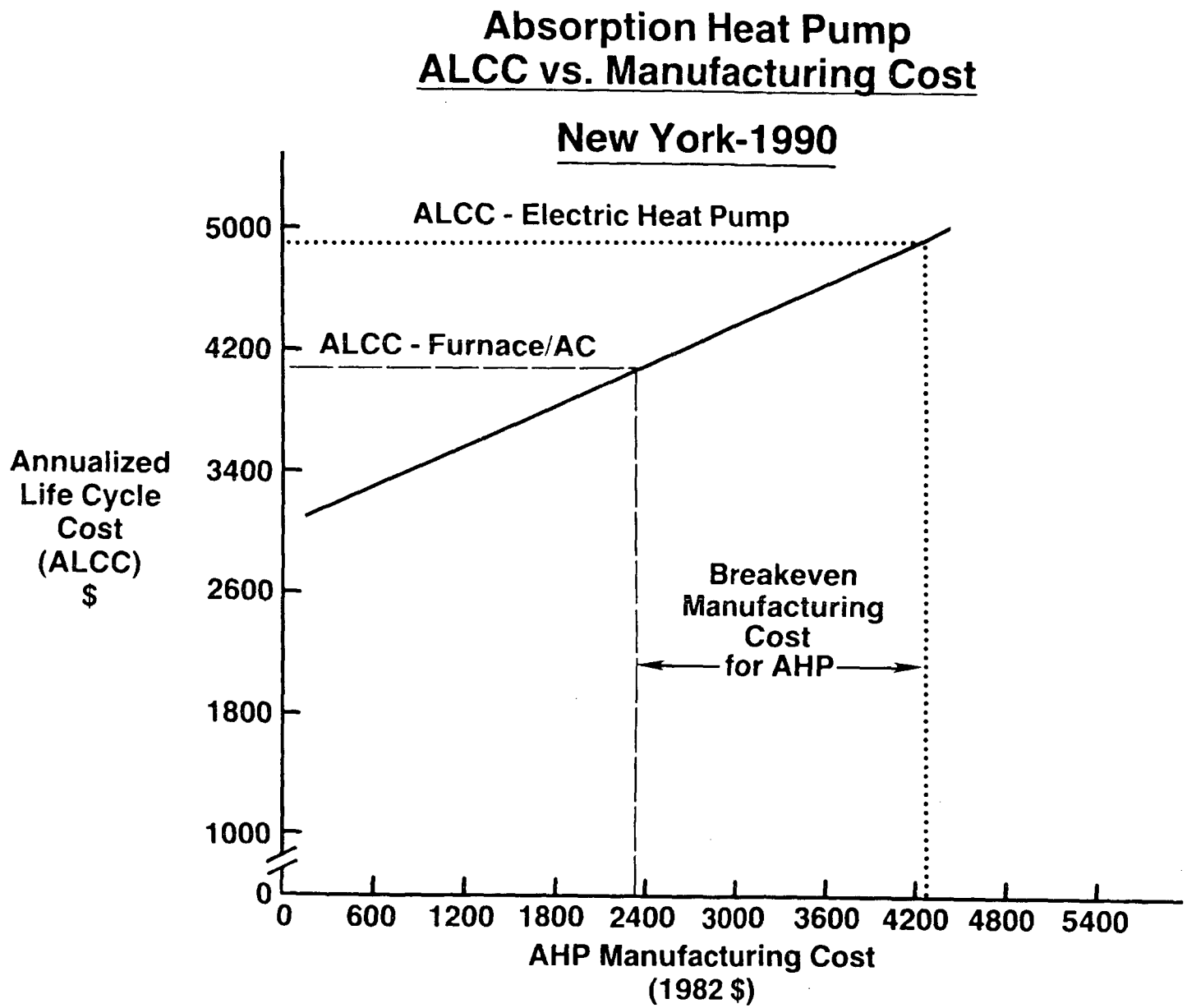
Absorption Heat Pump
ALCC vs. Manufacturing Cost
New York-1990
ALCC - Electric Heat Pump
ALCC - Furnace/AC
Breakeven
Manufacturing
Cost
for AHP
Annualized
Life Cycle
Cost
(ALCC)
$
5000
4200
3400
2600
1800
1000
0
0
600
1200
1800
2400
3000
3600
4200
4800
5400
AHP Manufacturing Cost
(1982 $)

Figure 7

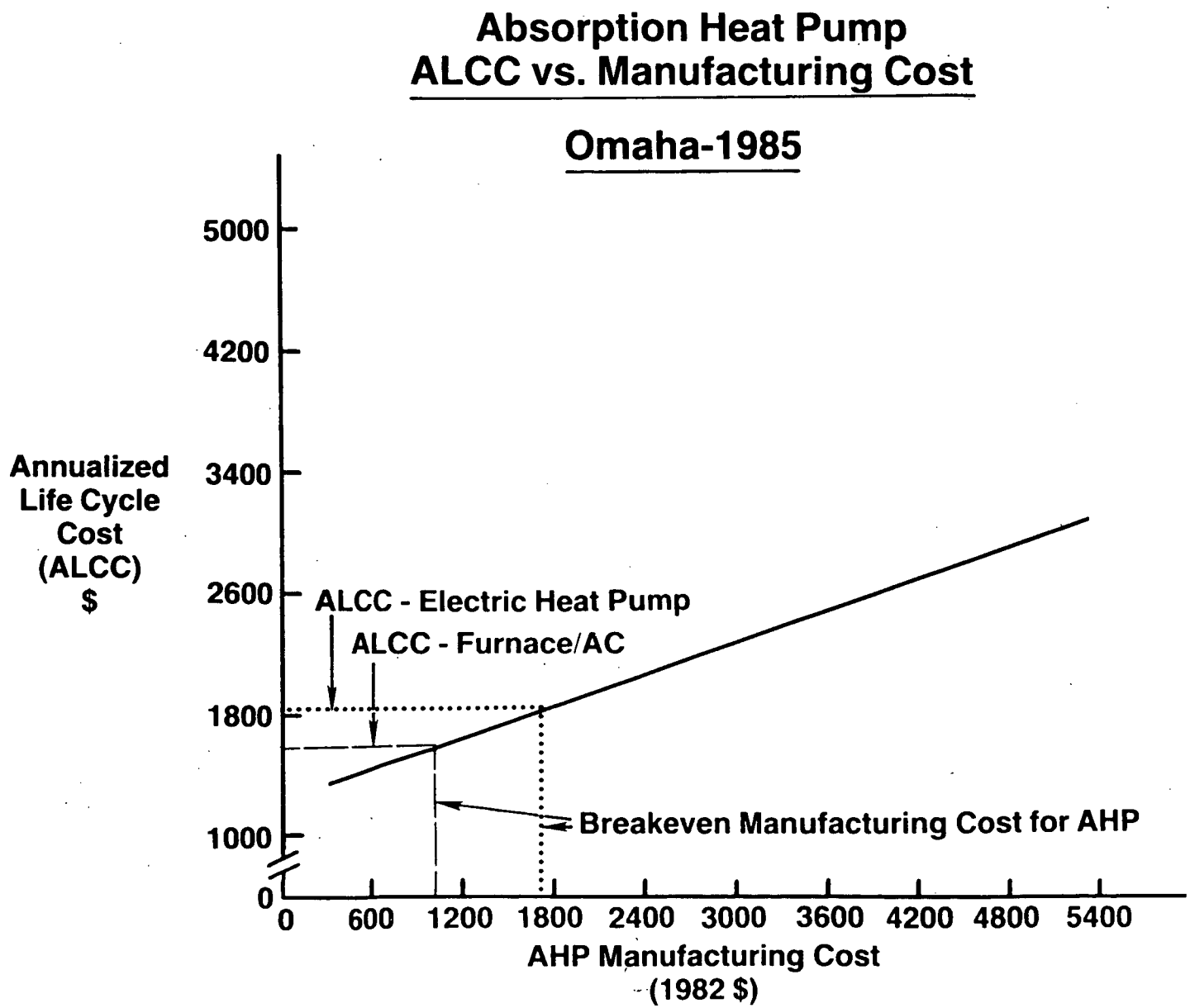
Absorption Heat Pump
ALCC vs. Manufacturing Cost
Omaha-1985
Annualized Life Cycle Cost (ALCC) $
5000
4200
3400
2600
1800
1000
0
ALCC - Electric Heat Pump
ALCC - Furnace/AC
Breakeven Manufacturing Cost for AHP
0
600
1200
1800
2400
3000
3600
4200
4800
5400
AHP Manufacturing Cost
(1982 $)

Figure 8

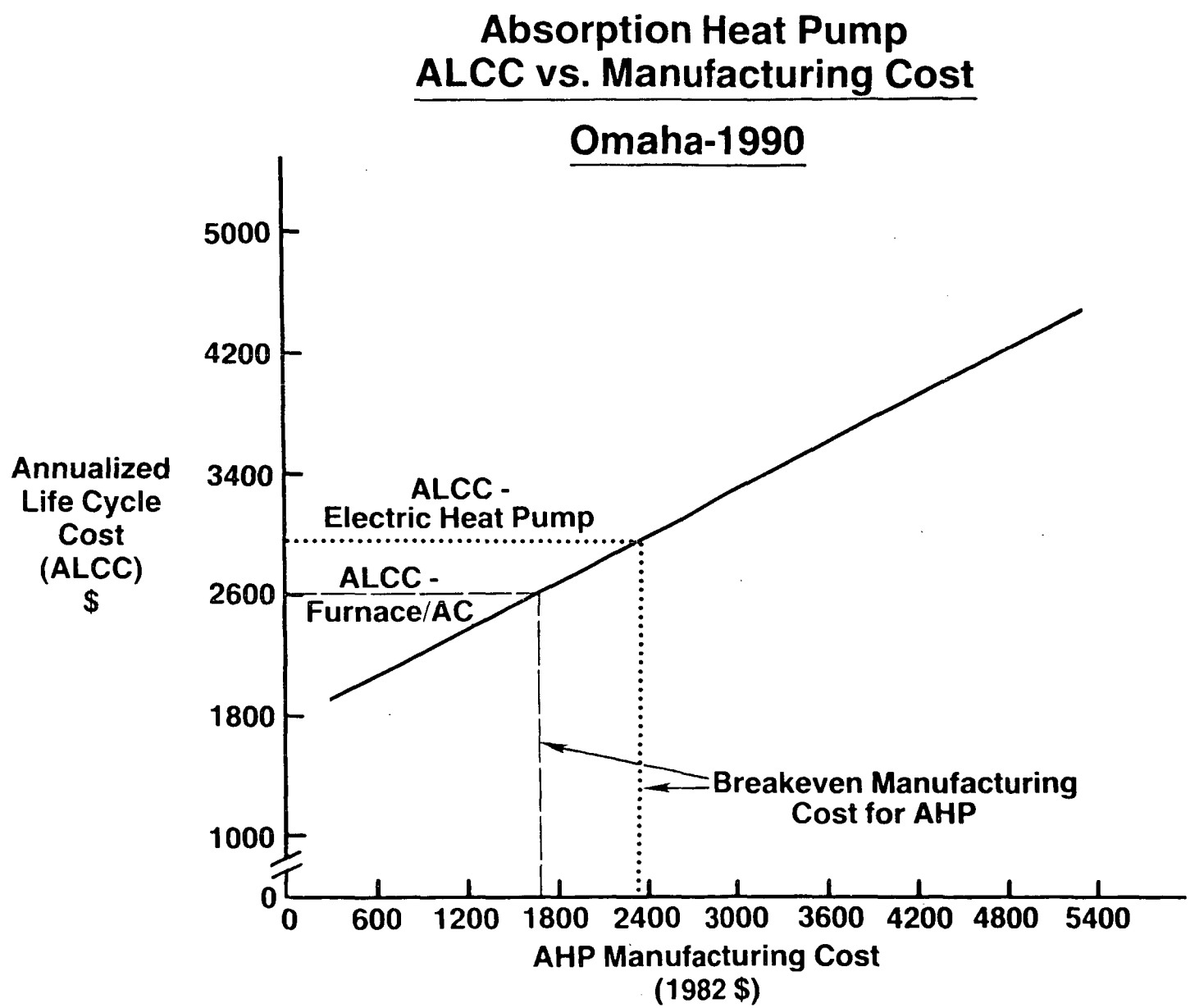
Absorption Heat Pump
ALCC vs. Manufacturing Cost
Omaha-1990
Annualized Life Cycle Cost (ALCC) $
5000
4200
3400
2600
1800
1000
0
ALCC - Electric Heat Pump
ALCC - Furnace/AC
Breakeven Manufacturing Cost for AHP
0
600
1200
1800
2400
3000
3600
4200
4800
5400
AHP Manufacturing Cost (1982 $)

Figure 9

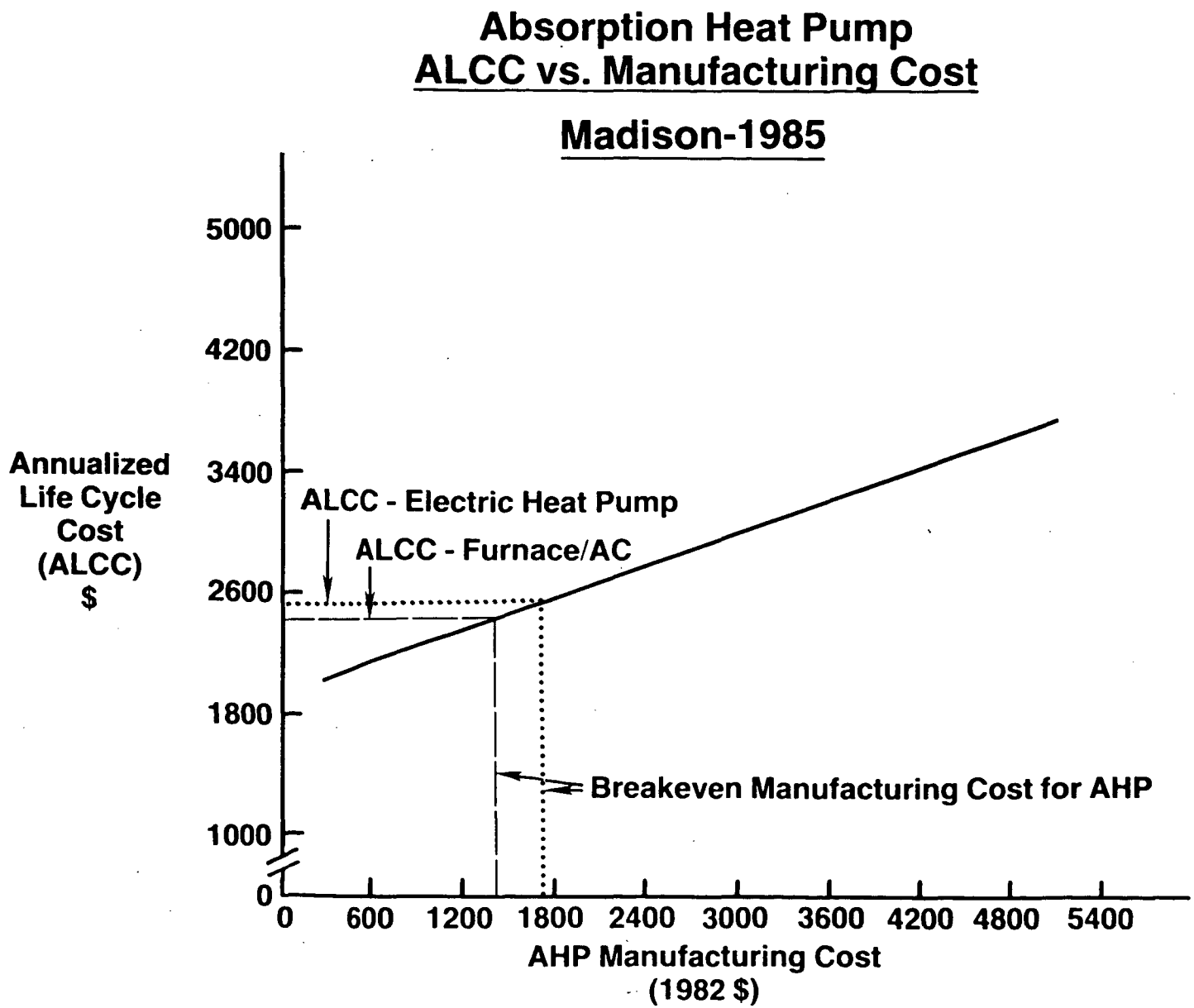
Absorption Heat Pump
ALCC vs. Manufacturing Cost
Madison-1985
Annualized Life Cycle Cost (ALCC) $
5000
4200
3400
2600
1800
1000
0
ALCC - Electric Heat Pump
ALCC - Furnace/AC
Breakeven Manufacturing Cost for AHP
0
600
1200
1800
2400
3000
3600
4200
4800
5400
AHP Manufacturing Cost
(1982 $)

Figure 10

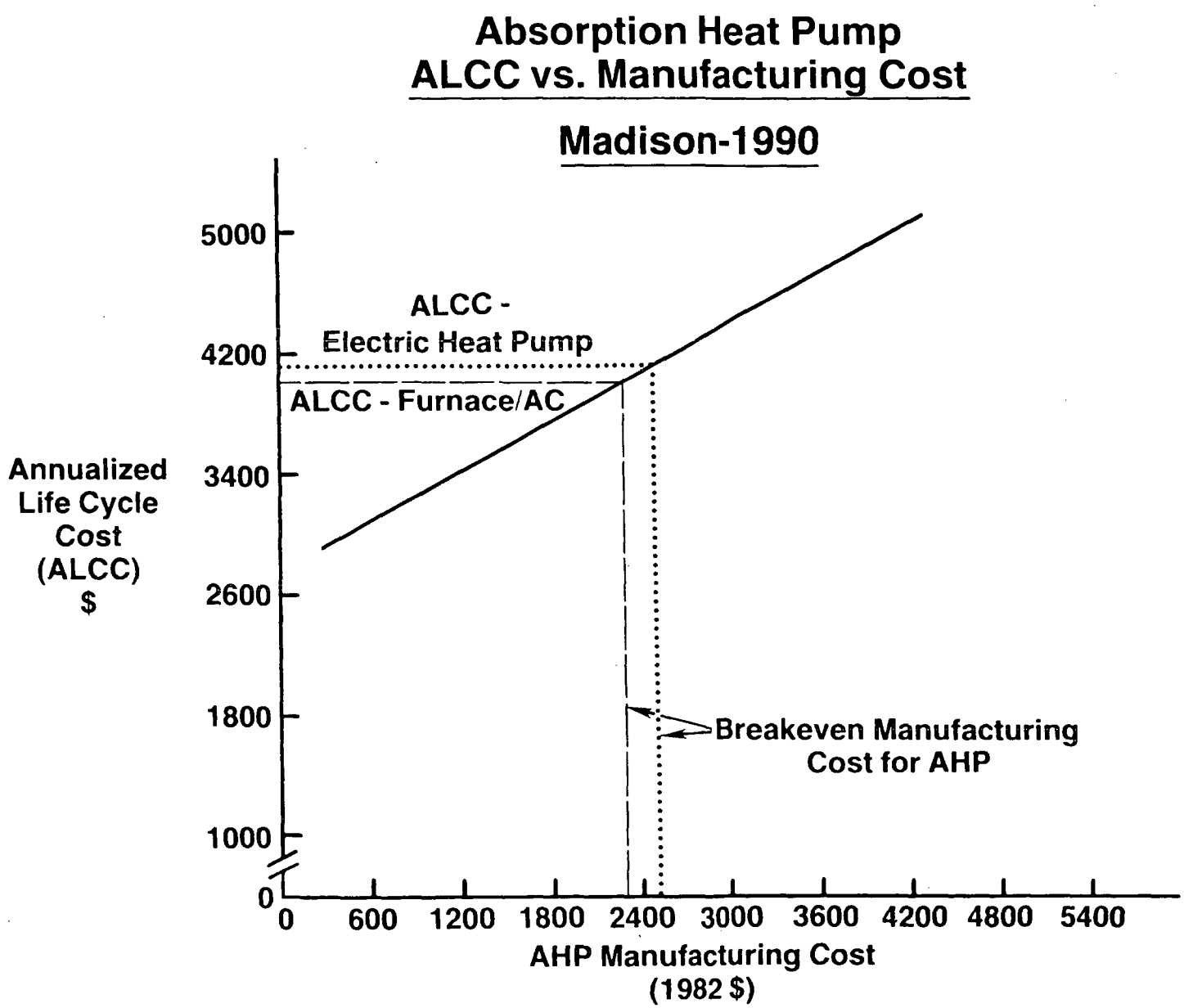
Absorption Heat Pump
ALCC vs. Manufacturing Cost
Madison-1990
Annualized Life Cycle Cost (ALCC) $
5000
4200
3400
2600
1800
1000
0
ALCC - Electric Heat Pump
ALCC - Furnace/AC
Breakeven Manufacturing Cost for AHP
0
600
1200
1800
2400
3000
3600
4200
4800
5400
AHP Manufacturing Cost (1982 $)

Figure 11

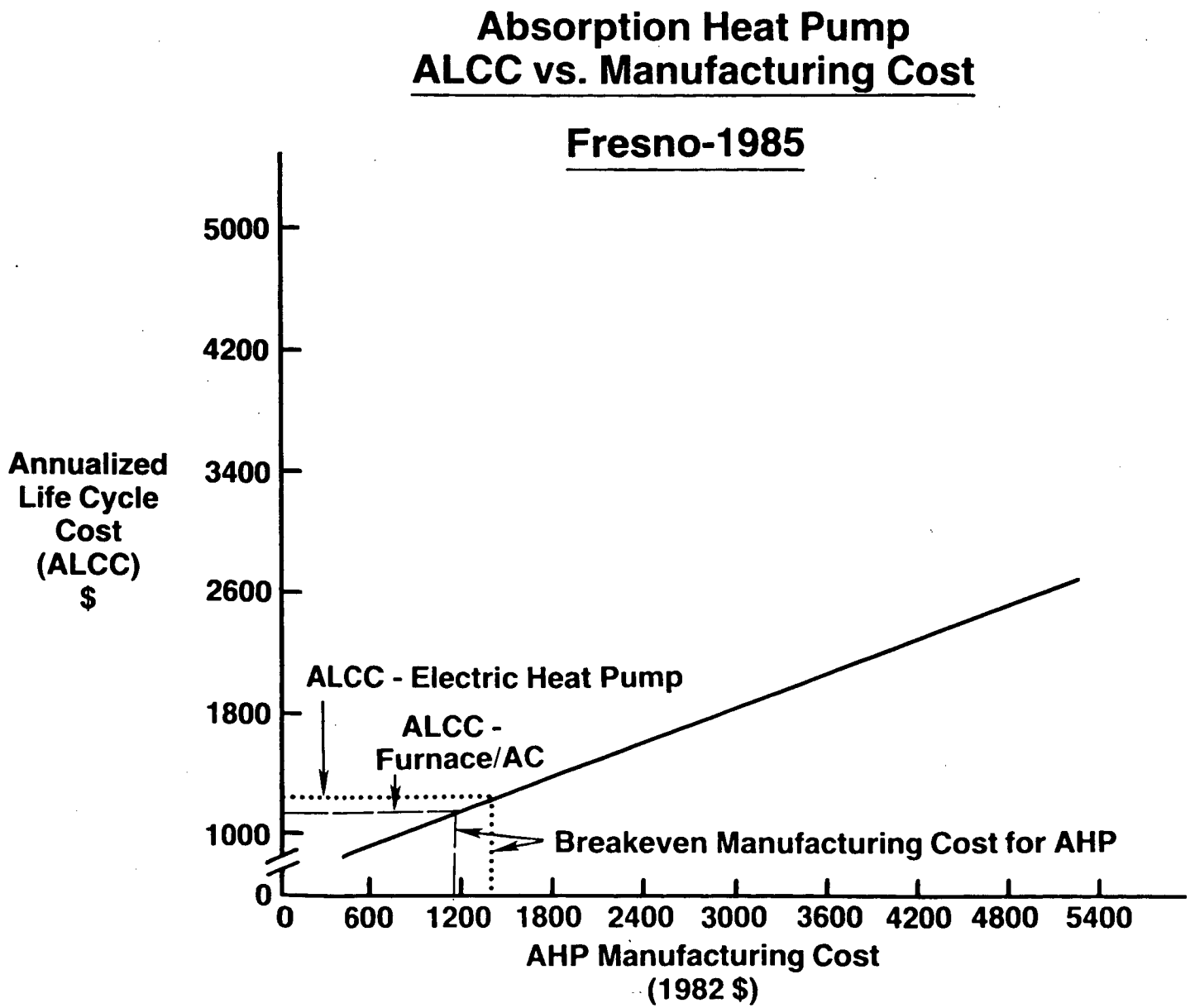
Absorption Heat Pump
ALCC vs. Manufacturing Cost
Fresno-1985
Annualized Life Cycle Cost (ALCC) $
5000
4200
3400
2600
1800
1000
0
ALCC - Electric Heat Pump
ALCC - Furnace/AC
Breakeven Manufacturing Cost for AHP
0
600
1200
1800
2400
3000
3600
4200
4800
5400
AHP Manufacturing Cost (1982 $)

Figure 12

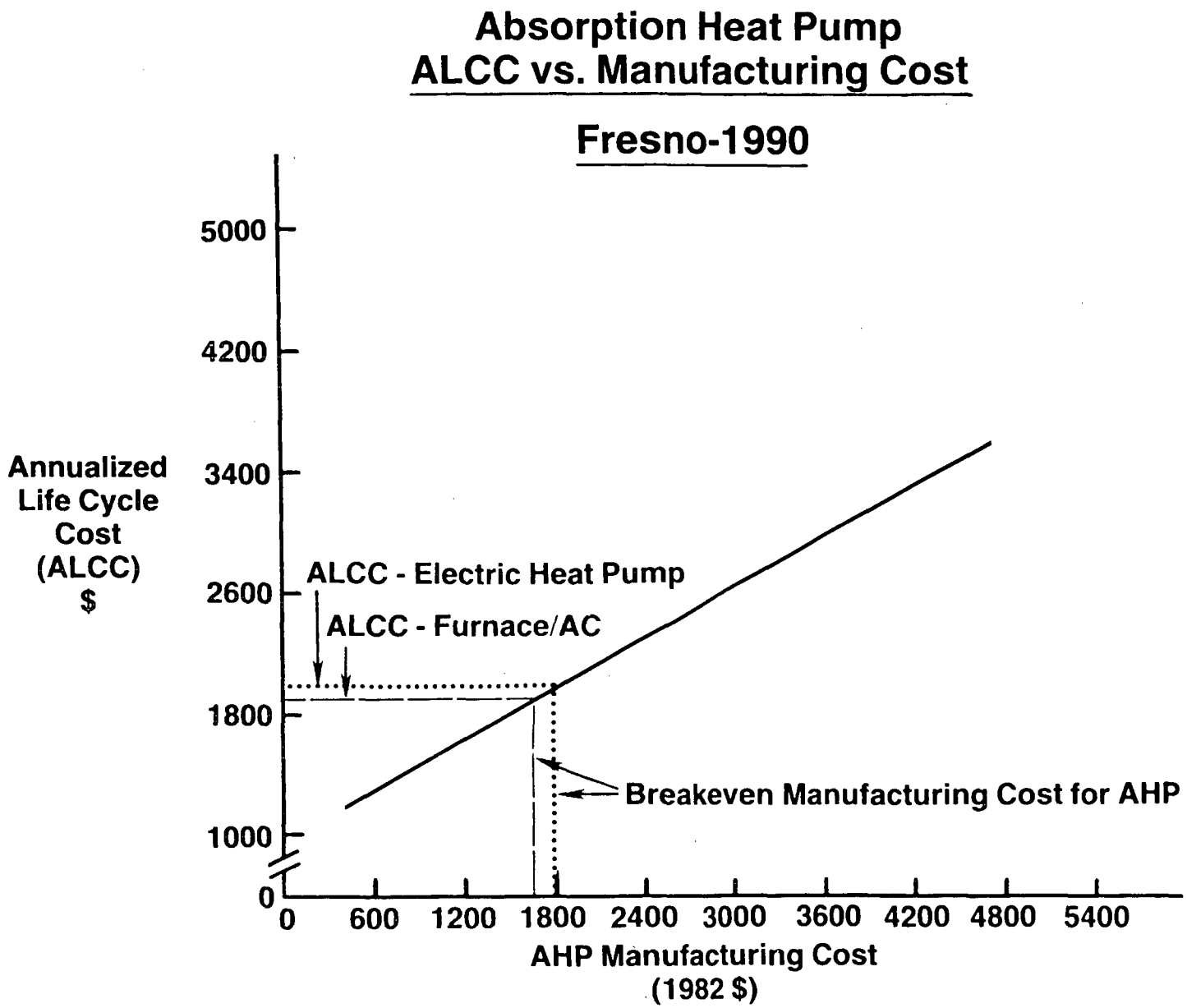
Absorption Heat Pump
ALCC vs. Manufacturing Cost
Fresno-1990
Annualized Life Cycle Cost (ALCC) $
5000
4200
3400
2600
1800
1000
0
ALCC - Electric Heat Pump
ALCC - Furnace/AC
Breakeven Manufacturing Cost for AHP
0
600
1200
1800
2400
3000
3600
4200
4800
5400
AHP Manufacturing Cost
(1982 $)

Figure 13

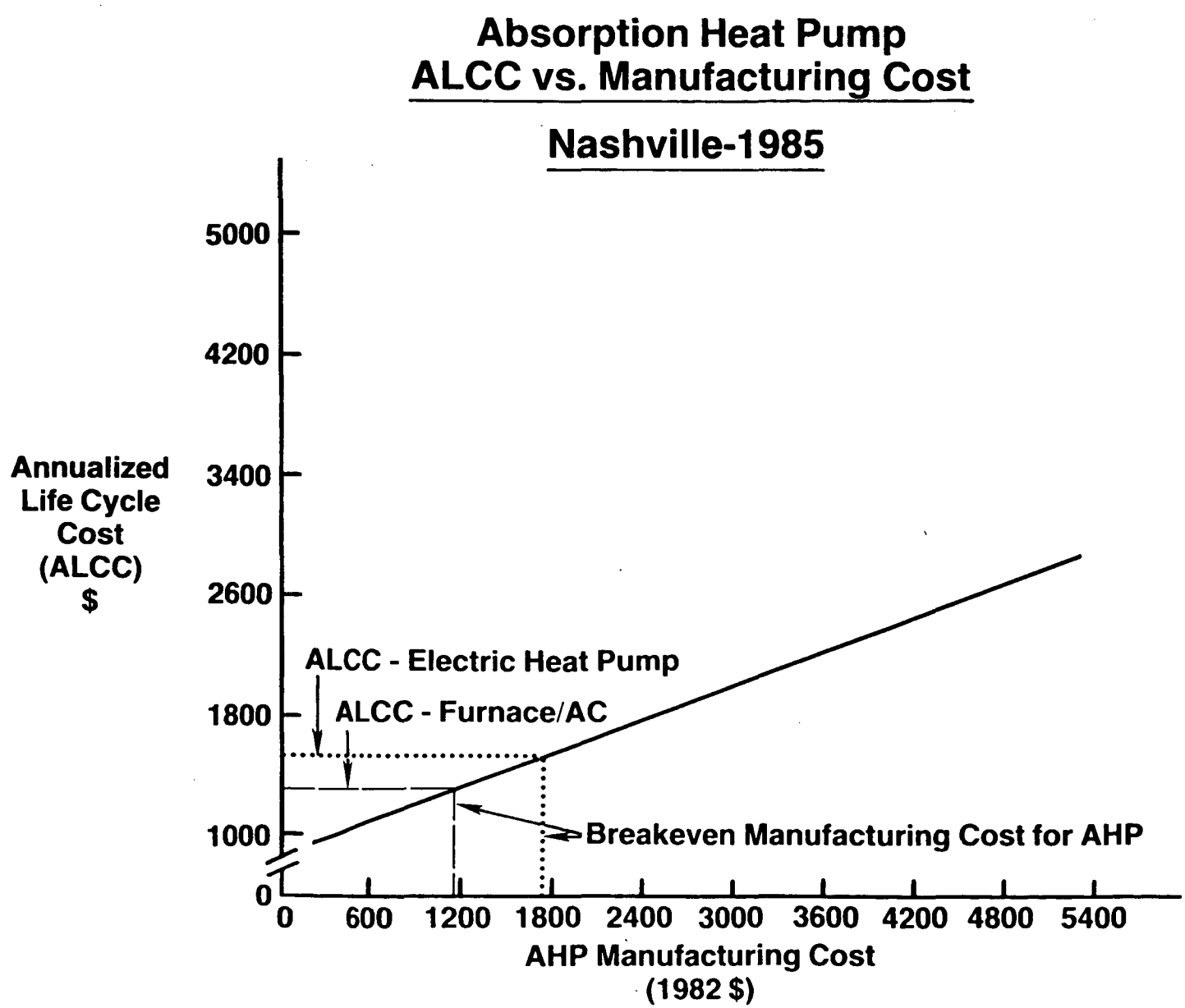
Absorption Heat Pump
ALCC vs. Manufacturing Cost
Nashville-1985
Annualized Life Cycle Cost (ALCC) $
5000
4200
3400
2600
1800
1000
0
ALCC - Electric Heat Pump
ALCC - Furnace/AC
Breakeven Manufacturing Cost for AHP
0
600
1200
1800
2400
3000
3600
4200
4800
5400
AHP Manufacturing Cost
(1982 $)

Figure 14

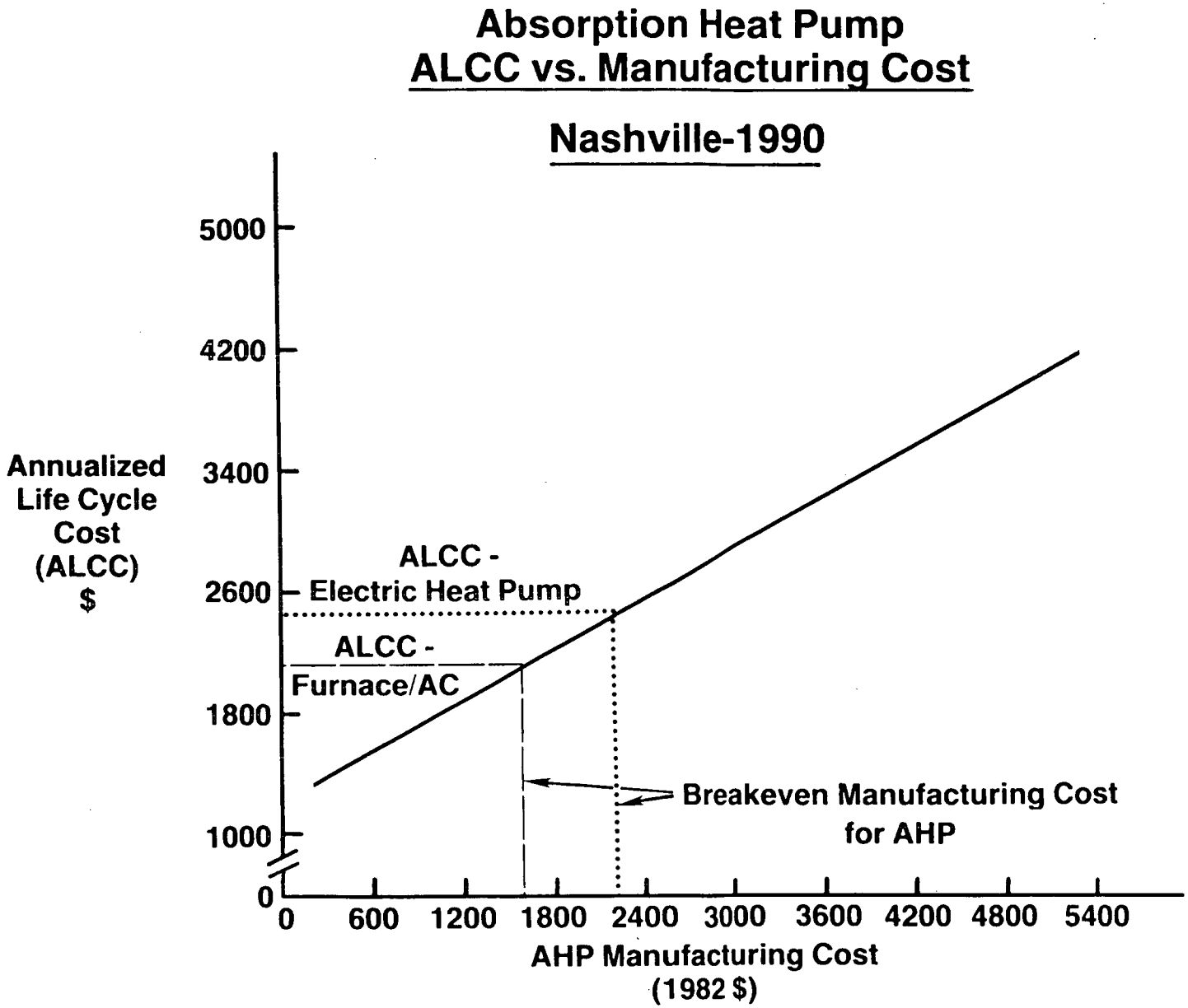
Absorption Heat Pump
ALCC vs. Manufacturing Cost
Nashville-1990
Annualized Life Cycle Cost (ALCC) $
5000
4200
3400
2600
1800
1000
0
ALCC - Electric Heat Pump
ALCC - Furnace/AC
Breakeven Manufacturing Cost for AHP
0
600
1200
1800
2400
3000
3600
4200
4800
5400
AHP Manufacturing Cost (1982 $)

Figure 15

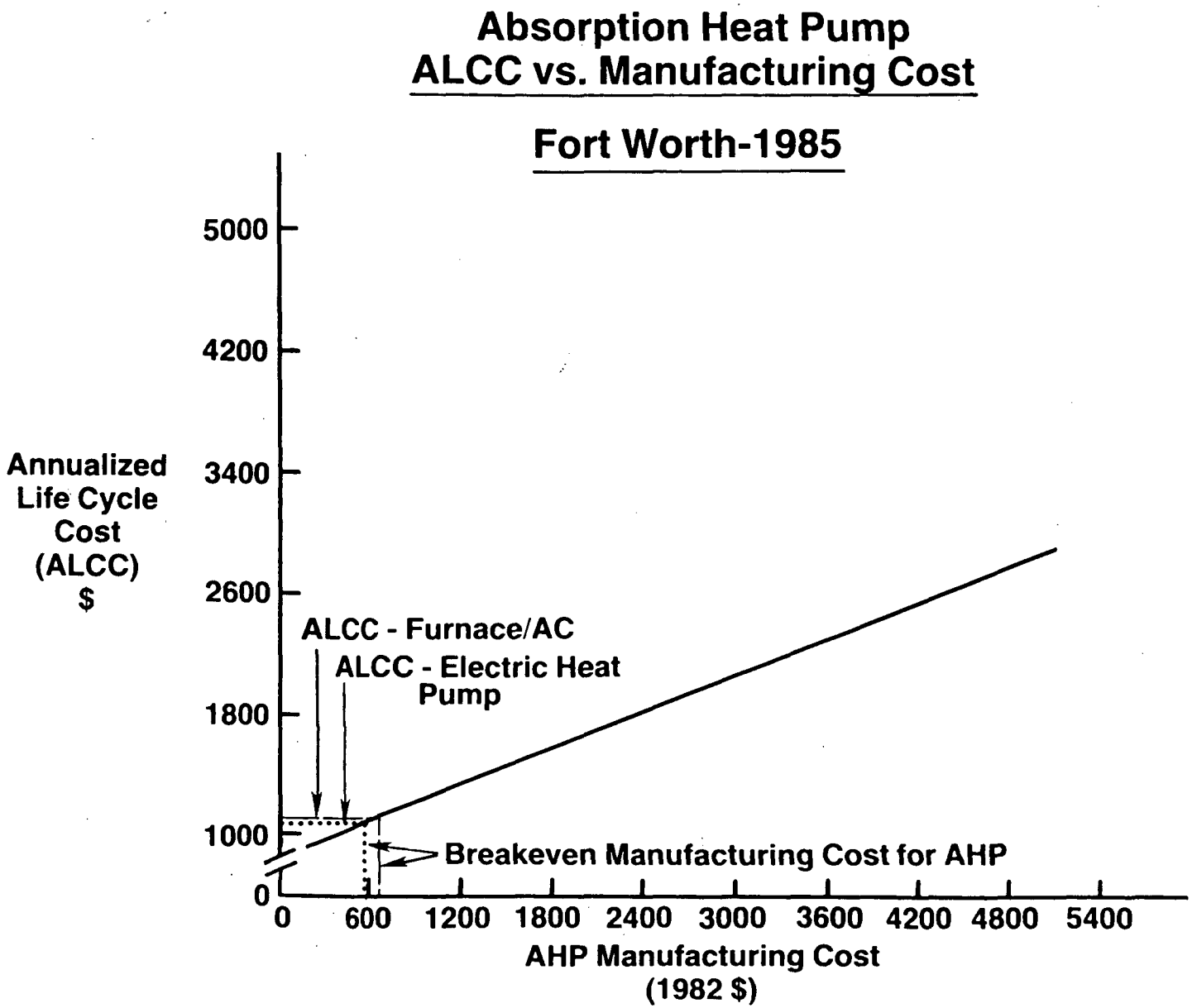
Absorption Heat Pump
ALCC vs. Manufacturing Cost
Fort Worth-1985
Annualized Life Cycle Cost (ALCC) $
5000
4200
3400
2600
1800
1000
0
ALCC - Furnace/AC
ALCC - Electric Heat Pump
Breakeven Manufacturing Cost for AHP
0
600
1200
1800
2400
3000
3600
4200
4800
5400
AHP Manufacturing Cost (1982 $)

Figure 16

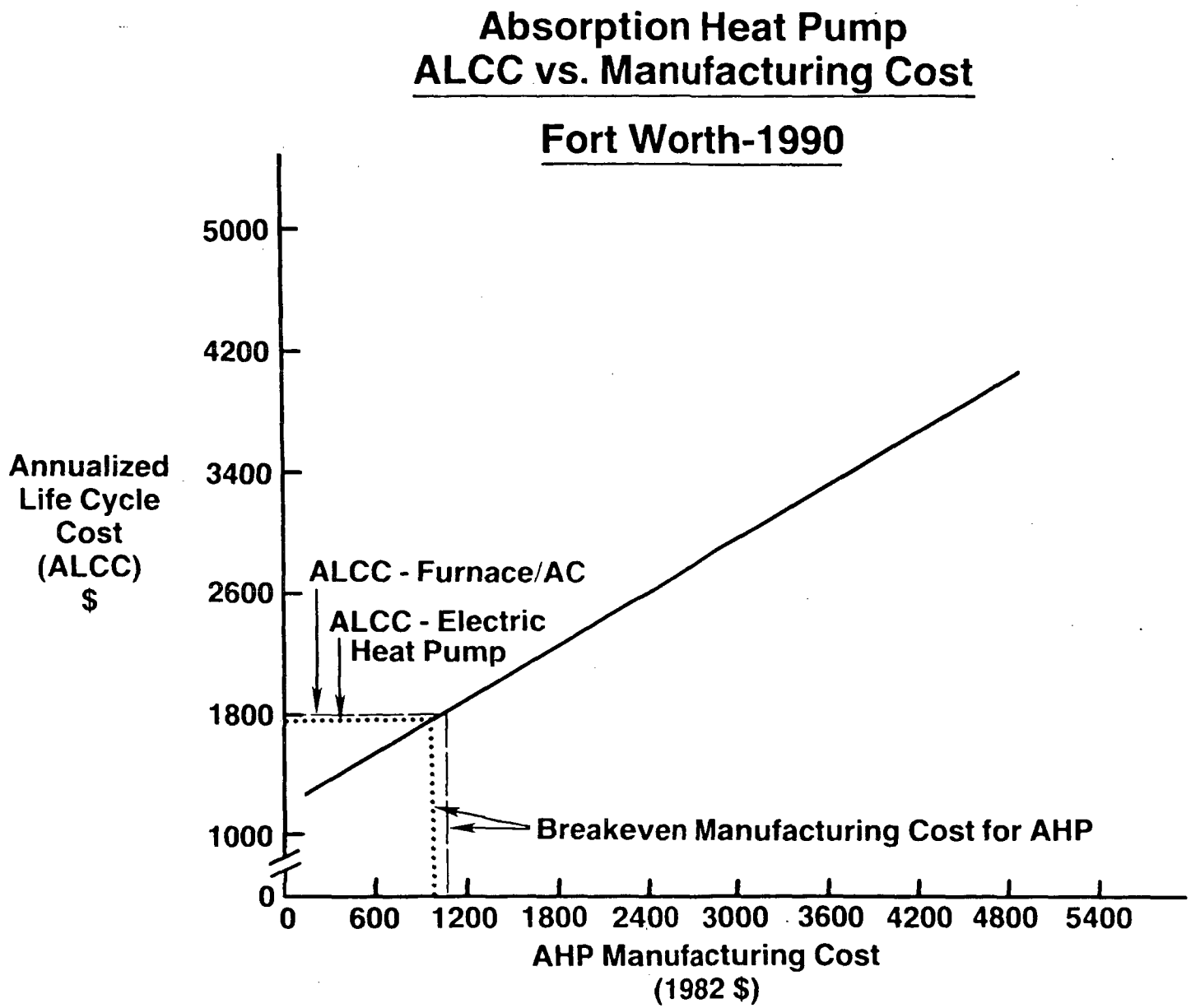
Absorption Heat Pump
ALCC vs. Manufacturing Cost
Fort Worth-1990
Annualized Life Cycle Cost (ALCC) $
5000
4200
3400
2600
1800
1000
0
ALCC - Furnace/AC
ALCC - Electric Heat Pump
Breakeven Manufacturing Cost for AHP
0
600
1200
1800
2400
3000
3600
4200
4800
5400
AHP Manufacturing Cost
(1982 $)

Figure 17

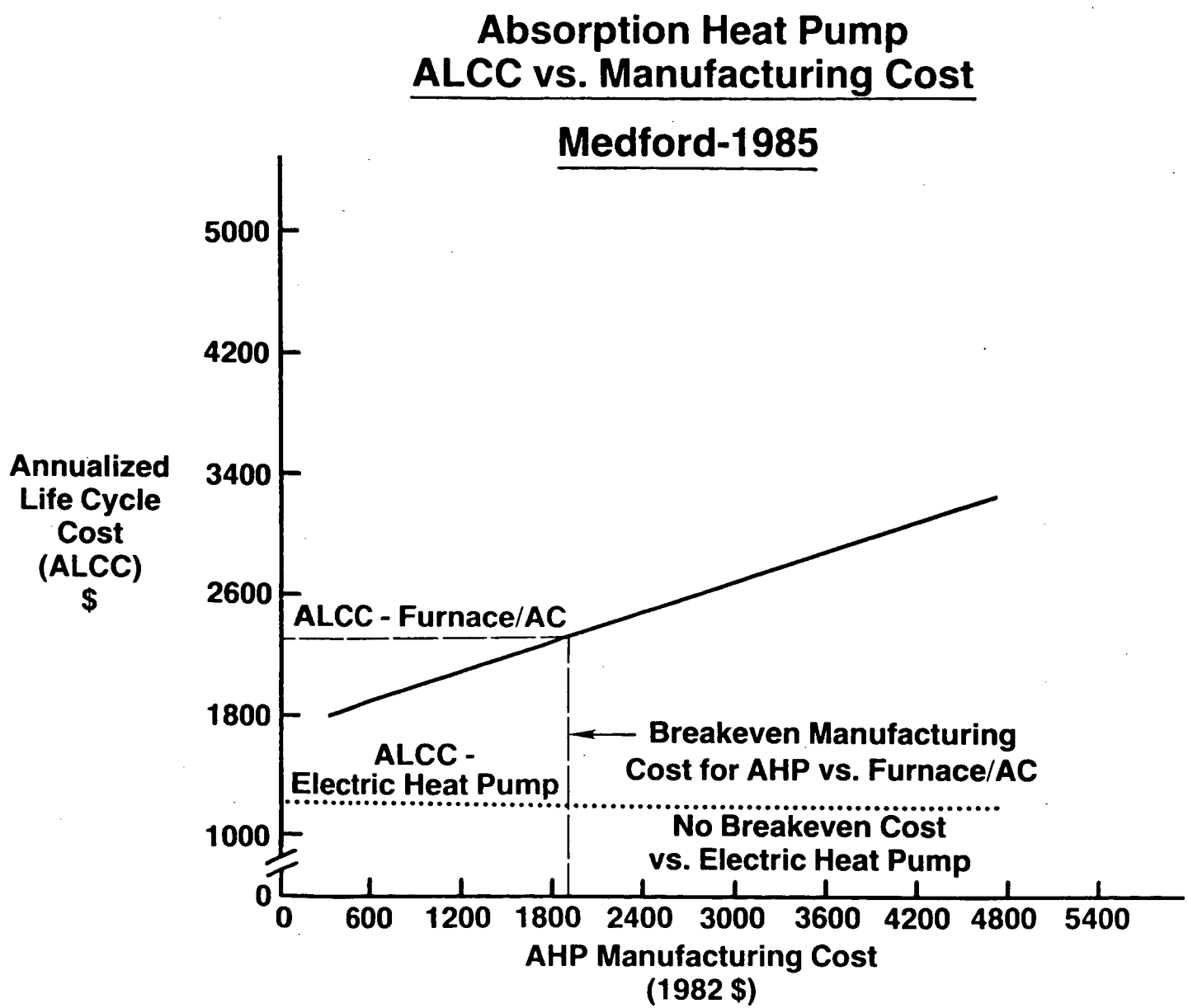
Absorption Heat Pump
ALCC vs. Manufacturing Cost
Medford-1985
Annualized Life Cycle Cost (ALCC) $
5000
4200
3400
2600
1800
1000
0
ALCC - Furnace/AC
ALCC - Electric Heat Pump
Breakeven Manufacturing Cost for AHP vs. Furnace/AC
No Breakeven Cost vs. Electric Heat Pump
0
600
1200
1800
2400
3000
3600
4200
4800
5400
AHP Manufacturing Cost (1982 $)

Figure 18

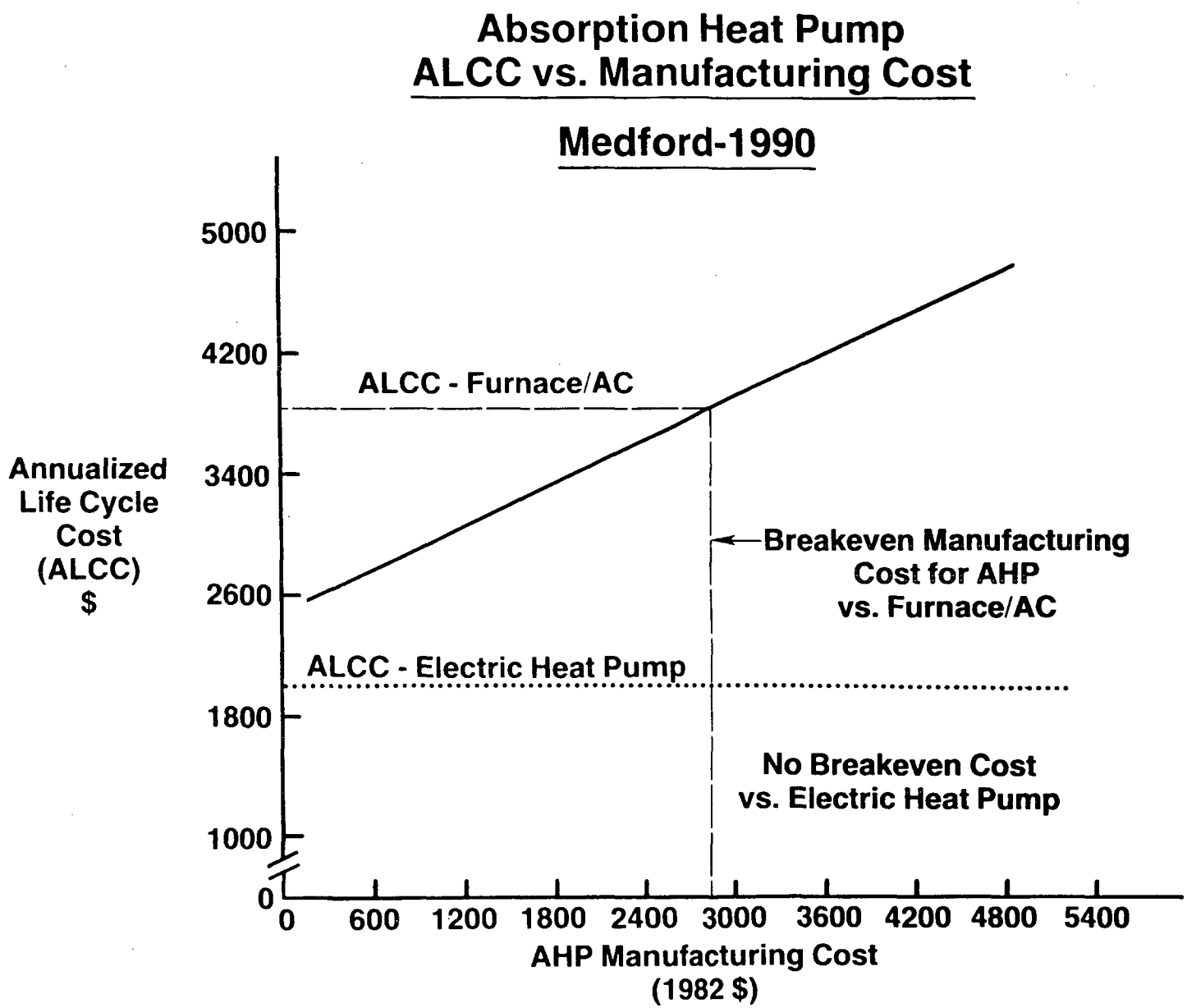
Absorption Heat Pump
ALCC vs. Manufacturing Cost
Medford-1990
Annualized Life Cycle Cost (ALCC) $
5000
4200
3400
2600
1800
1000
0
ALCC - Furnace/AC
ALCC - Electric Heat Pump
Breakeven Manufacturing Cost for AHP vs. Furnace/AC
No Breakeven Cost vs. Electric Heat Pump
0
600
1200
1800
2400
3000
3600
4200
4800
5400
AHP Manufacturing Cost (1982 $)

Figure 19

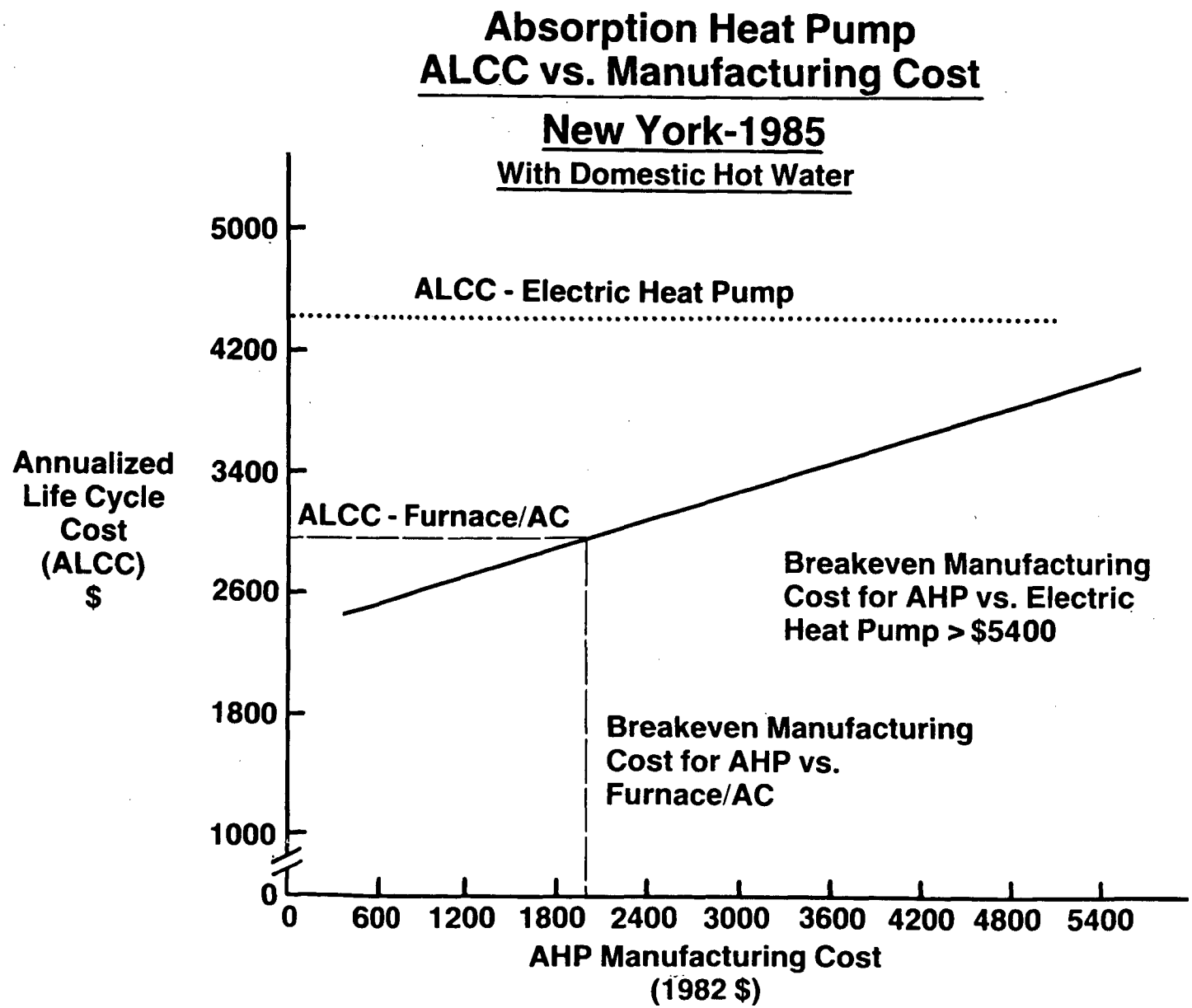
Absorption Heat Pump
ALCC vs. Manufacturing Cost
New York-1985
With Domestic Hot Water
Annualized Life Cycle Cost (ALCC) $
5000
4200
3400
2600
1800
1000
0
ALCC - Electric Heat Pump
ALCC - Furnace/AC
Breakeven Manufacturing Cost for AHP vs. Electric Heat Pump > $5400
Breakeven Manufacturing Cost for AHP vs. Furnace/AC
0
600
1200
1800
2400
3000
3600
4200
4800
5400
AHP Manufacturing Cost (1982 $)

Figure 20

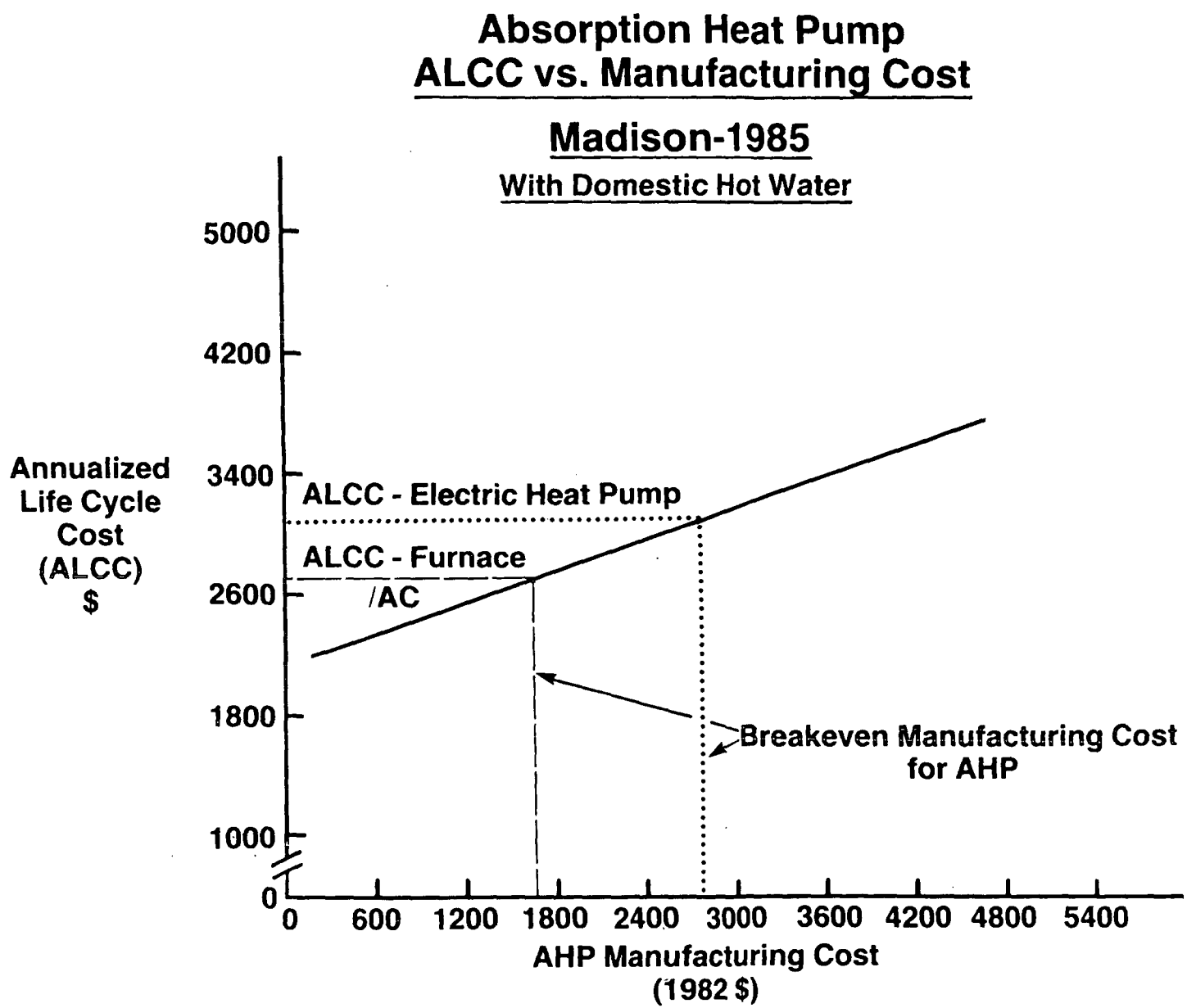
Absorption Heat Pump
ALCC vs. Manufacturing Cost
Madison-1985
With Domestic Hot Water
Annualized Life Cycle Cost (ALCC) $
5000
4200
3400
2600
1800
1000
0
ALCC - Electric Heat Pump
ALCC - Furnace /AC
Breakeven Manufacturing Cost for AHP
0
600
1200
1800
2400
3000
3600
4200
4800
5400
AHP Manufacturing Cost (1982 $)

Figure 21

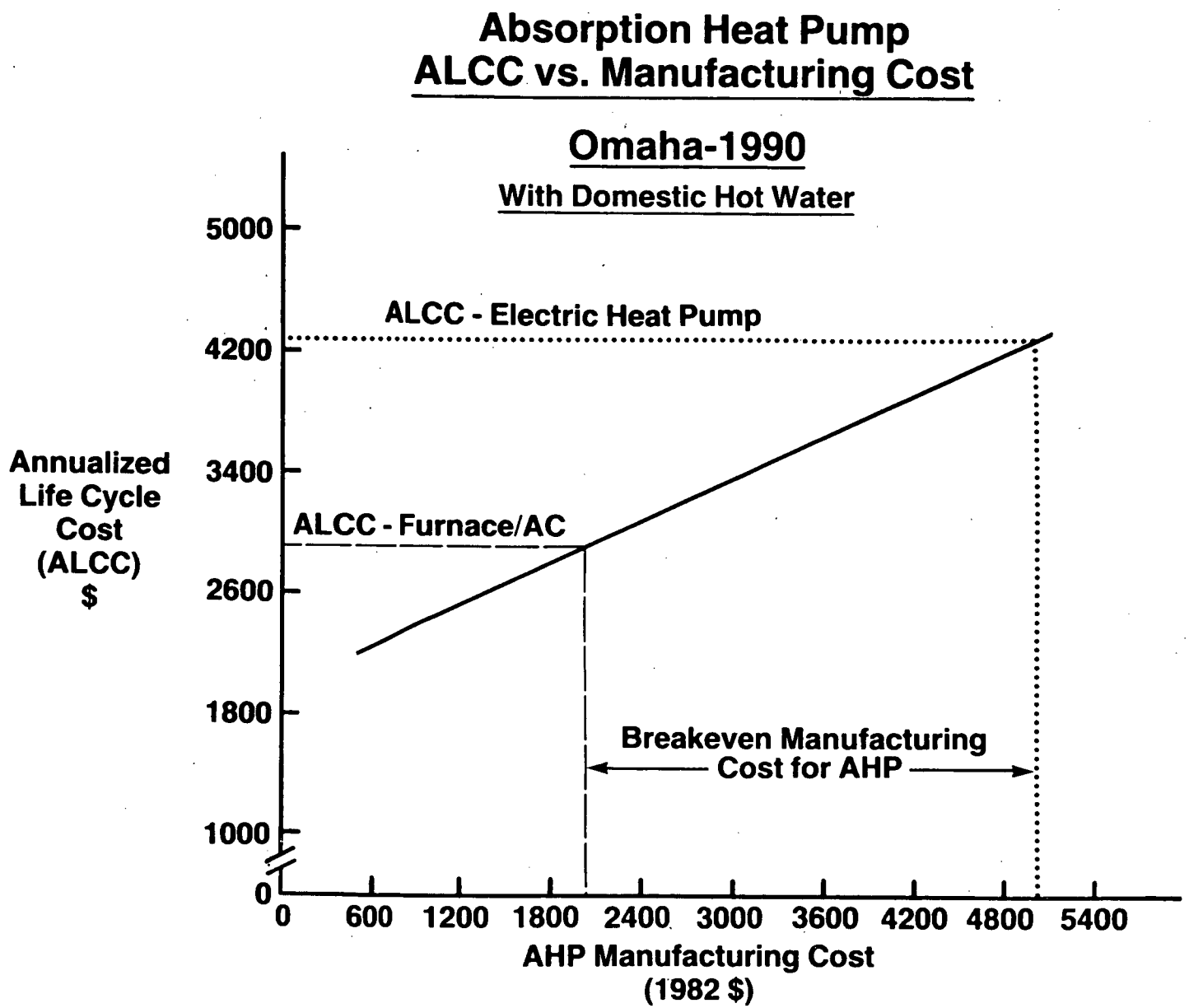
Absorption Heat Pump
ALCC vs. Manufacturing Cost
Omaha-1990
With Domestic Hot Water
ALCC - Electric Heat Pump
ALCC - Furnace/AC
Breakeven Manufacturing Cost for AHP
Annualized Life Cycle Cost (ALCC) $
5000
4200
3400
2600
1800
1000
0
0
600
1200
1800
2400
3000
3600
4200
4800
5400
AHP Manufacturing Cost (1982 $)

Figure 22

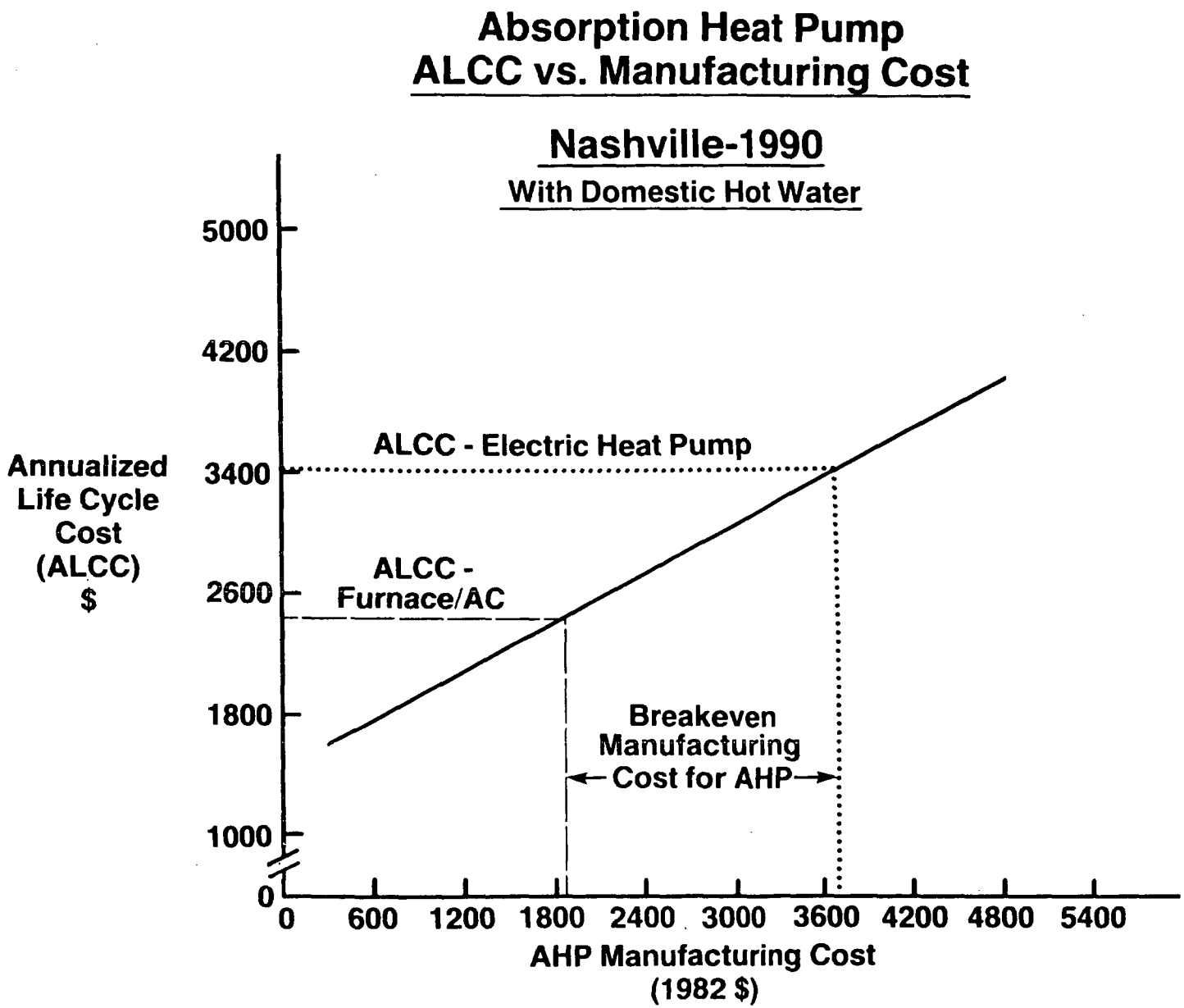
Absorption Heat Pump
ALCC vs. Manufacturing Cost
Nashville-1990
With Domestic Hot Water
Annualized Life Cycle Cost (ALCC) $
5000
4200
3400
2600
1800
1000
0
ALCC - Electric Heat Pump
ALCC - Furnace/AC
Breakeven Manufacturing Cost for AHP
0
600
1200
1800
2400
3000
3600
4200
4800
5400
AHP Manufacturing Cost (1982 $)

Figure 23

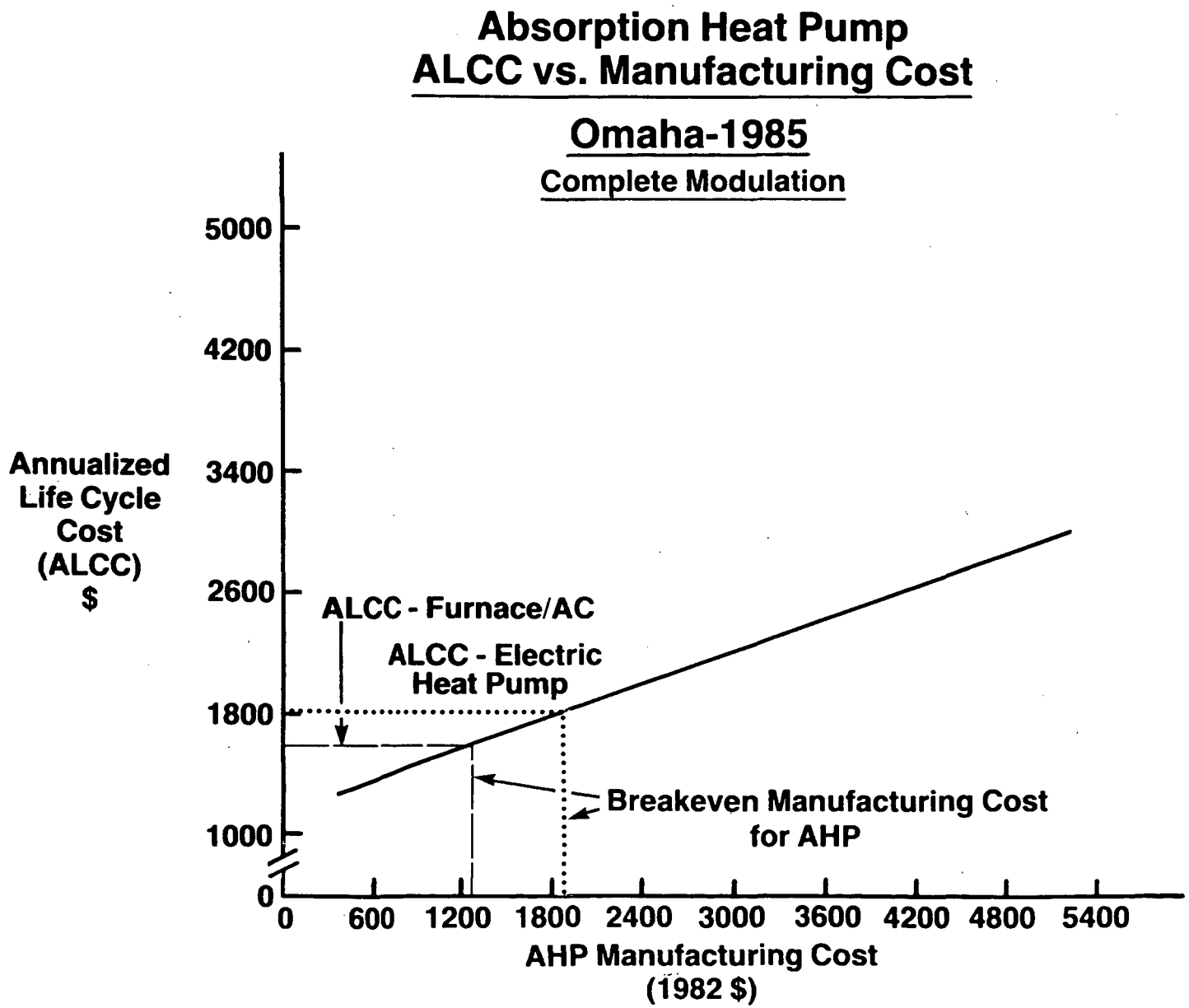
Absorption Heat Pump
ALCC vs. Manufacturing Cost
Omaha-1985
Complete Modulation
Annualized Life Cycle Cost (ALCC) $
5000
4200
3400
2600
1800
1000
0
ALCC - Furnace/AC
ALCC - Electric Heat Pump
Breakeven Manufacturing Cost for AHP
0
600
1200
1800
2400
3000
3600
4200
4800
5400
AHP Manufacturing Cost (1982 $)

Figure 24

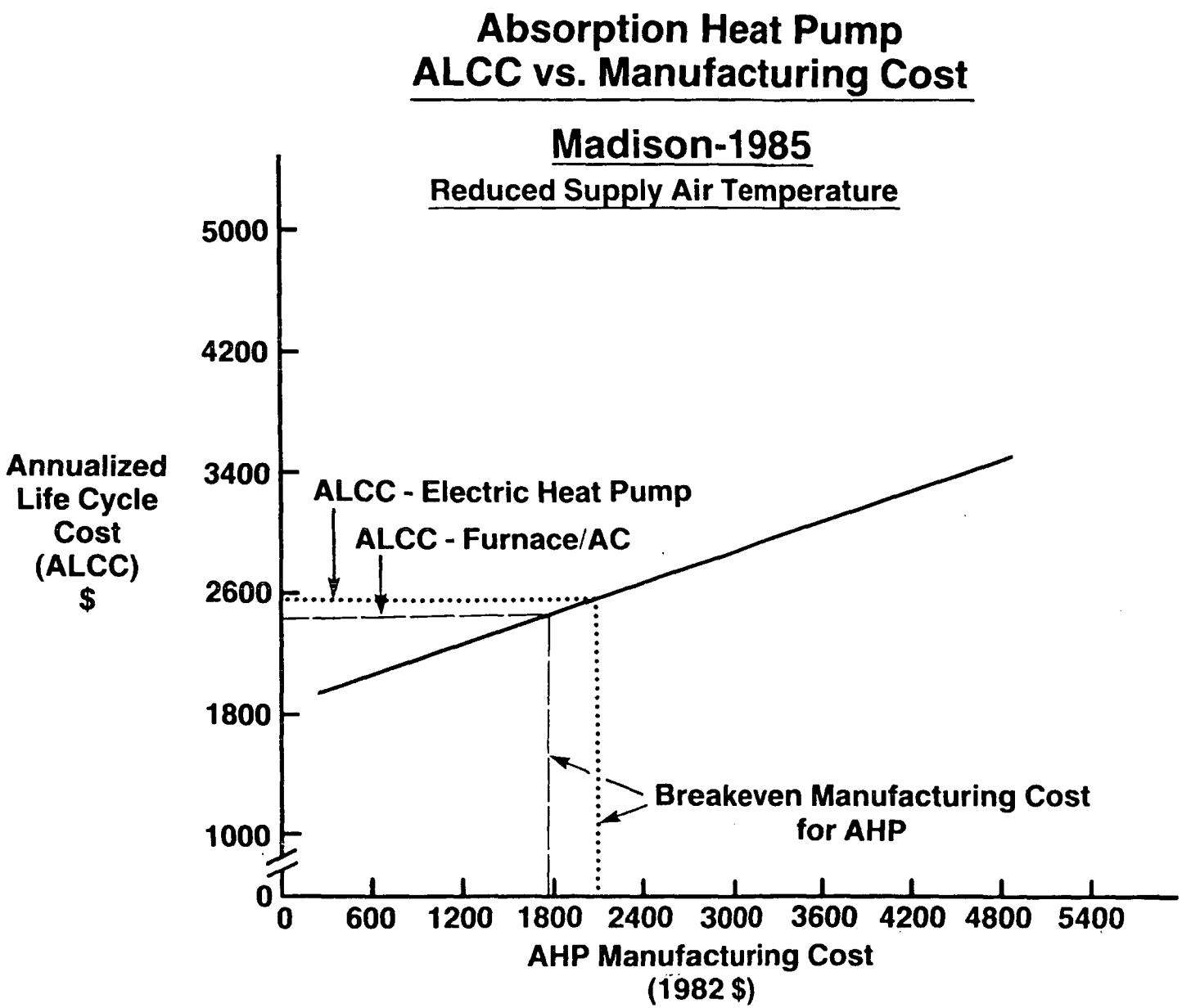
Absorption Heat Pump
ALCC vs. Manufacturing Cost
Madison-1985
Reduced Supply Air Temperature
Annualized Life Cycle Cost (ALCC) $
5000
4200
3400
2600
1800
1000
0
ALCC - Electric Heat Pump
ALCC - Furnace/AC
Breakeven Manufacturing Cost for AHP
0
600
1200
1800
2400
3000
3600
4200
4800
5400
AHP Manufacturing Cost (1982 $)

Figure 25

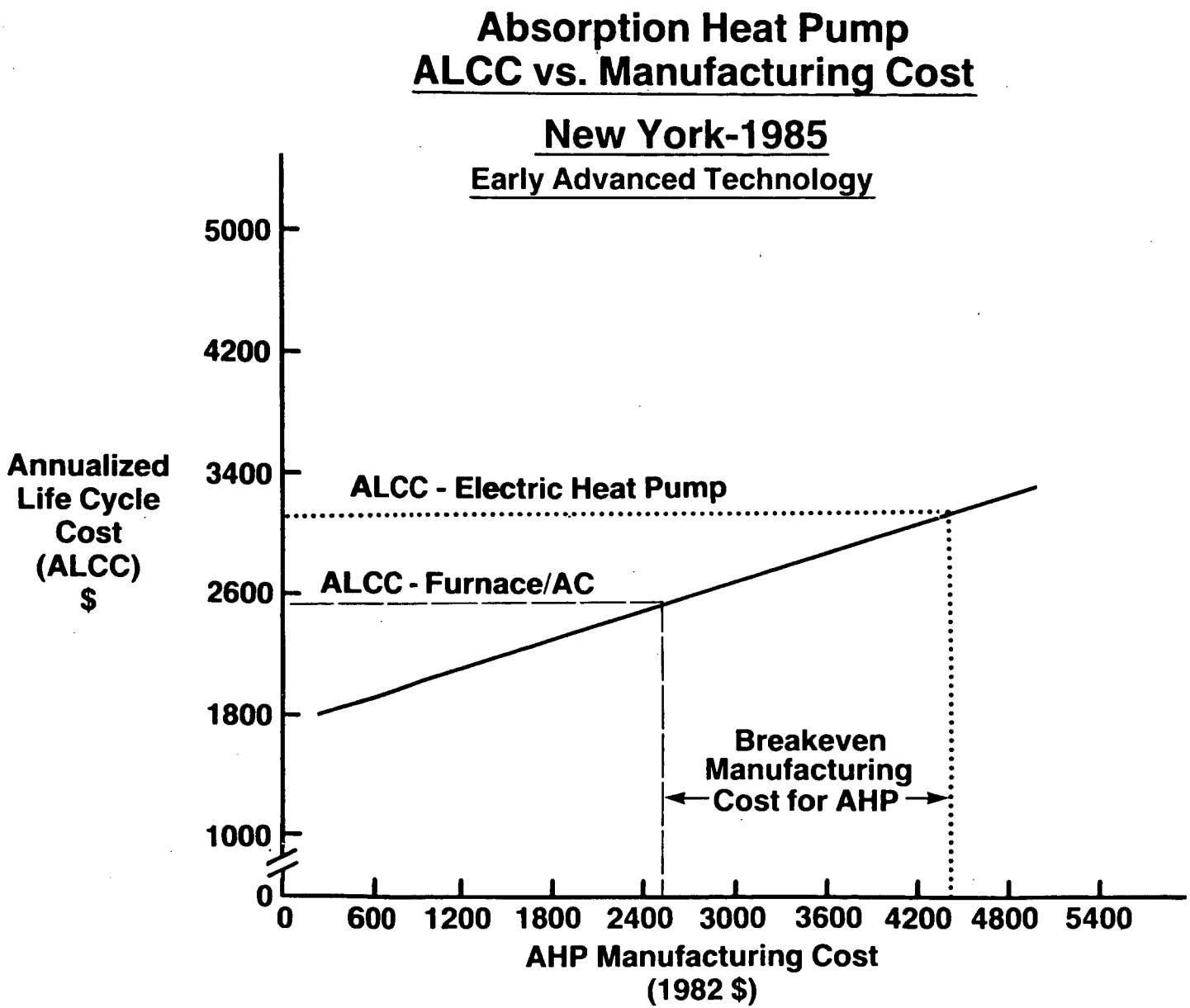
Absorption Heat Pump
ALCC vs. Manufacturing Cost
New York-1985
Early Advanced Technology
Annualized Life Cycle Cost (ALCC) $
5000
4200
3400
2600
1800
1000
0
ALCC - Electric Heat Pump
ALCC - Furnace/AC
Breakeven Manufacturing Cost for AHP
0
600
1200
1800
2400
3000
3600
4200
4800
5400
AHP Manufacturing Cost (1982 $)

Figure 26

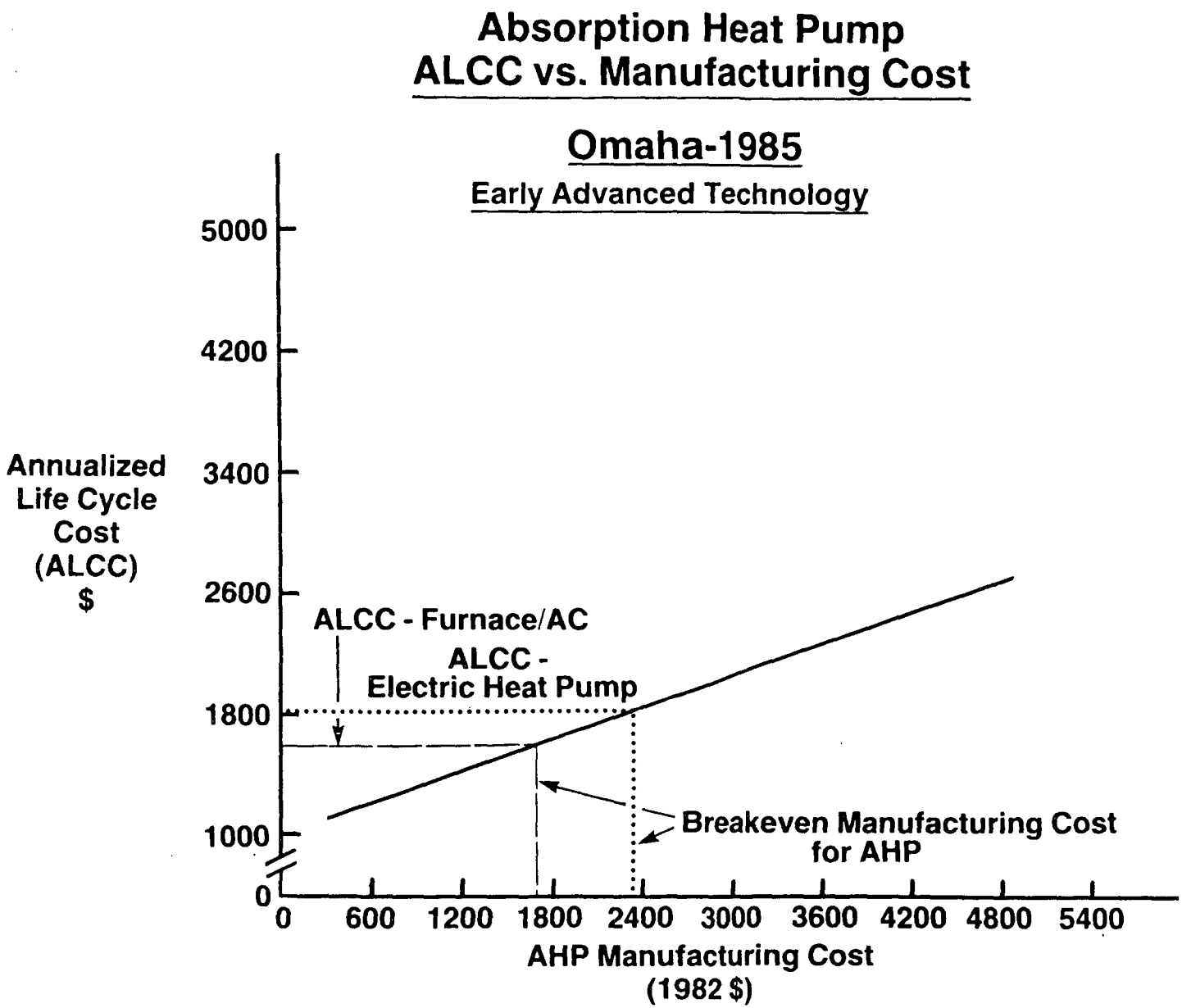
Absorption Heat Pump
ALCC vs. Manufacturing Cost
Omaha-1985
Early Advanced Technology
Annualized Life Cycle Cost (ALCC) $
5000
4200
3400
2600
1800
1000
0
ALCC - Furnace/AC
ALCC - Electric Heat Pump
Breakeven Manufacturing Cost for AHP
0
600
1200
1800
2400
3000
3600
4200
4800
5400
AHP Manufacturing Cost (1982 $)

Figure 27

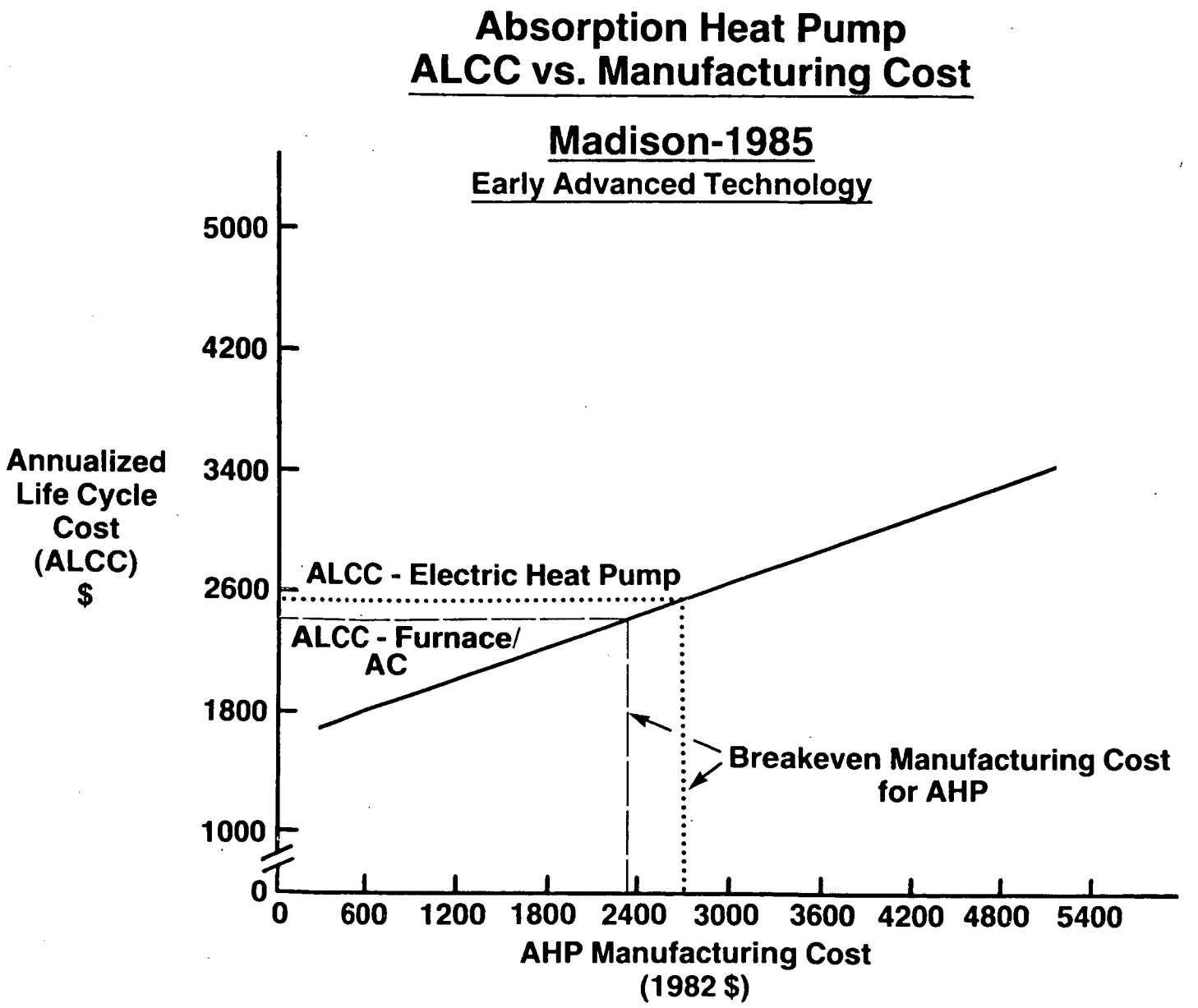
Absorption Heat Pump
ALCC vs. Manufacturing Cost
Madison-1985
Early Advanced Technology
Annualized Life Cycle Cost (ALCC) $
5000
4200
3400
2600
1800
1000
0
ALCC - Electric Heat Pump
ALCC - Furnace/ AC
Breakeven Manufacturing Cost for AHP
0
600
1200
1800
2400
3000
3600
4200
4800
5400
AHP Manufacturing Cost (1982 $)

Figure 28

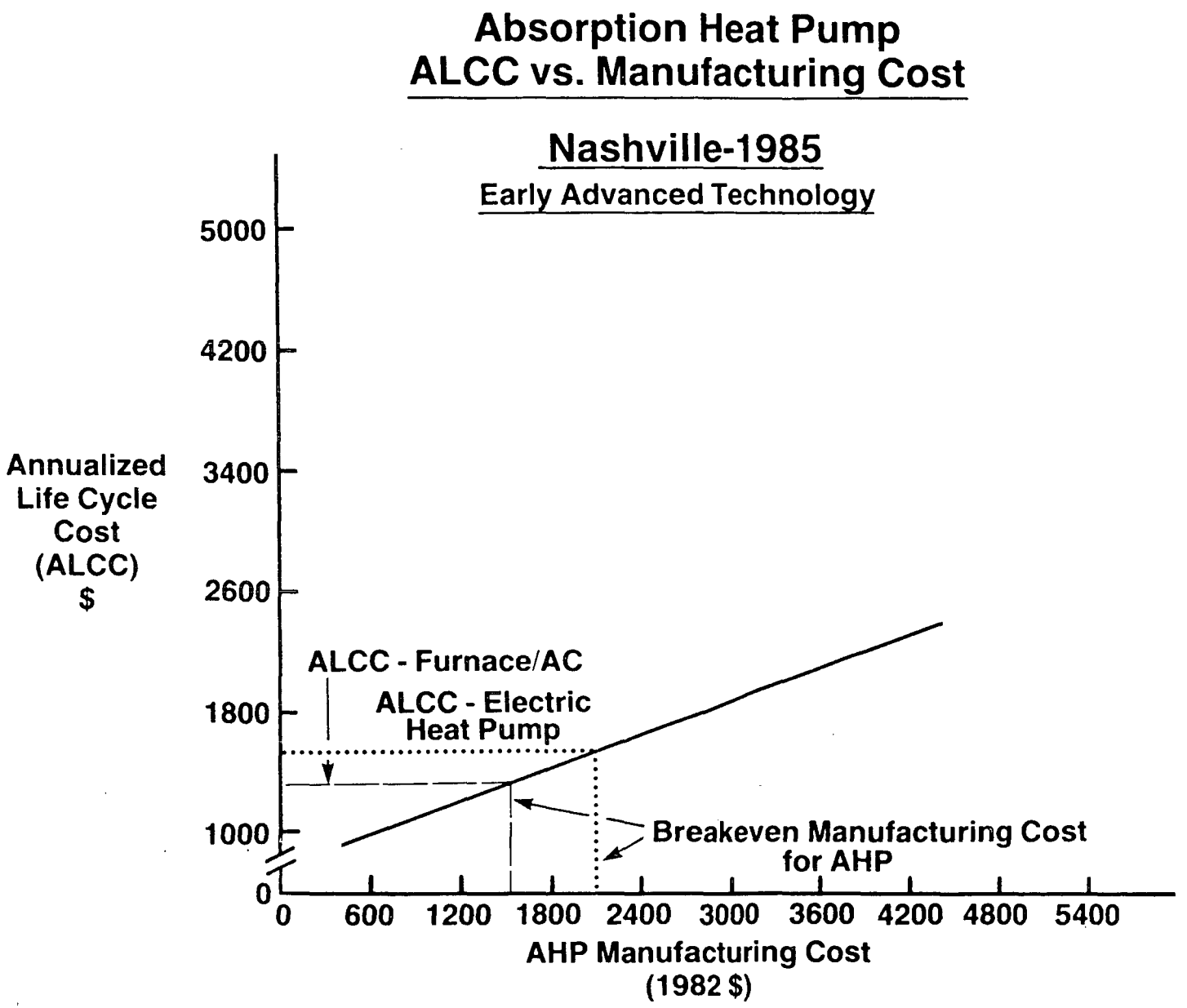
Absorption Heat Pump
ALCC vs. Manufacturing Cost
Nashville-1985
Early Advanced Technology
Annualized Life Cycle Cost (ALCC) $
5000
4200
3400
2600
1800
1000
0
ALCC - Furnace/AC
ALCC - Electric Heat Pump
Breakeven Manufacturing Cost for AHP
0
600
1200
1800
2400
3000
3600
4200
4800
5400
AHP Manufacturing Cost (1982 $)

Figure 29

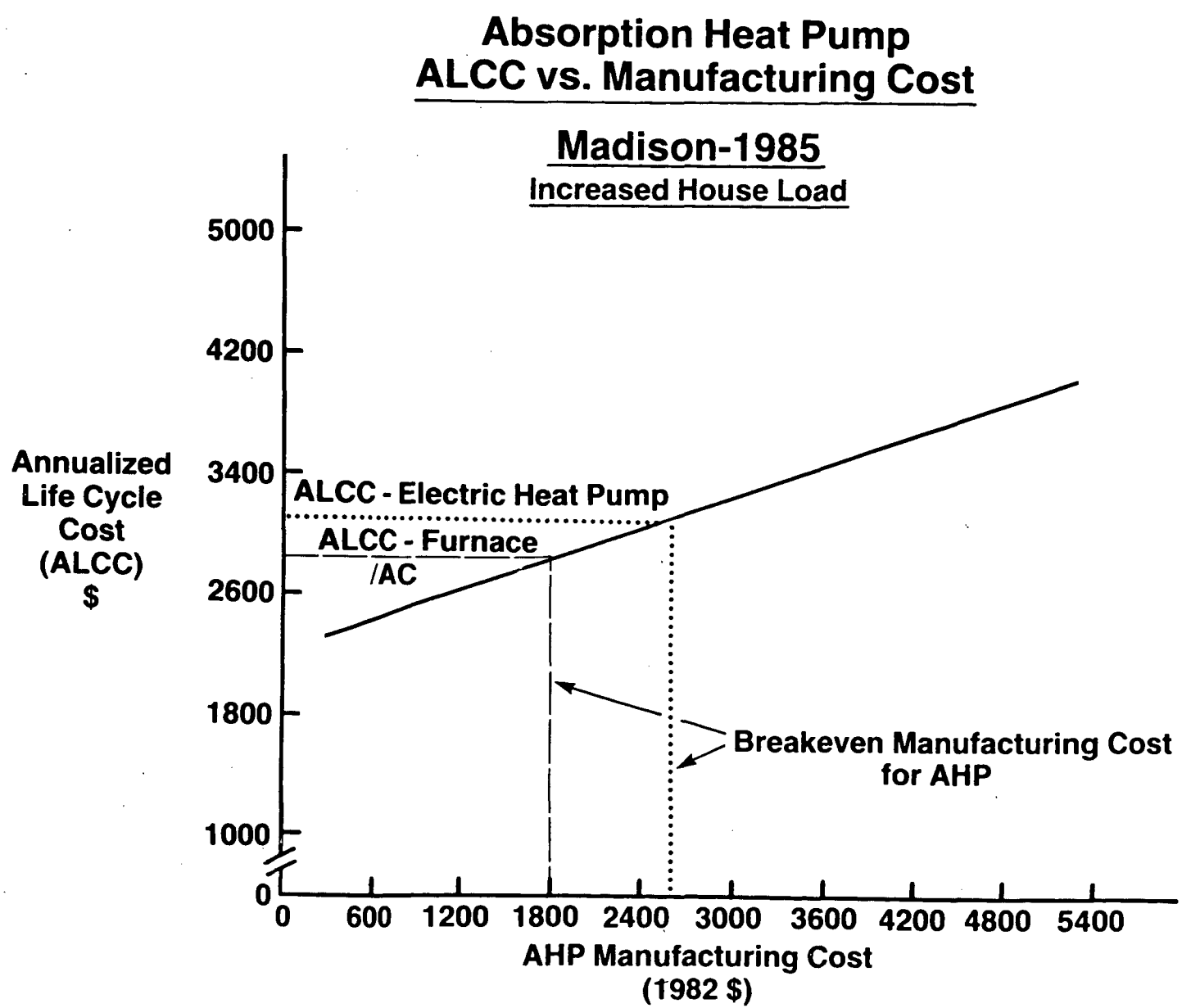
Absorption Heat Pump
ALCC vs. Manufacturing Cost
Madison-1985
Increased House Load
Annualized Life Cycle Cost (ALCC) $
5000
4200
3400
2600
1800
1000
0
ALCC - Electric Heat Pump
ALCC - Furnace /AC
Breakeven Manufacturing Cost for AHP
0
600
1200
1800
2400
3000
3600
4200
4800
5400
AHP Manufacturing Cost (1982 $)

Figure 30

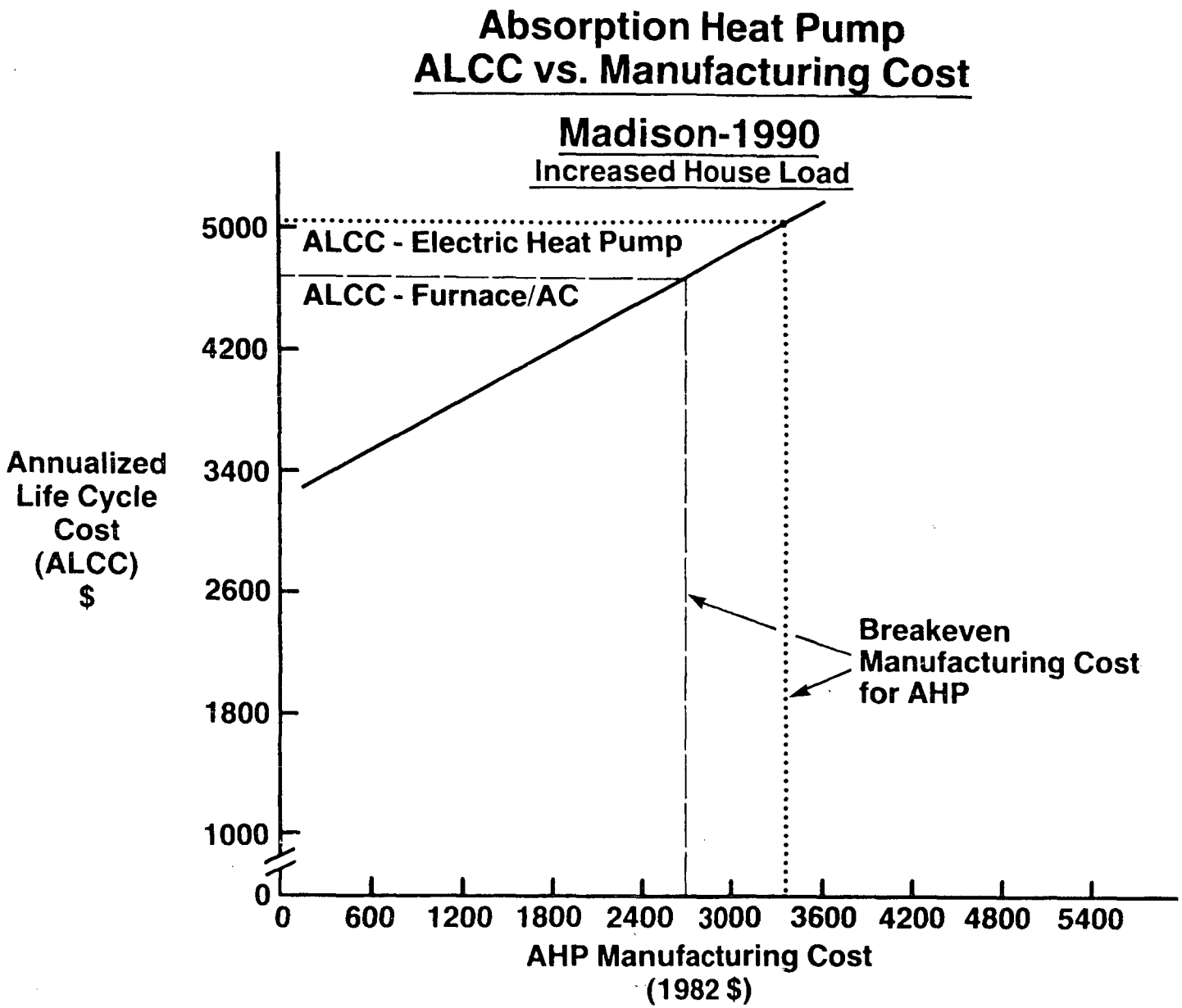
Absorption Heat Pump
ALCC vs. Manufacturing Cost
Madison-1990
Increased House Load
ALCC - Electric Heat Pump
ALCC - Furnace/AC
Annualized Life Cycle Cost (ALCC) $
5000
4200
3400
2600
1800
1000
0
0
600
1200
1800
2400
3000
3600
4200
4800
5400
AHP Manufacturing Cost (1982 $)
Breakeven Manufacturing Cost for AHP

INTERNAL DISTRIBUTION

1. V. D. Baxter
2. R. S. Carlsmith
3. F. C. Chen
4. F. A. Creswick
5. R. C. DeVault
6. P. D. Fairchild
7. S. K. Fischer
8. W. Fulkerson
9. S. M. Gillis, Consultant
10. J. Griess
11. W. R. Huntley
12. F. R. Kalhammer, Consultant
13. S. I. Kaplan
14. R. E. Kasperson, Consultant
15. M. A. Kuliasha
16. M. Lessen, Consultant
17. W. P. Levins
18. F. C. Maienschein, Consultant
19. V. C. Mei
20. J. W. Michel
21. W. A. Miller
22. W. R. Mixon
23. R. W. Murphy
24. E. A. Nephew
25. H. Perez-Blanco
26. G. T. Privon
27. C. K. Rice
28. M. W. Rosenthal
29. E. A. Vineyard
30. K. H. Zimmerman

31-32. Laboratory Records Department
33. Laboratory Records - RC
34. ORNL Patent Office
35-36. Central Research Library
37. Document Reference Section

EXTERNAL DISTRIBUTION

38. J. A. Adams, Research and Engineering Center, Whirlpool Corporation, Monte Road, Benton Habor, MI 49022
39. J. A. Andrews, Brookhaven National Laboratory, Upton, NY 11973
40. David A. Ball, Battelle Columbus Laboratories, 505 King Avenue, Columbus, OH 43201
41. J. Berghmans, Universiteit Leuven, Instituut Mechanica, Celestynen Laan 300A, B-3030 Heverlee, Belgium
42. W. J. Biermann, 45 Foxcroft Drive, Fayetteville, NY 13066
43. James M. Calm, Project Manager, Heat Pump Development, Electric Power Research Institute, 3412 Hillview Avenue, Palo Alto, CA 94303
44. R. N. Chappell, Program Manager, Energy Conservation Branch, Energy and Technology Division, DOE Idaho Operations Office, 550 Second Street, Idaho Falls, ID 83401
45. D. D. Colosimo, Mechanical Technology, Inc., 968 Albany-Shaker Road, Latham, NY 12110
46. P. O. Danig, Technical University of Denmark, Refrigeration Laboratory, DTH 402B, DK-2800 Lyngby, Denmark
47. K. Dao, University of California, Lawrence Berkeley Laboratory, Building 90, Room 2024, 1 Cyclotron Road, Berkeley, CA 94720

48. D. A. Didion, National Bureau of Standards, Thermal Machinery Group, Building Equipment Division, CBT, Gaithersburg, MD 20899
49. M. Falek, Gas Energy Inc., 166 Montague Street, Brooklyn, NY 11201
50. R. J. Fiskum, Energy Conversion Equipment Branch, CE-112, GF-217, Department of Energy, 1000 Independence Avenue S.W., Washington, DC 20585
51. S. Freedman, Gas Research Institute, 8600 W. Bryn Mawr Ave., Chicago, IL 60631
52. M. Fukiwake, AIST/MITI, 1-3-1 Kasmigaseki, Chiyoda-ku, Tokyo, Japan
53. P. V. Gilli, Technische Hochschule in Graz, Inffeldgasse 25, A-8010 Graz, Austria
54. J. A. Gonzales, Office of Research, Development, and Technology Applications, International Energy Agency, 2, rue Andre-Pascal, 75775 Paris Cedex 16, France
55. J. E. Griffith, Research and Technical Laboratory, PSEβG Research Corporation, 200 Boyden Avenue, Maplewood, NY 07040
56. G. Grossman, Technion Institute of Technology, Faculty of Mechanical Engineering, Haifa, Israel
57. W. T. Hanna, Battelle Columbus Laboratories, 505 King Avenue, Columbus, OH 43201
58. J. F. Harris, M.A.C., 11, Boulevard Latour-Maubourg, 75007 Paris, France
59. A. Hayes, Office of Industrial Programs, CE-121, FORSTL, Department of Energy, 1000 Independence Avenue, S.W., Washington, DC 20585
60. F. C. Hayes, Thermal Systems, The Trane Company, 3600 Pammell Creek Road, LaCrosse, WI 54601
61. K. Hickman, York Division, Borg-Warner Corporation, York, PA 17405
62. J. Hill, Building 226, Room B306, National Bureau of Standards, Gaithersburg, MD 20899
63. R. Hise, CNG Research Company, 11001 Cedar Avenue, Cleveland, OH 44106
64. B. C. Hwang, David W. Taylor Naval Ship RβD Center, Annapolis Laboratory, Annapolis, MD 21402
65. H. S. Izawa, Northern Natural Gas Co., 2223 Dodge St., Omaha, NE 68102
66. T. Kapus, Department of Energy, 1000 Independence Ave., Washington, DC 20585
67. S. A. Klein, University of Wisconsin, Mechanical Engineering Dept., Madison, WI 53706
68. W. E. Krauss, Gas Research Institute, 8600 W. Bryn Mawr Ave., Chicago, IL 60631
69. P. Kuppers, KFA/PLE, Postfach 1913, D-5170 Julich 1, Federal Republic of Germany
70. B. Lundquist, Swedish Council for Building Research, St. Goransgatan 66, S-11233 Stockholm, Sweden
71. R. A. Macriss, Institute of Gas Technology, 3424 South State Street, Chicago, IL 60616

72. A. R. Maret, Gas Research Institute, 8600 W. Bryn Mawr Ave., Chicago, IL 60631
73. J. C. Mayor, Swiss Federal Institute for Reactor Research, CE-5303 Wurenlingen, Switzerland
74. K. C. Mead, Management Analysis Center, 124 Mt. Auburn St., Cambridge, MA 02138
75. M. S. Menzer, American Gas Association, 1515 Wilson Blvd., Arlington, VA 22209
76. K. P. Murphy, Allied Corporation, Morristown, NY 07960
77. L. A. McNeely, 7310 Steinmeier Drive, Indianapolis, IN 46250
78. J. P. Millhone, Director, Office of Building Energy Research and Development, Department of Energy, 1000 Independence Ave., S.W., Washington, DC 20585
79. K. P. Murphy, Allied Corporation, Morristown, NY 07960
80. H. E. Nimke, The Brooklyn Union Gas Co., 195 Montague St., Brooklyn, NY 11201
81. B. A. Phillips, Phillips Engineering Company, 721 Pleasant Street, St. Joseph, MI 49085
82. T. Potter, SERI, 1617 Cole Blvd., Golden, CO 80401
83. R. Radermacher, University of Maryland, Mechanical Engineering Dept., College Park, MD 20742
84. V. Recchi, National Research Council-PFE 2, c/o O.T.B., P.O. Box 330, I-70100 Bari, Italy
85. R. C. Reimann, Carrier Corporation, 6304 Carrier Parkway, P.O. Box 4800, Syracuse, NY 13221
86. H. A. Rhea, Lennox Industries, 1600 Metro Dr., Carrollton, TX 75006
87. J. D. Ryan, Energy Conversion Equipment Branch, CE-113.2, Department of Energy, 1000 Independence Avenue S.W., Washington, DC 20585
88. J. Saunders, Brookhaven National Laboratory, Upton, NY 11973
89. W. F. Stoecker, University of Illinois, Department of Mechanical Engineering, Urbana, IL 61801
90. P. L. Vanio, Energy Department, Ministry of Trade and Industry, Pohjoinen Makasiininkatu 6, 00130 Helsinki 13, Finland
91. H. van der Ree, TNO-MT, Laan van Westenenk 501, NL-7334 DT Apeldoorn, Netherlands
92. G. C. Vliet, Taylor Hall 116, The University of Texas, Austin, TX 78712
93. M. Wahlig, Lawrence Berkeley Laboratory, University of California, Berkeley, CA 94720
94. J. R. Wright, National Research Council, Division of Building Research, Building R105, Montreal Road, Ottawa K1A OR6, Ontario, Canada
95. Office of the Assistant Manager for Energy RβD, U.S. Department of Energy, Oak Ridge Operations, Oak Ridge, TN 37831

96-122. Technical Information Center, Department of Energy, P.O. Box 62, Oak Ridge, TN 37831