Development of a residential gas absorption heat pump

K. P. Murphy and B. A. Phillips

Key words: heat pump, residential use, refrigerant R 123a/ETFE absorbent

Mise au point d'une pompe à chaleur à absorption de gaz pour locaux résidentiels

On a mis au point un système de pompe à chaleur à absorption pour locaux résidentiels utilisant un nouveau couple. Le R 123a ($CClF_2CHClF$) est utilisé comme frigorigène et l'ETFE (éthyltétrahydrofurfylether) comme absorbant. Les caractéristiques des fluides sont indiquées Tableau 2 et les performances calculées pour des températures de l'évaporateur de 2 et −18°C et une température du condenseur de 49°C donnent des coefficients de performance de 1,66 et 1,39. Les résultats expérimentaux préliminaires utilisant un appareil simple ont donné des COP de 1,3 à 1,55. On considère que l'utilisation d'un cycle optimisé employant le nouveau couple, combiné à un rendement élevé du régénérateur chauffé au gaz donnera une pompe à chaleur à absorption économique pour de nombreuses applications domestiques.

A residential absorption heat pump system has been developed based on a new absorption pair. It uses R 123a ($CClF_2CHClF$) as the refrigerant and ETFE (ethyltetrahydrofurfylether) as the absorbent. The thermodynamic analysis of the new pair shows the potential of very good performance for heat pump duties.

Actual tests show that heating coefficients of performance (*COP*) in the range of 1.50 are possible, so the system is very competitive with other heating and cooling technologies especially in more northerly climates.

The HVAC industry has made drmatic improvement in equipment efficiency over the past decade in response to rapidly increasing energy costs. Many combustion-type heating systems are now approaching 100% of their theoretical efficiency. To go beyond this barrier requires new technology. One direction being explored is thermal heat pumps. With these systems, the combustion efficiency barrier can be overcome and substantial improvements in efficiency made.

A residential sized absorption heat pump based on a new absorption pair is being developed. This system has the potential to substantialy reduce the annual gas consumption of a home, especially in climates with large heating loads. The development has been underway since 1974, and is now in the prototype testing stage.

The concept

As with any cooling cycle, an absorption unit can be made to perform as a heat pump system. The basic configuration used in this system is shown in Fig. 1. Gl9col solution is used as a secondary coolant, which exchanges heat with the evaporator, condenser, absorber, and generator. This configuration was chosen over alternate designs because it simplifies the changing from heating mode to cooling mode since the function of each component remains the same. To change the mode of operation from heating to cooling, the mode selection valve sends the heated water to the outdoor coil for heat rejection and the chilled water to the indoor coil.

Absorption pairs

The development of an improved absorption pair has been a challenge for the chemical and HVAC industries

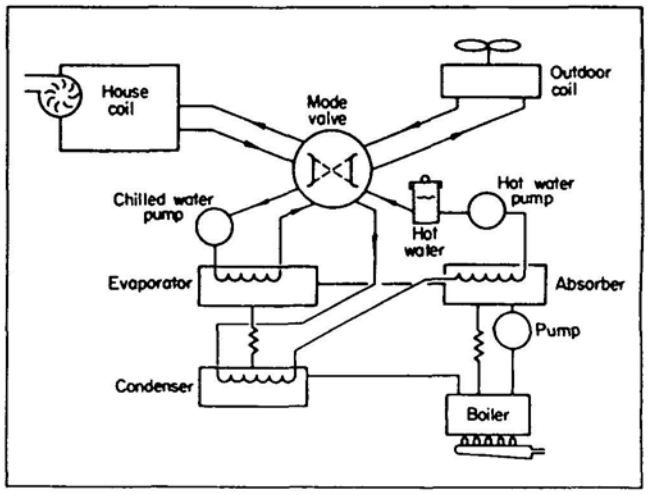

Fig. 1 Absorption heat pump circuit

Fig. 1 Circuit de la pompe à chaleur à absorption

KPM is Manager, New Business Development, Allied Chemical Co., Allied Corporation, Morristown, NJ, USA. BAP is President, Phillips Engineering, St. Joseph, MI, USA. This is an edited version of a paper presented to the ASHRAE semi-annual Conference in Atlantic City, January 1983, and is reprinted with permission of the American Society of Heating, Refrigerating and Air Conditioning Engineers, Inc. Paper published in ASHRAE Transactions **89** 1b (June 1983).

since the invention of the absorption cooling process. The literature is filled with many potential combinations. Unfortunately, when examined in detail, almost all of these have some seripus drawback which would make them unsuitable for practical use. Table 1 gives some of the important criteria for a new pair to be commercially attractive.

The programme earlier evaluated several new pairs and took the hardware development to prototype stage. These prototypes met the target specifications before it was found necessary to reject the pair, mainly due to excessive toxicity of the fluids. The new absorption pair used in this heat pump, is R 123a ($CF_2ClCHClF$) as the refrigerant and ethyltetrahydrofurfurylether (ETFE) as the absorbent. Table 2 shows some of the basic properties of the pair. Extensive thermodynamics and physical properties were developed for the new pair. Fig. 2 shows the pressure-temperature-composition relationship for the fluids.

A comparison of the ideal factors in Table 1 to the properties of this pair shows that while not ideal in every respect, the new pair possesses an attractive overall set of properties.

Table 1. Important criteria for absorption pairs
Tableau 1. Critères importants pour les couples à absorption

Refrigerant	Absorber
High latent heat	Low volatility
Operating pressure	Stability
Stability	Compatibility
High solubility	Low viscosity
Compatibility	Low toxicity
Low toxicity	Non flammable
Non flammable	

Table 2. Fluid characteristics
Tableau 2. Caractéristiques des fluides

R 123a	
Name	1,1,2-Trifluoro 1,2-dichloro ethane
Formula	$CF_2ClCHClF$
Boiling point, °F (°C)	84 (29)
Heat of vaporization, Btu/lb.	75
Flammability	None
ETFE	
Name	Ethyltetrahydrofurfuryl ether
Formula	$CH_2OC_2H_5$
Boiling point, °F (°C)	313 (156)
Heat capacity, Btu/lb °F	0.450
Flash point, °F (°C)	116 (47)

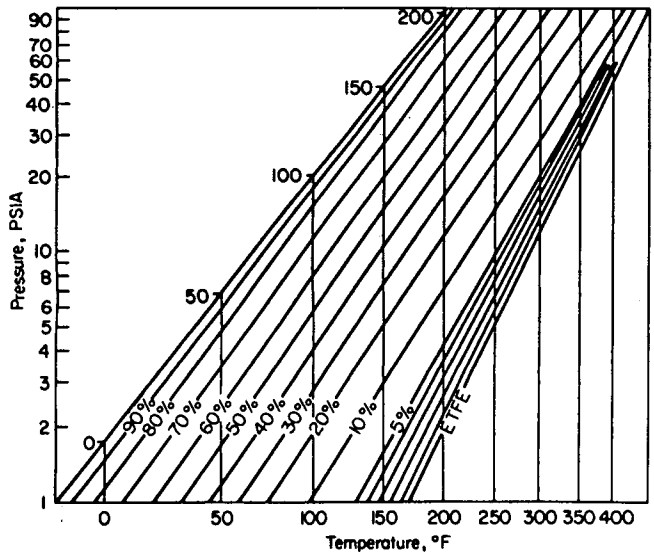

Fig. 2 Solubility of R 123a in ETFE

Fig. 2 Solubilité du R 123a dans ETFE

Theoretical performance of R 123a/ETFE

Based on experimentally determined solubility and thermodynamic data, the calculated cycle performance of R 123a/ETFE is shown in Table 3. Two cycles are shown: one represents heat pumping in mild conditions, 35°F (2.2°C) evaporator, the second represents performance at low ambient air conditions, 0°F (−18°C) evaporator. The high potential performance of this pair, which is shown by Table 3, compares favourably with other known pairs. This performance is obtained at generator temperature levels, 330°F (166°C) and 340°F (171°C) respectively, which are acceptable for these fluids.

Actual system performance

At this time, only early test data and limited hardware development has been possible with R 123a/ETFE. Test results are shown in Fig. 3 with additional details in Table 4. In Fig. 3, the *COP*s are given on a net heat input basis that is equivalent to a combustion system efficiency of 1.0. The combustion system efficiency is

Table 3. Calculated performance of R123a/ETFE
Tableau 3. Performances calculées de R 123a/ETFE

Evaporator temp, °F	36	0
Condenser temp, °F	120	120
Absorber out temp, °F	105	110
Generator peak temp, °F	330	340
Heat input, Btu/h	54 000	54 000
Refrigeration effect, Btu/h	35 700	25 100
Heat output, Btu/h	89 700	75 100
COP heating (thermodynamic)	1.66	1.39

Table 4. R 123a/ETFE test results
Tableau 4. Résultats des essais avec R 123a/ETFE

Evaporator temperature, °F	40	20.8
Evaporator pressure, PSIA	5.2	3.1
Condenser temperature, °F	122.5	120.5
Condenser pressure, PSIA	30.0	29.0
Refrigerant flow, lbs/h	433	354
Weak liquid flow, lbs/h	925	1029
Heat input, Btu/h	60 550	59 850
Heat output, Btu/h	76 700	70 150
COP (gas)	1.27	1.17
COP (thermodynamil)	1.56	1.46

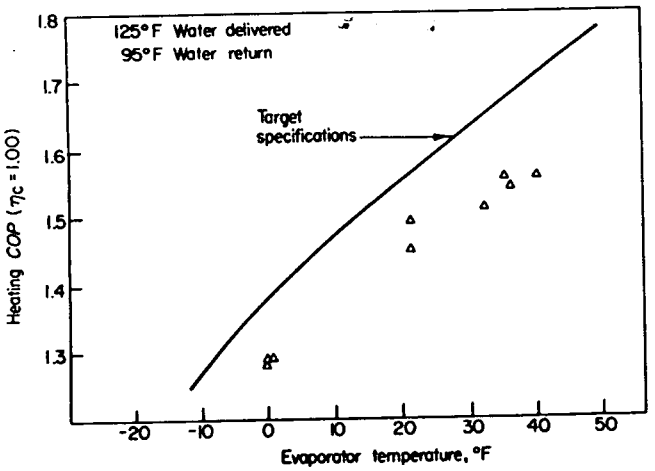

Fig. 3 R 123a/ETFE performance

Fig. 3 Performance de R 123a/ETFE

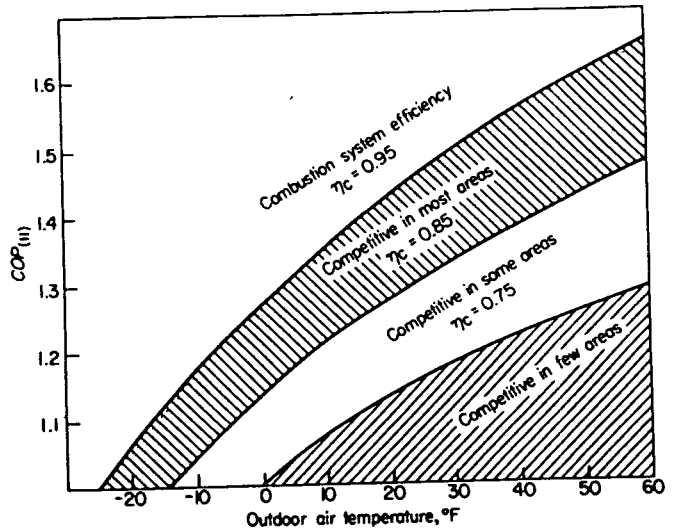

Fig. 4 *COP* at various combustion system efficiences

Fig. 4 COP pour divers rendements du système de combustion

defined as:

$$\eta_c = \frac{\text{net heat delivered to system}}{\text{higher heating value of the fuel}} \qquad (1)$$

In Table 4, the *COP* is given on both the thermodynamic basis and on the actual net heat basis. The target performance line represents the expected performance of the R 123a/ETFE pair when the system is fully developed. Since these targets were met by previously examined pairs, there is little doubt that they can be achieved by the R 123a/ETFE pair.

One important result of this development programme has been that even with relatively similar organic pairs (not to mention NH_3/H_2O and $H_2O/LiBr$) significantly different component designs were required for optimum performance.

Competitive performance

Evaluation of the performance of an absorption heat pump versus other heating-cooling systems has been made for several scenarios. Several factors strongly influenced the competitive results. These were: relative future cost of gas and electric energy; relative amounts of heating and cooling loads; and total amount of heating and cooling loads.

Only the last two factors can be fixed with any certainty as we conside the future.

Fig. 4 shows the trend of these results. At $\eta_c = 0.7$ the system is generally competitive in only a few areas. At $\eta_c = 0.75$ to 0.85 the system is competitive in some regions of the United States. At $\beta_c = 0.85$ and greater, the system is highly competitive with other advanced heating and cooling systems. At present, the prototype systems are to improve this value to $\eta_c = 0.90$ are now in progress. Based on this level of η_c, the systems heating and cooling are shown in Table 5. The heating mode is at +47°F (7.8°C) outside air performance and the cooling mode is at +95°F (35°C) outside air.

Table 5. Performance specifications
Tableau 5. Spécifications des performances

Heating mode	
Heat input, Btu/h	60 000
Heat output, Btu/h	90 000
Water delivery temperature to house, °F	130
Water return temperature, °F	95
Electrical power, kW	0.75
COP	1.50
Cooling mode	
Cooling capacity	36 000
Chilled water out, °F	45
Chilled water return, °F	55
COP	0.65

Conclusions

A residential sized absorption heat pump based on a new absorption pair has demonstrated its technical feasibility. At current performance levels, the system is competitive with other advanced heating cooling systems in some areas of the United States. Further improvements in the combustion system efficiencies will improve the performance levels so the system will be very competitive in most geographic areas.