REPORT

FINAL REPORT

Absorber Development for a GAX Heat Pump

To

DOE/Oak Ridge National Laboratory

March 10, 1995

Battelle

. . . Putting Technology To Work

FINAL REPORT

on

ABSORBER DEVELOPMENT FOR A GAX HEAT PUMP

to

U.S. DOE/OAK RIDGE NATIONAL LABORATORY

Contract No. 86X-SL266C

March 10, 1995

BATTELLE
505 King Avenue
Columbus, Ohio 43201-2693

Summary

This report summarizes the results and efforts on this project, the "Development of an Absorber for a Gas-Fired Generator/Absorber Heat Exchange Cycle Heat Pump." The two key components of the Generator Absorber Heat Exchanger (GAX) heat pump, the generator and the absorber, were the subjects of two parallel, mutually supporting development projects. Each project focused on the development of one of these key components.

The objectives of this absorber development project were

1. Define a good basic GAX cycle as the basis for development and testing of key cycle components, especially the absorber (Task 1).

2. Design and build the absorber for this cycle (Subtasks 2.1 and 2.3).

3. Design and build an absorber test loop for testing GAX cycle absorbers, whether designed on this project or on other projects (Subtasks 2.2 and 2.4).

4. Conduct testing and further development of the selected absorber (Subtask 2.5).

The approach for this project was to focus on the development of critical cycle components to an acceptable level so that they can later be assembled into a system, tested, and optimized for cost, weight, and reliability.

The specific scope for this project was the development of an absorber for a gas-fired GAX cycle heat pump. The successful development of an absorber for a GAX cycle heat pump will be a significant step toward the development of such a heat pump, even though other key component developments are also needed. Specifically, the burner/generator, pumps, controls, and materials/inhibitor developments are needed before breadboard system testing can be conducted. The development of these other key components is the scope of the parallel Gas Research Institute (GRI) project.

Task 1. GAX Configuration Optimization

The objective of this task was to evaluate several options for the design of the GAX cycle and their impact on the absorber design.

This analytical evaluation was done using computer-assisted analyses of the cycle conditions and absorber performance. The results of this analysis were

- Process flow sheets for four key operating conditions
- Required component sizes, in terms of LMTD and UA, for the absorber, condenser and outdoor coil.
- Heat balances and COP projections at each of the operating conditions.
- Estimates of parasitic power requirements, given reasonable assumptions for motor and pump/fan efficiency.

This task focused on defining the thermodynamic requirements for a GAX cycle operating in both air conditioning and heat pumping modes needed as the basis for the detailed design of the absorber. Since the absorber in the selected GAX cycle includes the generator absorber heat exchanger, this task included consideration of the generator requirements also. Requirements and preliminary designs for the condenser and evaporator/ precooler were also considered briefly in this task so that the impact of their potential design on the absorber and on system power consumption could be assessed.

Task 1 Results

The final choice of cycles and components for the GAX heat pump resulted in the following configuration.

Cycles	GAX cycle above a 20°F ambient and a Liquid Heat Exchanger (LHE) cycle below that temperature.
GAX Coupling	Direct coupling of the absorber and generator in the GAX component. No indirect heat transfer means are used.
Heat Output Absorber	The heat output absorber is a hydronically cooled component. This approach allows the use of a single component in both the heat pumping and air conditioning modes of operation.
Indoor Air Coil	The indoor air coil is hydronically coupled to the outdoor unit of the heat pump. Other approaches would require the development of more complex or higher-tech components to transfer the required heat and keep ammonia out of the conditioned space.
Outdoor Air Coil	The outdoor air coil is divided into two sections. One section is the refrigerant-to-air coil and is used in all modes of operation.

The second section is a hydronic-to-air coil that cools the absorber and rectifier in the air conditioning mode. This approach avoids the need for significant parasitic power for hydronic pumping and fan power in the heat pumping mode. It does not, however, require the use of new types of special heat exchangers as would a direct refrigerant-to-air indoor coil.

Rectification — A two-stage, hydronically cooled rectifier is used. A smaller stage is used for heat pumping above a 14°F ambient temperature. A larger stage is used for air conditioning operation and for heat pumping between 0°F and 14°F. Both stages are used for heat pumping in sub-zero ambients.

Cold Ambient Heating — The basic designs of components include the ability to overfire the burner by 50 percent to obtain a greater heat output in subzero ambients. This feature allows the heat pump to more adequately meet a building load without needing a supplemental heating system.

The rationale for choosing these particular cycle features is discussed in the report.

Task 2. Absorber Development

The objective of this task was to conduct the actual development of the complete absorber for a GAX cycle. This task included five subtasks on component final design, test loop design, component fabrication, test loop setup, and component testing and improvement. The goal was to develop an effective absorber that could be used later in a complete system prototype.

The results of Task 1 were the basis for the efforts in this subtask. Three types of heat output absorbers were considered: air-cooled, in-tube absorbers; hydronically cooled, in-tube absorbers; and hydronically cooled, falling-film absorbers. The design of each of these types of absorbers along with the design of absorbers for solution preheating (the absorber heat exchanger or AHE) and for vapor generation, i.e., the generator absorber heat exchanger (GAX) were considered. The goal was to design an absorber that is capable of a close approach to equilibrium, without having a large size or excessive pressure drops on either side.

Subtask 2.1 Component Design

The objective of this subtask was to design an absorber for use in a residential- or light commercial-sized GAX heat pump. The absorber is required to provide both high- and low-temperature heat recovery within the heat pump cycle and heat output from the cycle.

The cycle analyses and optimization conducted in Task 1 of this project showed the need for a three-section absorber consisting of

- A Generator/Absorber Heat Exchanger (GAX) Absorber, to generate refrigerant vapor outside the fired generator
- An Absorber Heat Exchanger (AHE), to recover low-temperature cycle heat and provide it to the solutions being fed to the GAX and the fired generator
- A heat output absorber, to provide one of the required heat outputs from the cycle.

GAX Absorber. The preferred GAX absorber design is based on the design requirements which establish the thermodynamic conditions for this heat exchanger. The total heat transfer rate, LMTD, and UA have been established. From these values a suitable absorber was designed, consisting of a helical coil with a vertical axis in a cylindrical containment vessel. The absorption process takes place in a falling film of solution on the outside of the tube coil and the vapor generation process occurs on the inside of the tube. The generator pressure can easily be contained by the absorber tube, given a reasonable wall thickness. Reasonable sizes for heat exchanger height and coiling diameter for the heat exchanger tubes were also included as design criteria.

AHE Absorber. A falling-film type absorber also was chosen for the AHE. The falling-film AHE absorber design is based on experience with a previous absorber of this type in an ammonia/water cycle and with the ARKLA solution cooled absorber (SCA). The design requirements defined by the GAX cycle models were used to resize these known absorber designs for GAX cycle application. Significantly more information is available on this type of heat exchanger compared to the GAX absorber because of the working experience with the two previously used absorbers. A suitable AHE absorber has been designed that is similar to the GAX absorber, i.e., a vertical coil in a vertical cylinder. This design has the further advantage that it should be possible to combine the GAX and AHE absorbers in a single shell, saving the weight and cost of one pair of dished heads for the containment shell.

HCA Absorber. An in-tube absorber design was chosen for this component, with parallel flow of the solution and vapor in counterflow with the hydronic fluid. The hydronically cooled absorber (HCA) design is based on previous experience with a hydronically cooled absorber for an ammonia/water heat pump and on the absorber design used in an early design for the Bryant absorber. By using a parallel-flow, in-tube absorber, the solution and vapor are mixed at the solution exit from the AHE to transport the mixture to the top of the HCA coil, using a slight pressure drop in the mixture to drive this flow.

The advantage of this absorber design is that it minimizes overall absorber height. The designs of the GAX absorber and the AHE result in a combined height of 4 to 5 feet. Since the HCA is likely to have a height of 2 to 3 feet, the overall unit height would be too great if all three absorber sections were stacked on top of each other.

Subtask 2.2 Test Loop Design

Absorber testing is planned in a test stand having four fluid loops, each with its own pump. One loop contains the regenerator/rectifier and the absorption side of the absorbers. The three other loops each contain a cooler/vapor condenser for the vapor generation/solution heating side of the three absorber sections.

Temperatures, flow rates, and pressures are measured continuously during testing. Well-type and strap-on thermocouples are used where appropriate to measure the inlet and outlet fluid temperatures for each component so that accurate heat balances can be obtained. Ammonia solution flow rates are measured using magnetic flowmeters. Ammonia vapor flow is measured by first condensing the vapor, measuring the liquid flow rate using a coriolis-type flowmeter (to assure accuracy), then re-evaporating the refrigerant before it goes to the absorber. Solution pressure is measured using an MKS pressure transducer. A Fluke Helios data acquisition system is used to record all temperatures, flow rates, and ammonia pressure. Instrumentation was selected and calibrated in accordance with the Quality Assurance plan prepared previously.

Subtask 2.3 Component Fabrication

The components for the absorber were fabricated in Battelle's shop and laboratories. Tubing coils were fabricated to Battelle designs by outside vendors and by Battelle's staff. The material was carbon steel for all the components unless there was a compelling reason for another choice.

The absorber sections were fabricated in separate shells to facilitate modifications and solution sampling. While this approach to absorber fabrication requires a number of joints, each joint can be carefully assembled.

This assembly approach allowed for good flexibility in the assembly of an absorber that includes three different absorber-type functions. There is one absorber shell and coil section each for the GAX, the AHE, and the heat-output absorber. Thus, should it be found during testing that one of the sections is not performing properly, it can be replaced without disturbing or having to rebuild the other sections. This fabrication approach also allowed for close inspection of both ends of each absorber coil at any time during fabrication. Each coil could be checked for good wettability before final assembly.

The completed absorber sections were cleaned, leak checked, and installed in the test loop for testing and evaluation.

Subtask 2.4 Test Loop Setup

The objective of this subtask was to set up the absorber test loop according to the design developed in Subtask 2.2. Parts of a commercial gas-fired chiller are used as the solution heater, so the purchase and modification of such a chiller was a part of this subtask. Another element was purchasing and setting up a small cooling tower to service the cooling needs for the absorber. The fired regenerator puts about 100,000 Btu/hr into the absorber unit and all this heat is ultimately be removed to a coolant. The use of city water in a once-through cooling system would have required a large volume of water, so a small cooling tower appeared to be a good alternative. (Such a unit can be used in winter conditions by circulating the water and not using the fan.) The heat exchangers needed for cooling the solutions and condensing the GAX vapor were fabricated.

The test loop was set up, instrumented, and had its controls installed as part of this subtask. An available data logger and computer were set up for data acquisition from the test loop and for data reduction. These functions were computerized except for solution concentration measurements.

Subtask 2.5 Absorber Testing and Improvement

A total of 20 absorber tests were conducted, ten in the air conditioning (A/C) mode, six in the cold ambient heat pumping mode (CAHP), and four in the warm ambient heat pumping mode (WAHP).

Full use was made of the capabilities of the absorber test stand to adjust the independent variables of each test to the desired values. Particular sets of test conditions were documented as intermediate conditions between two conditions of primary interest. Hence there are a number of test points that do not correspond to a particular design point. A number of changes were made to the absorber test stands during the test campaign, but none of these changes affected the data channel numbers (so these are consistent for all tests) and none of the changes physically affected the test absorbers. Particular changes are discussed throughout the report, as appropriate.

Conclusions

The test results show that the test stands provide the flexibility and capacity required to meet the needs for testing GAX system absorbers. The GAX system components tested in this first test campaign showed specific limitations in performance, but the GAX absorber met its design targets for capacity and temperature rise. The AHE needs improvement and the HCA needs even more improvement to meet their design targets for capacity and temperature rise under all conditions. However, the test results for all three absorbers provide a basis for making these improvements and for designing other absorbers for future GAX heat pumps.

Table of Contents

Page

Summary iii

Abbreviations xv

Introduction 1

Objective 1

Approach 2

Task 1. GAX Configuration Optimization 2

- Objective 2
- Approach 2
- Task 1 Results 4
  - State Point Tables 8
  - COP Predictions 14
  - Key Component Sizing 21
  - Solution and Refrigerant Flow Rates 27
  - Generator Exit Concentration 27
  - Rectifier Performance 27
  - Cycle Selection 37
  - Parasitic Power 44

Task 2. Absorber Development 55

- Objective 55
- Approach 55
- Subtask 2.1 Component Design 55
  - Objective 55
  - Design Requirements 56
  - Absorber Designs 57
  - Conclusions 73

Table of Contents (Continued)

Page

Subtask 2.2 Test Loop Design 73
Approach 73
Absorber/Solution Loop 75
Intermediate Cooling Loops 78
Cooling Tower 79
Instrumentation 79
Test Loop Operation 79
Measurements 84
Data Analysis 85

Subtask 2.3 Component Fabrication 85
Approach 85
Results 86

Subtask 2.4 Test Loop Setup 86
Approach 86

Subtask 2.5 Absorber Testing and Improvement 87
Test Results 88
Conclusions 102

Appendix A. Changes to the Basic Absorption Model A-1

Appendix B. Listing of the Computer Model B-1

Appendix C. Advance Text of ASHRAE Paper C-1

FIGURES

Figure 1. Schematic cycle diagram for a GAX cycle air conditioner 5

Figure 2. Schematic cycle diagram for a GAX cycle heat pump 6

Figure 3. Schematic cycle diagram for a LHE cycle heat pump 7

Figure 4. Overall COP, capacity and building heating load for LHE and GAX heat pumps 15

Figure 5. Overall COP, capacity and building cooling load for a GAX air conditioner 16

Page

Figure 6. Cycle COP for LHE and GAX heat pumps 17

Figure 7. Cycle COP for a GAX air conditioner 18

Figure 8. Solution and refrigerant flow rates for LHE and GAX heat pumps 28

Figure 9. Solution and refrigerant flow rates for a GAX air conditioner 29

Figure 10. Generator solution exit concentration for LHE and GAX heat pumps 30

Figure 11. Generator solution exit concentration for a GAX air conditioner 31

Figure 12. Generator exit vapor concentration for LHE and GAX heat pumps 32

Figure 13. Rectifier exit vapor concentration for LHE and GAX heat pumps 33

Figure 14. Generator exit vapor concentration for a GAX air conditioner 34

Figure 15. Rectifier exit vapor concentration for a GAX air conditioner 35

Figure 16. Cycle schematic diagram for the Generator Absorber Heat Exchanger (GAX) cycle with a hydronically cooled rectifier (GH) 38

Figure 17. Cycle schematic diagram for the absorber heat exchanger (AHE) cycle with a hydronically cooled rectifier (AH) 39

Figure 18. Cycle schematic diagram for the liquid heat exchanger (LHE) cycle with a hydronically cooled rectifier (LH) 40

Figure 19. Dual Cycle ammonia condenser with low pressure drop inlet and outlet 45

Figure 20. Dual Cycle ammonia condenser with original inlet and outlet 47

Figure 21. Pressure drop for original and improved Dual Cycle ammonia condenser as a function of hydronic flow rate 48

Figure 22. Dual Cycle hydronic valve 49

Figure 23. Dual Cycle hydronic valve pressure drop as a function of hydronic flow rate 50

Figures (Continued)

Page

Figure 24. Absorber state points 58

Figure 25. GAX absorber design 63

Figure 26. AHE absorber design 65

Figure 27. HCA absorber design 70

Figure 28. Composite absorber design 72

Figure 29. Absorber test loop schematic 74

Figure 30. Comparison of test results and model predictions 96

Figure 31. Comparison of test results and model predictions 101

TABLES

Table 1. Cycle State Points at a 95°F Ambient for the GAX Air Conditioning Cycle 9

Table 2. Cycle State Points at a 47°F Ambient for the GAX Heat Pumping Cycle 10

Table 3. Cycle State Points at a 17°F Ambient for the LHE Heat Pumping Cycle 11

Table 4. Cycle State Points at a -17°F Ambient for the LHE Heat-Pumping Cycle with 150 Percent Burner Overfiring 12

Table 5. Component Heat Duty (Btu/min) at Four Key Ambient Temperatures 14

Table 6. Component Sizes 19

Table 7. Standard Cycle Conditions 20

Table 8. Key Component UA Values Resulting from Comparative Cycle Analysis 22

Table 9. Cycle COP for Various Key Component Sizes, GAX Cycle with Solution-Cooled Rectification (GS Cycle) 24

Table 10. Cycle COP for Various Key Component Sizes, Liquid Heat Exchanger Cycle with Solution-Cooled Rectification (LS Cycle) 25

Table 11. Cycle COP for Various Values of Rectifier UA at Three Key Temperatures. LHE and GAX Cycles with Hydronically Cooled Rectification 26

Table 12. Estimated Hydronic Pressure Drop for 5RT Unit 52

Table 13. Estimated Hydronic Loop Pumping Power 54

Table 14. Estimated Power Consumption (Outdoor Unit Only) 54

Table 15. Design Requirements by Operating Mode 59

Table 16. GAX Absorber Design Parameters 61

Table 17. AHE Absorber Design Comparison 66

Table 18. Hydronically Cooled Absorber Comparison 69

Table 19. List of Hardware and Instrumentation for the Absorber Test Stand 80

Table 20. Absorber Target Independent Variables 83

Table 21. Summary of Air Conditioning Mode Tests 89

Table 22. Summary of Heat Pumping Mode Tests 90

Table 23. Test Results for the GAX Absorber in Air Conditioning 92

Table 24. Test Results for the AHE in Air Conditioning 93

Table 25. Test Results for the HCA in Air Conditioning 94

Table 26. Test Results for the GAX Absorber in the WAHP Mode 98

Table 27. Test Results for the AHE in the WAHP Mode 99

Table 28. Test Results for the HCA in the WAHP Mode 100

Tables (Continued)

Page

Table 29. Test Results for the GAX Absorber in the CAHP Mode 103

Table 30. Test Results for the AHE in the CAHP Mode 104

Table 31. Test Results for the HCA in the CAHP Mode 105

Abbreviations

A/C	Air conditioning
AHE	Absorber heat exchanger
Btu	British thermal unit
CAHP	Cold ambient heat pumping
COP	Coefficient of Performance
DOE	U.S. Department of Energy
°F	Degrees Fahrenheit
GAX	Generator absorber heat exchanger
GAXA	GAX absorber
GHE	Generator heat exchanger
GS	GAX cycle with solution-cooled rectifier
HCA	Hydronically cooled absorber
LHE	Liquid heat exchanger
LMTD	Log mean temperature difference
ORNL	Oak Ridge National Laboratory
SCA	Solution-cooled absorber
T/C	Thermocouple
U	Overall heat transfer coefficient
UA	Overall heat transfer coefficient times heat exchange area
WAHP	Warm ambient heat pumping

FINAL REPORT

ABSORBER DEVELOPMENT FOR A GAX HEAT PUMP

March 10, 1995

Introduction

This report summarizes the results and efforts on this project, the "Development of an Absorber for a Gas-Fired Generator/Absorber Heat Exchange Cycle Heat Pump." The two key components of the Generator Absorber Heat Exchanger (GAX) heat pump, the generator and the absorber, were the subjects of two parallel, mutually supporting development projects. Each project focused on the development of one of these key components.

Objective

The objectives of this absorber development project were

1. Define a good basic GAX cycle as the basis for development and testing of key cycle components, especially the absorber.

2. Design and build the absorber for this cycle.

3. Design and build an absorber test loop for testing GAX cycle absorbers, whether designed on this project or on other projects.

4. Conduct testing and further development of the selected absorber.

Approach

The approach for this project was to focus on the development of critical cycle components to an acceptable level so that they can later be assembled into a system, tested, and optimized for cost, weight, and reliability.

The specific scope for this project was the development of an absorber for a gas-fired GAX cycle heat pump. The successful development of an absorber for a GAX cycle heat pump will be a significant step toward the development of such a heat pump, even though other key component developments are also needed. Specifically, the burner/generator, pumps, controls, and materials/inhibitor developments are needed before breadboard system testing can be conducted. The development of these other key components is the scope of the parallel Gas Research Institute (GRI) project.

The project results by task are presented and discussed in the following sections of this report.

Task 1. GAX Configuration Optimization

Objective

The objective of this task was to evaluate several options for the design of the GAX cycle and their impact on the absorber design.

Approach

This analytical evaluation was done using computer-assisted analyses of the cycle conditions and absorber performance. The results of this analysis were

- Process flow sheets for four key operating conditions.

- Required component sizes, in terms of LMTD and UA, for the absorber, condenser and outdoor coil.
- Heat balances and COP projections at each of the operating conditions.
- Estimates of parasitic power requirements, given reasonable assumptions for motor and pump/fan efficiency.

This task focused on defining the thermodynamic requirements for a GAX cycle operating in both air conditioning and heat pumping modes needed as the basis for the detailed design of the absorber. Since the absorber in the selected GAX cycle includes the generator absorber heat exchanger, this task included consideration of the generator requirements also. Requirements and preliminary designs for the condenser and evaporator/ precooler were also considered briefly in this task so that the impact of their potential design on the absorber and on system power consumption could be assessed.

The analyses included the use of hand calculations and computer model predictions for GAX performance. Thermodynamic designs, heat and mass transfer considerations, and hydrodynamic considerations were evaluated to arrive at designs that are well suited to a practical GAX heat pump. The cycle we analyzed is the basic GAX cycle as used by both Trane and Phillips Engineering in their projects for DOE/ORNL.

The task scope included evaluating both direct and indirect means of providing the heat transfer between the generator and absorber in the GAX cycle. The indirect means included pumped loops and thermosyphon approaches. The possibilities of using both outdoor and indoor air to directly heat or cool solution or refrigerant in cycle components were also considered.

The deliverable for Task 1 was a task report, documenting the task efforts and results. For completeness, the task results are also presented in this final project report. The task results are

- Process flow sheets and state point tables for four key operating conditions.
- The required component sizes for all major components in the heat pump, in terms of the required UA for each.
- Heat Balances and COP projections at the four key operating conditions.
- A discussion of the rationale for making specific configuration choices.
- Estimates of parasitic power requirements.
- A discussion of the changes made to the basic Grossman absorption model during this task, which is presented in Appendix A.

Task 1 Results

The final choice of cycles and components for the GAX heat pump resulted in the following configuration. Figures 1, 2, and 3 show the process flow sheets (schematic diagrams) for the cycles chosen.

Cycles	GAX cycle above a 20°F ambient and a Liquid Heat Exchanger (LHE) cycle below that temperature.
GAX Coupling	Direct coupling of the absorber and generator in the GAX component. No indirect heat transfer means are used.
Heat Output Absorber	The heat output absorber is a hydronically cooled component. This approach allows the use of a single component in both the heat pumping and air conditioning modes of operation.
Indoor Air Coil	The indoor air coil is hydronically coupled to the outdoor unit of the heat pump. Other approaches would require the

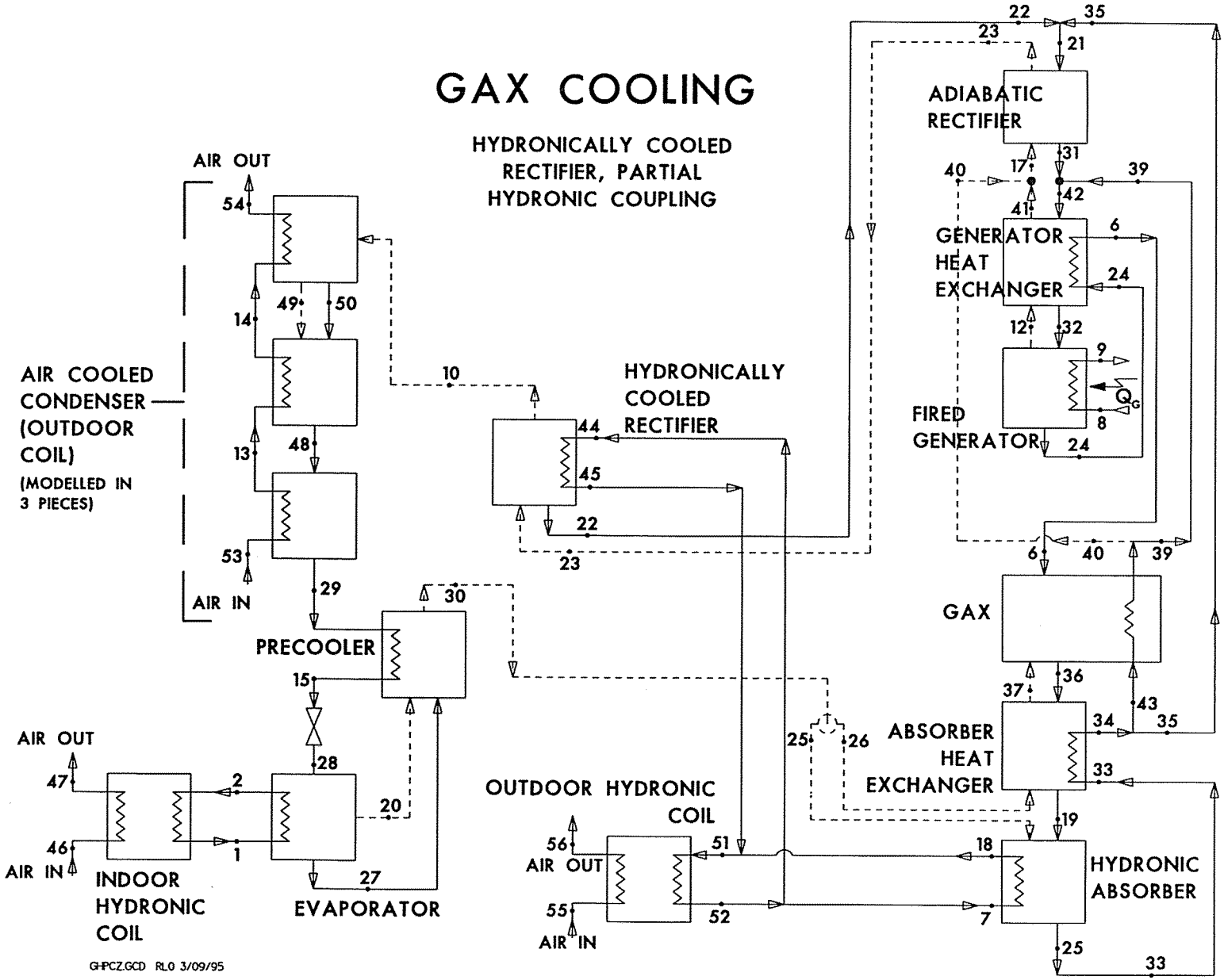

Figure 1. Schematic cycle diagram for a GAX cycle air conditioner

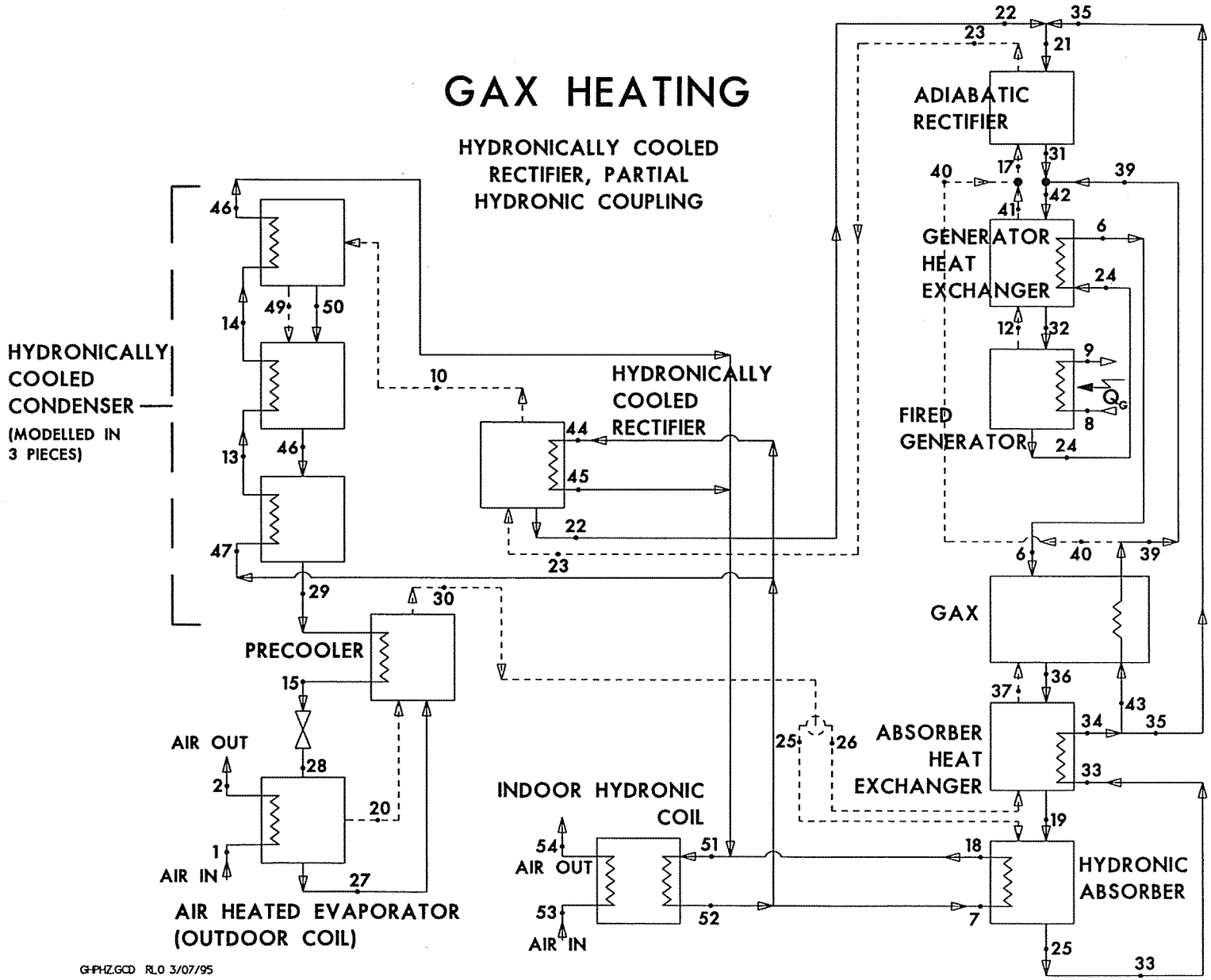

Figure 2. Schematic cycle diagram for a GAX cycle heat pump

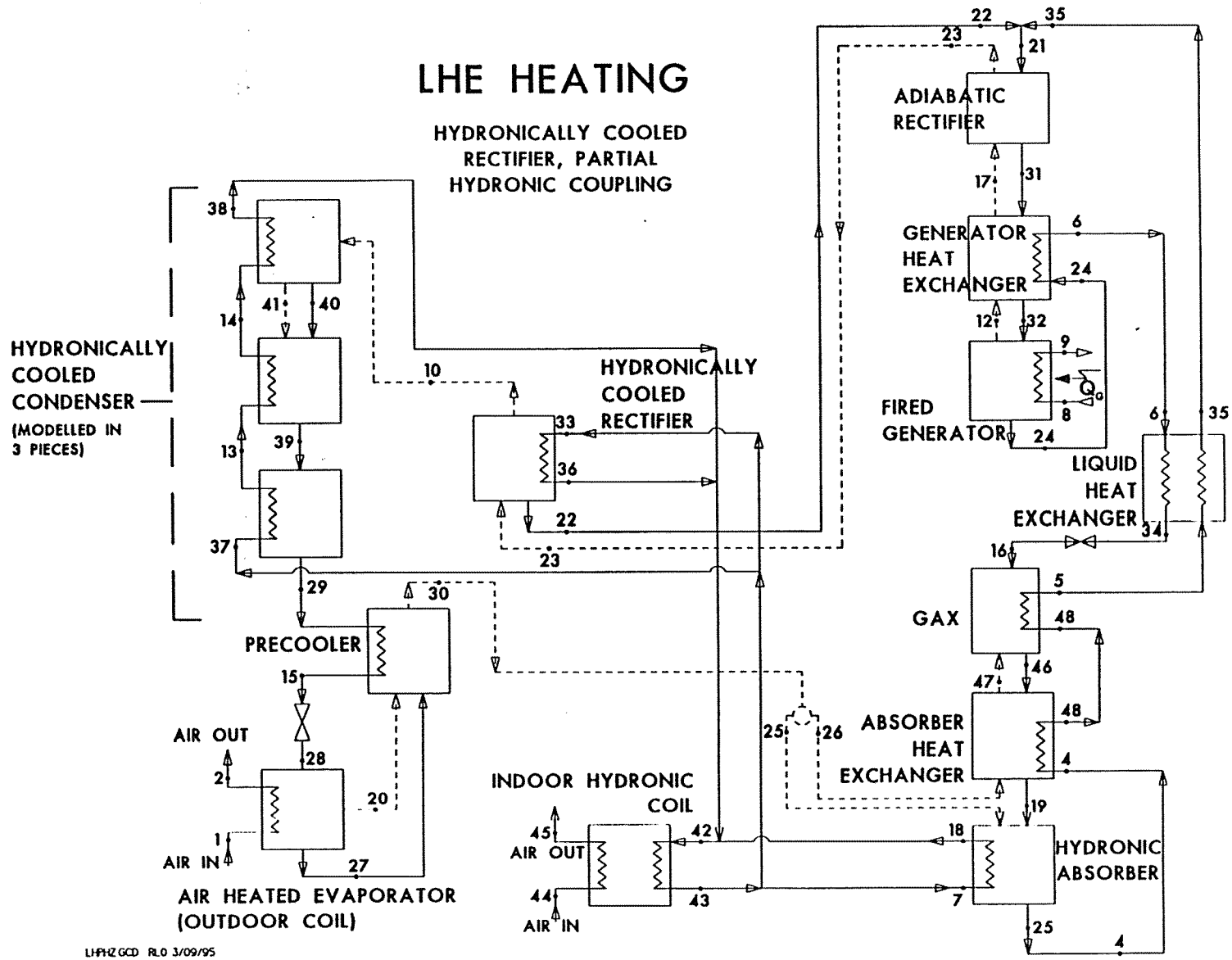

Figure 3. Schematic cycle diagram for a LHE cycle heat pump

development of more complex or higher-tech components to transfer the required heat and keep ammonia out of the conditioned space.

Outdoor Air Coil	The outdoor air coil is divided into two sections. One section is the refrigerant-to-air coil and is used in all modes of operation. The second section is a hydronic-to-air coil that cools the absorber and rectifier in the air conditioning mode. This approach avoids the need for significant parasitic power for hydronic pumping and fan power in the heat pumping mode. It does not, however, require the use of new types of special heat exchangers as would a direct refrigerant-to-air indoor coil.
Rectification	A two-stage, hydronically cooled rectifier is used. A smaller stage is used for heat pumping above a 14°F ambient temperature. A larger stage is used for air conditioning operation and for heat pumping between 0°F and 14°F. Both stages are used for heat pumping in sub-zero ambients.
Cold Ambient Heating	The basic designs of components include the ability to overfire the burner by 50 percent to obtain a greater heat output in subzero ambients. This feature allows the heat pump to more adequately meet a building load without needing a supplemental heating system.

The rationale for choosing these particular cycle features is discussed later in this report.

State Point Tables

The complete state point tables for the chosen cycles are given in Tables 1 to 4 for 95°F, 47°F, 17°F, and -17°F. The state point numbers are keyed to the points in the cycle process flow sheets, Figures 1 to 3. Tables 1 to 4 give the temperature (F), enthalpy (Btu/lbm), flow rate (lbm/min), ammonia concentration (percent), pressure (psia) and vapor fraction for each state point. Table 5 gives the component heat duty for each component at the four key temperatures of 95°F, 47°F, 17°F, and -17°F.

Table 1. Cycle State Points at a 95°F Ambient for the GAX Air Conditioning Cycle

STATE POINT	TEMPER.	ENTHALPY	FLOW RATE	CONCENTR.	PRESSURE	VAPOR FR.
1	5.7958D+01	2.6065D+01	9.9999D+01	0.0000D+00	0.0000D+00	0.0000D+00
2	4.7612D+01	1.5828D+01	9.9999D+01	0.0000D+00	0.0000D+00	0.0000D+00
3	6.6087D+01	-4.7952D+01	0.0000D+00	6.9236D+01	7.5975D+01	0.0000D+00
4	1.9777D+02	1.6583D+02	9.4000D+00	0.0000D+00	0.0000D+00	0.0000D+00
5	2.6634D+02	2.3536D+02	9.4000D+00	0.0000D+00	0.0000D+00	0.0000D+00
6	2.6959D+02	2.2717D+02	2.5318D+00	4.4711D+00	2.5439D+02	0.0000D+00
7	1.0343D+02	7.1231D+01	3.1300D+01	0.0000D+00	0.0000D+00	0.0000D+00
8	2.5000D+03	2.8525D+03	4.1700D-01	0.0000D+00	0.0000D+00	0.0000D+00
9	4.7839D+02	4.5445D+02	4.1700D-01	0.0000D+00	0.0000D+00	0.0000D+00
10	1.3157D+02	5.6776D+02	2.1035D+00	9.9972D+01	2.5439D+02	1.0000D+00
11	1.9199D+02	6.8065D+01	1.0536D+00	4.8950D+01	2.5439D+02	0.0000D+00
12	2.7070D+02	7.2420D+02	1.0169D+00	8.7435D+01	2.5439D+02	1.0000D+00
13	9.5661D+01	6.3493D+01	6.0000D+01	0.0000D+00	0.0000D+00	0.0000D+00
14	1.1167D+02	7.9444D+01	6.0000D+01	0.0000D+00	0.0000D+00	0.0000D+00
15	5.1934D+01	2.2555D+01	2.1035D+00	9.9972D+01	2.5439D+02	0.0000D+00
16	2.7754D+02	2.3294D+02	2.5622D+00	5.4363D+00	7.5975D+01	0.0000D+00
17	2.4100D+02	6.7782D+02	2.1407D+00	9.3094D+01	2.5439D+02	1.0000D+00
18	1.2894D+02	9.6693D+01	3.1300D+01	0.0000D+00	0.0000D+00	0.0000D+00
19	1.6880D+02	5.3357D+01	3.5805D+00	3.0967D+01	7.5975D+01	0.0000D+00
20	4.2238D+01	5.4572D+02	1.9601D+00	1.0000D+02	7.5975D+01	1.0000D+00
21	1.8843D+02	6.3785D+01	1.0455D+00	4.8576D+01	2.5439D+02	0.0000D+00
22	1.7299D+02	5.0018D+01	1.1848D-01	5.4577D+01	2.5439D+02	0.0000D+00
23	1.9199D+02	6.2475D+02	2.2220D+00	9.7551D+01	2.5439D+02	1.0000D+00
24	3.8000D+02	3.4529D+02	2.5318D+00	4.4711D+00	2.5439D+02	0.0000D+00
25	1.1215D+02	-2.2105D+01	4.6352D+00	4.7809D+01	2.5439D+02	0.0000D+00
26	1.6880D+02	6.4434D+02	1.0487D+00	9.4932D+01	7.5975D+01	1.0000D+00
27	4.2238D+01	1.0276D+01	1.4341D-01	9.9582D+01	7.5975D+01	0.0000D+00
28	4.2088D+01	2.2555D+01	2.1035D+00	9.9972D+01	7.5975D+01	2.0989D-02
29	9.6187D+01	7.3932D+01	2.1035D+00	9.9972D+01	2.5439D+02	0.0000D+00
30	6.6087D+01	5.6059D+02	2.1035D+00	9.9972D+01	7.5975D+01	1.0000D+00
31	2.4525D+02	1.3433D+02	9.6425D-01	3.4553D+01	2.5439D+02	0.0000D+00
32	2.7070D+02	1.7207D+02	3.5487D+00	2.8245D+01	2.5439D+02	0.0000D+00
33	1.1215D+02	-2.2105D+01	4.6352D+00	4.7809D+01	2.5439D+02	0.0000D+00
34	1.9018D+02	6.5545D+01	4.6352D+00	4.7809D+01	2.5439D+02	0.0000D+00
35	1.9018D+02	6.5545D+01	9.2705D-01	4.7809D+01	2.5439D+02	0.0000D+00
36	2.0836D+02	1.1789D+02	3.1655D+00	2.0726D+01	7.5975D+01	0.0000D+00
37	2.0836D+02	7.1263D+02	6.3371D-01	8.5668D+01	7.5975D+01	1.0000D+00
38	1.9460D+02	7.0803D+01	3.7404D+00	4.8200D+01	2.5439D+02	0.0000D+00
39	2.4019D+02	1.2720D+02	2.9350D+00	3.5849D+01	2.5439D+02	0.0000D+00
40	2.4019D+02	6.7675D+02	7.7322D-01	9.3208D+01	2.5439D+02	1.0000D+00
41	2.4145D+02	6.7843D+02	1.3675D+00	9.3030D+01	2.5439D+02	1.0000D+00
42	2.4145D+02	1.2897D+02	3.8992D+00	3.5529D+01	2.5439D+02	0.0000D+00
43	1.9018D+02	6.5545D+01	3.7082D+00	4.7809D+01	2.5439D+02	0.0000D+00
44	1.0343D+02	7.1231D+01	8.7000D+00	0.0000D+00	0.0000D+00	0.0000D+00
45	1.2508D+02	9.2837D+01	8.7000D+00	0.0000D+00	0.0000D+00	0.0000D+00
46	8.0000D+01	4.7923D+01	4.3480D+01	0.0000D+00	0.0000D+00	0.0000D+00
47	5.6255D+01	2.4379D+01	4.3480D+01	0.0000D+00	0.0000D+00	0.0000D+00
48	1.1194D+02	9.2704D+01	2.1035D+00	9.9972D+01	2.5439D+02	0.0000D+00
49	1.1284D+02	8.8865D+01	3.9156D-02	9.8471D+01	2.5439D+02	0.0000D+00
50	1.1284D+02	5.5638D+02	2.0643D+00	1.0000D+02	2.5439D+02	1.0000D+00
51	1.2810D+02	9.5854D+01	4.0000D+01	0.0000D+00	0.0000D+00	0.0000D+00
52	1.0343D+02	7.1231D+01	4.0000D+01	0.0000D+00	0.0000D+00	0.0000D+00
53	9.5000D+01	6.2835D+01	6.0000D+01	0.0000D+00	0.0000D+00	0.0000D+00
54	1.1238D+02	8.0148D+01	6.0000D+01	0.0000D+00	0.0000D+00	0.0000D+00
55	9.5000D+01	6.2835D+01	5.1500D+01	0.0000D+00	0.0000D+00	0.0000D+00
56	1.1419D+02	8.1960D+01	5.1500D+01	0.0000D+00	0.0000D+00	0.0000D+00

Table 2. Cycle State Points at a 47°F Ambient for the GAX Heat Pumping Cycle

STATE POINT	TEMPER.	ENTHALPY	FLOW RATE	CONCENTR.	PRESSURE	VAPOR FR.
1	4.7000D+01	1.5224D+01	6.0000D+01	0.0000D+00	0.0000D+00	0.0000D+00
2	3.1900D+01	3.1156D-01	6.0000D+01	0.0000D+00	0.0000D+00	0.0000D+00
3	6.8637D+01	-6.2255D+01	0.0000D+00	5.8971D+01	6.0611D+01	0.0000D+00
4	2.0573D+02	1.7387D+02	9.4000D+00	0.0000D+00	0.0000D+00	0.0000D+00
5	2.5101D+02	2.1976D+02	9.4000D+00	0.0000D+00	0.0000D+00	0.0000D+00
6	2.6172D+02	2.1465D+02	2.3707D+00	6.0746D+00	2.7806D+02	0.0000D+00
7	9.3557D+01	6.1400D+01	3.1300D+01	0.0000D+00	0.0000D+00	0.0000D+00
8	2.5000D+03	2.8525D+03	4.1700D-01	0.0000D+00	0.0000D+00	0.0000D+00
9	4.7839D+02	4.5445D+02	4.1700D-01	0.0000D+00	0.0000D+00	0.0000D+00
10	1.4396D+02	5.7415D+02	1.8279D+00	9.9848D+01	2.7806D+02	1.0000D+00
11	2.0038D+02	7.7711D+01	9.6654D-01	4.8611D+01	2.7806D+02	0.0000D+00
12	2.6446D+02	7.0563D+02	1.0413D+00	9.0008D+01	2.7806D+02	1.0000D+00
13	9.4663D+01	6.2499D+01	3.4000D+01	0.0000D+00	0.0000D+00	0.0000D+00
14	1.1816D+02	8.5925D+01	3.4000D+01	0.0000D+00	0.0000D+00	0.0000D+00
15	4.3483D+01	1.2533D+01	1.8279D+00	9.9848D+01	2.7806D+02	0.0000D+00
16	2.5979D+02	2.1318D+02	2.3642D+00	5.8725D+00	6.0611D+01	0.0000D+00
17	2.3534D+02	6.6539D+02	1.8947D+00	9.4389D+01	2.7806D+02	1.0000D+00
18	1.2008D+02	8.7835D+01	3.1300D+01	0.0000D+00	0.0000D+00	0.0000D+00
19	1.6401D+02	5.2887D+01	3.1744D+00	2.8370D+01	6.0611D+01	0.0000D+00
20	3.1766D+01	5.4301D+02	1.6916D+00	1.0000D+02	6.0611D+01	1.0000D+00
21	1.9217D+02	6.7837D+01	9.4952D-01	4.7740D+01	2.7806D+02	0.0000D+00
22	1.8138D+02	5.9379D+01	1.0980D-01	5.4156D+01	2.7806D+02	0.0000D+00
23	2.0038D+02	6.2882D+02	1.9377D+00	9.7259D+01	2.7806D+02	1.0000D+00
24	3.8000D+02	3.4212D+02	2.3707D+00	6.0746D+00	2.7806D+02	0.0000D+00
25	1.0174D+02	-3.3498D+01	4.1986D+00	4.6901D+01	2.7806D+02	0.0000D+00
26	1.6401D+02	6.4756D+02	8.0377D-01	9.4128D+01	6.0611D+01	1.0000D+00
27	3.1766D+01	-6.6717D+00	1.3635D-01	9.7965D+01	6.0611D+01	0.0000D+00
28	3.1058D+01	1.2533D+01	1.8279D+00	9.9848D+01	6.0611D+01	2.5852D-02
29	1.0092D+02	7.9141D+01	1.8279D+00	9.9848D+01	2.7806D+02	0.0000D+00
30	6.8637D+01	5.6862D+02	1.8279D+00	9.9848D+01	6.0611D+01	1.0000D+00
31	2.3416D+02	1.1768D+02	9.0652D-01	3.9392D+01	2.7806D+02	0.0000D+00
32	2.6446D+02	1.5997D+02	3.4119D+00	3.1690D+01	2.7806D+02	0.0000D+00
33	1.0174D+02	-3.3498D+01	4.1986D+00	4.6901D+01	2.7806D+02	0.0000D+00
34	1.9331D+02	6.8943D+01	4.1986D+00	4.6901D+01	2.7806D+02	0.0000D+00
35	1.9331D+02	6.8943D+01	8.3972D-01	4.6901D+01	2.7806D+02	0.0000D+00
36	2.1153D+02	1.3276D+02	2.7570D+00	1.6355D+01	6.0611D+01	0.0000D+00
37	2.1153D+02	7.4681D+02	3.8632D-01	7.9444D+01	6.0611D+01	1.0000D+00
38	2.0314D+02	8.0635D+01	3.4260D+00	4.7830D+01	2.7806D+02	0.0000D+00
39	2.3560D+02	1.1956D+02	2.8804D+00	3.9016D+01	2.7806D+02	0.0000D+00
40	2.3560D+02	6.6570D+02	4.7851D-01	9.4360D+01	2.7806D+02	1.0000D+00
41	2.3526D+02	6.6529D+02	1.4162D+00	9.4399D+01	2.7806D+02	1.0000D+00
42	2.3526D+02	1.1911D+02	3.7869D+00	3.9106D+01	2.7806D+02	0.0000D+00
43	1.9331D+02	6.8943D+01	3.3589D+00	4.6901D+01	2.7806D+02	0.0000D+00
44	9.3557D+01	6.1400D+01	6.6000D+00	0.0000D+00	0.0000D+00	0.0000D+00
45	1.1825D+02	8.6013D+01	6.6000D+00	0.0000D+00	0.0000D+00	0.0000D+00
46	1.2026D+02	8.8013D+01	3.4000D+01	0.0000D+00	0.0000D+00	0.0000D+00
47	9.3557D+01	6.1400D+01	3.4000D+01	0.0000D+00	0.0000D+00	0.0000D+00
48	1.1800D+02	9.9599D+01	1.8279D+00	9.9848D+01	2.7806D+02	0.0000D+00
49	1.2000D+02	9.1751D+01	8.4742D-02	9.6725D+01	2.7806D+02	0.0000D+00
50	1.2000D+02	5.5687D+02	1.7432D+00	1.0000D+02	2.7806D+02	1.0000D+00
51	1.1999D+02	8.7752D+01	7.1900D+01	0.0000D+00	0.0000D+00	0.0000D+00
52	9.3557D+01	6.1400D+01	7.1900D+01	0.0000D+00	0.0000D+00	0.0000D+00
53	6.5000D+01	3.3041D+01	4.7663D+01	0.0000D+00	0.0000D+00	0.0000D+00
54	1.0500D+02	7.2794D+01	4.7663D+01	0.0000D+00	0.0000D+00	0.0000D+00

Table 3. Cycle State Points at a 17°F Ambient for the LHE Heat Pumping Cycle

STATE POINT	TEMPER.	ENTHALPY	FLOW RATE	CONCENTR.	PRESSURE	VAPOR FR.
1	1.7000D+01	-1.4373D+01	6.0000D+01	0.0000D+00	0.0000D+00	0.0000D+00
2	5.6328D+00	-2.5555D+01	6.0000D+01	0.0000D+00	0.0000D+00	0.0000D+00
3	7.4805D+01	-6.2366D+01	0.0000D+00	4.5341D+01	3.3668D+01	0.0000D+00
4	9.8275D+01	-3.2051D+01	3.7316D+00	3.7678D+01	2.4189D+02	0.0000D+00
5	2.3356D+02	1.1802D+02	3.7316D+00	3.7678D+01	2.4189D+02	0.0000D+00
6	2.6101D+02	2.2056D+02	2.4050D+00	3.6036D+00	2.4189D+02	0.0000D+00
7	9.3138D+01	6.0982D+01	3.1300D+01	0.0000D+00	0.0000D+00	0.0000D+00
8	2.5000D+03	2.8525D+03	4.1700D-01	0.0000D+00	0.0000D+00	0.0000D+00
9	4.7839D+02	4.5445D+02	4.1700D-01	0.0000D+00	0.0000D+00	0.0000D+00
10	1.4709D+02	5.8657D+02	1.3266D+00	9.9450D+01	2.4189D+02	1.0000D+00
11	2.3409D+02	1.1971D+02	3.7769D+00	3.6322D+01	2.4189D+02	0.0000D+00
12	2.6456D+02	7.1789D+02	1.0129D+00	8.8181D+01	2.4189D+02	1.0000D+00
13	9.3743D+01	6.1584D+01	3.4000D+01	0.0000D+00	0.0000D+00	0.0000D+00
14	1.0946D+02	7.7236D+01	3.4000D+01	0.0000D+00	0.0000D+00	0.0000D+00
15	2.3387D+01	-1.1444D+01	1.3266D+00	9.9450D+01	2.4189D+02	0.0000D+00
16	2.3456D+02	1.9327D+02	2.4053D+00	3.6157D+00	3.3668D+01	0.0000D+00
17	2.3409D+02	6.7183D+02	1.3720D+00	9.3675D+01	2.4189D+02	1.0000D+00
18	1.1848D+02	8.6241D+01	3.1300D+01	0.0000D+00	0.0000D+00	0.0000D+00
19	1.7078D+02	8.6437D+01	2.8994D+00	1.7505D+01	3.3668D+01	0.0000D+00
20	7.4035D+00	5.3620D+02	1.2320D+00	1.0000D+02	3.3668D+01	1.0000D+00
21	2.4737D+02	1.3410D+02	3.8780D+00	3.7817D+01	2.4189D+02	0.0000D+00
22	2.1509D+02	9.4599D+01	1.4643D-01	4.1356D+01	2.4189D+02	0.0000D+00
23	2.3409D+02	6.7183D+02	1.4730D+00	9.3675D+01	2.4189D+02	1.0000D+00
24	3.8000D+02	3.4696D+02	2.4050D+00	3.6036D+00	2.4189D+02	0.0000D+00
25	9.8275D+01	-3.2051D+01	3.7316D+00	3.7678D+01	2.4189D+02	0.0000D+00
26	1.7078D+02	6.9974D+02	4.9445D-01	8.5118D+01	3.3668D+01	1.0000D+00
27	7.4035D+00	-5.1501D+01	9.4570D-02	9.2284D+01	3.3668D+01	0.0000D+00
28	4.6917D+00	-1.1444D+01	1.3266D+00	9.9450D+01	3.3668D+01	3.6925D-02
29	9.5928D+01	7.1931D+01	1.3266D+00	9.9450D+01	2.4189D+02	0.0000D+00
30	7.4805D+01	5.7768D+02	1.3266D+00	9.9450D+01	3.3668D+01	1.0000D+00
31	2.3409D+02	1.1971D+02	3.7769D+00	3.6322D+01	2.4189D+02	0.0000D+00
32	2.6456D+02	1.6430D+02	3.4178D+00	2.8668D+01	2.4189D+02	0.0000D+00
33	9.3138D+01	6.0982D+01	6.6000D+00	0.0000D+00	0.0000D+00	0.0000D+00
34	2.3446D+02	1.9319D+02	2.4050D+00	3.6036D+00	2.4189D+02	0.0000D+00
35	2.4860D+02	1.3565D+02	3.7316D+00	3.7678D+01	2.4189D+02	0.0000D+00
36	1.2317D+02	9.0925D+01	6.6000D+00	0.0000D+00	0.0000D+00	0.0000D+00
37	9.3138D+01	6.0982D+01	3.4000D+01	0.0000D+00	0.0000D+00	0.0000D+00
38	1.1329D+02	8.1062D+01	3.4000D+01	0.0000D+00	0.0000D+00	0.0000D+00
39	1.0891D+02	8.7364D+01	1.3266D+00	9.9450D+01	2.4189D+02	0.0000D+00
40	1.1098D+02	7.9010D+01	1.8875D-01	9.6134D+01	2.4189D+02	0.0000D+00
41	1.1098D+02	5.5645D+02	1.1379D+00	1.0000D+02	2.4189D+02	1.0000D+00
42	1.1646D+02	8.4222D+01	7.1900D+01	0.0000D+00	0.0000D+00	0.0000D+00
43	9.3138D+01	6.0982D+01	7.1900D+01	0.0000D+00	0.0000D+00	0.0000D+00
44	6.5000D+01	3.3041D+01	4.2033D+01	0.0000D+00	0.0000D+00	0.0000D+00
45	1.0500D+02	7.2794D+01	4.2033D+01	0.0000D+00	0.0000D+00	0.0000D+00

Table 4. Cycle State Points at a -17°F Ambient for the LHE Cycle with 150 Percent Burner Overfiring

STATE POINT	TEMPER.	ENTHALPY	FLOW RATE	CONCENTR.	PRESSURE	VAPOR FR.
1	-1.7000D+01	-4.7767D+01	6.0000D+01	0.0000D+00	0.0000D+00	0.0000D+00
2	-2.8009D+01	-5.8546D+01	6.0000D+01	0.0000D+00	0.0000D+00	0.0000D+00
3	7.1516D+01	-5.2716D+01	0.0000D+00	3.2285D+01	1.3641D+01	0.0000D+00
4	1.0904D+02	1.1396D+01	6.5098D+00	2.1291D+01	2.3166D+02	0.0000D+00
5	1.9671D+02	1.0393D+02	6.5098D+00	2.1291D+01	2.3166D+02	0.0000D+00
6	3.2905D+02	2.9358D+02	5.2553D+00	2.8847D+00	2.3166D+02	0.0000D+00
7	9.4720D+01	6.2557D+01	3.1300D+01	0.0000D+00	0.0000D+00	0.0000D+00
8	2.5000D+03	2.8525D+03	6.2600D-01	0.0000D+00	0.0000D+00	0.0000D+00
9	4.8022D+02	4.5637D+02	6.2600D-01	0.0000D+00	0.0000D+00	0.0000D+00
10	1.7110D+02	6.1049D+02	1.2545D+00	9.8395D+01	2.3166D+02	1.0000D+00
11	2.8631D+02	2.0019D+02	7.0343D+00	2.2594D+01	2.3166D+02	0.0000D+00
12	3.0458D+02	8.1573D+02	1.4976D+00	7.2923D+01	2.3166D+02	1.0000D+00
13	9.5163D+01	6.2997D+01	3.4000D+01	0.0000D+00	0.0000D+00	0.0000D+00
14	1.0895D+02	7.6731D+01	3.4000D+01	0.0000D+00	0.0000D+00	0.0000D+00
15	-9.1582D-01	-4.1959D+01	1.2545D+00	9.8395D+01	2.3166D+02	0.0000D+00
16	1.9891D+02	1.6351D+02	5.0974D+00	1.2728D+00	1.3641D+01	0.0000D+00
17	2.8631D+02	7.6748D+02	1.7790D+00	8.0818D+01	2.3166D+02	1.0000D+00
18	1.2757D+02	9.5325D+01	3.1300D+01	0.0000D+00	0.0000D+00	0.0000D+00
19	1.7136D+02	1.2088D+02	5.6218D+00	6.2766D+00	1.3641D+01	0.0000D+00
20	-2.2436D+01	5.2783D+02	1.1489D+00	1.0000D+02	1.3641D+01	1.0000D+00
21	2.7635D+02	1.9084D+02	6.9203D+00	2.1635D+01	2.3166D+02	0.0000D+00
22	2.6731D+02	1.7003D+02	4.1047D-01	2.7095D+01	2.3166D+02	0.0000D+00
23	2.8631D+02	7.6748D+02	1.6650D+00	8.0818D+01	2.3166D+02	1.0000D+00
24	3.8000D+02	3.4833D+02	5.2553D+00	2.8847D+00	2.3166D+02	0.0000D+00
25	1.0904D+02	1.1396D+01	6.5098D+00	2.1291D+01	2.3166D+02	0.0000D+00
26	1.7136D+02	8.5517D+02	3.6651D-01	5.4913D+01	1.3641D+01	1.0000D+00
27	-2.2436D+01	-1.1704D+02	1.0561D-01	8.0937D+01	1.3641D+01	0.0000D+00
28	-3.0231D+01	-4.1959D+01	1.2545D+00	9.8395D+01	1.3641D+01	5.4569D-02
29	9.6628D+01	6.9334D+01	1.2545D+00	9.8395D+01	2.3166D+02	0.0000D+00
30	7.1516D+01	5.8484D+02	1.2545D+00	9.8395D+01	1.3641D+01	1.0000D+00
31	2.8631D+02	2.0019D+02	7.0343D+00	2.2594D+01	2.3166D+02	0.0000D+00
32	3.0458D+02	2.2986D+02	6.7529D+00	1.8417D+01	2.3166D+02	0.0000D+00
33	9.4720D+01	6.2557D+01	8.7000D+00	0.0000D+00	0.0000D+00	0.0000D+00
34	2.2381D+02	1.8430D+02	5.2553D+00	2.8847D+00	2.3166D+02	0.0000D+00
35	2.7686D+02	1.9215D+02	6.5098D+00	2.1291D+01	2.3166D+02	0.0000D+00
36	1.4561D+02	1.1338D+02	8.7000D+00	0.0000D+00	0.0000D+00	0.0000D+00
37	9.4720D+01	6.2557D+01	3.4000D+01	0.0000D+00	0.0000D+00	0.0000D+00
38	1.1476D+02	8.2524D+01	3.4000D+01	0.0000D+00	0.0000D+00	0.0000D+00
39	1.0670D+02	8.1280D+01	1.2545D+00	9.8395D+01	2.3166D+02	0.0000D+00
40	1.1071D+02	6.6690D+01	2.6518D-01	9.2408D+01	2.3166D+02	0.0000D+00
41	1.1071D+02	5.5716D+02	9.8935D-01	1.0000D+02	2.3166D+02	1.0000D+00
42	1.2381D+02	9.1566D+01	7.4000D+01	0.0000D+00	0.0000D+00	0.0000D+00
43	9.4720D+01	6.2557D+01	7.4000D+01	0.0000D+00	0.0000D+00	0.0000D+00
44	6.5000D+01	3.3041D+01	5.4002D+01	0.0000D+00	0.0000D+00	0.0000D+00
45	1.0500D+02	7.2794D+01	5.4002D+01	0.0000D+00	0.0000D+00	0.0000D+00

Table 5. Component Heat Duty (Btu/min) at Four Key Ambient Temperatures

	Ambient Temperature			
Components	-17 °F	17 °F	47 °F	95 °F
Indoor Coil (Hydronic)	2147	1671	1894	1039
Outdoor Coil—Refrigerant	647-E	671-E	895-E	1046-C
Outdoor Coil—Hydronic	0	0	0	993
Refrigerant/Hydronic Coil	679-C	683-C	905-C	1039-E
Generator-Fired Section	1500	1000	1000	1000
Generator Heat Exchanger	288	304	302	298
Generator Absorber Heat Exchanger	0	0	431	647
Solution-Cooled Absorber	602	560	430	412
Hydronically Cooled Absorber	1026	791	827	826
Rectifier	442	198	162	167
Liquid Solution Heat Exchanger	574	658	0	0
Refrigerant Precooler	139	111	122	86
Cycle	LHE	LHE	GAX	GAX

-E = Evaporator duty
-C = Condenser duty

COP Predictions

The selected GAX cycle configuration results in the overall cycle performance shown in Figures 4 and 5. These figures show the overall COP and capacity as a function of outdoor ambient temperature over the range for -30°F to 115°F. Figures 6 and 7 show the cycle COP over the same temperature range. Model predictions were made at intervals of 5 to 10°F over the temperature range of interest. The burner efficiency is assumed to be 83 percent, and the system losses are assumed to average 5 percent. Thus the overall COP is always 0.78 times the cycle COP.

The burner efficiency value was chosen to represent the best burner efficiency possible while avoiding condensation of water from the flue gas. Some condensation can be tolerated on startup under some conditions, but the chosen efficiency avoids condensation under many conditions. The use of a fully condensing burner, with an efficiency of 90 to 95 percent, was specifically avoided due to concerns about system complexity and cost and concerns about outdoor disposal of condensate in subfreezing ambients. The overall system heat loss of 5 percent is a target that represents good, practical practice. Some previous heat pumps have had heat losses of 5 to 10 percent, so it is believed that the 5 percent target can be achieved in a final product.

The results shown in Figures 4 to 7 are based on a consistent set of component sizes, as defined by the UA product for each heat exchanger. The UA product is the overall heat transfer coefficient (U) for the component times the heat exchange area (A): the units are Btu/min°F. The UA values for the components are given in Table 6. Because of the nature of the partially hydronically coupled cycle we are using, two of the major components perform different functions in the two modes of operation. As noted on Table 6, the Outdoor Coil-Refrigerant and the Refrigerant/Hydronic Coil interchange their functions as evaporator and condenser when the unit switches from heating to cooling.

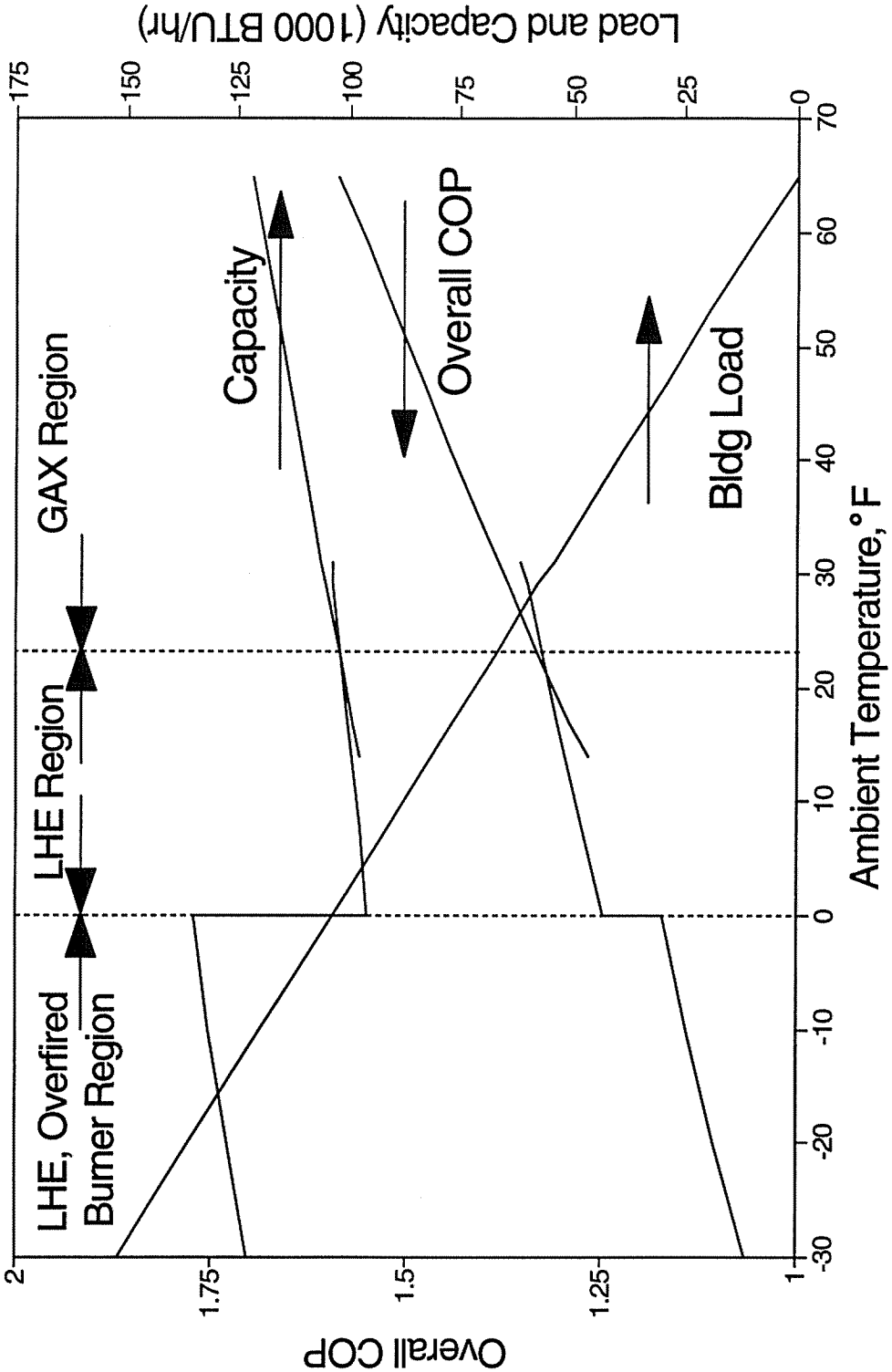

Figure 4. **Overall COP, capacity, and building heating load for LHE and GAX heat pumps (flue efficiency 83 percent, heat loss 5 percent)**

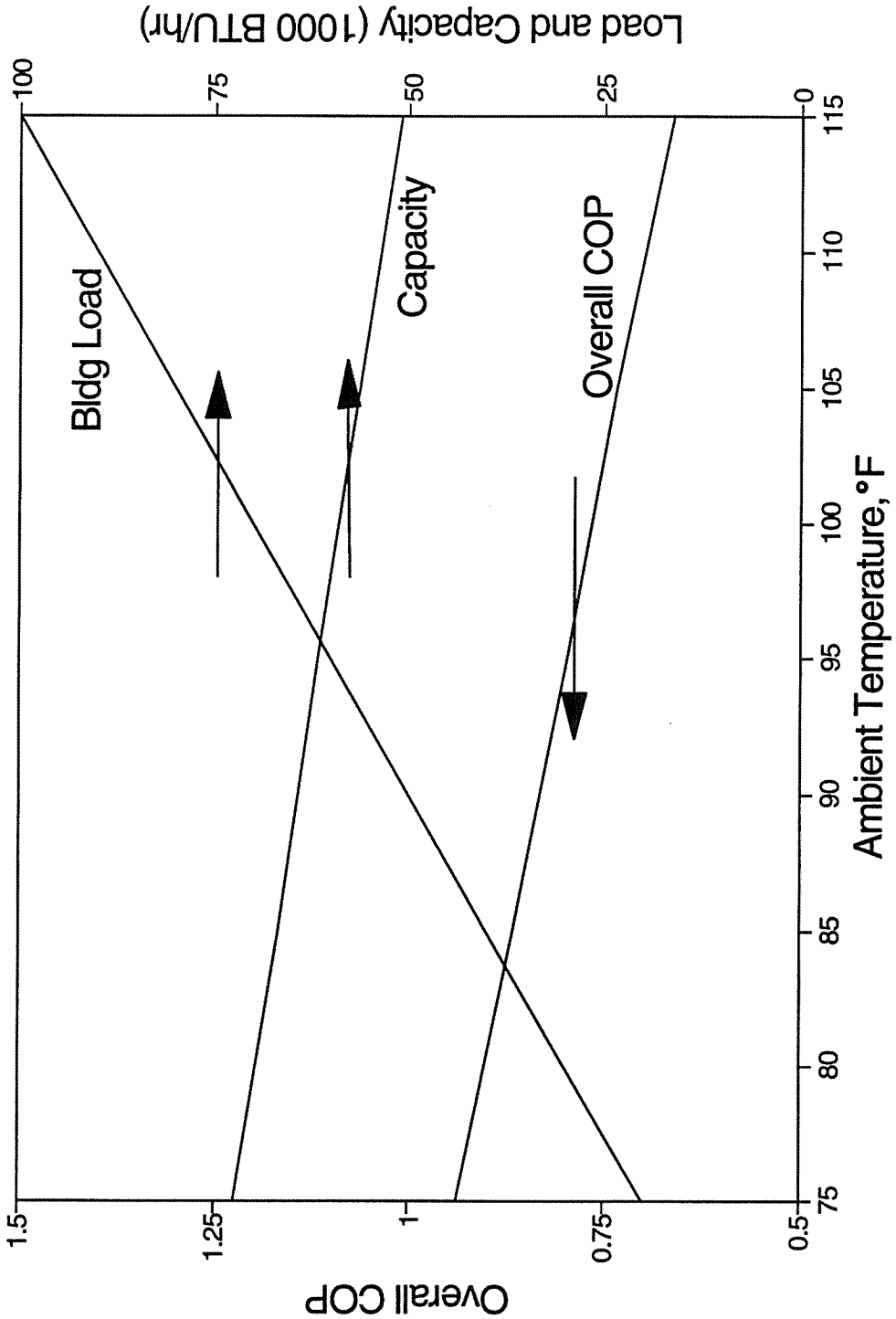

Figure 5. **Overall COP, capacity and building cooling load for a GAX air conditioner (flue efficiency 83 percent, heat loss 5 percent)**

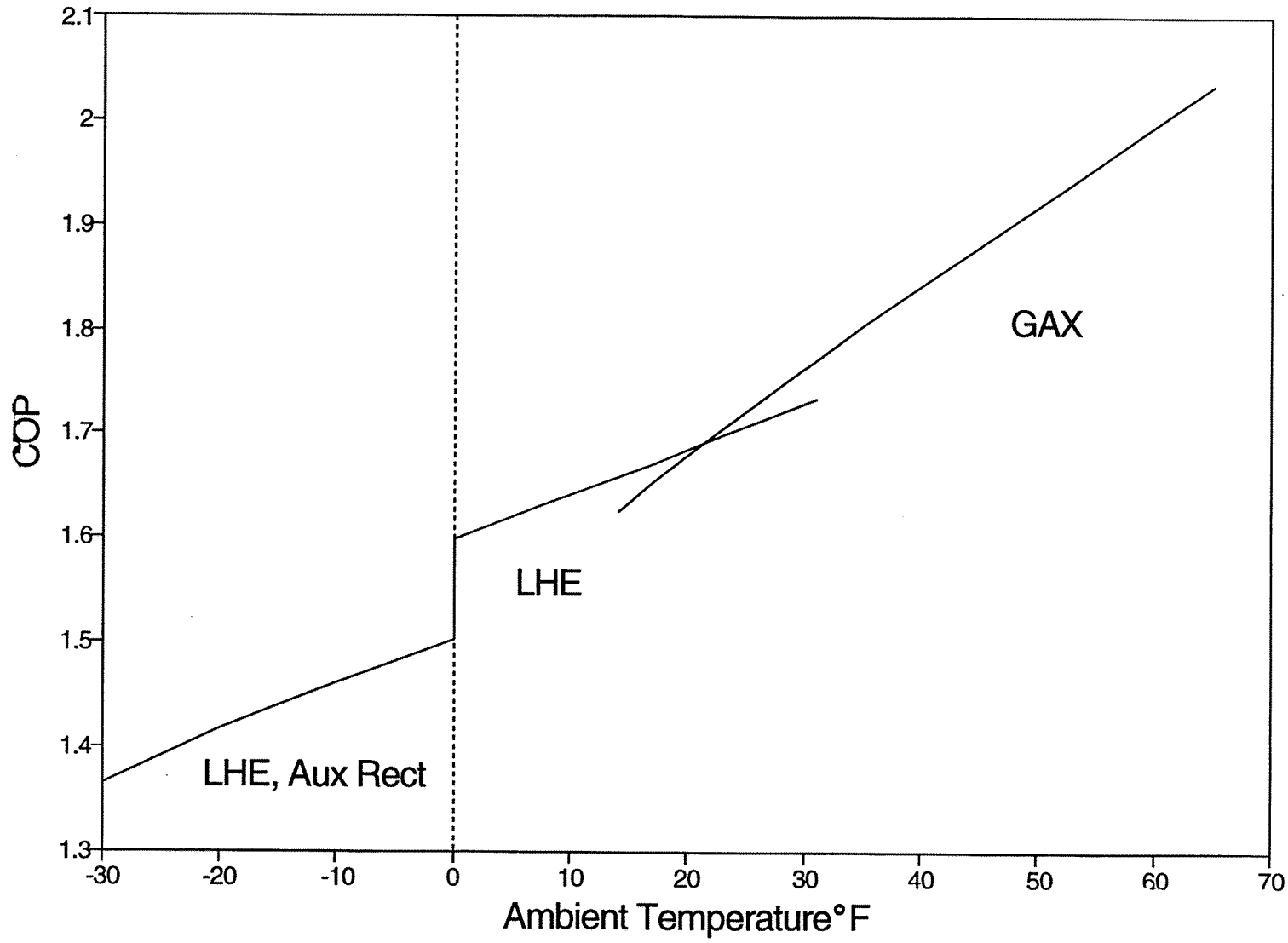

Figure 6. Cycle COP for LHE and GAX heat pumps (flue efficiency 83 percent, heat loss 5 percent)

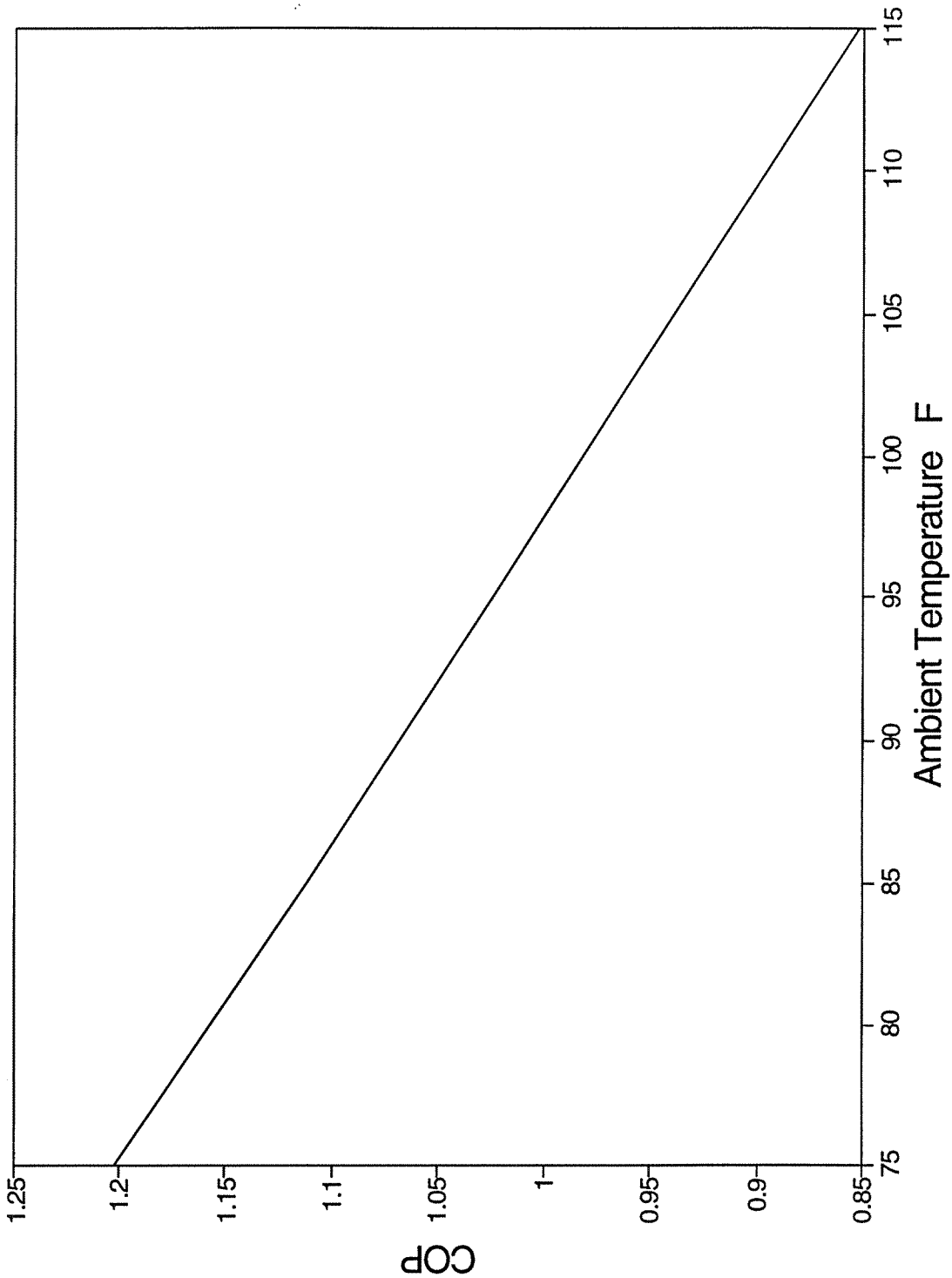

Figure 7. **Cycle COP for a GAX air conditioner (flue efficiency 83 percent heat loss 5 percent)**

Table 6. Component Sizes

UA = (Overall Heat Transfer Coefficient) x (Area)
(Btu/min °F)

Indoor Coil (Hydronic)	90
Outdoor Coil—Refrigerant*	180
Outdor Coil—Hydronic**	90
Refrigerant/Hydronic Coil***	105
Generator-Fired Section	1.9
Generator Heat Exchanger	5.0
Generator Absorber Heat Exchanger**	21.5
Solution-Cooled Absorber (SCA)	12
Hydronically Cooled Absorber	38.9
Rectifier—1 (Air Conditioning and Cold Ambient Heat Pumping)	1.7
Rectifier—2 (All Heat Pumping)	2.5
Liquid Solution Heater Exchanger+	15
Refrigerant Precooler	6

* Air conditioning condenser, heat pump evaporator.
** Used only in air conditioning.
*** Air conditioning evaporator, heat pump condenser.
\+ Used only below 20 °F ambient temperature.

Table 7. Standard Cycle Conditions

Generator Solution Outlet Temperature	380°F
Precooler Vapor Outlet	Dry and Saturated.
Capacity	5 RT at 95°F.
Generator Heat Input	Fixed for 5 RT at 95°F, 50 percent overfiring below 0°F.
Flow Control	Intelligently controlled modulating valves for solution and refrigerant.
Pump Flow	Pump designed to pass more than the expected flow at an condition. It uses a higher speed for operation below 0°F.

The standard conditions for these cycle calculations are given in Table 7.

The transition between the GAX cycle and the LHE cycle is predicted to take place at an outdoor ambient temperature of about 21 to 22°F. For practical controls the transitions should probably be at 20 and 23°F, i.e., use the GAX cycle down to 20°F and use the LHE cycle up to 23°F. The loss in COP and the increase in capacity at 0°F, as shown in Figures 4 and 6, is due to the overfiring of the burner for subzero ambients. When the ambient temperature is below 0°F the heat pump runs continuously, but the burner and solution pump cycle between their high and nominal settings. The burner control can be achieved with a second gas flow orifice and a solenoid valve. The pump speed control can be achieved with a two-speed (1725 and 1140 rpm) motor and a relay.

The use of 50 percent overfiring can carry the space heating load down to about -20°F, and provide most of the load at temperatures as low as -30°F. To provide operation at temperatures much below -30°F will require extremely careful system and pump design and may seriously compromise system performance at more reasonable temperatures or increase system costs significantly.

The linearity of the COP variation with ambient temperature shown in the air conditioning mode in Figure 7 is remarkable. No explicit efforts were made to obtain this result. The model assumptions were made to attain good performance over the entire ambint temperature range, but the surprising linearity of the results has not been attributed to any specific assumptions.

Key Component Sizing

The UA values given in Table 6 for the selected system are successive refinements of the UA values first defined in the confirmational cycle analyses. The confirmational analyses, discussed in Appendix A, resulted in the component UA values given in Table 8. This table gives the UA values in Btu/min°F for the nine basic cycle configurations and for three additional analyses using one cycle at extremely cold ambient conditions. Two of these additional analyses show the effect of overfiring the burner by 180 percent. In addition to the UA values, the table also shows the COP for each cycle. The components listed are

AHE	Absorber Heat Exchanger
Rect	Rectifier
G-GAX	Generator Section of the Generator Absorber Heat Exchanger
A-GAX	Absorber Section of the Generator Absorber Heat Exchanger
GHE	Generator Heat Exchanger
LHE	Liquid Heat Exchanger

The UA values listed for the G-GAX and the A-GAX are the required UA for each component operated as a hydronically coupled or a heat pipe-coupled set of components. These UA values resulted from setting the closest approach temperature to 10°F for each component.

Table 9 shows the results of the first step towards a single, consistent set of component UA values. The GAX cycle with a solution-cooled rectifier (GS cycle) was used to determine the effect on COP of varying the size of key components. These results were

Table 8. Key Component UA Values Resulting from Comparative Cycle Analysis

	Component UA (Btu/min °F)						
Cycle Code	AHE	Rect	G-GAX	A-GAX	GHE	LHE	Cycle COP
GH	18.3	—	46.8	200.0	5.4	—	1.9642
GS	15.7	2.9	75.0	50.0	5.4	—	1.9642
GT	18.2	—	76.0	50.0	5.4	—	1.9675
AH	15.3	—	—	—	6.9	—	1.59
AS	15.3	2.6	—	—	6.1	—	1.57
AT	15.4	—	—	—	4.7	—	1.58
LH	12.7	—	—	—	7.8	20.2	1.46
LS	4.4	3.7	—	—	7.8	20.2	1.47
LT	13.0	—	—	—	6.0	20.2	1.47
LH -40*	12.7	3.0	—	—	7.8	42.1	1.35
LH -40, x 1.8**	12.7	6.0	—	—	7.8	79.3	1.35
LH -40, x 1.8**	12.7	5.0	—	—	7.8	79.3	1.37

* LH Cycle, -40 °F evaporator temperature, nominal input.
** LH Cycle, -40 °F evaporator temperature, 180 percent burner overfiring.

all obtained at an evaporator inlet temperature of 36°F, representing both air conditioning and heat pumping operation. The first ten rows in the table show the results of single component UA variations. The bottom three rows show the results for specific combinations of the UA values from the first ten analyses. The goal was to determine how well the GAX cycle would function with UA values that had been determined from both GAX and LHE cycle analyses. The goal was to identify the smallest UA values that would give close to the best COP for the cycle.

Table 10 shows the results of a similar analysis for the LHE cycle. The table shows eight single component variations and four combination variations. These results showed that the cycle COP was not strongly affected by the choice of specific UA values within the ranges considered.

Table 11 shows the results of the final single component optimization analyses. Both the GAX and the LHE cycles were analyzed to evaluate the effect of rectifier UA on cycle COP using a hydronically cooled rectifier. These analyses showed near-optimum performance over a broad range of UA values, leading to a preliminary choice of 2.5 for the rectifier UA. This value was later found to be inadequate in very cold ambients and in air conditioning when the effects of the air heat exchangers were considered.

The results in Tables 8 through 11 show that the model is sensitive in detail to variations in the key input parameters. But more significantly, the cycle is shown to be tolerant of further reductions in the UA for many components without incurring significant reductions in cycle COP. Thus, a more cost-effective system may be designed using the cycle and component designs defined in this task, should future economic analyses indicate that lower cost components are desirable.

Table 9. Cycle COP for Various Key Components Sizes, GAX Cycle with Solution-Cooled Rectification (GS Cycle)

Component Sizes (Btu/min °F)					
AHE (2)	G-GAX (5)	Rect (7)	GHE (13)	A-GAX (14)	COP
5.37	74.88	2.879	15.67	50.0	1.9642
5.37	75.0	2.879	15.67	50.0	1.9643
5.37	75.0	3.0	15.67	50.0	1.9603
6.5	75.0	3.0	15.67	50.0	1.9612
8.0	75.0	3.0	15.67	50.0	1.9621
5.37	75.0	3.0	10.0	50.0	1.9350
5.37	75.0	3.0	12.5	50.0	1.9480
5.37	60.0	3.0	15.67	60.0	1.9588
5.37	50.0	3.0	15.67	50.0	1.9480
5.37	40.0	3.0	15.67	40.0	1.9339
8.0	60.0	3.0	10.0	60.0	1.9354
8.0	50.0	3.0	10.0	50.0	1.9252
8.0	40.0	3.0	10.0	40.0	1.9118

Table 10. Cycle COP for Various Key Component Sizes, Liquid Heat Exchanger Cycle with Solution-Cooled Rectification (LS Cycle)

Component Sizes				
Rect (7)	AHE (5)	GHE (2)	LHE (13)	Cycle COP
3.0	4.37	7.75	20.18	1.4790
3.0	4.37	5.0	20.18	1.4745
3.0	4.37	6.0	20.18	1.4766
3.0	10.0	7.75	20.18	1.4852
3.0	15.0	7.75	20.18	1.4875
3.0	20.0	7.75	20.18	1.4887
3.0	4.37	7.75	15.0	1.4698
3.0	4.37	7.75	25.0	1.4845
3.0	15.0	5.0	20.0	1.4814
3.0	15.0	5.0	25.0	1.4865
3.0	20.0	5.0	20.0	1.4824
3.0	20.0	5.0	25.0	1.4874

Table 11. Cycle COP for Various Values of Rectifier UA at Three Key Temperatures. LHE and GAX Cycles with Hydronically Cooled Rectification

	Ambient Temperature (°F)			
Rectifier UA (Btu/min °F)	**5**	**30**	**30**	**65**
1.8	—	—	1.6486	—
1.9	—	—	1.6521*	—
2.0	1.5190	1.6478	1.6520	1.9862
2.1	1.5388	1.6624	1.6498	2.0053
2.2	1.5429*	1.6637*	1.6467	2.0101
2.3	1.5428	1.6612	1.6428	2.0098
2.4	1.5403	1.6513	1.6386	2.0073
2.5	1.5369	1.6526	1.6342	2.0039
Cycle Code	LH	LH	GH	GH

*Optimum COP

Solution and Refrigerant Flow Rates

Figures 8 and 9 show the solution and refrigerant flow rates for both heat pumping and air conditioning. Except for the changes that occur at 0°F, the pumped solution flow rate changes very little. The significant changes in refrigerant flow rate and return solution flow rate are nearly compensating. These results are based on the assumption that the return solution flow rate is controlled by a modulating valve that maintains a constant 380°F at the generator exit. The key factor in the solution flow rate variation is not the flow rate itself, or even the generator solution exit temperature, although this temperature cannot be allowed to rise too high.

Generator Exit Concentration

Figures 10 and 11 show the generator exit ammonia composition for these analyses. Figure 10 shows how important it is to increase the solution flow rate when the burner is overfired by 50 percent in cold ambients. Without the added flow rate, the generator exit ammonia composition would approach zero at -30°F. The minimum value of about 1.8 percent by weight at -30°F is low but tolerable. Figure 11 shows the same composition for the air conditioning mode. At the lowest ambient temperatures, 70 to 80°F, the generator exit concentration is too low for reliable, steady operation. This situation can be corrected by programming the solution flow control valve to hold a lower temperature (perhaps 360°F) for air conditioning in ambient temperatures below about 85°F.

Rectifier Performance

Figures 12 to 15 show the performance of the rectifier in both modes of operation. The different scales for these figures highlight the small range of concentration change shown in Figures 12 and 13. Figure 12 shows the concentration of ammonia in the generator exit vapor, what might be called the raw vapor, for the heat pumping mode. The ammonia concentration is remarkably constant over the GAX cycle operating range. However, when

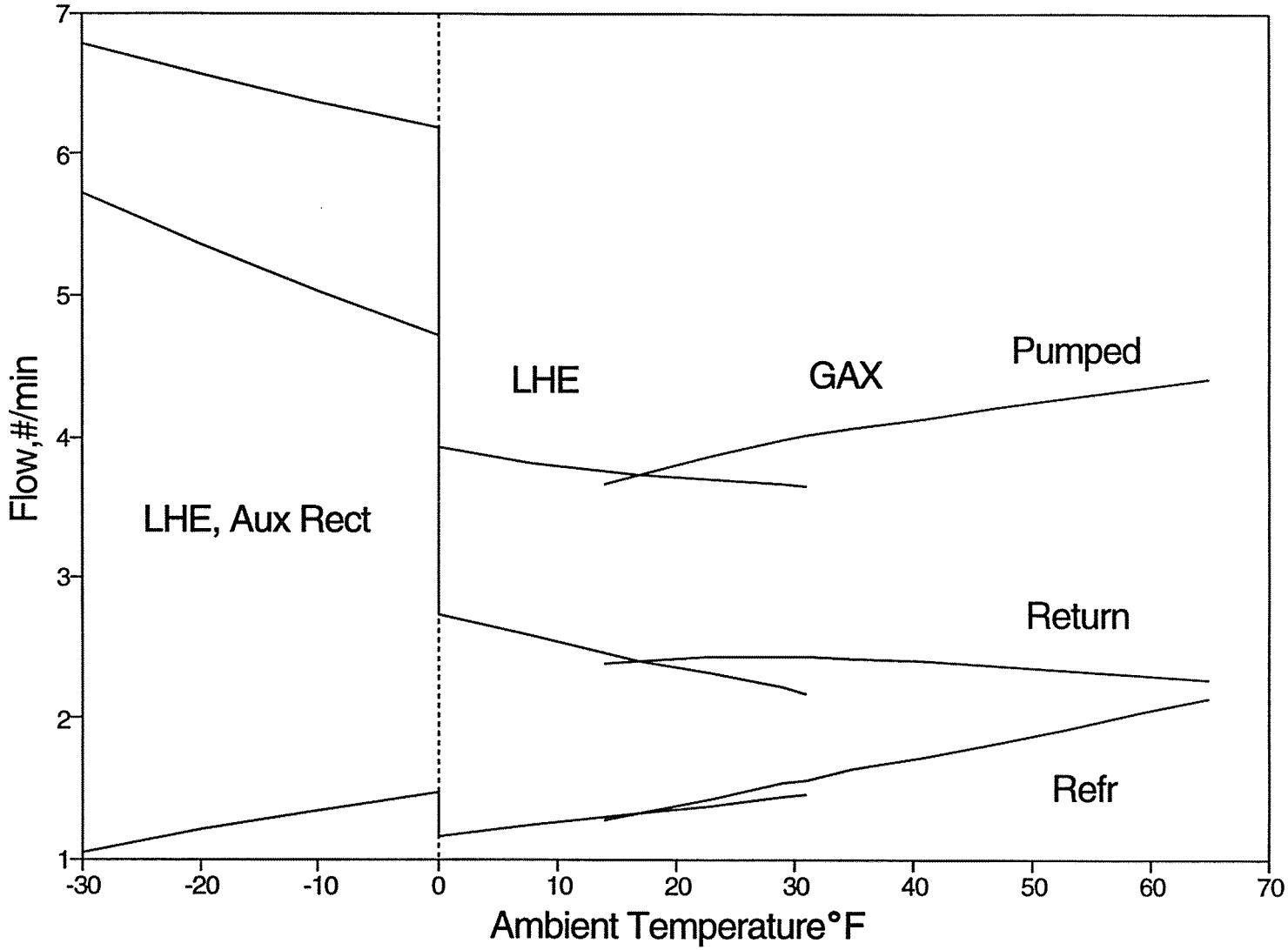

Figure 8. Solution and refrigerant flow rates for LHE and GAX heat pumps

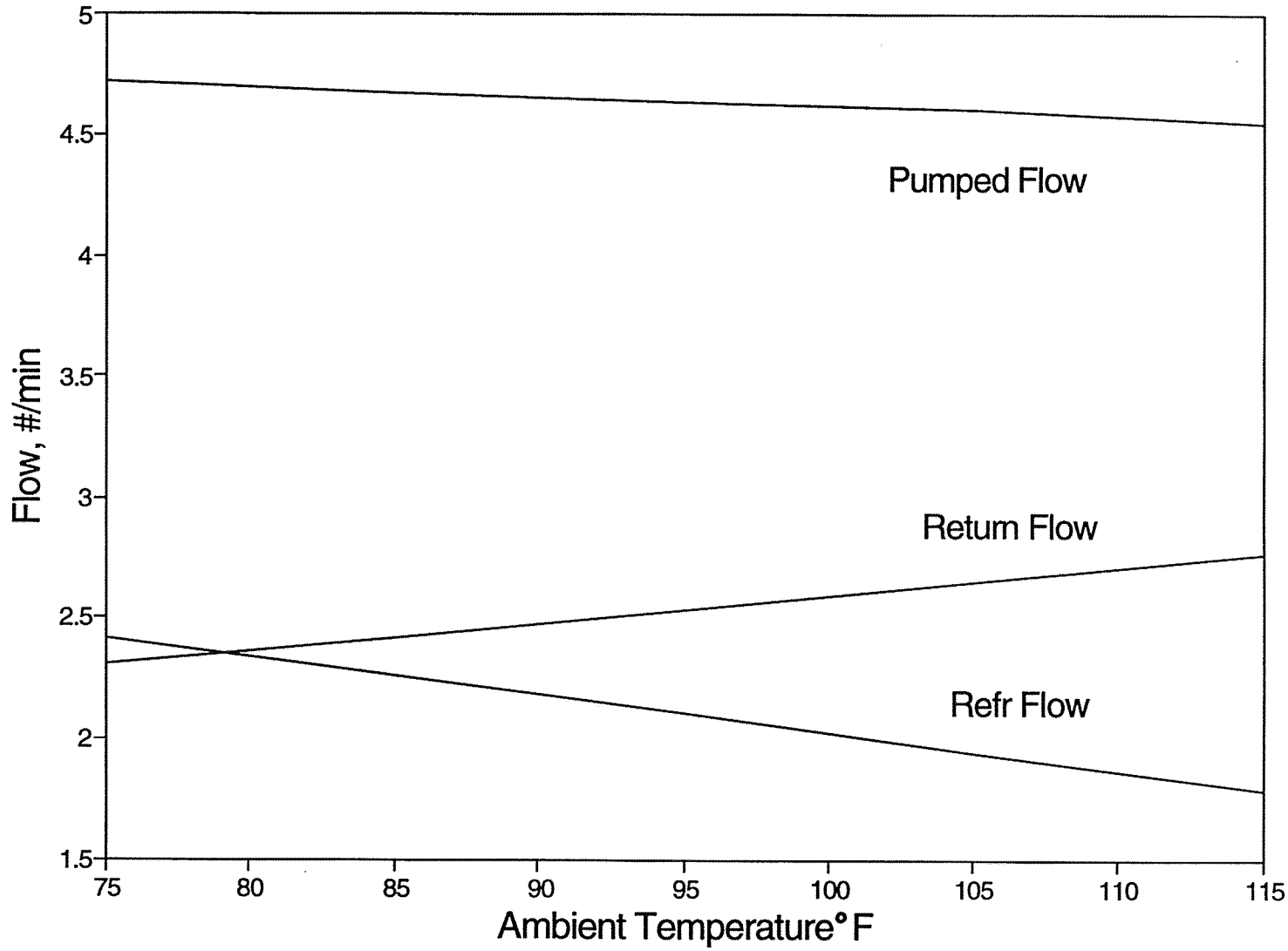

Figure 9. Solution and refrigerant flow rates for a GAX air conditioner

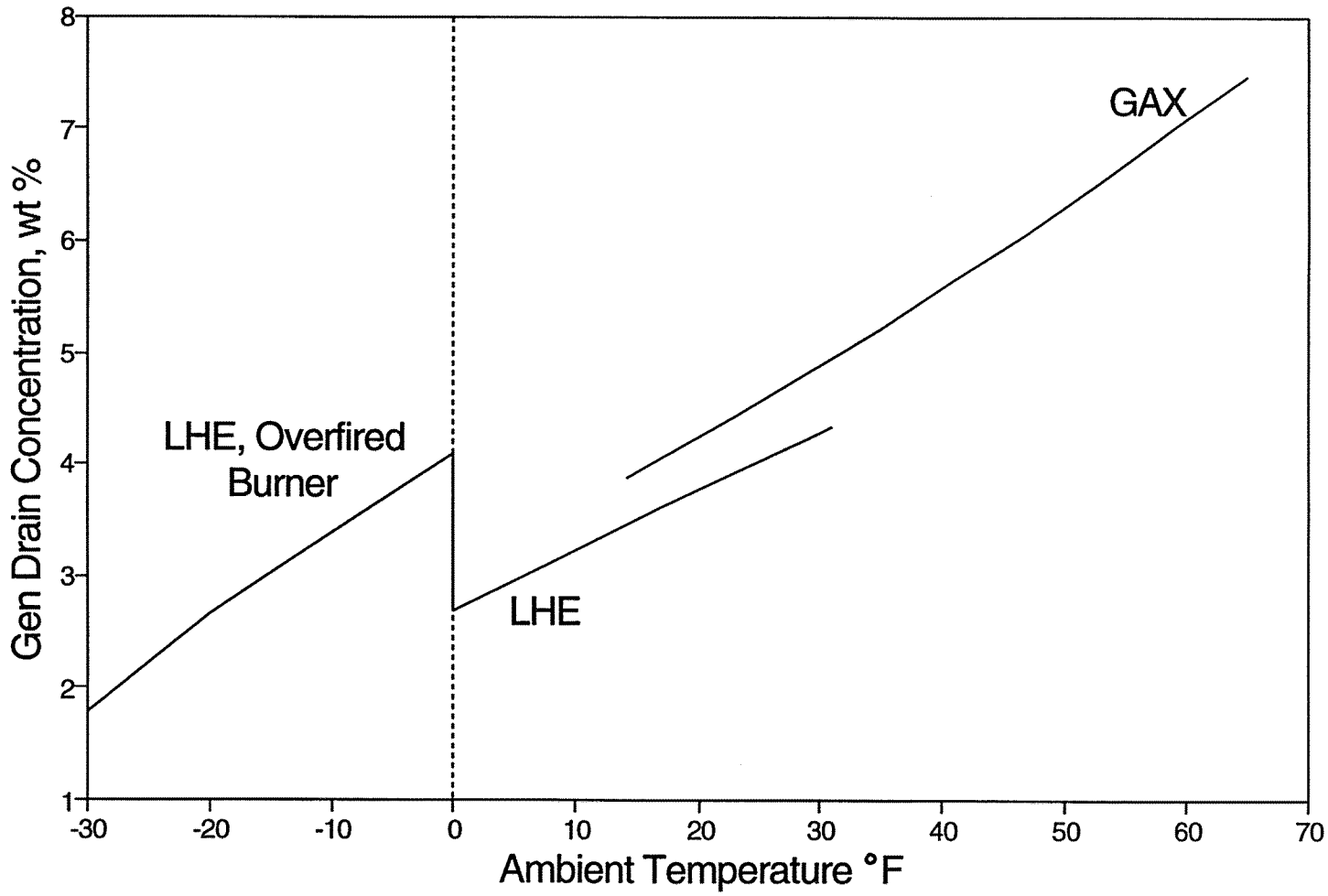

Figure 10. Generator solution exit concentration for LHE and GAX heat pumps

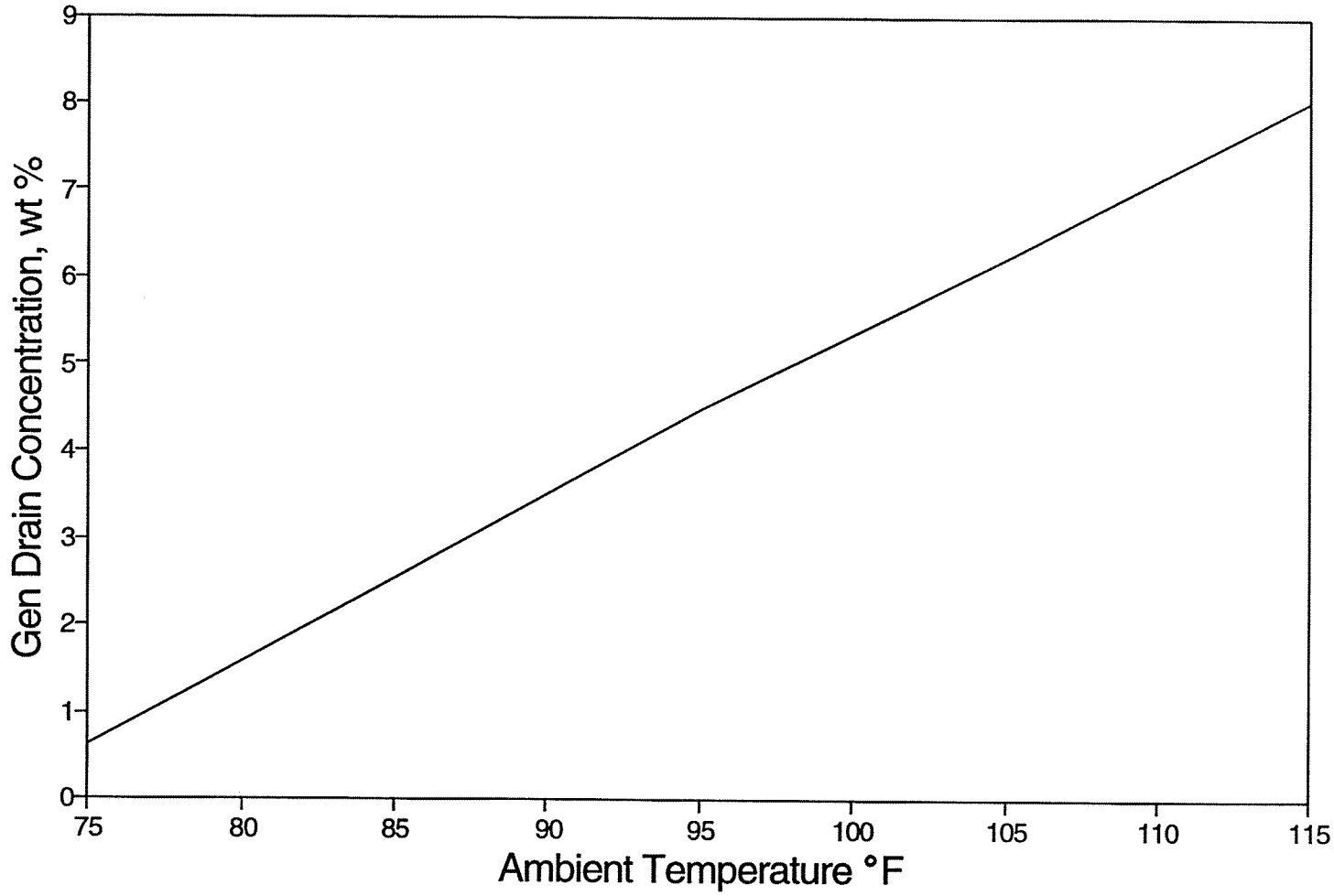

Figure 11. Generator solution exit concentration for a GAX air conditioner

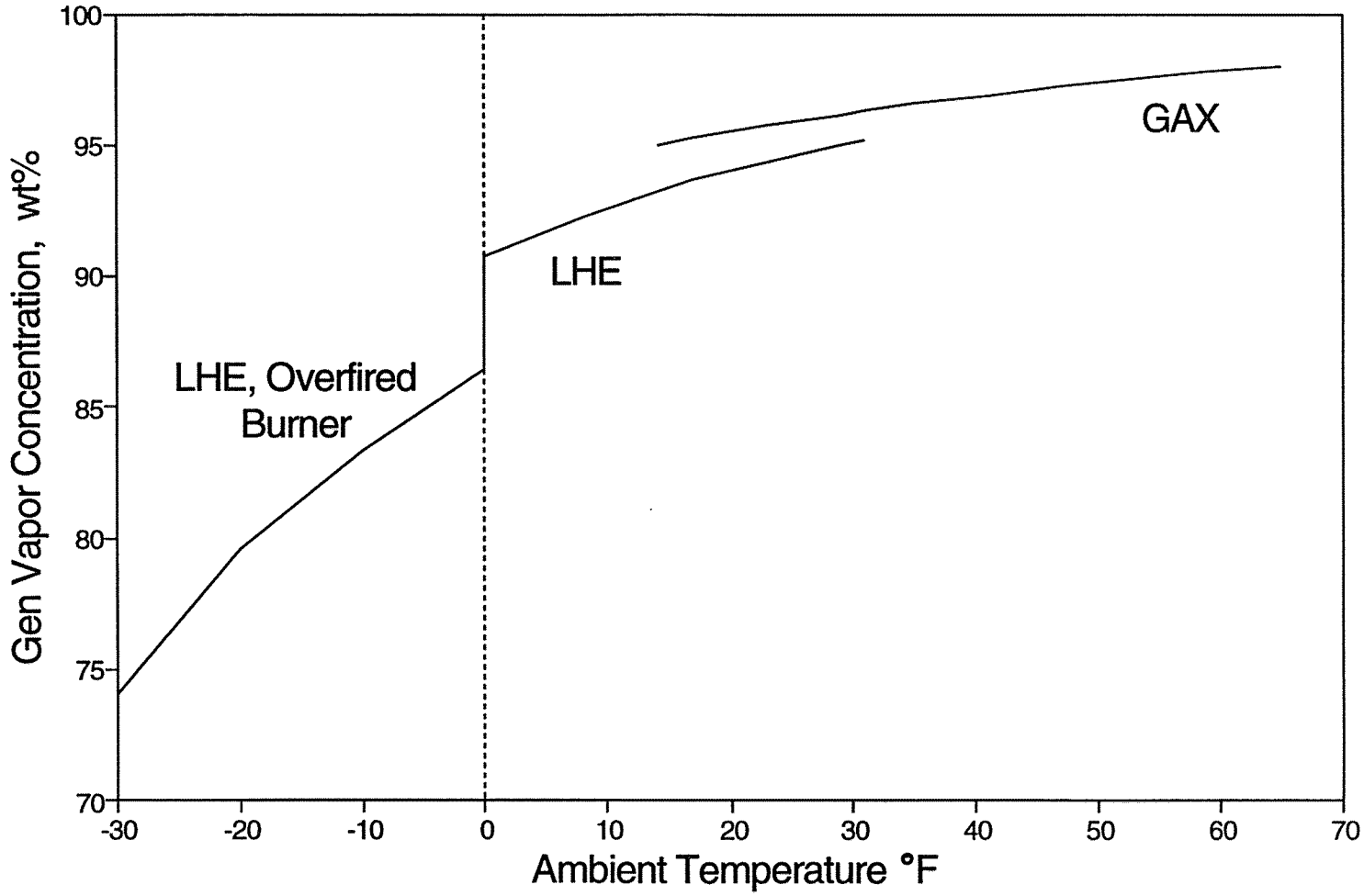

Figure 12. Generator exit vapor concentration for LHE and GAX heat pumps

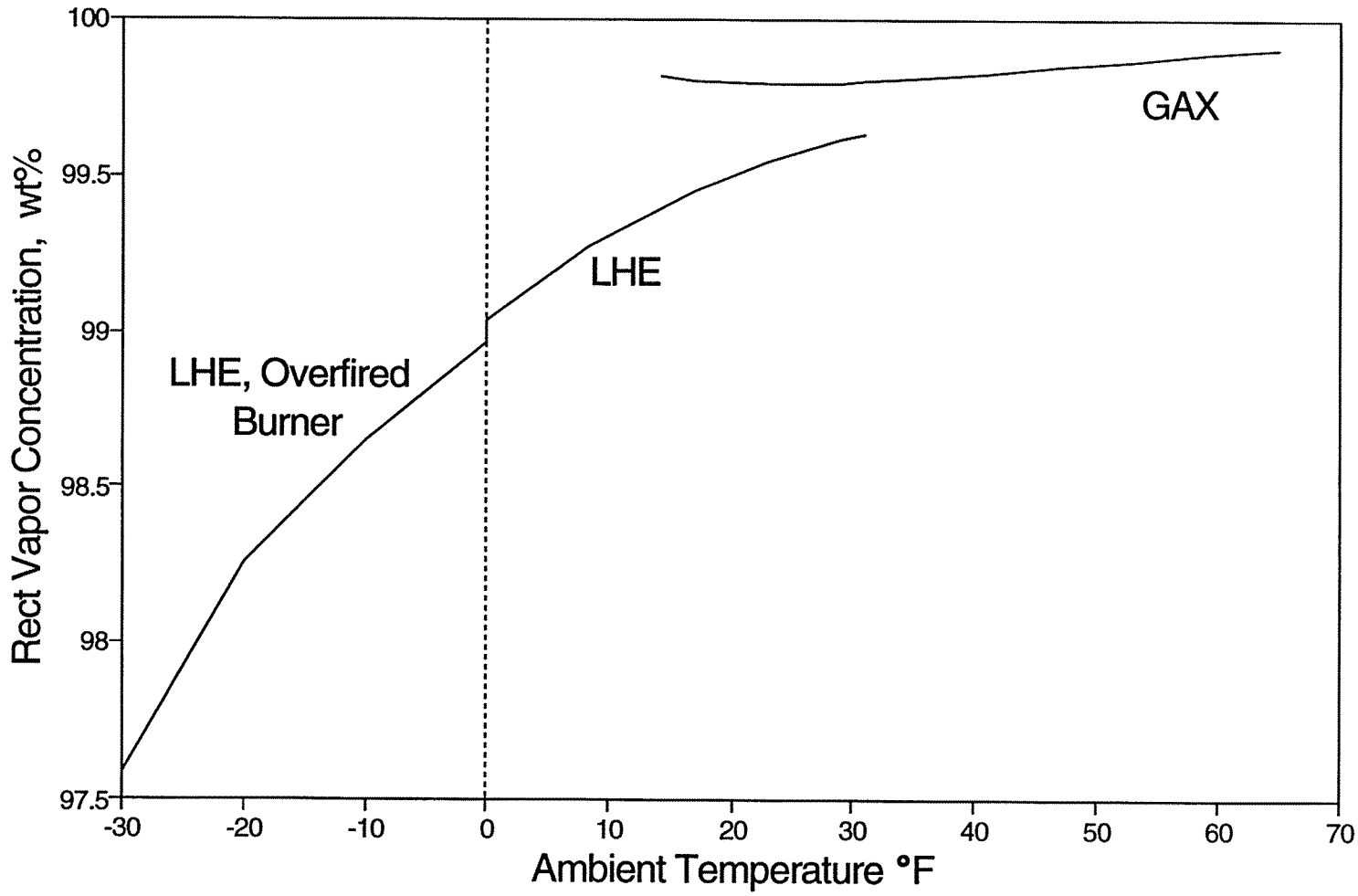

Figure 13. Rectifier exit vapor concentration for LHE and GAX heat pumps

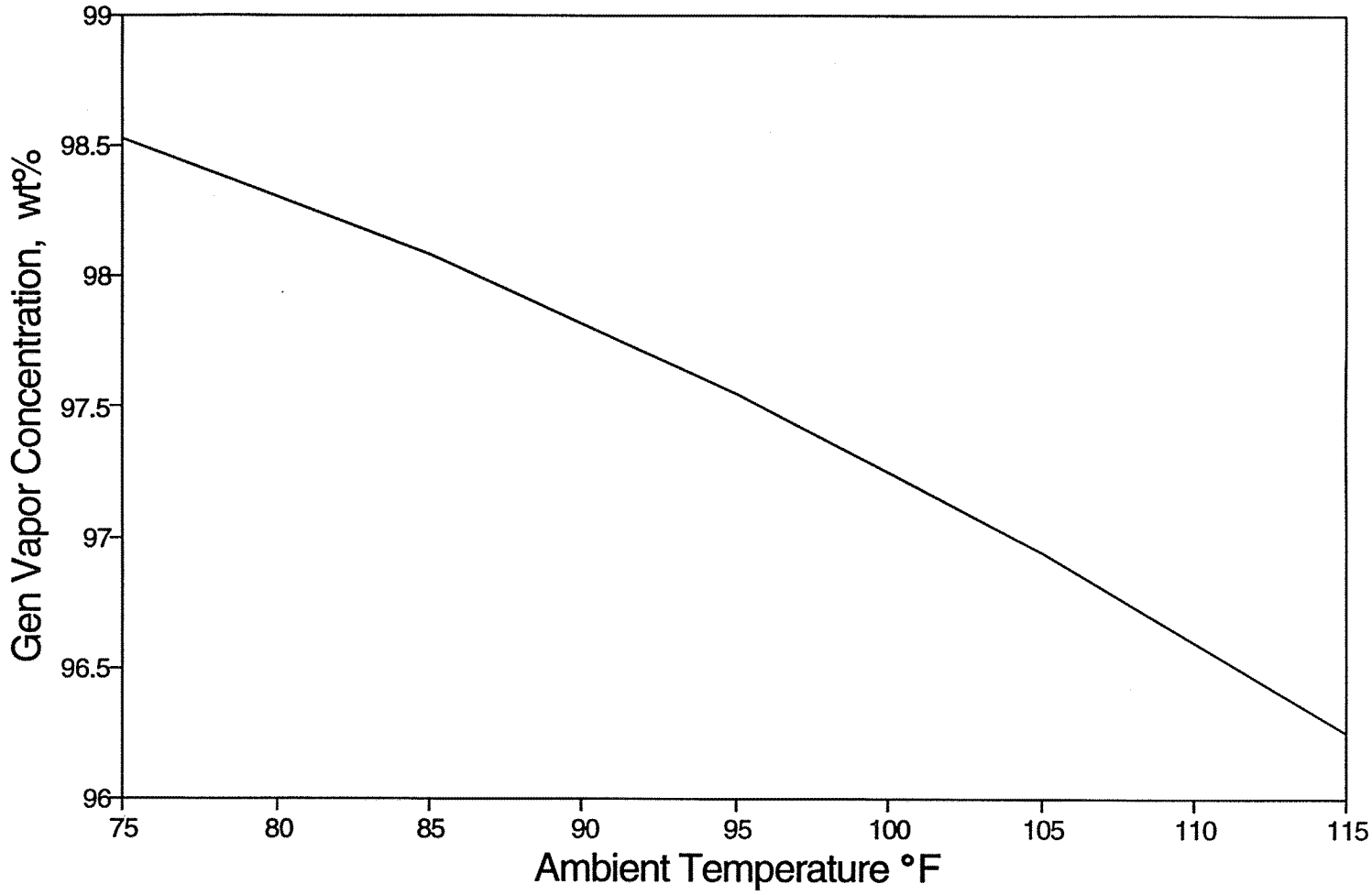

Figure 14. Generator exit vapor concentration for a GAX air conditioner

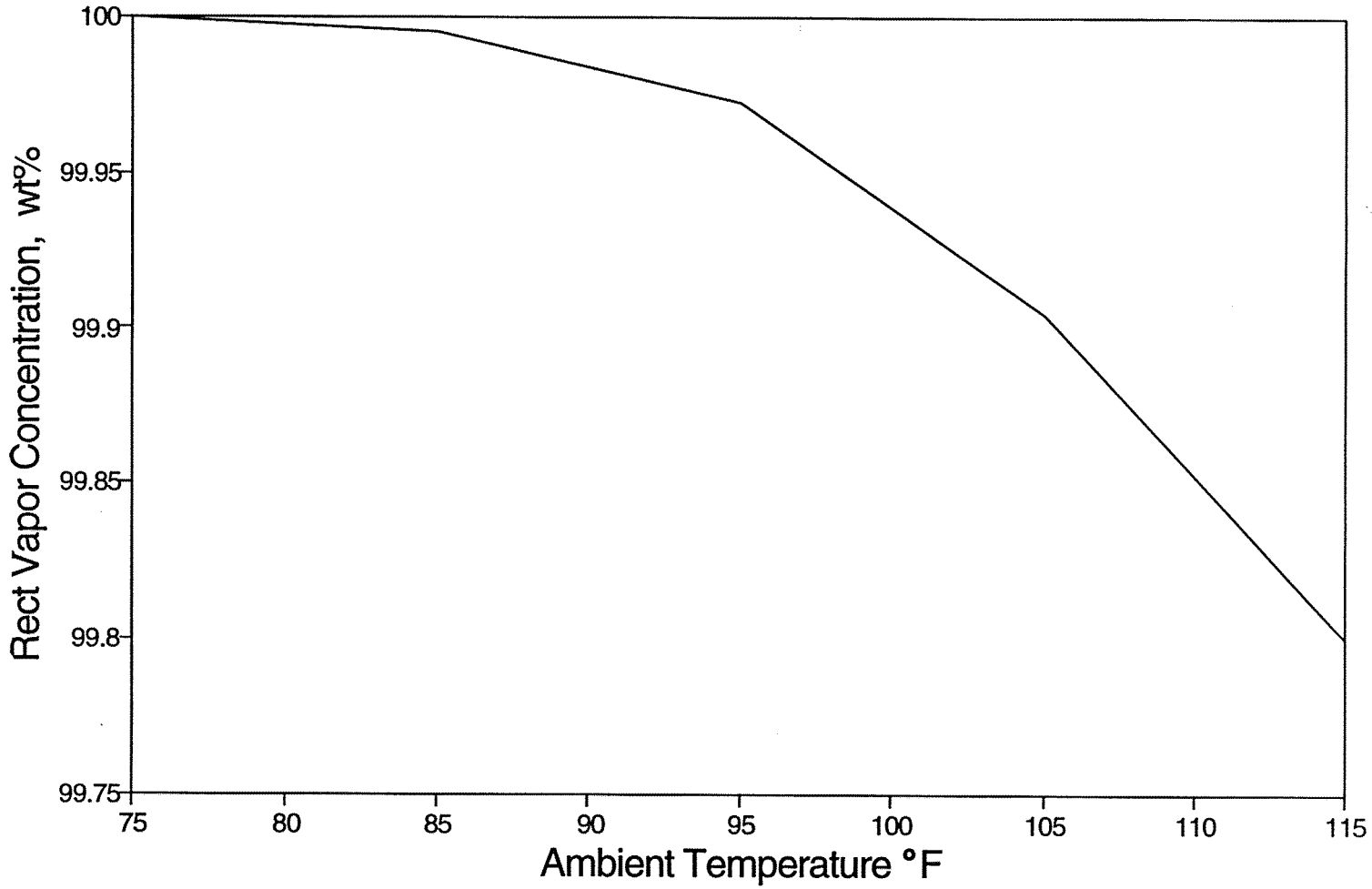

Figure 15. Rectifier exit vapor concentration for a GAX air conditioner

the LHE cycle must be used, the raw vapor concentration begins to fall off rapidly. This effect is even more pronounced below 0°F ambient, when the burner is being over-fired by 50 percent and the raw vapor drops to 74 percent ammonia at -30°F. This figure shows the need for more rectification as the ambient temperature drops. Two stages of rectification were evaluated as shown in Table 1. The smaller stage is adequate for heat pumping at ambient temperatures above 0°F. However, below 0°F both rectifier stages were needed to obtain an acceptable COP.

Figure 13 shows the effect of using the two-stage rectifier over the heat pumping operating range. Initially, it was expected that any rectified vapor concentration over 99.5 percent would give the best performance. However, the model results showed that a concentration of about 99.8 percent was very close to the optimum. Thus, the good performance of the heat pump when operating in the GAX mode is partly the result of excellent rectification.

When the LHE cycle is used at the lower ambient temperatures, the rectifier performance is no longer as adequate as at the higher temperatures. Even the use of 70 percent more rectification surface below 0°F cannot restore the high vapor concentration of the GAX mode. The use of larger and smaller rectifiers in all the heat pumping temperature ranges was evaluated. It was found that at -30°F a minimum UA of 4.2 was required, which gave adequate performance up to 0°F.

Between 0 and 65°F, the best single value for rectifier UA was 2.50. The model would not function with a smaller UA value at 0°F, and a larger value reduced the COP at 65°F significantly because the refrigerant purity and reflux flow rate increased.

Figure 14 shows the raw vapor concentration for the air conditioning mode. The variation in concentration is about the same as in the GAX heat pumping range, although the different scales for Figures 12 and 14 tend to obscure this. Despite the high vapor concentration and the small variation in raw vapor concentration, a larger rectifier UA was needed

for the air conditioning mode than for the GAX heat pumping mode. The optimum value turned out to be in the range of 3.4 to about 4.0. Any UA value in this range could be used to get comparable overall performance, even though the performance at any one temperature could be higher or lower.

This broad optimum suggested the use of a two stage rectifier, having the same pair of rectifier stages for both air conditioning and subzero heat pumping. A quick check of the COP curve for a rectifier UA of 3.4 showed that the optimum rectifier size might save about $5 of natural gas over a 1000-hour cooling season. This potential savings seemed a poor reason to consider a three-stage rectifier at this point. Figure 15 shows the ammonia concentration in the rectified vapor for the air conditioning mode. This figure shows the effect of using a two-stage rectifier.

Cycle Selection

One of the primary subtasks in the concept optimization task was to select a specific set of cycles for the heat pump to use over the full range of ambient temperature. The cycle choices were

- The basic GAX cycle, for air conditioning and warm ambient heat pumping.
- An Absorber Heat Exchanger (AHE) cycle, for intermediate temperature heat pumping.
- A Liquid Heat Exchanger (LHE) cycle, for low ambient temperature heat pumping.

Schematic diagrams for these cycles are shown in Figures 16 to 18; for the GAX, AHE, and LHE cases where the hydronic fluid is used for cooling the rectifier, these are the GH, AH, and LH cycles, respectively.

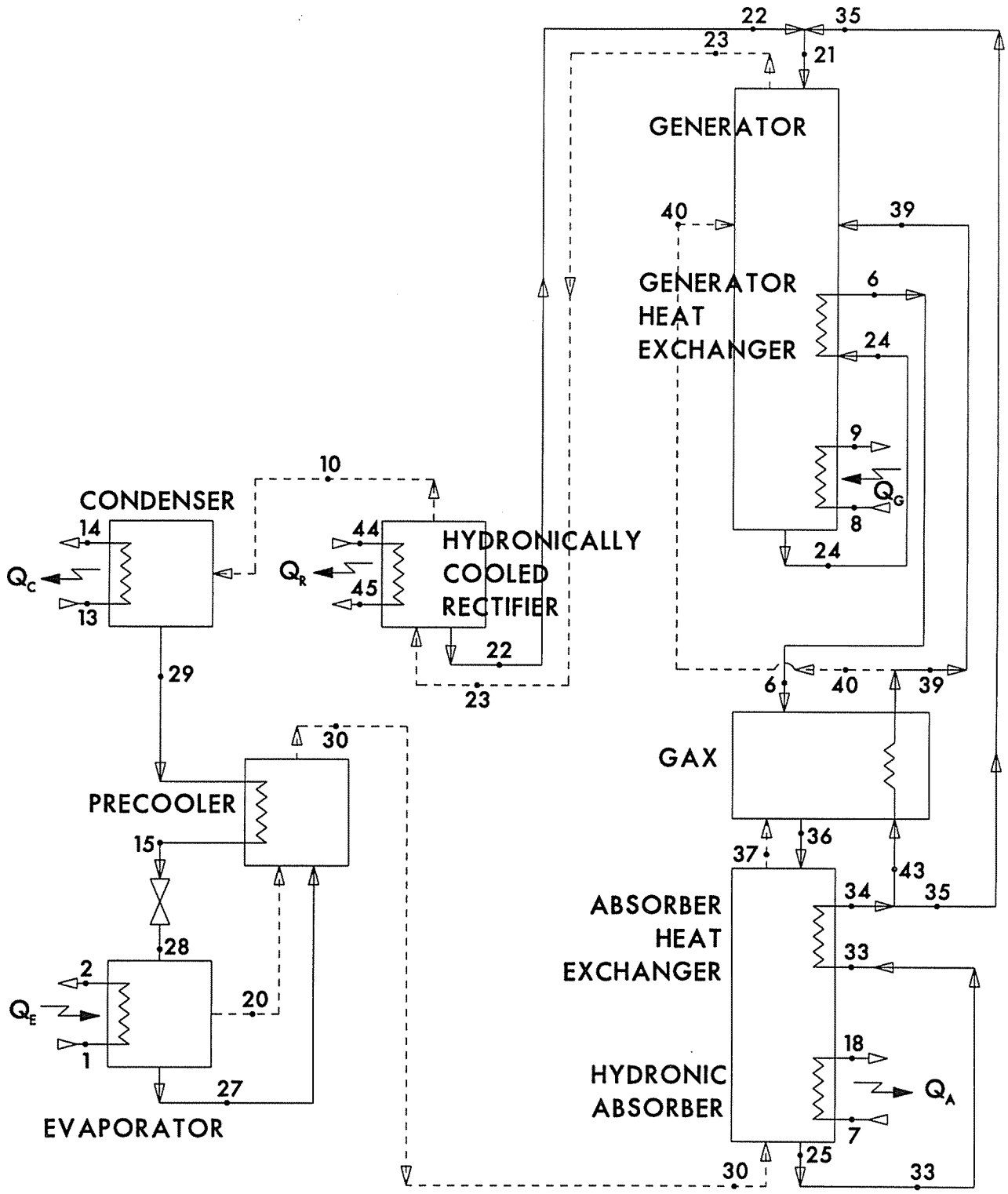

Figure 16. Cycle schematic diagram for the Generator Absorber Heat Exchange (GAX) cycle with a hydronically cooled rectifier (GH)

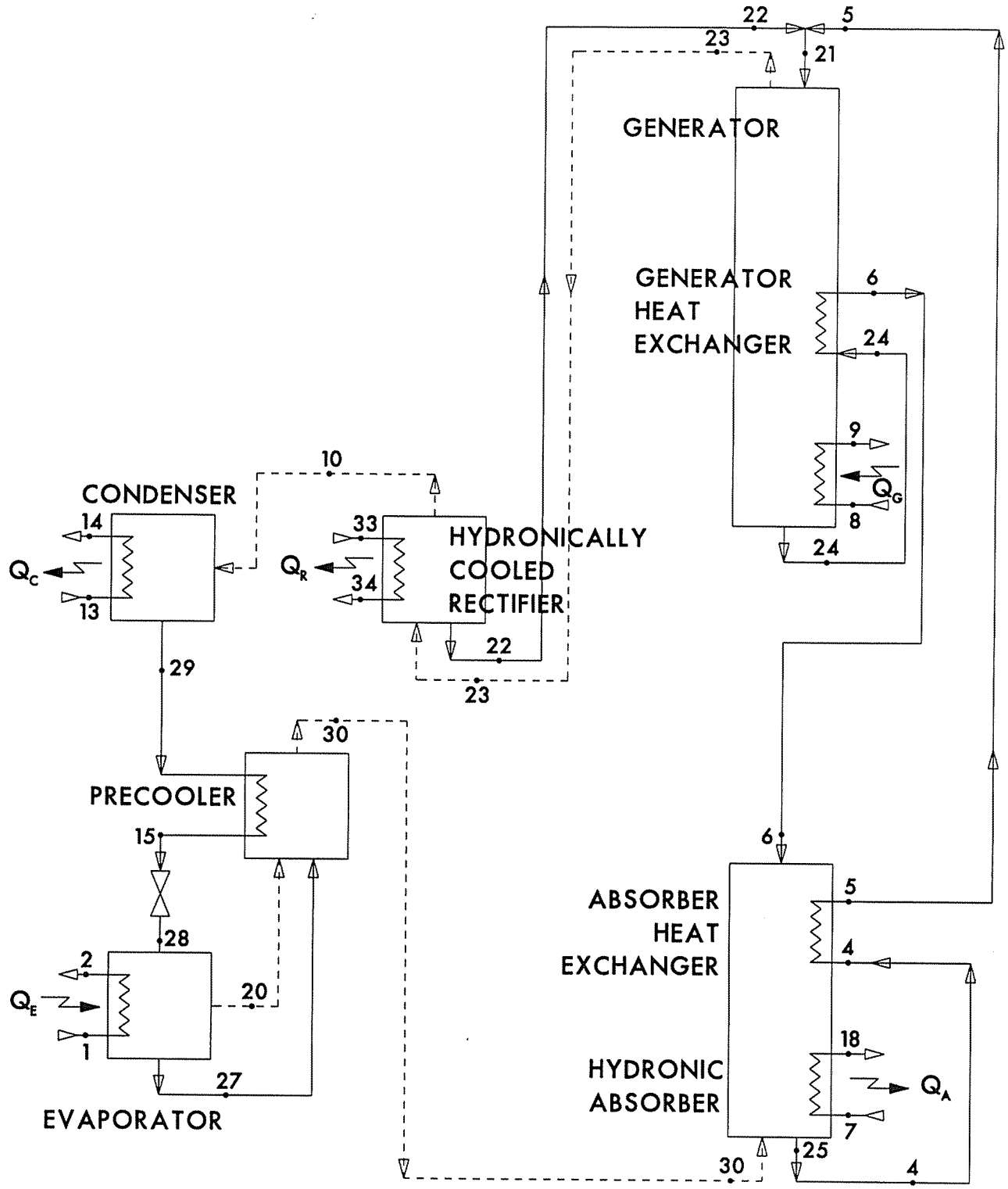

Figure 17. Cycle schematic diagram for the Absorber Heat Exchanger (AHE) cycle with a hydronically cooled rectifier (AH)

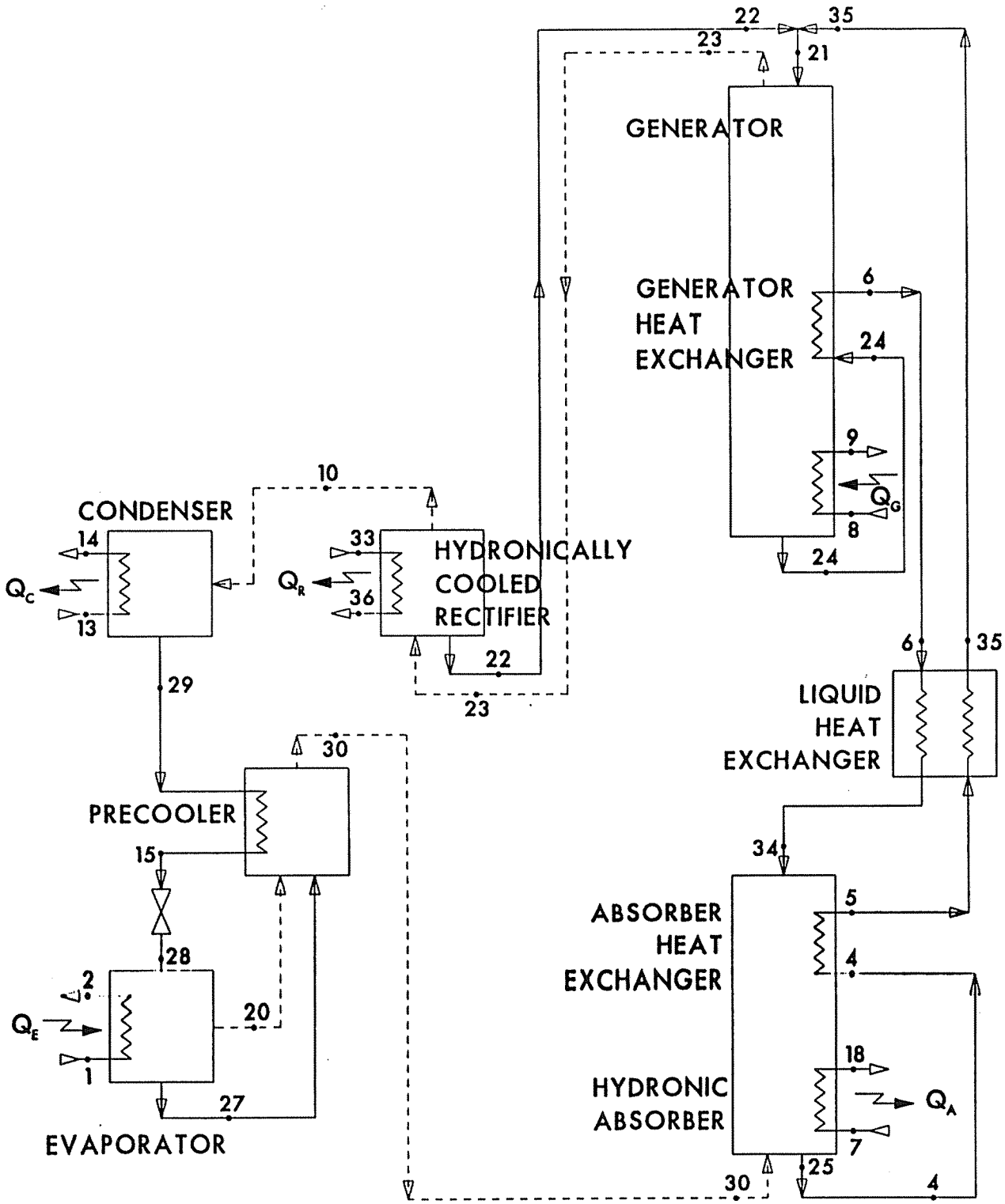

Figure 18. Cycle diagram for the Liquid Heat Exchanger (LHE) cycle with a hydronically cooled rectifier (LH)

The GAX cycle is the cycle of greatest interest because it provides the high COP that is the goal for the overall project. The schematic in Figure 16 shows the approach to using the GAX component to preheat and desorb a portion of the pumped (weak) solution. The ultimate heat source for this desorption process is the high temperature end of the absorption process.

As shown in the cycle schematic, separate heat exchangers are to be used in the absorber (AHE) and generator (GHE) for internal heat recovery.

The GAX cycle is limited to operation at ambients where there is a thermal overlap between part of the absorption process and part of the desorption process. Below some minimum ambient temperature the heat pump cannot operate efficiently in the GAX mode and the heat pump must change to another cycle.

The Absorber Heat Exchange (AHE) cycle is the simplest of the cycles we considered, and the one that is most used in practice. This cycle uses the AHE and GHE as its only internal heat recovery components.

The Liquid Heat Exchanger (LHE) cycle is one step more complex than the AHE cycle since it includes a liquid-to-liquid solution heat exchanger. This additional component allows this cycle to operate with the best COP of the three cycles at low ambient temperatures.

Analysis indicates that there is no ambient temperature at which the AHE cycle has a higher COP than the LHE cycle for the same size (overall UA) of common components. There is a range of ambient temperatures where the LHE cycle has a better COP than the GAX cycle. In this ambient temperature range, the LHE component in the cycle contributes in a small but positive way to improving the cycle COP. Without the LHE the cycle would be the AHE cycle and it would have a lower COP. There may be a very small range of ambient temperatures where the LHE contributes to improving the COP of the GAX cycle,

but this range is probably too small to be of practical interest.

One conclusion from the evaluation of the three basic cycles is that there is no need for a separate operating range for the AHE cycle; we need only use the GAX and LHE cycles to obtain better heating performance than a combination of a GAX and an AHE cycle.

Cycle Conversion. The changeover between the GAX and LHE cycles needs to take place in the overlap range of ambient temperatures. The width of this range allows for a reasonable "dead-band" in the controller, a favorable design feature. A novel and potentially patentable arrangement was defined to allow for a simple transition between the two heat pumping modes, valving the LHE in and out and simultaneously directing the preheated weak solution to the proper place in the generator. This valving arrangement also allows the use of the GAX component as an addition to the AHE at those times when the unit is not in the full GAX mode.

GAX Flow Split. The flow split of partially preheated weak solution is of particular importance in the heat pump design. The cycle COP improved with increased flow rate through the GAX. This was true for as much as 95 percent of the weak solution flow through the GAX, leaving only 5 percent of the flow to be directed to the top of the generator. Unless the flow to the generator was at least 20 percent of the total weak solution flow, poor performance resulted in the analyzer section of the generator. Thus, the maximum flow of weak solution to the GAX should be limited to 80 percent of the total weak solution flow. One aspect of the detailed design and testing of the GAX component will be identifying a control algorithm for the flow split control valve.

GAX Coupling. Three means for coupling the absorption and desorption processes in the GAX itself were considered. These are

- Direct heat exchange through one heat exchanger. This means, for example, absorption on the outside of a coiled tube with desorption in the inside of the tube.

- Hydronic coupling of two separate heat exchangers. This approach would use a dedicated, high temperature hydronic pump to flow water or a heat transfer fluid between the absorber and desorber heat exchangers.

- Heat pipe coupling of two separate heat exchangers. This approach requires the use of gravity-driven, not wicked, heat pipes. (A wicked heat pipe can reverse its heat flow and reduce the COP in cold ambient conditions. The use of a gravity-driven heat pipe means using an evaporator section at a low level and a condenser section at a higher level. The vapor can easily flow up to the condenser, and gravity returns the condensate to the evaporator. This approach requires that the two heat pipe sections be mounted one above the other. This geometry means that all the unfired parts of the generator must be above the top of the absorber. This arrangement will add to the overall unit height.

All three modes of coupling the GAX absorber and generator will work and can provide the same COP. However, the three modes have drastically different requirements for heat exchange surface area and probable component cost. With either the hydronic coupling or the heat pipe approach, the model shows a need for two heat exchangers with a UA of 40 to 60 BTU/min°F for each. The direct exchange mode requires only one exchanger with a UA of about 27 BTU/min°F, a considerable savings in heat exchanger size. Because of the smaller size heat exchanger, the direct heat exchange mode is preferred for the GAX. The indirect means of coupling the generator and absorber are judged to be inferior to the direct coupling approach.

Rectification. The choice of the best type of rectifier for the heat pump was difficult because all three types of rectifier appear able to give good performance.

The total condenser approach to rectification requires the use of a modulating valve and a potentially complex control algorithm. One can easily define the refrigerant flow rate that is needed for proper rectification at any ambient temperature. However, it is not clear what variables could be measured to provide the valve a command signal. This information may well become clear during the testing tasks. The total condenser approach eliminates the

need for a separate rectifier heat exchanger, a significant advantage. Its disadvantages are potential difficulty in wetting the packing given the relatively low flow rate of refluxed refrigerant and the difficulty of defining a command signal for the valve. The total condenser approach to rectification appears to be the least practical approach at this time. Because of its advantages this approach offers the potential for improving the cycle in the future. Therefore, the total condenser approach to rectification is recommended for consideration as a highly promising but longer-term concept.

The hydronically cooled and the solution-cooled rectifiers can deliver the same overall performance. A solution-cooled rectifier was used because of the need to make step changes in the rectification capacity of the cycle in response to ambient temperature changes. These step changes can be accomplished with two sets of rectifier coils and series solenoid valves. For service and reliability reasons it is better to have these additional valves in the hydronic circuit than in the solution circuit. Should there be a need to service these valves, it could be done without opening the sealed solution loop. Hence, the use of a hydronically cooled rectifier in the testing. The two rectifier sections are to be plumbed in parallel with the absorber in the hydronic loop. In this arrangement neither rectifier section needs to pass the full hydronic flow and thus, the rectifier coils can be made of relatively small diameter (0.25- or 0.375-inch) tubing.

Parasitic Power

One of the primary areas for concern in any hydronically coupled system is the pressure drop in the hydronic system. Even with the most efficient pumping system, the power consumption is directly related to the pressure drop in the hydronic system.

The shell-in-tube heat exchangers of the GAX unit will be designed with low entrance and exit losses for the hydronic fluid. Such a design is shown in Figure 19, the final design for the Dual Cycle ammonia condenser. The hydronic connections were configured so that the fluid entered and exited the shell tangentially, through slightly enlarged nozzles. This

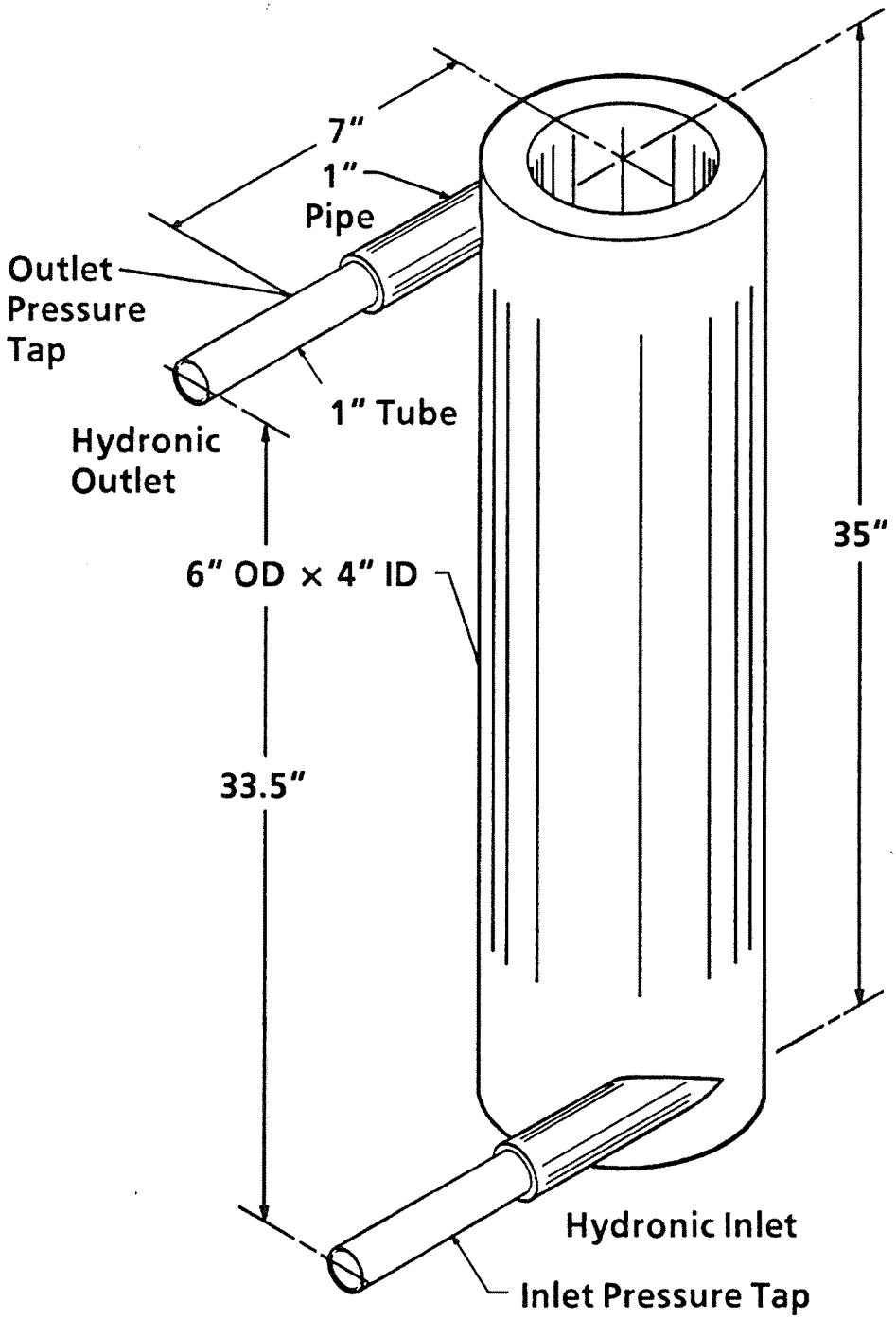

Figure 19. Dual Cycle ammonia condenser with low pressure drop inlet and outlet

was a significant improvement over the original design, shown in Figure 20. Test results for these two inlet and exit connection designs are shown in Figure 21. For 25 percent (by weight) calcium chloride at room temperature, the pressure drop was reduced from 1.25 psi to 0.25 psi. Clearly, improving the inlet and exit was a significant step in reducing the pressure drop. This type of connection will be used in the GAX tube-in-shell heat exchangers.

Dual Cycle had a nominal hydronic flow of 8 gpm, and the hydronic tubing internal to the unit was 0.875 inch. The hydronic piping between the unit and the indoor coil was 1.5-inch PVC pipe. For the GAX unit, with its increased hydronic flow rates of 12 to 14 gpm, we plan to use 1.25-inch internal tubing and 2-inch PVC pipe for the indoor coil connection.

To switch the hydronic flow paths for mode changes, a multiport spool-type valve was developed for Dual Cycle. Figure 22 shows the ten-port valve, with the 0.875-inch tubing connections. Hydronic pressure drop data are shown in Figure 23, with both water and 25 weight percent calcium chloride at room temperature. At 8 gpm, the valve had a 0.53 psi drop with water and a 0.65 psi drop with calcium chloride. It is planned to use this type of valve, with larger ports to accommodate the larger flow rate.

Other design variables affecting the hydronic pressure drop are the type of hydronic coupling to the outside air and the hydronic fluid. There are two types of outside air coupling. In the typical method, termed full hydronic coupling, the outside coil rejects heat from the absorber and condenser in A/C mode, and picks up heat for the evaporator in the heat pumping (HP) mode. Hydronic valves switch the hydronic fluid between these modes. Because the same fluid is in both loops, all the hydronic fluid cannot freeze at the lowest expected operating point (-35°F). This mode must use either 50 percent (by volume) ethylene glycol or 30 percent (by weight) calcium chloride. (In the balance of this discussion of hydronic fluids, the calcuim chloride concentrations are always weight percent and the ethylene glycol concentrations are always by volume.) 25 percent calcium chloride provides

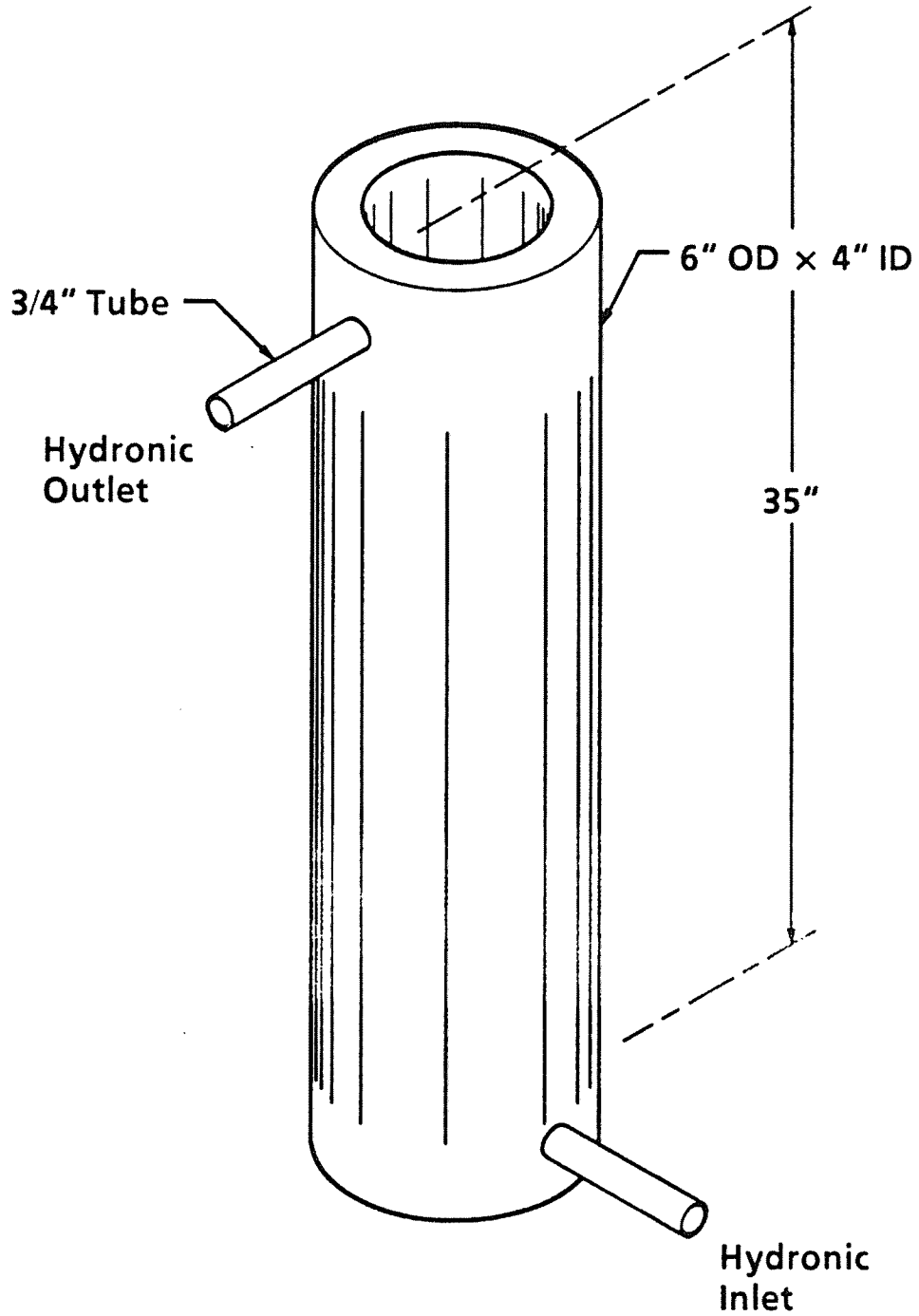

Figure 20. Dual Cycle ammonia condenser with original inlet and outlet

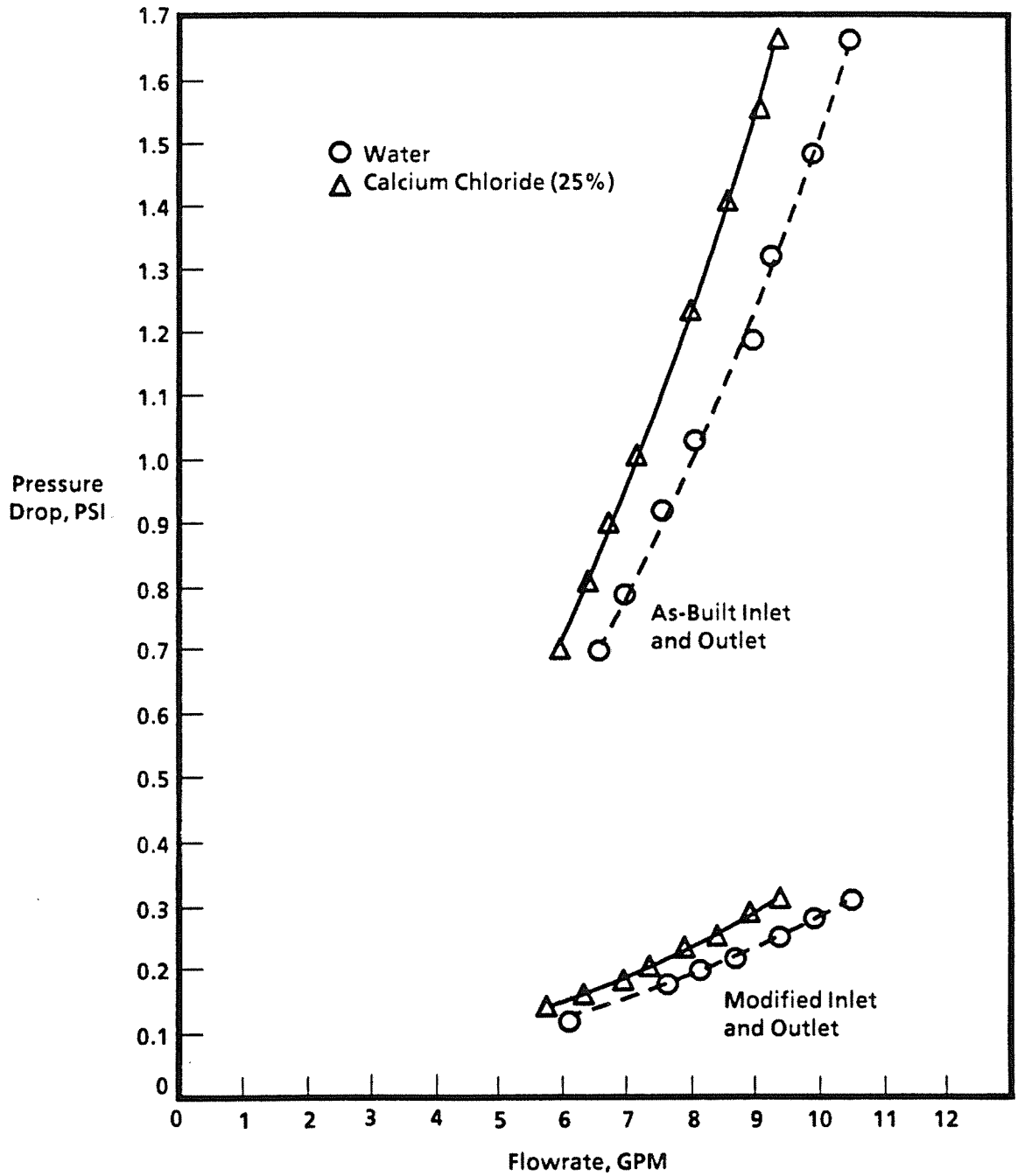

Figure 21. Pressure drop for original and improved Dual Cycle ammonia condenser as a function of hydronic flow rate

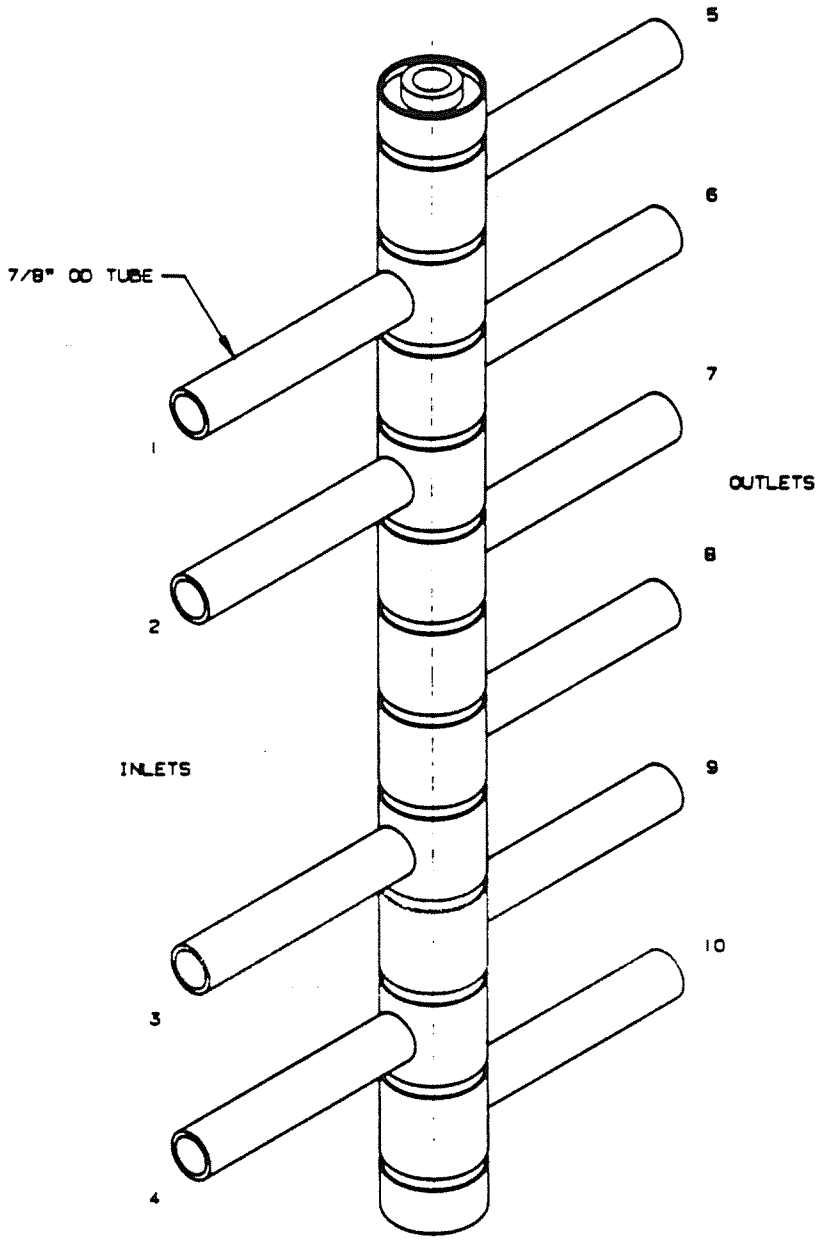

Figure 22. Dual Cycle hydronic valve

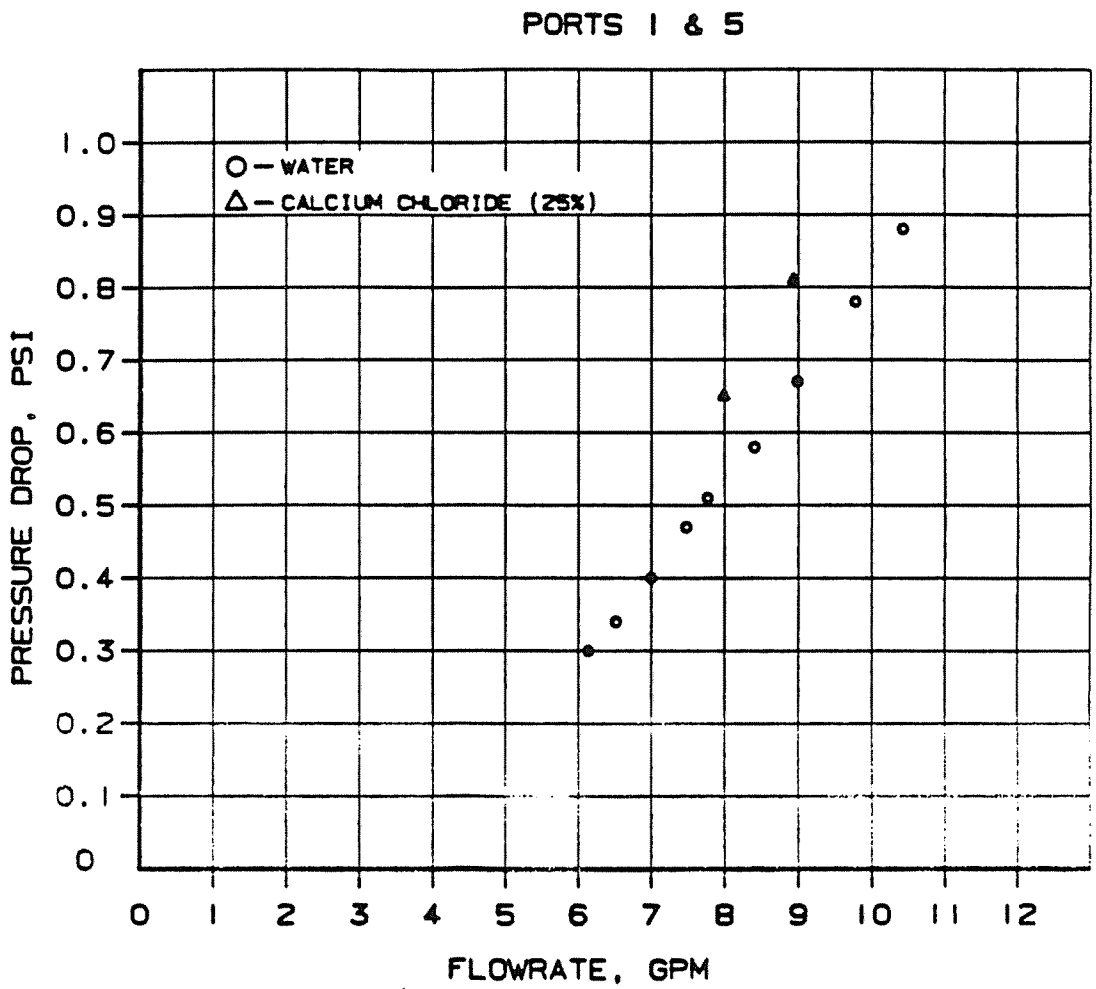

Figure 23. Dual Cycle hydronic valve pressure drop as a function of hydronic flow rate

freeze protection to -20°F. The pumping requirements for 50 percent ethylene glycol at -35°F preclude its use. However, when the outdoor coil is split in two parts, with a refrigerant-to-air heat exchanger for the condenser (A/C mode) or evaporator (HP mode) and a hydronic fluid-to-air heat exchanger for the absorber (A/C mode only), the outdoor hydronic loop must be protected only from bursting, not freezing. This method is called partial hydronic coupling. Using 30 percent ethylene glycol, with a freeze point of 7°F, provides burst protection to -60°F. This fluid provides some reduction of the pressure drop in A/C mode (3.4 psi indoor drop versus 5.3 psi for 30 percent calcium chloride), and the drop reduction for extremely cold ambient heat pumping is extremely high.

Table 12 shows the pressure drops for three fluids (25 percent and 30 percent calcium chloride, and 30 percent ethylene glycol) for one A/C operating point and five heat pumping points, from 47°F to -27°F ambients. The 25 percent calcium chloride case is for reference only, as it freezes at -20°F. These results indicate that for the reduction of hydronic-based parasitic power consumption, the preferred configuration is the partial hydronic coupling, with 30 percent ethylene glycol as the hydronic fluid. In A/C mode with partial hydronic coupling, the indoor pressure drop is 2.9 psi, versus 5.3 psi for the full hydronic coupling and 30 percent calcium chloride. With partial hydronic coupling, the outdoor loop flow rate is about one-third of that for full hydronic coupling because only the absorber heat is hydronically rejected. The condenser is directly air-cooled. This lower flow rate combined with the lower viscosity of the glycol result in a outdoor loop pressure drop of less than 1 psi, while the fully coupled loop's pressure drop is 7.2 psi. The combined indoor and outdoor loop pressure drop for the partial hydronic coupling method is 3.7 psi, and 12.5 psi for the fully coupled system. This result is even more dramatic for heat pumping at -27°F ambient. While the partially coupled outdoor loop pressure drop is zero, as this loop is off for heat pumping, the fully coupled outdoor loop pressure drop is 10.9 psi. The combined indoor and outdoor loop drop for the partially coupled system for this ambient is 3.4 psi, and the total drop for the fully coupled system is 16.2 psi.

Table 12. Estimated Hydronic Pressure Drop for 5RT Unit

		Indoor loop drop (PSI)	Outdoor loop drop (PSI)
A/C Mode 95°F	25%CC, FH[1] 30%CC, FH 30%EG, PH	4.7 (@50°F) 5.3 2.9	5.9 (@110°F) 7.2 0.8
HP Mode 47°F	25%CC, FH 30%CC, FH 30%EG, PH	4.8 (@110°F) 5.8 3.2	6.4 (@41°F) 7.1 loop off[2]
HP Mode 17°F	25%CC, FH 30%CC, FH 30%EG, PH	4.8 (@110°F) 5.8 3.2	7.4 (@11°F) 8.3 loop off
HP Mode -7°F	25%CC, FH 30%CC, FH 30%EG, PH	5.0 (@100°F) 5.8 3.4	8.4 (@-13°F) 9.7 loop off
HP Mode -20°F	25%CC, FH 30%CC, FH 30%EG, PH	— (@100°F) 5.8 3.4	— (@-25°F) 10.4 loop off
HP Mode -25°F	25%CC, FH 30%CC, FH 30%EG, PH	— (@100°F) 5.8 3.4	— (@-33°F) 10.9 loop off

(1) 25%CC, FH = 25%, by wt. calcium chloride solution, full hydronic coupling
30%CC, FH = 30%, by wt. calcium chloride solution, full hydronic coupling
30%EG, PH = 30%, by vol. ethylene glycol solution, partial hydronic coupling.

(2) Partial hydronic coupling has outdoor loop off in heat pumping mode.

Table 13 shows the estimated pumping power for the two hydronic coupling methods, full and partial, and their respective fluids, 30 percent calcium chloride and 30 percent ethylene glycol. These estimates assume a hydronic pump efficiency of 15 percent, typical of small hydronic pumps. The pumping power for each case is shown for three ambient temperatures: 95°F (air conditioning mode), 47°F and -20°F (heat pumping mode). For full hydronic coupling, the pumping power will be 505 watts for the A/C mode and 650 watts for heat pumping at -20°F. For partial hydronic coupling, the pumping power will be 115 watts for A/C mode and 120 watts for heat pumping at -20°F.

Table 14 shows the estimated electrical power for the hydronic pump, the solution pump, and the outdoor and burner fans in heat pumping and air conditioning modes. The solution pump and burner fan estimates are based on data collected for the Dual Cycle project. The solution pump power at -20°F reflects the increased power consumption of high speed operation. The partial hydronic coupling uses two fans, one for the ammonia/air coil and one for the hydronic fluid/air coil (which is off for heat pumping). The amount of air moved with the partial coupling system in A/C mode must be moved for both A/C and heat pumping modes with the fully coupled system. Therefore, the outdoor fan power for A/C for the partial coupling is greater than that for the fully coupled because of the inefficiencies of two fan motors. However, for heat pumping with the partial coupling, the outdoor fan power is only 250 watts, as only one fan is running. The partial coupling uses 25 percent less electricity for air conditioning and 50 percent less for heat pumping. These results indicate that, based on parasitic power consumption, partial hydronic coupling is preferred.

Table 13. Estimated Hydronic Loop Pumping Power

	Full Hydronic Coupling		Partial Hydronic Coupling	
Ambient Temperature/mode	**Indoor Loop**	**Outdoor Loop**	**Indoor Loop**	**Outdoor Loop**
95°F, Air conditioning	210 watts	295 watts	100 watts	15 watts
47°F, Heat pumping	230	290	115	0
-20°F, Heat pumping	230	420	120	0

Note: Assumes a hydronic pump efficiency of 15 percent.

Table 14. Estimated Power Consumption (Outdoor Unit Only)

	Full Hydronic Coupling (Heat Pumping @ -20°F)	**Full Hydronic Coupling (A/C @ 95°F)**	**Partial Hydronic Coupling (Heat Pumping @ -20°F)**	**Partial Hydronic Coupling (A/C @ 95°F)**
Hydronic pump	650 watts	505 watts	120 watts	115 watts
Solution pump	375	300	375	300
Outdoor fan	400	400	250	500
Burner fan	35	35	35	35
	1460 watts	**1240 watts**	**780 watts**	**950 watts**

Task 2. Absorber Development

Objective

The objective of this task was to conduct the actual development of the complete absorber for a GAX cycle. This task included five subtasks on component final design, test loop design, component fabrication, test loop setup, and component testing and improvement. The goal was to develop an effective absorber that could be used later in a complete system prototype.

Approach

The results of Task 1 were the basis for the efforts in this subtask. Three types of heat output absorbers were considered: air-cooled, in-tube absorbers; hydronically cooled, in-tube absorbers; and hydronically cooled, falling-film absorbers. The design of each of these types of absorbers along with the design of absorbers for solution preheating (the absorber heat exchanger or AHE) and for vapor generation, i.e., the generator absorber heat exchanger (GAX) were considered. The goal was to design an absorber that is capable of a close approach to equilibrium, without having a large size or excessive pressure drops on either side.

Subtask 2.1 Component Design

Objective

The objective of this subtask was to design an absorber for use in a residential- or light commercial-sized GAX heat pump. The absorber is required to provide both high- and low-temperature heat recovery within the heat pump cycle and heat output from the cycle.

The cycle analyses and optimization conducted in Task 1 of this project showed the need for a three-section absorber consisting of

- A Generator/Absorber Heat Exchanger (GAX) Absorber, to generate refrigerant vapor outside the fired generator.
- An Absorber Heat Exchanger (AHE), to recover low-temperature cycle heat and provide it to the solutions being fed to the GAX and the fired generator.
- A heat output Absorber, to provide one of the required heat outputs from the cycle.

Design Requirements

As documented in the Task 1 Report for this project, three separate modes of operation were analyzed to predict the performance of a GAX heat pump over a wide range of ambient temperature. The three modes of operation were

1. GAX mode of operation, air conditioning duty.
2. GAX mode of operation, heat pumping duty (outdoor temperatures above about 20°F).
3. LHE (Liquid Heat Exchanger) mode of operation, heat pumping (outdoor temperatures below 20°F).

The control system and the heating/cooling switch on the thermostat will determine which operating mode is active for the system at any given time. The control system was defined so that in ambient temperatures below about 20°F a liquid solution to solution heat exchanger becomes active in the cycle and the GAX absorber is allowed to function as an addition to the AHE. In addition, at ambient temperatures below 0°F, the control system increases the burner firing rate and the solution pump speed by 50 percent to provide additional heating capacity.

These three modes of operation were analyzed to determine the performance and state point conditions for typical heating and cooling loads over the ambient temperature range from -30°F to 115°F. For these analyses the component UA values, the fluid flow rates, the indoor air temperatures, and the firing rate were fixed and the thermodynamic COP and the state point conditions were the dependent variables. The smallest UA values that gave acceptable system performance were selected as the "design requirement" for each component in the system.

Additional design requirement information was provided by the complete set of system state point data for the nominal rating points of 95°F, 47°F, and 17°F and the additional point of -17°F. The results of these analyses are summarized in Figure 24. This figure shows the input and output conditions for each absorber in the form of a matrix which relates the ambient temperature to the stream temperature (F), the concentration (X), and the flow rate (#) in pounds/min. Also shown on the figure are the high and low side system pressures (psia) as a function of ambient temperature.

In addition to the thermodynamic states shown in Figure 24, the total heat transfer rate (Btu/min), log mean temperature difference (LMTD), and UA for each absorber were established. These values are summarized in Table 14. It should be noted that only two conditions (+95°F and +47°F) are shown for the GAX absorber, since at the two lower temperatures (+17°F and -17°F), the GAX absorber is used as an additional absorber heat exchanger (AHE). The model outputs show the combined GAX absorber and AHE as the AHE at the two lower temperatures.

Absorber Designs

GAX Absorber. The preferred GAX absorber design is based on the requirements discussed above, which establish the thermodynamic conditions for this heat exchanger. As the Table 15 summary shows, the total heat transfer rate, LMTD, and UA have been established. From these values a suitable absorber was designed, consisting of a helical coil

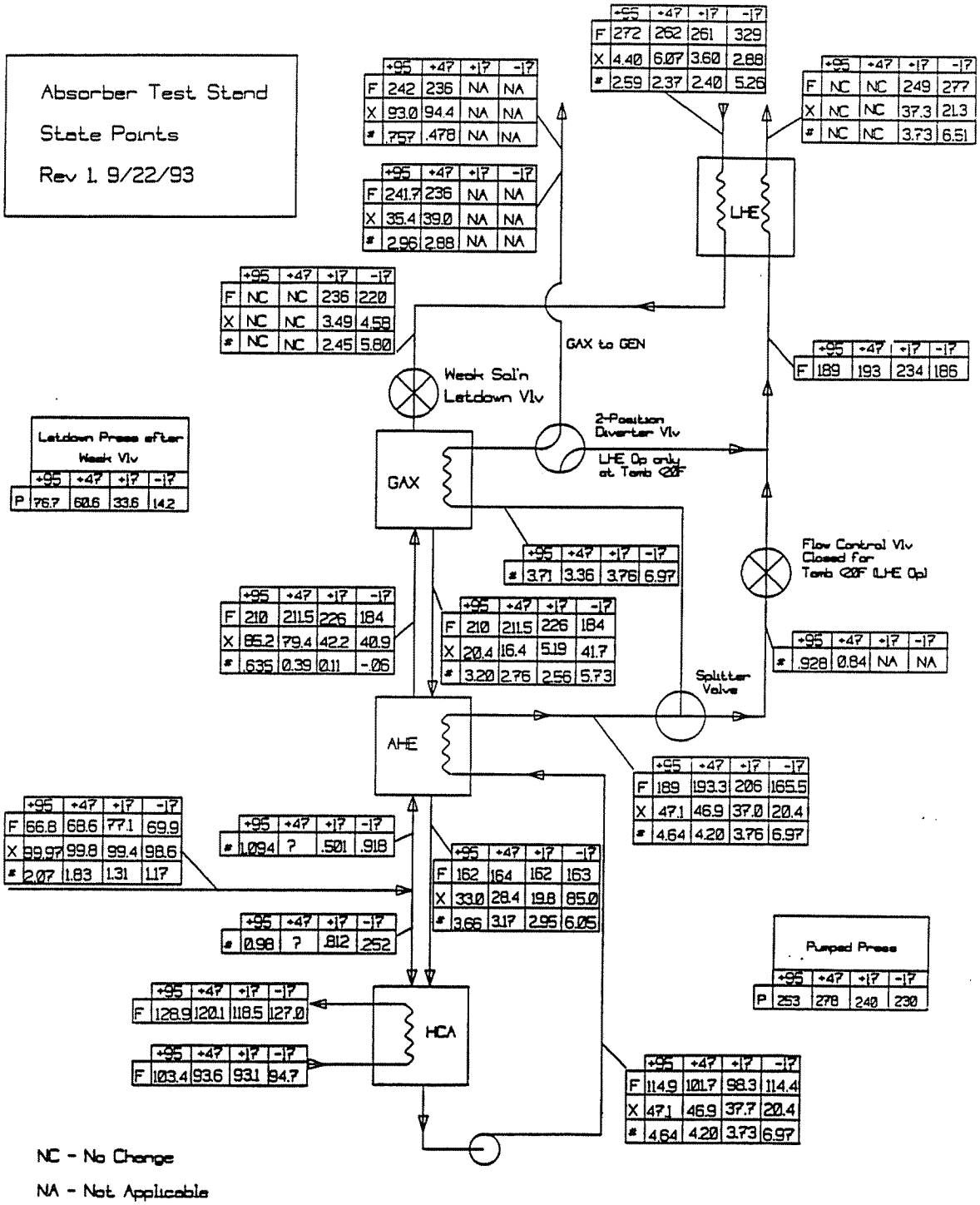

Figure 24. Absorber state points

Table 15. Design Requirements by Operating Mode

Component	Mode	Q (BTU/min)	LMTD (°F)	UA (BTU/min-°F)
GAX	+95	653	26.6	24.5
	+47	441	20.8	21.2
AHE	+95	412	33.9	12
	+47	430	35.8	
	+17	560*	*	33.5*
	-17	602*	*	
HCA	+95	826	20.3	38.9
	+47	826	21.2	
	+17	791	20.4	
	-17	1026	26.4	

* GAX runs as a solution HX (with the AHE) for ambients < 20°F.

with a vertical axis in a cylindrical containment vessel. The absorption process takes place in a falling film of solution on the outside of the tube coil and the vapor generation process occurs on the inside of the tube. The generator pressure can easily be contained by the absorber tube, given a reasonable wall thickness. Reasonable sizes for heat exchanger height and coiling diameter for the heat exchanger tubes were also included as design criteria.

Design Alternatives. There are only a limited number of design alternatives for the GAX absorber in the type of GAX cycle being considered in this project. In Task 1, cycle alternatives which would have led to other designs for the GAX absorber were considered. Specifically, these cycles would have used either a hydronic loop or a type of heat pipe to couple the generator and absorber. For these cycles, the GAX absorber would have consisted of a coiled heat exchanger with the absorption process on the outside of the coil

and the hydronic fluid or heat pipe fluid on the inside of the tube, with a cylindrical shell for solution and vapor containment.

For the direct type of GAX cycle chosen in Task 1, the design choices are between which process, absorption or desorption, is to take place inside the tube coil. The primary reason for choosing to have the absorption process take place on the shell side of the absorber coil has to do with vapor movement in the absorber. For thermodynamic reasons it is preferable to have the solution and the vapor moving in counterflow directions. Thus, the lowest temperature vapor is in contact with the lowest temperature solution and the highest temperature solution and vapor are also in contact. This flow situation can be arranged on the outside of a tube coil by having the solution flow by gravity from the top of the coil to the bottom and by introducing the vapor flow to the bottom of the absorber shell. If counterflow of the solution and vapor is to be arranged inside the tube, there is the potential problem of one flow impeding the other within the confines of the tube. Thus, all previous practical in-tube absorbers have been of the parallel flow type. For lower temperature absorption processes, such as in an AHE cycle, a parallel flow absorber may be acceptable. However, in a GAX cycle it is important to obtain the maximum possible absorber temperature and the counterflow of solution and vapor is needed for attaining this goal.

The choice of having the generation, or desorption, process inside the tube may minimize the operating pressure containment requirement on the GAX absorber shell, but the absorber pressure during storage on a hot day may approach the operating pressure of the generator. Hence there may not be much of an advantage for either alternative from the viewpoint of minimizing shell thickness and weight.

The choice of a coil for the heat exchanger tube, rather than a bundle of tubes, common in large tonnage chillers, is based on the desire to minimize the number of tube-to-shell joints that must be made and kept leak-tight. In large tonnage chillers, the length of absorber tubing required precludes this type of construction, as do the height requirements and the volume of the solution flow.

Design Considerations. The heat transfer coefficient on the inside of the tube was estimated at 1000 Btu/hr-ft^2-F based on conservative estimates of two-phase heat transfer of ammonia inside the tube. Since the heat transfer coefficient on the outside of the tube is expected to be ~230 Btu/hr-ft^2-F, the outside heat transfer resistance for absorption is the controlling resistance. Therefore, variation in the actual inside coefficient should have minimum effect on the overall heat transfer rate. Table 16 shows the major design parameters for the GAX absorber. The value of the outside tube coefficient (estimated at ~230 Btu/hr-ft^2-F) is the key parameter to be measured and confirmed during laboratory testing.

Table 16. GAX Absorber Design Parameters

Q (BTU/hr)	39,000
LMTD (°F)	26.6
UA (BTU/h-°F)	1470 (24.5 BTU/min-°F)
A (ft^2)	6.4
U (BTU/h-ft^2-°F)	≈230
h_i (BTU/h-ft^2-°F)	1,000
h_o (BTU/h-ft$_2$-°F)	300
D (coil), (in)	4.44
H_t (coil), (in)	~20
m-in (#/min)	2.5
m cooling, (#/min)	3.7
D_t (in)	0.625
L (ft)	40
n turns	34

The critical design criterion is mass transfer and not heat transfer for this component. Sufficient surface area, optimum gap space between the coil and shells, sufficient time for mass exchange, and adequate packing are important parameters in the design to accomplish the mass transfer needed. To minimize the heat loss to the surroundings through the outer shell (and thus improve the absorption rate) a thermal shield has been included in the design. This shield consists of a 0.2-in air gap surrounding the outer shell to increase the heat transfer resistance to the ambient. Figure 25 shows the drawing of the GAX absorber that meets the design goals. The absorber shown in this drawing has been specifically designed for laboratory testing. Hence, large flanges, sight ports, and thermocouple penetrations have been included. The final prototype version will not have this additional hardware.

An additional design concern is the wetting of the tube coil, due to the low solution flow rate into the GAX absorber. The variable of interest is the volume flow rate of solution per unit perimeter of the absorber coil. Given the absorber design and the required solution flow rate, there was concern with this issue, since the design resulted in a flow rate per unit perimeter that was lower than that of the ARKLA AHE design. Wetting tests were conducted using water and 3 percent ammonia/water solution at the design flow rate over a short section of absorber coil. Adequate wetting was obtained when the coil had been cleaned and oxidized and when the spacing between the solution drippers approximated that used in the ARKLA design.

AHE Absorber. A falling-film type absorber also was chosen for the AHE. The falling-film AHE absorber design is based on experience with a previous absorber of this type in an ammonia/water cycle and with the ARKLA solution cooled absorber (SCA). The design requirements defined by the GAX cycle models were used to resize these known absorber designs for GAX cycle application. Significantly more information is available on this type of heat exchanger compared to the GAX absorber because of the working experience with the two previously used absorbers. For instance, sufficient information exists on the physical size of the ARKLA SCA vs heat transfer capacity, flow rate, and LMTD. The AHE design is therefore partially based on ARKLA operating test data.

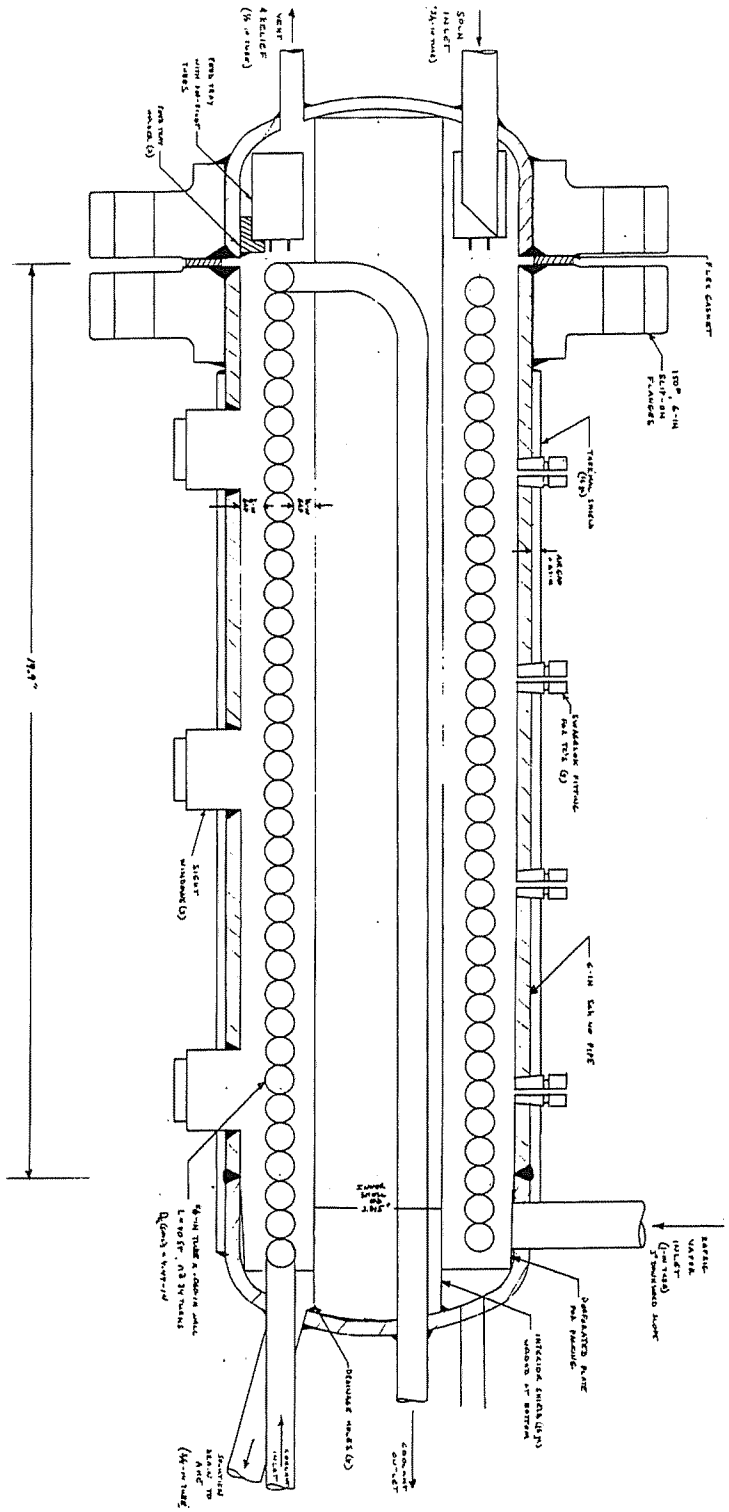

Figure 25. GAX absorber design

Table 15 showed the total heat transfer capacity, LMTD, and UA which established the AHE design requirement. A suitable AHE absorber has been designed that is similar to the GAX absorber, i.e., a vertical coil in a vertical cylinder. This design has the further advantage that it should be possible to combine the GAX and AHE absorbers in a single shell, saving the weight and cost of one pair of dished heads for the containment shell.

Design Alternatives. The only design alternative considered for the AHE would be to design an absorber with the absorption process inside the tube coil and the generation process outside. Such an alternative would have rejected the considerable practical experience embodied in the ARKLA design and contradicted the reasons for choosing to have the absorption process on the outside of the GAX absorber tube.

Design Considerations. The design criteria for the AHE also included reasonable sizes for heat exchanger height and coiling diameter for the heat exchanger tubes. The overall heat transfer coefficient (U) of 187 Btu/hr-ft^2-F has been assumed for the AHE design, based on the ARKLA SCA data. The major difference between the AHE design and the ARKLA data is the heat transfer capacity, which is nearly twice for the AHE design compared to that for the ARKLA system. With the same overall coefficient and the heat transfer rate nearly double, the difference is made up with increased surface area (tube length) for the AHE design. Table 17 shows the major design parameters for the AHE absorber.

Once again, the critical design criterion for the AHE (and GAX) is mass transfer and not heat transfer. Sufficient surface area, optimum gap space between the coil and shells, and sufficient time for mass exchange are important parameters in the design. Figure 26 shows the drawing of the AHE absorber that meets the design goals. Similar to the GAX absorber, the design shown has been specifically designed for laboratory testing. Hence, sight ports and thermocouple penetrations have been included. A final prototype version would not need to have this additional hardware.

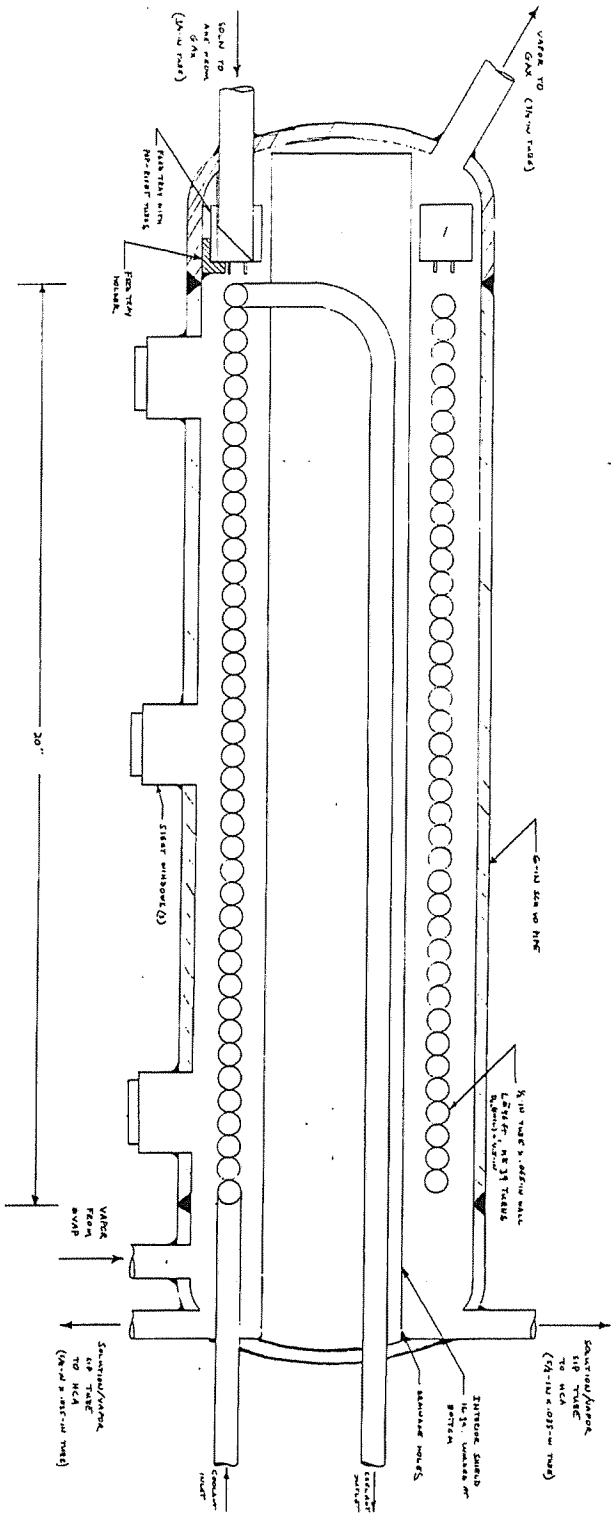

Figure 26. AHE absorber design

Table 17. AHE Absorber Design Comparison

Parameter	ARKLA SCA	AHE
Q (BTU/hr)	16,782	30,000
LMTD (°F)	31.1	~36
UA (BTU/hr-°F)	550	720
A (ft^2)	2.95	3.86
U (BTU/hr-ft^2-°F)	187	187
D (coil), (in)	2.75	4.5
H_t (coil), (in)	25.5	20
Coolant flow, (#/min)	2.0	~2.5
Inlet flow, (#/min)	3.3	4.6
D_t, (in)	3/8 (19/32" vertical)	1/2"
L (ft)	30	46
n turns	41.7	39

The dripper design used in the AHE is the same as is being used in the GAX absorber, so with the higher solution flow rate into the AHE, wetting of the coil should not be a problem with a clean, oxidized coil.

HCA Absorber. An in-tube absorber design was chosen for this component, with parallel flow of the solution and vapor in counterflow with the hydronic fluid. The hydronically cooled absorber (HCA) design is based on previous experience with a hydronically cooled absorber for an ammonia/water heat pump. It is also based on the absorber design used in an early design for the Bryant absorber, where the solution and vapor were required to flow upward through the absorber. By using a parallel-flow, in-tube absorber, the solution and vapor are mixed at the solution exit from the AHE to transport the mixture to the top of the HCA coil, using a slight pressure drop in the mixture to drive this flow.

Because the solution-vapor mixture only needs to flow through the absorber and into the solution pump, this small pressure drop has little effect on the cycle. The Bryant design showed that the absorber can function with a vertical lift of 4 feet, while our design requires a lift of only 2 feet.

The advantage of this absorber design is that it minimizes overall absorber height. The designs of the GAX absorber and the AHE result in a combined height of 4 to 5 feet. Since the HCA is likely to have a height of 2 to 3 feet, the overall unit height would be too great if all three absorber sections were stacked on top of each other.

Design Alternatives. A number of alternative designs were considered for the HCA. The first was to use a falling-film absorber with a coiled heat exchanger, similar to the GAX absorber and the AHE. However, such a design requires large diameter tubes to accommodate the hydronic fluid flow rate, which is much larger than the solution flow rate. In such a design for an earlier heat pump, two absorbers were needed in parallel, in two separate shells, so the required surface area of tubes could be contained and not exceed the 6-inch maximum diameter needed to avoid using a coded pressure vessel.

Whereas the GAX absorber and AHE may require tubes of 0.5 to 0.75-inch inside diameter, a falling-film HCA could require a tube diameter of 1.25 to 1.5 inches. The minimum bending radius for making low-cost tubing coils is usually more than three times the tube diameter. Hence, a tube diameter of 1.5 inches can result in a coil with a centerline diameter of 9 inches and an overall diameter of 10.5 inches. Such a coil requires a shell diameter of about 11 inches, far more than the 6-inch maximum inside diameter needed to avoid having to manufacture the absorber shell to ASME pressure vessel code standards.

Another alternative was to use an air-cooled absorber for the heat output absorber, as is done for the ARKLA-style chillers. Such a design was ruled out early in the cycle design process because a simple air-cooled absorber can only be used for air conditioning. Either a hydronically cooled absorber or some type of double-walled absorber is needed to isolate

indoor air from the ammonia solution in the event of an absorber tube leak. None of these approaches appeared to offer much potential for low-cost absorber construction, so they were dropped from further consideration in Task 1.

Design Considerations. Significantly more information is available on this type of heat exchanger than either the GAX or the AHE because of the Dual-Cycle heat pump development at Battelle. Several types and sizes of HCA have been developed previously. The HCA design is therefore heavily based on past operating test data. Table 15 showed the total heat transfer capacity, LMTD, and UA, which established the HCA design requirements. A suitable HCA absorber has been designed which uses in-tube absorption through two vertically coiled tubes in parallel. The coil is located inside an annular jacket which is cooled by hydronic fluid.

An overall heat transfer coefficient of 54.1 Btu/hr-ft^2-°F has been used for the HCA design based on the Dual-Cycle test data. Once again, the major difference between the HCA design and the Dual-Cycle data is the heat transfer capacity, which is 67 percent greater for the HCA design. With the same overall coefficient and the heat transfer rate greater, the difference is made up with increased LMTD (from 12 to ~21°F) rather than through surface area (tube length). Table 18 shows the major design parameters for the HCA absorber.

Once again, the critical design criterion for the HCA is mass transfer and not heat transfer. Since the absorption is in-tube, surface wettability is important but not as important as in the AHE or the GAX, which are external tube, falling-film absorbers. The HCA has one similarity to previous ARKLA absorber designs in that the ammonia entering the heat exchanger is two-phase flow. Refrigerant vapor from the evaporator is directed to the base of the AHE where it feeds the AHE and the GAX absorber in counterflow. The refrigerant vapor that is not absorbed in the two falling film absorbers is sipped into the two HCA tubes with the weak ammonia solution. Therefore, one crucial design issue is providing enough

Table 18. Hydronically Cooled Absorber Comparison

	Dual-Cycle Absorber*	HCA+
Q (BTU/hr)	30,000	50,000
LMTD (°F)	12.0'	~21
UA (BTU/hr-°F)	2500	2334 (38.9 BTU/min°F)
A (ft^2)	~46.2	43.1
U (BTU/hr-ft^2-°F)	54.1	54.1
D (coil), (in)	8.62	8.62
H_t (coil), (in)	26.06	34.75
m-in (#/min)	~4.5	~3.0
m-cooling (#/min)	~60	31.3
D_t (in)	5/8"	5/8"
L (ft)	73	40.6/coil
n turns	~32	18/coil

flow area for the two-phase mixture to flow through the HCA without excessive pressure drop. The HCA has been designed with two parallel coils to eliminate this potential problem. Figure 27 shows the scaled drawing of the HCA absorber.

An additional design consideration for the HCA was the need to have an open volume upstream of the solution/vapor entrance to the HCA. This open space provides a reservoir in which solution can accumulate when the heat pump is shut down. Despite the use of block valves in the solution line to the absorbers, solution in the absorbers at shutdown will accumulate at the lowest elevation in the absorber system, i.e., the bottom of the AHE shell. Since this is the most desirable point for the entrance of the refrigerant vapor into the absorbers, the vapor entrance could be flooded with solution when the unit is shut down. Although the evaporator pressure should rise and the absorber pressure should drop during

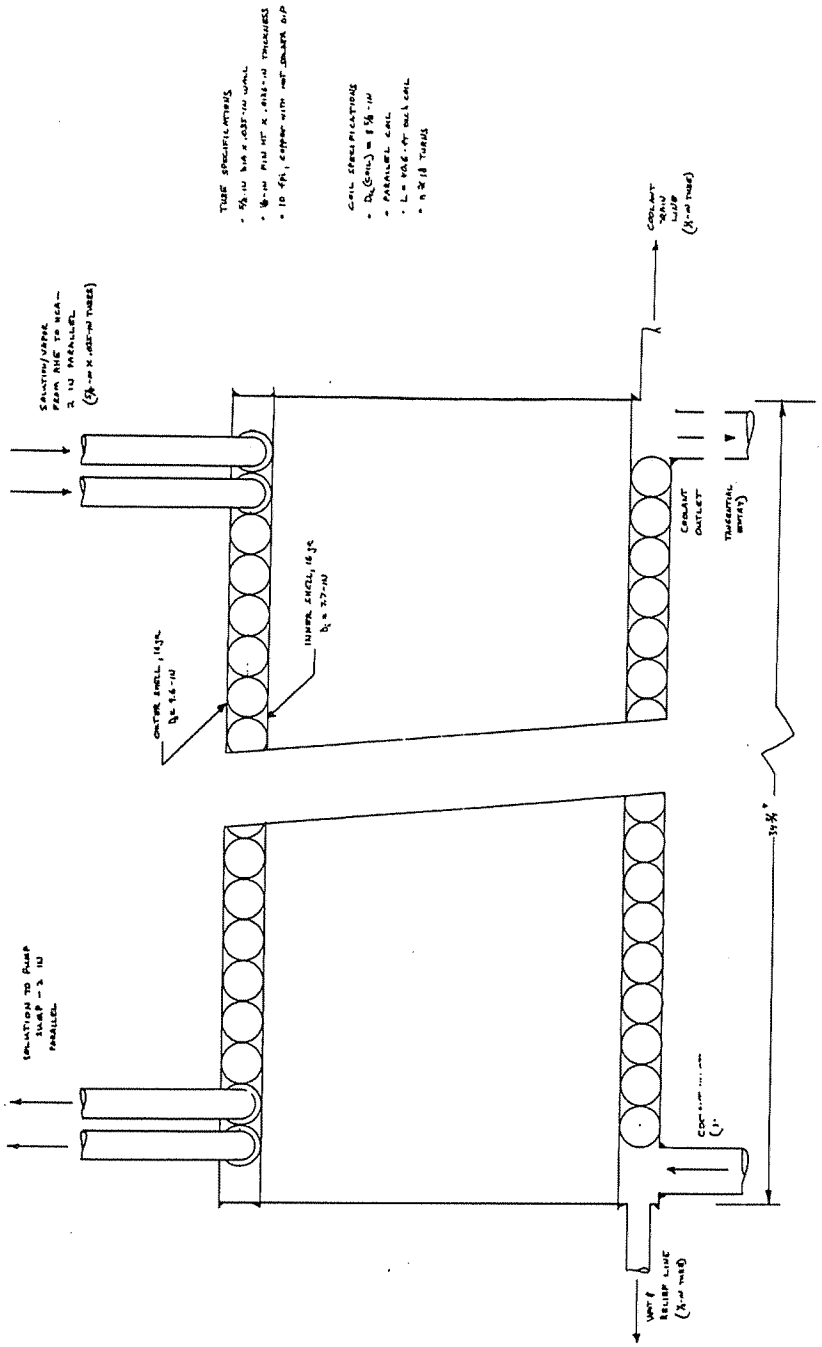

Figure 27. HCA absorber design

shutdown, units can experience flooding of the evaporator during a shutdown or the subsequent restart unless there is sufficient space for the solution to accumulate without flooding the vapor feed tube. The arrangement of the vapor feed line to the AHE and the AHE design provide the required space in the absorber.

Composite Absorber Design. All three absorbers have been designed not only to meet the thermodynamic goals established by the computer model but also to meet the future hardware constraints of a packaged cycle. This latter constraint is necessary to put some general boundaries on the absorber configuration. The current plan is to fabricate the GAX and AHE absorbers in the same shell with the GAX stacked above the AHE. The HCA would then be configured around these two absorbers in a separate annular shell. This configuration is shown schematically in Figure 28. Preliminary estimates for absorber package dimensions have been made and also are shown in this figure.

The initial plan for the interconnections between the AHE and the HCA was to have the solution/vapor mixture flow upward through the HCA, counter to the downward flowing hydronic fluid in the shell. The solution would then exit from the top of the HCA and drop to the pump inlet through extensions of the two absorber tubes. During preliminary testing, it was found that this piping arrangement reduced the volume of solution available to the solution pump early in each startup. The problem was that until sufficient absorber pressure was generated, there was no driving force to move any solution up through the HCA to the pump. The flow directions through the HCA were revised, so that solution in the HCA at shutdown accumulated in the pump inlet sump and thus was available to the pump at startup. This piping change also reduced the volume required at the bottom of the AHE to avoid flooding the evaporator during shutdowns and startups.

Potential Improvements. As noted in the discussion of the GAX absorber design and the AHE design, one of the concerns about the performance of these absorbers is their ability to provide for sufficient mass transfer. The best design guide for this was the design of the solution-cooled absorber of present ammonia/water chillers. Thus, the focus on

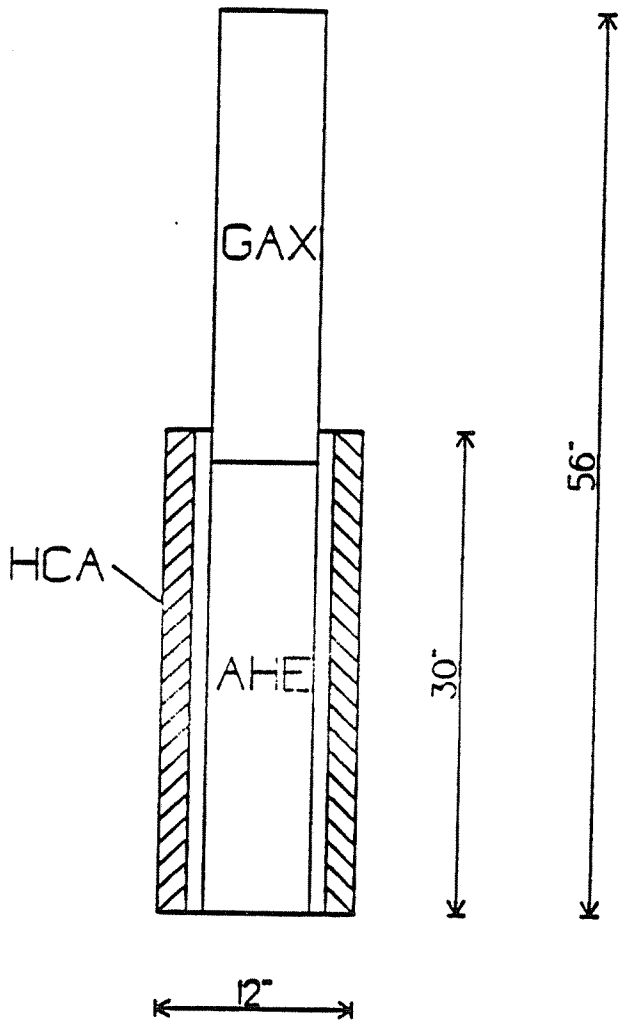

Figure 28. Composite absorber design

providing a tall absorber coil with good wetting and close contact between the solution and the vapor. The heat transfer areas were defined using reasonably conservative estimates for heat transfer coefficients. The next step in absorber design is to consider the use of packing, at least in the GAX absorber, to help with the mass transfer process. Should the absorber tests show that the GAX absorber needs better mass transfer, a design for a two-coil absorber is available that includes packing to improve the mass transfer.

Conclusions

The objective of this subtask was to design the absorbers required for a complete GAX heat pump using ammonia/water as the working fluid pair. This report documents the resulting designs and provides the performance estimates for the absorbers as the design requirements that were the basis for the designs. The most critical area for absorber performance during testing will be obtaining the required mass transfer. To this end, the test absorbers were designed to include

- Internal thermocouples to track the absorption process.
- Solution sampling points between the major absorber sections, so the mass transfer in each absorber can be measured.

Subtask 2.2 Test Loop Design

Approach

Absorber testing is planned in a test stand having four fluid loops, each with its own pump. One loop contains the regenerator/rectifier and the absorption side of the absorbers. The three other loops each contain a cooler/vapor condenser for the vapor generation/solution heating side of the three absorber sections. Figure 29 shows a schematic diagram of the complete test loop.

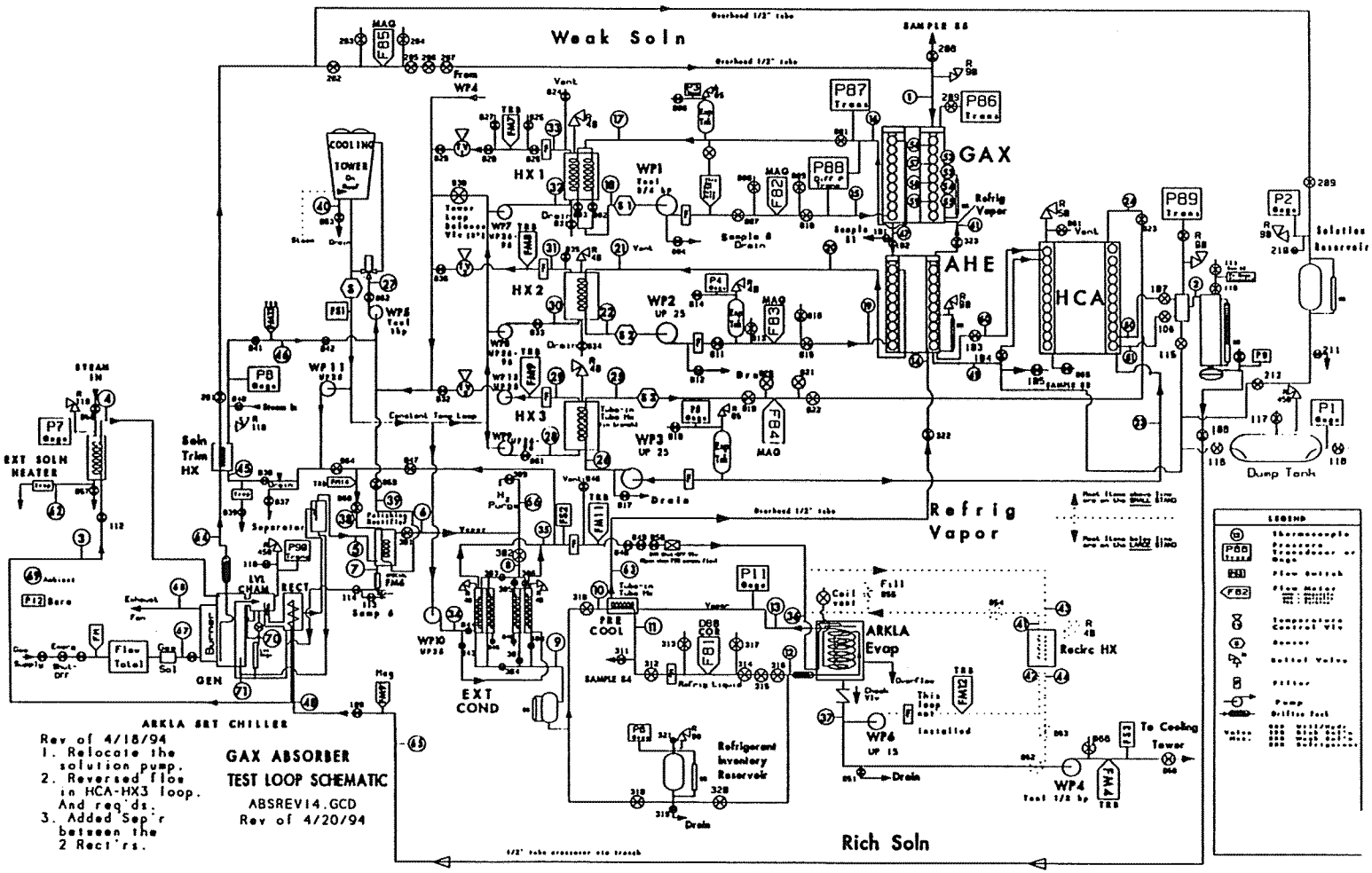

Figure 29. Absorber test loop schematic

The ammonia vapor and weak solution are generated using the generator from an ARKLA chiller. Three intermediate cooling loops are provided to control the cooling independently for

- The GAX absorber (GAXA).
- The absorber heat exchanger (AHE).
- The hydronically cooled absorber (HCA).

The ultimate heat sink for the test loop is a cooling tower.

Absorber/Solution Loop

Certain components in the ammonia loop (generator, rectifier, pump, and evaporator) were taken from an ARKLA 5RT chiller. The remaining components were fabricated at Battelle primarily using carbon steel. Where wettable surfaces were not needed, SS304 was used. All components were cleaned to ARCTEK standards prior to surface heat treatment to establish wettable surfaces. The following sections give a brief description of the individual components.

- Absorber — The absorber was made of three separate heat exchangers which can be vertically stacked and flanged together. Specific designs for the GAXA, AHE, and HCA were discussed in the previous section. The details of these designs, especially tube length and inside diameter, strongly influenced the pump specifications for the individual cooling loops.

- ARKLA Chiller — A 5RT ARKLA chiller was purchased to supply the components for the generator, rectifier, pump and evaporator. The air-cooled condenser and absorbers in the chiller unit were not needed; the ARKLA unit was used only to supply the refrigerant vapor and the weak solution for the GAX test absorber. In this unit the positive displacement pump takes solution from the bottom of the test absorber, and pumps this solution through the rectifier and external solution heater to the generator. The vapor from the generator passes through the rectifier and then to an external polishing rectifier (see below). Differential pressure moves the weak solution between the generator and the test absorber.

The ARKLA chiller can produce 2 to 5 percent weak ammonia solution for the test absorber. An off-the-shelf chiller typically produces 8.5 percent weak solution. Although our GAX design specification is an inlet ammonia solution concentration of 6.0 percent, we plan to test the absorber at lower concentrations. To get to a 6.0 percent or lower (2 to 5 percent) concentration, the burner will be overfired by increasing the gas input, and the solution flow rate will be reduced. Both of these changes reduce the generator exit concentration.

- External Solution Heater — Since the refrigerant vapor and strong solution are used in the test absorber, the solution-cooled absorber in the ARKLA unit was eliminated. However, if the weak solution to the generator is not heated above the rectifier exit temperature of 150°F, significant capacity is lost in the generator. Thus, the solution passes through an external heater to raise its temperature from 150°F to 225°F prior to entering the generator. Although the heating steam flow is manually adjusted, measurement of the solution temperature and excess capacity of the external heater give us the capability of controlling the solution temperature within 1.0°F of design.

- Polishing Rectifier — One problem in using the ARKLA system is that the vapor produced by this chiller is 97.9 percent ammonia, which is lower than the GAX test specification of 99.5 percent. Therefore, a polishing rectifier, cooled by tower water, is used to increase the ammonia concentration. The rectifier reflux is fed back to the ARKLA generator.

- External Condenser — As mentioned previously, the air-cooled condenser in the ARKLA system cannot be used in our test loop and is therefore inoperative. An external condenser (a coil in an annulus) was built, which is cooled by tower water. The nominal heat duty on this component is 70,000 Btu/hr. The condenser design was be based on the results of testing similar condensers in the Dual-Cycle heat pump project.

- Precooler — The ARKLA precooler is used in conjunction with the evaporator. No modifications were made to this component.

- Evaporator — The ARKLA evaporator is used with heating supplied by the tower water. To reduce the heat duty on the cooling tower, the cooling water is run in series from the external condenser to the evaporator and then to the cooling

tower. Although the cooling capacity for the evaporator is 60,000 Btu/hr, the net heat duty to the cooling tower from the external condenser plus the evaporator is about 10,000 Btu/hr. Since the refrigerant flow is also from the condenser to the evaporator, there are well-matched cooling and heating loads between these two components. The refrigerant is being condensed and re-evaporated to make it easier to sample the refrigerant for concentration measurements and measure the refrigerant flow rate.

- Expansion Valve — Three ball valves in series are used as the ammonia expansion valve. This method has worked well previously and allows the flexibility needed over the range of test parameters for the absorber.

- Sight Glass — A sight glass was installed at the bottom of the absorber to observe the liquid solution level in the absorber sump.

- Refrigerant Inventory Reservoir — For solution inventory control, a tank was installed in the condensed ammonia refrigerant line upstream of the evaporator. The pressure differential across the expansion valve at the inlet to the evaporator is used to move ammonia between the test loop and the reservoir.

- Recirculation HX — A heat exchanger was installed on the chilled water side of the evaporator. This heat exchanger can be valved in during cold ambient conditions when there is a potential for freezing of the tower water in the evaporator. During these conditions, the recirculation HX is valved in with pump WP6 (see Figure 29) running to establish a closed recirculation loop heat supply to the evaporator. The fluid in this loop is a 50 percent ethylene-glycol/water to prevent freezing by the cold ammonia being evaporated. Heat is supplied to this closed loop by tower water via the recirculation HX.

- Solution Trim HX — An additional heat exchanger was installed in the solution line between the generator and the absorber. This heat exchanger is used to lower the solution temperature prior to the solution entering the absorber. Overfiring the burner is anticipated to produce more vapor refrigerant for some of the tests. This will elevate the solution temperature above the test specification. The solution trim HX allows better control of the solution parameters entering the absorber being tested.

Intermediate Cooling Loops

Three independent cooling loops are used to supply cooling water to the GAXA, AHE, and HCA. The heat duties for these loops are 30,000 Btu/hr, 30,000 Btu/hr, and 50,000 Btu/hr respectively. The first two loops must have sufficient flexibility and range to closely simulate the ammonia solution which will be used in an actual absorber. LMTDs and water flow rates were chosen to simulate the heat transfer characteristics expected inside the tubes when ammonia is used. These loops transfer all their heat to the cooling tower water via simple shell-and-tube heat exchangers. Temperatures and flow rates are continuously measured in these intermediate loops to obtain accurate heat balances on the test components.

The GAXA cooling medium is ultimately an ammonia solution, which is boiled inside the GAXA tube. It is planned to test the GAX absorbers in four steps:

1. For the initial phase of testing, water is used at relatively high in-tube velocities (single-phase) to establish as high an inside heat transfer coefficient as possible. The outside heat transfer coefficient can then be determined using the Wilson plot technique.

2. Once this coefficient is determined, the testing proceeds with partial boiling of the water in-tube. The Wilson plot technique is used again to determine any changes in the outside coefficient.

3. The testing then switches to single-phase ammonia in-tube. Comparisons of the outside coefficient with the single-phase water data can then be made.

4. Finally, testing of in-tube ammonia boiling testing is planned. This systematic approach provides important insights into the physics of the GAXA.

Although the AHE will ultimately use ammonia as the cooling medium, it was not planned to use ammonia until the breadboard phase since all GAX absorbers will be tested with both water and ammonia. Since the cooling medium is a single-phase liquid for all tests, water is an adequate substitute for the ammonia, provided the inside heat transfer

coefficient with water can later be duplicated with ammonia. This will be confirmed during the testing of each absorber.

Cooling Tower

A cooling tower capable of a nominal heat duty of 135,000 Btu/hr is used as the ultimate heat sink for the absorber test loop. To eliminate cross-talk between cooling tower streams an individual pump and feed line is provided for each circuit so each pump takes its suction directly from the cooling tower sump.

Instrumentation

Temperatures, flow rates, and pressures are measured continuously during testing. Well-type and strap-on thermocouples are used where appropriate to measure the inlet and outlet fluid temperatures for each component so that accurate heat balances can be obtained. Ammonia solution flow rates are measured using magnetic flowmeters. Ammonia vapor flow is measured by first condensing the vapor, measuring the liquid flow rate using a coriolis-type flowmeter (to assure accuracy), then re-evaporating the refrigerant before it goes to the absorber. Solution pressure is measured using an MKS pressure transducer. A Fluke Helios data acquisition system is used to record all temperatures, flow rates, and ammonia pressure. Instrumentation was selected and calibrated in accordance with the Quality Assurance plan prepared previously. Table 19 lists the hardware and instrumentation for the absorber test stand.

Test Loop Operation

Absorber testing is done to determine the UAs for the GAX absorber, AHE, and HCA over a suitable range so that a sufficient data base is established to design these heat exchangers over a range of capacities (3 to 6RT). Also, testing can determine what and where the absorber pinch points are for any absorber tested. This information will help in

Table 19. List of Hardware and Instrumentation for the Absorber Test Stand

No.	Description	Number Needed
1	Thermocouples (All Type T)	50
2	Mag-Flowmeters (FM1-3, FM5)	4
3	Rotameter (FM4, FM7-10, 12, 3)	7
4	Sight Glass Flowmeter (FM6)	1
5	Pressure Transducer	1
6	Fluke Helios DAS and Software	1
7	ARKLA 5RT Chiller	1
8	Pressure Gages	5
9	Ball Valves	50
10	Intermediate HX (shell-and-tube)	3
11	Water Pumps (WP2-11)	10
12	Ammonia/Water Pump (WP1)	1
13	Cooling Tower	1
14	External Steam Heater	1
15	Polishing Rectifier	1
16	External Condenser	1
17	Sight Glass	2
18	Absorber Shell	3
19	Absorber Head	2
20	Absorber Flange	8
21	Coriolis Flowmeter (FM11)	1
22	Solution Trim HX	1
23	Recirculation HX	1
24	Refrigerant Inventory Reservoir	1

understanding the relationship between heat and mass transfer on the surface of the coils, i.e., which mechanism is dominating for a particular coil. Since the mass transfer of refrigerant vapor is usually the more sensitive mechanism, concentration sampling and temperature measurement of the solution at the outlet of each coil is important. Questions to be answered through these tests include:

- Is there adequate contact between the vapor and the solution film to allow the mass transfer to occur? Absorber heat and mass transfer will be measured and analyzed for excessive solution subcooling as evidence of inadequate mass transfer relative to the heat transfer.

- Do the coils remain wettable during start-up, steady-state, and shutdown? This is answered by checking wettability between tests and by looking for consistent results from repeated test points.

- How linear is the absorber performance as a function of film Reynolds' number? A plot of absorber capacity and Nusselt number as functions of solution flow rate and Reynolds' number will show this.

- Ultimately, what is the projected physical size of the absorber? Will the height be reasonable while keeping the shell diameter under 6 inches to preclude having to meet ASME pressure vessel code requirements?

System Start-up

The start-up for the absorber test loop follows the sequence listed below.

1. Check the liquid levels in the generator and absorber sump to ensure the proper inventory is charged. The proper charge depends on test conditions and requirements for the ARKLA chiller.

2. The DAS is checked to ensure proper operation.

3. The cooling tower system is started next. Pump WP5 is turned on, and flow is verified and adjusted to HX1, HX2, HX3, the external condenser, the evaporator, and the polishing rectifier. Pump WP4, taking suction on the evaporator sump, is also

started. Proper operation of the temperature control valve on the pump recirculation line is also verified.

4. Cooling water pumps WP1, WP2, and WP3 are started and proper flow rate verified on the DAS by checking flowmeters FM1-FM3.

5. The ARKLA chiller is then started. Proper operation is verified by monitoring flowmeters FM5 and FM11. Changes to the solution/vapor flow rates are made by adjusting the inlet strong solution valve to the absorber and refrigerant liquid flow control valves respectively. Firing rate is controlled by a manual gas supply valve to the burner. The solution pump in the chiller can run at the proper speed by changing pulley sizes or using a d.c. motor drive.

6. Soon after the start of the ARKLA chiller, steam is supplied to the external solution heater to boost the temperature of the solution going to the generator.

7. When the solution temperatures are within 10 percent of the test point specification, solution concentrations are measured by drawing samples at the absorber inlet (Sample S5) and at the precooler outlet (Sample S4). Concentrations can then be adjusted if necessary, and more samples can be taken.

8. Once the concentrations have been set, the solution temperatures are adjusted to the test specification by adjusting the firing rate and external heater input.

9. Finally, the absorber pressure is regulated by changing the flow rate and temperature of the cooling water to the evaporator and absorber.

10. Steps 6 to 8 are repeated as needed to keep the test equipment at the required condition for each test.

Steady-State Specifications

Using the GAX heat pump models developed in Task 1, absorber test conditions have been specified for ambient conditions of 47°F, 17°F, and 95°F. Table 20 lists the various

Table 20. Absorber Target Independent Variables

Location	Parameter	-10°F	17°F	47°F	95°F	Units
Absorber Solution Inlet	Temperature	225.4	234.5	261.7	269.6	°F
	Concentration	3.38	3.60	6.08	4.47	%
	Flow Rate	5.03	2.40	2.37	2.53	lb/min
	Pressure	16.4	33.7	60.6	76.0	psia
Absorber Vapor Inlet	Temperature	73.0	74.8	68.6	66.1	°F
	Concentration	96.65	99.45	99.85	99.97	%
	Flow Rate	1.35	1.32	1.83	2.10	lb/min
HCA Coolant Inlet	Temperature	94.9	93.1	93.6	103.4	°F
	Flow Rate (MCp)	31.3	31.3	31.3	31.3	*
HCA Outlet	Temperature	128.5	118.5	120.1	128.9	°F
AHE Coolant Inlet	Temperature	109.6	98.3	101.7	112.2	°F
	Flow Rate	6.38	3.73	4.20	4.14	lb/min
AHE Outlet	Temperature	**	-	193.3	190.2	°F
GAX Coolant Inlet	Temperature	**	-	198.3	190.2	°F
	Flow Rate	6.38	3.73	3.36	3.71	lb/min
GAX Coolant Outlet	Temperature	202.2	233.6	235.6	240.2	°F
	Vapor Fraction	0.0	0.0	0.14	0.21	-

* (MCp) Btu/min°F.

** In the LHE cycle, these components are essentially combined into one large AHE. These temperatures are then not computed because they are internal to a single component.

test points for the independent variables of solution and refrigerant vapor into the absorber. The dependent variables are the rich solution conditions, and the capacities for the GAXA, AHE, and HCA.

Testing of absorbers is governed by two factors. First, an absorber will be tested over a broad enough range so that scaling up of the size of the individual heat exchangers can be done based on interpolation of the experimental data and not extrapolation from a correlation. To accomplish this, tests are run over a range of flow rates covering at least ±50 percent of design solution flow rate. Second, sufficient data will be acquired, primarily through repetitive test points, to ensure the statistical significance of the data.

Practice calls for testing at design and off-design points, with multiple tests at key conditions. To keep the test matrix manageable, concurrent tests of the GAXA, AHE, and HCA are used to acquire many of the "off-design" test points.

Measurements

Calibration has been done as indicated in the QA plan. T/Cs are calibrated to 0.5°F, magnetic flowmeters to ±1 percent of full scale, and the pressure transducer to ±1 percent of the reading. This results in UA predictions within 5 percent accuracy.

Approximately 50 temperature channels, one pressure channel, and five flow channels (two ammonia flows, and three flows for the intermediate cooling loops) are used. These data are acquired by the Fluke DAS and scanned and stored every 5 seconds.

T/Cs were installed at both inlets and both outlets of HX1, HX2, and HX3 heat exchangers so that heat balances can be determined and compared with the heat balances for GAXA, AHE, and HCA. (The flows associated with the latter heat exchangers will be determined with more accurate flowmeters since these measurements determine capacity and UA.) The heat balances across HX1 through HX3 are a second check on the primary heat

balances and are not intended to be used for capacity/UA determinations. T/C bundles can be used to measure the coolant temperatures inside each absorber coil.

Sample ports are used to draw solution for concentration measurement at the following locations: solution outlet from the absorber (S3), solution inlet to the absorber (S5), and liquid refrigerant ahead of the pressure-reducing valve at the inlet to the evaporator (S4). Also, sample trays between the GAXA/AHE (S1) and between the AHE/HCA (S2) are used. These sample trays are used for concentration sampling and are also instrumented for temperature. Finally, a sample connection (S6) was installed to measure the concentration of reflux solution coming from the polishing rectifier to the generator. This sample, combined with the refrigerant sample (S4), is expected to help diagnose any problems encountered when the generator is overfired.

Data Analysis

The data from the DAS is stored on 3.5-inch disks and analyzed separately from the DAS computer system. The data can be used to make Wilson plots to determine the overall coefficient (U) and then to deduce the outside coefficients for the GAXA, AHE, and HCA. Plots of UA versus film Reynolds' number will be made for each heat exchanger tested.

An error analysis on the results will be done for each day of testing to establish the overall accuracy of the system. This method also helps identify any changes in instrumentation due to malfunction or need for calibration.

Subtask 2.3 Component Fabrication

Approach

The components for the absorber were fabricated in Battelle's shop and laboratories. Tubing coils were fabricated to Battelle designs by outside vendors and by Battelle's staff.

The material was carbon steel for all the components unless there was a compelling reason for another choice.

Results

The absorber sections were fabricated in separate shells to facilitate modifications and solution sampling. While this approach to absorber fabrication requires a number of joints, each joint can be carefully assembled.

This assembly approach allowed for good flexibility in the assembly of an absorber that includes three different absorber-type functions. There is one absorber shell and coil section each for the GAX, the AHE, and the heat-output absorber. Thus, should it be found during testing that one of the sections is not performing properly, it can be replaced without disturbing or having to rebuild the other sections. This fabrication approach also allowed for close inspection of both ends of each absorber coil at any time during fabrication. Each coil could be checked for good wettability before final assembly.

The completed absorber sections were cleaned, leak checked, and installed in the test loop for testing and evaluation.

Subtask 2.4 Test Loop Setup

Approach

The objective of this subtask was to set up the absorber test loop according to the design developed in Subtask 2.2. Parts of a commercial gas-fired chiller are used as the solution heater, so the purchase and modification of such a chiller was a part of this subtask. Another element was purchasing and setting up a small cooling tower to service the cooling needs for the absorber. The fired regenerator puts about 100,000 Btu/hr into the absorber unit and all this heat is ultimately be removed to a coolant. The use of city water in a

once-through cooling system would have required a large volume of water, so a small cooling tower appeared to be a good alternative. (Such a unit can be used in winter conditions by circulating the water and not using the fan.) The heat exchangers needed for cooling the solutions and condensing the GAX vapor were fabricated.

The test loop was set up, instrumented, and had its controls installed as part of this subtask. An available data logger and computer were set up for data acquisition from the test loop and for data reduction. These functions were computerized except for solution concentration measurements.

This subtask was complete when the test loop was completed, cleaned and leaktight with the absorber installed, ready for testing.

Subtask 2.5 Absorber Testing and Improvement

In this subtask, a series of 20 tests were conducted to determine the performance of the initial absorber design and identify the needed design improvements.

The system was charged with coolants in the hydronic loops and with solution in the solution loops. Ammonia/water solution was charged as aqua-ammonia, 30 percent ammonia/water solution, by weight. Ammonia liquid was directly charged to the refrigerant lines.

The initial solution charge was inhibited with sodium silicate to reduce the corrosive effect of the solution and minimize gas generation. The silicate was subsequently found to precipitate from the solution between the absorber exit and the solution pump, clogging the pump. Initially, this clogging was believed to be the result of contaminants, possibly cleaning solution, that had not been flushed from the loop. Repeated flushings did not remedy this problem, and attention focused on the silicate inhibitor. Eliminating the use of an inhibitor did end the clogging problem and testing was begun. Later, sodium chromate

was added as an inhibitor and to give positive indications of the presence of solution in the refrigerant.

Test Results

A total of 20 absorber tests were conducted, ten in the air conditioning (A/C) mode, six in the cold ambient heat pumping mode (CAHP), and four in the warm ambient heat pumping mode (WAHP). Tables 21 and 22 summarize the objectives of these tests and provide a key to the changes made between the tests to bring the tested component(s) closer to the desired test conditions.

Full use was made of the capabilities of the absorber test stand to adjust the independent variables of each test to the desired values. Particular sets of test conditions were documented as intermediate conditions between two conditions of primary interest. Hence there are a number of test points that do not correspond to a particular design point. A number of changes were made to the absorber test stands during the test campaign, but none of these changes affected the data channel numbers (so these are consistent for all tests) and none of the changes physically affected the test absorbers. Particular changes are discussed throughout the report, as appropriate.

The independent variables for the tests were

1. Flow rates in the heat exchanger coolant loops, FM 7, 8, and 9, as shown in Figure 29.
2. Flow rates in the absorber coolant loops, FM 82, 83, and 84.
3. Flow rates in the evaporator loops, FM 4 and 12.
4. Solution flow rate to the GAX, FM 85.
5. Heat input to the generator.
6. Flow rate to the condenser, FM 11.
7. Flow rates to the auxiliary heaters and coolers.

Table 21. Summary of Air Conditioning Mode Tests

Test Number	Objective	Comments
0810-1 A/C	System Capacity	Initial test—AHE absorbing too much vapor, capacity high; GAX and AHE are low in capacity. GAX peak temp is close to target.
0810-2 A/C	Capacity Adjustment	AHE capacity down; GAX and HCA are up, but still not on target. GAX outlet temp is above target.
0811-1A A/C	GAX Capacity and Temperature Rise	GAX at 98% capacity, temp rise is 143% of target; AHE is 96% and HCA is 87% of targets.
0811-1B A/C	HCA Capacity	HCA is a 97% of target; AHE is at 102.5% and GAX is at 92%. GAX exceeds delta t target. Pressure on all above runs was about 10% higher than design.
0811-1C A/C	System Capacity at Design Absorber Pressure	Pressure was down to 99% of design. GAX at 92% capacity; AHE at 94% and HCA at 75%.
0811-1D A/C	System Capacity at Design Pressure	Near duplicate of 0811-1C.
0816-0 A/C	AHE Test	Good capacity and temp rise on GAX; HCA low on capacity. AHE on design temperatures, but capacity is low. Estimated concentrations ok.
0816-1 A/C	HCA Test	90% capacity on HCA; AHE and GAX are low capacity; pressure ok.
0816-2 A/C	HCA Test	HCA at 101% of design capacity.
0815-5 A/C	GAX Test	Proper delta t for GAX, capacity was 103% of design, pressure at 105% of design.

Table 22. Summary of Heat Pumping Mode Tests

Test Number	Objective	Comments
0817-4 CAHP	Initial CAHP test	Total capacity lower than design, pressure high, saturation temperature 45 F, 17 F target.
0818-0 CAHP	Capacity Test	GAX capacity higher than design; AHE and HCA capacity lower than design.
0822-0 CAHP	AHE and HCA Test No GAX in Final Test	Low capacity, high pressure.
0822-1A CAHP	AHE and HCA Test	Lower pressure; lost HCA capacity.
0822-1B CAHP	AHE and HCA Test	Reduced AHE coolant flow and capacity, HCA up, but still below target.
0822-1C CAHP	AHE and HCA Test	HCA still low on capacity, but improved; increased refrigerant flow.
WAHP		
0818-1 WAHP	Initial WAHP Test	AHE low, GAX high.
0818-3A WAHP	GAX Test	GAX on target; AHE and HCA low.
0818-3B WAHP	AHE and HCA Test	AHE better, GAX and HCA low.
0818-3C WAHP	AHE and HCA Test	AHE meets target; HCA low, but best yet.

The cooling tower controls were typically set to provide 85°F cooling water for all the coolant loops. The solution pump was operated to keep the HCA drained of solution at its exit end. The solution and refrigerant reservoirs were used to adjust the total charge of fluids and to adjust the concentration of solution at the absorber exit. The test stand imposed very few limits on the conditions that could be attained; primarily these limits were due to vapor pressure drop limits between the evaporator and the absorbers at cold ambient testing conditions. These limitations can be reduced before testing resumes.

Data analyses were conducted by evaluating the performance of the components relative to their design targets in tests where steady, consistent data were obtained. Data points are based upon the average of 10 to 20 minutes of measurements made at 15-second intervals.

Another analysis tool used was a computer program that could perform equilibrium state energy and mass balances on constant pressure absorption and desorption processes. This program allows the analyst to consider a number (ten to several hundred) of finite elements in the absorption process and determine the energy and mass flows for each element, along with the temperature and concentration for all flows in and out of the element. The program is described in more detail in Appendix C, which contains the advance text of an ASHRAE paper describing the program and some of its uses. The comparison of the results of key tests and the predictions of this model are shown in several figures in the following sections.

The test results are discussed in the following sections, for each mode of heat pump operation.

Air Conditioning Mode Tests. A total of ten tests of the absorbers were conducted at air conditioning conditions. Tables 23, 24, and 25 show the results of these tests for the GAX absorber, the AHE, and the HCA respectively. Each table shows the results for one of the absorbers and the design goals for that absorber in the air conditioning mode. The first

Table 23. Test Results for the GAX Absorber in Air Conditioning

GAX ABSORBER AC::95F		A0810_1 1_8800-10000	A0810_2 2_3900-4500	A0811_1A 1_2300-2900	A0811_1B 1_7800-9000	A0811_1D 1_12000-12600	A0811_1C 1_14200-15400	A0816_0 0_6700-7100	A0816_1 1_8700-9000	A0816_2 2_1500-2700	A0816_5 5_400-950	Design Goals
GAX												
Soln In	F,T01	269.4	269.3	266.7	261.2	253.5	259.2	260.6	263.2	273.0	252.6	262.6
Soln In,sat	F(%in,P86)	263.6	270.6	265	268.4	262.7	262.4	258.7	258.2	258.2	260.2	262.6
Soln Out	F,T47	204.9	207.2	205.0	212.2	205.6	204.9	202.8	212.5	224.4	198.2	212.3
Vapr In	F,T61	163.0	169.2	164.1	170.1	163.7	161.1	163.1	170.5	181.7	162.4	212.3
Cool In	F,T15	200.2	198.1	188.5	197.3	189.9	189.8	193.2	207.0	223.6	188.8	191.6
Cool Out	F,T16	236.9	246.9	249.5	254.2	247.2	247.3	242.4	249.1	258.4	237.2	234.3
Cool Flw	GPM,F82	1.49	1.31	1.14	1.15	1.13	1.13	1.49	1.51	1.50	1.52	0.44
AbsPress	PSIA,P86	82.6	89.6	83.3	84.2	78.5	76.2	77.1	77.4	76.0	80.7	77.2
GenPress	PSIA,P90	239.7	239.4	236.7	243.5	235.0	235.1	261.5	264.4	263.4	259.7	244.3
Refr Flw	#/min,F81	2.03	2.08	2.00	2.03	2.10	2.00	2.01	2.00	1.89	1.91	2.014
Soln FloIn	#/min,F85	2.709	2.644	2.638	2.871	2.732	2.725	2.936	2.948	2.921	2.648	2.585
Soln FloOu	#/min,calc	3.185	3.180	3.138	3.367	3.216	3.206	3.452	3.358	3.211	3.182	3.147
Soln X In	%(T71,P90	9.45	9.21	9.27	8.74	8.88	8.51	9.45	9.62	9.34	9.81	6.03
Soln X Out	%(T47,P86	22.35	23.81	23.11	21.51	21.95	21.63	22.35	20.02	16.88	24.28	20.04
Vapr X In	%(T61,P86	95.76	95.82	96.04	95.37	95.78	95.94	95.76	94.81	92.79	96.07	84.55
HEAT DUT	BTU/HR	26380	30847	33531	31559	31248	31342	35532	30833	25167	35521	34340
LMTD	F	14.3	14.8	16.8	10.5	10.3	13.4	13.5	9.2	4.7	12.2	24.17
UA	B/h.ft2.F	1844	2088	1991	3011	3032	2332	2638	3369	5361	2915	1421

Table 24. Test Results for the AHE in Air Conditioning

GAX ABSORBER AC::95F		A0810_1 1_8800-10000	A0810_2 2_3900-4500	A0811_1A 1_2300-2900	A0811_1B 1_7800-9000	A0811_1D 1_12000-12600	A0811_1C 1_14200-15400	A0816_0 0_6700-7100	A0816_1 1_8700-9000	A0816_2 2_1500-2700	A0816_5 5_400-950	Design Goals
AHE												
Soln In	F,T47	204.9	207.2	205.0	212.2	205.6	204.9	202.8	212.5	224.4	198.2	212.3
Soln Out	F,T49	156.4	162.2	159.6	165.3	144.0	149.4	156.6	161.2	171.3	160.4	164.3
	F,T60	156.5	162.7	160.2	166.5	149.4	152.2	158.5	163.3	173.0	161.0	164.3
	F,AVG	156.4	162.5	159.9	165.9	146.7	150.8	157.5	162.3	172.2	160.7	164.3
Vapr Out	F,T61	163.0	169.2	164.1	170.1	163.7	161.1	163.1	170.5	181.7	162.4	212.3
Vapr In	F,T14	86.9	86.8	88.4	88.7	48.8	49.9	54.3	57.2	81.3	91.4	74.9
Cool In	F,T19	116.8	121.0	120.5	122.6	121.0	120.9	115.8	116.6	122.7	115.5	115.2
Cool Out	F,T20	192.8	201.2	193.7	199.9	193.3	192.4	193.6	199.6	210.7	188.8	191.6
Cool Flw	GPM,F83	0.91	0.64	0.64	0.64	0.64	0.64	0.53	0.53	0.53	0.53	0.55
Press	PSIA,P86	82.6	89.6	83.3	84.2	78.5	76.2	77.1	77.4	76.0	80.7	77.2
Refr Flw	#/min,F81	2.03	2.08	2.00	2.03	2.10	2.00	2.01	2.00	1.89	1.91	2.014
Soln FloIn	#/min,calc	3.185	3.180	3.138	3.367	3.216	3.206	3.452	3.358	3.211	3.182	3.147
Soln FloOu	#/min,calc	3.760	3.776	3.724	3.973	4.033	3.932	4.075	4.006	3.809	3.652	3.6
Soln X In	%(T47,P86	22.35	23.81	23.11	21.51	21.95	21.63	22.35	20.02	16.88	24.28	20.04
Soln X Out	%(T49,P86	34.37	35.71	35.1	33.61	37.8	36.06	34.37	33.09	30	34.29	32.48
Vapr X In	%(T06,P90	98.6	97.58	97.83	98.4	98.53	98.27	98.6	98.44	97.94	98.9	99.9
Vapr X Out	%(T61,P86	95.76	95.82	96.04	95.37	95.78	95.94	95.76	94.81	92.79	96.07	84.55
HEAT DUT	BTU/HR	33873	25191	22783	24077	22532	22283	20268	21603	22942	19093	23689
LMTD	F	23.2	18.3	22.5	24.7	18.2	20.0	21.6	25.9	27.8	22.8	32.9
UA	B/h.ft2.F	1459	1375	1012	975	1236	1116	940	833	824	838	720

Table 25. Test Results for the HCA in Air Conditioning

GAX ABSORBER AC::95F		A0810_1 1_8800-10000	A0810_2 2_3900-4500	A0811_1A 1_2300-2900	A0811_1B 1_7800-9000	A0811_1D 1_12000-12600	A0811_1C 1_14200-15400	A0816_0 0_6700-7100	A0816_1 1_8700-9000	A0816_2 2_1500-2700	A0816_5 5_400-950	Design Goals
HCA												
Soln In	F,T49	156.4	162.2	159.6	165.3	144.0	149.4	156.6	161.2	171.3	160.4	164.3
	F,T60	156.5	162.7	160.2	166.5	149.4	152.2	158.5	163.3	173.0	161.0	164.3
	F,AVG	156.4	162.5	159.9	165.9	146.7	150.8	157.5	162.3	172.2	160.7	164.3
Soln Out	F,T50	113.6	115.3	112.4	115.0	112.2	111.6	112.4	113.6	115.8	111.4	115.2
	F,T51	114.6	116.4	112.9	114.7	111.4	111.9	113.9	114.5	115.2	111.9	115.2
	F,AVG	114.1	115.9	112.6	114.9	111.8	111.7	113.2	114.1	115.5	111.6	115.2
Vapr In	F,T14	86.9	86.8	88.4	88.7	48.8	49.9	54.3	57.2	81.3	91.4	74.9
Cool In	F,T24	101.6	102.4	99.2	100.0	97.5	98.1	99.6	100.9	102.4	99.9	103.5
Cool Out	F,T23	130.3	134.5	130.8	135.1	122.3	125.3	130.4	129.8	131.0	123.8	129.8
Cool Flw	GPM,F84	2.74	2.75	2.74	2.74	2.73	2.73	2.73	3.10	3.52	3.53	3.75
Press,In	PSIA,P86	82.6	89.6	83.3	84.2	78.5	76.2	77.1	77.4	76.0	80.7	77.2
Press,Out	PSIA,P89	77.7	84.7	77.9	78.9	74.0	71.4	72.1	72.2	70.8	75.7	77.2
Refr Flw	#/min,F81	2.03	2.08	2.00	2.03	2.10	2.00	2.01	2.00	1.89	1.91	2.014
Soln FloIn	#/min,calc	3.760	3.776	3.724	3.973	4.033	3.932	4.075	4.006	3.809	3.652	3.6
Soln FloOu	#/min,calc	4.734	4.726	4.641	4.898	4.832	4.721	4.946	4.951	4.807	4.563	4.6
Soln FloOu	#/min,F91	4.608	4.566	4.454	4.674	4.666	4.570	4.813	4.839	4.665	4.343	4.6
Conc In	%(T49,P86	34.37	35.71	35.1	33.61	37.8	36.06	34.37	33.09	30	34.29	32.48
Conc Out	%(T02,P86	45.21	45.21	46.82	46.3	46.51	45.76	45.21	44.95	44.04	46.56	47.14
HEAT DUT	BTU/HR	38880	43652	42839	47532	33501	36721	41642	44253	49869	41661	49204
LMTD	F	18.5	19.8	20.3	21.9	18.9	18.9	19.6	21.4	24.5	22.0	21.08
UA	B/h.ft2.F	2099	2199	2110	2172	1775	1939	2130	2069	2032	1896	2334

four tests were conducted to evaluate the capacity and temperature rise capabilities of the GAX and the AHE. The fifth test, 0811-1C was conducted at the design absorber pressure and showed the potential for closely approaching the capacity goals for the GAX and AHE. The seventh test, 0816-0, was conducted to evaluate the performance of the AHE at the design temperatures at its inlets and outlets. The next two tests evaluated performance of the HCA, which attained capacity only with difficulty. The final test was an evaluation of performance of the GAX, with the coolant temperature rise reduced to the design values.

The GAX tests showed that the GAX absorber was capable of achieving both its capacity and temperature rise targets, despite two limitations. The first was that the temperature of the vapor entering the GAX was 30 to 50°F colder than its design target. The second was that some degree of solution flow maldistribution was occurring in the GAX, as evidenced by the internal solution temperatures.

Figure 30 shows the comparison of the measured GAX performance with the model prediction from the finite element absorption model. The model prediction shows the temperature-energy curve expected for an ideal absorption process at the measured pressure, inlet concentration, solution flow rate, and vapor flow rate. The measured absorber performance is matched to the model prediction at the high temperature end of the absorber. The absorbed energy is that energy which must be absorbed by the coolant to maintain thermal equilibrium in the ammonia absorption process.

Four points (solid squares) are shown in this and all the following figures. The four points describe the ending state points for the three absorber sections. From left to right on the figure, the first pair of points show solution temperatures in and out of the HCA, the next pair show the solution temperatures in and out of the AHE, and the last pair show the GAX absorber conditions. Only four points appear because the two intermediate points are common to two absorber sections. Any deficiencies in absorption appear as a gap between the left most data point and the vertical axis.

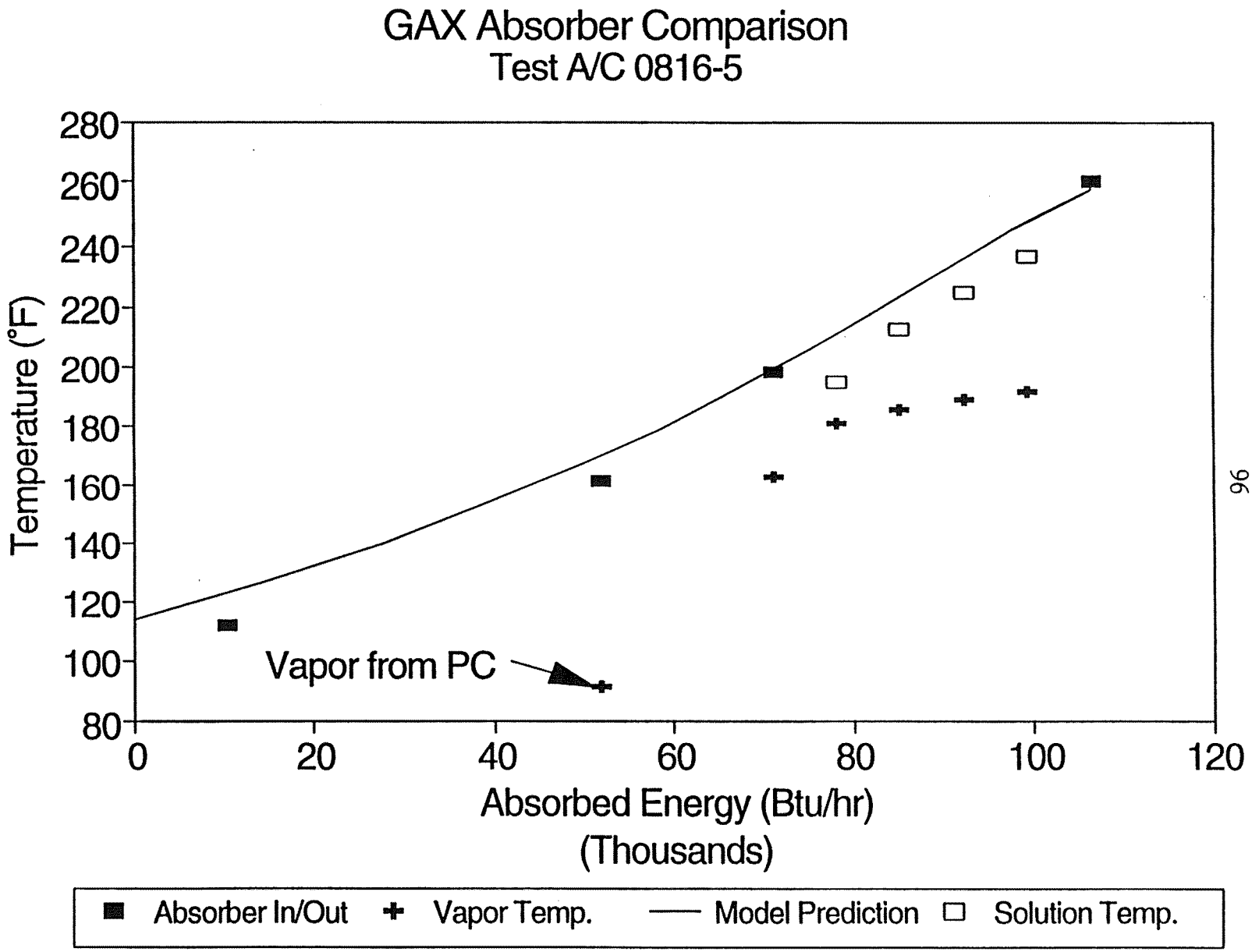

Figure 30. Comparison of test results and model predictions

Four additional points (open squares) show the solution temperature measured inside the GAX absorber at four equally spaced locations. These points are plotted at their respective temperatures and at equal increments of absorber energy. Six vapor temperatures are plotted also: the vapor inlet temperature to the AHE (from the precooler, PC), the vapor temperature into the GAX, and four vapor temperatures inside the GAX. A solid line connects the GAX vapor temperatures, with the inlet temperature being the lowest of the five.

The evidence of flow maldistribution is in the comparison of the solution outlet temperature from the GAX and the lowest internal solution temperature in the GAX. In most tests, the solution temperature at the GAX outlet was higher than at the lowest internal point. This condition most likely results from the loss of hot solution from the upper part of the GAX coil and subsequent mixing with cooler solution from the bottom of the coil.

The AHE tests showed that the AHE performance was below design capacity, and high on heat transfer, with an overall UA of 940 Btu/hr-°F as compared to a design value of 720 Btu/hr-°F. The solution temperatures on the absorbing side were below the design values which contributed to low absorption and low capacity. The vapor leaving the AHE for the GAX was not heated to the degree expected. The GAX did not appear to be substantially limited by the low temperature of its vapor feed.

The HCA had difficulty attaining its design capacity, meeting its target in only one test, when the AHE and GAX were adjusted to minimize their absorption of vapor. The limitations of the HCA were more apparent in the lower temperature tests for the heat pumping modes.

Heat Pumping Mode Tests. Four tests were conducted in a Warm Ambient Heat Pumping (WAHP) mode. The results were summarized in Table 22 and presented in Tables 26 to 28 and Figure 31. The GAX absorber showed its ability to exceed its heat transfer target and approach its absorption target. In all tests the target for coolant outlet

Table 26. Test Results for the GAX Absorber in the WAHP Mode

GAX ABSORBER HP::47F		A0818_1 1_5200-6500	A0818_3A 3_2600-3800	A0818_3B 3_4500-5200	A0818_3C 3_6800-7400	Design Goals
GAX						
Soln In	F,T01	248.0	249.5	249.3	245.2	257.9
Soln In,sat	F(%in,P86)	254.1	252.9	253.7	256.5	
Soln Out	F,T47	199.8	199.3	205.8	210.9	211.7
Vapr In	F,T61	165.1	161.7	165.7	170.5	211.7
Cool In	F,T15	194.3	192.7	203.9	209.0	192
Cool Out	F,T16	237.8	237.7	242.2	246.8	232.1
Cool Flw	GPM,F82	1.11	1.11	1.11	1.10	0.402
AbsPress	PSIA,P86	59.4	57.7	58.6	63.8	61.41
GenPress	PSIA,P90	217.0	211.4	212.6	218.9	275.6
Refr Flw	#/min,F81	1.57	1.61	1.61	1.67	1.762
Soln FloIn	#/min,F85	2.391	2.501	2.505	2.524	0.291
Soln FloOu	#/min,calc	2.778	2.896	2.852	2.858	2.766
Soln X In	%(T71,P90	6.73	6.59	6.63	7.22	7.74
Soln X Out	%(T47,P86	18.85	18.52	17.2	17.3	16.51
Vapr X In	%(T61,P86	93.8	94.17	93.57	93.39	79.67
HEAT DUT	BTU/HR	23308	24138	20482	20164	23114
LMTD	F	7.6	9.0	4.0	ERR	22.61
UA	B/h.ft2.F	3060	2683	5156	ERR	1022

Table 27 Test Results for the AHE in the WAHP Mode

GAX ABSORBER HP::47F		A0818_1 1_5200-6500	A0818_3A 3_2600-3800	A0818_3B 3_4500-5200	A0818_3C 3_6800-7400	Design Goals
AHE						
Soln In	F,T47	199.8	199.3	205.8	210.9	211.7
Soln Out	F,T49	154.7	151.4	153.7	156.6	158.8
	F,T60	154.0	151.1	153.3	156.3	
	F,AVG	154.4	151.3	153.5	156.4	
Vapr Out	F,T61	165.1	161.7	165.7	170.5	211.7
Vapr In	F,T14	86.8	82.6	82.7	82.2	67.1
Cool In	F,T19	103.6	109.5	111.3	112.7	103.8
Cool Out	F,T20	192.9	186.9	191.6	196.3	192
Cool Flw	GPM,F83	0.46	0.60	0.61	0.61	0.503
Press	PSIA,P86	59.4	57.7	58.6	63.8	61.41
Refr Flw	#/min,F81	1.57	1.61	1.61	1.67	1.762
Soln FloIn	#/min,calc	2.778	2.896	2.852	2.858	2.766
Soln FloOu	#/min,calc	3.241	3.419	3.405	3.436	3.204
Soln X In	%(T47,P86	18.85	18.52	17.2	17.3	16.51
Soln X Out	%(T49,P86	30.66	31.03	30.68	31.33	30.02
Vapr X In	%(T06,P90	97.93	97.63	97.66	98.08	99.88
Vapr X Out	%(T61,P86	93.8	94.17	93.57	93.39	79.67
HEAT DUT	BTU/HR	19971	22809	23958	24945	24794
LMTD	F	22.0	24.2	25.7	26.6	34.44
UA	B/h.ft2.F	908	943	933	939	720

Table 28. Test Results for the HCA in the WAHP Mode

GAX ABSORBER HP::47F		A0818_1 1_5200-6500	A0818_3A 3_2600-3800	A0818_3B 3_4500-5200	A0818_3C 3_6800-7400	Design Goals
HCA						
Soln In	F,T49	154.7	151.4	153.7	156.6	158.8
	F,T60	154.0	151.1	153.3	156.3	
	F,AVG	154.4	151.3	153.5	156.4	
Soln Out	F,T50	103.1	103.2	103.4	104.7	103.8
	F,T51	103.7	103.2	103.6	104.7	
	F,AVG	103.4	103.2	103.5	104.7	
Vapr In	F,T14	86.8	82.6	82.7	82.2	67.1
Cool In	F,T24	92.9	92.6	92.9	93.4	94.5
Cool Out	F,T23	115.2	114.2	115.1	117.1	120.2
Cool Flw	GPM,F84	3.50	3.50	3.50	3.50	3.753
Press,In	PSIA,P86	59.4	57.7	58.6	63.8	61.41
Press,Out	PSIA,P89	57.5	55.7	56.4	61.9	61.41
Refr Flw	#/min,F81	1.57	1.61	1.61	1.67	1.762
Soln FloIn	#/min,calc	3.241	3.419	3.405	3.436	3.204
Soln FloOu	#/min,calc	3.959	4.109	4.117	4.198	4.192
Soln FloOu	#/min,F91	3.751	3.872	3.923	3.958	4.192
Conc In	%(T49,P86	30.66	31.03	30.68	31.33	30.02
Conc Out	%(T02,P86	44.18	43.7	43.73	45.16	46.48
HEAT DUT	BTU/HR	38668	37443	38489	40997	49957
LMTD	F	21.7	21.1	21.6	22.4	21.4
UA	B/h.ft2.F	1779	1773	1779	1826	2334

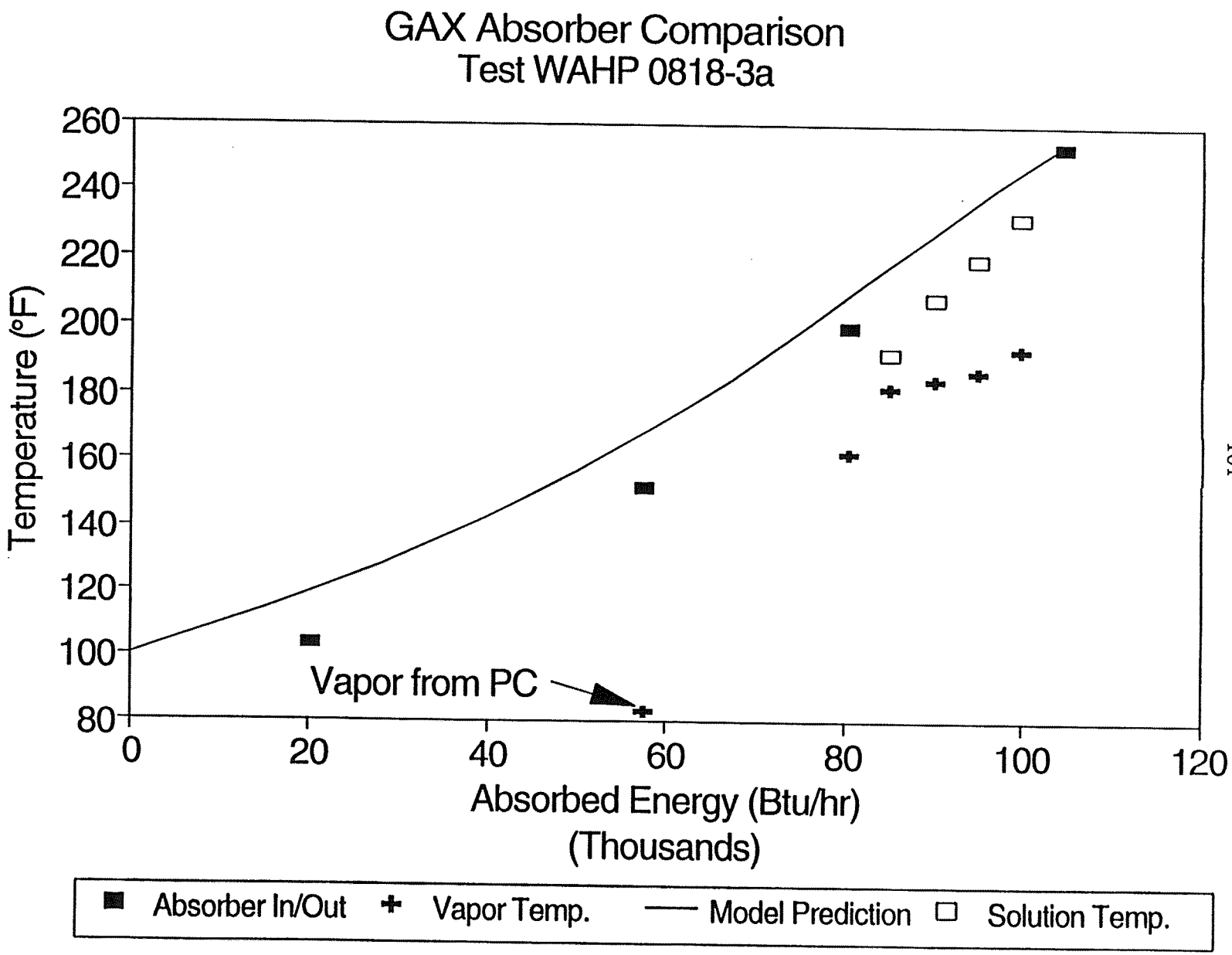

Figure 31. Comparison of test results and model predictions

temperature was met or exceeded. The AHE showed its ability to meet and exceed its heat transfer target, and meet its capacity target. The HCA continued to show difficulty in meeting its targets. Figure 31 shows the comparison of the absorber performance with the ideal estimates of the absorption model. For the test shown, all absorber sections are shown to approach—but not attain—their capacity goals.

Six tests were conducted in a Cold Ambient Heat Pumping (CAHP) mode, attempting to simulate a 17°F ambient condition. Testing was limited to simulation of a 30°F ambient condition by over capacity in the intermediate loop heat exchanger that heats the evaporator and by excessive pressure drop in the HCA and the vapor lines leading to the absorbers.

The GAX absorber proved to have so much excess capacity in this mode that the GAX was not used to allow the AHE and HCA to approach their maximum capacity. Hence, Table 29 shows a trivial capacity for the GAX in the last four tests.

Table 30 shows the results for the AHE tests in the CAHP mode. The AHE attained its design capacity, but only at a much larger than design value for the LMTD. Hence the UA values are all low for the AHE, as compared to the design.

The HCA was able to attain its design capacity in one test at an LMTD that was very close to the design goal, as shown in Table 31.

Conclusions

The test results show that the test stands provide the flexibility and capacity required to meet the needs for testing GAX system absorbers. The GAX system components tested in this first test campaign showed specific limitations in performance, but the GAX absorber met its design targets for capacity and temperature rise. The AHE needs improvement and the HCA needs even more improvement to meet their design targets for capacity and

Table 29. Test Results for the GAX Absorber in the CAHP Mode

GAX ABSORBER HP::17F		A0817_4 4_1800-2500	A0818_0 0_9400-11200	A0822_0 0_13100-13800	A0822_1A 1_3800-4600	A0822_1B 1_7900-8500	A0822_1C 1_11000-11700	Design Goals
GAX								
Soln In	F,T01	246.1	243.9	251.8	248.8	257.7	256.9	
Soln In,sa	F(%in,P8	224.3	237.9	229.5	219	226.3	227.4	
Soln Out	F,T47	191.3	212.2	253.5	247.2	254.4	254.6	
Vapr In	F,T61	156.1	173.9	234.3	225.5	245.8	250.4	
Cool In	F,T15	182.8	215.3	202.6	197.3	204.5	204.6	
Cool Out	F,T16	225.8	240.7	194.7	190.4	196.5	197.4	
Cool Flw	GPM,F82	0.99	1.10	0.03	0.03	0.03	0.03	
AbsPress	PSIA,P86	41.1	47.6	48.4	38.7	40.5	39.9	
GenPress	PSIA,P90	211.2	215.6	204.3	199.1	200.9	207.4	
Refr Flw	#/min,F81	1.11	1.25	1.09	1.09	1.02	1.04	
Soln FloIn	#/min,F85	2.397	2.417	2.453	2.499	2.468	2.653	
Soln FloO	#/min,calc	2.626	2.591	2.220	2.216	2.024	2.027	
Soln X In	%(T71,P9	8	7.09	9.06	8.35	7.4	6.99	
Soln X Ou	%(T47,P8	15.38	12.63	4.26 ++	2.87 ++	2.12 ++	1.96 ++	
Vapr X In	%(T61,P8	92.38	89.48	54.76 ++	51.36 ++	31.5 ++	23.3 ++	
HEAT DU	BTU/HR	20491	13529	-106	-113	-117	-96	
LMTD	F	13.6	ERR	53.9	54.0	55.4	54.6	
UA	B/h.ft2.F	1510	ERR	-2	-2	-2	-2	

Table 30. Test Results for the AHE in the CAHP Mode

GAX ABSORBER HP::17F		A0817_4 4_1800-2500	A0818_0 0_9400-11200	A0822_0 0_13100-13800	A0822_1A 1_3800-4600	A0822_1B 1_7900-8500	A0822_1C 1_11000-11700	Design Goals
AHE								
Soln In	F,T47	191.3	212.2	253.5	247.2	254.4	254.6	241.7
Soln Out	F,T49	149.1	158.4	177.8	159.9	173.9	175.2	162
	F,T60	148.3	156.9	182.7	174.3	182.3	186.0	
	F,AVG	148.7	157.7	180.2	167.1	178.1	180.6	
Vapr Out	F,T61	156.1	173.9	234.3	225.5	245.8	250.4	162
Vapr In	F,T14	87.0	86.3	24.7	14.8	21.1	20.3	78.9
Cool In	F,T19	101.2	104.3	92.3	92.7	93.1	93.1	100.2
Cool Out	F,T20	182.7	201.6	247.3	239.8	246.3	247.7	241
Cool Flw	GPM,F83	0.45	0.46	0.12	0.12	0.10	0.10	0.445
Press	PSIA,P86	41.1	47.6	48.4	38.7	40.5	39.9	33.34
Refr Flw	#/min,F81	1.11	1.25	1.09	1.09	1.02	1.04	1.323
Soln FloIn	#/min,calc	2.626	2.591	2.220	2.216	2.024	2.027	2.387
Soln FloO	#/min,calc	2.996	3.058	2.813	2.886	2.946	3.009	2.904
Soln X In	%(T47,P8	15.38	12.63	4.26 ++	2.87 ++	2.12 ++	1.96 ++	2.3
Soln X Ou	%(T49,P8	26.2	26.32	20.52	20.45	18.35	17.53	19.6
Vapr X In	%(T06,P9	99	98.8	98.5	98.48	74.81	95.9	99.33
Vapr X O	%(T61,P8	92.38	89.48	54.76	51.36	31.5	23.3	99.33
HEAT DU	BTU/HR	18151	21714	8869	8392	7788	7841	7409
LMTD	F	22.8	26.4	30.8	28.9	32.8	31.8	5.74
UA	B/h.ft2.F	797	822	288	290	237	247	1290

Table 31. Test Results for the HCA in the CAHP Mode

GAX ABSORBER HP::17F		A0817_4 4_1800-2500	A0818_0 0_9400-11200	A0822_0 0_13100-13800	A0822_1A 1_3800-4600	A0822_1B 1_7900-8500	A0822_1C 1_11000-11700	Design Goals
HCA								
Soln In	F,T49	149.1	158.4	177.8	159.9	173.9	175.2	162
	F,T60	148.3	156.9	182.7	174.3	182.3	186.0	
	F,AVG	148.7	157.7	180.2	167.1	178.1	180.6	
Soln Out	F,T50	99.8	100.8	102.7	106.0	96.5	96.2	100.2
	F,T51	100.1	102.8	101.0	102.6	99.6	99.7	
	F,AVG	99.9	101.8	101.8	104.3	98.0	97.9	
Vapr In	F,T14	87.0	86.3	24.7	14.8	21.1	20.3	78.9
Cool In	F,T24	91.1	92.2	93.0	91.9	92.6	93.2	93.1
Cool Out	F,T23	108.6	113.6	119.5	114.4	118.0	120.2	118.3
Cool Flw	GPM,F84	3.51	3.49	3.51	3.51	3.52	3.52	3.75
Press,In	PSIA,P86	41.1	47.6	48.4	38.7	40.5	39.9	33.34
Press,Out	PSIA,P89	37.2	46.0	46.2	36.8	38.4	37.3	33.34
Refr Flw	#/min,F81	1.11	1.25	1.09	1.09	1.02	1.04	1.323
Soln FloIn	#/min,calc	2.996	3.058	2.813	2.886	2.946	3.009	2.904
Soln FloO	#/min,calc	3.507	3.665	3.543	3.590	3.485	3.693	3.71
Soln FloO	#/min,F91	3.290	3.444	3.287	3.370	3.302	3.507	3.71
Conc In	%(T49,P8	26.2	26.32	20.52	20.45	18.35	17.53	19.6
Conc Out	%(T02,P8	40.58	41.8	42.56	38.58	40.22	39.63	36.9
HEAT DU	BTU/HR	30455	37059	46065	39292	44238	47057	46994
LMTD	F	20.7	22.6	27.0	27.9	22.8	21.9	20.14
UA	B/h.ft2.F	1471	1637	1709	1410	1943	2150	2333
TOTAL HEAT DUTY		69097	72301	54828	47571	51909	54802	54403

temperature rise under all conditions. However, the test results for all three absorbers provide a basis for making these improvements and for designing other absorbers for future GAX heat pumps.

APPENDIX A.

CHANGES TO THE

BASIC ABSORPTION MODEL

APPENDIX A.

CHANGES TO THE BASIC ABSORPTION MODEL

During the course of this project, it was necessary to define and implement some specific improvements to the basic ABSIM computer model as written by Prof. Grossman. Although initially, the model was somewhat frustrating to use, it has proven to be an exceedingly good and useful analytical tool. Some early limited assistance was received from researchers at the Ohio State University, but ultimately, Battelle efforts showed that these difficulties were unique to the high level of detail needed for the Battelle analyses. The most significant assistance we received was from Prof. Grossman in telephone calls and a meeting at Battelle.

The first problems were with getting one simulation to begin functioning. The model was sensitive to initial estimates for its variables, but additional factors were found that to be important in obtaining converged solutions. Briefly, the key factors were

- Using the proper FORTRAN compiler and compiler options (Microsoft FORTRAN 5.1 and no optimization) for the large size of our simulation.

- Making specific code changes to handle data storage and recovery in our large simulation in a more reliable manner. Our simulation of the GAX cycle is significantly larger than most other simulations using this model.

- Using an "Improved Analyzer" module rather than the heat exchanger module to model the refrigerant heat exchanger precooler. The heat exchanger module could not be made to properly handle the combined liquid and vapor outputs from the evaporator.

- Recognizing that only under special and rare circumstances can the model effectively deal with any truly redundant equations. Unfortunately, the test case for the GAX simulation falls under those circumstances.

A meeting was held with Prof. Grossman to review progress with this model and to make the greatest possible use of his insight and experience with the model. Detailed discussions were held on the use, background and set-up of the model. Changes made to the model and the rationale for these changes were reviewed. It was agreed that Prof. Grossman study these changes further, but the initial assessment was that the changes had been properly made for valid technical reasons.

Since that meeting, further changes have been made to the model, primarily to make it easier to specify the model inputs in a logical manner for particular tasks. To do this, an additional mode of operation was defined for the key heat exchanger modules. Previously, the user had to specify one of four parameters describing the heat exchange process, such as the Log Mean Temperature Difference (LMTD), Closest Approach Temperature, Effectiveness or the product of the Overall Heat Transfer Coefficient and the area. In the new mode we added, the model calculates these parameters when the thermodynamic state for all the streams entering and leaving the component are specified. This change allows the direct specification of inlet/outlet conditions without having to estimate the LMTD for each condition.

The final change made to the model was to represent the condenser component in an ammonia-water absorption cycle as three distinct components. In modelling a partially hydronically coupled cycle, a problem was found with using the same UA value for the outdoor refrigerant to air heat exchanger for both evaporation and condensation. A UA value that was appropriate for the evaporator operation could be defined, but the model could not give realistic results with this UA for the condenser. The specific problem was the condenser coolant inlet and outlet temperatures would be less than the refrigerant inlet and outlet temperatures, but the coolant and refrigerant temperatures would cross-over inside the condenser. Such a situation could not physically occur, but the model would tolerate such an answer. The resolution of this problem was to use three components to represent the condenser. With this approach the desired total UA could be specified for the three components and not have negative temperature differences within the components.

The three specific components we used were

- A rectifier module, to do the initial 15 percent of the condensation process. This module has a small coolant temperature rise and a large refrigerant temperature drop, leading to a large LMTD and a small UA.

- An analyzer module, to do the balance of the condensation. This module has small temperature differences on both coolant and refrigerant. As a result it has a small LMTD and a large UA.

- The final module is a heat exchanger module, used as a condensate subcooler. This module has a large LMTD and a small UA.

APPENDIX B.

LISTING OF THE COMPUTER MODEL

```
C*****************************************************************
C****                A   B   S   I   M                      *****
C*****************************************************************
C****     PROGRAM FOR MODULAR SIMULATION OF ABSORPTION SYSTEMS IN  *****
C****     VARYING CYCLE CONFIGURATIONS AND WORKING FLUID PAIRS     *****
C*****************************************************************
C****                  MAIN  PROGRAM              *****
C*****************************************************************
      IMPLICIT REAL*8(A-H,O-Z)
      DIMENSION  X(99),FUN(99),IIK(10),ICOP(30)
      DIMENSION  ANAME(12)
      CHARACTER*70 ATITLE
      CHARACTER*11 ANAME
      CHARACTER*8 FILENAME
      CHARACTER*1 FF
      COMMON /EQUAT/ LINE(99),NONLIN,NLIN,NE,NNL,ICOUNT,IAF(99),LIN
      COMMON /HEAT / KSUB(99),T(99),H(0:99),F(0:99),C(0:99),P(99),W(99),
     *               Q(30),IDUNIT(30),ISP(30,7),NSP,NUNITS,NUKT,NCONC,NFLOW,
     *               NPRESS,NW,ITER,MSGLVL
      COMMON / UAB / IHT(30),HT(30),UA(30),EFF(30),CAT(30),XLMTD(30),
     *               IPINCH(30),DEVL(30),DEVG(30)
      COMMON / VAR /ITFIX(99),IFFIX(0:99),ICFIX(99),IPFIX(99),IWFIX(99),
     *               IVART(99),IVARF(99),IVARC(99),IVARP(99),IVARW(99),
     *               IVT(99)  , IVF(99) , IVC(99) , IVP(99) , IVW(99) ,
     *              JT(16)   , JF(16)   , JC(16)  , JP(16)  , JW(16)
      COMMON / CON / CONV1 , CONV2 , CONV3 , CONV4
      COMMON / CN  / FMAX,TMAX,TMIN,CPP,TXN,FXC,CPT,CTT,FCPT,PMAX,IUFLAG
      EXTERNAL FCN
      DATA  ANAME / 'ABSORBER','DESORBER','HEAT EXGER','CONDENSER',
     *             'EVAPORATOR','VALVE','MIXER','SPLITTER',
     *              'RECTIFIER','ANALYSER','COMPRESSOR','PUMP'/
 1001 FORMAT(/,7X,' INPUT AND OUTPUT IN BRITISH UNITS ')
 1002 FORMAT(/,7X,' INPUT IN BRITISH UNITS --- OUTPUT IN SI UNITS ')
 1003 FORMAT(/,7X,' INPUT AND OUTPUT IN SI UNITS ')
 1004 FORMAT(/,7X,' INPUT IN SI UNITS --- OUTPUT IN BRITISH UNITS ')
 1005 FORMAT(/,7X,' BRITISH UNITS ARE :',/,
     *      7X,' TEMPERATURES      (T)  IN  DEG F    ',/,
     *      7X,' MASS FLOWRATES    (F)  IN  LBS/MIN   ',/,
     *      7X,' CONCENTRATIONS    (C)  IN  WEIGHT % ',/,
     *      7X,' ENTHALPIES        (H)  IN  BTU/LB   ',/,
     *      7X,' PRESSURES         (P)  IN  PSIA     ',/,
     *      7X,' HEAT QUANTITIES   (Q)  IN  BTU/MIN  ')
 1006 FORMAT(/,7X,' SI  UNITS ARE :',/,
     *      7X,' TEMPERATURES      (T)  IN  DEG C    ',/,
     *      7X,' MASS FLOWRATES    (F)  IN  KG/SEC   ',/,
     *      7X,' CONCENTRATIONS    (C)  IN  WEIGHT % ',/,
     *      7X,' ENTHALPIES        (H)  IN  KJ/KG    ',/,
     *      7X,' PRESSURES         (P)  IN  KPA      ',/,
     *      7X,' HEAT QUANTITIES   (Q)  IN  KW       ')
 1007 FORMAT(  7X,' USER TERMINATION ',/)
 1008 FORMAT(  7X,' IMPROPER INPUT PARAMETERS ',/)
 1011 FORMAT(  7X,' EUCLIDEAN NORM OF FUN IS LESS THAN FTOL ',/)
 1012 FORMAT(  7X,' RELATIVE ERROR BETWEEN TWO SUCCESSIVE ',/,
     *          7X,' ITERATES IS LESS THAN XTOL ',/)
```

```
1013 FORMAT(  7X,' EUCLIDEAN NORM OF FUN IS LESS THAN FTOL ',/,
    *           7X,' AND RELATIVE ERROR BETWEEN TWO SUCCESSIVE ',/,
    *           7X,' ITERATES IS LESS THAN XTOL ',/)
1014 FORMAT(  7X,' NO. OF CALLS TO FCN IS MORE THAN MAXFEV ',/)
1015 FORMAT(  7X,' ITERATION HAS FAILED TO REDUCE THE RESIDUALS ',/,
    *           7X,' BY 1% IN 20 CONSECUTIVE ITERATIONS ',/)
1016 FORMAT(  7X,' ITERATION SEEMS TO BE CONVERGING BUT THE ',/,
    *           7X,' DESIRED ACCURACY IS TOO STRINGENT OR THE ',/,
    *           7X,' CONVERGENCE IS TOO SLOW DUE TO A JACOBIAN ',/,
    *           7X,' SINGULAR NEAR THE ITERATES OR DUE TO BADLY ',/,
    *           7X,' SCALED VARIABLES ',/)
1017 FORMAT(  7X,' ITERATION IS NOT ABLE TO PROGRESS ANY ',/,
    *           7X,' FURTHER BECAUSE THE STEP BOUND IS TOO ',/,
    *           7X,' SMALL RELATIVE TO THE SIZE OF THE ITERATES ',/)
1030 FORMAT (1X,A65)
1031 FORMAT (/,7X,A65)
1040 FORMAT (4F10.1)
1041 FORMAT (/,7X,'SCALING PARAMETERS:  TMAX    TMIN    FMAX    PMAX'
    * /,25X,4F8.1)
1050 FORMAT (3I5,2D10.1,2I5)
1059 FORMAT (/,7X,' MAXFEV, MSGLVL : ',2I6 )
1060 FORMAT (7X,'TOLERANCES IN F, X : ',2(1PD12.1) )
1080 FORMAT (7I4)
1090 FORMAT(/,7X,'NO. OF UNITS: ',I5,/,7X,'NO. OF STATE POINTS: ',I5)
1100 FORMAT (/,7X,'UNIT INPUT ')
1110 FORMAT(3I5,F10.4,I5,2F10.4,I5)
1120 FORMAT(7X,3I5,F10.4,I5,2F10.4,I5)
1130 FORMAT(1H ,7X,7I4)
1140 FORMAT (A1,7X,'STATE POINT INPUT - STARTING VALUES')
1150 FORMAT (2I5,I4,F6.1,I4,F6.3,3(I4,F6.2))
1151 FORMAT (2I5,I4,F6.1,4(I4,F6.2))
1160 FORMAT (7X,2I5,I4,F6.1,I4,F8.3, 3(I4,F7.2) )
1165 FORMAT (/,7X, ' STARTING TEMPERATURES CHANGED BY CONSTRAINTS ' )
1170 FORMAT (/,7X, ' CONSTRAINTS NOT SATISFIED IN 50 ITERATIONS' )
1180 FORMAT (A1,7X,'STARTING TEMPERATURES AFTER CONSTRAINTS APPLIED')
1190 FORMAT (7X,I4,F10.1,I4)
1200 FORMAT(/,'       NO. OF VARIABLES          ',I5/
    *           '       NO. OF TEMPERATURES       ',I5/
    *           '       NO. OF CONCENTRATIONS     ',I5/
    *           '       NO. OF FLOWS              ',I5/
    *           '       NO. OF PRESSURES          ',I5/
    *           '       NO. OF VAPOR FRACTIONS    ',I5)
1210 FORMAT (A1,7X,'LAST ITERATION NO. IS ',I5
    *'  EUCLIDEAN NORM =',1PD12.3)
1220 FORMAT (7X,'IER = ',I5)
1230 FORMAT(1H ,7X,I5,1P2D12.4,I5)
1235 FORMAT(1H ,7X,I5,12X,1PD12.4,I5)
1240 FORMAT(A1,'    STATE  TEMPER.   ENTHALPY  FLOW RATE',
    *           '  CONCENTR.   PRESSURE  VAPOR FR.'/'    POINT')
1250 FORMAT(1H ,2X,I4,1P8D11.4)
1270 FORMAT(A1,7X,' NO.    TYPE',9X,
    *       'UA',10X,'EFF',9X,'CAT',8X,'LMTD')
1280 FORMAT (5X,I5,2X,A11,4(2X,1PD10.4))
1290 FORMAT(/,7X,' NO.    TYPE     HEAT TRANSFER',
```

```
     *                4X,' DEVL',10X,'DEVG',4X,'IPINCH')
 1300 FORMAT (5X,I5,2X,A11,1X,1PD11.4,4X,1PD10.3,4X,1PD10.3,4X,I2)
 1310 FORMAT (' NAME OF INPUT AND OUTPUT FILES: ',$)
C 1320 FORMAT (' NAME OF OUTPUT FILE: ',$)
 1330 FORMAT (A8)
 1340 FORMAT (/,7X,'COP = ',F6.4)
 1350 FORMAT (/'      TOTAL NO. OF EQUATIONS     ',I5/
     *          '      NO. OF NONLINEAR EQUATIONS ',I5/
     *          '      NO. OF LINEAR EQUATIONS    ',I5/
     *          '      NO. OF REDUNDANT EQUATIONS ',I5,9X,A1)
 1360 FORMAT (30X,A8)
 1370 FORMAT (A10)
 1400 FORMAT (I4)
 1420 FORMAT (F7.2)
 1430 FORMAT (F7.3)
 1440 FORMAT (F8.4)
 1450 FORMAT (F7.5)
C*********************************************************************
C****              SETTING INPUT AND OUTPUT FILES        *****
C*********************************************************************
      PRINT 1310
      READ(*,1330) FILENAME
C      PRINT 1320
C      READ(*,1330) FILEOUT
      OPEN (UNIT=5, FILE=FILENAME//'.NEW', STATUS='OLD')
      OPEN (UNIT=6, FILE=FILENAME//'.OUT', STATUS='NEW')
      WRITE(6,1360) FILENAME
C*********************************************************************
C****               READING AND PRINTING INPUT DATA          *****
C*********************************************************************
      FF = CHAR(12)
      READ (5,1030) ATITLE
      WRITE (6,1031) ATITLE
      READ (5,1040) TMAX,TMIN,FMAX,PMAX
      WRITE (6,1041) TMAX,TMIN,FMAX,PMAX
      READ (5,1050)  MAXFEV,MSGLVL,IUFLAG,FTOL,XTOL,NEWDAT,ISPDOUT
      IF(IUFLAG.LE.2) GO TO 10
      TMAX=1.8*TMAX+32.0
      TMIN=1.8*TMIN+32.0
      FMAX=FMAX/0.0075
      PMAX=PMAX/6.894
   10 CPP=0.5
      CTT=100.0
      TXN=TMAX-TMIN
      IF(TXN.LE.0.0) TXN=50.0
      IF(FMAX.LE.0.0) FMAX=10.0
      IF(PMAX.LE.0.0) PMAX=10.0
      FXC=FMAX*CTT
      CPT=CPP*TXN
      FCPT=CPT*FMAX
      GO TO (1,2,3,4),IUFLAG
    1 WRITE(6,1001)
      GO TO 5
    2 WRITE(6,1002)
```

```
      GO TO 5
    3 WRITE(6,1003)
      GO TO 5
    4 WRITE(6,1004)
    5 IF (IUFLAG.EQ.3) GO TO 6
      WRITE(6,1005)
    6 IF (IUFLAG.EQ.1) GO TO 7
      WRITE(6,1006)
    7 IF(FTOL.LT.1.0D-10) FTOL=1.0D-10
      IF(XTOL.LT.1.0D-10) XTOL=1.0D-10
      IF(MAXFEV.LT.10) MAXFEV=100
      WRITE(6,1059) MAXFEV, MSGLVL
      WRITE(6,1060) FTOL,XTOL
      READ (5,1080) NUNITS,NSP
      WRITE(6,1090) NUNITS,NSP
      WRITE (6,1100)
      DO 100 NUNIT=1,NUNITS
      READ (5,1110) NU,IDUNIT(NUNIT),IHT(NUNIT),HT(NUNIT),
     *           IPINCH(NUNIT),DEVL(NUNIT),DEVG(NUNIT),ICOP(NUNIT)
      WRITE(6,1120) NUNIT,IDUNIT(NUNIT),IHT(NUNIT),HT(NUNIT),
     *           IPINCH(NUNIT),DEVL(NUNIT),DEVG(NUNIT),ICOP(NUNIT)
      READ (5,1080) (ISP(NUNIT,I),I=1,7)
      WRITE(6,1130) (ISP(NUNIT,I),I=1,7)
  100 CONTINUE
      WRITE(6,1140) FF
      DO 200 I=1,NSP
      READ (5,1150) NDUM,KSUB(I),ITFIX(I),T(I),IFFIX(I),F(I),
     *             ICFIX(I),C(I),IPFIX(I),P(I),IWFIX(I),W(I)
      WRITE(6,1160) NDUM,KSUB(I),ITFIX(I),T(I),IFFIX(I),F(I),
     *             ICFIX(I),C(I),IPFIX(I),P(I),IWFIX(I),W(I)
      IIK(KSUB(I)) = 1
  200 CONTINUE
      IF(IIK(2).EQ.1) CALL DATAB2
C*********************************************************************
C****                    UNIT CONVERSION                    ****
C*********************************************************************
C****         PRESSURE CONVERSION    1 PSI= 6.894 KPA        *****
C****        ENTHALPY CONVERSION      1 BTU/LB = 2.326 KJ/KG      *****
C*********************************************************************
      CONV1= 6.894
      CONV2= 1.0/6.894
      CONV3 =  2.326
      CONV4 = 1.0/2.326
      IF(IUFLAG.LE.2) GO TO 227
      DO 224 I=1,NUNITS
      IF(IHT(I).EQ.1) THEN
          HT(I)=HT(I)/(2.326*0.0075*1.8)
      ELSE IF (IHT(I).EQ.2) THEN
          HT(I)=HT(I)
      ELSE IF (IHT(I).EQ.5) THEN
          HT(I)=HT(I)/(2.326*0.0075)
      ELSE
          HT(I)=HT(I)*1.8
      END IF
```

```
      DEVL(I)=DEVL(I)*1.8
      DEVG(I)=DEVG(I)*1.8
  224 CONTINUE
      DO 225 I=1,NSP
      T(I)=T(I)*1.8+32.0
      F(I)=F(I)/0.0075
      P(I)=P(I)/6.894
  225 CONTINUE
  227 IV = 0
      ITER=0
      LIN=0
      NONLIN= 0
      ICOUNT= 0
  230 IALTER= 0
      ICOUNT= ICOUNT + 1
      CALL FCN1(FUN,1,IALTER)
      IF (ICOUNT .GT. 50) GO TO 240
      IF (IALTER .NE. 0) THEN
          WRITE(6,1165)
          GO TO 230
      END IF
  240 IF (ICOUNT .GT. 50 ) WRITE(6,1170)
      IF(MSGLVL.NE.0) WRITE(6,1180) FF
      DO 250 I=1,NSP
      IVT(I)= 0
      IVC(I)= 0
      IVF(I)= 0
      IVP(I)= 0
      IVW(I)= 0
      IVART(I)=0
      IVARC(I)=0
      IVARF(I)=0
      IVARP(I)=0
      IVARW(I)=0
      IF(MSGLVL.NE.0) WRITE(6,1190) I,T(I), ITFIX(I)
  250 CONTINUE
      DO 260 J=1,16
      JT(J) = 0
      JC(J) = 0
      JF(J) = 0
      JP(J) = 0
      JW(J) = 0
  260 CONTINUE
      DO 270 I=1,99
  270 LINE(I)= -1
      DO 290 I=1,NSP
      IT= ITFIX(I)
      IF( IT .EQ. 0) GO TO 290
      IF( JT(IT) .EQ. 0)  GO TO 280
      IVART(I)= JT(IT)
      GO TO 290
  280 IV = IV +1
      IF( IT.NE. 1) JT(IT)=IV
      IVT(IV ) = I
```

```
      IVART(I)= IV
      X(IV ) = (T(I)-TMIN)/TXN
  290 CONTINUE
      NUKT= IV
      DO 310 I=1,NSP
      IC= ICFIX(I)
      IF (IC .EQ. 0) GO TO 310
      IF (JC (IC) .EQ. 0) GO TO 300
      IVARC(I)= JC(IC)
      GO TO 310
  300 IV= IV + 1
      IF( IC.NE. 1) JC(IC)=IV
      IVARC(I)= IV
      IVC(IV)= I
      X(IV)= C(I)/CTT
  310 CONTINUE
      NCONC= IV- NUKT
      DO 330 I=1,NSP
      IFF= IFFIX(I)
      IF (IFF .EQ. 0) GO TO 330
      IF (JF(IFF) .EQ. 0) GO TO 320
      IVARF(I)= JF(IFF)
      GO TO 330
  320 IV= IV + 1
      IF( IFF.NE. 1) JF(IFF)=IV
      IVARF(I)= IV
      IVF(IV)= I
      X(IV)= F(I)/FMAX
  330 CONTINUE
      NFLOW= IV-(NUKT+NCONC)
      DO 350 I=1,NSP
      IP= IPFIX(I)
      IF (IP .EQ. 0) GO TO 350
      IF ( JP(IP) .EQ. 0) GO TO 340
      IVARP(I)= JP(IP)
      GO TO 350
  340 IV= IV + 1
      IF( IP.NE. 1) JP(IP)=IV
      IVARP(I)= IV
      IVP(IV)= I
      X(IV)= P(I)/PMAX
  350 CONTINUE
      NPRESS= IV-(NUKT+NCONC+ NFLOW)
      DO 370 I=1,NSP
      IW= IWFIX(I)
      IF (IW .EQ. 0) GO TO 370
      IF ( JW(IW) .EQ. 0) GO TO 360
      IVARW(I)= JW(IW)
      GO TO 370
  360 IV= IV + 1
      IF( IW.NE. 1) JW(IW)=IV
      IVARW(I)= IV
      IVW(IV)= I
      X(IV)= W(I)
```

```
  370 CONTINUE
      NW = IV-(NUKT+NCONC+ NFLOW+ NPRESS)
      NV = IV
      WRITE(6,1200) NV,NUKT,NCONC,NFLOW,NPRESS,NW
      N = NONLIN+LIN
      NR = N - NV
      WRITE(6,1350) N,NONLIN,LIN,NR,FF
C*********************************************************************
C****            ACTIVATING THE SOLVER ROUTINE          *****
C*********************************************************************
C      LWA=(N*(3*N+7))/2
      CALL HYBRD1(N,FCN,X,FUN,FTOL,XTOL,MAXFEV,IER,FN)
C*********************************************************************
C****             PRINTING FINAL RESULTS                          *****
C*********************************************************************
      WRITE(6,1210) FF,ITER,FN
      WRITE(6,1220) IER
      IF(IER.GT.0) GO TO 20
      IF(IER.LT.0) WRITE(6,1007)
      IF(IER.EQ.0) WRITE(6,1008)
   20 GO TO (21,22,23,24,25,26,27,27),IER
   21 WRITE(6,1011)
      GO TO 28
   22 WRITE(6,1012)
      GO TO 28
   23 WRITE(6,1013)
      GO TO 28
   24 WRITE(6,1014)
      GO TO 28
   25 WRITE(6,1015)
      GO TO 28
   26 WRITE(6,1016)
      GO TO 28
   27 WRITE(6,1017)
   28 IF(MSGLVL.EQ.0) GOTO 30
      DO 29 I=1,N
      IF (I.LE.NV) THEN
         WRITE(6,1230) I,X(I),FUN(I),LINE(I)
      ELSE
         WRITE(6,1235) I,FUN(I),LINE(I)
      ENDIF
   29 CONTINUE
   30 CALL FCN1(FUN,5,IALTER)
      IF(IUFLAG.EQ.1.OR.IUFLAG.EQ.4) GO TO 375
      DO 242 I=1,NUNITS
      CAT(I)=CAT(I)/1.8
      DEVL(I)=DEVL(I)/1.8
      DEVG(I)=DEVG(I)/1.8
      XLMTD(I)=XLMTD(I)/1.8
      UA(I)=UA(I)*(2.326*0.0075*1.8)
      Q(I)=Q(I)*(2.326*0.0075)
  242 CONTINUE
      DO 252 I=1,NSP
      T(I)=(T(I)-32.0)/1.8
```

```
      H(I)=H(I)*2.326
      F(I)=F(I)*0.0075
      P(I)=P(I)*6.894
  252 CONTINUE
  375 WRITE(6,1240) FF
      DO 380 I=1,NSP
      WRITE(6,1250) I,T(I),H(I),F(I),C(I),P(I),W(I)
  380 CONTINUE
      WRITE(6,1360) FILENAME
      WRITE(6,1270) FF
      DO 390 I=1,NUNITS
      ID= IDUNIT(I)
  390 WRITE(6,1280) I,ANAME(ID),DABS(UA(I)),EFF(I),CAT(I),XLMTD(I)
      WRITE(6,1290)
      DO 400 I=1,NUNITS
      ID= IDUNIT(I)
  400 WRITE(6,1300) I,ANAME(ID),Q(I),DEVL(I),DEVG(I),IPINCH(I)
      COPN=0.0
      COPD=0.0
      DO 410 NUNIT=1,NUNITS
      IF(ICOP(NUNIT).EQ.1) COPN=COPN+Q(NUNIT)
      IF(ICOP(NUNIT).EQ.-1) COPD=COPD+Q(NUNIT)
  410 CONTINUE
      IF(COPN.LE.0.0.OR.COPD.LE.0.0) GOTO 420
      COP=COPN/COPD
      WRITE(6,1340) COP
      WRITE(6,1360) FILENAME
  420 CONTINUE
      IF(NEWDAT.EQ.0) GOTO 470
      OPEN (UNIT=7, FILE='NEW.DAT', STATUS='NEW')
      WRITE (7,1030) ATITLE
      WRITE (7,1040) TMAX,TMIN,FMAX,PMAX
      WRITE (7,1050) MAXFEV,MSGLVL,IUFLAG,FTOL,XTOL,NEWDAT,ISPDOUT
      WRITE (7,1080) NUNITS,NSP
      DO 450 NUNIT=1,NUNITS
      WRITE(7,1110) NUNIT,IDUNIT(NUNIT),IHT(NUNIT),HT(NUNIT),
     *          IPINCH(NUNIT),DEVL(NUNIT),DEVG(NUNIT),ICOP(NUNIT)
      WRITE(7,1080) (ISP(NUNIT,I),I=1,7)
  450 CONTINUE
      DO 460 I=1,NSP
      IF(F(I).LT.100.) THEN
         WRITE(7,1150) I,KSUB(I),ITFIX(I),T(I),IFFIX(I),F(I),
     *            ICFIX(I),C(I),IPFIX(I),P(I),IWFIX(I),W(I)
      ELSE
         WRITE(7,1151) I,KSUB(I),ITFIX(I),T(I),IFFIX(I),F(I),
     *            ICFIX(I),C(I),IPFIX(I),P(I),IWFIX(I),W(I)
      END IF
  460 CONTINUE
      CLOSE (UNIT = 7)
  470 IF(ISPDOUT.EQ.0) GOTO 500
      OPEN (UNIT=8, FILE=FILENAME//'.SPD', STATUS='NEW')
      WRITE(8,1370) CHAR(34)//FILENAME//CHAR(34)
      WRITE(8,1400) NSP
      WRITE(8,1400) NUNITS
```

```
      DO 480 I=1,NSP
      WRITE(8,1400) I
      WRITE(8,1420) P(I)
      WRITE(8,1420) T(I)
      WRITE(8,1430) C(I)
      WRITE(8,1440) F(I)
  480 CONTINUE
      DO 490 I=1,NUNITS
      WRITE(8,1400) I
      WRITE(8,1430) UA(I)
      WRITE(8,1450) EFF(I)
      WRITE(8,1430) CAT(I)
      WRITE(8,1400) IPINCH(I)
      WRITE(8,1430) XLMTD(I)
      WRITE(8,1420) Q(I)
  490 CONTINUE
      WRITE(8,1440) COP
      CLOSE (UNIT = 8)
  500 CONTINUE
      CLOSE (UNIT=5)
      CLOSE (UNIT=6)
      STOP
      END
C*********************************************************************
      SUBROUTINE FCN(N,XX,XFUN,IER)
C*********************************************************************
      IMPLICIT REAL*8(A-H,O-Z)
      DIMENSION X(99),FUN(99)
      DIMENSION XX(N),XFUN(N)
      COMMON /EQUAT/ LINE(99),NONLIN,NLIN,NE,NNL,ICOUNT,IAF(99),LIN
      COMMON /HEAT / KSUB(99),T(99),H(0:99),F(0:99),C(0:99),P(99),W(99),
     *              Q(30),IDUNIT(30),ISP(30,7),NSP,NUNITS,NUKT,NCONC,NFLOW,
     *              NPRESS,NW,ITER,MSGLVL
      COMMON / UAB / IHT(30),HT(30),UA(30),EFF(30),CAT(30),XLMTD(30),
     *               IPINCH(30),DEVL(30),DEVG(30)
      COMMON / VAR /ITFIX(99),IFFIX(0:99),ICFIX(99),IPFIX(99),IWFIX(99),
     *               IVART(99),IVARF(99),IVARC(99),IVARP(99),IVARW(99),
     *               IVT(99)  , IVF(99) , IVC(99) , IVP(99) , IVW(99) ,
     *              JT(16)   , JF(16)   , JC(16)  , JP(16)  , JW(16)
      COMMON / CON / CONV1 , CONV2 , CONV3 , CONV4
      COMMON / CN  / FMAX,TMAX,TMIN,CPP,TXN,FXC,CPT,CTT,FCPT,PMAX,IUFLAG
C*********************************************************************
 1010 FORMAT (//,7X,'ITERATION NO. ',I5)
 1020 FORMAT(' STATE TEMPER.  ENTHALPY  FLOWRATE',
     *        '  CONCENT.   PRESS.  VAPOR FRAC.  FUN '/' POINT')
 1030 FORMAT(1X,I2,1P7D10.3,I5)
 1035 FORMAT(1X,I2,60X,1PD10.3,I5)
      DO 10 I = 1,N
      X(I) = XX(I)
      FUN(I) = XFUN(I)
   10 CONTINUE
      IV2 = NUKT
      IF(NUKT.LT. 1) GO TO 122
      DO 100 IV=1,NUKT
```

```
      T(IVT(IV)) = X(IV)*TXN+TMIN
  100 CONTINUE
      DO 120 I=1,NSP
      IF (ITFIX(I) .LT. 2) GO TO 120
      DO 110 J=I,NSP
  110 IF (ITFIX(J) .EQ. ITFIX(I) ) T(J)= T(I)
  120 CONTINUE
  122 IF(NCONC.LT. 1) GO TO 152
      IV1= NUKT + 1
      IV2= IV1 + NCONC - 1
      DO 130 IV= IV1,IV2
      IF ( X(IV) .LT. 0.0) X(IV)=-X(IV)
      IF ( X(IV) .GT. 1.0) X(IV)= 1.0/X(IV)
  130 C(IVC(IV))= X(IV)*CTT
      DO 150 I=1,NSP
      IF (ICFIX(I) .LT. 2) GO TO 150
      DO 140 J= I,NSP
  140 IF (ICFIX(J) .EQ. ICFIX(I) ) C(J)= C(I)
  150 CONTINUE
  152 IF(NFLOW.LT. 1) GO TO 182
      IV1= IV2 + 1
      IV2= IV1 + NFLOW - 1
      DO 160 IV= IV1,IV2
C      IF ( X(IV) .LT. 0.0) X(IV)=-X(IV)
  160 F(IVF(IV))= X(IV)*FMAX
      DO 180 I=1,NSP
      IF (IFFIX(I) .LT. 2) GO TO 180
      DO 170 J= I,NSP
  170 IF (IFFIX(J) .EQ. IFFIX(I) ) F(J)= F(I)
  180 CONTINUE
  182 IF(NPRESS.LT. 1) GO TO 212
      IV1= IV2 + 1
      IV2= IV1 + NPRESS - 1
      DO 190 IV= IV1,IV2
      IF ( X(IV) .LT. 0.0) X(IV)=-X(IV)
  190 P(IVP(IV))= X(IV)*PMAX
      DO 210 I=1,NSP
      IF (IPFIX(I) .LT. 2) GO TO 210
      DO 200 J= I,NSP
  200 IF (IPFIX(J) .EQ. IPFIX(I) ) P(J)= P(I)
  210 CONTINUE
  212 IF(NW.LT. 1) GO TO 242
      IV1= IV2 + 1
      IV2= IV1 + NW  - 1
      DO 220 IV= IV1,IV2
      IF ( X(IV) .LT. 0.0) X(IV)=-X(IV)
      IF ( X(IV) .GT. 1.0) X(IV)= 1.0/X(IV)
  220 W(IVW(IV))= X(IV)
      DO 240 I=1,NSP
      IF (IWFIX(I) .LT. 2) GO TO  240
      DO 230 J= I,NSP
  230 IF (IWFIX(J) .EQ. IWFIX(I) ) W(J)= W(I)
  240 CONTINUE
  242 ITER= ITER+ 1
```

```
      NE= 0
      NNL= 0
      NLIN= NONLIN
      DO 260 I=1,99
  260 FUN(I)= 0.0
      IALTER=0
      ICOUN = 0
  270 IALT  = 0
      ICOUN = ICOUN + 1
      CALL FCN1(FUN,2,IALT)
      IF (ICOUN .GT. 10) GO TO 280
      IF (IALT .EQ. 0) GO TO 280
      IALTER=1
      GO TO 270
  280 IF (IALTER.EQ. 0) GO TO 300
      DO 290 I=1,NSP
      IF (IVART(I) .EQ.0) GO TO 290
      X(IVART(I))= (T(I)-TMIN)/TXN
  290 CONTINUE
  300 CONTINUE
      CALL ENTHAL
      CALL FCN1(FUN,3,IALTER)
      NE= NLIN
      CALL REDUN (FUN,N)
      IF (MSGLVL .EQ. 0) GO TO 310
      ITT=ITER/MSGLVL * MSGLVL
      IF (ITT .NE. ITER) GO TO 310
      NPR= N
      IF (NSP.GT. N) NPR=NSP
      WRITE(6,1010) ITER
      WRITE(6,1020)
      DO 305 I=1,NPR
      IF (I.LE.NSP) THEN
        WRITE(6,1030) I,T(I),H(I),F(I),C(I),P(I),W(I),FUN(I),LINE(I)
      ELSE
        WRITE(6,1035) I,FUN(I),LINE(I)
      ENDIF
  305 CONTINUE
  310 CONTINUE
      DO 20 I = 1,N
      XX(I) = X(I)
      XFUN(I) = FUN(I)
   20 CONTINUE
      RETURN
      END
C*********************************************************************
      SUBROUTINE FCN1(FUN,JJF,IALTER)
C*********************************************************************
      IMPLICIT REAL*8(A-H,O-Z)
      DIMENSION FUN(99)
      COMMON /EQUAT/ LINE(99),NONLIN,NLIN,NE,NNL,ICOUNT,IAF(99),LIN
      COMMON /HEAT / KSUB(99),T(99),H(0:99),F(0:99),C(0:99),P(99),W(99),
     *               Q(30),IDUNIT(30),ISP(30,7),NSP,NUNITS,NUKT,NCONC,NFLOW,
     *               NPRESS,NW,ITER,MSGLVL
```

```
      COMMON / UAB / IHT(30),HT(30),UA(30),EFF(30),CAT(30),XLMTD(30),
     *               IPINCH(30),DEVL(30),DEVG(30)
      COMMON / VAR /ITFIX(99),IFFIX(0:99),ICFIX(99),IPFIX(99),IWFIX(99),
     *               IVART(99),IVARF(99),IVARC(99),IVARP(99),IVARW(99),
     *               IVT(99)  , IVF(99) , IVC(99) , IVP(99) , IVW(99) ,
     *              JT(16)   , JF(16)   , JC(16)  , JP(16)  , JW(16)
C*********************************************************************
      DO 500 I=1,NUNITS
      IUNIT = I
      ID = IDUNIT(I)
      GO TO(10,20,30,40,50,60,70,80,90,100,110,120),ID
   10 CALL ABSORB(IUNIT,ISP(I,1),ISP(I,2),ISP(I,3),ISP(I,4),ISP(I,5),
     *       ISP(I,6),FUN,JJF,IALTER)
      GO TO 500
   20 CALL DESORB(IUNIT,ISP(I,1),ISP(I,2),ISP(I,3),ISP(I,4),ISP(I,5),
     *       ISP(I,6),FUN,JJF,IALTER)
      GO TO 500
   30 CALL HEX(IUNIT,ISP(I,1),ISP(I,2),ISP(I,3),ISP(I,4),
     *             FUN,JJF,IALTER)
      GO TO 500
   40 CALL COND(IUNIT,ISP(I,1),ISP(I,2),ISP(I,3),ISP(I,4),ISP(I,5),
     *             FUN,JJF,IALTER)
      GO TO 500
   50 CALL EVAP(IUNIT,ISP(I,1),ISP(I,2),ISP(I,3),ISP(I,4),ISP(I,5),
     *             FUN,JJF,IALTER)
      GO TO 500
   60 CALL VALVE(IUNIT,ISP(I,1),ISP(I,2),FUN,JJF)
      GO TO 500
   70 CALL MIX(IUNIT,ISP(I,1),ISP(I,2),ISP(I,3),ISP(I,4),FUN,JJF)
      GO TO 500
   80 CALL SPLIT(IUNIT,ISP(I,1),ISP(I,2),ISP(I,3),ISP(I,4),FUN,JJF)
      GO TO 500
   90 CALL RECT(IUNIT,ISP(I,1),ISP(I,2),ISP(I,3),ISP(I,4),ISP(I,5),
     *       ISP(I,6),FUN,JJF,IALTER)
      GO TO 500
  100 CALL ANALYS(IUNIT,ISP(I,1),ISP(I,2),ISP(I,3),ISP(I,4),ISP(I,5),
     *       ISP(I,6),ISP(I,7),FUN,JJF,IALTER)
      GO TO 500
  110 CALL COMP(IUNIT,ISP(I,1),ISP(I,2),ISP(I,3),FUN,JJF)
      GO TO 500
  120 CALL PUMP(IUNIT,ISP(I,1),ISP(I,2),ISP(I,3),FUN,JJF)
  500 CONTINUE
      RETURN
      END
C*********************************************************************
      SUBROUTINE REDUN (FUN,N)
C*********************************************************************
      IMPLICIT REAL*8(A-H,O-Z)
      DIMENSION FUN(99)
      COMMON /EQUAT/ LINE(99),NONLIN,NLIN,NE,NNL,ICOUNT,IAF(99),LIN
      COMMON /HEAT / KSUB(99),T(99),H(0:99),F(0:99),C(0:99),P(99),W(99),
     *              Q(30),IDUNIT(30),ISP(30,7),NSP,NUNITS,NUKT,NCONC,NFLOW,
     *              NPRESS,NW,ITER,MSGLVL
C*********************************************************************
```

```
 1010 FORMAT ( /,7X,'TOTAL NO. OF EQUATIONS OR FUNS   ',I5,
     *          /,7X,'NO. OF NON-LINEAR EQUATIONS      ',I5,
     *          /,7X,'NO. OF VARIABLES                 ',I5,
     *          /,7X,'NO. OF REDUNDANT FUNS            ',I5)
      NREDUN= NE- N
      N1= NONLIN + 1
      IF(N1.GT.1) RETURN
      L = NE + 1
      IF (ITER.GT. 1 ) GO TO 10
      IF (MSGLVL.EQ. 0 ) GO TO 10
      WRITE(6,1010) NE,NONLIN,N,NREDUN
   10 CONTINUE
      IF(NREDUN.EQ.0) RETURN
      DO 30 NR= 1,NREDUN
      FACTOR= 0.0
      L= L-1
      IF (L .EQ. 1) GO TO 30
      LL1= L-1
      DO 20 J= N1,LL1
      FACTOR= FACTOR + 0.1
   20 FUN(J)= FUN(J) + FUN(L)* FACTOR
      FUN(L)= 0.0
   30 CONTINUE
      RETURN
      END
C*********************************************************************
      SUBROUTINE CONS(IL,IU,I)
C*********************************************************************
      IMPLICIT REAL*8(A-H,O-Z)
      COMMON /HEAT / KSUB(99),T(99),H(0:99),F(0:99),C(0:99),P(99),W(99),
     *              Q(30),IDUNIT(30),ISP(30,7),NSP,NUNITS,NUKT,NCONC,NFLOW,
     *              NPRESS,NW,ITER,MSGLVL
      COMMON / VAR /ITFIX(99),IFFIX(0:99),ICFIX(99),IPFIX(99),IWFIX(99),
     *               IVART(99),IVARF(99),IVARC(99),IVARP(99),IVARW(99),
     *               IVT(99)  , IVF(99) , IVC(99) , IVP(99) , IVW(99) ,
     *              JT(16)   , JF(16)   , JC(16)  , JP(16)  , JW(16)
C*********************************************************************
      I=I+1
      IF(T(IU).GT.T(IL)) RETURN
      IF(ITFIX(IU).EQ.ITFIX(IL).AND.ITFIX(IU).NE.1) RETURN
      I=I-1
      ST=0.001
      IF(ITFIX(IL).EQ.0) GO TO 10
      IF(ITFIX(IU).EQ.0) GO TO 20
      TTT=(T(IU)+T(IL))/2.0
      T(IU)=TTT+ST
      T(IL)=TTT-ST
      GO TO 30
   10 T(IU)=T(IL)+ST
      GO TO 50
   20 T(IL)=T(IU)-ST
   30 IF (ITFIX(IL) .LT. 2) GO TO 50
      DO 40 J=1,NSP
   40 IF (ITFIX(J) .EQ. ITFIX(IL) ) T(J)= T(IL)
```

```
   50 IF (ITFIX(IU) .LT. 2) RETURN
      DO 60 J=1,NSP
   60 IF (ITFIX(J) .EQ. ITFIX(IU) ) T(J)= T(IU)
      RETURN
      END
C*********************************************************************
      SUBROUTINE ABSORB(IUNIT,I1,I2,I3,I4,I5,I6,FUN,JFLAG,IALTER)
C*********************************************************************
      IMPLICIT REAL*8(A-H,O-Z)
      DIMENSION FUN(99)
      COMMON /EQUAT/ LINE(99),NONLIN,NLIN,NE,NNL,ICOUNT,IAF(99),LIN
      COMMON /HEAT / KSUB(99),T(99),H(0:99),F(0:99),C(0:99),P(99),W(99),
     *               Q(30),IDUNIT(30),ISP(30,7),NSP,NUNITS,NUKT,NCONC,NFLOW,
     *               NPRESS,NW,ITER,MSGLVL
      COMMON / UAB / IHT(30),HT(30),UA(30),EFF(30),CAT(30),XLMTD(30),
     *                IPINCH(30),DEVL(30),DEVG(30)
      COMMON / VAR /ITFIX(99),IFFIX(0:99),ICFIX(99),IPFIX(99),IWFIX(99),
     *               IVART(99),IVARF(99),IVARC(99),IVARP(99),IVARW(99),
     *               IVT(99)  , IVF(99) , IVC(99) , IVP(99) , IVW(99) ,
     *              JT(16)   , JF(16)   , JC(16)  , JP(16)  , JW(16)
      COMMON / CN  / FMAX,TMAX,TMIN,CPP,TXN,FXC,CPT,CTT,FCPT,PMAX,IUFLAG
C*********************************************************************
C      IF(IHT(IUNIT).LT.5) GOTO 10
C      Q(IUNIT) = HT(IUNIT)
C      RETURN
   10 IF(I6.EQ.0) I6=I1
      GO TO(100,200,200,400,500),JFLAG
  100 IF( ICOUNT .NE. 1 ) GO TO 200
      LIN=LIN+2
      NONLIN=NONLIN+ 1
      IF(ICFIX(I1).EQ.ICFIX(I6).AND.ICFIX(I1).NE.1) GO TO 150
      IF(ITFIX(I1).EQ.ITFIX(I6).AND.ITFIX(I1).NE.1) GO TO 150
      NONLIN=NONLIN+ 2
  150 IF(F(I3).EQ.0.0.AND.IFFIX(I3).EQ.0) GO TO 200
      IF(F(I4).EQ.0.0.AND.IFFIX(I4).EQ.0) GO TO 200
      NONLIN=NONLIN+ 2
      IF (IHT(IUNIT).EQ.0) NONLIN = NONLIN -1
  200 IF(F(I3).EQ.0.0.AND.IFFIX(I3).EQ.0) GO TO 250
      IF(F(I4).EQ.0.0.AND.IFFIX(I4).EQ.0) GO TO 250
      ICAB = 0
      CALL CONS(I3,I4,ICAB)
      CALL CONS(I4,I6,ICAB)
      CALL CONS(I3,I5,ICAB)
      GOTO 260
  250 ICAB = 3
  260 CALL CONS(I5,I6,ICAB)
      IF(ICAB .EQ.4 ) GO TO 300
      IALTER= 1
      GO TO 200
  300 CONTINUE
      IF(JFLAG.NE.3) RETURN
  400 NLIN= NLIN+1
      LINE(NLIN)= IUNIT
      FUN(NLIN)= (F(I1)+F(I2)-F(I5))/FMAX
```

```
      NLIN= NLIN+ 1
      LINE(NLIN)= IUNIT
C  ADDED WHEN C(I1) MADE LIQUID CONC. WHEN VAPOR FRACTION < 1  GRW   8/12/93

      CALL EQB (P(I1),CVAP,T(I1),HVAP,2,0,KSUB(I1))
      FUN(NLIN)=(F(I1)*(C(I1)*(1.D00-W(I1))+CVAP*W(I1))
     +          +F(I2)*C(I2)-F(I5)*C(I5))/FXC
      NNL= NNL+ 1
      LINE(NNL)=-IUNIT
      CALL EQB (P(I2), C(I5), T5E,H5E,1,0,KSUB(I5))
      FUN(NNL) = (T5E-T(I5)+DEVL(IUNIT))/TXN
      IF(ICFIX(I1).EQ.ICFIX(I6).AND.ICFIX(I1).NE.1) GO TO 450
      IF(ITFIX(I1).EQ.ITFIX(I6).AND.ITFIX(I1).NE.1) GO TO 450
      NNL=NNL+1
      LINE(NNL)=-IUNIT
      CALL EQB (P(I2),C(I6),T6E,H6E,1,0,KSUB(I6))
      FUN(NNL) = (T6E-T(I6))/TXN
      NNL=NNL+1
      LINE(NNL)=-IUNIT
      FUN(NNL)=(  (H(I1)-H(I2))*(C(I6)-C(I1))-
     *           (H(I6)-H(I1))*(C(I1)-C(I2))  )/
     *           (CPT*CTT)
      IF((C(I6)-C(I2)).EQ.0.0) GO TO 500
      F(I6)=F(I1)*(C(I1)-C(I2))/(C(I6)-C(I2))
      GOTO 500
  450 F(I6)=F(I1)
  500 QAN = F(I5)*H(I5)-F(I1)*H(I1)-F(I2)*H(I2)
      IF(F(I3).EQ.0.0.AND.IFFIX(I3).EQ.0) GO TO 550
      IF(F(I4).EQ.0.0.AND.IFFIX(I4).EQ.0) GO TO 550
      QAP = F(I3)*(H(I4)-H(I3))
      CALL QHEAT(IUNIT,T(I6),T(I5),T(I3),T(I4),FUN,QA,QAP,QAN,JFLAG)
  550 Q(IUNIT) = -QAN
      RETURN
      END
C*********************************************************************
      SUBROUTINE DESORB(IUNIT,I1,I2,I3,I4,I5,I6,FUN,JFLAG,IALTER)
C*********************************************************************
      IMPLICIT REAL*8(A-H,O-Z)
      DIMENSION FUN(99)
      COMMON /EQUAT/ LINE(99),NONLIN,NLIN,NE,NNL,ICOUNT,IAF(99),LIN
      COMMON /HEAT / KSUB(99),T(99),H(0:99),F(0:99),C(0:99),P(99),W(99),
     *               Q(30),IDUNIT(30),ISP(30,7),NSP,NUNITS,NUKT,NCONC,NFLOW,
     *               NPRESS,NW,ITER,MSGLVL
      COMMON / UAB / IHT(30),HT(30),UA(30),EFF(30),CAT(30),XLMTD(30),
     *               IPINCH(30),DEVL(30),DEVG(30)
      COMMON / VAR /ITFIX(99),IFFIX(0:99),ICFIX(99),IPFIX(99),IWFIX(99),
     *               IVART(99),IVARF(99),IVARC(99),IVARP(99),IVARW(99),
     *               IVT(99)  , IVF(99) , IVC(99) , IVP(99) , IVW(99) ,
     *               JT(16)   , JF(16)  , JC(16)  , JP(16)  , JW(16)
      COMMON / CN  / FMAX,TMAX,TMIN,CPP,TXN,FXC,CPT,CTT,FCPT,PMAX,IUFLAG
C*********************************************************************
   10 IF(I6.EQ.0) I6=I1
      GO TO(100,200,200,400,500),JFLAG
  100 IF( ICOUNT .NE. 1 ) GO TO 200
```

```
      LIN=LIN+2
      NONLIN=NONLIN+ 1
      IF( ICFIX(I2) .NE. 0 .OR. C(I2) .NE. 0.0 ) NONLIN=NONLIN+1
      IF(ICFIX(I1).EQ.ICFIX(I6).AND.ICFIX(I1).NE.1) GO TO 150
      IF(ITFIX(I1).EQ.ITFIX(I6).AND.ITFIX(I1).NE.1) GO TO 150
      NONLIN=NONLIN+ 2
  150 IF(F(I3).EQ.0.0.AND.IFFIX(I3).EQ.0) GO TO 170
      IF(F(I4).EQ.0.0.AND.IFFIX(I4).EQ.0) GO TO 170
      NONLIN=NONLIN+ 2
      IF (IHT(IUNIT).EQ.0) NONLIN = NONLIN -1
  170 IF(ITFIX(I2).EQ.ITFIX(I5).AND.ITFIX(I2).NE.1.AND.ITFIX(I2).NE.11)
     * GOTO 200
      IF(ITFIX(I2).EQ.ITFIX(I6).AND.ITFIX(I2).NE.1) GOTO 200
      NONLIN=NONLIN+ 1
  200 IF(F(I3).EQ.0.0.AND.IFFIX(I3).EQ.0) GO TO 250
      IF(F(I4).EQ.0.0.AND.IFFIX(I4).EQ.0) GO TO 250
      ICAB = 0
      CALL CONS(I4,I3,ICAB)
      CALL CONS(I6,I4,ICAB)
      CALL CONS(I5,I3,ICAB)
      GOTO 260
  250 ICAB = 3
  260 CALL CONS(I6,I5,ICAB)
      IF(ICAB .EQ.4 ) GO TO 300
      IALTER= 1
      GO TO 200
  300 CONTINUE
      IF(JFLAG.NE.3) RETURN
  400 NLIN= NLIN+1
      LINE(NLIN)= IUNIT
      FUN(NLIN)=(F(I1)-F(I2)-F(I5))/FMAX
      NLIN= NLIN+ 1
      LINE(NLIN)= IUNIT
C  ADDED WHEN C(I1) MADE LIQUID CONC. WHEN VAPOR FRACTION < 1  GRW   8/12/93

      CALL EQB (P(I1),CVAP,T(I1),HVAP,2,0,KSUB(I1))
      FUN(NLIN)=(F(I1)*(C(I1)*(1.D00-W(I1))+CVAP*W(I1))
     +          -F(I2)*C(I2)-F(I5)*C(I5))/FXC
C      FUN(NLIN)=(F(I1)*C(I1)-F(I2)*C(I2)-F(I5)*C(I5))/FXC
      NNL= NNL + 1
      LINE(NNL)=-IUNIT
      CALL EQB (P(I2),C(I5),T5E,H5E,1,0,KSUB(I5))
      FUN(NNL) =(T5E-T(I5)+DEVL(IUNIT))/TXN
      IF( ICFIX(I2) .EQ. 0 .AND. C(I2) .EQ. 0.0) GO TO 440
      NNL=NNL+1
      LINE(NNL)=-IUNIT
      CALL EQB (P(I2),C2E,T(I2),H2E,2,0,KSUB(I2))
      FUN(NNL)=(C2E-C(I2))/CTT
  440 IF(ICFIX(I1).EQ.ICFIX(I6).AND.ICFIX(I1).NE.1) GO TO 450
      IF(ITFIX(I1).EQ.ITFIX(I6).AND.ITFIX(I1).NE.1) GO TO 450
      NNL=NNL+1
      LINE(NNL)=-IUNIT
      CALL EQB (P(I2),C(I6),T6E,H6E,1,0,KSUB(I6))
      FUN(NNL) =(T6E-T(I6))/TXN
```

```
      NNL=NNL+1
      LINE(NNL)=-IUNIT
      FUN(NNL)=(  (H(I1)-H(I2))*(C(I6)-C(I1))-
     *           (H(I6)-H(I1))*(C(I1)-C(I2))  )/
     *           (CPT*CTT)
      F(I6)=F(I1)*(C(I1)-C(I2))/(C(I6)-C(I2))
      GOTO 490
  450 F(I6)=F(I1)
  490 IF(ITFIX(I2).EQ.ITFIX(I5).AND.ITFIX(I2).NE.1.AND.ITFIX(I2).NE.11)
     * GOTO 500
      IF(ITFIX(I2).EQ.ITFIX(I6).AND.ITFIX(I2).NE.1) GOTO 500
      NNL=NNL+1
      LINE(NNL)=-IUNIT
      IF(I6.GT.I5) GOTO 460
      FUN(NNL) = (T(I5)+DEVG(IUNIT)-T(I2))/TXN
      GOTO 500
  460 FUN(NNL) = (T(I6)+DEVG(IUNIT)-T(I2))/TXN
  500 QGP = F(I5)*H(I5)+F(I2)*H(I2)-F(I1)*H(I1)
      IF(F(I3).EQ.0.0.AND.IFFIX(I3).EQ.0) GO TO 550
      IF(F(I4).EQ.0.0.AND.IFFIX(I4).EQ.0) GO TO 550
      QGN = F(I4)*(H(I4)-H(I3))
      CALL QHEAT(IUNIT,T(I3),T(I4),T(I6),T(I5),FUN,QG,QGP,QGN,JFLAG)
  550 Q(IUNIT) = QGP
      RETURN
      END
C*********************************************************************
      SUBROUTINE HEX(IUNIT,I1,I2,I3,I4,FUN,JFLAG,IALTER)
C*********************************************************************
      IMPLICIT REAL*8(A-H,O-Z)
      DIMENSION FUN(99)
      COMMON /EQUAT/ LINE(99),NONLIN,NLIN,NE,NNL,ICOUNT,IAF(99),LIN
      COMMON /HEAT / KSUB(99),T(99),H(0:99),F(0:99),C(0:99),P(99),W(99),
     *               Q(30),IDUNIT(30),ISP(30,7),NSP,NUNITS,NUKT,NCONC,NFLOW,
     *               NPRESS,NW,ITER,MSGLVL
      COMMON / UAB / IHT(30),HT(30),UA(30),EFF(30),CAT(30),XLMTD(30),
     *               IPINCH(30),DEVL(30),DEVG(30)
      COMMON / VAR /ITFIX(99),IFFIX(0:99),ICFIX(99),IPFIX(99),IWFIX(99),
     *               IVART(99),IVARF(99),IVARC(99),IVARP(99),IVARW(99),
     *               IVT(99)  , IVF(99) , IVC(99) , IVP(99) , IVW(99) ,
     *               JT(16)   , JF(16)  , JC(16)  , JP(16)  , JW(16)
      COMMON / CN  / FMAX,TMAX,TMIN,CPP,TXN,FXC,CPT,CTT,FCPT,PMAX,IUFLAG
C*********************************************************************
C      IF(IHT(IUNIT).LT.5) GOTO 10
C      Q(IUNIT) = HT(IUNIT)
C      RETURN
   10 GO TO(100,200,200,400,400),JFLAG
  100 IF( ICOUNT .NE. 1 ) GO TO 200
      NONLIN=NONLIN+ 2
      IF (IHT(IUNIT).EQ.0) NONLIN = NONLIN -1
  200 ICAB = 0
      CALL CONS(I2,I3,ICAB)
      CALL CONS(I1,I4,ICAB)
      CALL CONS(I4,I3,ICAB)
      CALL CONS(I1,I2,ICAB)
```

```
      IF(ICAB .EQ.4 ) GO TO 300
      IALTER= 1
      GO TO 200
  300 CONTINUE
      IF(JFLAG.NE.3) RETURN
  400 QXP = F(I1)*(H(I2)-H(I1))
      QXN = F(I3)*(H(I4)-H(I3))
      CALL QHEAT(IUNIT,T(I3),T(I4),T(I1),T(I2),FUN,QX,QXP,QXN,JFLAG)
      Q(IUNIT) = QX
      RETURN
      END
C*********************************************************************
      SUBROUTINE COND(IUNIT,I1,I2,I3,I4,I5,FUN,JFLAG,IALTER)
C*********************************************************************
      IMPLICIT REAL*8(A-H,O-Z)
      DIMENSION FUN(99)
      COMMON /EQUAT/ LINE(99),NONLIN,NLIN,NE,NNL,ICOUNT,IAF(99),LIN
      COMMON /HEAT / KSUB(99),T(99),H(0:99),F(0:99),C(0:99),P(99),W(99),
     *               Q(30),IDUNIT(30),ISP(30,7),NSP,NUNITS,NUKT,NCONC,NFLOW,
     *               NPRESS,NW,ITER,MSGLVL
      COMMON / UAB / IHT(30),HT(30),UA(30),EFF(30),CAT(30),XLMTD(30),
     *                IPINCH(30),DEVL(30),DEVG(30)
      COMMON / VAR /ITFIX(99),IFFIX(0:99),ICFIX(99),IPFIX(99),IWFIX(99),
     *                IVART(99),IVARF(99),IVARC(99),IVARP(99),IVARW(99),
     *                IVT(99)  , IVF(99) , IVC(99) , IVP(99) , IVW(99) ,
     *                JT(16)   , JF(16)  , JC(16)  , JP(16)  , JW(16)
      COMMON / CN  / FMAX,TMAX,TMIN,CPP,TXN,FXC,CPT,CTT,FCPT,PMAX,IUFLAG
C*********************************************************************
C      IF(IHT(IUNIT).LT.5) GOTO 10
C      Q(IUNIT) = HT(IUNIT)
C      RETURN
   10 IF(I5.EQ.0) I5=I1
      GO TO(100,200,200,400,500),JFLAG
  100 IF( ICOUNT .NE. 1 ) GO TO 200
      NONLIN= NONLIN + 1
      IF(ITFIX(I2).EQ.ITFIX(I5).AND.ITFIX(I2).NE.1) GO TO 150
      IF(ITFIX(I1).EQ.ITFIX(I5).AND.ITFIX(I1).NE.1) GO TO 150
      NONLIN= NONLIN + 1
  150 IF(F(I3).EQ.0.0.AND.IFFIX(I3).EQ.0) GO TO 200
      IF(F(I4).EQ.0.0.AND.IFFIX(I4).EQ.0) GO TO 200
      NONLIN=NONLIN+ 2
      IF (IHT(IUNIT).EQ.0) NONLIN = NONLIN -1
  200 IF(F(I3).EQ.0.0.AND.IFFIX(I3).EQ.0) GO TO 250
      IF(F(I4).EQ.0.0.AND.IFFIX(I4).EQ.0) GO TO 250
      ICAB = 0
      CALL CONS(I3,I4,ICAB)
      CALL CONS(I3,I2,ICAB)
      CALL CONS(I4,I5,ICAB)
      GOTO 260
  250 ICAB = 3
  260 CALL CONS(I2,I5,ICAB)
      CALL CONS(I5,I1,ICAB)
      IF (ICAB .EQ. 5) GO TO 300
      IALTER= 1
```

```
      GO TO 200
  300 CONTINUE
      IF(JFLAG.NE.3) RETURN
  400 NNL = NNL + 1
      LINE(NNL)=-IUNIT
      CALL EQB (P(I1),C(I2),T2E,H2E,1,0,KSUB(I2))
      FUN(NNL)=(T2E-T(I2)+DEVL(IUNIT))/TXN
      IF(ITFIX(I2).EQ.ITFIX(I5).AND.ITFIX(I2).NE.1) GO TO 500
      IF(ITFIX(I1).EQ.ITFIX(I5).AND.ITFIX(I1).NE.1) GO TO 500
      NNL = NNL  + 1
      LINE(NNL)=-IUNIT
      CALL EQB (P(I1),C5E,T(I5),H5E,2,0,KSUB(I5))
      FUN(NNL)=(C5E-C(I5))/CTT
  500 QCN = F(I1)*(H(I2)-H(I1))
      IF(F(I3).EQ.0.0.AND.IFFIX(I3).EQ.0) GO TO 550
      IF(F(I4).EQ.0.0.AND.IFFIX(I4).EQ.0) GO TO 550
      QCP = F(I3)*(H(I4)-H(I3))
      CALL QHEAT(IUNIT,T(I5),T(I2),T(I3),T(I4),FUN,QC,QCP,QCN,JFLAG)
C      CALL QHEAT(IUNIT,T2E,T2E,T(I3),T(I4),FUN,QC,QCP,QCN,JFLAG)
  550 Q(IUNIT) = -QCN
      RETURN
      END
C*********************************************************************
      SUBROUTINE EVAP(IUNIT,I1,I2,I3,I4,I5,FUN,JFLAG,IALTER)
C*********************************************************************
      IMPLICIT REAL*8(A-H,O-Z)
      DIMENSION FUN(99)
      COMMON /EQUAT/ LINE(99),NONLIN,NLIN,NE,NNL,ICOUNT,IAF(99),LIN
      COMMON /HEAT / KSUB(99),T(99),H(0:99),F(0:99),C(0:99),P(99),W(99),
     *               Q(30),IDUNIT(30),ISP(30,7),NSP,NUNITS,NUKT,NCONC,NFLOW,
     *               NPRESS,NW,ITER,MSGLVL
      COMMON / UAB / IHT(30),HT(30),UA(30),EFF(30),CAT(30),XLMTD(30),
     *               IPINCH(30),DEVL(30),DEVG(30)
      COMMON / VAR /ITFIX(99),IFFIX(0:99),ICFIX(99),IPFIX(99),IWFIX(99),
     *               IVART(99),IVARF(99),IVARC(99),IVARP(99),IVARW(99),
     *               IVT(99)  , IVF(99) , IVC(99) , IVP(99) , IVW(99) ,
     *               JT(16)   , JF(16)  , JC(16)  , JP(16)  , JW(16)
      COMMON / CN  / FMAX,TMAX,TMIN,CPP,TXN,FXC,CPT,CTT,FCPT,PMAX,IUFLAG
C*********************************************************************
C      IF(IHT(IUNIT).LT.5) GOTO 10
C      Q(IUNIT) = HT(IUNIT)
C      RETURN
   10 IF(I5.EQ.0) I5=I1
      GO TO(100,200,200,400,500),JFLAG
  100 IF( ICOUNT .NE. 1 ) GO TO 200
      IF(ITFIX(I1).EQ.ITFIX(I5).AND.ITFIX(I1).NE.1) GOTO 50
      NONLIN= NONLIN + 1
   50 IF(ITFIX(I2).EQ.ITFIX(I5).AND.ITFIX(I2).NE.1) GO TO 150
      NONLIN= NONLIN + 1
  150 IF(F(I3).EQ.0.0.AND.IFFIX(I3).EQ.0) GO TO 200
      IF(F(I4).EQ.0.0.AND.IFFIX(I4).EQ.0) GO TO 200
      NONLIN=NONLIN+ 2
      IF (IHT(IUNIT).EQ.0) NONLIN = NONLIN -1
  200 IF(F(I3).EQ.0.0.AND.IFFIX(I3).EQ.0) GO TO 250
```

```
      IF(F(I4).EQ.0.0.AND.IFFIX(I4).EQ.0) GO TO 250
      ICAB = 0
      CALL CONS(I4,I3,ICAB)
      CALL CONS(I2,I3,ICAB)
      CALL CONS(I5,I4,ICAB)
      GOTO 260
  250 ICAB = 3
  260 CALL CONS(I5,I2,ICAB)
      CALL CONS(I1,I5,ICAB)
      IF(ICAB .EQ. 5) GO TO 300
      IALTER= 1
      GO TO 200
  300 CONTINUE
      IF(JFLAG.NE.3) RETURN
  400 IF(ITFIX(I1).EQ.ITFIX(I5).AND.ITFIX(I1).NE.1) GO TO 450
      NNL = NNL  + 1
      LINE(NNL)=-IUNIT
      CALL EQB (P(I2),C(I5),T5E,H5E,1,0,KSUB(I5))
      FUN(NNL)=(T5E-T(I5)+DEVL(IUNIT))/TXN
  450 IF(ITFIX(I2).EQ.ITFIX(I5).AND.ITFIX(I2).NE.1) GO TO 500
      NNL = NNL  + 1
      LINE(NNL)=-IUNIT
      CALL EQB (P(I2),C2E,T(I2),H2E,2,0,KSUB(I2))
      FUN(NNL)=(C2E-C(I2))/CTT
  500 QEP = F(I1)*(H(I2)-H(I1))
      IF(F(I3).EQ.0.0.AND.IFFIX(I3).EQ.0) GO TO 550
      IF(F(I4).EQ.0.0.AND.IFFIX(I4).EQ.0) GO TO 550
      QEN = F(I3)*(H(I4)-H(I3))
      CALL QHEAT(IUNIT,T(I3),T(I4),T(I5),T(I2),FUN,QE,QEP,QEN,JFLAG)
  550 Q(IUNIT) = QEP
      RETURN
      END
C*********************************************************************
      SUBROUTINE VALVE(IUNIT,I1,I2,FUN,JFLAG)
C*********************************************************************
      IMPLICIT REAL*8(A-H,O-Z)
      DIMENSION FUN(99)
      COMMON /EQUAT/ LINE(99),NONLIN,NLIN,NE,NNL,ICOUNT,IAF(99),LIN
      COMMON /HEAT / KSUB(99),T(99),H(0:99),F(0:99),C(0:99),P(99),W(99),
     *               Q(30),IDUNIT(30),ISP(30,7),NSP,NUNITS,NUKT,NCONC,NFLOW,
     *               NPRESS,NW,ITER,MSGLVL
      COMMON / UAB / IHT(30),HT(30),UA(30),EFF(30),CAT(30),XLMTD(30),
     *                IPINCH(30),DEVL(30),DEVG(30)
      COMMON / VAR /ITFIX(99),IFFIX(0:99),ICFIX(99),IPFIX(99),IWFIX(99),
     *                IVART(99),IVARF(99),IVARC(99),IVARP(99),IVARW(99),
     *                IVT(99)  , IVF(99) , IVC(99) , IVP(99) , IVW(99) ,
     *                JT(16)   , JF(16)  , JC(16)  , JP(16)  , JW(16)
      COMMON / CN  / FMAX,TMAX,TMIN,CPP,TXN,FXC,CPT,CTT,FCPT,PMAX,IUFLAG
C*********************************************************************
      Q(IUNIT) = 0.0
      IF(IHT(IUNIT).EQ.5) RETURN
      GO TO(100,300,200,200,300),JFLAG
  100 IF (ICOUNT.NE. 1) RETURN
      NONLIN= NONLIN + 3
```

```
      IF(IHT(IUNIT).EQ.0) GOTO 300
      NONLIN= NONLIN + 1
      GOTO 300
  200 NNL= NNL + 1
      LINE(NNL)=-IUNIT
C   REVISED FOR 2-COMPONENT FLASHING     GRW  8/10/93
      CALL EQB (P(I2),C(I2),T2E,H2E,1,0,KSUB(I2))
      CALL EQB (P(I2),CVAP,T2E,H2E,2,0,KSUB(I2))
      IF((T2E-T(I2)).LT.0.0.OR.W(I2).GT.0.001) THEN
          FUN(NNL)=(T2E-T(I2))/TXN
      ELSE
          FUN(NNL)=0.0
      END IF
      NNL= NNL + 1
      LINE(NNL)=-IUNIT
      FUN(NNL)=C(I1)-C(I2)*(1.D00-W(I2))-CVAP*W(I2)
      NNL= NNL + 1
      LINE(NNL)=-IUNIT
      FUN(NNL) = (H(I2)-H(I1))/CPT
      CVLV=HT(IUNIT)
      PVLV=DEVL(IUNIT)
      DPVLV=(P(I1)-P(I2))**PVLV
      IF(IHT(IUNIT).EQ.0) GOTO 290
      NNL= NNL + 1
      LINE(NNL)=-IUNIT
      FUN(NNL) = (F(I1)-CVLV*DPVLV)/FMAX
  290 EFF(IUNIT)= F(I1)/DPVLV
  300 RETURN
      END
C*********************************************************************
      SUBROUTINE MIX(IUNIT,I1,I2,I3,I4,FUN, JFLAG)
C*********************************************************************
      IMPLICIT REAL*8(A-H,O-Z)
      DIMENSION FUN(99)
      COMMON /EQUAT/ LINE(99),NONLIN,NLIN,NE,NNL,ICOUNT,IAF(99),LIN
      COMMON /HEAT / KSUB(99),T(99),H(0:99),F(0:99),C(0:99),P(99),W(99),
     *               Q(30),IDUNIT(30),ISP(30,7),NSP,NUNITS,NUKT,NCONC,NFLOW,
     *               NPRESS,NW,ITER,MSGLVL
      COMMON / UAB / IHT(30),HT(30),UA(30),EFF(30),CAT(30),XLMTD(30),
     *               IPINCH(30),DEVL(30),DEVG(30)
      COMMON / VAR /ITFIX(99),IFFIX(0:99),ICFIX(99),IPFIX(99),IWFIX(99),
     *               IVART(99),IVARF(99),IVARC(99),IVARP(99),IVARW(99),
     *               IVT(99)  , IVF(99) , IVC(99) , IVP(99) , IVW(99) ,
     *               JT(16)   , JF(16)  , JC(16)  , JP(16)  , JW(16)
      COMMON / CN  / FMAX,TMAX,TMIN,CPP,TXN,FXC,CPT,CTT,FCPT,PMAX,IUFLAG
C*********************************************************************
      Q(IUNIT) = 0.0
      IF(IHT(IUNIT).EQ.5) RETURN
      IF(I4.NE.0) GOTO 5
      F(I4)=0.0
      C(I4)=0.0
      H(I4)=0.0
      IFFIX(I4)=0
    5 IF(F(I2).EQ.0.0.AND.F(I4).EQ.0.0.AND.IFFIX(I1).EQ.IFFIX(I3).
```

```
     *  AND.ICFIX(I1).EQ.ICFIX(I3).AND.ITFIX(I1).EQ.ITFIX(I3) ) RETURN
      GO TO(10,50,20,20,50),JFLAG
   10 IF (ICOUNT.NE. 1) RETURN
      IF(IFFIX(I1).EQ.0.AND.IFFIX(I2).EQ.0.AND.IFFIX(I3).EQ.0.AND.
     *IFFIX(I4).EQ.0)  GO TO 3
      LIN=LIN+1
    3 IF(ICFIX(I3) .EQ. 0 .AND. C(I3) .EQ. 0.0) GOTO 4
      LIN=LIN+1
    4 NONLIN= NONLIN + 1
      RETURN
   20 IF(IFFIX(I1).EQ.0.AND.IFFIX(I2).EQ.0.AND.IFFIX(I3).EQ.0.AND.
     *IFFIX(I4).EQ.0)  GO TO 30
      NLIN= NLIN  + 1
      LINE(NLIN)= IUNIT
      FUN(NLIN)= (F(I1) + F(I2) + F(I4) - F(I3))/FMAX
   30 IF(ICFIX(I3) .EQ. 0 .AND. C(I3) .EQ. 0.0) GO TO 40
      NLIN = NLIN  + 1
      LINE(NLIN)= IUNIT
      FUN(NLIN)=(F(I1)*C(I1)+F(I2)*C(I2)+F(I4)*C(I4)-F(I3)*C(I3))/FXC
   40 NNL = NNL  + 1
      LINE(NNL)=-IUNIT
      FUN(NNL)=(F(I1)*H(I1)+F(I2)*H(I2)+F(I4)*H(I4)-F(I3)*H(I3))/FCPT
   50 RETURN
      END
C*********************************************************************
      SUBROUTINE SPLIT (IUNIT,I1,I2,I3,I4,FUN,JFLAG)
C*********************************************************************
      IMPLICIT REAL*8(A-H,O-Z)
      DIMENSION FUN(99)
      COMMON /EQUAT/ LINE(99),NONLIN,NLIN,NE,NNL,ICOUNT,IAF(99),LIN
      COMMON /HEAT / KSUB(99),T(99),H(0:99),F(0:99),C(0:99),P(99),W(99),
     *              Q(30),IDUNIT(30),ISP(30,7),NSP,NUNITS,NUKT,NCONC,NFLOW,
     *              NPRESS,NW,ITER,MSGLVL
      COMMON / UAB / IHT(30),HT(30),UA(30),EFF(30),CAT(30),XLMTD(30),
     *               IPINCH(30),DEVL(30),DEVG(30)
      COMMON / VAR /ITFIX(99),IFFIX(0:99),ICFIX(99),IPFIX(99),IWFIX(99),
     *               IVART(99),IVARF(99),IVARC(99),IVARP(99),IVARW(99),
     *               IVT(99)  , IVF(99) , IVC(99) , IVP(99) , IVW(99) ,
     *               JT(16)   , JF(16)  , JC(16)  , JP(16)  , JW(16)
      COMMON / CN  / FMAX,TMAX,TMIN,CPP,TXN,FXC,CPT,CTT,FCPT,PMAX,IUFLAG
C*********************************************************************
      Q(IUNIT) = 0.0
      IF(IHT(IUNIT).EQ.5) RETURN
      IF(I4.NE.0) GOTO 5
      F(I4)=0.0
      IFFIX(I4)=0
    5 IF(F(I2).EQ.0.0.AND.IFFIX(I1).EQ.IFFIX(I3)) RETURN
      GO TO (6,20,10,10,20),JFLAG
    6 IF (ICOUNT.NE.1) RETURN
      IF(IFFIX(I1).EQ.0.AND.IFFIX(I2).EQ.0.AND.IFFIX(I3).EQ.0.AND.
     * IFFIX(I4).EQ.0) RETURN
      LIN=LIN+1
      IF(IHT(IUNIT).EQ.0) GOTO 20
      NONLIN= NONLIN + 1
```

```
      GOTO 20
   10 IF(IFFIX(I1).EQ.0.AND.IFFIX(I2).EQ.0.AND.IFFIX(I3).EQ.0.AND.
     * IFFIX(I4).EQ.0) RETURN
      NLIN= NLIN+ 1
      LINE(NLIN)= IUNIT
      FUN(NLIN) = (F(I1)+F(I2)+F(I4)-F(I3))/FMAX
      IF(IHT(IUNIT).EQ.0) GOTO 20
      NNL = NNL  + 1
      LINE(NNL)=-IUNIT
      IF(IHT(IUNIT).EQ.1) FUN(NNL)=(F(I1)-F(I3)*HT(IUNIT))/FMAX
      IF(IHT(IUNIT).EQ.2) FUN(NNL)=(F(I2)-F(I3)*HT(IUNIT))/FMAX
   20 RETURN
      END
C*********************************************************************
      SUBROUTINE RECT(IUNIT,I1,I2,I3,I4,I5,I6,FUN,JFLAG,IALTER)
C*********************************************************************
      IMPLICIT REAL*8(A-H,O-Z)
      DIMENSION FUN(99)
      COMMON /EQUAT/ LINE(99),NONLIN,NLIN,NE,NNL,ICOUNT,IAF(99),LIN
      COMMON /HEAT / KSUB(99),T(99),H(0:99),F(0:99),C(0:99),P(99),W(99),
     *               Q(30),IDUNIT(30),ISP(30,7),NSP,NUNITS,NUKT,NCONC,NFLOW,
     *               NPRESS,NW,ITER,MSGLVL
      COMMON / UAB / IHT(30),HT(30),UA(30),EFF(30),CAT(30),XLMTD(30),
     *                IPINCH(30),DEVL(30),DEVG(30)
      COMMON / VAR /ITFIX(99),IFFIX(0:99),ICFIX(99),IPFIX(99),IWFIX(99),
     *                IVART(99),IVARF(99),IVARC(99),IVARP(99),IVARW(99),
     *                IVT(99)  , IVF(99) , IVC(99) , IVP(99) , IVW(99) ,
     *                JT(16)   , JF(16)  , JC(16)  , JP(16)  , JW(16)
      COMMON / CN  / FMAX,TMAX,TMIN,CPP,TXN,FXC,CPT,CTT,FCPT,PMAX,IUFLAG
C*********************************************************************
C      IF(IHT(IUNIT).LT.5) GOTO 10
C      Q(IUNIT) = HT(IUNIT)
C      RETURN
   10 IF(I6.EQ.0) I6=I1
      GO TO(100,200,200,400,500),JFLAG
  100 IF( ICOUNT .NE. 1 ) GO TO 200
      LIN=LIN+2
      NONLIN= NONLIN + 2
      IF(ITFIX(I1).EQ.ITFIX(I6).AND.ITFIX(I1).NE.1) GO TO 150
      NONLIN= NONLIN + 1
  150 IF(F(I3).EQ.0.0.AND.IFFIX(I3).EQ.0) GO TO 170
      IF(F(I4).EQ.0.0.AND.IFFIX(I4).EQ.0) GO TO 170
      NONLIN=NONLIN+ 2
      IF (IHT(IUNIT).EQ.0) NONLIN = NONLIN -1
  170 IF(ITFIX(I6).EQ.ITFIX(I5).AND.ITFIX(I6).NE.1) GO TO 200
      IF(ITFIX(I2).EQ.ITFIX(I5).AND.ITFIX(I2).NE.1) GO TO 200
      NONLIN= NONLIN + 1
  200 IF(F(I3).EQ.0.0.AND.IFFIX(I3).EQ.0) GO TO 250
      IF(F(I4).EQ.0.0.AND.IFFIX(I4).EQ.0) GO TO 250
      ICAB = 0
      CALL CONS(I3,I4,ICAB)
C      CALL CONS(I4,I5,ICAB)            REMOVED 4/23/93  GRW
      CALL CONS(I3,I2,ICAB)
      CALL CONS(I4,I6,ICAB)
```

```
      GOTO 260
C  250 ICAB = 4
  250 ICAB = 3
  260 CALL CONS(I5,I6,ICAB)
      CALL CONS(I2,I6,ICAB)
      CALL CONS(I6,I1,ICAB)
C      IF(ICAB .EQ.7 ) GO TO 300
      IF(ICAB .EQ.6 ) GO TO 300
      IALTER= 1
      GO TO 200
  300 CONTINUE
      IF(JFLAG.NE.3) RETURN
  400 NLIN= NLIN+1
      LINE(NLIN)= IUNIT
      FUN(NLIN)= (F(I1)-F(I2)-F(I5))/FMAX
      NLIN= NLIN+ 1
      LINE(NLIN)= IUNIT
      FUN(NLIN)=(F(I1)*C(I1)-F(I2)*C(I2)-F(I5)*C(I5))/FXC
      NNL=NNL+1
      LINE(NNL)=-IUNIT
      CALL EQB  (P(I2),C2E,T(I2),H2E,2,0,KSUB(I2))
      FUN(NNL)=(C2E-C(I2))/CTT
      NNL = NNL + 1
      LINE(NNL)=-IUNIT
      CALL EQB (P(I2),C(I5),T5E,H5E,1,0,KSUB(I5))
      FUN(NNL)=(T5E-T(I5)+DEVL(IUNIT))/TXN
      IF(ITFIX(I1).EQ.ITFIX(I6).AND.ITFIX(I1).NE.1) GO TO 450
      NNL = NNL  + 1
      LINE(NNL)=-IUNIT
      CALL EQB (P(I1),C6E,T(I6),H6E,2,0,KSUB(I6))
      FUN(NNL)=(C6E-C(I6))/CTT
  450 IF(ITFIX(I6).EQ.ITFIX(I5).AND.ITFIX(I6).NE.1) GO TO 500
      IF(ITFIX(I2).EQ.ITFIX(I5).AND.ITFIX(I2).NE.1) GO TO 500
      NNL = NNL  + 1
      LINE(NNL)=-IUNIT
      FUN(NNL)= (T(I5)+DEVG(IUNIT)-T(I6))/TXN
  500 QRN = F(I5)*H(I5)+F(I2)*H(I2)-F(I1)*H(I1)
      IF(F(I3).EQ.0.0.AND.IFFIX(I3).EQ.0) GO TO 550
      IF(F(I4).EQ.0.0.AND.IFFIX(I4).EQ.0) GO TO 550
      QRP = F(I3)*(H(I4)-H(I3))
      CALL QHEAT(IUNIT,T(I6),T(I2),T(I3),T(I4),FUN,QR,QRP,QRN,JFLAG)
  550 Q(IUNIT) = -QRN
      RETURN
      END
C*********************************************************************
      SUBROUTINE ANALYS(IUNIT,I1,I2,I3,I4,I5,I6,I7,FUN,JFLAG,IALTER)
C*********************************************************************
      IMPLICIT REAL*8(A-H,O-Z)
      DIMENSION FUN(99)
      COMMON /EQUAT/ LINE(99),NONLIN,NLIN,NE,NNL,ICOUNT,IAF(99),LIN
      COMMON /HEAT / KSUB(99),T(99),H(0:99),F(0:99),C(0:99),P(99),W(99),
     *               Q(30),IDUNIT(30),ISP(30,7),NSP,NUNITS,NUKT,NCONC,NFLOW,
     *               NPRESS,NW,ITER,MSGLVL
      COMMON / UAB / IHT(30),HT(30),UA(30),EFF(30),CAT(30),XLMTD(30),
```

```
     *                IPINCH(30),DEVL(30),DEVG(30)
      COMMON / VAR /ITFIX(99),IFFIX(0:99),ICFIX(99),IPFIX(99),IWFIX(99),
     *                IVART(99),IVARF(99),IVARC(99),IVARP(99),IVARW(99),
     *                IVT(99)  , IVF(99) , IVC(99) , IVP(99) , IVW(99) ,
     *                JT(16)   , JF(16)  , JC(16)  , JP(16)  , JW(16)
      COMMON / CN  / FMAX,TMAX,TMIN,CPP,TXN,FXC,CPT,CTT,FCPT,PMAX,IUFLAG
C*********************************************************************
C      IF(IHT(IUNIT).LT.5) GOTO 10
C      Q(IUNIT) = HT(IUNIT)
C      RETURN
   10 IF(I7.EQ.0) I7=I1
      GO TO(100,200,200,400,500),JFLAG
  100 IF( ICOUNT .NE. 1 ) GO TO 200
      LIN=LIN+2
      NONLIN=NONLIN+ 2
      IF (IHT(IUNIT).EQ.0) NONLIN = NONLIN -1
      IF(ITFIX(I2).EQ.ITFIX(I5).AND.ITFIX(I5).EQ.ITFIX(I7).AND
     *  .ITFIX(I2).NE.1) NONLIN = NONLIN -1
      IF(ICFIX(I1).EQ.ICFIX(I7).AND.ICFIX(I1).NE.1) GO TO 140
      IF(ITFIX(I1).EQ.ITFIX(I7).AND.ITFIX(I1).NE.1) GO TO 140
      NONLIN=NONLIN+ 2
  140 IF(I3.NE.0.AND.I4.NE.0) GOTO 160
      NONLIN=NONLIN+ 1
      GOTO 170
  160 IF(F(I3).EQ.0.0.AND.IFFIX(I3).EQ.0) GO TO 170
      IF(F(I4).EQ.0.0.AND.IFFIX(I4).EQ.0) GO TO 170
      NONLIN=NONLIN+ 2
  170 IF(ITFIX(I2).EQ.ITFIX(I5).AND.ITFIX(I2).NE.1) GOTO 200
      IF(ITFIX(I2).EQ.ITFIX(I7).AND.ITFIX(I2).NE.1) GOTO 200
      NONLIN=NONLIN+ 1
  200 IF(I3.EQ.0.AND.I4.EQ.0) GOTO 300
      IF(I4.GT.I3) GOTO 210
      IF(I4.LT.I3) GOTO 220
  210 IF(F(I3).EQ.0.0.AND.IFFIX(I3).EQ.0) GO TO 215
      IF(F(I4).EQ.0.0.AND.IFFIX(I4).EQ.0) GO TO 215
      ICAB = 0
      CALL CONS(I3,I4,ICAB)
      CALL CONS(I4,I7,ICAB)
      CALL CONS(I3,I5,ICAB)
      GOTO 216
  215 ICAB = 3
  216 CALL CONS(I5,I7,ICAB)
      IF(ICAB .EQ.4 ) GO TO 300
      IALTER= 1
      GO TO 210
  220 IF(F(I3).EQ.0.0.AND.IFFIX(I3).EQ.0) GO TO 225
      IF(F(I4).EQ.0.0.AND.IFFIX(I4).EQ.0) GO TO 225
      ICAB = 0
      CALL CONS(I4,I3,ICAB)
      CALL CONS(I7,I4,ICAB)
      CALL CONS(I5,I3,ICAB)
      GOTO 226
  225 ICAB = 3
  226 CALL CONS(I7,I5,ICAB)
```

```
      IF(ICAB .EQ.4 ) GO TO 300
      IALTER= 1
      GO TO 220
  300 CONTINUE
      IF(JFLAG.NE.3) RETURN
  400 NLIN= NLIN+1
      LINE(NLIN)= IUNIT
      FUN(NLIN)=(F(I1)+F(I6)-F(I2)-F(I5))/FMAX
      NLIN= NLIN+ 1
      LINE(NLIN)= IUNIT
C  ADDED WHEN C(I1) MADE LIQUID CONC. WHEN VAPOR FRACTION < 1  GRW   8/12/93

      CALL EQB (P(I1),CVAP,T(I1),HVAP,2,0,KSUB(I1))
      FUN(NLIN)=(F(I1)*(C(I1)*(1.D00-W(I1))+CVAP*W(I1))
     +          +F(I6)*C(I6)-F(I2)*C(I2)-F(I5)*C(I5))/FXC
C      FUN(NLIN)=(F(I1)*C(I1)+F(I6)*C(I6)-F(I2)*C(I2)-F(I5)*C(I5))/FXC
      IF(ITFIX(I2).EQ.ITFIX(I5).AND.ITFIX(I5).EQ.ITFIX(I7).AND
     *  .ITFIX(I2).NE.1) GO TO 420
      NNL= NNL + 1
      LINE(NNL)=-IUNIT
      CALL EQB (P(I2),C(I5),T5E,H5E,1,0,KSUB(I5))
      FUN(NNL) =(T5E-T(I5)+DEVL(IUNIT))/TXN
  420 NNL=NNL+1
      LINE(NNL)=-IUNIT
      CALL EQB (P(I2),C2E,T(I2),H2E,2,0,KSUB(I2))
      FUN(NNL)=(C2E-C(I2))/CTT
      IF(ICFIX(I1).EQ.ICFIX(I7).AND.ICFIX(I1).NE.1) GO TO 450
      IF(ITFIX(I1).EQ.ITFIX(I7).AND.ITFIX(I1).NE.1) GO TO 450
      NNL=NNL+1
      LINE(NNL)=-IUNIT
      CALL EQB (P(I2),C(I7),T7E,H7E,1,0,KSUB(I7))
      FUN(NNL) =(T7E-T(I7))/TXN
      NNL=NNL+1
      LINE(NNL)=-IUNIT
      FUN(NNL)=(  (H(I1)-H(I2))*(C(I7)-C(I1))-
     *           (H(I7)-H(I1))*(C(I1)-C(I2))  )/
     *           (CPT*CTT)
      IF((C(I7)-C(I2)).EQ.0.0) GO TO 460
      F(I7)=F(I1)*(C(I1)-C(I2))/(C(I7)-C(I2))
      GOTO 460
  450 F(I7)=F(I1)
  460 IF(ITFIX(I2).EQ.ITFIX(I5).AND.ITFIX(I2).NE.1) GOTO 470
      IF(ITFIX(I2).EQ.ITFIX(I7).AND.ITFIX(I2).NE.1) GOTO 470
      NNL=NNL+1
      LINE(NNL)=-IUNIT
      FUN(NNL) = (T(I7)+DEVG(IUNIT)-T(I2))/TXN
  470 IF(I3.NE.0.AND.I4.NE.0) GOTO 520
      NNL=NNL+1
      LINE(NNL)=-IUNIT
      FUN(NNL) = (F(I5)*H(I5)+F(I2)*H(I2)-F(I1)*H(I1)-F(I6)*H(I6))/FCPT
  500 IF(I3.NE.0.AND.I4.NE.0) GOTO 520
      Q(IUNIT) = 0.0
      RETURN
  520 QNP = F(I5)*H(I5)+F(I2)*H(I2)-F(I1)*H(I1)-F(I6)*H(I6)
```

```
      IF(QNP.LT.0.0) QNP=-QNP
      IF(F(I3).EQ.0.0.AND.IFFIX(I3).EQ.0) GO TO 550
      IF(F(I4).EQ.0.0.AND.IFFIX(I4).EQ.0) GO TO 550
      QNN = F(I4)*(H(I4)-H(I3))
      IF(QNN.GT.0.0) QNN=-QNN
      IF(I4.GT.I3)
     *    CALL QHEAT(IUNIT,T(I7),T(I5),T(I3),T(I4),FUN,QN,QNP,QNN,JFLAG)
      IF(I4.LT.I3)
     *    CALL QHEAT(IUNIT,T(I3),T(I4),T(I7),T(I5),FUN,QN,QNP,QNN,JFLAG)
  550 Q(IUNIT) = QNP
      RETURN
      END
C*********************************************************************
      SUBROUTINE COMP(IUNIT,I1,I2,I3,FUN,JFLAG)
C*********************************************************************
      IMPLICIT REAL*8(A-H,O-Z)
      DIMENSION FUN(99)
      COMMON /EQUAT/ LINE(99),NONLIN,NLIN,NE,NNL,ICOUNT,IAF(99),LIN
      COMMON /HEAT / KSUB(99),T(99),H(0:99),F(0:99),C(0:99),P(99),W(99),
     *              Q(30),IDUNIT(30),ISP(30,7),NSP,NUNITS,NUKT,NCONC,NFLOW,
     *              NPRESS,NW,ITER,MSGLVL
      COMMON / UAB / IHT(30),HT(30),UA(30),EFF(30),CAT(30),XLMTD(30),
     *               IPINCH(30),DEVL(30),DEVG(30)
      COMMON / VAR /ITFIX(99),IFFIX(0:99),ICFIX(99),IPFIX(99),IWFIX(99),
     *               IVART(99),IVARF(99),IVARC(99),IVARP(99),IVARW(99),
     *               IVT(99)  , IVF(99) , IVC(99) , IVP(99) , IVW(99) ,
     *               JT(16)   , JF(16)  , JC(16)  , JP(16)  , JW(16)
      COMMON / CN  / FMAX,TMAX,TMIN,CPP,TXN,FXC,CPT,CTT,FCPT,PMAX,IUFLAG
C*********************************************************************
      IF(IHT(IUNIT).LT.5) GOTO 10
      Q(IUNIT) = HT(IUNIT)
      RETURN
   10 GO TO(100,200,400,400,500),JFLAG
  100 IF (ICOUNT.NE. 1) GO TO 200
      NONLIN= NONLIN + 1
      IF(HT(IUNIT).EQ.1.00.OR.I2.EQ.I3.OR.I3.EQ.0) GOTO 200
      NONLIN= NONLIN + 1
  200 RETURN
  400 NNL= NNL + 1
      LINE(NNL)=-IUNIT
      CALL EQB (P(I1),T(I1),TS,S1,2,3,KSUB(I1))
      CALL EQB (P(I3),T(I3),TS,S3,2,3,KSUB(I3))
      FUN(NNL) =  S3-S1
      IF(HT(IUNIT).EQ.1.00.OR.I2.EQ.I3.OR.I3.EQ.0) GOTO 500
      NNL= NNL + 1
      LINE(NNL)=-IUNIT
      FUN(NNL) = (H(I3)-H(I1)-HT(IUNIT)*(H(I2)-H(I1)))/CPT
  500 Q(IUNIT) = F(I1)*(H(I2)-H(I1))
      UA(IUNIT)= 0.0
      EFF(IUNIT)=HT(IUNIT)
      CAT(IUNIT)= 0.0
      RETURN
      END
C*********************************************************************
```

```
      SUBROUTINE PUMP(IUNIT,I1,I2,I3,FUN,JFLAG)
C*********************************************************************
      IMPLICIT REAL*8(A-H,O-Z)
      DIMENSION FUN(99)
      COMMON /EQUAT/ LINE(99),NONLIN,NLIN,NE,NNL,ICOUNT,IAF(99),LIN
      COMMON /HEAT / KSUB(99),T(99),H(0:99),F(0:99),C(0:99),P(99),W(99),
     *               Q(30),IDUNIT(30),ISP(30,7),NSP,NUNITS,NUKT,NCONC,NFLOW,
     *               NPRESS,NW,ITER,MSGLVL
      COMMON / UAB / IHT(30),HT(30),UA(30),EFF(30),CAT(30),XLMTD(30),
     *               IPINCH(30),DEVL(30),DEVG(30)
      COMMON / VAR /ITFIX(99),IFFIX(0:99),ICFIX(99),IPFIX(99),IWFIX(99),
     *               IVART(99),IVARF(99),IVARC(99),IVARP(99),IVARW(99),
     *               IVT(99)  , IVF(99) , IVC(99) , IVP(99) , IVW(99) ,
     *               JT(16)   , JF(16)  , JC(16)  , JP(16)  , JW(16)
      COMMON / CN  / FMAX,TMAX,TMIN,CPP,TXN,FXC,CPT,CTT,FCPT,PMAX,IUFLAG
C*********************************************************************
      IF(IHT(IUNIT).LT.5) GOTO 10
      Q(IUNIT) = HT(IUNIT)
      RETURN
   10 GO TO(100,200,400,400,500),JFLAG
  100 IF (ICOUNT.NE. 1) GO TO 200
      NONLIN= NONLIN + 1
      IF(HT(IUNIT).EQ.1.00.OR.I2.EQ.I3.OR.I3.EQ.0) GOTO 200
      NONLIN= NONLIN + 1
  200 RETURN
  400 NNL= NNL + 1
      LINE(NNL)=-IUNIT
      CALL EQB (P(I1),C(I1),TS,D1,1,2,KSUB(I1))
      FUN(NNL) = (H(I3)-H(I1)-2.9642E-03*(P(I3)-P(I1))/D1)/CPT
      IF(HT(IUNIT).EQ.1.00.OR.I2.EQ.I3.OR.I3.EQ.0) GOTO 500
      NNL= NNL + 1
      LINE(NNL)=-IUNIT
      FUN(NNL) = (H(I3)-H(I1)-HT(IUNIT)*(H(I2)-H(I1)))/CPT
  500 Q(IUNIT) = F(I1)*(H(I2)-H(I1))
      UA(IUNIT)= 0.0
      EFF(IUNIT)=HT(IUNIT)
      CAT(IUNIT)= 0.0
      RETURN
      END
C*********************************************************************
      SUBROUTINE QHEAT(IUNIT,T1,T2,T3,T4,FUN,QU,QQP,QQN,JFLAG)
C*********************************************************************
      IMPLICIT REAL*8(A-H,O-Z)
      DIMENSION FUN(99)
      COMMON /EQUAT/ LINE(99),NONLIN,NLIN,NE,NNL,ICOUNT,IAF(99),LIN
      COMMON / UAB / IHT(30),HT(30),UA(30),EFF(30),CAT(30),XLMTD(30),
     *               IPINCH(30),DEVL(30),DEVG(30)
      COMMON / CN  / FMAX,TMAX,TMIN,CPP,TXN,FXC,CPT,CTT,FCPT,PMAX,IUFLAG
C*********************************************************************
 1000 FORMAT (/,'      ERROR ...  INCORRECT IPINCH FOUND   ',
     *          /,'      COMPARE  IPINCH IN INPUT AND OUTPUT ')
C*********************************************************************
      TR1= T1-T4
      TR2= T2-T3
```

```
      TR = TR1/TR2
      QU=QQP
      IPIN=1
      IF(TR1.GT.TR2) IPIN=-1
      IF(JFLAG.EQ.5) GO TO 600
      IF(IPINCH(IUNIT).NE.0) IPIN=IPINCH(IUNIT)
      NNL= NNL+ 1
      LINE(NNL)=-IUNIT
      FUN(NNL) = (QQP+QQN)/FCPT
      IF (IHT(IUNIT).EQ.0) RETURN
      NNL= NNL+ 1
      LINE(NNL)=-IUNIT
      GO TO (100,200,300,400,500),IHT(IUNIT)
  100 XLM=(TR1+TR2)*0.5
      IF (DABS(TR-1.0) .GT. 1.0D-05 ) XLM=(TR1-TR2)/DLOG(TR)
      QU=HT(IUNIT)*XLM
      FUN(NNL) = (QU+0.5*(QQN-QQP))/FCPT
      RETURN
  200 IF(IPIN.LT.0) GO TO 21
      TR3 = T3*(1.- HT(IUNIT))+T1*HT(IUNIT)-T4
      GO TO 22
   21 TR3 = T1*(1.- HT(IUNIT))+T3*HT(IUNIT)-T2
   22 FUN(NNL) = TR3/TXN
      RETURN
  300 IF(IPIN.LT.0) GO TO 31
      TR3 = TR1 - HT(IUNIT)
      GO TO 32
   31 TR3 = TR2 - HT(IUNIT)
   32 FUN(NNL) = TR3/TXN
      RETURN
  400 XLM=(TR1+TR2)*0.5
      IF (DABS(TR-1.0) .GT. 1.0D-05 ) XLM=(TR1-TR2)/DLOG(TR)
      FUN(NNL) = (HT(IUNIT)-XLM)/TXN
      RETURN
  500 FUN(NNL) = (HT(IUNIT)+0.5*(QQN-QQP))/FCPT
      RETURN
  600 XLM=(TR1+TR2)*0.5
      IF (DABS(TR-1.0) .GT. 1.0D-05 ) XLM=(TR1-TR2)/DLOG(TR)
      XLMTD(IUNIT)=XLM
      UA(IUNIT)=QU/XLMTD(IUNIT)
      IF(IPINCH(IUNIT).EQ.0) GO TO 50
      IF(IPINCH(IUNIT).EQ.IPIN) GO TO 51
      WRITE (6,1000)
   50 IPINCH(IUNIT)=IPIN
   51 IF(IPIN.LT.0) GO TO 52
      EFF(IUNIT)=(T4-T3)/(T1-T3)
      CAT(IUNIT)=TR1
      RETURN
   52 EFF(IUNIT)=(T1-T2)/(T1-T3)
      CAT(IUNIT)=TR2
      RETURN
      END
```

APPENDIX C.

ADVANCE TEXT OF ASHRAE PAPER

Pinch-Point Analysis: An Aid to Understanding the GAX Absorption Cycle

W.T. Hanna is a Senior Research Scientist; W.H. Wilkinson is a Senior Research Scientist (Ret.); J.H. Saunders is a Senior Research Scientist; and D.B. Philips is a Researcher, Thermal Systems Department, Battelle, Columbus OH.

William T. Hanna, Ph.D., Member ASHRAE
William H. Wilkinson, P.E., Member ASHRAE
James H. Saunders, Ph.D. and
David B. Philips

Abstract

The Generator-Absorber Heat Exchange (GAX) cycle is an absorption heat pump cycle that appears to offer the best potential for an efficient, gas-fired absorption heat pump for residential applications. The GAX cycles under development use the same ammonia/water working fluids and have many of the same components and functions as previous gas-fired absorption air conditioners, but with increased heat recovery and a higher coefficient of performance (C.O.P.). The distinguishing feature of the GAX cycle is the unique way that heat recovery is accomplished within the cycle. In this paper we show how a pinch-point analysis technique can be applied to illustrate how a GAX cycle operates and to highlight its capabilities. Pinch-point analysis, while not commonly used in the HVAC industry, is commonly used in the chemical process industries where internal heat recovery is a key aspect of process design.

Key Words

absorption, air conditioner, ammonia, commercial, heat exchange, heat pump, residential

Pinch-Point Analysis: An Aid to Understanding the GAX Absorption Cycle

Abstract

The Generator-Absorber Heat Exchange (GAX) cycle is an absorption heat pump cycle that appears to offer the best potential for an efficient, gas-fired absorption heat pump for residential applications. The GAX cycles under development use the same ammonia/water working fluids and have many of the same components and functions as previous gas-fired absorption air conditioners, but with increased heat recovery and a higher coefficient of performance (C.O.P.). The distinguishing feature of the GAX cycle is the unique way that heat recovery is accomplished within the cycle. In this paper we show how a pinch-point analysis technique can be applied to illustrate how a GAX cycle operates and to highlight its capabilities. Pinch-point analysis, while not commonly used in the HVAC industry, is commonly used in the chemical process industries where internal heat recovery is a key aspect of process design.

Introduction

Before describing the basic GAX cycle we will review the basic absorption heat pump system. Figure 1 (Wilkinson 1994) shows an absorption heat pump system as two integrated cycles: a refrigeration cycle and a power cycle. The refrigeration cycle has the typical components of such a cycle except the compressor, which is eliminated by the integration with the power cycle. In a vapor compression heat pump the power cycle is usually at the electric utility, and is coupled to the refrigeration cycle's compressor by an electric motor. The power cycle for a single-effect absorption cycle is shown in Figure 1. It is primarily the power cycle that is complicated by the thermodynamic improvements necessary to make the cycle sufficiently energy efficient to be generally competitive.

Consequently, the power cycle side of the absorption system is the focus of cycle improvements such as GAX. The power cycle is the focus of the following analysis.

The Thermodynamic Objective

To improve the performance of an absorption cycle it is necessary to generate as much refrigerant per unit of heat input as possible. A single-effect system, as shown in Figure 1, uses its driving heat input only once: to drive refrigerant vapor from the solution fed to the generator (desorber). Significant energy recovery occurs in the recuperative solution heat exchanger, reducing the heat input otherwise needed for sensible heating of the solution to its boiling point. This heat recovery is valuable because it reduces the heat input, even though it does not directly generate refrigerant vapor.

A double-effect absorption cycle uses two separate vapor generators: a first-effect generator that gets its driving heat from an external source and a second-effect generator that gets its heat from energy recovered from within the power cycle. The first-effect generator (heated by the external source) operates at a pressure high enough such that, when the refrigerant vapor it generates is condensed, the heat release during condensation heat release is at a sufficiently high temperature to drive a second-effect generator. This generator feeds refrigerant vapor to the refrigerant cycle condenser. Thus, the recovered heat directly generates additional refrigerant.

Like the double-effect cycle, other multiple-effect cycles (Ziegler and Alefeld 1994) provide their thermodynamic advantage in discrete steps. Triple-effect cycles are currently under development for commercial air conditioning applications and quadruple-effect cycles have been defined. In all these multiple-effect cycles discrete quantities of heat are recovered from within the cycle. The additional effects generate additional refrigerant by condensing the refrigerant vapor from a higher temperature generator to drive a lower temperature generator.

In contrast, the GAX cycle generates its additional refrigerant vapor from a variable amount of heat energy recovered from within the cycle. Under some conditions its performance approaches that of a double-effect cycle. Under less favorable conditions its performance diminishes toward that of an efficient single-effect cycle. The efficiency gains from a GAX cycle vary continuously with ambient temperature. This is because ambient temperature essentially controls the quantity of energy that can be recovered within the cycle.

State Point Analysis

Figure 2 shows a block diagram for the processes in a GAX heat pump. An advantage for the pinch-point method of cycle analysis is that one need not specify the components in the cycle or draw such a block diagram for the process before using the pinch-point technique. However, having such a diagram for reference during the following discussions may be of assistance for those not yet familiar with the technique and the GAX cycle. The diagram shows the condenser, precooler and evaporator of the refrigeration cycle, similar to those shown in Figure 1. The diagram also shows the generator, rectifier, three sections of absorber, solution pump, and the flow restrictor in the power cycle. The generator includes an external heat input and an internal heat recovery heat exchange process, since both processes are common to ammonia/water absorption cycles. Similarly, the absorber includes the GAX process and two other absorption processes that are common to current equipment.

Figure 3 shows the equilibrium state points [for temperatures between -40F (-40C) and 392F (200C) and pressures between 65 psia (452 kPa) and 275 psia (1910 kPa)] for the same GAX cycle with ammonia/water as the working fluid pair. Ammonia is the refrigerant and the ammonia/water solution is the absorbent. The water in the liquid solution is not the refrigerant, but its volatility, though significantly less than that of ammonia, adds complexity to any practical ammonia/water cycle. In particular, rectification of the vapor before it enters the condenser strips water vapor from the vapor flow and feeds a reflux of liquid back to the generator. A similar stripping process also may occur in the primary generator in a section sometimes called an "analyzer".

Point 1 on Figure 3 is the condensation equilibrium point defining the saturated liquid state leaving the condenser. The condenser establishes the high pressure in the system so equilibrium line 1-2-3 is the high pressure in the system. The process between state points 2 and 3 represents the desorption process that generates refrigerant vapor. Point 2 is the ideal state point at which the liquid solution (sometimes called "strong solution") is in equilibrium with vapor leaving the generator at its ideal state point. Point 3 represents the condition of the liquid (weak solution) leaving the generator in equilibrium with the highest temperature vapor liberated in the generator. The vapor at point 3 can contain as much as 70 percent water vapor. At point 2, the equilibrium water content in the vapor is only 5 percent. This progressive change in equilibrium conditions strongly affects the configuration of the desorption (vapor generation) equipment design.

Point 1_R is a typical equilibrium condition for vapor leaving the rectifier at less than 1 percent water content. The energy released in the rectification process, between points 2 and 1_R, is not always easily recoverable and will not be included in our assessment of primary energy flows in the power cycle portion of the absorption system. Our final analysis will show why the rectification energy is often ignored as a source of recoverable energy.

The low pressure in the system is defined by the evaporation temperature, point 6. The pressures at points 4, 5, and 6 are essentially equal. Point 4 is the temperature to which the (weak) liquid leaving the vapor generator (at point 3) should be cooled to be in equilibrium at the evaporator pressure. The equilibrium vapor at point 4 can contain as much as 50 percent water vapor. The liquid in the absorber is cooled from point 4 to point 5 so it can absorb refrigerant vapor from the evaporator. The solution leaving the absorber is fed to the solution pump at condition 5. In the sump at the solution pump inlet the equilibrium vapor composition is slightly more than 1 percent water. These changing vapor equilibrium conditions also affect the geometric configuration of the absorber.

Figure 2 shows the possibility for three sections of an absorption process, one for heat output, or heat rejection, and two for cycle heat recovery. These are the Hydronically-Cooled Absorber (HCA), the Absorber Heat Exchanger (AHE), and the Generator Absorber

Heat Exchanger (GAX) respectively. We can see in Figure 3 that the temperature at point 4, T_4, is higher than T_2, so the desorption process between T_2 and T_2a can be driven by energy released during the absorption process between T_4 and T_{4a}. This coupled set of desorption and absorption processes is the Generator, Absorber, heat eXchange that gives the GAX cycle its name. But which limit ($T_{2a} = T_4$ or $T_{4a} = T_2$) dominates? Intuition, based on the reduced mass flow in the absorption process relative to the desorption process, would suggest that the temperature difference between points 2 and 4_a would define the heat transfer limit. The quantity of energy that can be actually recovered in a GAX depends not only upon the operating temperature, concentrations, and flow rates but also on the GAX configuration and the size of other components in the system. A detailed analytical tool is needed to clarify the options and define their performance so the optimal definition of the cycle and its components can be made.

Cycle Modeling Alternatives

At this point in a conventional cycle analysis components must be assembled into a potential system, where the selection of components is based on the designer's experience and objectives. Complex computer simulations (Grossman and Wilk 1993) locate the system's components in relation to the equilibrium properties, as on Figure 3. Iterative procedures balance the composition, mass, and energy flows to a high degree of precision. With such models, unless one uses more than one module to describe each cycle component, the internal processes in each cycle component are hidden within the equations and assumptions made for each of the components.

This approach requires that the components be defined and sized in some way before the analysis can begin. Defining and sizing the components requires some consideration of the processes involved, of course, but the focus is primarily on the components. The advantage of this approach is that the final results are a set of component sizes and cycle performance predictions, made to a high degree of precision from a common set of assumptions. The final results are exactly what is needed to begin designing components for

system development. The difficulties are that the computer models are not easy to set up in many cases and, unless multiple modules are used to analyze key components, internal process information is not explicitly shown to the cycle modeler.

An alternative method for conducting cycle analyses is the pinch-point technique, which focuses on the processes in the cycle without explicitly requiring the definition or sizing of discrete components. This technique, as we present it, is perhaps a simpler, almost pictorial approach that provides additional insight into the nature of the ideal processes that occur between key cycle state points. The technique provides graphical information on how closely the state points and the internal points of the heat recovery processes may approach each other. This is the essence of the "pinch-point," the closest practical approach temperature within the cycle.

The pinch-point analysis establishes the design requirements for the components for optimum thermodynamic advantage given the processes that must occur to complete the cycle and the specific operating conditions. The analysis clarifies the thermodynamic compromises that result from alternative component choices made to better satisfy manufacturing or control objectives. Even more important, pinch-point analysis can show that the optimum components for one set of state points are not necessarily optimum for another. Again, component-switching alternatives quickly become obvious. The disadvantage of this approach is that the results are less detailed than those that naturally flow from the more detailed models. Such detailed considerations can be added to the approach, of course. The advantage of the pinch-point technique is the ease with which the analyst can view the details of the internal processes of the cycle and view the implications of cycle alternatives. The technique provides an excellent basis for setting up the more detailed computer models and understanding the significance of the results they can provide.

Pinch-Point Analysis

The classical approach to analyzing a cycle and determining component design requirements is to use a powerful computer model to analyze a large number of specific design alternatives operating at a number of different state points (ambient conditions). In such an analysis points 2, 3, 4, and 5 in Figure 3 are easy to define for each state point set, while points 2a, 2b, 4a, and 4b in Figure 3 are very difficult to define, so the power of the computer model is appreciated.

An alternative is to use the pinch-point analysis technique, where the critical step is to calculate and plot the energy release for all the processes in the cycle. The absorption heat pump cycle shown in Figure 3 has two major processes of interest in the power cycle, a heating and desorption process (points 5 to 3) and a cooling and absorption process (points 3 to 5). The technique is based upon plotting the energy versus temperature curves for these processes on two plots using the same temperature and energy scales. Since we are ultimately interested in energy flows in the processes, the choice of the zero energy state can be arbitrary. Hence we choose to consider the energy at the rectifier outlet or the pump inlet/ absorber outlet (for cases where the rectifier heat is recovered into the power cycle) to be our reference, or zero state.

For the cooling and absorption process we plot the energy released as a function of temperature going backwards in the process from point 1R through the rectifier to point 5, to point 4, to point 3, as a continuous function. Energy release is plotted on the abscissa and the corresponding temperature is plotted on the ordinate as shown on Figure 4. This can be done for one pound (.45 kg) of solution flowing (per unit time) from point 3 to point 4 with the other flow rates defined by conservation of mass equations and assumptions for the approach to equilibrium where the flows split. The results plotted in all the figures were scaled [for temperatures up to 395F (202C) and energy rates to 120,000 Btu/hr (35kW)] to a generator heat input of 36,000 Btu/hr (10.5 kW), a heat input rate typical of a residential GAX air conditioner.

We follow the same procedure for the heating and desorption process from point 5x to point 2, to point 3x. Essentially the same amount of water flows from point 5x to point 2 as from point 3 to point 4, but the latter flow has very little ammonia in it so the total liquid flow from point 3 to point 4 is smaller. The heating curve is plotted by adding the expected value of the total power cycle heat output to all the energy values calculated by the process model. The result, shown in Figure 4, is a set of two energy versus temperature curves, one for each process with a displacement in energy and temperature between the two curves. The temperature differences between the two curves provide the basis for the pinch-point analysis. By changing the value for the total power cycle heat output, the relative position of the two curves is changed and the pinch-point is changed. The energy difference between points 3 and 3x defines the fired heat that must be added to the generator to complete the processes.

The cooling curve defined by points 3, 4, 4a, 4b, and 5 shows the heat released by the sensible solution cooling and the absorption processes between the generator exit and the absorber exit. Calculating the path between points 3 and 4 is relatively simple since this is a sensible cooling process for liquid solution. The path between points 4 and 5 is slightly more complex since there is absorption of vapor into the solution coupled with solution cooling. The curve is defined by analyzing the absorption process over a number of temperature intervals and their corresponding near-equilibrium concentrations.

Similarly, the heating curve consists of sensible heating sections and a step-wise calculation of the desorption process. By sliding the heating curve from right to left (by varying the total power cycle heat output) the heat exchange limit becomes obvious when point 2 touches the cooling curve. This condition represents the physically impossible situation where there is no temperature difference available to drive a portion of the heat transfer, since the heating and cooling curves are touching. We have, however, defined the pinch-point for the processes, the point of closest approach. Clearly, for realistic system designs the heating and cooling curves must be displaced in temperature.

However, the farther the heating curve can be placed to the left, beneath the cooling curve, the smaller the external energy (between points 3 and 3x) that must be supplied by the combustion source - and, consequently, the higher the system efficiency. Of course, the internal heat exchanges become larger and the driving potentials for these larger heat exchanges become smaller the closer the two curves approach. The result, in the extreme, can be large and costly internal heat exchangers. Further, the energy difference between points 5 and 5x represents the external cooling required by the absorber. Moving the heating curve to the left as far as is practical clearly defines the minimum external heat transfers for the power cycle. Opportunities for economic trade-offs are quickly exposed by this kind of pinch-point analysis and the minimum acceptable pinch-point temperature difference is established.

Insights into Component Design

When heat transfer is coupled with mass transfer in a gravity-driven, falling-film flow, a free liquid surface is required. These conditions determine the heat exchanger's configuration. For example, referring to Figure 4, in a GAX component a gravity-driven absorption process from 4 to 4a would require the solution to enter at 4 and flow downward to 4a. The coupled energy flow, however, is desorption, which also could be limited to a gravity-driven flow where solution enters at 2 and flows downward to 2a. When both processes are carried out in falling-film flows, the heat exchange process is in parallel flow and the critical pinch temperature difference is between 4a and 2a, a much more limiting situation than the counter-flow configuration shown in Figure 4. Hence, the desire is not to use a falling-film design approach for both the generator and the absorber in a GAX, despite the high heat and mass transfer rates possible in such designs.

Since it is more convenient to have falling-film combined mass and heat transfer occur on the outside of heat exchanger tubes, a hydronic run-around loop can transfer heat between the absorber and desorber of the GAX and each hydronic heat exchanger can have a counter-flow configuration. Such a configuration was considered in early GAX

developments. It is also possible to extend the hydronic coupling to include one, or both, of the sensible solution heat exchanges. This configuration option is shown on Figure 5 by the dotted line A-B-C-D. The solution heat exchangers are larger for this hydronically-coupled case than for a direct heat transfer case because of the reduction in driving temperature differences. Control advantages may result from this configuration since switching to the low temperature operating configuration can be accomplished by switching hydronic flows, not solution flows.

Operation at Colder Ambient Temperatures

The conditions of Figure 3 represent either air conditioning or heat pumping in warm ambient temperatures. These conditions define the GAX components implied by Figures 4 and 5. Heat pumping at colder ambient temperatures, however, changes state points and processes. Figure 6 shows the changes imposed by lowering the evaporation temperature from 35F (2C), as shown in Figure 3, to -10 F (-23C) and 23 psia (162 kPa), keeping the same condenser and absorber exit temperatures and the same minimum ammonia concentration for simplicity. Repeating the analysis for the fired heat input rate as in Figure 4 results in some obvious changes:

- the slopes of the energy curves have all become higher (as can be seen by comparing Figures 4 and 7), indicating that more flow must be established to obtain the same refrigerant production.

- the amount of energy required from the external fired source has increased, indicating a reduced system efficiency.

- temperature T_4 is now less than T_2 so there is no absorption energy release at a sufficiently high temperature to generate vapor. The GAX heat exchange potential has disappeared.

- a liquid solution-to-solution heat exchange process is the only means to recover some of the cycle heat (points 3y to 4 and 5y to 2) representing a process and component not needed or wanted in the GAX operating modes.

If, for instance, a hydronic run-around loop covers only the B-C circuit (part of the A-B-C-D circuit shown in Figure 5), it must be stopped and a solution-to-solution heat exchange process added.

The need for these changes is easy to see by comparing Figures 4 and 7. In the cold ambient heating mode shown in Figure 7, not only is there no potential for GAX heat exchange, but the maximum capacities for the other internal heat exchanges are also reduced. A cycle in which the heat recovered from the absorber can be used only to preheat the solution leaving the pump is called an Absorber Heat Exchange (AHE) cycle. This transition from GAX operation to AHE operation is one of the unique characteristics of the GAX cycle. As Figure 7 shows, however, when the ambient temperature is sufficiently low the cycle can utilize a solution-to-solution heat recovery process, in addition to the AHE process. Note on Figure 7 that there is an area of heat input to the absorption process, just as the process is begun. This represents the heating required to bring the vapor up to the equilibrium temperature for the absorber conditions. This effect is not so easy to visualize in a lumped-parameter model because the net heat transfer is out of the absorber in all cases.

Insights into Component Configuration

An interesting control option is illustrated in Figure 8 where the cycle utilizes the full hydronic coupling (A-B-C-D) illustrated in Figure 5 for warmer conditions. To illustrate this, consider the cold hydronic fluid at (T_A) that is pumped to cool the absorber. In Figure 5, this hydronic fluid is heated to T_C before it leaves the absorber; in Figure 8, this hydronic fluid can only be heated to T_B before it leaves the absorber. The matching solution condition is point 4 in both figures, and there has been no connection change. The hydronic fluid heated by the absorber leaves the absorber and enters the concentrated solution (strong liquid)

heat exchanger, leaving at T_D. The hydronic fluid cools the solution in counter-flow from point 3 to point 4. This process description applies to both Figure 5 and to Figure 8.

The return flow of hot hydronic fluid is cooled in counter-flow from T_D to T_A delivering heat first to the desorption process from points 2 to 2b, and then to heating the dilute (rich) solution from points 5 to 2 in Figure 5. The difference between Figures 5 and 8 is that in Figure 5 the GAX process between points 2-2a and 4-4a is replaced in Figure 8 by a solution-to-solution heat exchange process between points 5y-2 and 3y-4. This is one example of the convenience with which equipment alternatives can be visualized and analyzed.

Heat Recovery from Rectification

As shown on both Figures 3 and 6, the rectification process strips water vapor from the vapor flow entering the rectifier at point 2 so that the vapor flow enters the condenser at a condition represented by point 1R. This unwanted water (accompanied by some ammonia) is returned to point 2 as a liquid reflux stream. Ammonia in the reflux is progressively exchanged for water from the vapor flow in a process that releases heat. Ideally this heat can be released between temperatures T_2 and T_{1R}, and this heat can be added to the heat release curve as shown in Figures 9a and 9b.

Ignoring the physical complexity of recovering this ideal heat flow from the rectification process, the energy involved is not large. In the cold ambient heat pumping case (Figure 9a), ideal recovery of rectification heat permits the heating curve to be pushed farther to the left under the cooling curve, thus improving cycle efficiency. This is because the highest rectifier temperature is higher than the pinch-point temperature, so the rectification heat can affect the location of the pinch-point. For the cases shown in Figures 7 and 9a, the heat input to the power cycle is held constant, so the power cycle heat flows are nearly identical, but the refrigerant flow rate is increased 9 percent by the addition of the rectifier heat to the power cycle.

Figure 9b, however, shows that the pinch-point is unaffected by recovering rectification energy in warm ambient because the highest rectification temperature is less than the solution temperature at the pinch-point. Consequently, there is no increase in refrigerant flow and no thermodynamic incentive for recovering the rectification energy into the power cycle except for cold ambient operations.

Conclusions

We have shown how pinch-point analysis can guide the analysis of promising equipment design trade-offs by first focusing on the processes and then considering the components needed. In this paper we have shown the unique transitions in cycle behavior that have made the GAX cycle attractive, but which also make cycle and component design difficult. The pinch-point curves graphically show how important internal energy recovery is to cycle efficiency. They can also show where design choices can be made for design or manufacturing convenience without adversely affecting cycle performance.

References

Grossman, G. and M. Wilk 1993. Oak Ridge National Laboratory Report ORNL/Sub/91-SH641/1 "Enhanced Absorption Cycle Computer Model", September 1993

Wilkinson, W.H. 1994. Absorption Cooling: A Viable Option for Today and Tomorrow. ASHRAE Journal 36(2):41-44.

Ziegler, F. and G. Alefeld 1994. Comparison of Multi-Effect Absorption Cycles. Proceedings of the International Absorption Heat Pump Conference. ASME AES-31, New Orleans.

Figure Captions

Figure 1 Schematic Diagram of a Single-Effect Absorption Cooling System

Figure 2 Process Block Diagram for a GAX Heat Pump

Figure 3 Equilibrium Diagram of an Ammonia/Water Absorption System for Air Conditioning or Warm Ambient Heat Pumping Conditions

Figure 4 Pinch-Point Diagram Showing Power Cycle Heat Flows for Air Conditioning and Warm Ambient Heat Pumping Conditions

Figure 5 Pinch-Point Diagram Showing Power Cycle Heat Flows for Air Conditioning and Warm Ambient Heat Pumping Conditions with a Hydronic Loop for Cycle Heat Recovery

Figure 6 Equilibrium Diagram of an Ammonia/Water Absorption System for Cold Ambient Heat Pumping Conditions

Figure 7 Pinch-Point Diagram Showing Power Cycle Heat Flows for Cold Ambient Heat Pumping Conditions

Figure 8 Pinch-Point Diagram Showing Power Cycle Heat Flows for Cold Ambient Heat Pumping Conditions with a Hydronic Loop for Cycle Heat Recovery

Figure 9a Pinch-Point Diagram Showing Power Cycle Heat Flows for Cold Ambient Heat Pumping Conditions with Ideal Rectifier Heat Recovery

Figure 9b Pinch-Point Diagram Showing Power Cycle Heat Flows for Air Conditioning and Warm Ambient Heat Pumping Conditions with Ideal Rectifier Heat Recovery

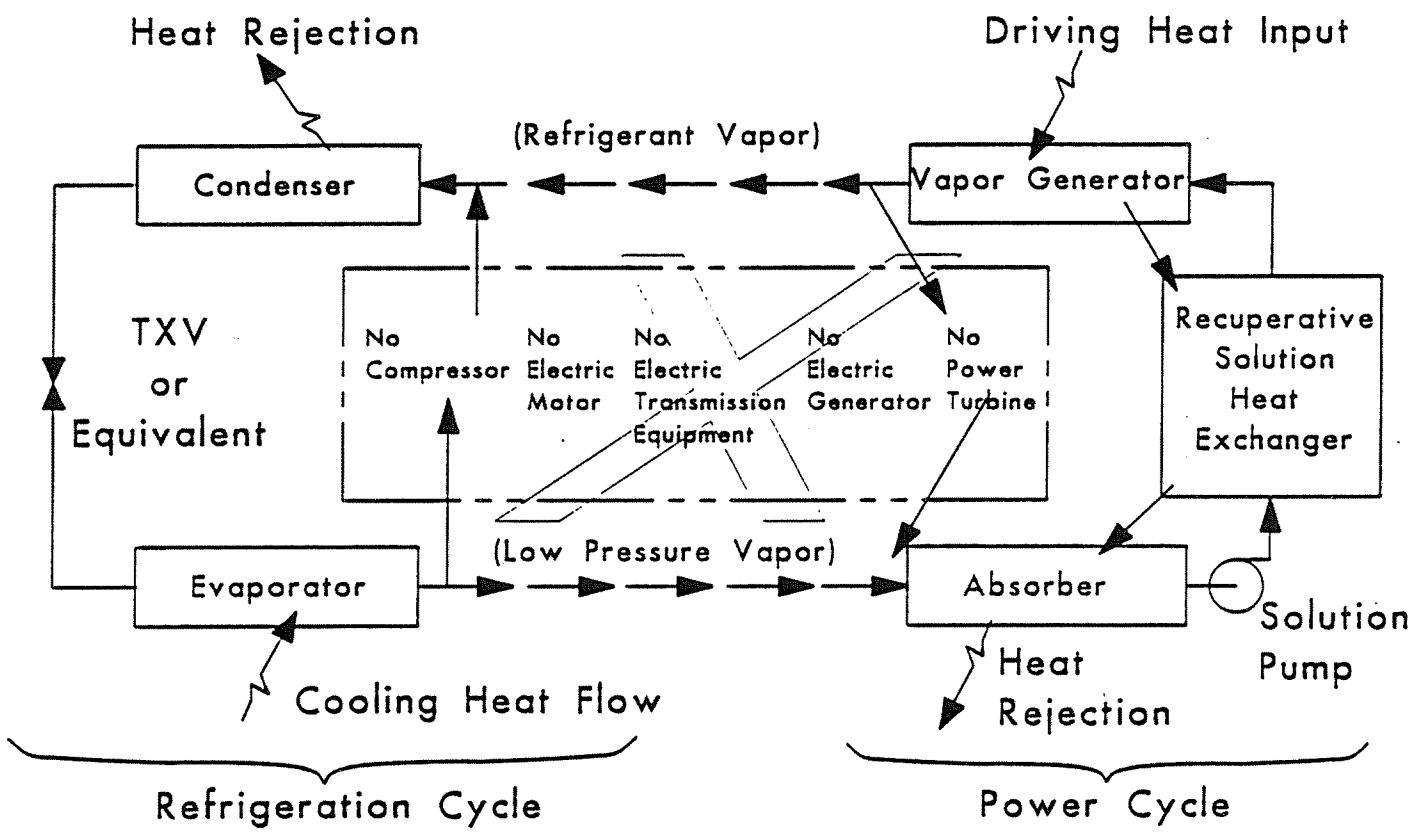
Heat Rejection
Driving Heat Input
(Refrigerant Vapor)
Condenser
Vapor Generator
TXV
or
Equivalent
No
Compressor
No
Electric
Motor
No
Electric
Transmission
Equipment
No
Electric
Generator
No
Power
Turbine
Recuperative
Solution
Heat
Exchanger
(Low Pressure Vapor)
Evaporator
Absorber
Solution
Pump
Heat
Rejection
Cooling Heat Flow
Refrigeration Cycle
Power Cycle

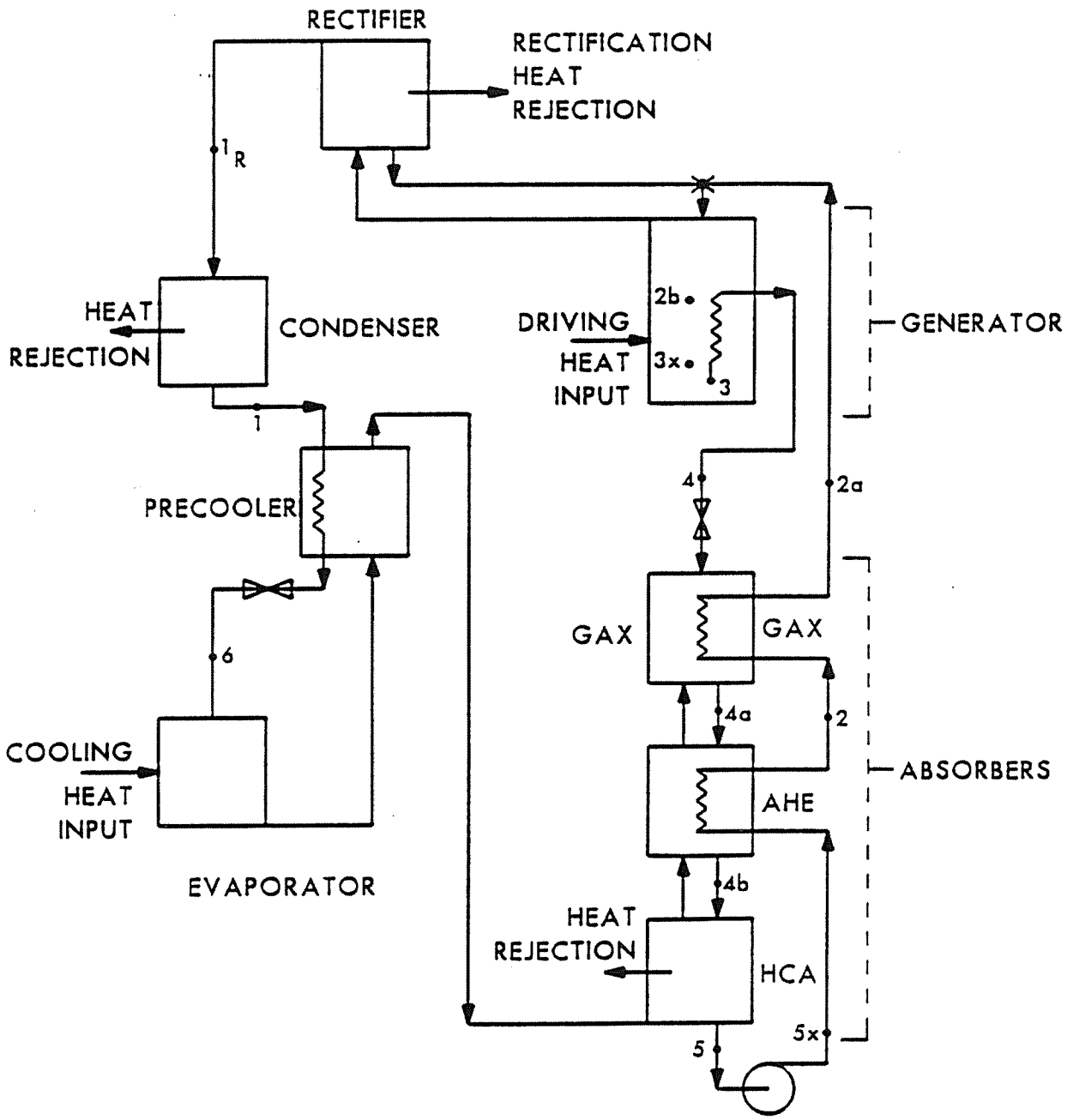
RECTIFIER
RECTIFICATION
HEAT
REJECTION
1R
HEAT
REJECTION
CONDENSER
1
PRECOOLER
6
COOLING
HEAT
INPUT
EVAPORATOR
DRIVING
HEAT
INPUT
2b
3x
3
GENERATOR
4
2a
GAX
GAX
4a
2
ABSORBERS
AHE
4b
HEAT
REJECTION
HCA
5
5x

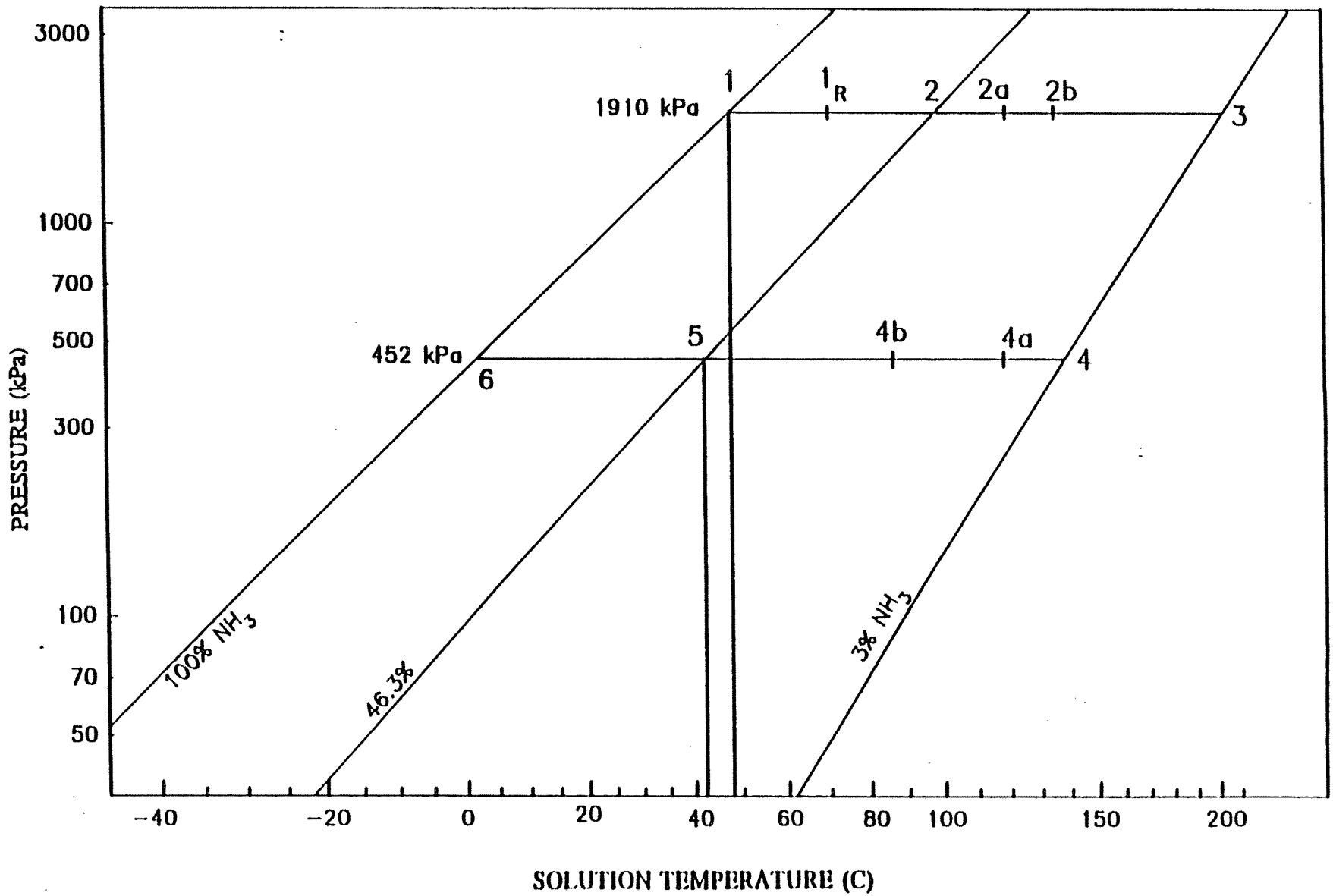
3000
1000
700
500
300
100
70
50
PRESSURE (kPa)
1910 kPa
452 kPa
1
1R
2
2a
2b
3
4
4a
4b
5
6
100% NH3
46.3%
3% NH3
-40
-20
0
20
40
60
80
100
150
200
SOLUTION TEMPERATURE (C)

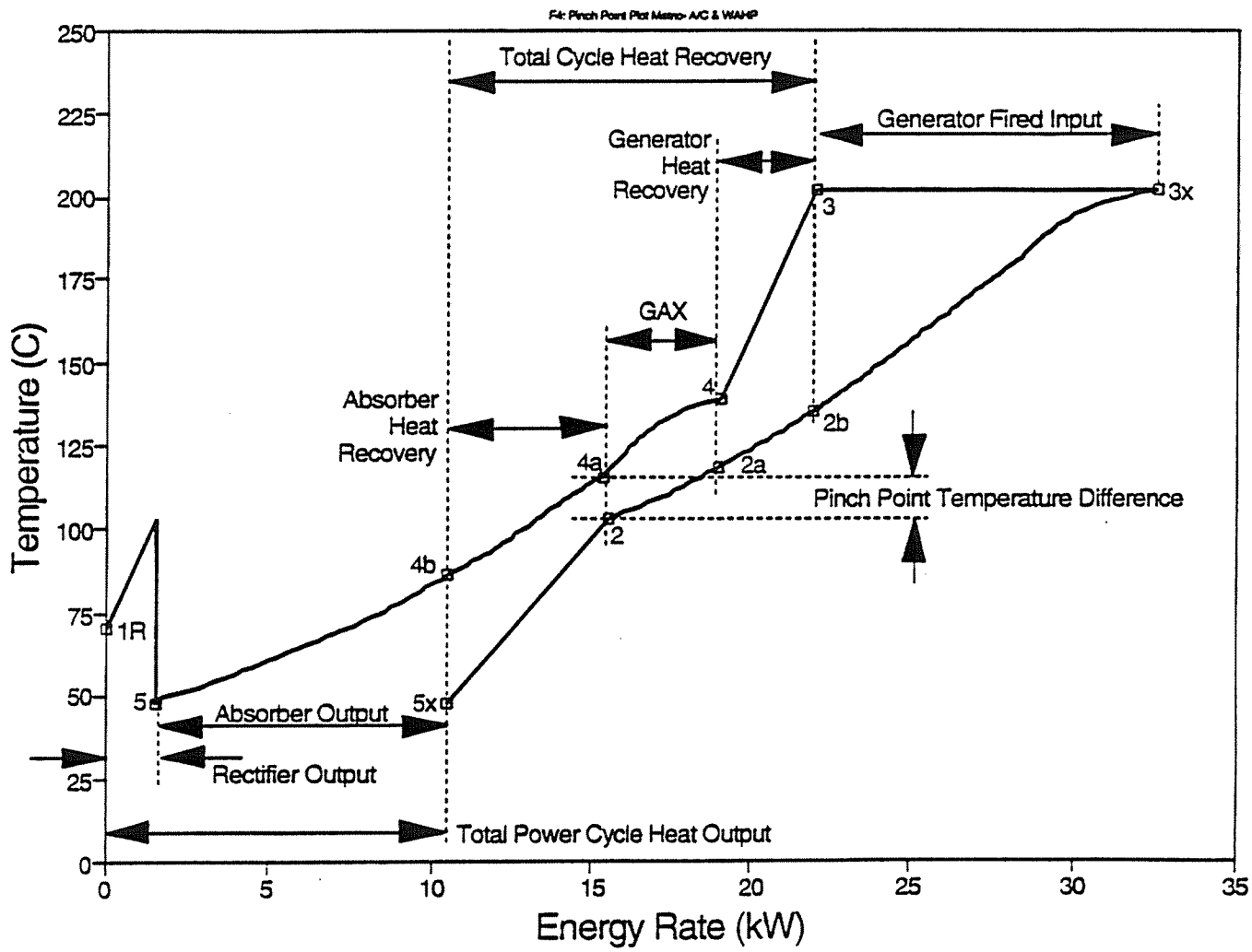
F4: Pinch Point Plot Metro- A/C & WAHP
Total Cycle Heat Recovery
Generator Fired Input
Generator Heat Recovery
GAX
Absorber Heat Recovery
Pinch Point Temperature Difference
Absorber Output
Rectifier Output
Total Power Cycle Heat Output
1R
5
5x
4b
4a
4
2
2a
2b
3
3x
Temperature (C)
Energy Rate (kW)
0
25
50
75
100
125
150
175
200
225
250
0
5
10
15
20
25
30
35

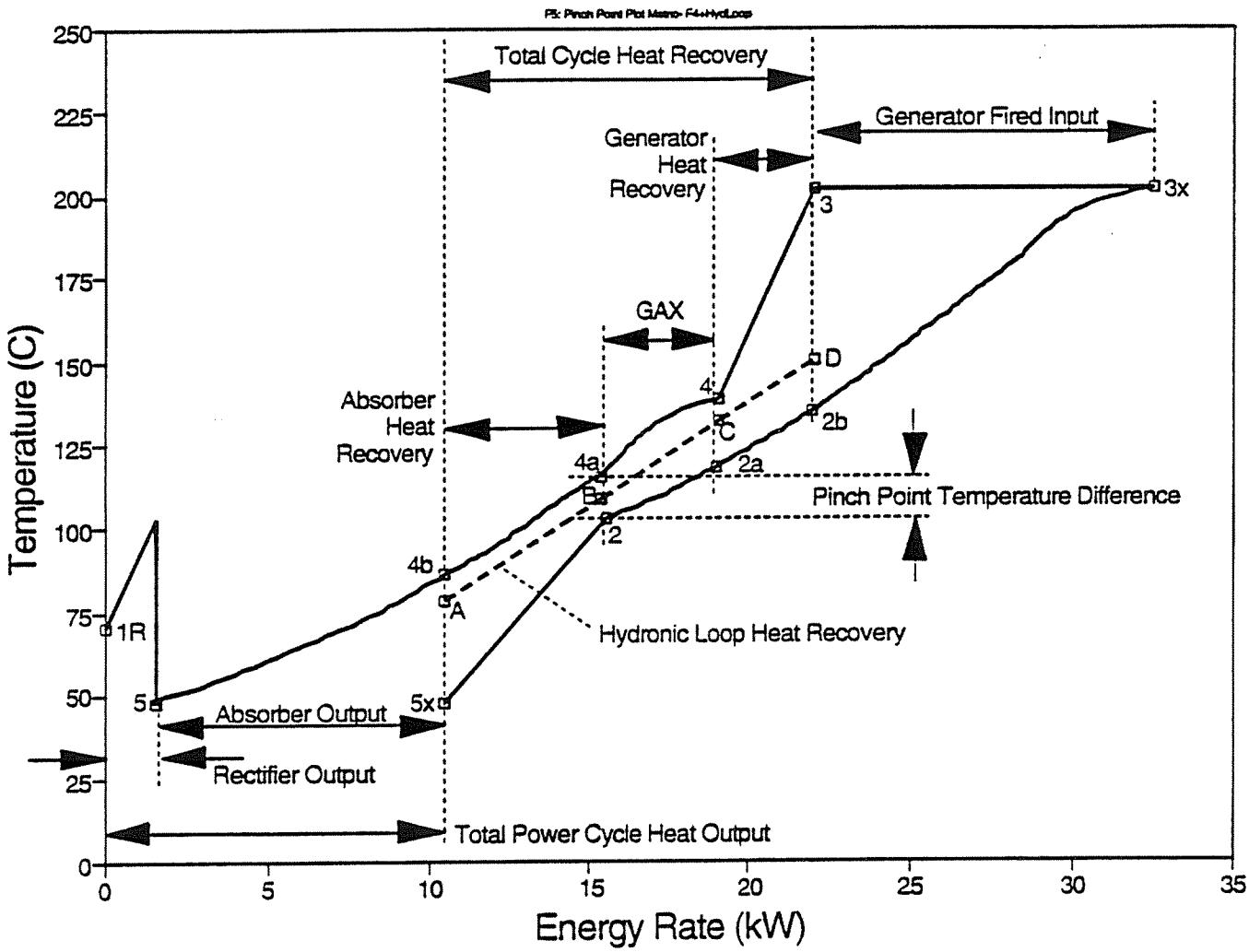
Total Cycle Heat Recovery
Generator Fired Input
Generator Heat Recovery
GAX
Absorber Heat Recovery
Pinch Point Temperature Difference
Hydronic Loop Heat Recovery
Absorber Output
Rectifier Output
Total Power Cycle Heat Output
1R
5
5x
4b
A
4a
B
2
4
C
2a
2b
D
3
3x
Temperature (C)
Energy Rate (kW)
0
25
50
75
100
125
150
175
200
225
250
0
5
10
15
20
25
30
35

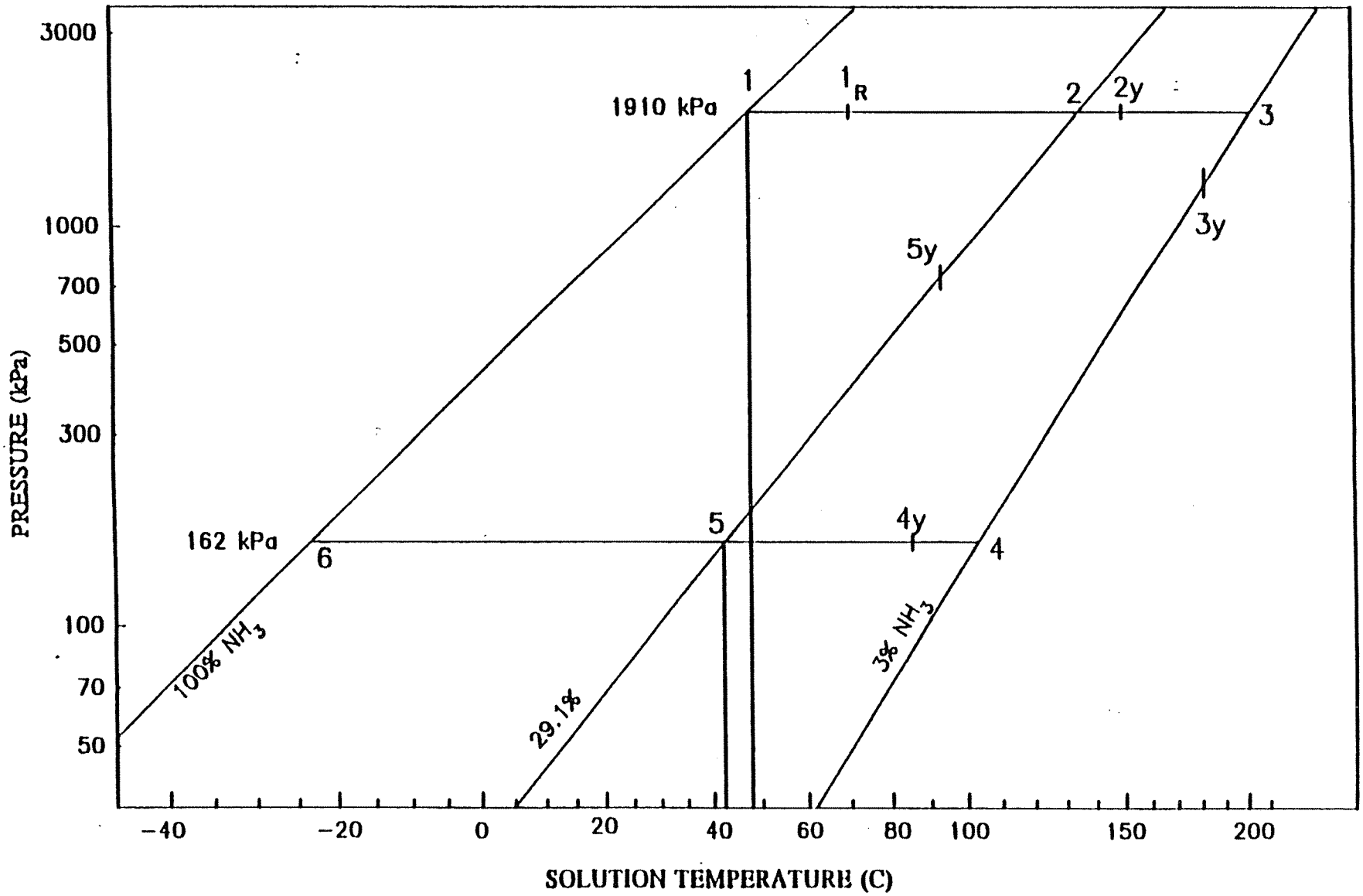
3000
1000
700
500
300
100
70
50
PRESSURE (kPa)
1910 kPa
162 kPa
1
1R
2
2y
3
3y
4
4y
5
5y
6
100% NH3
29.1%
3% NH3
-40
-20
0
20
40
60
80
100
150
200
SOLUTION TEMPERATURE (C)

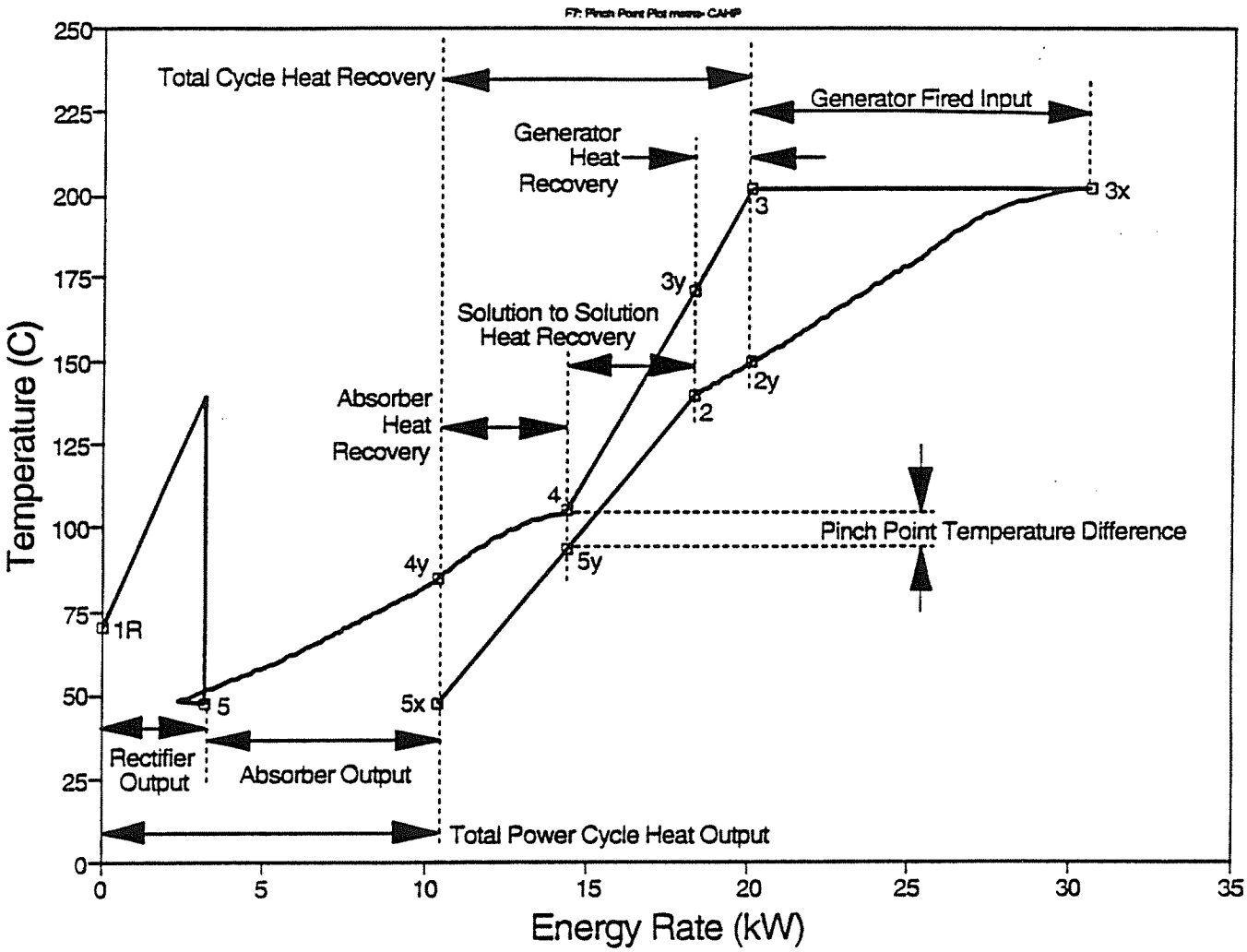
Total Cycle Heat Recovery
Generator Fired Input
Generator Heat Recovery
Solution to Solution Heat Recovery
Absorber Heat Recovery
Pinch Point Temperature Difference
Rectifier Output
Absorber Output
Total Power Cycle Heat Output
1R
5
4y
5x
4
5y
2
2y
3y
3
3x
Temperature (C)
Energy Rate (kW)
0
25
50
75
100
125
150
175
200
225
250
0
5
10
15
20
25
30
35

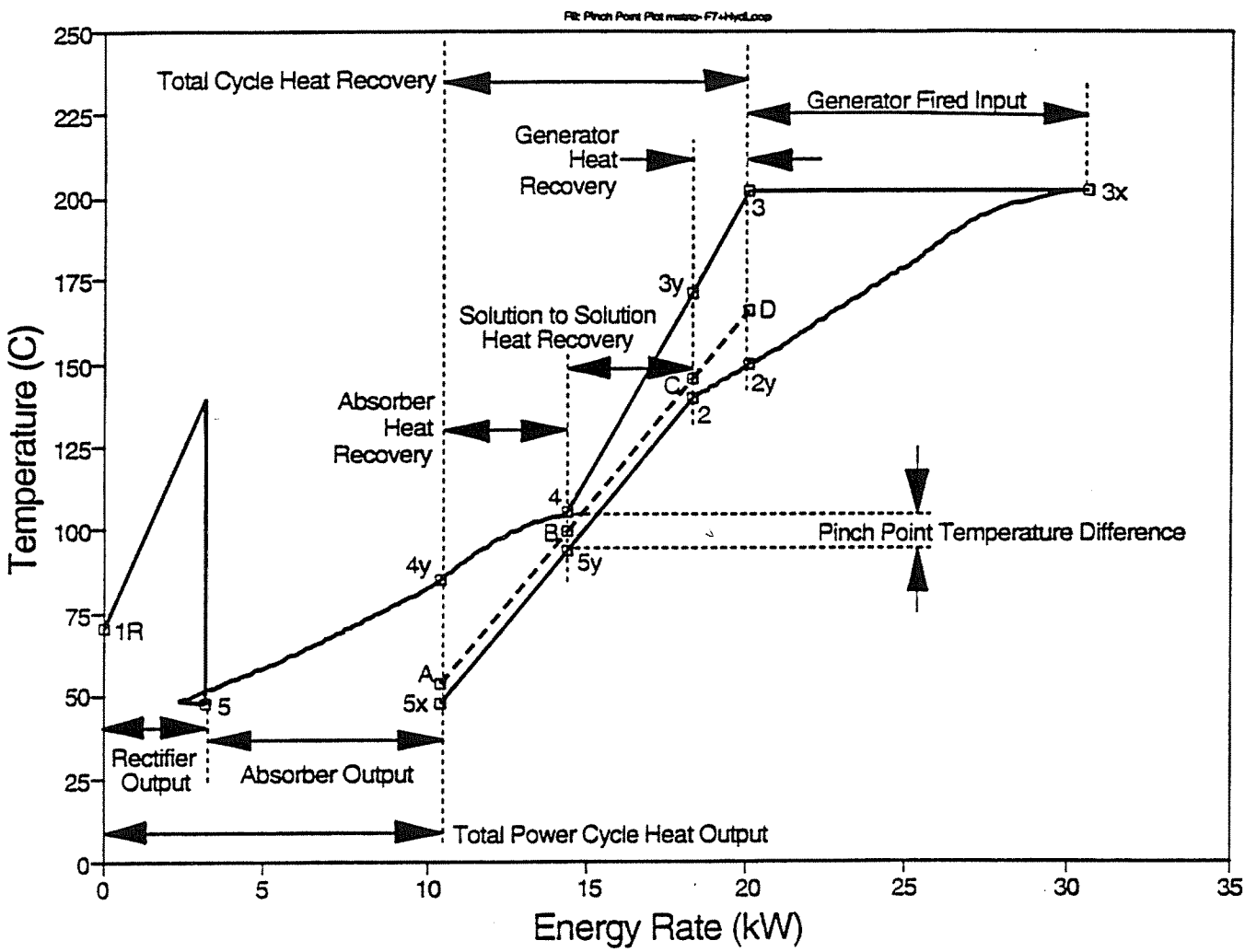
Total Cycle Heat Recovery
Generator Fired Input
Generator Heat Recovery
Solution to Solution Heat Recovery
Absorber Heat Recovery
Pinch Point Temperature Difference
Rectifier Output
Absorber Output
Total Power Cycle Heat Output
1R
5
4y
A
5x
B
4
5y
C
2
2y
3y
D
3
3x
Temperature (C)
Energy Rate (kW)
0
25
50
75
100
125
150
175
200
225
250
0
5
10
15
20
25
30
35

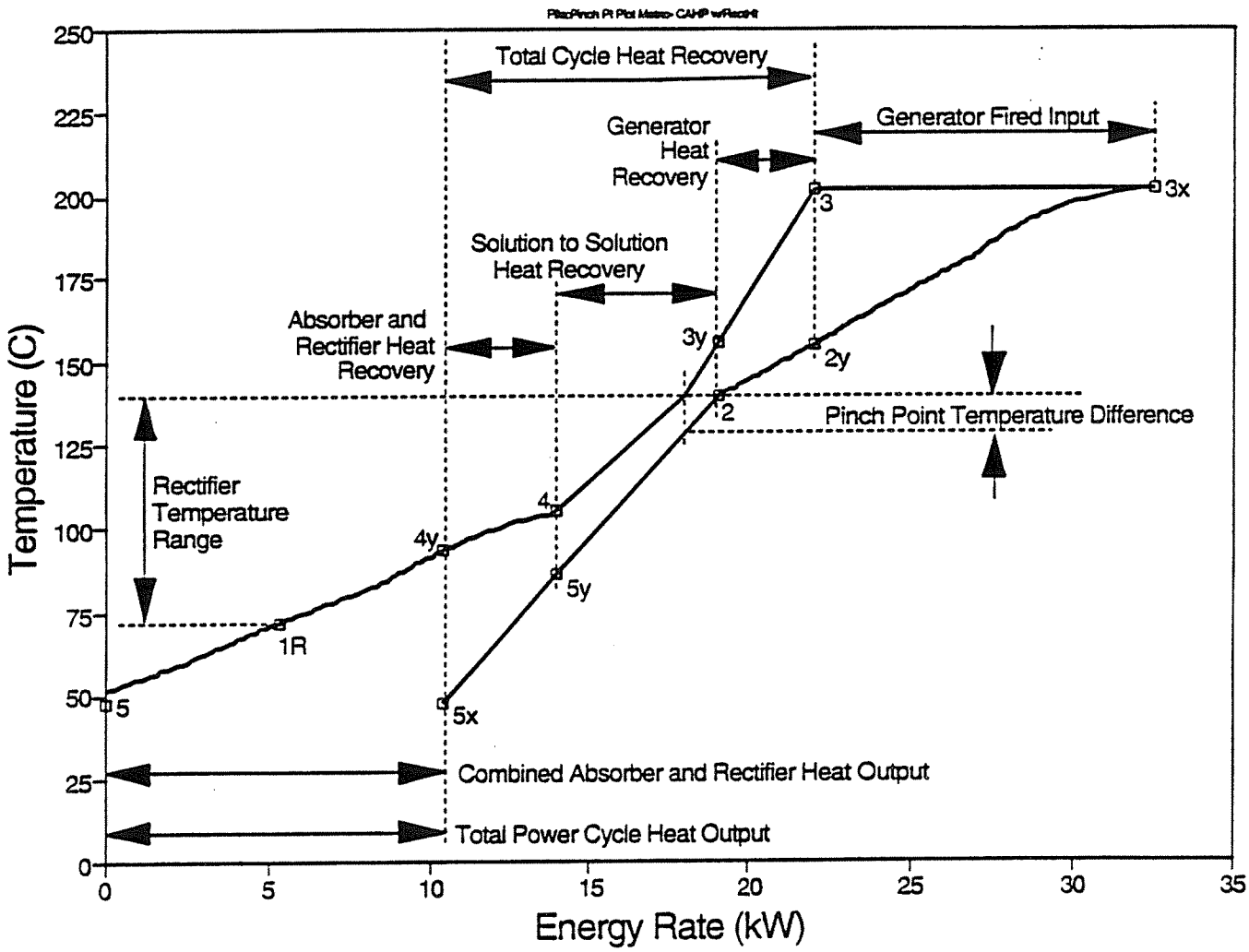
Total Cycle Heat Recovery
Generator Fired Input
Generator Heat Recovery
Solution to Solution Heat Recovery
Absorber and Rectifier Heat Recovery
Rectifier Temperature Range
Pinch Point Temperature Difference
Combined Absorber and Rectifier Heat Output
Total Power Cycle Heat Output
3
3x
3y
2y
2
4
4y
5y
1R
5
5x
Temperature (C)
Energy Rate (kW)
0
25
50
75
100
125
150
175
200
225
250
0
5
10
15
20
25
30
35

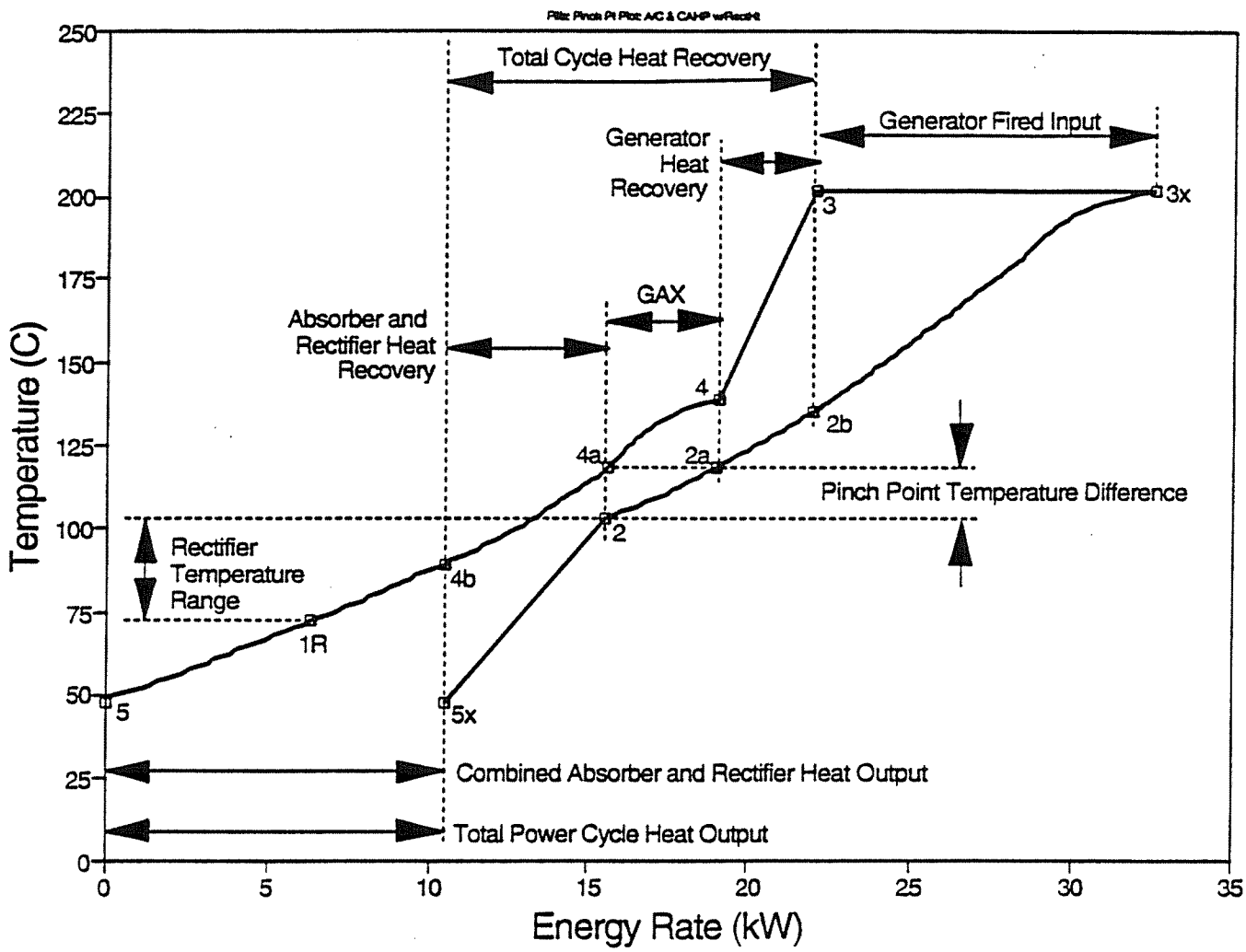
Total Cycle Heat Recovery
Generator Fired Input
Generator Heat Recovery
GAX
Absorber and Rectifier Heat Recovery
Pinch Point Temperature Difference
Rectifier Temperature Range
Combined Absorber and Rectifier Heat Output
Total Power Cycle Heat Output
3
3x
4
2b
4a
2a
2
4b
1R
5
5x
Temperature (C)
Energy Rate (kW)
0
25
50
75
100
125
150
175
200
225
250
0
5
10
15
20
25
30
35

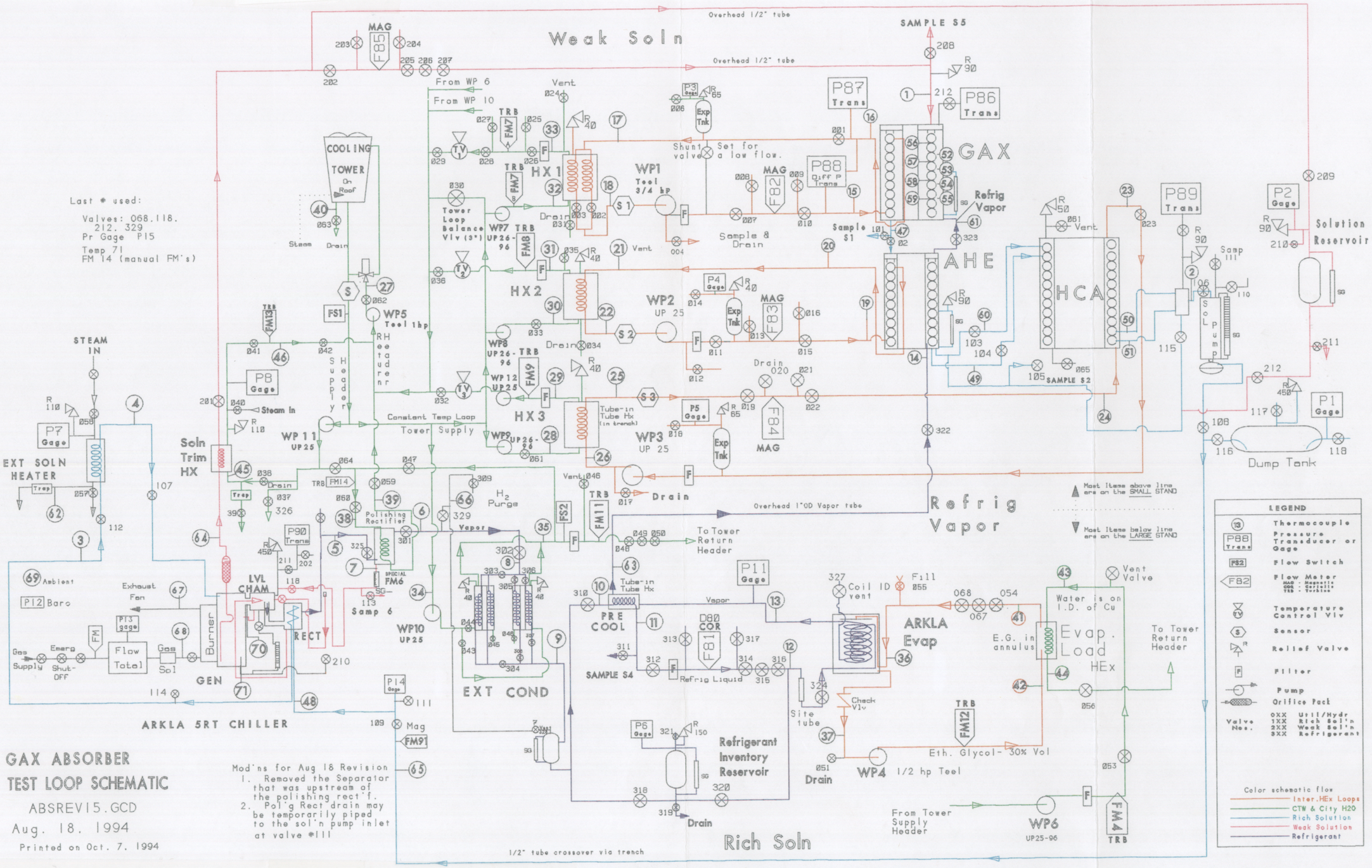

Last # used:

Valves: 068.118. 212. 329
Pr Gage P15
Temp 71
FM 14 (manual FM's)

Mod'ns for Aug 18 Revision
1. Removed the Separator that was upstream of the polishing rect'f.
2. Pol'g Rect'drain may be temporarily piped to the sol'n pump inlet at valve #111

GAX ABSORBER
TEST LOOP SCHEMATIC
ABSREV15.GCD
Aug. 18. 1994
Printed on Oct. 7. 1994

Figure 29. Absorber Test Loop Schematic