CONF-8510218

FILE COPY
DO NOT
REMOVE

Proceedings of the National Workshop

FIELD DATA ACQUISITION FOR BUILDING AND EQUIPMENT ENERGY-USE MONITORING

SHERATON DALLAS HOTEL & TOWERS
DALLAS, TEXAS
OCTOBER 16-18, 1985

Sponsored by

- U.S. Department of Energy
  Office of Buildings and Community Systems
- Oak Ridge National Laboratory

Organizing Committee

George E. Courville
Oak Ridge National Laboratory

Phillip D. Fairchild
Oak Ridge National Laboratory

Ronald J. Fiskum
U.S. Department of Energy

James E. Griffith
Public Service Electric and Gas Research Corp.

Richard A. Grot
National Bureau of Standards

David T. Harrje
Princeton University

James A. Heidell
Pacific Northwest Laboratory

Carl C. Hiller
Electric Power Research Institute

Ralph Jones
Brookhaven National Laboratory

William E. Krauss
Gas Research Institute

Terry L. Logee
Vitro Corporation

Max Sherman
Lawrence Berkeley Laboratory

Sam Tagore
U.S. Department of Energy

Larry Windingland
Construction Engineering Research Laboratory

Workshop Staff

Technical Coordinator	*Kay H. Zimmerman*
Secretary / Treasurer	*Teresa J. Simmons*
Coordinator	*Bonnie S. Reesor*
Technical Editors	*George C. Battle, Jr.* *Vivian A. Jacobs* *Raleigh Powell*

Graphic Design by Vickie L. Conner

CONF-8510218

Proceedings of the National Workshop

FIELD DATA ACQUISITION FOR BUILDING AND EQUIPMENT ENERGY-USE MONITORING

SHERATON DALLAS HOTEL & TOWERS
DALLAS, TEXAS
OCTOBER 16-18, 1985

PUBLISHED: MARCH 1986

Prepared by the
Oak Ridge National Laboratory
Oak Ridge, Tennessee 37831
operated by
Martin Marietta Energy Systems, Inc.
for the
U.S. DEPARTMENT OF ENERGY
under Contract No. DE-AC05-840R21400

Printed in the United States of America. Available from
National Technical Information Service
U.S. Department of Commerce
5285 Port Royal Road, Springfield, Virginia 22161
NTIS price codes—Printed Copy: A14 Microfiche A01

This report was prepared as an account of work sponsored by an agency of the United States Government. Neither the United States Government nor any agency thereof, nor any of their employees, makes any warranty, express or implied, or assumes any legal liability or responsibility for the accuracy, completeness, or usefulness of any information, apparatus, product, or process disclosed, or represents that its use would not infringe privately owned rights. Reference herein to any specific commercial product, process, or service by trade name, trademark, manufacturer, or otherwise, does not necessarily constitute or imply its endorsement, recommendation, or favoring by the United States Government or any agency thereof. The views and opinions of authors expressed herein do not necessarily state or reflect those of the United States Government or any agency thereof.

CONTENTS

Page

Foreword v

Executive Summary vii

Session I. Planning and Design of Monitoring Projects

Planning and Design of Field Data Acquisition and Analysis Projects: A Case Study
Patrick D. Hughes and *Wayne E. Clark* 3

An Overview of the Guiding Principles Concerning Design of Experiments, Instrumentation, and Measuring Techniques
Mats D. Lyberg and *Gian V. Fracastoro* 21

Design of a Large-Scale Metering Project
Richard P. Mazzucchi 33

Session II. Instrumentation and Sensor Interfacing

Measurement of Temperature, Humidity, and Fluid Flow
C. Warren Hurley 43

Instrumentation for Monitoring Buildings in Hot, Humid Climates
Charles J. Cromer 59

Alternate Methods to Acquire Energy Usage and Occupance Data
Ken J. Gadsby, David T. Harrje, and *Richard A. Grot* 67

Instrumentation for Evaluating Integrated Lighting System Performance in a Large Daylighted Office Building
Mashuri Warren, C. Benton, Rudy Verderber, Oliver Morse, Steve Selkowitz, and *J. Jewell* 71

Session III. Data Acquisition System Hardware

A Modular Microcomputer-Based Data Acquisition System for Monitoring Energy Consumption in Buildings
Jeff Haberl, Tom Volckhausen, and *David Claridge* 83

Remote Data Acquisition System for Building Energy Data
Eileen Westervelt and *Larry Windingland* 97

Field Data Acquisition Hardware
George J. Schuster 103

The Energy Signature Monitor (ESM) — Lessons Learned
Richard F. Szydlowski 111

Applications of Microcomputers in Data Collection
William P. Levins 119

Session IV. Data Processing and Analysis

An Experiment with a Remote Data Sharing Network
Charless W. Fowlkes and *Fredrick M. Cady* 127

Remote Data Acquisition Systems Using Portable Personal Computers
Charless W. Fowlkes 133

Principles of Data Processing and Analysis
Thomas E. Brisbane 141

Information Processing of Energy Consumption Data
Larry Augustine, William Taylor, and *Larry Windingland* 147

Occupant Effects and Normalization of Field Monitoring Results
Donald J. Frey 151

Real-Time Sensor and System Fault Detection Using Analytical and Statistical Techniques
Thomas A. King, William J. Shadis, and *Michael T. Panich* 157

Session V. Field Experiences

Residential Demand Controller Field Test
Richard L. Aicher and *James A. Butt* 167

Data Acquisition and Testing at the Tennessee Energy Conservation in Housing (TECH) Complex
Van D. Baxter 173

Measurement of Heating Equipment Performance Improvements
Ulrich Bonne 181

Field Testing of Electric Heat Pumps and Gas Furnaces
Darrell Brewster 195

Obtaining Building Energy Data — Problems and Solutions
David T. Harrje 205

Measurement of Coincident Peak Electric Demand
Paul F. Swenson 213

Data Acquisition and Analysis in Multi-Family Dwellings
Thomas S. Zawacki and *Robert A. Macriss* 237

Mini-Workshop Summaries

A. Building Envelopes 246
B. Building Equipment 247
C. Multi-Building Metering 249

Mini-Workshop Abstracts

A. Building Envelopes 253
B. Building Equipment 265
C. Multi-Building Metering 285

Author Index 293
Author Affiliations 295
Workshop Attendees 299

FOREWORD

The Field Data Acquisition for Building And Equipment Energy-Use Monitoring Workshop was held October 16–18, 1985, at the Sheraton Dallas Hotel & Towers in Dallas, Texas. The purpose of the workshop was to exchange information and experiences; to review current data acquisition hardware and software; and to formulate a set of major data acquisition and reduction methodology issues, along with alternatives for their resolution. The workshop was oriented towards planners, designers, operators, and users of monitoring equipment in residential, commercial, and institutional buildings. Professionals (106) representing 71 organizations consisting of gas and electric utilities, independent R&D organizations, national laboratories, consulting companies, federal government agencies, universities, manufacturers, and state agencies were in attendance.

The 25 invited papers in the proceedings are assembled by sessions as they were presented at the workshop. The formal sessions focused on five major areas: Planning and Design of Monitoring Projects, Instrumentation and Sensor Interfacing, Data Acquisition System Hardware, Data Processing and Analysis, and Field Experiences. These subject areas were the topics of the first day and a half. The remaining portion of the meeting was devoted to three simultaneous mini-workshops. Detailed informal discussions were held on Building Envelopes, Building Equipment, and Multi-Building Metering. Abstracts and summaries for each mini-workshop are included in the proceedings. The workshop concluded with a Plenary Session, in which the results and conclusions from each mini-workshop were presented.

A Table of Contents, Author Index, Author Affiliation, and a list of Workshop Attendees are provided to assist the reader. An attempt was made to assemble a central bibliography; however, not enough entries were submitted to justify this. The references listed at the end of papers are excellent beginnings for a bibliography.

On behalf of DOE and ORNL, I gratefully acknowledge the efforts of the Organizing Committee, Session Chairmen, mini-workshop leaders, and speakers. I also wish to express my appreciation to all participants.

Editor

Kay H. Zimmerman
Oak Ridge National Laboratory

EXECUTIVE SUMMARY

This workshop provided ample evidence that energy-use monitoring is growing rapidly. This growth is accentuated by the need for more accurate data on building performance for both energy use and energy demand. Growth is also attributed to the realization that the state of the art of modeling is not yet adequate for predicting dynamic performance when, for example, building occupancy, function, and construction variability are to be accounted for.

The single, most recurrent theme in the workshop was the need for good preliminary planning before committing to any specific monitoring program. The most concise summary of this issue was provided in the paper by R. A. Grot. He lists some of the major problems associated with the selection and use of a data acquisition system:

1. Planning for projects tends to be hardware oriented.
2. Little thought is given to data analysis and processing.
3. No priority scheme established.
4. Lack of redundancy in data collection.
5. Little error analysis from a system viewpoint.
6. Frequent modifications to data systems by advisory panels.
7. Useful information gathered but not used for project objectives.
8. Little or no system documentation.

According to Grot, resolution of these problems will require that:

1. Data analysis should be done before hardware design.
2. Critical parameters should be identified and given priority.
3. Interdependency of parameters should be identified.
4. Online processing and read-out should be in simple terms.
5. Data must be analyzed and processed regularly.
6. Data scheme should be simple and to the point.
7. State-of-the-art methods should be avoided.
8. Reliability should be emphasized over accuracy.
9. More emphasis should be put on software needs and requirements.
10. Documentation should be completed before data gathering commences.

It was also evident from the workshop that there is a noticeable evolution occurring in the way that monitoring experiments are being conducted. At the root of this evolution is the personal computer. Programs as recent as 3 years ago involved multicomponent rack-mounted equipment, whereas many of the functions of data acquisition, processing, and analysis are now being folded into very small packages. Hardware reliability and compatibility were mentioned as primary concerns, whereas software availability was not often mentioned.

Standards, standardized procedures, protocols, and other means of introducing regularity (and reliability) into monitoring were discussed, but no consensus appeared. Generally, participants believed that more experience with monitoring techniques and better communication among professionals are needed before attention is directed toward specific practices.

Workshop Co-Chairmen

George E. Courville
Phillip D. Fairchild
Oak Ridge National Laboratory

Session I

PLANNING AND DESIGN OF MONITORING PROJECTS

Planning and Design of Field Data Acquisition and Analysis Projects: A Case Study

Patrick D. Hughes
Engineering Analysis & Computer Services

Wayne E. Clark
End Utilization Technology

W. S. Fleming and Associates, Inc.
Syracuse, New York

ABSTRACT

Based on the experiences from over 40 residential and commercial sites, a methodology has been developed for the planning and design of field data acquisition and analysis projects. This paper describes the planning and design process, and illustrates how it was used for a nine-site field test of residential earth-coupled heat pumps from 1982-85.

The planning and design process can be summarized as follows. One starts with the project objectives and determines the key deliverables. Issues which the key deliverables must address are listed. The information which the data must produce in order to resolve all issues is defined, often right down to how it is to be formatted and displayed. Data points are postulated which, when acquired and analyzed with appropriate algorithms, fulfill the data analysis and display requirements. Several iterations may be required until a data point is set is established which can be obtained given the constraints of project budget and available hardware and software systems. A Data Acquisition and Analysis (DAA) Plan documents the results of the planning process, and specifies all derivative information required by the project team to implement the project.

By presenting a case study, the paper carries the discussion beyond the conceptual level. It is seen that the available hardware and software systems are the key elements in determining the amount of useful results obtained at reasonable cost. It is also seen that a diverse staff is required to efficiently implement field data acquisition and analysis projects. The hardware and software systems and project staffing are described in terms of data reliability and overall project cost effectiveness.

The case study approach also helps illustrate the importance of project structure in obtaining reliable data. In addition to the DAA Plan, management controls such as establishing conditions to be met prior to the official start of data collection, and clear definitions of roles (or responsibilities) of all parties (e.g., building owners, manufacturers, etc.) are essential.

1.0 INTRODUCTION

A planning and design process for data acquisition and analysis projects is presented which has been developed based on the experience of over 40 residential and commercial sites. The process can only be explained in terms of the organization, specialized staff requirements, process technology, and standard project structure utilized for such projects. Therefore, brief descriptions of these are provided.

After describing the planning and design process, a case study is presented to elevate the discussion beyond the conceptual level. Subsequent to the case study, the authors highlight what they consider to be the key elements in the planning and design of data acquisition and analysis projects.

2.0 ORGANIZATION AND METHODS

2.1 Organization

Data acquisition and analysis projects require a diverse staff of specialized individuals ranging from licensed tradesmen, to licensed Professional Engineers, to engineers and computer scientists with advanced degrees. The organization (Figure 1) is designed to provide efficient coordination and communication between the many different disciplines, while maintaining appropriate separation to encourage professional advancement and profitable operation within each discipline.

The building blocks of the organization are the technical functions. Technical functions are defined as significant identifiable roles which, due to the frequency of their need on projects, are broken out separately in the organization to provide the role as a service to all projects requiring it. As they strive to meet project quality, budget and schedule commitments, Project Managers tap only the resources of the technical functions needed on the particular project. Technical Function Managers have the responsibility to

provide a high level interface to Project Managers who require the services of themselves or their staff.

Related technical functions are grouped under Coordinators who assist in the smooth and efficient allocation of resources to projects. Each Coordinator has two major areas of responsibility: (1) to facilitate task assignments to technical functions during project initiation, and (2) to coordinate the resources required in an efficient, effective, and timely manner during project implementation.

After project initiation, the major communication channels are directly between project team members. Project Managers perform their own follow-up directly with Function Managers in order to meet project requirements.

2.2 Specialized Staff

Each technical function represents one or more areas of staff specialization as follows:

Systems Management and User Support	- Computer Systems Manager
Data Systems Setup and Operation	- Data Manager
Data Analysis	- Engineer Analyst (Various Disciplines)
Modeling and Analysis	- Engineer Analyst (Various Disciplines)
Mechanical and Piping Design	- Professional Engineer (Mechanical) - Estimators, Draftsmen, etc.
Electrical Design	- Professional Engineer (Electrical) - Estimators, Draftsmen, etc.
Instrumentation Services	- Instrumentation Specialist
Coordination of Trades	- General Contractor Dispatcher Tradesmen Field HVAC Technicians

Personnel in each discipline tend to have similar educational backgrounds, experiences, professional goals, and recreational activities. The existence of many different types of people results in the need to allow several "cultures" to co-exist. A degree of organizational separation is maintained to allow each group to thrive and maintain their competitive edge over peers offering similar services in the marketplace. Project Managers may originate from any technical function but must have a healthy respect for the diversity of talent around them, and must be able to deal effectively with many different types of people both in and outside of the organization.

2.3 Process Technology

As is true in the manufacturing business, in the data acquisition and analysis services business, there is a clear distinction between product and process technology. Products might be the final report, an engineering specification for design/build implementation, or technology transfer materials such as video tapes, slide seminars and scripts, booklets, technical notes, technical papers, or satellite teleconferences. The process technologies are the tools used to generate the products. In the data acquisition and analysis services business, the computer hardware and software systems utilized dictate, to a large extent, the productivity and service levels which are economically achievable.

The computer hardware system utilized (Figure 2) consists of a central facility with dial-up telephone data communications capability to remote monitoring sites, and from remote offices. The data acquisition equipment at the remote sites have compatible and reliable communications capability with the central facility using standard voice grade telephone lines. The dial-in capability from remote offices must originate from a compatible terminal, or terminal emulator.

The computer software system utilized (Figure 3) was designed to provide maximum automation and data reliability. The central facility automatically dials remote monitoring sites daily, and retrieves, verifies, and loads data into site databases. Regular interval data reports are scheduled and generated through batch processing. Site databases can be made accessible in a high level, menu-driven, English interface form where important engineering and technical results can be viewed graphically or in tables for selected data sets which can be custom-defined in sophisticated ways. In addition, local staff at the central facility can implement any custom analyses which may be required.

These hardware and software systems combine to provide a highly automated environment which allows a single data manager to be responsible for detecting problems and initiating corrective actions for a large number of remote sites. Since the data is handled daily, next day corrections of "test system" or sensor problems can be made. Site data retrieval rates of 95 percent are routinely achieved.

Similar central facility hardware/software systems could be successfully developed in any number of computer vendor environments. Likewise, any number of remote site data acquisition units could be, and have been, successfully utilized. The productivity and reliability of the overall system has less to do with the specific computer hardware and software, than it has to do with proper

organization, staffing, and management for rapid problem detection and resolution.

2.4 Standard Project Structure

Experience with many different types of data acquisition and analysis projects has allowed the established of a standard project structure and tasks (Figure 4) which, with minor modifications, facilitates superior performance on quality, time, and budget on all project applications. Aside from the standard tasks, the key elements of the structure are: (1) the Data Acquisition and Analysis (DAA) Plan, (2) clear definition of the responsibilities of all parties (sponsors, contractors, manufacturers, dealers, building owners, etc,) (3) an official start of data collection after all hardware/software systems are installed, de-bugged, and verified from sensors to automated data reports, (4) daily data handling for problem detection and resolution, and (5) access to high-level analyzed data at regular intervals (automated monthly data reports) or on demand (by staff at the central facility or on a dial-in basis).

The DAA Plan documents the planning and design process which can be summarized as follows. One starts with the project objectives and determines the key deliverables. Issues which the key deliverables must address are listed. The resultant analysis output which the data must produce in order to resolve all issues is defined, often right down to how it is to be formatted and displayed. Data points are postulated which, when acquired and analyzed with appropriate algorithms, fulfill the data analysis and display requirements. Several iterations may be required until a data point set is established which can be obtained given the constraints of the project budget and available hardware and software systems. Usually, site visits or design services are required to determine: (1) exactly how the system to be monitored is installed and controlled, and (2) exactly where and how instrumentation must be interfaced with the monitored system.

The DAA Plan documents the results of the planning process in such a way that all derivative information required by the project team to implement the project is generated. The matrix organizational structure allows Project Managers to direct closely coordinated short duration efforts by a team of specialists, both in the field and on the computer, to bring sites "on-line" quickly. The entire "data track" from sensors to automated data reports and dial-in data access is de-bugged prior to the official start of data collection. The shake-down effort includes operating the monitored system in all of its various modes of operation, to verify proper operation of the monitored system and instrumentation under all possible conditions.

The data collection phase of the project is highly automated. Data is retrieved, verified and stored in the central computer facility with a minimum of human intervention on a daily basis. Problem detection occurs the same day or next day, with quick resolution thereafter. Data reports are generated automatically at regular intervals, usually monthly. When dial-in access is selected as part of the service package, access can be made to any data residing in the site databases at the central facility (i.e. up to the previous day). The staff at the central facility also have up to the previous day data access, using all of the analytical software tools available to the system for custom or "canned" analysis.

Often data is collected for a period of 12 months to obtain seasonal performance. Typical deliverables might include a Heating Season Interim Report, a Cooling Season Interim Report, and a comprehensive Final Report. A typical project might also require one or more of the following technology transfer deliverables: (1) engineering specifications in CSI format, (2) video tapes, (3) slide seminars and scripts, (4) booklets or brochures or technical notes directed at specific audiences, and (5) journal articles, techical papers and presentations, or trade magazine articles.

3.0 CASE STUDY: RESIDENTIAL EARTH-COUPLED HEAT PUMP DEMONSTRATION

A case study highlighting the application of the previously described planning and design process is presented to elevate the discussion beyond the conceptual level. The particular project utilized is the Residential Earth-Coupled Heat Pump Demonstration [1,2,3,4].

At the time the project was initiated in 1982, many issues concerning earth loop technology and the overall cost competitiveness of earth-coupled heat pump (ECHP) systems were as yet unresolved. The resulting uncertainty was retarding the commercialization of this technology, despite significant potential benefits to both customers and utilities in suburban and rural areas where utility facilities (wheather of the distribution, transmission or generation level) are winter peaking.

A brief review of residential ECHP technology is provided here to facilitate the understanding of subsequent sections. Earth-coupled heat pumps are water source heat pumps in which the "water" is an antifreeze or brine solution recirculated in pipes buried in the ground (Figure 5). The pipes, or earth loops, act as heat exchangers between the fluid and the earth. Earth loop technology has the potential of making water source heat pumps generally applicable to residences without regard to surface or groundwater supplies. Earth-coupled heat pumps usually offer lower operating costs and reduced electrical demand when compared to other all-electric heating technologies, hence the potential for customer and utility benefits.

The visible portions of an ECHP system (Figure 6) are quite conventional looking. Indeed, from the homeowner point of view, the system actually appears simpler than conventional air source heat pump or central air conditioning systems because no outdoor fan/compressor unit is required. The benefits of the system derive from the more stable source temperature provided by the earth (Figure 7). The stable source temperatures also allow heat pumps to be designed to provide heating, cooling, and domestic hot water on demand all year long.

In the following section, the planning and design process for the case study project is reviewed. Then, in the subsequent section, project implementation is discussed with particular emphasis on aspects of implementation made possible by the planning and design process.

3.1 Planning and Design

Objectives

In this section, the steps of the planning and design process are reviewed for the case study project. The objectives are reviewed, the key deliverables are defined, the issues to be addressed in the deliverables are listed and the information or actions required to resolve the issues are determined. Then the experimental design of the installations which is most appropriate is reviewed. Finally, the required data processing is specified.

The project objectives were to:

1. Install and field monitor the industry state-of-the-art in residential ECHP technology.

2. Determine customer and utility benefits which may derive from residential ECHP technology.

3. Determine the technical and market potential of residential ECHP systems in upstate New York.

Key Deliverables

The following were established as key deliverables:

1. Nine ECHP systems installed in actual homes and operable during the test period and indefinitely thereafter.

2. Operational data over a two-year period to be reported in:
   - monthly data reports,
   - interim heating season reports, and
   - interim cooling season reports.

3. A comprehensive final report.

Issues Which Deliverables Must Address

It was determined that in order to satisfy the project objectives, the key deliverables had to address the following issues:

- Technical Issues

T(1) The ability of the earth loop to fully recover from season to season and year to year.

T(2) The importance of moisture migration away from the pipe when heat is rejected to the ground.

T(3) Earth loop configuration and size.

T(4) Source/sink temperature extremes and their effect on heat pump performance.

T(5) The feasibility of direct passive cooling.

T(6) The ability to integrate domestic hot water heating.

T(7) The value of automatic switching controls on the earth loop.

- Practical Issues

P(1) The cost to install earth loops in the soil conditions of upstate New York.

P(2) The seriousness of various constraints in the retrofit/replacement markets such as:
   - existing duct sizes,
   - existing electrical service entrance sizes,
   - property size, and
   - lawn restoration cost.

- Benefit Issues

B(1) Winter peak day electrical demand.

B(2) Seasonal and annual heating, cooling, and domestic water heating electrical consumption, and performance factors.

B(3) Reliability.

Information or Actions Required to Address Issues

The key data items required to resolve each issue of the previous section are identified. Key actions required, such as installations, are also indentified.

Issue	Information or Action Needed
T(1)	- Entering liquid temperature (from the earth loop) trend plots over a multi-year period.
T(2)	- Entering liquid temperature (from the earth loop) trend plots over the cooling season.
T(3)	- Several earth loop configurations installed.

- Entering liquid temperature (from the earth loop).
- Different earth loop configurations driven with the same temperature, flow and cyclic conditions simultaneously at the same site.

T(4) - Entering liquid temperature (from the earth loop), leaving temperature, and heat pump kWh consumption.

T(5) - Direct passive cooling installed with horizontal and vertical earth loops.

T(6) - Intallations of the various proposed methods of providing hot water from earth-coupled heat pump systems.

T(7) - An installation of a system using controlled switching of earth loops in order to maintain entering liquid temperatures as near as possible to far field temperatures.

P(1) - Earth loop installations across upstate New York.

P(2) - Site surveys of many existing homes during the site selection process, and the actual selection of existing homes which require duct upgrades, electric service upgrades, and lawn restoration.

B(1) - 15 minute sliding window electrical peak demand on the overall heating, cooling, water heating system.

B(2) - An ability to separate heating, cooling, and water heating electrical consumption and energy delivery on an hourly basis.

B(3) - Maintenance records over a multi-year period.

Experimental Design of Installations

The installation requirements identified in the previous section resulted in an experimental design of the ECHP installations which met all of the identified needs. The earth loop configurations installed are presented in Figure 8. They were distributed across upstate New York as illustrated in Figure 9 in order to encounter a broad sampling of upstate New York soil conditions.

The generic heat pump types installed are illustrated in Figure 10. It was decided to monitor the heat pumps for a year without domestic water heating. This allowed determination of the preferred units based on heating and cooling. The preferred heat pump turned out to be the packaged liquid-to-air unit. Site conversions were made so that the domestic water heating approaches of (Figure 11) could all be tested with packaged units in the second year, so that preferred heating/cooling/water heating units could be determined.

Specify Data Analysis Displays

Data displays and formats were selected based on the information requirements previously identified and on a desire to view engineering performance of the various components in ways which are common to the industry and of value for analysis and data verification. The formats vary somewhat depending on which data report they are a part of:

- Monthly and seasonal data reports:
  - Load line scatter plot (Figure 12).
  - Capacity vs. source temperature scatter plot (Figure 13).
  - COP vs. source temperature scatter plot (Figure 14).
  - Operational Summary (Figure 15).
- Seasonal data reports only:
  - Ambient vs. Source Temperature histogram (Figure 16).
  - Daily average source, return, and ambient temperature trends (Figure 17).
  - Peak day electric demand profiles (Figure 18).

Specify Data Acquisition and Analysis Algorithms

Data acquisition algorithms control the signal processing downstream of the sensor interfaces at the remote sites. Any screening, totalizing, or averaging that must occur at less than hourly intervals is performed there. Analysis algorithms are implemented at the central computer facility to manipulate the hourly data into the defined displays.

In terms of order of specification, the analysis algorithms are specified first since they are driven by the required data displays. The data acquisition algorithms, in turn, are driven by the input requirements of the analysis algorithms (i.e. the data string which the remote site must generate). The data acquisition algorithms drive the definition of the actual pulse, analog, and status sensors required. Accuracy considerations influence sensor scan rates.

Specify Automated Data Points, Analysis Constants, and Backup Data Points

Final specification of what data is to be taken is usually a trade-off between budget, number of data points, and accuracy. The actual data taken falls into three categories: (1) automated data, (2) analysis constants, and (3) backup data. Automated data refers to the hourly data generated from the sensors (Table

1(a)). The analysis constants are conversion factors or items which can be measured periodically at the site and assumed constant (Table 1(b)). The backup data are derived from electro-mechanical devices with dials or digital displays which operate independently of the automated data acquisition system (Table 1(c)).

The compromise worked out for a typical packaged liquid-to-air unit site with no water heating is summarized in Table 1, where all three types of data taken are summarized.

Specify Verification Procedures

The automated data strings retrieved from the remote sites are verified at the central facility before being loaded into the databases. Two levels of verification are performed: 1) range checks, and 2) relational checks. Range checks require the specification of upper and lower limits for each item in the data string. Relational checks use custom engineering analysis to derive conditions or performance factors and compare them to expected values given the particular mode of operation. Typical verification specifications for the automated datapoint list of Table 1 are presented in Table 2.

3.2 Implementation

The planning and design process described in the previous section corresponds with Task 1 of the standard project structure (Figure 4). The following paragraphs highlight the impact of the planning and design process on subsequent tasks of the case study project.

Task 2 - Design Services

Documenting the experimental design of the ECHP installations allowed engineering specifications for the installation of earth loops and indoor equipment to be developed for all sites in a coordinated and cost-efficient manner.

Task 3 - Program/Install/Maintain/Remove DAS

Documenting the sensor and automated data point lists allowed the sensors and data acquisition systems (DAS) for the remote sites to be specified, procured, programmed, bench tested, and installed at all sites in a coordinated and cost-effective manner.

Task 4 - Data Systems Implementation

Documenting the automated datapoint lists, verification methods, and data report formats allowed the verifier, database loader, database, and report generation software to be implemented on the central computer for all sites in a coordinated and cost-effective manner.

Task 5 - Data Systems Operation

Reliable data collection with a minimum of human intervention is a direct result of the planning and design process.

Task 6 - Data Analysis

The planning and design process minimizes the amount of custom data analysis required for the interim and final reports.

Task 7 - Reporting

The planning and design process forces the drafting and client approval of the automated monthly data report formats prior to implementation so that once automated, they provide the major method of satisfying the client's need to know how the systems under test are performing. This minimizes the amount of expensive custom data analysis by staff engineers.

Task 8 - Administrative Management

The DAA Plan is the Project Manager's primary tool for maintaining technical control of the project, and hence to insure that the project objectives are met at expected levels of quality, on time, and within budget.

4.0 SUMMARY

The following paragraphs highlight what the authors consider to be the key elements in the planning and design of data acquisition and analysis projects.

4.1 The Organization

A matrix organization is highly suitable because it provides a means for supporting highly specialized staff expertise, while at the same time giving Project Managers enough authority to perform high quality, work, on time, and within budget. The organization is also highly conducive to the simulataneous execution of many projects.

4.2 Specialized Staff

The planning and design process described herein provides the Project Manager with the tools required to manage work done through several technical functions simultaneously.

4.3 The Process Technology

The computer hardware/software systems in place determine the level of automation and productivity which is achievable. The planning and design process described herein is compatible with highly automated and cost effective approaches.

4.4 The Project Structure

Planning and design alone cannot guarantee a successful project. The project must be structured to take advantage of the planning performed, but to compensate for the schedule impact of planning with a flurry of simultaneous activity both in the field and on the computer thereafter. The entire data track from sensor to report output must be verified prior to the official start of data collection.

4.5 Planning and Design

The product of the planning and design process is the Data Acqusition and Analysis (DAA) Plan. The DAA Plan serves as the major management control as the project manager strives to meet contractual requirements for quality, time, and budget.

REFERENCES

1. Residential Earth-Coupled Heat Pump Demonstration: Phase 1 and 2 Final Report, P.J. Hughes, Niagara Mohawk Power Corporation, New York State Energy Research and Development Authority, Rochester Gas and Electric Corporation, (May 1985).

2. "Results of the Residential Earth-Coupled Heat Pump Demonstration in Upstate New York", P.J. Hughes, et.al., ASHRAE Transactions, v.91, Pt.2, (1985).

3. "The New York State (USA) Demonstration of Residential Earth-Coupled Heat Pumps: Synopsis of Monitored Performance", P.J. Hughes and R. Hackner, Proceedings of Second International Energy Agency (IEA) Commission of the European Communities (CEC) Workshop on Solar Assisted Heat Pump Systems, Vienna, Austria, (May 8-10, 1985).

4. "Residential Earth-Coupled Heat Pumps: Detailed Monitoring, Evaluation, and Cost Effective Design", P.J. Hughes and W.S. Fleming, Proceedings of CLIMA 2000 World Congress on Heating, Ventilating, and Air Conditioning, Copenhagen, Denmark, (August 25-30, 1985).

5. "A Technical Guide to Ground-Source Heat Pumps", New York State Energy Research and Development Authority, Empire State Electric Energy Research Corporation, (September 1985).

6. Niagara Mohawk R&D Tech Notes - R&D project #SS145: Residential Earth-Coupled Heat Pump Demonstration, Niagara Mohawk Power Corporation, (September 1985).

ACKNOWLEDGMENTS

The authors wish to express their gratitude to the Niagara Mohawk Power Corporation Research and Development Department for their foresight in the establishment of an active program for the field evaluation of energy conserving end utilization technologies. In particular the project support of Mr. Richard A. O'Neil, P.E., manager of the R&D Department's Energy Conservation Research Program, enable the gradual improvement of the organization, staff, facilities, and planning and design methods described herein with each subsequent project. The authors also wish to thank their respective staffs who devoted many hours of their own time to the development of methods to obtain reliable field monitored data in a cost effective manner.

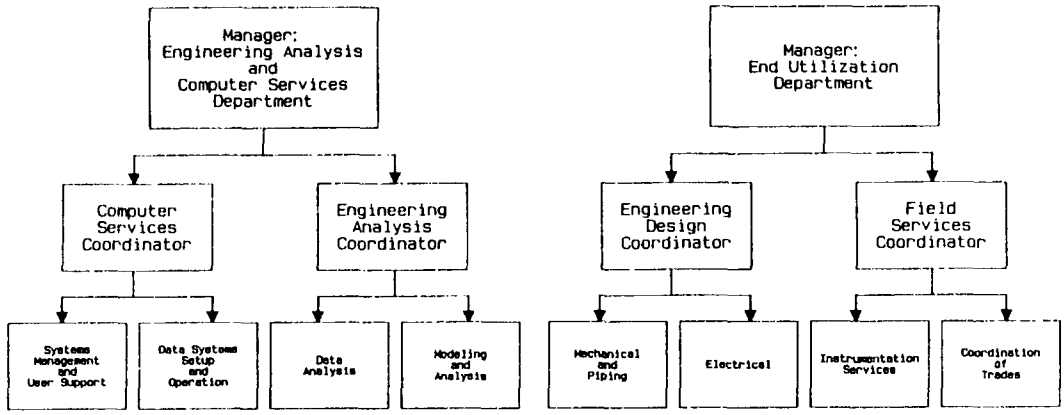

Figure 1. Organization Chart

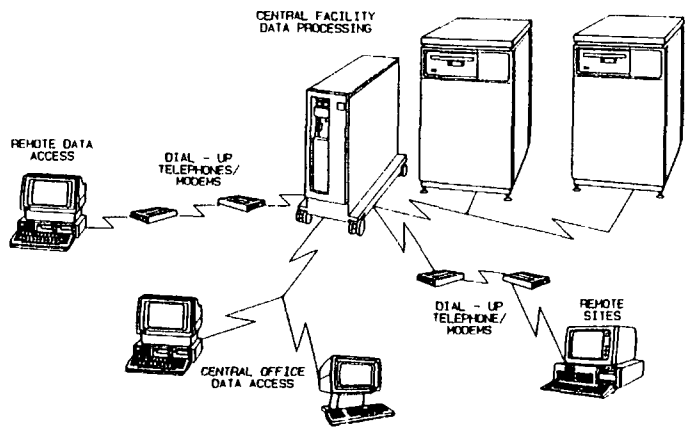

Figure 2. Computer Hardware Systems Utilized

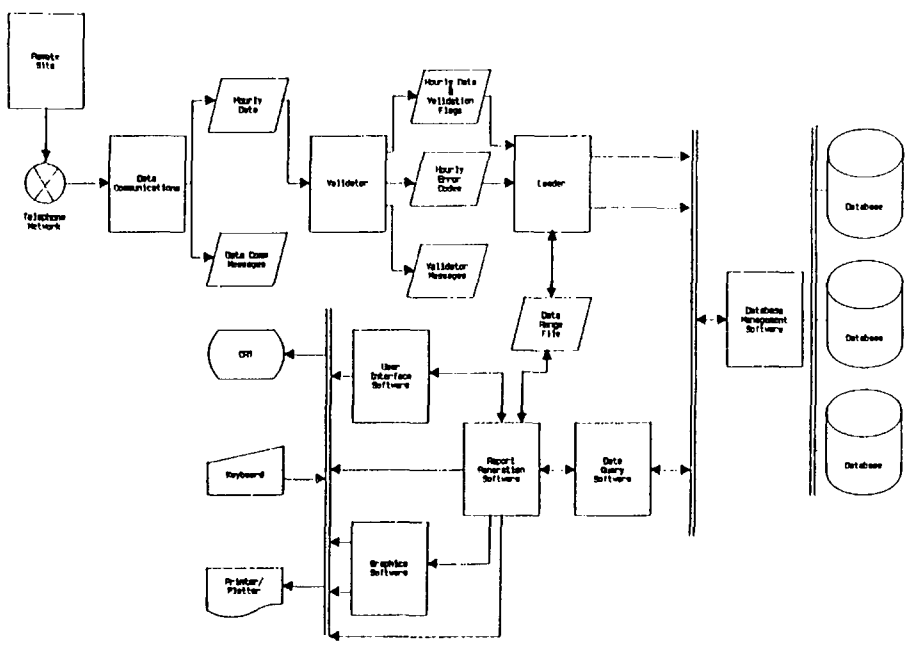

Figure 3. Central Facilities Software Systems

Figure 4 Standard Project Structure

```
                                          Months From Start
                                          1  2  3  4  5  6  7  8  9  10 11 12 13 14 15 16
1.  Data Acquisition                      ----
2.  Design Services                        ----
3.  Program/Install/Maintain/Remove DAS    ------------------------------------------
4.  Data Systems Implementation            ---
5.  Data Systems Operation                    ------------------------------------------
6.  Data Analysis                          ---                 ---             -------
7.  Reporting                                     .  .  .  .  .  .  x.  .  .  .  .  x. Ø
8.  Administrative Management              ------------------------------------------------
```

Reporting Key: • - Monthly Data Report
x - Interim Heating or Cooling Season Report
Ø - Final Report

Figure 5 Typical Earth-Coupled Heat Pump System

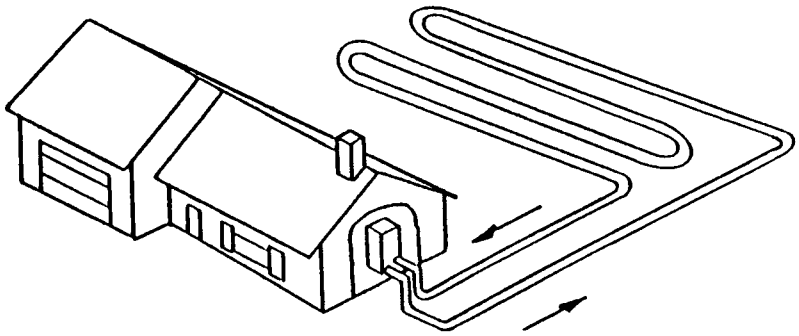

Figure 6 Typical Indoor Installation

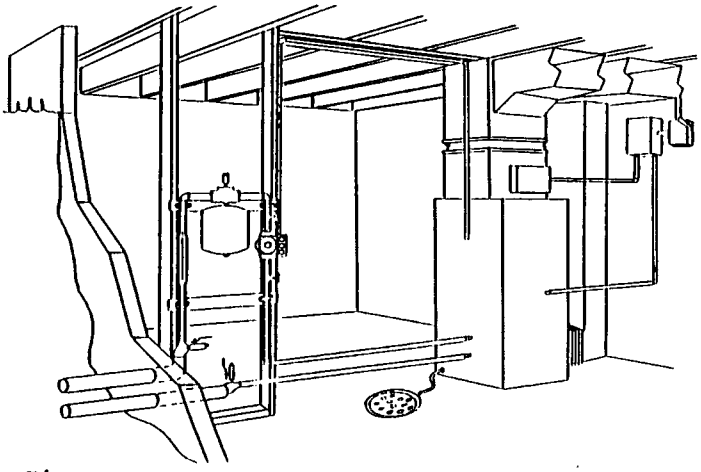

Figure 7 Monthly Average Energy Source Temperature

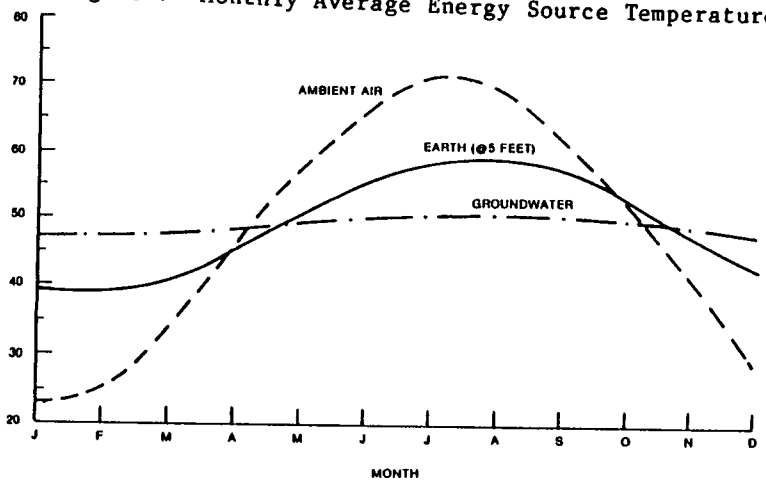

Figure 8 Earth Loop Configurations Installed

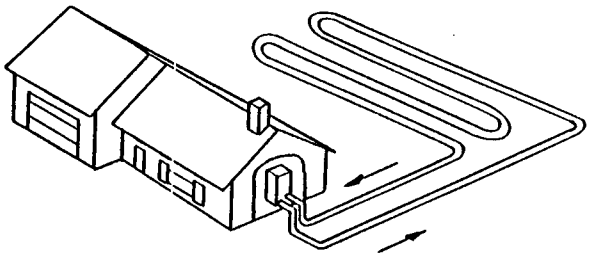

a) Horizontal Series (1 Pipe). Sites #1, #2, and #5.

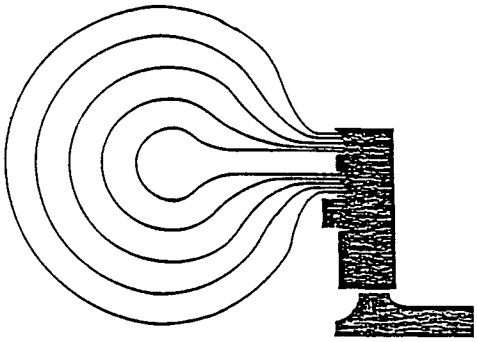

b) Horizontal Parallel (2 pipe), Automated Switching. Site #6.

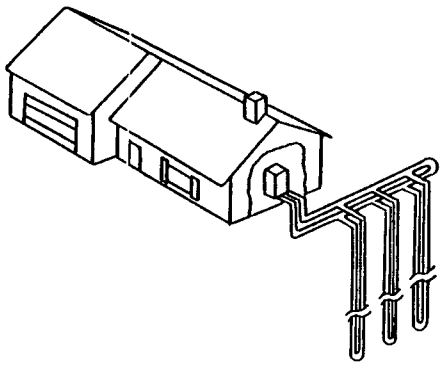

c) Vertical Parallel. Sites #3 and #4.

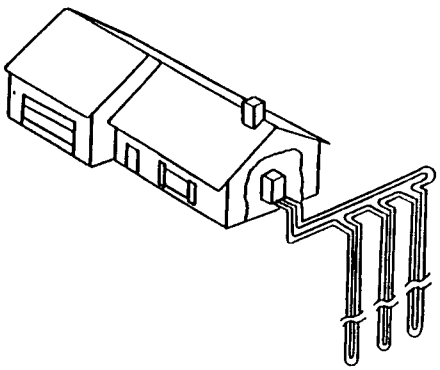

d) Vertical Series. Site #7.

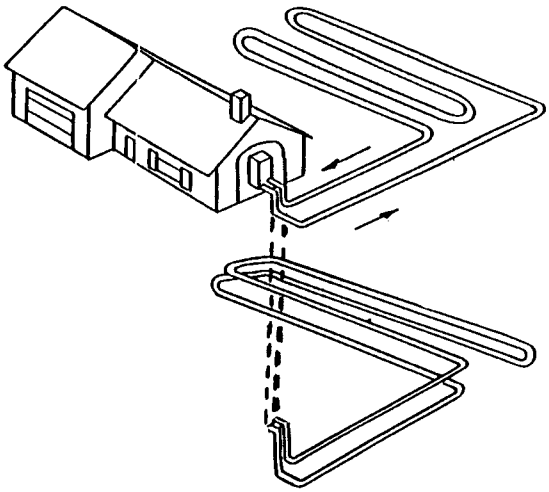

e) Horizontal Series (1 and 2 Pipe). Site #8.

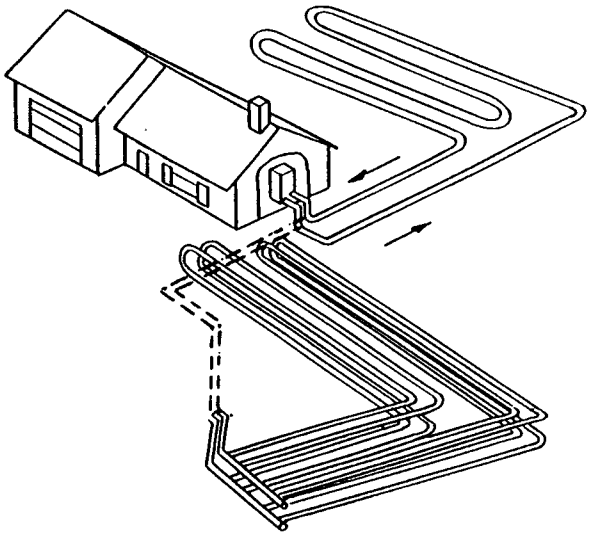

f) Horizontal Series (1 Pipe) and Horizontal Parallel (4 pipe). Site #9

Figure 9. Location of the Demonstration Sites Within New York State

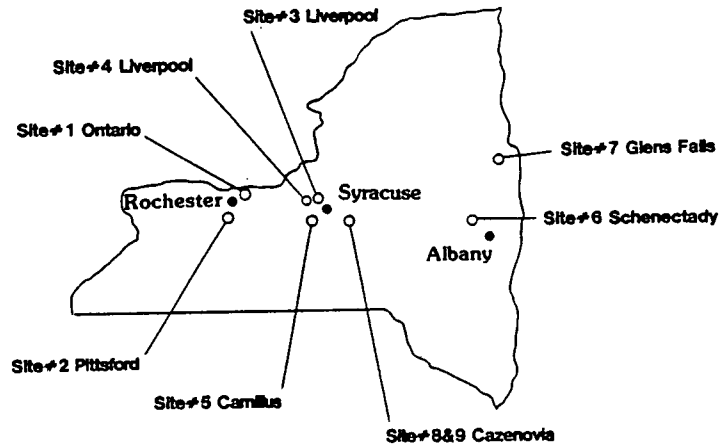

Figure 10 Generic Heat Pump Types Tested

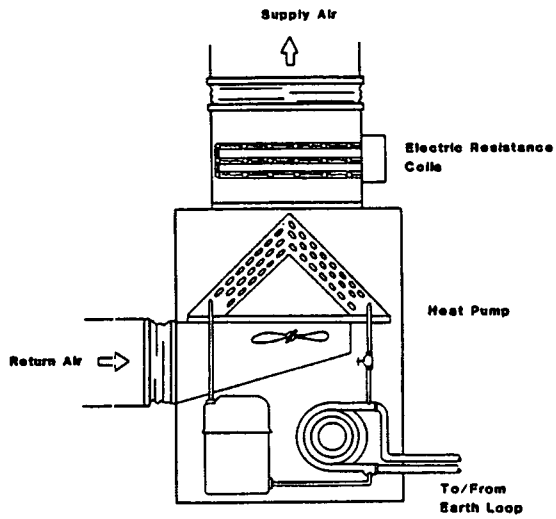

a) Packaged Liquid-to-Air Heat Pump

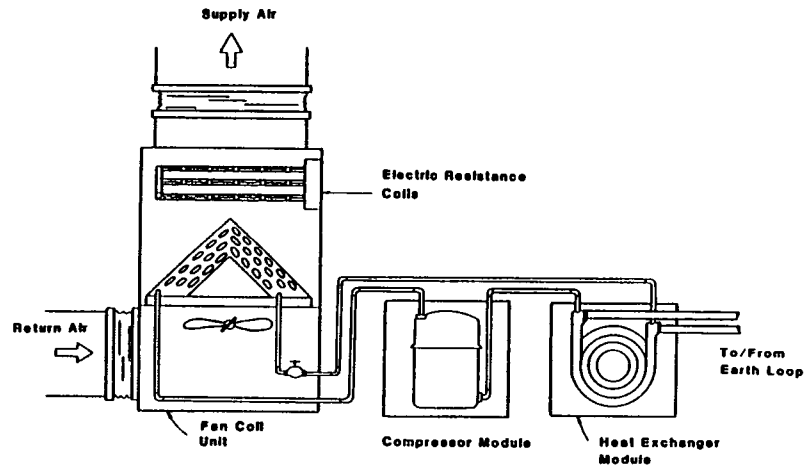

b) 3-Component Liquid-to-Air Heat Pump

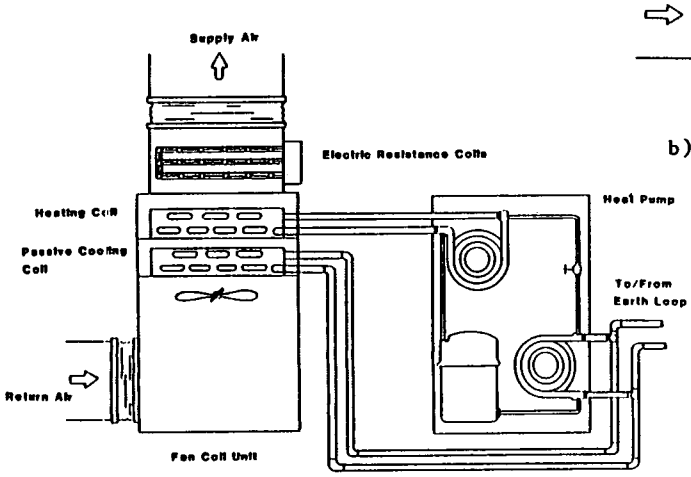

c) Packaged Liquid-to-Liquid Heat Pump

Figure 11 Generic Domestic Water Heating Approaches Tested

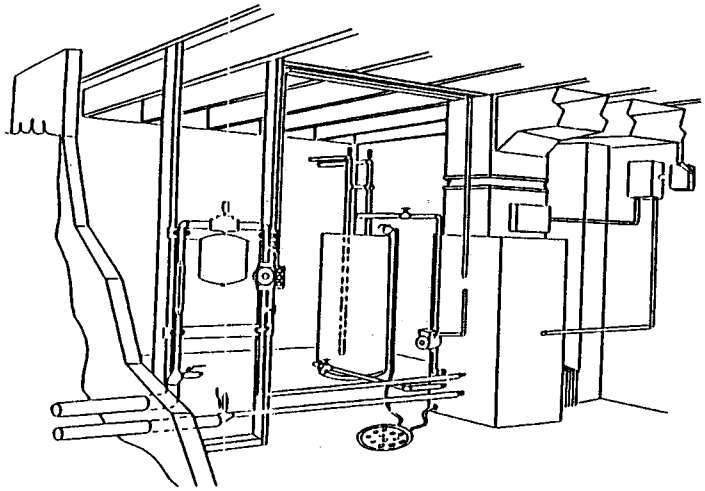

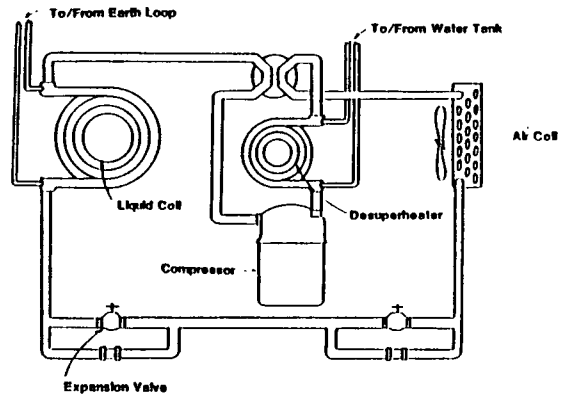

a) Parasitic Desuperheater

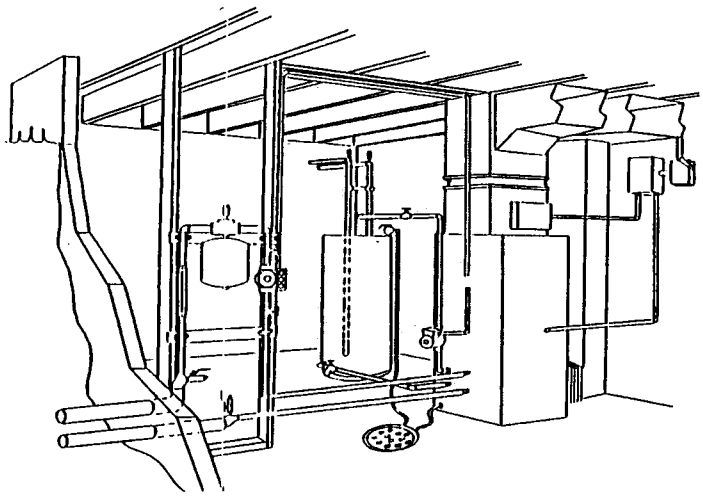

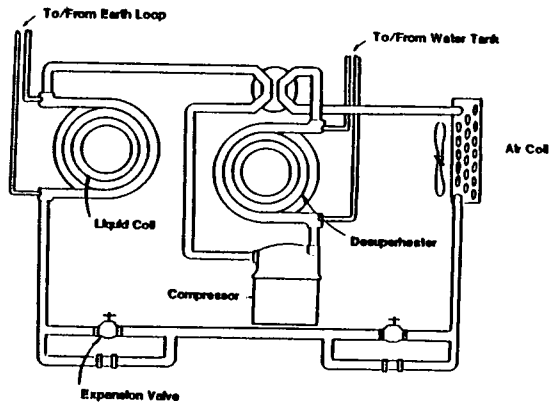

b) Demand Desuperheater

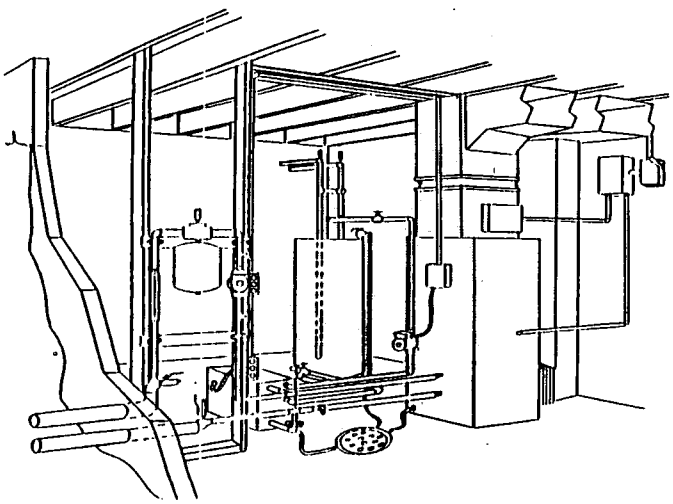

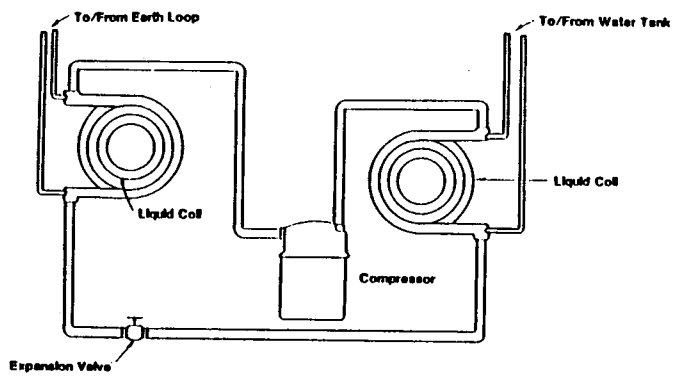

c) Separate Heat Pump

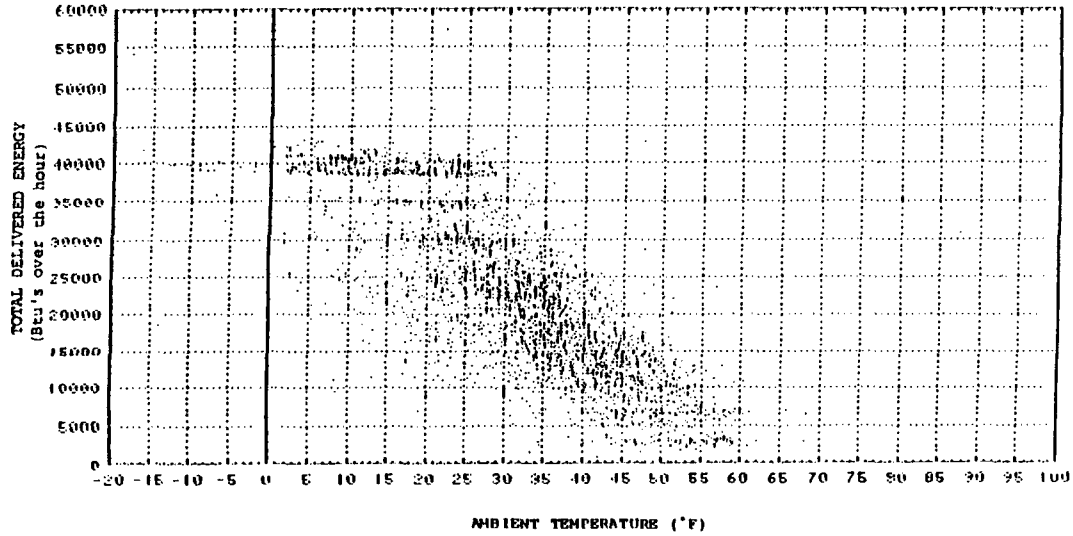

Figure 12 Delivered Energy vs. Ambient Temperature Scatter Plot

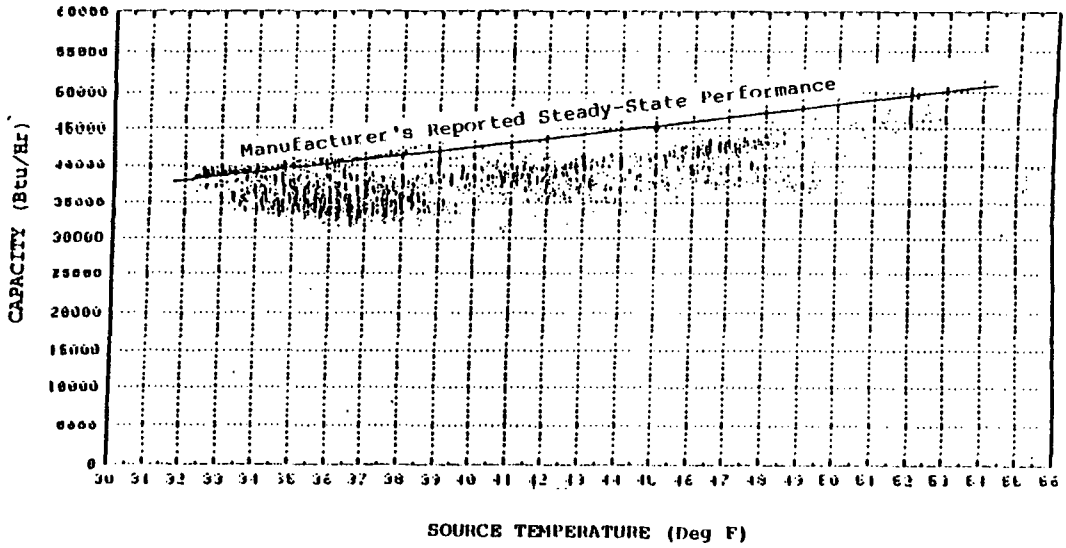

Figure 13 Capacity vs. Source Temperature Scatter Plot

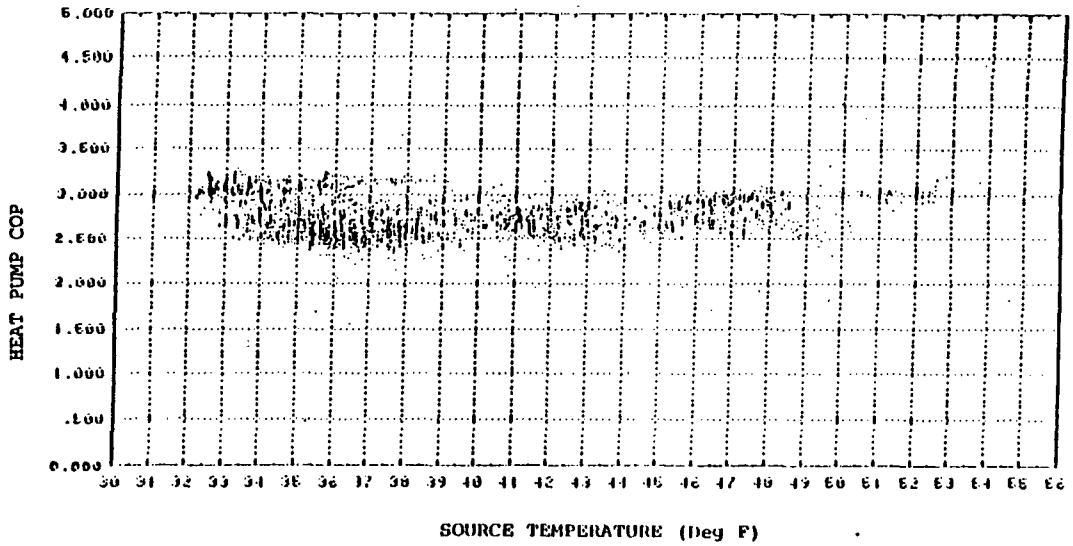

Figure 14 COP vs. Source Temperature Scatter Plot

Figure 15 Operational Summary

Data Report: Earth Coupled Heat Pump Monitoring

From 1/1/85 hour 00 to 1/31/85 hour 23
Database hours recorded: 722 (97.0%)

Mode: Heating Heating Degree Days: 1308

Average Earth Loop Pump Flow: 11.47 GPM
Average HVAC Air Flow: 2097 CFM

Temperatures-Deg. F	Average	Minimum	Maximum
Ambient Temperature	20.4	-6.8	39.7
Room Temperature	71.1	64.1	72.9
Supply Air Temp-Heat Pump	86.0	63.5	98.3
Return Air Temp-Heat Pump	66.4	55.4	70.1
Earth Loop Source Temp.	32.4	27.4	38.5
Earth Loop Return Temp.	27.7	23.6	36.0

Equipment Operation	Cycles	Hours	KWH	10 6 BTU
Heat Pump	1417	398.3	1540.91	*
Blower	1427	392.9	196.45	*
Earth Loop Pump	1420	398.3	151.35	*
Resistance Space Heat	219	37.5	326.53	*

Heat Quantities	(Millions of Btus)
Total Earth Loop Extraction	*
Heat Pump, Loop Pump, Blower Energy Consumption	*
Total Electric Energy Consumption	*
Total Air Side Space Heat Output	*
Resistance Space Heat Output	*

Performance Factors

Space Heating C.O.P.: *
Space Heating S.P.F.: *

* Deleted Intentionally

Figure 16 Ambient vs. Source Temperature Histograms

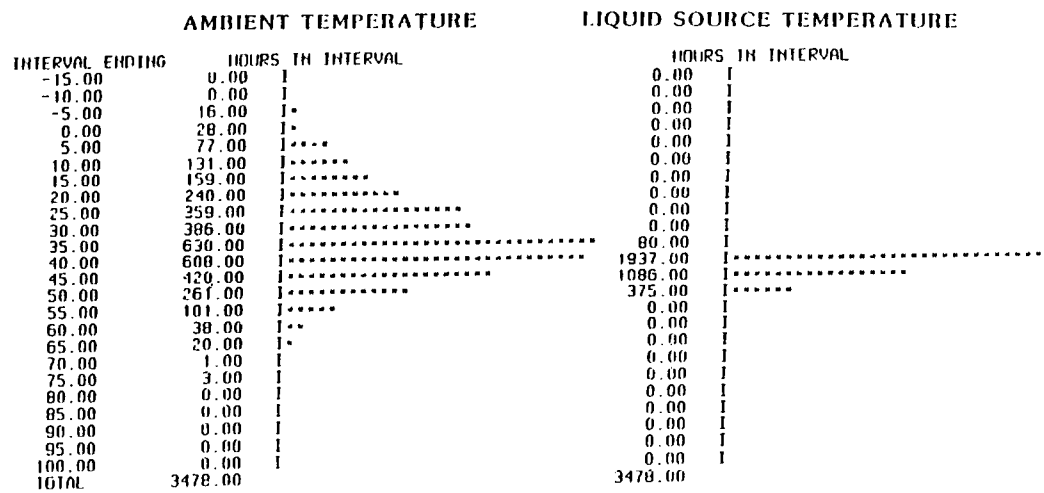

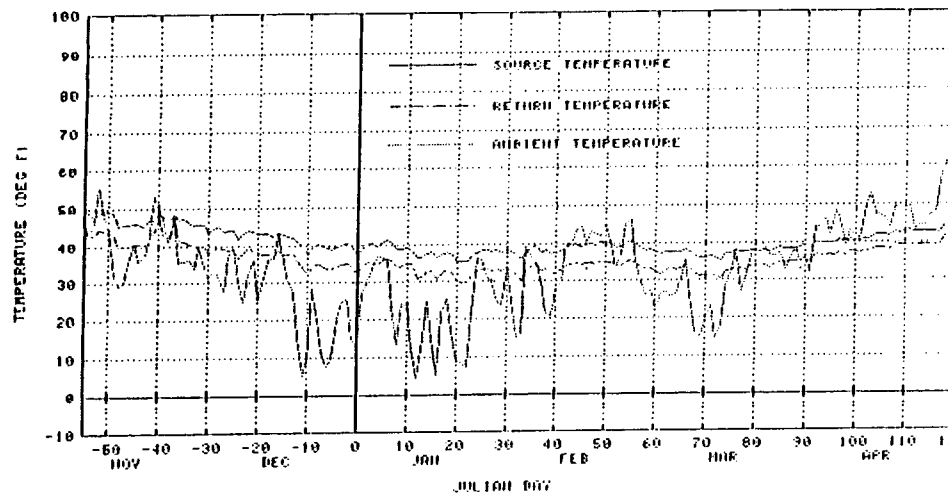

Figure 17 Daily Average Temperature Trends

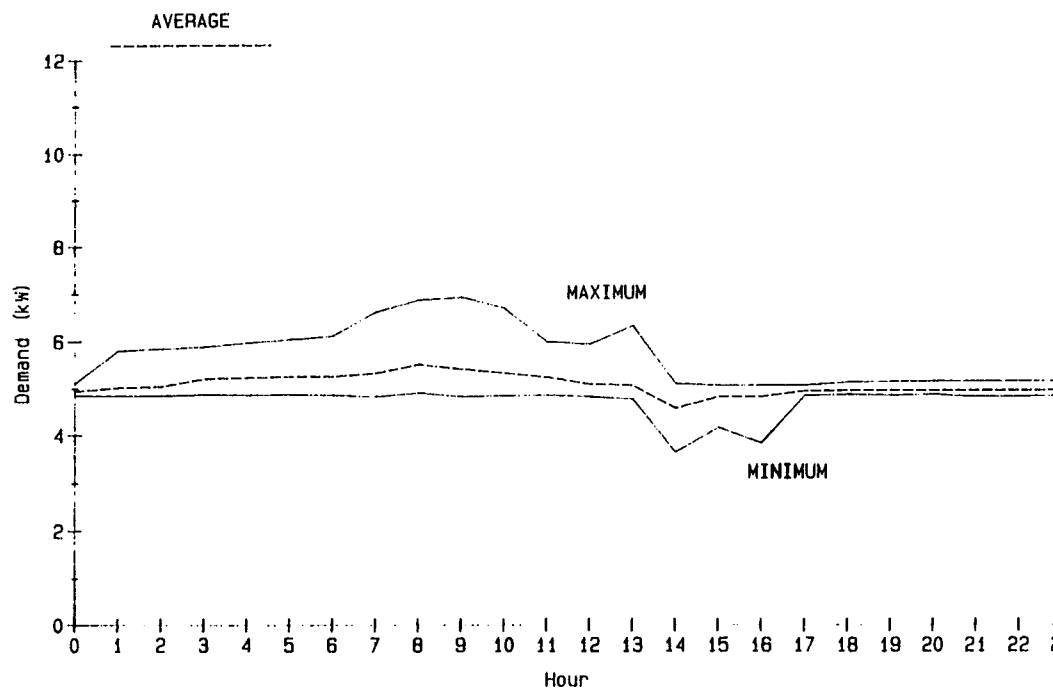

Figure 18 Heating Subsystem Electric Demand Profile
Winter Peak Days (Average of 10 Coldest)

Table 1 Data Point Specifications

a) Automated Hourly Data Point List

DATA PT. #	VAR. NAME	RAW DATA UNITS	RECORDED DURING:	DESCRIPTION
1	Day	Julian	All Time	Day Number; Jan 1 = 1
2	Hour	Hr. #	All Time	Hour
3	S1CCY	# in Hr.	All Time	Compressor Cycles
4	S4ACY	# in Hr.	All Time	Aux. Heat Cycles
5	S1CRT	Minutes	All Time	Compressor Runtime
6	S2BRT	Minutes	All Time	Blower Runtime
7	S3LRT	Minutes	All Time	Earth Loop Pump Runtime
8	S4ART	Minutes	All Time	Aux. Heat Runtime
9	TAMB	Deg. F	All Time	Ambient Temperature
10	TROOM	Deg. F	All Time	Room Temp. At Thermostat
11	TA1S	Deg. F	Blower On	Supply Air Temp.
12	TA2R	Deg. F	Blower On	Return Air Temp.
13	TL1S	Deg. F	Loop Pump On	Earth Loop Source Temp.
14	TL2R	Deg. F	Loop Pump On	Earth Loop Return Temp.
15	TFF1S	Deg. F	All Time	Far Field Temp - Shallow
16	TFF2D	Deg. F	All Time	Far Field Temp - Deep
17	KWH1C	KWH	All Time	Compressor KWH Use
18	KWH2H	KWH	All Time	Heating System KWH Use
19	KWDEM	KW	All Time	Heating System KW Demand
20	F1EL	Gallons	All Time	Earth Loop Flow

b) Analysis Constants

Power Consumption (Watts)
Compressor
Aux. Heat
Emergency Heat
Blower
Loop Pump
Crankcase Heater

Earth Loop Fluid
Antifreeze Type
Total Loop Volume (Gal)
Antifreeze Added (Gal)

Meter Calibrations
Total House (Wh/Pulse)
Heating/Cooling Subsystem (Wh/Pulse)
Compressor (Wh/Pulse)

Flow Rates
Earth Loop Flow (GPM)
Blower Air Flow (CFM)

c) Backup Metering (To Be Read At Regular Intervals)

Total House (kWh)
Compressor (kWh)
Heating Systems (kWh)
Compressor Runtime
Loop Pump Runtime
Blower Runtime
Electric Heat Runtime

Table 2 Verification Specifications

Level 1 - Range Checks

DATA PT. #	RAW DATA UNITS	DESCRIPTION	LOW LIMIT	HIGH LIMIT
1	Julian	Day Number, Jan 1 = 1	0.	366.
2	Hr. #	Hour	0.	23.
3	# In Hr.	Compressor Cycles	0	10.
4	# In Hr.	Aux. Heat Cycles	0	10.
5	Minutes	Compressor Runtime	0	60.
6	Minutes	Blower Runtime	0	60.
7	Minutes	Earth Loop Pump Runtime	0	60.
8	Minutes	Aux. Heat Runtime	0	60.
9	Deg. F	Ambient Temperature	-30	110.
10	Deg. F	Room Temp. At Thermostat	60.	80.
11	Deg. F	Supply Air Temperature	50.	120.
12	Deg. F	Return Air Temperature	55.	85.
13	Deg. F	Earth Loop Source Temp.	25	95.
14	Deg. F	Earth Loop Return Temp.	20.	100.
15	Deg. F	Far Field Temperature	20.	80.
16	KWH	Compressor KWH Use	0.	4.
17	KWH	Heating System KWH Use	0.	10.
18	KW	Heating System KW Demand	0.	10.
19	Gallons	Earth Loop Flow Over Hour	0.	600.

Level 2 - Relational and Performance Checks

1. Loop Pump Ran But No Flow Reported.
2. Compressor Ran But No KWH Reported.
3. Heating System Components Ran But No Reported.
4. Heat Pump Heating But Loop Source Temp. Less Than Return.
5. Heat Pump Cooling But Loop Source Temp. Greater Than Return.
6. Heat Pump Heating But Supply Air Temp. Less Than Return.
7. Heat Pump Cooling But Return Air Temp. Greater Than Return.
8. Heating and Cooling In Same Hour.
9. Electric Heat Ran But Heat Pump Did Not.
10. COP Less Than 2.5 Or Greater Than 4.

An Overview of the Guilding Principles Concerning Design of Experiments, Instrumentation, and Measuring Techniques

Mats D. Lyberg
Swedish Institute for Building Research
Gavle, Sweden

Gian V. Fracastoro
Politecnico di Torino
Torino, Italy

Abstract

As part of the activities of the International Energy Agency (IEA), Energy Conservation in Buildings and Community Systems Programme, Annex III - Residential Building Energy Analysis, one of the principal efforts was directed at methodology in gathering information on how buildings and equipment perform. The result was the handbook "Guiding Principles Concerning Design of Experiments, Instrumentation and Measuring Techniques" which had as its goal supplying to technicians, scientists, and project managers, involved with energy conservation in buildings, the basis for specifying the experimental approach and equipment for measuring building performance. Emphasis was placed on energy use evaluation before and after retrofits to the buildings. This paper will briefly summarize the choices available to those facing the challenge of building performance measurements. Basic principles, the design of experiments, the measurements of both building and environment, the energy associated with occupancy and how the occupant uses the building are all part of the approach outlined in the "Guiding Principles" that will be reviewed.

1. Introduction

When efforts were made to save energy in the building sector after the oil crisis in 1973, it was noted that many proposed energy conservation measures did not live up to expectations. The predicted savings had often been obtained using simple calculation schemes, sometimes based on laboratory measurements on building components. Research was then directed towards investigating what analytic and measurement techniques could be applied to explain the discrepancy between actual and predicted energy consumption. This effort took two different directions. One approach consisted in heavily instrumenting buildings and to monitor the energy consumption in great detail. Complex computer models were used to analyze the results.

The other approach was to limit as far as possible the level of the measurements, but instead to extend the measurements to many buildings, to different climatic regions, and to all seasons of the year. One then relied on statistical techniques to resolve the effect of energy conservation measures from perturbing factors such as variations in the outdoor climate and the influence on the energy consumption from people in the buildings.

A great effort to collect information on appropriate analytic and measurement techniques and in information gathering on how buildings and equipment perform was carried out within the framework of the International Energy Agency (IEA), Energy Conservation in Buildings and Community Systems Programme, Annex III - Residential Building Energy Analysis.

The result was the handbook "Guiding Principles Concerning Design of Experiments, Instrumentation and Measuring Techniques"[1]. which had as its goal supplying to technicians, scientists, and project managers, involved with energy conservation in buildings, the basis for specifying the experimental approach and equipment for measuring building performance. Emphasis was placed on energy use evaluation before and after retrofits to the buildings. This paper will briefly summarize the choices available to those facing the challenge of building performance measurements.

We will not discuss in detail properties of various sensors and measurement systems, but rather concentrate on a discussion when it is relevant to perform certain measurements, and the general principles and difficulties associated with measurements.

We will in the different sections discuss what distinguishes measurements on buildings from other measurements, the use of models, methods of measurement, experimental designs, the analytic and the statistical approach, and the impact of occupants on energy consumption in buildings. Finally, we will illustrate where, and how, in the energy conservation evaluation process, can be applied the tools available to those studying the energy performance of buildings.

By measurements we will here refer to data collection in a broad sense, not only measurements of physical entities using instruments, but collection of data that can be quantified. We will make a distinction between monitoring, i.e., continuosly performed measurements aiming at the determination of physical variables such as temperatures and energy flows, and auditing, by which we will mean the determination of building parameters such as U-values, plant efficiencies, etc.

2. The building system and measurements

A building must be considered a very complex system. It includes sub-systems or components whose properties are not exactly known or can only be determined with difficulty and a rather large error. Furthermore, these properties often vary with time. There are many energy flows that contribute to the energy balance of a building. Many of the energy flows interact with the building components in a complicated manner.

Measurements on buildings in many respects differ from measurements on other engineering and physical systems. A difference between buildings and many other systems is that controlled experiments can not be performed on buildings. This is due to the presence of residents and the fact that the outdoor climate can not be varied at will. The perturbance by occupants can be eliminated by using simulated occcupancy techniques. In most field experiments it is only possible to study the behaviour of buildings close to average operating conditions unless the measurement period is very long. In other words, in field measurements on buildings it may be difficult to isolate a single phenomenon for study due to the presence of perturbing factors. It will, therefore, in general be necessary either to use a model to correct for perturbations, or to apply statistical techniques to eliminate these perturbations.

Whilst laboratory techniques are available for the basic properties of building components, site measurements are needed to obtain the performance as built and as subjected to the actual climate conditions.

All measurements have to be cost-effective. Detailed direct measurements take time and are difficult to carry out. Therefore, they must to a large extent be substituted by other means of collecting data. Many data are collected from energy bills, architectural drawings, etc., sometimes using simple algorithms to compute desired data from recorded data. Often no single measurement method can obtain all the necessary information, but several data gathering techniques have to be used.

Among the measurements carried out in energy studies of buildings, one can distinguish measurements on:

1) external climate,
2) internal climate,
3) heat transfer through the building envelope,
4) air infiltration and ventilation,
5) energy conversion and energy flows in the heating system,
6) energy consumed by appliances, and
7) the impact on energy consumption from the behavior and habits of occupants.

To illustrate the use of various methods in the determination of the energy balance of a building, take as an example air infiltration. One can use tracer gas techniques to determine the instantaneous value of the air change rate. It may then be difficult to predict the average air change rate for a longer period. Tracer gas techniques can also be used to determine the average air change rate for a period of weeks or months. It will then not be possible to determine the dependence of air infiltration on wind speed and external temperature. Pressurization can be applied to test the performance of the building envelope with regard to airtightness. The air change rate can then be assessed only indirectly. Finally, for a particular building, one can use default values or values obtained using a calculation scheme based on a simple model, the building geometry and design, the climate at the building site, and measurements from other buildings belonging to the same category.

3. The use of models

If a model is used in energy studies of buildings one has, in general, to use a model treating a building as a system governed by physical laws and the rules set by the control system. One must often make some rather crude approximations to arrive at a simple model suited for practical use. Only the most prominent features of the performance of a building as a physical system can then be included in the model. An inherent weakness of models treating a building as a physical system governed by deterministic laws is that they do not take into account the actions by people in the building. It is well known from studies of the variation in energy consumption between nominally identical single- family houses, that only about one third of this variation can be explained by physical differences between the houses. The rest is due to different behavior by the residents.[2, 3] A model of this kind is valid as long as the residents do not override the control system, i.e., the model will loose its validity if the indoor climate deviates too much from the one expected by the residents.

The experience of using models, ranging from simple calculation schemes to sophisticated

computer models, has not always been positive. It has been found that in large statistical surveys of the energy conservation effect of retrofits, including only measurement of energy consumption, there may not be a very good correlation between the actual change in energy consumption and the one predicted by calculations.

There is, however, seldom a need for very detailed models, as most measurements in buildings are associated with a relative error from one to ten per cent, or more. It is seldom of interest to consider energy flows whose magnitude is insignificant compared to the total energy consumption. If the data collected are to serve as input to an economic evaluation, including assumptions about the future rate of interest and future energy prices, one can, considering the uncertainty of such assumptions, accept an error of the technical calculations greater than ten per cent.

To illustrate the various ways even a simple model can be used, we will here describe the use of a very simple model, the one where energy consumption, E, is assumed to be linear in external temperature, T_e, i.e.

$$E = A + B * T_e$$

where A and B are the parameters of the model. The success of this simple model may seem surprising as many energy flows are not directly related to the external temperature. However, many energy flows vary throughout the year in the same manner as does the external temperature, i.e., as a function of time they can be approximately described by a constant plus a term proportional to a sine curve, but are not necessarily in the statistical sense correlated to the external temperature. Examples of such energy flows are those that depend on solar radiation, wind speed, ground temperature, or air moisture content. Let the external temperature be given by

$$T_e = \bar{T}_e + \Delta T * \sin(\omega * t)$$

where $\bar{T}_e$ is the average external temperature, t is time, and ω is the frequency corresponding to a period of one year. A model more complete than the one above would then be given by

$$E = A_e + B_e * T_e + \sum_i \left[A_i + B_i * \sin(\omega * t + \delta_i)\right]$$

where δ_i is the phase relative to the external temperature, and the summation is over the energy flows. Any equation having a right hand side of the same form as the above equation is identical to an equation of the form

$$E = A_o + B_o * \sin(\omega * t + \delta_o)$$

where the parameters A_o, B_o, and δ_o depend on the parameters A_e and B_e and on all the parameters A_i, B_i, and δ_i. However, this equation can be evaluated as

$$E = A + B*T_e + C*\sin(\delta_o) * \sqrt{\left[1 - \left(\frac{T_e - \bar{T}_e}{\Delta T}\right)^2\right]}$$

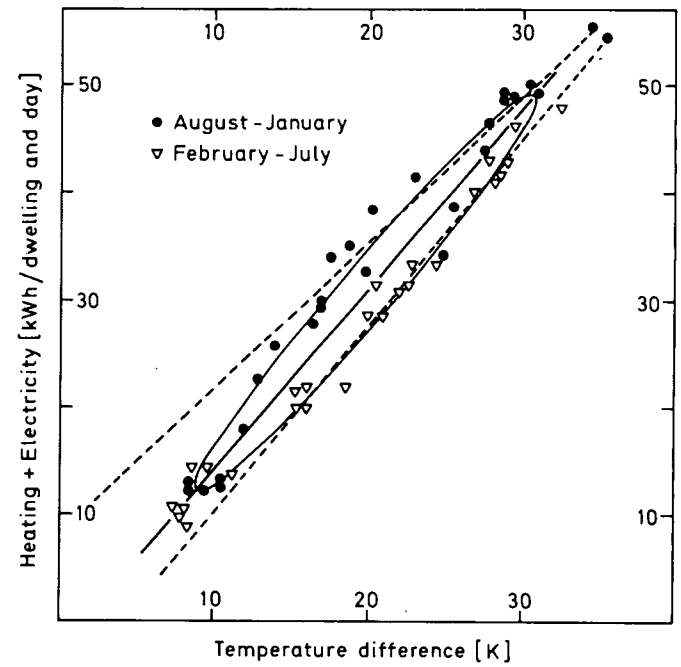

Fig 1

Net energy versus temperature difference for an apartment building (weekly data). The phase difference is about 14 days. The full drawn line is the best fit to data from the whole heating season. The hatched lines are the best fits to data from the first and the second halves of the heating season, respectively

It can be shown that in a plot of the energy consumption E versus the external temperature T_e, the data points will fall on an ellipse. An example is given in Fig. 1. If the resulting phase δ_o, or the constant C, is small the last term in the equation above can be neglected and the model

$$E = A + B * T_e$$

gives a good description of the energy consumption of a building under static or semi-static conditions. This will be the case even if many energy flows are not directly related to the external temperature. However, care should be taken when giving the parameters A and B an interpretation in terms of physical properties of a building.

4. Measurement methods

In a measurement one determines the numerical value taken by a physical observable. It is assumed, that, in the measuring procedure,

the relation between this observable and the measured entity is exactly defined and that it is described precisely under what circumstances and in which way the measurement can be performed. As all measurements are approximations, a measurement is not very interesting if the measured numerical value is not given along with an estimate of the error of the measurement.

In this section we will discuss direct measurements, survey techniques, observations and inspections, and data collection from archives and records.

4.1 Direct measurements

If applicable, direct measurement is generally the method to be preferred. Errors are often small compared to when another data gathering technique is used. Using direct measurements it is possible to achieve a disaggregation of the end use of energy. Having a small resolution in time, the dynamic building performance can be studied. The drawback of direct measurements is the cost.

The largest error that can be allowed in the measurement of variables and parameters will in general be given by the goal of the investigation and the demands of the model. What is of interest is the resulting error of the sensor, data acquisition system, data storage, and data handling procedure.

As an example, consider the measurement of indoor temperature. It is obvious that "the" indoor temperature is difficult both to define and to measure. In most cases one places sensors in only a few dwellings in an apartment building or in a few rooms in a house. For the error evaluation one has to distinguish between three kinds of error:

1) the accuracy of the sensor (the sensor may for example be exposed to radiation),
2) errors associated with the representativity of the sensor positions (due to the presence of thermal gradients), and
3) sampling errors (for example temperature fluctuations with time at sensor positions).

The error of the first kind is due to properties of the measuring device. For some errors of this kind it is, in principle, possible to calculate a correction factor and thus reduce the size of the error. For other errors there is in general no way of performing a correction. If several errors are present, it is common to define the resulting error as the square root of the sum of the individual errors squared.

4.2 Observations and inspections

Observations and inspections are not always of a qualitative nature. Data can sometimes be quantified. Observation is therefore an alternative to direct measurements, especially if monitoring is not necessary. An example is the inspection of the quality of craftmanship when a retrofit is implemented.

A drawback of observations and inspections is that an experienced and qualified operator is required. To assess the energy status of a building by inspection can not be mastered in a few days. The auditor must be able to clearly understand how the building is operated, detect problems, make accurate decisions, and write a report.

Observations are more reliable than survey techniques in gathering information about the occupant's actual behavior. Observations give the possibility of recording and measuring the occupant's behavior in his usual environment. Some common errors associated with inspections are: errors due to misunderstood instructions, erroneous use of numerical tables, unanswered questions, false information from building owners, managers and operators, etc. In surveys where a sample of buildings are to be inspected, many objects often have to be rejected as the building can not be accessed for inspection.

4.3 Survey techniques

Survey techniques include the use of interviews and questionnaires. Using survey techniques, it is often possible to collect information more rapidly than by other means. Often there is certain information that can only be collected from those in charge of the daily building maintenance. Survey techniques can be used as an instrument to obtain information about the attitudes, behavior and habits of occupants related to the energy consumption. However, estimates by the occupant of his own habits and behavior are often not very reliable.

The interview is a quick way of gathering information. It is flexible and can be carried out at the building or by telephone. Compared to many other techniques, less effort on the part of the respondent is required.

Using questionnaires is an inexpensive method which enables one to obtain information from a large number of people. It is less time-consuming to administer a questionnaire than to conduct an interview. When a questionnaire is used, the situation is more uniform. The information can be coded and thus permits comparisons.

A common experience from interviews with building owners and managers is that they do often not know the answer to specific questions regarding their building. It often takes a skilled interviewer with technical training to interpret their answers. A frequent experience

from the use of mailed questionnaires is that only a small fraction of the questionnaires are returned. Survey techniques should in general not be used without consulting experts.

4.4 Use of archives and records

Data collection from archives include, for example, the collection of information on the energy consumption of a residential building from utility records. It can also include the collection of data on the age, size, and other building characteristics from a tax office as well as the architectural drawings. Compared to survey techniques this method has the advantage that even if there may be substantial errors in the material, it is unusual to find falsified records. In general the errors will not be known when data are collected from archives and records unless one has access to two records with partly overlapping data. Such data can be compared to give an idea on how correct and consistent data are.

A common error is the one associated with collection of data on delivered energy. The bills are often based on an estimated consumption or the reading day is not usually indicated. In oil deliveries it is often not noted what is the content of the tank before delivery, or the tank is not filled. Data on a residential building taken from a municipal tax record may be erroneous simply because the owner of the building has given false information to the tax office. Other common errors are wrongly calculated areas and volumes. Architectural and engineering drawings in archives may sometimes be too old, building owners may, for example, have rebuilt their buildings without documentation after the original drawing was made.

5. Experimental designs

In this section we will treat the most common experimental designs used in building energy studies. They are:

1) the test-reference design,
2) the before-after design, and
3) the on-off design.

The choice of design will depend on many factors. The number of heating seasons available for measurements will be of importance when choosing between the before- after and the test- reference design. If the retrofit can be reversed, the on- off design can be used. To a great extent the choice will be governed by conditions that should be fulfilled if a certain experimental design is used.

5.1 The test-reference design

In the test-reference design the energy performance of a group of buildings (the test group) is compared to that of another group (the reference group). Both groups should be of the same size. One has to assume that the reference buildings are identical to the test buildings in all respects apart from one component that has been introduced or one energy conservation measure that has been implemented. One should compare the energy consumption of the two groups for a period before the implementation (the calibration phase) to see if there are any significant differences in energy consumption. This phase is then followed by the measurement period (the comparison phase). The following conditions must be fulfilled:

1) the buildings are really identical before the retrofit, not only nominally identical,
2) the occupants of the two buildings behave in the same way before the conservation measure and if they change their behavior afterwards, this change is identical and due to different weather conditions, and
3) the indoor climate of the buildings is the same before the retrofit and that of the test buildings remains the same after the retrofit.

When the test reference design is used, these underlying assumptions or conditions must always be verified if the energy consumptions alone are measured and compared to one another. Otherwise unpredictable errors will always be present. Some conditions can be relaxed if other measurements are made and a reliable model is used in the analysis. A common finding is that it takes some time before people in the building get used to the new conditions. It is an advantage if the measurements are preceeded by a "running in and learning" period during which people can adapt to the changes that have been made.

5.2 The before-after design

When the before- after design is used, a comparison is made of the energy consumption before and after the implementation of an energy conservation measure for one building or a group of buildings. The before and the after period should be of the same length and from the same season of the year. The following conditions must be fulfilled:

1) the same data types must be collected before and after,
2) the behavior of the occupants does not change unless the change is due to the conservation measure,
3) since the weather is not the same before and after the conservation measure, a model must be used to correct for this difference, and
4) since the indoor climate may not be the same before and after the retrofit, a model must be used to correct for differences in energy consumption due to changes in indoor climate.

As for the previous method these

assumptions must be checked if energy consumption alone is measured. Therefore, one should also in this case try to have a "running in and learning" period.

5.3 The on-off design

A third design exists, similar to the before-after design, called the on-off design. This can be used when the energy conservation measure is reversible. The energy consumption is then measured during a number of repeated on-off cycles, and the consumption during the on-periods is compared to that of the off- periods. When this method is applied, the same conditions must be fulfilled as when the before- after design is used. The on- off cycles should be longer than typical time constants of the building. A correction for differences in the outdoor climate should be made as when the before- after design is used.

6. The analytical and the statistical approach

In R&D projects aiming at the evaluation of the potential energy conservation of a particular measure, one is interested in getting a result that is applicable to as many buildings as possible. For practical reasons one can only carry out measurements in a limited number of buildings. One is also interested in replacing measurements, as far as possible, by reliable calculations, and in getting rid of large errors. One can then choose between two different approaches:

1) a single, or a few, buildings are chosen, representative of a certain category (the analytical approach), or
2) a larger sample can be used to minimize the influence of uncontrollable variables (the statistical approach).

6.1 The analytical approach

The analytical approach has to be chosen if measurements can only be performed in a few buildings or if the energy flows associated with the energy conservation measure interact with other energy flows in a complex manner.

In the analytical approach the generalization to other buildings is done via the model. The value of the model parameters are either assumed to be known, or can be determined by an audit, or are determined by a fit to data from the monitoring (free parameters). This requires that the model parameters have a simple and reliable physical interpretation. Parameter values for other buildings can then be calculated from design data, or are easily measured. The model used is then likely to be less sensitive for small errors in the input values of the parameters.

Among the advantages of the analytical approach is that one has a better control of what is happening in the building. In most cases it is also less expensive to use the analytical approach. One disadvantage of this approach is that it is more sensitive to the effects of occupancy. The effects of occupancy are in general not known, can seldom be measured, and are difficult to include in a model.

6.2 The statistical approach

The statistical approach can be used when the interactions between the implemented energy conservation measure and other building components are small. In this case energy flows associated with other components do not have to be modelled in detail. The statistical approach can also be used without any model at all by just comparing the energy consumption for two groups of buildings, one group where the measure has been implemented, and one where it has not. A statistical approach requires a large number of buildings. The exact number is determined by the estimated energy savings, and the variation in the energy consumption among the buildings to be studied.

The advantages of the statistical approach are mainly associated with the possibility to reduce the size and number of errors. The resulting average error may become statistically insignificant compared to the reduction in energy consumption. The effects of occupancy may, for example, average out if a sufficient number of buildings are studied. Another advantage is the reduction in measurement level.

One disadvantage is that one has less control of what is happening in the buildings. Systematic errors will not average out. A side effect of an implemented measure may, for example, be that the indoor temperature is no longer the same. The use of this approach can be doubtful if nothing but energy consumption is measured. The resulting error can be reduced if some simple measurement besides that of the energy consumption is performed. The cost for these measurements has to be weighed against the cost for studying a large number of buildings.

7. The occupants influence on energy consumption

For a simple understanding of the occupants influence on energy consumption it may be useful to divide the complex of behavior, habits and activities of the occupant into:

1) operations involving consumption of energy in a direct form, and
2) operations aiming at control of the indoor climate.

Operations of the first kind involve the consumption of energy in a direct form, often associated with the use of domestic appliances.

Energy will then be consumed directly in the form of electricity, gas, oil or hot tap water. If an occupant needs to perform an operation of this kind, he can only indirectly influence the amount of energy that is consumed. Some appliances are used by the occupant to save time and to reduce the amount of manual work needed to perform an operation (e.g. the use of a dish-washer). Often this also means that the amount of required energy is reduced. Other appliances, like illumination and TV, are not used to replace manual work. The use of these appliances will always increase the energy consumption.

The second kind of operations listed above do not directly require an energy source, but are operations performed by the occupant in order to control the indoor environment. For some operations it is very difficult to determine the impact on the energy consumption. The extent to which some operations of this kind are performed is also more directly influenced by social and cultural norms.

An example is the choice of or demand for a certain indoor temperature. The demand for a higher indoor temperature is probably linked to the tendency to wear lighter clothing at home. It is also common today that the occupant tries to keep a comfortable temperature in all rooms of the dwelling.

If the occupant does not feel comfortable with the prevailing indoor climate, he will try to modify it in the desired direction. What action he will take will depend on the means at his disposal. The resulting behavior of the occupant may be very unpredictable. If it is too cold he might turn on an electric stove rather than change his clothing. If it is too warm he might open a window. This may easily offset any calculation schemes for the prediction of energy consumption.

A factor that should not be forgotten is the attitude of the occupant towards energy saving. If the occupants can not understand the reason why a residential building is retrofitted, he may act in such a way that the purpose of saving energy is not achieved. It is therefore important not to regard the occupant as a passive consumer of energy but to take into account the interaction between environment, building and occupant.

7.1 Variations in energy use due to variations in indoor temperature and use of appliances

In many discussions about the effect of occupancy on energy consumption it should be kept in mind that data refer to an "average behavior" of the occupants. The scatter around every such "average" will be large. The cause of this scatter is rather complicated. Attempts to correlate energy consumption to different factors such as the size of dwelling, family size, income, education, occupation, or age have been only partly or not at all successful. In most experiments one has found that the standard deviation of the total energy consumption in a group of "identical" houses lies between 20 and 30 % of the average total energy consumption.

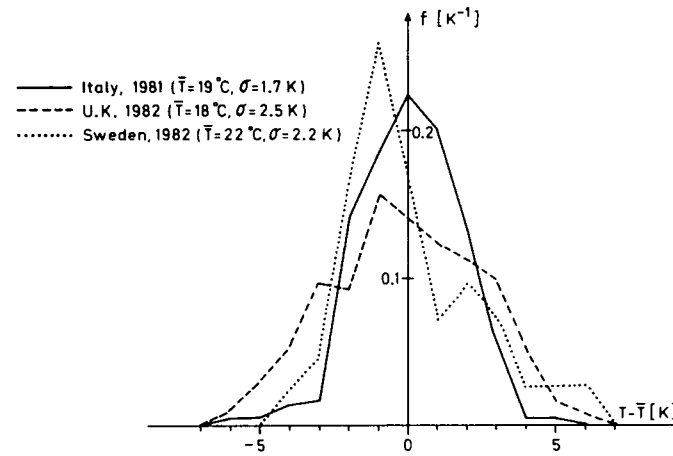

Fig 2

Distribution function of the variation of indoor temperature in dwellings, T. $\bar{T}$ is the average indoor temperature, σ the standard deviation

One major source of the variation in energy consumption is the variation in the average indoor temperature between dwellings. In studies of the indoor temperature one often finds that the standard deviation of the average temperature in a group of dwellings is close to 2 K, even if the average indoor temperature may vary from one country to another. Some examples are given in Fig. 2 [4,5,6]. How much of the variation in total energy consumption can be explained by this variation of the indoor temperature will of course depend on the average indoor- outdoor temperature difference and the degree of insulation of the dwelling.

The variation in the consumption of household energy is superimposed on the variation in the indoor temperature. Here one often finds that the standard deviation of a certain kind of household energy consumption is as large as 50 %. As an example we give in Fig. 3 [7,8,9] the distribution function of the use of hot tap water from investigations in some countries.

Very few studies have been performed where a disaggregation of energy use has been made in such a way that the variation in different energy uses can be studied. In Fig. 4 [10] we give an example where the standard deviation of the total energy consumption is rather small, while the variation in the energy consumption for different household activities is much larger.

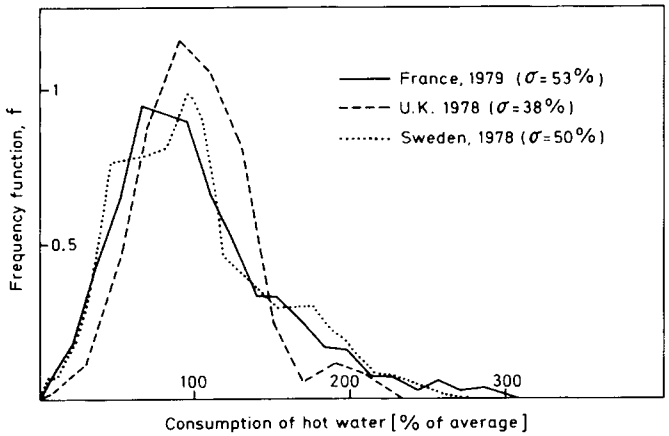

Fig 3

Distribution function of the consumption of hot tap water to the average consumption. σ is the standard deviation

The cost of energy will of course also affect the energy consumed by the occupant. This can be of great importance in experimental situations. If the energy consumed by the occupant participating in an experiment is subsidized, the result may be that he prefers a higher indoor temperature than he would have done under normal circumstances.

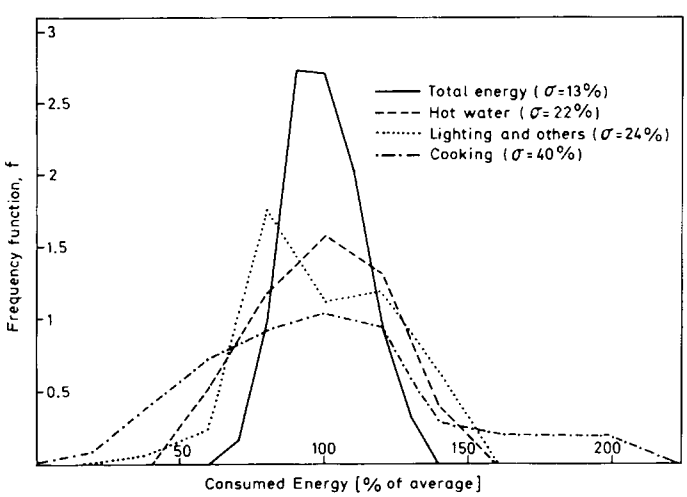

Fig 4

The distribution functions of the relative energy consumption, hot tap water consumption, cooking and lighting and other consumption for a group of identical, electrically heated single family houses. σ is the standard deviation

7.2 Variation in consumed energy due to behavior and attitudes

Much of the discussion on energy saving by retrofitting residential buildings has been about purely technical measures. However, it should be realized that an equal amount or even more energy would be saved if the behavior of the occupants could be changed, or if every occupant was really motivated to save energy at home.

It is important to realize that the behavior and attitudes of the occupants may change with time. In many studies of the effects of retrofits it has been found that energy saving has been great at the beginning of a programme, but then it has gradually faded away. One has, however, also noted the opposite effect. In retrofits, including the introduction of more complex systems into the building, sometimes no energy has been saved during the first heating season, but a substantial reduction in energy consumption has taken place during the second heating season after the retrofit. The probable explanation is that it has taken the occupants quite a long time to learn how to handle the new system. It may therefore be an advantage if, in studies of the retrofit effect, the occupants can be given time to adapt to the new living conditions before the measurements start.

The effects described in the previous paragraph will obviously be of special importance in cases where the measurement period after the retrofit consists of one heating season only. In this case it would be an advantage if one could follow at least the total energy consumption of the building during still another heating season to make sure that the effect described above is not at hand.

In experiments involving inhabited residential buildings it is important that the occupants are informed in advance about the research programme, what measures are going to be taken and what changes in the indoor climate are to be expected. If possible, changes should be introduced gradually to give the occupants the possibility to adapt to the new environment. The result may otherwise be complaints, and a negative attitude of the occupants towards the research project that may affect the outcome of the investigation.

7.3 Measurements of occupancy related energy consumption

A disaggregation of the direct energy use by occupants will in general not be necessary if one is interested only in the total consumption of domestic energy. It can usually be read off directly from a meter once a month or year. However, data from measurements of this kind can be used in a calculation of the energy balance of a residential building for the evaluation of a retrofit.

If one uses data collected from records, one will, in general, have information only

about the consumption of energy by the "average household". This may be sufficient if one is using a simple model, or is studying the effect of a retrofit on a large number of households. Otherwise the energy consumption of the residential building will have to be monitored. It will often be necessary to get a sufficient disaggregation of the end use of household energy if the results of the measurements are to be used as input to a model to simulate the thermal behavior of the building in another environment, or if the results are to be applied to other buildings. In this case one will, for the major energy consuming appliances, need information about

- the demand profile (with a time-resolution as in the model),
- the energy consumption by each appliance, and
- how much of the energy consumed by a certain appliance contributes to the heating.

It is in general difficult to relate energy consumption to socioeconomic factors such as income, age, occupation, etc. The correlation between energy consumption and any single socioeconomic factor tends to be weak. It is, therefore, not often meaningful to collect socioeconomic data unless one is working with a large statistical sample of buildings. It may be more relevant to collect data on the behavior and habits of occupants such as:

- the occupants' attitudes to and motivation for energy saving,
- when the occupant is at home,
- the use of set points,
- the use of ventilation system,
- the habits of airing, shielding windows, etc.
- the use of appliances,
- the use patterns of hot tap water, and
- the occupants experience of the indoor comfort

Information of this kind can be obtained in several ways. One can apply survey techniques. Occupants are interviewed, or fill in a form. Observations can also be used. This is not so common in practice.

Monitoring of the occupant's choice of set- points is rather easy for some heating systems, e.g., electrical heating. For heating systems not allowing an easy monitoring, survey techniques can be used. In this case the use of survey techniques is facilitated by the fact that many occupants prefer the extremes when choosing set points, either completely on or completely off, or at a rather low or a rather high temperature, whichever is relevant for the heating system under study. Furthermore many occupants seldom change the set points.This of course also makes it easier to use observations.

Monitoring of the occupant's use of building systems driven by electric motors, e.g. mechanical ventilation systems, is rather easy by simply recording the presence or absence of an electric current or a magnetic field.

8. The evaluation process

In this section we will discuss the (idealized) process followed in evaluations of energy conservation measures. This process should not be regarded as a process consisting of separate steps that have to be executed in a prescribed order. There should always be a feedback to the previous stages of the process. If some planned measurements turn out to be too expensive, one may have to revise the measurement system, the model or even the experimental design. If it is not possible to perform measurements with an accuracy and a precision demanded by the model, this one will have to be changed.

The process described here is also a staged process where alternatives are eliminated by an increasingly more detailed analysis. For a fuller treatment of this topic, see ref. 11.

8.1 The Task

The first step in the process will often be a request made to the project manager by a client to solve a general problem as "what is the energy saving which can be achieved through a certain retrofit?". This request will establish the main limitations, and objectives, of the investigation. The financial budget and the available time will generally be proposed by the client at this stage.

8.2 The aim of the investigation

The second step consists of a precise formulation and quantification of wanted information and wanted accuracy of the results as well as a specification of maximal cost and available resources. If possible, this should be done in co- operation with the client. The client should, if necessary, be helped to better express exactly what he wants, and get an idea of what results can be expected with the proposed budget.

8.3 Evaluation of the problem

Here one makes a preliminary evaluation using already existing information. One should make a rough estimate of the magnitude of the energy flows, using a simple static model, neglecting the effect of occupants, making use of typical meteorological data and taking into account the characteristics of the control system. This should provide the basis for a decision whether there is a real need for an experimental evaluation or if existing calculation schemes can be used to solve the problem.

8.4 Description of the system

This step consists of a qualitative description of the system. The aim is to reduce the number of energy flows that have to be considered, measured, or included in a model.

One must define the building and the building components, weather, environment, occupants and interactions between those factors. The description will require an understanding of how the components of the system are influenced by the energy conservation measures. One should determine all energy flows that interact with the energy conservation measure and identify the components of the system which affect these energy flows. One will then have reduced the initial complicated system to a more tractable one. In this work it is often of help to use a simple graphic model of the energy flows (see fig. 5).

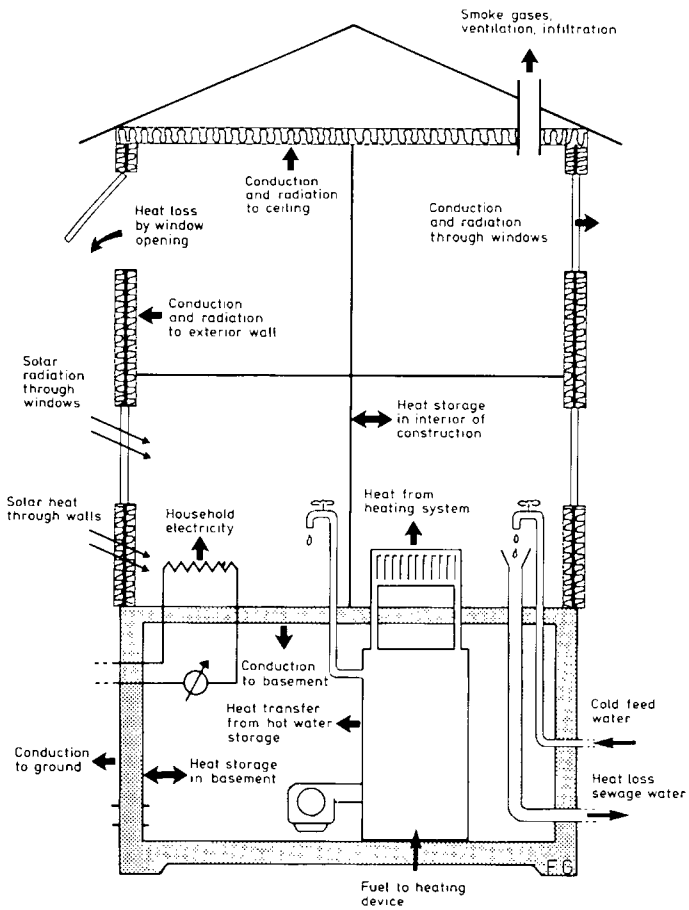

Fig 5

Examples of heat flows in residential buildings

8.5 The design of data collection and models

The details of the model are decided at this stage. One decides upon the extension, level, and accuracy of measurements to be performed, or decides where no measurements are required. One should also consider economic aspects of the measurements. The outcome should be a detailed plan for what and how to measure, and with what accuracy.

The aim is to construct a model with as few a number of energy flows and parameters as possible. One must decide the maximal error due to the measurements that can be accepted for the estimate of the energy conservation effect. This will determine by what resolution and precision the measurements have to be performed.

One has to consider what energy flows can not be measured or are influenced by uncontrollable variables. This information will govern the choice between the analytic and the statistical approach. The accuracy decision for the measurement of energy flows will also determine with what accuracy the parameters of the model have to be determined. One may use default values, determine the value through an audit, or leave the value to be determined by a fit to measured data. One should strive not to have an experimental accuracy much better than the required one.

If the statistical approach is used, one must determine the sample size so that the desired accuracy can be obtained. One has to select the test buildings and decide how the building owners are to be approached. In the case of monitoring one must decide the length of the monitoring period and the time- resolution of the measurements. When deciding upon the use of a particular experimental design, one must check if the underlying assumptions are fulfilled.

When the approximate cost and extension of the measurements and evaluation are known, this should in all cases be discussed with the client before any further work is carried out.

8.6 Planning of the measurements

The work here consists of decisions on what instruments and measurement system to use. For monitoring, the whole measurement system from transducers to data storage, has to be planned. The sensors will be chosen along with installation rules and techniques. Programs for online elaboration and surveillance of data should be prepared [12], data storage planned and the sampling time for every measured quantity chosen. One should plan the appropriate training and instruction of the measurement team.

One has to plan what information is desired from building owners, and plan the interviews or construct the forms to be used for the data collection.

In the case of monitoring, one should make a time plan for when measurements have to start

and stop, decide upon the length of the test period for the measurement system, and estimate the time required for data analysis and for the writing of a report. One should make a plan for action in case of missing or unaccessible data and evaluate if measurements can be carried out within the implied constraints (cost, available instruments, etc.)

The accuracy of the measurement chain can now be established and compared with the expected resolution of the model. If it turns out to be insufficient to match the model requirements, other measurement techniques should be chosen.

8.7 The execution of measurements

Before audits and monitoring starts, the measurement team(s) should receive the decided training and instruction.

In the case of monitoring, the equipment should be installed in situ, without causing unnecessary disturbance to the occupants activities. The occupants will have to be instructed about what to do in case they damage the apparatus or detect a malfunction. The whole system should be tested before starting the measurement program.

If all the previous steps have been carefully considered, during the measurement program only routine operations should be required, aiming at the prompt detection of any possible system malfunctions.

If there are several measurement teams operating, one should check that their data handling procedures do not diverge. If data collections other than direct measurements are carried out, one may detect that some data are unaccessible and it will be necessary to investigate if there are other means by which these data can be collected.

8.8 Data analysis

In the data analysis, one should start by rejecting bad data stemming from previously undetected malfunctions. The project manager should always write a report describing how he faced and solved the questions posed at each stage of the investigation and how the data were collected. The report should contain a description of the building construction, systems and occupancy, comments on present condition, operation and maintenance, data tabulations, a description of the energy conservation measures considered. The results should be presented by graphs, tables , as well as statistical figures and equations if models have been used.

The model should now be used to correct the result from the effect of uncontrolled variables, for example, data may be normalized with reference to some specific set of climatic data. When generalizing the results to a larger population of buildings, one could perform a sensitivity analysis to see how errors in estimated model parameters will affect the result.

One will also have to evaluate the model error. The data should be used to estimate the numerical value of the parameters of the model. The model in its turn, is validated by checking the consistency of the values of the parameters with those provided by previous experience or knowledge. If all checks are positive, it will be possible to use the model as a predictive model and therefore to apply it to other "similar" buildings.

References

1 G. V. Fracastoro and M. D. Lyberg, Guiding Principles Concerning Design of Experiments, Instrumentation and Measuring Techniques, Report from IEA Annex III: Residential Building Energy Analysis, The Swedish Council for Building Research, Document D11:1983,1983

2 R. C. Sonderegger, Movers and Stayers, Energy and Buildings 1, pp. 313-324, 1978

3 E. Lundstrom, Energy Consumption in Single-Family Houses, Dept. of Building Economics, The Royal Inst. of Technology, Stockholm, Sweden, 1980

4 C. Boffa and F. Rubini,Monitoring of Existing Buildings in Italy, Contribution to Proc. of the Int. Coll. on Comparative Experimentation of Low-Energy Houses, Liege, Belgium, 1981. Universite de Liege, 1981

5 P. O´Sullivan and P.A. McGeevor, The Effects of Occupants on Energy Use in Housing, Proc. of CIB W67 3rd Int. Symp. Energy in the Built Environment, Dublin, Ireland, 1982. CIB 1982.

6 M. Holgersson, Domestic Indoor Temperatures, Report from Swedish Institute for Building Research, 1983

7 D. Bienfait, Contribution a une meilleure connaissance des consommation d´eau chaude des logements, Cahiers du CSTB, No 205, Paris 1979.

8 G.E. Whittle and P.R. Warren, The Efficiency of Domestic Hot water Production out of the Heating Season, BRE Current Paper CP 44/78, 1978

9 S. Nilsson and T. Lundgren, Individuell Varmvattenmatning, Report R23:1979, The Swedish Council for Building Research, Stockholm 1979

10 N.O. Solum and O.A. Songe-Moller, Smahusoppvarmning, NBI Report 81, Norwegian Building Research Institute, Oslo 1974

11 M.D. Lyberg, G.V. Fracastoro, D.T. Harrje and L. Jones, Energy Measurements in Buildings, to be published in Energy and Buildings

12 A.J. Parker, Jr. and R.D. Scott: Sensor and System Fault Detection Using Statistical Techniques, Paper included in this Report.

Design of a Large-Scale Metering Project

Richard P. Mazzucchi
Battelle Pacific Northwest Laboratory
Seattle, Washington

Introduction

This paper describes the design and implementation of a large scale end-use energy measurement program for commercial buildings. Entitled the "End-use Load and Conservation Assessment Program" (ELCAP), this effort endeavors to acquire empirical measurements of hourly electrical usage and major determinants in order to advance the understanding of energy requirements and conservation potential in residential and commercial structures in the Pacific Northwest. Funding for this research is provided by the Bonneville Power Administration, building upon the capabilities developed with the support of the U.S. Department of Energy, Office of Buildings and Community Systems. Pacific Northwest Laboratory (PNL), which is managed by the Battelle Memorial Institute, conducts this work under U.S. Department of Energy contract number DE-AC06-76 RLO-1830.

Metered energy consumption by end use and time of day are typically unavailable for commercial buildings[1]. There is little direct evidence of the relative effect that climate, building structure, operation, and occupancy have upon energy use in buildings, and almost no measured information reveals the interaction of these factors. Architectural design and design tools are consequently based chiefly upon direct application of the laws of physics and component-based algorithms in computerized simulation of building operation. These simulations in turn are generally validated only against monthly utility billings. Actual end-use energy consumption must be collected to understand how commercial buildings really use energy if the design and operation of these buildings for cost-effective energy consumption is ever to become the rule, rather that the exception.

In 1980 the Department of Energy asked PNL to manage a program to collect end-use energy consumption data from a set of restaurants selected by the National Restaurant Association. As the prime contractor, Pennsylvania State University designed and implemented a data acquisition system to Battelle specifications, using commercially available microcomputers, modems, and sensors. The effort resulted in the collection of nearly 90% of available 15- minute data from over 200 sensors monitoring energy use, interior temperatures, and building microclimate during the period July 1, 1983 to June 30, 1984 as described in a comprehensive report dated May 1985.[2]

Although the restaurant energy monitoring was successful, it revealed that significant improvements in data acquisition technology were possible and warranted. Using discretionary funds, Pacific Northwest Laboratory designed and demonstrated a low cost data acquisition system capable of recording and transmitting data from up to 48 digital and 64 analog signals. This system, which includes the necessary signal conditioning for a suite of microclimate sensors, is based upon an eight channel "Wind Prospector" developed by PNL for wind characterization studies. The DOE Office of Buildings and Community Systems provided supplemental funding to develop a low cost watt-hour sensor, a shadow band pyranometer, and an occupancy sensor for deployment in approximately thirty buildings. The Bonneville Power Administration (BPA) ultimately adopted this system to provide energy use measurements from approximately 1000 sites in the Pacific Northwest. The hardware, installation and interrogation protocols are described in the paper by Schuster and Tomich also appearing in these proceedings.

The primary impetus for undertaking this large scale metering effort followed from the Northwest Power Act of 1980, wherein the U.S. Congress empowered a Northwest Power Planning Council to develop and monitor the implementation of a long-range plan for the acquisition of cost-effective electrical resources in the Pacific Northwest. The legislation specifically calls for the identification, assessment, and procurement of cost-effective conservation measures for new and existing buildings. Because this is a new responsibility for the Bonneville Power Administration and regional utilities, there is considerable uncertainty regarding several key issues surrounding load forecasting, conservation assessment, and evaluation of conservation measures in buildings.

Seattle City Light, the regions largest municipal utility, initiated the Commercial Hourly End-Use Study (CHEUS) in 1982 to better understand commercial building energy consumption patterns and conservation

potentials. Eight buildings were outfitted with commercially modified data acquisition systems, data has been acquired for approximately two years, and detailed conservation assessments were carried out using "constrained" DOE-2 simulations. Bonneville provided much of the funding for the initial work, and has recently provided funds to install and monitor the effectiveness of cost-effective energy conservation measures.

In December of 1983 two of these sites were outfitted with PNL data acquisition systems to provide a side by side comparison of the measurements made by the data logging equipment. The measurements were replicated, and compared at the end of a coinstrumentation period. This test, which is described in an ELCAP report[3] indicated that the PNL data acquisition system was the most suitable for this application. I should mention that one reason for the concentration of ELCAP sites in Seattle is the degree of interest and experience on the part of Seattle City Light staff and contractors with respect to commercial building monitoring.

Following this introduction, the paper describes the goals of the measurement activity and the project scope with respect to commercial buildings. The project also entails measurements from over five hundred residences, however space limitations preclude detailed discussion here. The preliminary data analysis efforts are then described as well as the generic approach to more detailed analysis. The paper concludes with a discussion of the step by step process developed for the preparation of measurement plans.

Project Goals

The ELCAP studies provide an unprecedented opportunity to advance the state-of-the-art of utility load forecasting and energy conservation assessment for commercial buildings. This understanding is important to BPA for several reasons:

1. commercial buildings firm electric loads in the BPA service area totaled 3,191 average megawatts in 1984

2. commercial loads in the year 2005 are forecasted to be as high as 6,460 average megawatts

3. an estimated 660 average megawatts can be cost effectively conserved in regional commercial buildings over the next 20 years

4. the Northwest Power Act places priority upon acquisition of these cost-effective conservation resources

5. the Northwest Power Planning Council Two-Year Action Plan calls for BPA to develop the capability to procure conservation resources when needed.[4]

The responsibility to explicitly identify and procure cost-effective conservation measures is a new one for BPA and regional utilities, and, hence, there is considerable uncertainty regarding several key issues. These include:

1. how large are the energy requirements of various building types?

2. how large are the conservation potentials at various levelized costs?

3. how can conservation resources best be identified and assessed?

4. how can conservation resources best be implemented and reliably maintained?

5. what are the impacts of energy conservation measures on utility load shapes?

6. what are the interactions of conservation measures on end-use loads?

7. how can new buildings be constructed to use energy more efficiently?

8. how can existing buildings be retrofitted or controlled to reliably use less energy?

9. to what extent will electrical energy conservation affect fossil or renewable energy requirements of buildings?

10. to what degree do conservation measures degrade over time and what is the lead time requirement to procure them?

11. to what extent will conservation measures be implemented without utility programs and how can adoption rates be affected by utility programs?

The ELCAP efforts are organized to address most, if not all, of these questions. Some can only be answered after several years of study, while others require that other efforts culminate prior to approaching them.

Three overall objectives of the research are highlighted below. These are: 1) resource characterization, 2) conservation measure specification, and 3) conservation resource acquisition and evaluation.

Resource Characterization

Presently, electrical requirements of commercial buildings are not well understood at the end-use level or with respect to time of day. Furthermore, the interaction of the various end-use loads (such as lighting and space heating) are virtually unknown except from first principles. Perhaps the most direct application of ELCAP measurements is to rectify this weakness by compiling empirical evidence of known and verified accuracy for a large number of structures.

A common and comprehensive measurement protocol is being applied to all commercial buildings monitored for ELCAP, segregating loads into 20 categories of use. These categories are space heating, space cooling, ventilation, mixed HVAC, interior lighting, exterior lighting, refrigeration, hot water, receptacles, vertical transport, food preparation, material handling, data processing, recreation, sanitation, lab equipment, shop equipment, specialty equipment, mixed general, and unknown. Consequently, there should be good comparability with respect to the basic measurements among the various monitored commercial sites.

The distribution of monitored sites for the Base study was set in proportion to an estimate of region-wide electrical shares among 10 commercial building categories. These categories are office, dry-good retail, grocery, restaurant, warehouse, lodging, health, schools, universities, and other. The sample is further sorted by two age groups (30 post-1980 construction, the rest pre-) and small, large, and very large size. The sample design is described in an ELCAP report[5].

Ultimately, the data base will support investigating typical energy consumption patterns and magnitudes among various building subsets. For example, one can prepare an average lighting profile for new office buildings as well as confidence bands. Lighting loads can be compared for various buildings by calculating lighting density (watts per square foot). Once this information is computed, an analyst can more reliably predict the energy savings potential of lighting retrofits in office buildings.

Energy use indexes (EUIs) are expressions of the intensity of end-use loads on a use per square foot basis. The indexes form the basis for utility load forecasting models by multiplying them times the square feet of a commercial building of that type predicted for a particular year using engineering and econometric models. EUIs are needed for each of the major end-uses and building types. The types not only include the categories identified above, but also several status types as follows:

- buildings as they presently exist
- buildings as they might be retrofitted with conservation measures
- typical new building construction practice
- new buildings constructed for exemplary energy efficiency.

As well as summarizing the measurements according to the various commercial building cells and calculating variances, characterization also entails the study of key determinants of energy use such as climate, occupancy levels, integrity of the building shell, and efficiency of the HVAC systems. Based upon the measurements, empirical relationships can be tested to determine the best methods to predict energy needs. These relationships can provide the basis for models which stand alone or be integrated into larger system models to predict overall utility system loads.

Another valuable application of data characterizing the commercial building stock is the evaluation of existing building energy simulation models. Models can be initialized either with or without the metered data and evaluated with respect to their ability to predict future electrical use. The models form the basis by which energy conservation measure performance is estimated in order to determine the most cost-effective mix of conservation strategies to be implemented at a particular building. Presently, these tools are used without any robust assurance that the end-use splits are correct, that the use profiles are reasonable, or the interactions among end-uses are properly handled. This should no longer be the case once measured energy performance data by end use is available from ELCAP.

Conservation Measure Specification

The first objective provides an indication of where energy is consumed in the commercial sector, and what the primary determinants of energy consumption are. The objective of conservation measure specifications is to identify and specify cost-effective conservation opportunities for individual structures. This is typically accomplished through the collection of building characteristics data, the application of professional judgement and/or simulation models, and the preparation of a report outlining the conservation opportunities, costs, and likely energy savings.

There is, at present, a wide variety of models, and no consensus with respect to which models or auditing approaches are the most accurate. This is, in large part, due to the fact that there is a limited empirical basis for evaluating the techniques. ELCAP can provide such a basis wherein predictive techniques can be compared at the end-use and hourly levels with actual energy use. An important result of such demonstrations is the building of credibility in model predictions which can reduce the risks associated with major investments in energy conservation measures.

Through application of these techniques for a large number of structures, sources of energy savings in commercial buildings can be identified and banked upon for future acquisition if and when needed. Techniques to specify conservation measures based upon characteristics data, limited energy use measurements, and use of calibrated computer simulations can be evaluated with ELCAP measurements as a reference.

Conservation Resource Acquisition and Evaluation

The third objective is to develop and evaluate programs to procure energy conservation measures in commercial buildings. This includes evaluations of the accuracy of energy savings predictions, study of the longevity and interaction of energy conservation measures, and the cost effectiveness of programs to provide incentives for conservation measure implementation. ELCAP measurements can provide empirical evidence of these factors in selected buildings as well as in a generic sense across buildings.

To respond to these topics, it is important to document the characteristics of the buildings under examination and the alterations made to them in order to save energy. It is important to assure that other determinants of energy consumption are monitored before, during, and after the changes to be sure the impacts on energy use are attributable to the action in question. Hence, tracking of activity levels, climate conditions, and building operations are important components of such investigations.

With respect to the longevity of energy savings, monitoring should continue over a span of many years while limiting subsequent changes to the building. In this way, reductions in energy savings can be associated with the degradation of particular measures. With respect to the cost effectiveness of programs to provide incentives for the implementation of energy conservation strategies, it will be important to compare the actions and energy savings of program participants against a control group of unaffected buildings.

Project Scope

The scope of the ELCAP activities has broadened as early data products and research insights have been applied to various questions posed by the Power Planning Council and BPA. Presently, three commercial building studies are underway, and two others are in the planning stages. The three underway are: 1) the Base Study, 2) the Commercial Audit Program Evaluation, and 3) The Purchase of Energy Savings Program Evaluation. The base study is essentially a control group of 30 new and 170 existing buildings which are randomly selected from the general population of buildings in Seattle Washington. The 34 Commercial Audit Program sites were arbitrarily selected from approximately 4000 sites in the Northwest which have participated in that program where building energy use is estimated by private contractors and potential energy conservation opportunities are identified. The 20 Purchase of Energy Savings Program sites are all the buildings participating in the first round of the Bonneville program to provide financial incentives for the implementation of energy saving measures in commercial buildings throughout the Pacific Northwest. Studies in the planning stages include the Institutional Building Program and the New Commercial Building Field Test.

The measurements taken at a particular site are identified in a measurement plan customized to the site in accordance to generic criteria. These criteria require that energy consumption for heating, ventilation, and air conditioning be separated from lighting energy, and process energy requirements. Within a particular structure, it is also necessary to isolate energy use by tenants with different economic activities (ie retail, office, warehouse). Finally, for those sites which use fossil fuels, electric load proxies such as furnace fans, and fuel pumps are metered individually to provide an indication of the on-time since funds are not available to measure fossil fuels directly.

In addition to energy use measurements, each site is outfitted with at least one interior temperature sensor. This sensor is installed adjacent to the HVAC control thermostat where possible. Exterior climate conditions are measured at approximately eighty sites throughout the Pacific Northwest in such a way as to characterize regional

building microclimatic conditions. These weather stations measure exterior temperature, horizonal global radiation, wind speed and direction. Direct and diffuse radiation will be measured at approximately five sites using a PNL design shadow band pyranometer.

A building characteristics survey is completed for all monitored commercial sites which documents information regarding the construction, equipment, occupancy and operation of the building. Extracts of this information are encoded into the characteristics data base to permit automated error checking, sorting, and summarization. This characteristics survey is supplemental to other programmatic auditing for the Purchase of Energy Savings and Commercial Audit Programs.

An important set of protocols has been established to assure the quality and reasonableness of measurements and documentation. This exercise is essential to archive data of known and verified accuracy. There are two basic checks made in an automated fashion as data is introduced to the archive. The first of these is a robust sum-check, wherein redundant measurements are compared. This is typically accomplished by measuring both the energy supplied to and from electrical service panels and comparing the sum of the distribution circuits to the panel feeds. The second check is a reasonableness check, wherein an analyst examines the building characteristics survey, develops expectations with respect the profile and magnitude of end use loads and subsequently compares these expectations with the measurements. Any deviation from expectations are explained prior to bringing the site on-line. The potential for a fully automated expert system to conduct the labor intensive and repetitive verification chores is being actively investigated.

Data Analysis

The analysis of ELCAP data has two interrelated foci. First, there are those analyses that are designed to address the programmatic requirements of various efforts at BPA. These analyses can be directed to fairly specific objectives that have roots in equally specific policy issues. The second course of analysis is the exploratory analysis that is, of necessity, part of any data collection effort. The exploratory analyses are usually directed at developing an understanding of the strengths and limitations of the data set. These analyses give us insight into new or unexpected results that may be found in the data. For a data set such as that produced under ELCAP, the size and detail of which is unprecedented, the probability that the exploratory analysis phase may yield new and exciting results is quite high.

The first steps in early data analysis should be quite general. As outlined below, they will serve to identify the data sets available for various analysis efforts and set the stage for subsequent work with the data. There are three steps involved in this early analytical work: data identification, data examination, and basic end-use disaggregation.

Data Identification and Examination

The first step in preparing for analysis of early ELCAP data will be the identification of data sets pertinent to proposed investigations. This is to be done by carrying out a number of simple steps, as follows:

1. examine time series plots of end-use and meteorological data for the on-line ELCAP structures, noting any unusual features that may indicate data quality problems, unusual occupancy patterns, or other idiosyncracies.

2. prepare summaries of the ELCAP data, including information regarding distribution of the sites across the sample selection variables and the availability of pure and mixed end-uses

3. identify sites suitable for use in other studies on the basis of end-use availability, data availability (considering both starting date and the occurrence of holes in the engineering data), and sample selection variables

4. create hypotheses concerning the patterns and magnitude of electricity consumption for various building types and end-uses and identify apparent relations for later investigation.

At the conclusion of this step, more detailed planning of early work can be executed. The result of this procedure will be a detailed summary of the early ELCAP data, which will be of value in evaluating project protocols as well as planning analysis work. Aspects of the project which may benefit from this work include data verification, instrumentation protocol, and software development.

Basic End-Use Disaggregation

After visual examination of the data, the next step is the statistical description of the end-use load shapes. This involves the characterization of end-use load shapes for

various structures. This characterization will involve the computation of a number of simple statistical measures of the magnitude and variability of the various end-use loads. Quantities to be computed include:

- means and standard deviations of daily and weekly total power consumption of various end uses for single buildings and selected sets of buildings

- mathematical measures of shape for the load profiles for single buildings and sets of buildings, such as the first few moments of the profiles or the coefficients in a spectral decomposition of the profiles

- measures of the variability of these quantities, both for single buildings and within sets of buildings. In this regard, it may prove useful to generate a set of empirical orthogonal functions in which the load shapes may be expanded. Comparison of load shapes between pairs or sets of buildings can then be made on the basis of the coefficients in these expansions.

These results will be useful in investigating several questions, including:

- What is the total consumption and demand of the various end-use loads for the available buildings?

- Which load shapes are reasonably consistent across the sample, and which are highly variable?

- What is the degree of variability in load shapes for individual end-uses for a given building?

Simple results of this sort are likely to be of broad interest as it precisely measures the magnitude and variability of end-use load shapes that are either required as input to or are the results from a variety of electric load models. These quantities are also required for estimating the conservation resource.

In addition to its own intrinsic value, information of this type is necessary in determining whether the available data sets are sufficiently large to permit sensible attacks on various analysis questions. With some information on the statistics of the load shapes, estimates can be made of the precision obtainable by applying various analysis techniques. Such estimates are an important part of planning subsequent analyses.

This activity of simple data examination is one which will continue throughout the analysis phase. The ELCAP data base is a dynamic, continually-growing body of information and the benefits of the activities described here are not limited to the earliest data.

Planning of Subsequent Analyses

Upon completing the initial data analysis, a broader understanding of the nature of the data will enhance planning for subsequent analyses. Data sets suitable to various inquiries will have been identified and most data irregularities will have been detected. A portion of the useful data will have been characterized in general terms. With this necessary information in hand, detailed planning of subsequent analyses can proceed.

A planning exercise will be carried out before detailed analytical work begins. This planning exercise will incorporate the following steps:

1. determination of explicit objectives for the particular analysis

2. selection of techniques for carrying out the analysis, with consideration given to limitations imposed by data quality, data availability, and computational resources

3. preparation of a project plan for the particular analysis

4. review of the plan by PNL and BPA staff and such external reviewers as may be appropriate for technical quality and pertinence to project goals.

Measurement Plan Process

To assure the relevance and completeness of data collection it is necessary to develop and implement a comprehensive and consistent set of measurement guidelines. The development of these guidelines (called Measurement Plans) for ELCAP's Commercial Building Study follows from an overall assessment of the study's objectives and resources, with consideration of the costs and merits of particular measurement approaches.

Since experience with the collection of actual energy performance data from commercial buildings is limited to date, the procedures for developing the Measurement Plan were evaluated in a set of pilot buildings before they were finalized. The detailed procedures and guidelines employed are presented in the ELCAP Commercial Study Handbook Three entitled, Measurement Plan Development, to be published later.

The purpose of the Measurement Plan is to consistently and unambiguously identify and classify end-use loads to be monitored. This is difficult for commercial buildings because of their complexity, variety, and typically poor electrical service documentation. Nonetheless, in order to compare the energy performance of different buildings and conduct routine analyses, systematic measurement protocols and documentation procedures are essential.

Development of the Measurement Plan, as devised for the full sample study, comprises the following major steps, which are briefly described below:

1. Conduct initial site survey
2. Prepare electric service riser diagrams
3. Conduct connected load survey
4. Complete panel documentation forms
5. Determine sensor requirements
6. Make channel assignments
7. Complete channel information forms
8. Prepare channel formulations

Initial Site Survey: Arrangements are made for the installation contractor to tour the building with the building's contact person. The purpose of this visit is to identify barriers to equipment installation, assess the degree of end-use and zonal isolation, and estimate the hardware, labor, and cost requirements. Each electric panel is examined and a preliminary judgement of the number of sensors needed to monitor it is made. Project staff reviews this information to determine, how, or whether, to proceed with the site.

Riser Diagram: Based upon the initial site survey, an electric service riser diagram is prepared which identifies the type of utility service at the site and the layout of the distribution system. This diagram helps to determine the scale and complexity of the resultant Measurement Plan and to assure that all electric usage at the building is accounted for.

Connected Load Survey: This procedure is part of the Building Characteristics Survey. All major electric loads are classified using a growing taxonomy of building equipment according to their end-use and electrical circuitry. In this way the loads on every logger channel are unambiguously classified through association with the panel documentation forms.

Panel Documentation: Each electric panel is documented using a panel documentation form. This form identifies the loads on each phase of electric service for each circuit. As the Measurement Plan progresses, the end-use categories, building use zones, logger channels, and one-time load measurements are entered on these forms.

Current Transformer (CT) Requirements: The number of current transformers (CTs) necessary to monitor the various end-use loads is determined by examining the panel documentation forms in conjunction with the Measurement Plan criteria. The number of sensors for each panel is estimated first and summed to give the greatest data resolution. If the number of CTs desired exceeds the limits of the logger, we then decide which, if any, of the sensors are unnecessary, whether wiring CTs in series is feasible, or whether the site deserves more than one data logger.

Channel Assignments: Once the number of CTs is determined, it is necessary to associate the various circuits with individual logger channels. This is done by assigning circuits of identical end-use and electrical phase into one logger channel for individual panels. Additional channels are required to meter control totals (mains) so that the performance of the equipment can be verified, and assure all loads are metered, through the use of sum-checks.

Channel Information: Each logger channel requires specific information to set the parameters for interrogation of the logger and conversion to engineering units. The type of CT is identified, its scaling and calibration factors are determined, the load is described according to its end-use, zone, and features, and specific comments are noted.

Channel Formulation: The final step in the Measurement Plan is to recalculate the formulas which determine end-use loads by building zone. This is done by noting the channels dedicated to each of the 20 end-use categories identified. Also, the formulas used to initialize the sum-check programs are calculated by examination of the panel documentation forms.

Conclusions

Large scale field data acquisition projects show great promise for improving the understanding of energy use and conservation potential in commercial buildings. The scale is necessary due to the diversity of commercial building uses, energy loads, and their driving functions. In order to accurately estimate aggregate commercial sector loads and conservation potentials, study of a large number of randomly selected sites is desireable.

Economies of scale are possible in efforts of this type so long as consistent and comprehensive protocols are applied such that sites are not individual case studies. Common measurement protocols, installation and interrogation procedures, and data structures facilitate the orderly implementation and study of metering programs. This is a particularly challenging endeavor for commercial buildings, owing to their individuality and diversity.

Once such standard data structures are established, the design and application of automated data processing, verification, and analysis systems can proceed in a streamlined fashion. Important decisions regarding the computational environment, software products, and user support must be made early in the design stage to organize efforts along parallel paths.

Verification and Quality Control are vital components of large scale metering programs. Data must be scrutinized as it is introduced to the archive to assure data integrity. Specific checks should be made of the sensor calibration, accuracy of time stamps, and the continuity and reasonableness of data to be archived. Without routine verification, an analyst is severely limited with respect to defensible insights and general comfort with the data base.

In any large scale measurement program it is important to plan for a myriad of contingencies ranging from gaining access to the building, to preparation of final reports. Planners should be careful to recognize that these exercises are very involved, and failure of a single component can delay the entire effort. Critical path forecasting is useful to identify those components in need of most immediate attention, so that the implications of any delays can be assessed and corrective action taken at the earliest possible time.

Finally, large scale metering programs should include a pilot phase, where site selection, measurement plan, installation, interrogation, data processing, data verification, ancillary data collection, and data analysis activities can be tested and evaluated prior to full scale efforts. Often, the strengths, limitations, schedule, and budget of the measurement program cannot be accurately assessed until such a pilot phase is complete. Once full scale effort is underway, routine tracking of progress, problems, and expenses is vital to assure data quality, institutionalize learning experiences, assure adequate funding for a properly balanced program.

References

1. Heidell, James et al. March 1985. Commercial Building End-Use Metering Inventory. Pacific Northwest Laboratory. PNL-5027. Richland, Washington.

2. Claar, Charles et al. May 1985. The Project on Restaurant Energy Performance --End-Use Monitoring and Analysis. Pacific Northwest Laboratory. PNL-5462. Richland, Washington.

3. Fishbaugher, Mark. May 1985. End-Use Load and Conservation Assessment Program: Coinstumentation Test of Two Microcomputer-Based Energy Monitoring Systems. Bonneville Power Administration. DOE/BPA 13795-2. Portland, Oregon.

4. Northwest Power Planning Council. April 1983. Northwest Conservation and Electric Power Plan. Portland, Oregon.

5. Baker, Michael. April 1984. Commercial Sector Sample Design for the End-Use Load and Conservation Assessment Program. Bonneville Power Administration. DOE/BPA 13795-1. Portland, Oregon.

Session II

INSTRUMENTATION AND SENSOR INTERFACING

Measurement of Temperature, Humidity, and Fluid Flow

C. Warren Hurley
National Bureau of Standards
Gaithersburg, Maryland

Introduction

Laboratory and field experience, and surveys, have clearly indicated that computerized laboratory and field tests and HVAC installations enhanced with Energy Management and Control Systems (EMCS) often experience problems related to the accuracy and reliability of the system instrumentation. These problems most frequently result from a lack of understanding of fundamental engineering characteristics of the instrumentation pertinent to the environment of the test area. Also, the connection of instrumentation to a computer controlled system such as a DAS or an EMCS require interfacing techniques that are frequently neglected or erroneously applied.

This paper is being presented to call to your attention only a few of the many neglected characteristics of instrumentation used in EMCS that have been found in the field to be the basic cause of problems in EMCS in new and existing installations. The characteristics of some of the available temperature, moisture, and flow monitoring instrumentation pertaining to EMCS application will be presented followed by typical problems encountered in interfacing various monitoring and control instrumentation with computer controlled systems.

The performance of temperature, moisture, flow, and other monitoring and controlling devices in an EMCS is a strong function of the selection, installation, calibration, and maintenance practices.

Definitions of Calibration and Standard

The term "calibration" as used throughout this paper refers to the comparison of an indicated value of a monitoring system or any part thereof, to the value indicated by a "standard" device or a standard method of generating a reference value. The calibration must also account for all parameters which affect the final indication.

A "standard" is understood to be an instrument whose indications and accuracies within the ranges it is being used have been determined and recorded by a qualified laboratory. A standard may also be a technique which produces a particular value within known error bounds. An example would be the melting point of ice or boiling point of water of known purity for temperature reference standards.

For the purpose of this paper, it must be emphasized at this point that there is an <u>important difference</u> between maintenance of equipment and calibration of equipment. <u>Maintenance</u> of equipment involves the tasks of keeping the equipment running, while <u>calibration</u> of the same equipment involves determining how well the equipment is doing its job. The "end-to-end" accuracies must always be included in any calibration process. The term end-to-end refers to the value determined by the standard at the points of interest to the readout of the instrument at the computer.

Temperature

The measurement and control of the temperatures of various components and fluids in the mechanical systems serving a building and of the air within the various areas of that building are often considered to be simple tasks. As a result, accurate temperature measurements are often neglected in an EMCS. However, the laws of thermodynamics demand careful control of the temperatures in both heating and cooling systems if the equipment is expected to operate at optimum efficiencies. Also, human nature demands that the temperature

DISCLAIMER: The generic methods of humidity measurement described in this paper do not imply the endorsement of any commercial product.

of the air in areas where people are working be maintained within a comfortable range to allow them to function with optimum efficiency.

Factors to be Considered

Reference 1 points out many factors that are pertinent in the selection, installation, calibration and maintenance of temperature sensors. This subsection will list a few items that are often overlooked by personnel performing the task of "determining how well the equipment is doing its job"; i.e., calibration of temperature sensors.

Many Energy Management and Control Systems are installed in existing mechanical systems of buildings. Some of these mechanical systems may have been in service for many years. The person designing the EMCS will often be working from drawings of the mechanical system as it was originally designed, or was installed, or was intended to be installed. Unfortunately, very few mechanical systems are installed exactly as originally designed. Obstacles are frequently generated during the construction phase of a building which require revisions of the original design. Even if the working drawings were revised to reflect the changes in the original design, the majority of drawings available will not reflect the modifications that have been made in the mechanical system since its original installation.

This unfortunate (but typical) fact must be considered by those performing the calibration of the EMCS. Unless all sensors are properly placed in the mechanical system, the EMCS cannot function as designed. Checking the location and method of installation of sensors is part of the task of calibration. If additional branch lines or ducts have been added to an air system upstream of the temperature sensor and the sensor is assumed to reflect the temperature of the supply air stream, the person responsible for the calibration should record the modification and compare the temperature at the sensor with the actual temperature of the supply air.

This same example can be used to point out another typical error made in the installation of sensors. If the sensor is intended to monitor the temperature of the air flowing in the duct, does the cold (or hot) surface of the duct on which the sensor is mounted affect the output of the sensor?

Another item that is frequently overlooked in the mounting of sensors and the use of standards for calibration is the thermal conductivity of the materials used. For example, heat can be either carried to or from the bulb by the stem of a liquid-in-glass thermometer being used as a standard for calibration. References 1 and 2 present further information on this area and other factors involved in remote sensing systems.

Description of Various Temperature Sensors

In this section typical temperature sensing devices used in EMCS temperature monitoring systems will be described. Some of the fundamentals of operation, typical ranges, expected accuracy, precision, time constants, recommended areas of application, advantages, disadvantages, etc. are listed for each type described.

Resistance Temperature Detectors (RTDs)

A resistance temperature detector (RTD) operates on the principle of a change in its electrical resistance as a function of temperature. In general, the resistivity of all metals increases with an increase in temperature and yields a positive resistance-temperature coefficient.[2,3] Platinum, copper, and nickel are the typical metals used for RTDs. The resistance/temperature curves for these three metals are shown in figure 1. Platinum is the most desirable for use as a sensor in EMCS because of the linearity of the resistance/temperature coefficient.

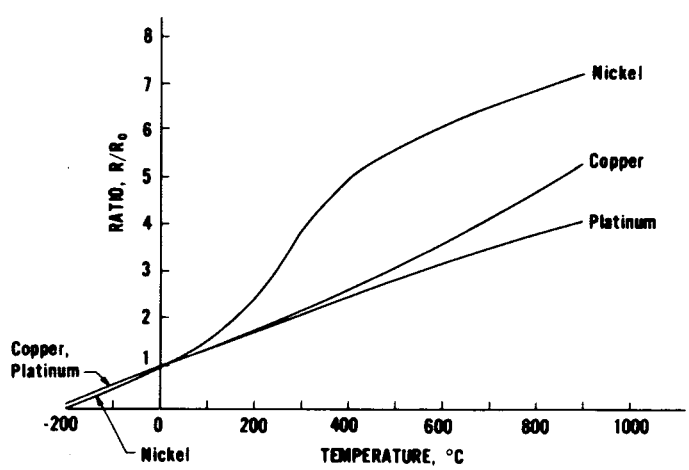

Figure 1. Resistance/temperature curves for nickel, copper and platinum. The ordinate R/R_0, represents the ratio of the resistances of the three metals at various temperatures to the resistances at 32°F (0°C)

RTDs aceptable as sensors for EMCS installation and standards are made by winding very pure (usually 99.99 percent), annealed platinum wire about a strain-free core usually made from ceramic or glass. This assembly is then hermetically sealed in a ceramic or glass capsule. RTDs are made with two, three or four leads, depending upon the desire for temperature measurements independent of changes in the electrical resistance of the leads. The encapsulated assembly is often mounted in a stainless steel sheath to provide protection

against moisture, shock, and the medium being monitored.

Open-type RTDs expose the resistance winding directly to the fluid being monitored and give a faster response. However, the fluid must be noncorrosive: a fluid that seldom exists in EMCS.

The most sensitive areas in the installation and calibration of the RTD are changes in the resistance of the lead wires caused by temperature variations and variations in contact resistance. In operation, the RTD is generally electrically mounted as one leg of an electrical resistance bridge. The bridge circuit can be operated in either a null or deflection mode. For EMCS measurements, the deflection mode is generally used. However, when the RTD is being used as a standard, the null mode is often preferred. If the null method is used in a simple bridge circuit such as that shown in figure 2(a), the resistor R_4 is varied until the bridge is balanced. The value of R_4 is the same as that of R_3 excluding all errors. The bridge circuit shown in figure 2(b) is useful for measurements of high accuracy since the contact resistance of the variable resistor does not influence the resistance of the bridge legs. If the leads from the RTD are long and are subjected to varying temperatures, the bridge circuit shown in figure 2(c) is recommended. Errors caused by the resistance changes in the legs will cancel since one of these leads is in each of the bridge legs R_2 and R_3. The effect of a resistance change in the third lead is negligible if the indicating instrument requires minimal current for operation. After proper calibration, the circuits shown in figures 2(b) and (c) can be used in the deflection mode. These circuits are useful in the null mode when being used as a standard for detecting a given temperature (as opposed to detecting a range of temperatures).

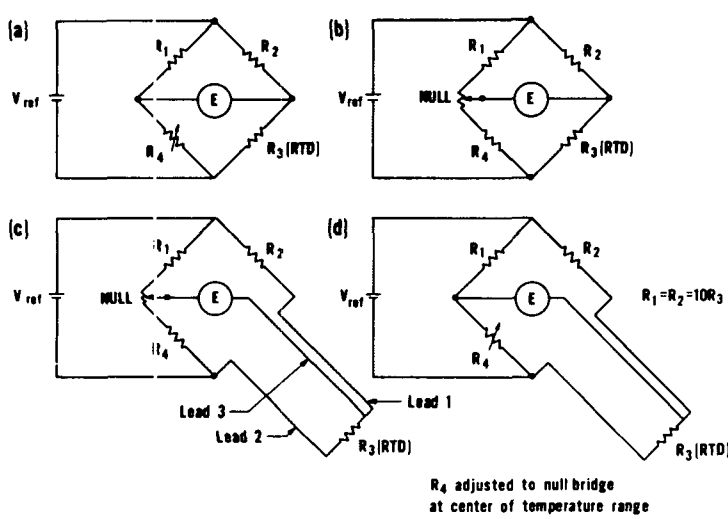

Figure 2. Various bridge circuits used for resistance temperature detectors (RTDs)

The circuit in figure 2(d) is shown to emphasize that when $R_1 = R_2 > 10R_3$, good linearity of the RTD can be obtained if the bridge is balanced with R_4 at the middle of the temperature range. A typical platinum RTD with a 100 ohm nominal resistance, will vary approximately 20 ohms over its operating range in an EMCS. If the legs of the bridge were of equal value, severe nonlinearity would occur. The higher values of R_1 and R_2 greatly reduce this problem area and offer a bridge circuit with good performance.

Measurements made by the RTD sensor or standard using different currents will show the presence of the self-heating error. Off-on measurements will give an indication of the time response. Other ambient conditions to consider include the presence of electromagnetic fields from inductors, high-current power lines or rectifiers; unwanted sources of heat near the installation; frayed insulation on the leads; and internal inhomogeneities in the medium being monitored.

The response time of a RTD which has been hermetically sealed (without sheath) is approximately one second in flowing water and two seconds in moving air. These are 90 percent response times. The addition of the stainless steel sheath will, of course, increase these response times depending upon the design of the sheath and the medium being monitored. The self-heating error in the hermetically sealed RTD is less than 0.1°C/mW in moving air (v=1 m/s), and less than 0.25°C/mW in still air.

The name of the precious metal, platinum, has a tendency to frighten designers, engineers, and EMCS management personnel away from considering the RTD as a sensor or a standard. However, the price of a platinum RTD hermetically sealed in ceramic or glass is generally less than that of a certified liquid-in-glass thermometer. The cost of a platinum RTD mounted in a stainless steel sheath is in the same price range as that of a certified liquid-in-glass thermometer.

Thermistors

Commercially available thermistors usually are fabricated in forms of beads, discs, rods or flakes. With the exception of the bead type, they are generally composed of sintered particles of metal oxides bound between two conductive surfaces with lead wires attached. In the bead type, the lead wires are embedded in the oxide. The oxides of nickel, manganese, iron, cobalt, copper, magnesium, titanium, and other metals are used. Thermistors differ from RTDs in several fundamental ways. First, a thermistor usually has a high initial resistance (1,000 - 10,000 ohms) relative to the low resistance of the RTD. Because of the

higher initial resistance, the resistance of the lead wires is usually negligible. Second, thermistors generally possess a relatively large negative resistance/temperature coefficient. Some thermistors possess a positive resistance/temperature coefficient and are generally used for switching, not temperature measurement.[1] A third difference is that the resistance-temperature relationship of a single thermistor is very non-linear as shown in figure 3. The fourth major difference is that the thermistor resistance varies inversely with the applied voltage since the resistance is decreasing with temperature instead of increasing as it does with the RTD.

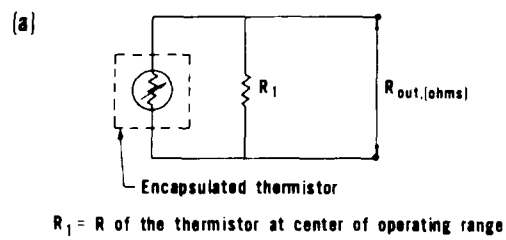

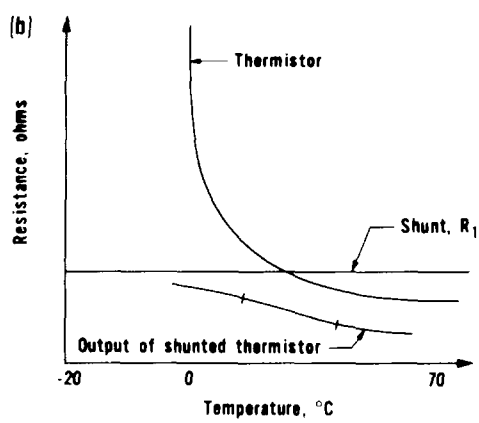

Figure 3. a) Schematic diagram of a single element thermistor shunted by resistor R_1. b) Resistance versus temperature diagram

There are several recommendations for thermistors which are to be used in EMCS. First, the thermistor must be hermetically sealed to prevent the deterioration of the oxides from the typical environments of EMCS. Thermistors encapsulated in ceramic materials are not recommended for direct immersion in liquids, especially water found in EMCS environments. Second, two or more oxides separately encapsulated within an outer seal and utilizing specified related components to complete the bridge circuit should be used to produce a linear output within an acceptable range for EMCS. Figure 4 displays some typical circuits used for linearized thermistors. Figure 4(a) represents a dual-element thermistor from which a positive or negative temperature/voltage output can be obtained. Figure 4(b) represents a more practical circuit for EMCS using the same thermistor. The leads

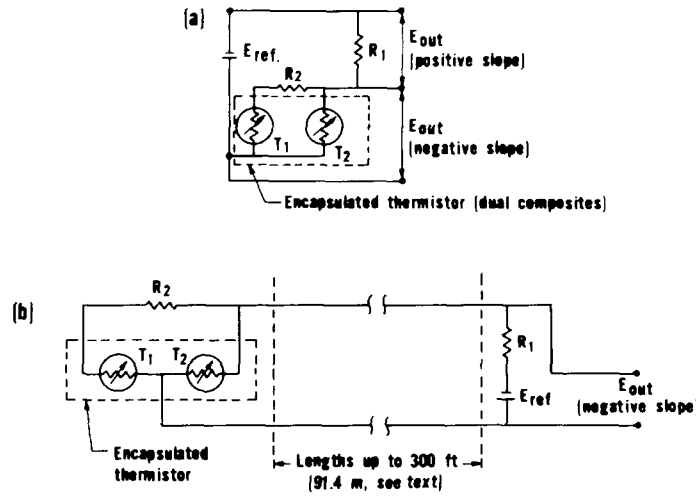

Figure 4. Typical bridge circuits for linearized thermistors. a) a circuit for obtaining positive or negative coefficients at local sensor stations. b) a typical circuit for EMCS where the output is desired at distant stations

shown in the figure can be as long as 300 ft (91 m) for temperature ranges from 32°F (0°C) to 100°F (37.8°C). By extending the upper end of the range to 212°F (100°C), the length of the leads must be limited to 100 ft (30.5 m) to retain the specified linearity. One restriction in using a typical dual-element thermistor in this fashion is that the resistor R_2 must remain close to the environment of the thermistor. The linear deviation of available dual units such as shown in figure 4 is approximately ±0.4°F (0.2°C) over the specified range. The error introduced by interchanging the components (R_1, R_2, and the thermistor) which are supplied by the manufacturer is approximately ±0.27°F (0.15°C). Currently-available thermistors made from three elements and using their respective resistors are linear within ±0.09°F (0.05°C) over an operating range of 0°C to 100°C.

Several additional factors should be noted in the application and calibration of thermistors. One of the most important factors is the power dissipation constant (i.e. power in mW required to raise a thermistor 1°C above the surrounding temperature). A typical thermistor suspended by its leads in a stirred oil bath has a dissipation constant of 8 mW/°C, or 1 mW/°C in still air. The time constant (i.e., the time required for a thermistor to indicate 63 percent of a change in temperature) is approximately 2.5 seconds in stirred oil and 25 seconds in still air. These factors must be kept in mind during the calibration of any thermistor. Long-term operation at temperatures above those specified for the thermistor will cause the unit to exceed the specified tolerances.

Linearized thermistors operating in a self-heated mode can be a problem in calibration. If

the applied voltage is not adequate, the medium being monitored will dissipate the thermal energy faster than it is supplied. In this case, the thermistor will not produce an output meeting the manufacturers' specifications. In each case, the reference potential should be computed as recommended by the manufacturer for the medium being monitored.

Simple, hermetically-sealed, single-element thermistors may also be found in EMCS. Such components follow the general non-linearity shown in figure 3. However, by adding a resistor in parallel with the thermistor of a value approximately that of the thermistor at the center of the range in which it is to operate, the extremities of the non-linearity will be greatly reduced. If the range is relatively small (e.g., 20°C) the thermistor will tend to function in a linear fashion as shown in figure 3.

The details of the circuitry in figures 3 and 4 are presented to emphasize one major item related to the calibration of any thermistor. This item is impedance. The impedance of the device being used to measure the resistance or voltage of the sensor during calibration or the input impedance of the amplifier used to amplify and/or condition the signal suitable for EMCS is critical. Although the exact value for this impedance may vary from one manufacturer to another, in general, it will be in the range of ten megohms.

Integrated Circuit Temperature Sensors

Integrated circuit (IC) temperature sensors are available from many manufacturers in different forms. Many of these sensors resemble an integrated circuit chip in the form of a dual-in-line package (usually 8 pins) or a metal can package resembling a transistor. This type of temperature sensor uses the fundamental properties of the silicon transistor.

Several manufacturers produce integrated circuits that are designed to yield approximately 10 mv/°C. These ICs can be biased in one of several ways to function within a desired temperature range from -67°F (-55°C) to 302°F (150°C). The self-heating effect of the excitation current can reduce the specified accuracy significantly. Therefore, the manufacturers' specifications must be followed to apply the lowest current suitable for the application. Manufacturers of these sensors generally recommend from one to 25 typical application circuits including features which make the self-heating error proportional to the absolute temperature. Several IC temperature sensors are available with a reference voltage stabilizer and an operational amplifier. Such units are more expensive. However, the temperature rise of the sensor is only approximately 2°F (1.2°C) in still air from the effects of self-heating. Heat sinks are often used to reduce self-heating effects in moving air.

In general, integrated circuit temperature sensors are satisfactory for a limited number of EMCS applications only if they are properly installed and have been calibrated as specified by the manufacturer. Care must be taken in applying and calibrating such circuits in many EMCS where the environment often changes from a temporary power outage, causing the unit to fall well below the minimum requirements for any EMCS. The particulate matter found in typical EMCS environments is also a negative factor in this type of sensor and the effects of accumulation of this matter must be carefully examined by the person responsible for the calibration. The time constant of sensors of these types is approximately 5 seconds in moving air with no heat sink.

Because of the numerous types, manufacturers, and installation techniques, the methods of calibration are not noted in detail in this paper. The reader is encouraged to contact the manufacturer for calibration details.

Thermoelectric Sensors (Thermocouples)

Advancements in solid state electronics and the demand for more accurate temperature measurements have made thermoelectric sensors more popular in EMCS.

Common thermocouples (T/C) are formed by welding, soldering, or pressing two materials together. The type of T/C to be used in EMCS is determined by several factors. Figure 5 shows the temperature/voltage curves for several of the typical combinations of materials used. Type T (copper-constantan) are used for typical EMCS measurements. Types J and K (iron-constantan and chromel-alumel, respectively) may be found in monitoring

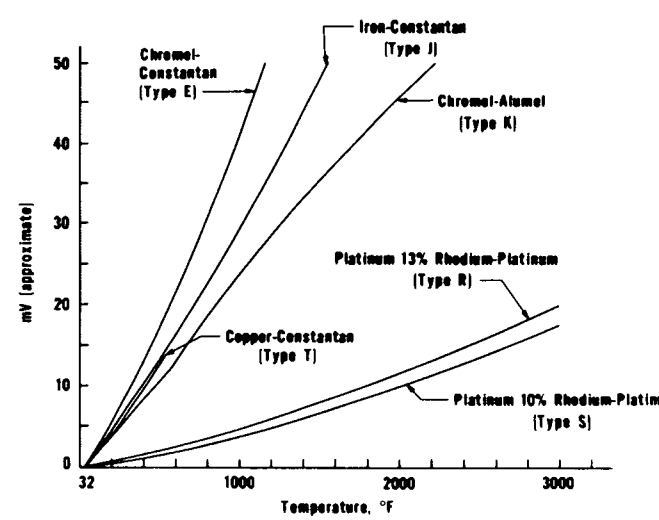

Figure 5. Thermocouple temperature/voltage curves

systems for higher temperatures such as stack temperatures.

A common T/C is normally applied as shown in figure 6. The reference temperature may be produced by an ice bath or a commercially available ice point reference junction system.

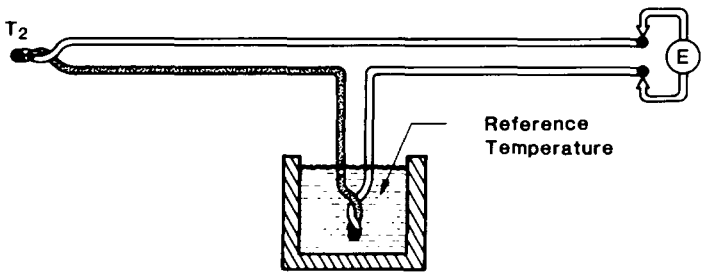

Figure 6. Schematic diagram of a typical single thermocouple circuit with reference junction

Such systems are available with one to fifty or more reference junctions and allow both leads going to the voltmeter or instrumentation amplifier to be of the same material, reducing the possibility of introducing unwanted T/Cs within the leads. Because of the high output impedance of the T/C signal and the relatively low level of the signal, the two leads of each T/C must be maintained in close proximity to avoid the unwanted effects of electromagnetic fields; especially those of 60 Hz power lines and inductive sources. The leads, if separated, will act as an antenna and amplify the noise source. When the leads are maintained in close proximity (electrically insulated from each other), each lead will pick up the same noise signal and the net result will approach zero. This factor is very important during calibration since the leads of a digital voltmeter attached to the T/C junction at the amplifier can produce erroneous results if they are not twisted or bound together to avoid excessive electromagnetic fields from passing between them.

The accuracy of common thermocouples is generally determined in two different ways. If standard thermocouple wire is used which has not been calibrated by the manufacturer, the manufacturers' quality control is the basis for deviations from the published tables. These tables give the average characteristics; not those of a selected batch. In the type T thermocouple, this error is $\pm 0.5\%$ or $\pm 1.5^{\circ}F$ ($0.8^{\circ}C$), whichever is the larger. Greater accuracies are achievable when the individual thermocouples are calibrated. Also thermocouple wire which has been factory calibrated yields a higher degree of accuracy. In general, a maximum deviation of $\pm 1^{\circ}F$ ($0.5^{\circ}C$) at temperatures up to $300^{\circ}F$ ($149^{\circ}C$) can be obtained.

If automatic ice point control references are used, the accuracy of these units must be considered also. Such reference junctions that use the Peltier cooling effect as a refrigerator are available with an accuracy of $\pm 0.05^{\circ}C$.[4] However, the accuracy of typical commercially-available multijunction ice point reference units is better than $\pm 0.25^{\circ}C$.

In-line cold junction reference units which operate from a small "button" battery are less accurate and require additional compensation for ambient temperatures. Such devices are not recommended for EMCS since the battery adds to the task of calibration and the accumulated cost exceeds that of multijunction ice point reference units.

A simple dual-junction thermocouple such as that shown in figure 6 using ice as previously described for a reference bath will make an excellent standard after calibration with a certified standard. Several multijunction, digital-readout units are also available with built-in references. Such units are often used for determining the stratification in a duct of air across a heating or cooling coil. However, units of this type must be carefully calibrated under typical ambient conditions prior to their use as a standard.

The use of a digital voltmeter can induce further errors if the clip-on devices used at the ends of the leads are of different materials and are still further amplified if their temperatures vary. The clip-on devices can be made from any <u>one</u> metal. Although two new thermocouples are added to the circuit, if the temperatures are equal, the net effect will be zero.

The time constants for thermocouples vary from several microseconds to several seconds depending upon the gauge of the wire used to make the thermocouple and the media being monitored. For example, <u>in still air</u> the time constant for 0.001-inch-diameter wire is 0.05 seconds, while for 0.032-inch-diameter wire the time constant is approximately 40 seconds. In air moving at approximately 18 m/s, the time constant is one order of magnitude smaller. In general, the response time is very fast for thermocouples used in EMCS applications.

Thermocouples are frequently used in parallel as "averaging thermocouples." If properly installed, they present an excellent source of measuring the average temperature of a stream of air, surface, etc.[1,2]

Also when used in "series," thermocouples provide a "thermopile" which results in a very good technique of determining the differences in the temperatures of two surfaces, area in an air stream, etc.[1,2]

Humidity

Building energy consumption due to latent heat transfer associated with humidification or dehumidification of air, often represents as much as 30 percent of the total energy being used. An error in the sensor monitoring the moisture content of the air can have a significant impact on the total energy use. Therefore, it is necessary that the devices being used to monitor and control the moisture content of the air be carefully selected, installed and maintained to perform at an acceptable level of accuracy for the building or area being controlled.

Humidity Ratio

The pressure, P, is the absolute pressure of the air being monitored. This equals the sum of the partial pressure of dry air and the partial pressure of water vapor in the mixture.

$$P = P_a + P_w \tag{1}$$

The humidity (mixing) ratio W is defined as the ratio of the mass of water vapor to the mass of dry air, and is given by the equation:

$$W = \frac{0.622P_w}{P - P_w} \tag{2}$$

(See references 5 and 6 for a complete explanation of the reduction of these equations).

Relative Humidity

The relationship of air temperatures to the saturation vapor pressure of water is well known and can be found in references 5, 6, and 7. Assuming ideal gas behavior, the relative humidity, RH, is defined as follows,

$$RH = \frac{P_w}{e(t)} * 100 \text{ percent} \tag{3}$$

where e(t) is the saturation vapor pressure at temperature t.

Dew Point

The maximum amount of moisture which the air can hold is a function of temperature. As a sample of unsaturated air at temperature t is cooled, the maximum possible saturation vapor pressure e(t), is reduced while the actual vapor pressure P_w, will remain unchanged. As the cooling continues, the relative humidity in the air is progressively increased until a temperature t_d, is reached. At that temperature, e(t) is the same as P_w in equation (3) and the air is saturated. The temperature t_d is known as the dew-point temperature (or frost-point temperature if the saturation occurs over ice). At this temperature, the moisture in the air will just begin to condense.

Knowing the condensation temperature t_d, the saturation vapor pressure e(t), may be read from tables of thermodynamic properties of moist air. Since no moisture was added to or taken from the air being monitored during the cooling process, this partial pressure $e(t_d)$, must be the same partial pressure P_w, (not saturated) which was in the air before it was cooled. Thus, from the dew-point temperature one obtains the partial pressure of water vapor and P_w may be used to obtain other humidity units such as the humidity ratio. The relationship among dew point and relative humidity are quickly seen on psychrometric charts.

Relative Humidity Sensors

A limited number of the various types of humidity sensors are described in this paper.

Psychrometer

Psychrometers are a very popular method for determining the relative humidity primarily because of their simplicity and low cost. A typical industrial psychrometer consists of a pair of shielded electrical thermometers (thermistors, thermocouples, or resistance temperature detectors) or liquid-in-glass thermometers, one of which is fitted with a wick. The wick can also be equipped with a water reservoir for maintaining the wick in a wetted condition. A blower aspirates the sensors with the air in which the humidity is to be measured at a rate of not less than 5 m/s to minimize the effect of thermal radiation. This causes the water on the wick to evaporate, thereby reducing the temperature of the moistened temperature sensor. As long as the wick is maintained in a moistened condition, the temperature of the sensor will continue to fall until it reaches a steady-state condition.

The readings from the two temperature sensors are then recorded as the wet-bulb and dry-bulb temperatures. Using tables or a psychrometric chart, the relative humidity, dew-point temperature, humidity ratio, and other characteristics can be determined. Psychrometers of the "sling type" are also used. In the sling psychrometer, the ventilation is accomplished by whirling the instrument by hand.[8]

Although large errors can occur if the wick becomes contaminated or improperly fitted, it can be repaired at minimal cost. The instrument is also accurate to $\pm 0.5^{\circ}C$ over wide temperature ranges providing it is used properly. In ambient air at temperatures up to $100^{\circ}C$, the instrument retains its accuracy. However, as the relative humidity drops to values below 20 percent, cooling the wet bulb to its full depression becomes difficult and the accuracy is seriously impaired unless special measures are taken to provide water to the wick.

In general, the psychrometer is not used for monitoring the humidity in HVAC systems. However, because of its accuracy, portability, and relatively low cost, this instrument is frequently used in checking the calibration of other humidity monitoring devices in HVAC systems. The errors in using a psychrometer are generally caused by human error in reading the thermometers, inadequate ventilation rate, failure to keep the wick properly wet during use, a dirty wick, and the use of water other than clean, distilled water.

Ion Exchange Resin Sensors

An ion exchange resin sensor, more commonly known as the Pope type sensor, is made from polystyrene chemically treated to form a thin layer on the surface of the sensor which is insoluble in water and electrically conductive. The principal difference between the base and the surface layer is that the latter contains polar constituents with electrostatically attached ions that have ion exchange properties. Electrodes are attached to the surface of the resin to form the humidity sensor as shown in figure 7. The ion exchange resin sorbs and desorbs water vapor from the ambient atmosphere until it reaches an equilibrium state with the surrounding relative humidity.

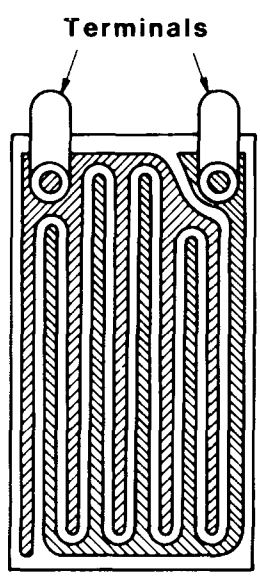

Figure 7. One configuration of the Pope type RH sensor. The terminals are attached to the sectioned areas which are conductive and the plain area represents the activated area

The Pope type sensor is relatively inexpensive. However, the electrical resistance between the electrodes is nonlinear and is temperature dependent. This type sensor is often found in hygrometers monitoring the relative humidity of relatively constant temperature air streams because of its fast response and durability. The non-linearity is often compensated for in the hygrometer which generally uses a Wheatstone bridge with the sensor as one leg. The bridge is generally excited with a 60 Hz AC voltage with zero DC component to avoid a shift in the ionization process. The Pope type sensor is limited to temperatures of less than $75^{\circ}C$ and is highly sensitive to organic solvents (including oil vapor) and ionic-laden liquid (any chemical component that will attack polystyrene).

Jason Hygrometer Sensors

Jason hygrometer sensors are made by forming oxide layers on aluminum. The anodized layers are made porous to offer a large surface area for the sorption of water vapor. The anodized portion of the sensor is generally covered by a very thin film of gold. As the water vapor is absorbed or desorbed from the oxide film (anodized surface), there is a corresponding change in its capacitance and resistance. This property is used in the development of the Jason type hygrometer shown in figure 8.

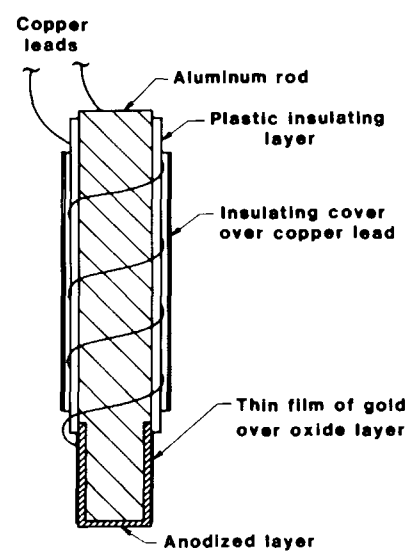

Figure 8. Jason type RH sensor. The thin film of gold is usually chemically or vacuum deposited on the porous oxide layer

The Jason type sensor is almost independent of the temperatures from $0^{\circ}C$ to $80^{\circ}C$. However, the exposure to relative humidities of 90 percent or more for prolonged periods will result in the sensor displaying an irreversible drift. Therefore, its operating range is recommended to be approximately 85 percent relative humidity or less. Contamination of the surface of the sensor by

oil or grease films will interfere with proper performance. These limitations must be considered in using the Jason type sensor in HVAC air streams.

Thin Film Polymer Sensors

Recently, many versions of relative humidity sensors utilizing a thin film polymer or ceramic have been introduced to the field of HVAC. In these types of relative humidity sensors, changes in resistance and/or capacitance occur as the polymer sorbs and desorbs moisture. These sensors are made in many different forms. Some are made with the polymer placed on an alumina substrate for mechanical strength. Generally, the polymer film is sandwiched between two electrodes and as the moisture in the polymer changes, the capacitance between the two electrodes changes as shown in figure 9. This change in capacitance is generally used to change the frequency of a multivibrator and the frequency is converted to voltage or current.

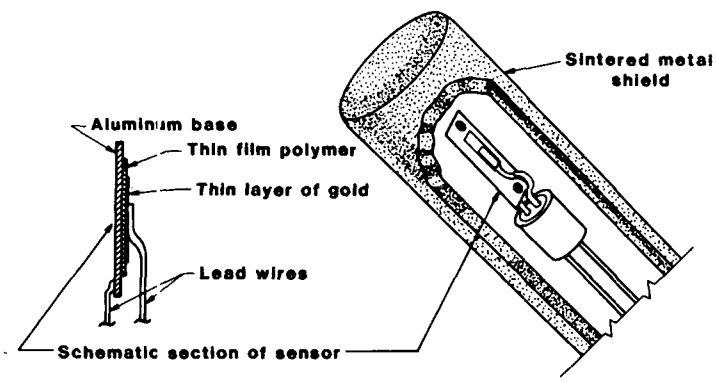

Figure 9. Sketch of a typical thin film type RH sensor

Manufacturers are now offering highly sensitive devices (2 percent RH accuracy) with fast response (time constant 16 s) in the medium to low price range.

Many manufacturers of the thin film polymer sensor offer a sintered metal filter to shield the sensor from the majority of particulate matter found in the air. The operating temperature range is approximately +5°C to +55°C. However, this range will vary from one design to another.

This type of sensor can have poor response, loss of calibration and, sometimes, the actual loss of the sensor itself after exposure to high relative humidities for periods greater than several minutes.

Avoiding the High Humidity Limits of Relative Humidity Sensors

The high humidity operating limit of many relative humidity sensors is a major factor when a selection is being made for use in HVAC installations. First, it restricts these sensors from use in monitoring the relative humidity of the outdoor air. Second, it restricts them from use in the mixed air portion of an air-handler since the mixed air may be at the same conditions as the outdoor air when the outdoor dampers are open. Finally, the use of these sensors is not recommended for direct monitoring of the relative humidity in the supply air stream from an air handler.

The first two restrictions listed above are easy to understand if one reads the manufacturer's instructions and considers the high relative humidity to which the sensor could be subjected. However, the limitations in monitoring of the supply air (air leaving the dehumidification coil) are often overlooked. For example, outdoor or mixed air at a typical temperature of 30°C may be at a temperature of 16°C after passing through the cooling coils of an air-handler. Assuming the relative humidity of the outdoor or mixed air was 70 percent and that moisture removed by the cooling coils reduced the humidity ratio from .019 kg moisture per kg dry air to .011, the relative humidity of the supply air is theoretically 100 percent even after the 42 percent reduction of the humidity ratio. However, the air downstream of the coil will be slightly below saturation since the bypass factor of actual coils is always greater than zero. Also, the sensor is generally located downstream of the fan which elevates the temperature slightly and reduces the relative humidity. Although these two considerations will tend to reduce the relative humidity, it will often exceed 95 percent.

The high humidity restrictions of the various sensors can often be avoided by raising the temperature of the high relative humidity air before it is measured. This can be accomplished by passing a sample of the air to be monitored through a simple heat exchanger, for example, by using the air adjacent to the air-handler to raise the temperature of the sample as shown in figure 10. The temperature of the air adjacent to the air-handler is usually in the range of 25°C to 35°C which is adequate to raise the temperature of the 16°C supply air (in the example) to 20°C. Under these conditions the relative humidity of the supply air in the heat exchanger is approximately 75 percent. By monitoring the temperature adjacent to the sensor, the humidity ratio of the supply air can be computed or found in psychrometric charts or tables.

Dew-and-Frost Point Hygrometers

Chilled Mirror Type

When moist air at a temperature t, pressure P, and a humidity ratio W (kg moisture per kg dry air), is cooled over a chilled mirror surface, a temperature t_d or t_x is eventually reached. At these temperatures, the air becomes saturated and dew or frost forms on

the chilled mirror surface. These temperatures are called the thermodynamic dew-point (t_d) or the thermodynamic frost-point (t_x) and uniquely establish the humidity ratio, W, at pressure P of the moist air.

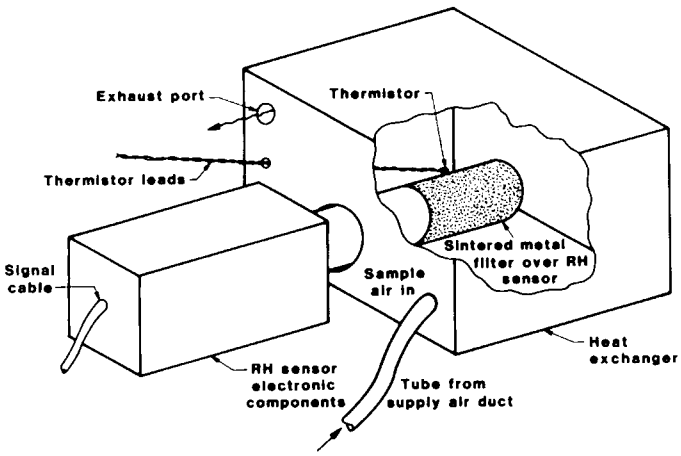

Figure 10. Schematic diagram showing the RH sensor in a simple heat exchanger. The temperature of the air is increased and the RH is reduced to a value within the limits of the sensor

The formation of dew or frost on the mirror is usually detected photoelectrically. The temperature of the mirror is regulated thermoelectrically to maintain a constant film thickness or percent coverage. Under these conditions the mirror temperature, which is monitored by a resistance temperature thermometer (RTD), approaches the thermodynaic dew- or frost-point temperature. Figure 11 shows a schematic diagram of a chilled mirror type hygrometer.

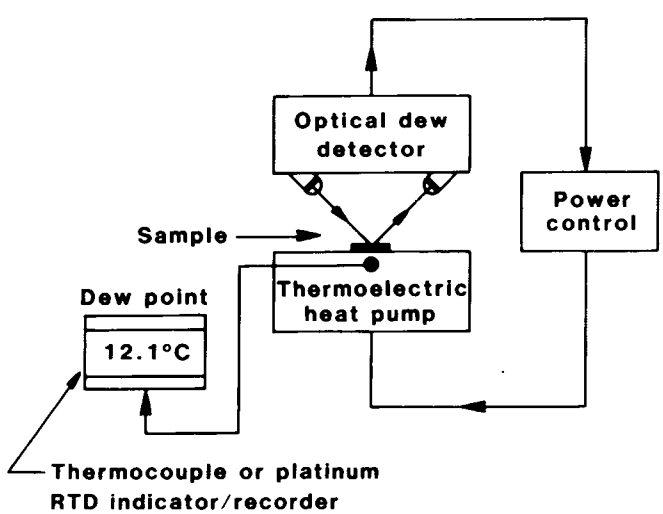

Figure 11. Schematic diagram of chilled mirror type dew point sensor

Particulate matter, especially water soluble particulate matter, can lower the vapor pressure, and hence the vapor dew point. Therefore, the mirror must be kept clean. In addition, the presure in the chamber containing the mirror must not vary from the pressure of the moist air being monitored by more than 0.5 percent. This pressure problem is usually avoided by placing the valve restricting the quantity of air passing over the mirror downstream of the mirror chamber.

Heated Saturated Salt Solution Sensor

When a saturated salt solution is exposed to an ambient atmosphere having a higher vapor pressure than the equilibrium vapor pressure of the saturated salt solution, there will be a net flow of vapor from the ambient atmosphere to the salt solution. This results in a dilution of the saturated salt solution until the two vapor pressures are equal. If the temperature of the saturated salt solution is increased, a point will be reached where the two vapor pressures will be equal and the solution will remain at the same concentration. A measurement of this temperature determines the ambient vapor pressure. Similarly, if the saturated salt solution at some given temperature is exposed to ambient moist air with a lower vapor pressure than that of the salt solution, the temperature of the solution can be reduced until the two vapor pressures are equal. If there were some means to determine when the two vapor pressures were equal, the temperature of the saturated salt solution could be used as a hygrometric indicator. Although this would be very difficult to achieve directly, the conductivity of a salt solution is a good indicator of its concentration.

A hygrometer known as the "dewcel"[9] uses a thermometer (usually a RTD) which is surrounded by a wick impregnated with a solution of lithium chloride. A bifilar coil is wound on the outside of the wick. Alternating voltage is impregnated with a solution of lithium chloride. A bifilar coil is wound on the outside of the wick. Alternating voltage is impressed across the electrodes through a ballast to control the voltage. The flow of current through the saturated wick generates enough heat to raise the temperature of the device. As the temperature rises, water evaporates from the solution and the resistance increases, reducing the current. The device then tends to cool because of the reduction in current. Under stable conditions, the solution attains an equilibrium temperature where the electrical energy consumed by the windings equals the evaporation loss to the ambient. This means that the solution and ambient vapor pressures are equal. Retaining the temperature of the solution at a point where the two vapor pressures are equal by adjusting the current through the windings, the temperature of the device can be used to determine the dew point of the moist air.

The "dewcel" has an operating range from -29°C to 70°C dew point with an uncertainty of

2°C. Its response time is similar to that of the chilled mirror; however, the "dewcel" falls in the medium price range. The "dewcel" functions best in still air. Velocities above 10 m/s conduct too much heat away from the device, lowering the equilibrium temperature and shifting the calibration. The device is often shielded in a duct to avoid the high velocities. If the device is exposed to high ambient vapor pressures with no power across the electrodes or after a power failure, the salt will dissolve, forming a dilute solution, and flow from the wick. Many commercially available "dewcels" can be refurbished without disturbing the fundamental calibration.

Flow

In monitoring the performance of building service systems, one of the most difficult parameters to measure and control is the flow of the various fluids (air, water, steam). As a consequence, in Energy Management and Control Systems, the flowrate or the total quantity of flow is often the least accurate measurement. The energy consumed, however, normally depends directly on this parameter.

Scheduled on-site calibration is recommended for all types of flow meters and their transmitting systems. The extent and type of on-site calibration varies from one type of meter to another. However, one major factor applicable to all types of flow metering calibration must be called to the attention of the reader in the introduction of this section to avoid repeating it throughout the text and to emphasize its importance when carrying out the actual on-site calibration and when setting up maintenance schedules for routine calibration: the deterioration of primary elements of the meter (the parts which interact with the flowing fluid) by abrasion and chemical and/or electyrolytic reactions has been found to be a major problem in the continuous monitoring of fluids. This is especially true in monitoring the flow of liquids. In general, the deterioration of a metering system by abrasion and chemical and/or electrolytic reactions is a continuing problem that is hidden in the initial design and is often found to be the basis of on-site meter calibration problems. The transducer (i.e., a device which converts one form of energy into another) is also subject to deterioration from environmental conditions. This fact reflects on transducers for all types of monitoring covered in this paper. In the case of the fluid metering devices utilizing differential pressure (ΔP) measurements, the calibration of the transducers often is more critical than that of the primary elements.

Orifice, Flow Nozzle and Venturi Meters

Since differential pressure meters of the orifice, flow nozzle, and venturi types are used extensively as flow meters, a brief description of them is given. These meters have been used for flow measurements in closed conduits dating back to the past century. Bernoulli's theorem (1738) is the basis for the hydraulic equation used in converting pressure difference with flow rates.[10]

Figures 12, 13, 14, and 15 indicate the shapes and pressure tap locations for orifice, flow nozzle, and venturi meters. Orifice meters are simple in design. They are manufactured from flat plates and therefore are relatively inexpensive, but they produce the largest pressure losses. The design of nozzle and venturi meters is more complex. These meters offer lower pressure losses.

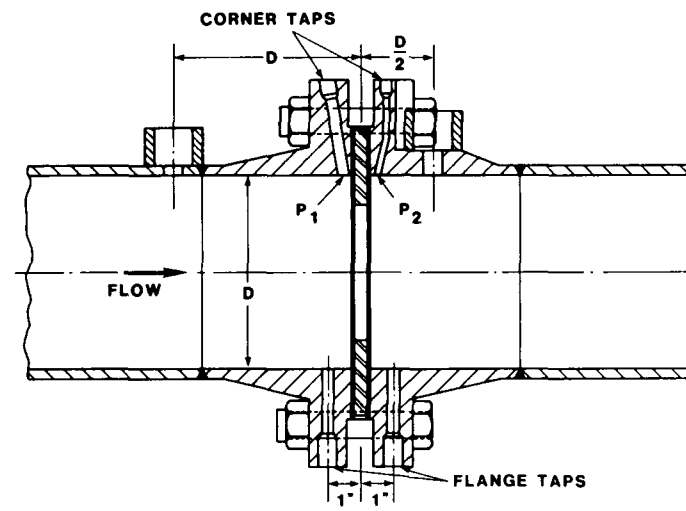

Figure 12. Thin-plate, square-edged orifice mounted between flanges. For illustrative purposes, three pairs of pressure taps are shown: D and D/2 taps, flange taps (1", 1"), and corner taps which sense the pressures in the upstream and downstream "corners" of the orifice plate. The upstream pressure tap is P_1, and downstream, P_2

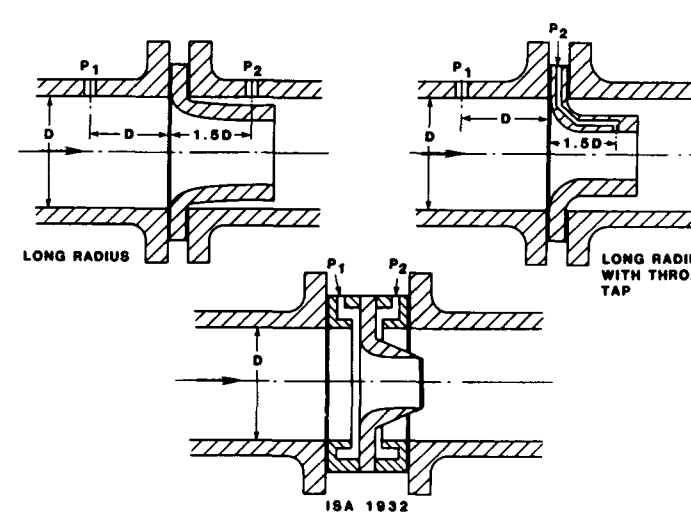

Figure 13. Flow nozzles showing location of pressure taps

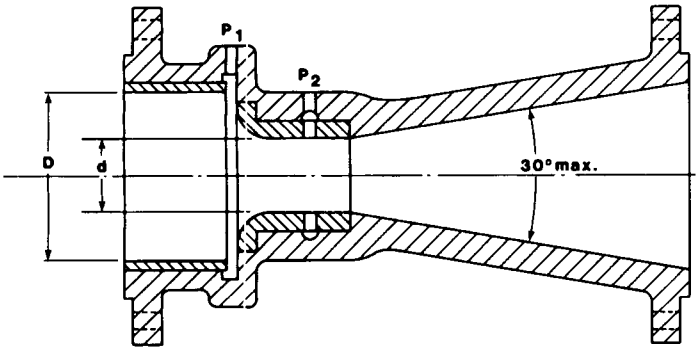

Figure 14. Nozzle venturi meter showing location of pressure taps

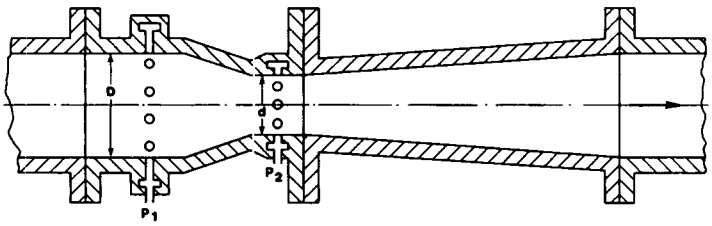

Figure 15. Classical venturi meter showing location of pressure taps

The primary element is known as that part of the meter system which interacts with the flowing fluid. In these meters, this is the orifice plate, flow nozzle, or venturi. The interaction causes fluid acceleration and pressure change. The secondary element is the instrument system which senses and measures this interaction; in these cases, the secondary element is a ΔP transducer system or a differential manometer including the pressure sensing lines.

Positive Displacement (PD) Flowmeter

This is a quantity-type meter in which a chamber is completely filled with fluid and then emptied. Counting each filling indicates the flow. The counter may be a mechanical, totalizing type with disc or wheel type readout; or an electromagnetic pulse or optical type readout may be used. This will allow the meter to be used for either flowrate or totalizing applications. In some cases, the primary element is magnetically coupled to the counter, eliminating shaft sealing. The PD meter may be considered a special type of fluid motor with a high volumetric efficiency and operating under light load.

For liquids, the types of primary elements used include the nutating disc; reciprocating piston; oscillating or rotory piston; rotating gear, lobed impeller; and sliding and rotating vanes. Figure 16 is a cross-section view of a nutating disc type.[10]

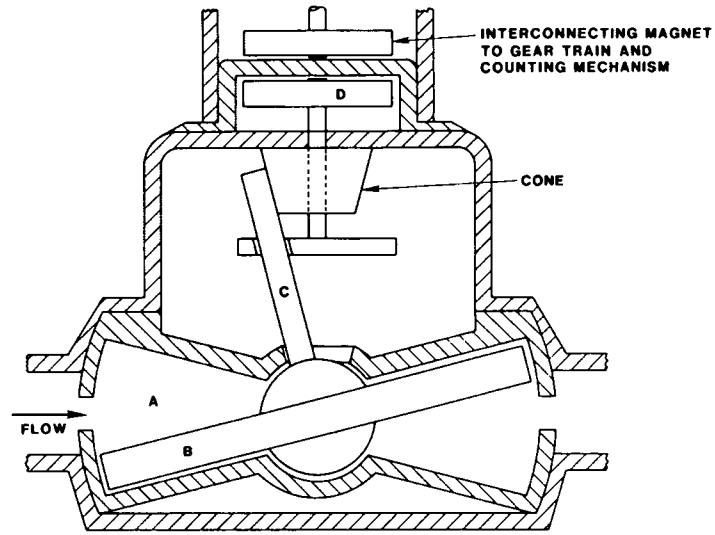

Figure 16. Cross-section of a positive displacement meter. Liquid flowing through chamber (a) causes disc (b) to nutate. This motion results in the rotation of spindle (c) and drive magnet (d)

Vortex Shedding Flowmeter

This meter operates on the principle that the frequency of vortex shedding for fluid flow around a submerged object is proportional to the fluid stream velocity. Flowrate is measured by detecting the frequency. Figure 17 shows design details of one meter. The vortices are shed behind the bluff body. The details of the operation of this meter are too complex for this paper. See reference 10 for further information.

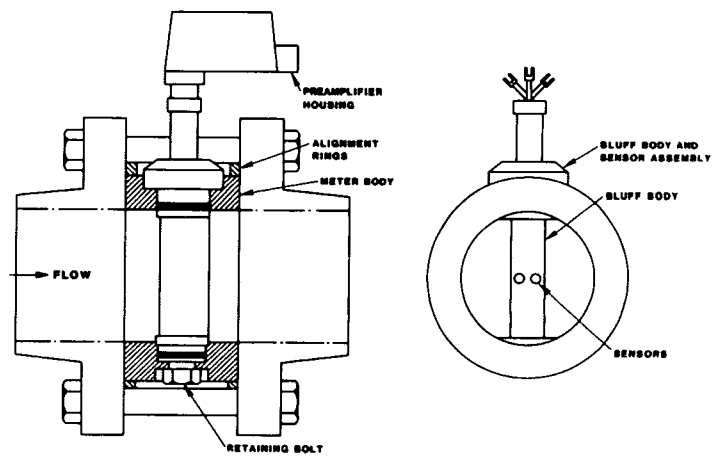

Figure 17. Mechanical design of a vortex shedding flowmeter

Turbine Meter

Figure 18 shows a typical turbine meter. This meter contains a bladed rotor which

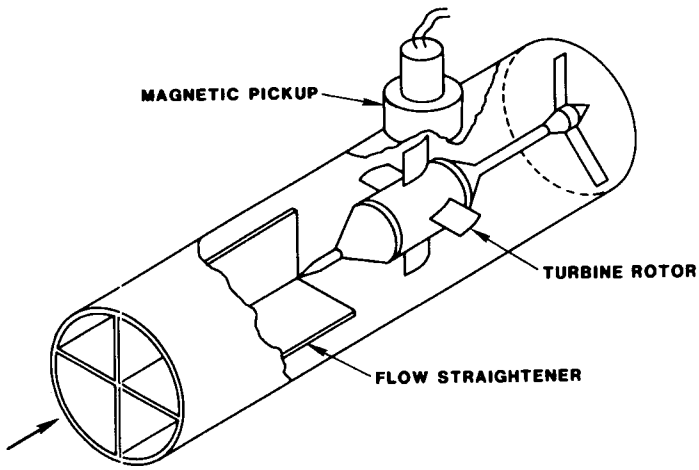

Figure 18. An axial flow turbine meter for liquids, with an electromagnetic pickup coil

rotates at a velocity proportional to the volume rate of flow. Most models employ a magnetic pickup, as shown, in which passing rotor blades vary the reluctance of a magnetic circuit, and generate an AC voltage in the pickup coil. The pulse frequency is directly proportional to rotor speed. This signal is sensed as an indication of flow. It can be counted by an electronic counter, or converted to an analog signal using circuits converting frequency to voltage.

The calibration factor is expressed in electrical pulses generated per unit volume of throughput; e.g., pulses/gallons. This factor is sensitive to flowrate, fluid density, and viscosity, the fluid flow pattern at the meter entrance, and sometimes the meter orientation.

Long term, satisfactory turbine meter operation requires a clean fluid. When dirt or particulate matter are entrained in the fluid, meter performance may be adversely affected due to increased bearing friction. Therefore, a suitable filter upstream is needed. The dirt problem is one of the common difficulties in using turbine meters in the water lines of building systems because these systems easily may become contaminated. The level of contamination tolerable for heating, ventilating and air-conditioning (HVAC) equipment may very likely be intolerable for turbine meters. The required level of filtration depends on both the meter size and the bearing design. For smaller meters such as the one-inch size, filtration to 50 microns is typical. Meter bearing material and design should be compatible with operation in water.

Target Meter

A sketch of a target meter for closed channel flow is shown in figure 19. Other names used for this type meter include vane, force, and drag force. The change in momentum of the fluid as it accelerates past the target

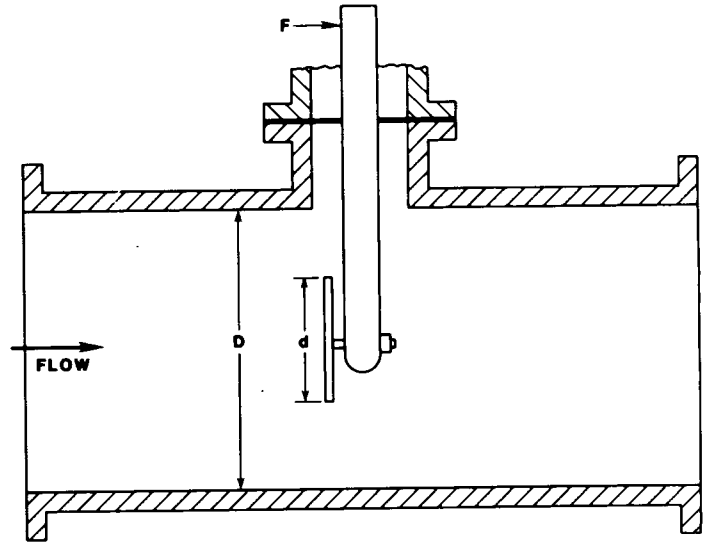

Figure 19. Sketch of a target meter

causes a drag force which deflects the target. This deflection is measured by a force transducer such as a strain gauge system or linear differential transformer. With incompressible flow past the target, this drag force depends on the size and shape of the target and the proportion of the pipe cross section it occupies, the fluid velocity, and the fluid properties of density and viscosity.[10]

Multiple Pitot-Static and Reverse-Pitot Tube Assemblies

Several designs of flowmeters of these types are available. Figure 20 shows the schematic diagrams of an assembly designed for mounting in an air duct system. It contains 16

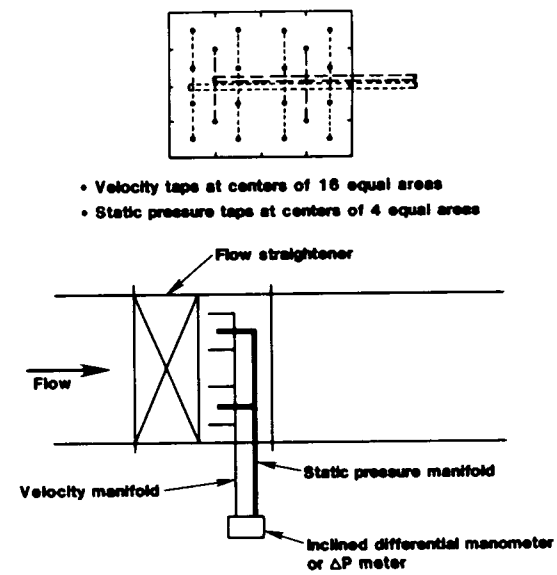

Figure 20. Pitot-static rake assembly for measuring air flow in a duct. The ends of the velocity taps are open to receive the impact pressure. The ends of the static pressure taps are closed and a ring of radial perforations receive the static pressure

pitot-tubes spaced on an equal area traverse basis and connected to a common impact pressure line, and four static legs connected to a common static pressure line. Since the velocity profile varies in the duct cross section, an average value of impact pressure and an average value of static pressure are obtained. The ΔP is measured by means of a manometer or pressure transducer system. An advantage of this assembly is that a single ΔP measurement is used instead of 16 measurements, or instead of the traversing approach with a single tube. Because of the variation in impact pressure (velocity) from tube to tube and to account for the blockage effect of the assembly, reliable measurement of flowrates require that the assembly be calibrated onsite over the range of velocities to be encountered. A flow straightener (honeycomb) is installed upstream of the assembly to eliminate transverse or swirling velocity components.

In fully developed turbulent flow, the velocity profile (velocity V as a function of radius r) changes with Reynolds number R_D becoming more uniform as R_D increases; or with a single fluid, as flowrate increases. For a detailed analytical analysis of the influence of the velocity profile on the coefficient of discharge, see reference 11.

Ultrasonic Flowmeter

Ultrasonic flowmeters can be readily attached to the outside of existing liquid-filled pipes without shutdown, diversion, special sections, or isolation valves. The economic advantage of ultrasonic flowmeters over conventional flowmeters increases with pipe size.

The primary elements are nonintrusive and are sensitive over a wide range of velocities of the liquid flowing within the pipe without inducing a pressure drop or other disturbance to the medium being monitored.

Several ultrasonic techniques are used in the measurement of flow. The majority of instruments of this type use various configurations of acoustic sources (transmitters) and detectors (receivers). The velocity of the fluid flowing in the pipe is detected from the effect of the moving liquid on the sound waves. In general, this effect is determined by comparing the signals transmitted with those received. The two techniques most commonly used to detect the effect of the flowing liquid on the sound waves are known as the transit-time meters and the Doppler meters.

The transit-time flowmeters utilize the fact that fluid flow along the acoustic path affects the time it takes for the acoustical signal to travel from the transmitter to the receiver. Transit-time meters transmit bursts of ultrasonic energy across the pipe as shown in figure 21.

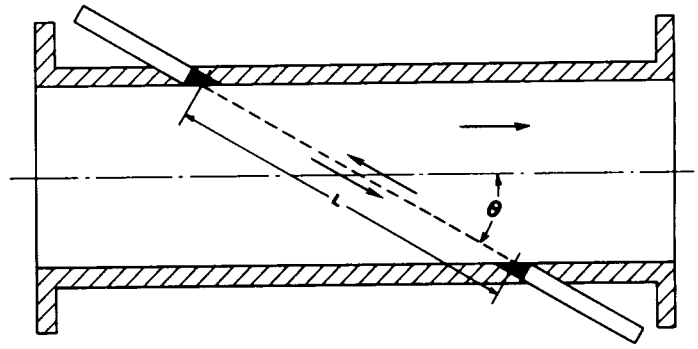

Figure 21. Single path, transit-time ultrasonic flowmeter

Ultrasonic flowmeter utilizing the Doppler effect function on the shift in frequency produced when the sound waves are reflected from moving bodies. In this type of ultrasonic flowmeter, a single transmitter projects a continuous ultrasonic beam at about 0.5 MHz through the pipe wall to the liquid flow being monitored. The particles carried by the liquid have velocity components in the direction of the ultrasonic beam since the beam makes an angle which is less than 90o to the direction of flow. The reflected ultrasonic waves detected at the receiver (which can be located adjacent to the transmitter or on the opposite side of the pipe) are shifted in frequency in proportion to the velocity of the liquid. The shift in frequency is determined and used to measure the flow rate. Dopler meters are suitable for liquids containing a consistent density of acoustically reflective particles.

Since the transmit-time meters require relatively clean liquids and the Doppler type meters require relatively small acoustically reflective particles, and these conditions are rarely met in typical EMCS applications, frequent periodic calibrations of these meters are required.

Insertion Type Turbine Meter

This is another type of turbine meter in which a meter assembly is mounted on the end of a stem or strut and positioned as desired in a large pipe, duct, or open channel. Figure 22 shows a typical installation sketch. Advantages include low cost compared to the "full bore" turbine meter for large pipe installations; easy installation including no disruption to the fluid flow when an isolation valve is used, insuring essentially no pressure loss; and a digital output. Other characteristics, including the influence of fluid properties, density and viscosity, fluid lubricity, the effects of retarding forces due to bearing friction and electromagnetic loading, and the effects of flow patterns have all been discussed above for full bore turbine meters. Again, a clean fluid is imperative for satisfactory, long-term operation.

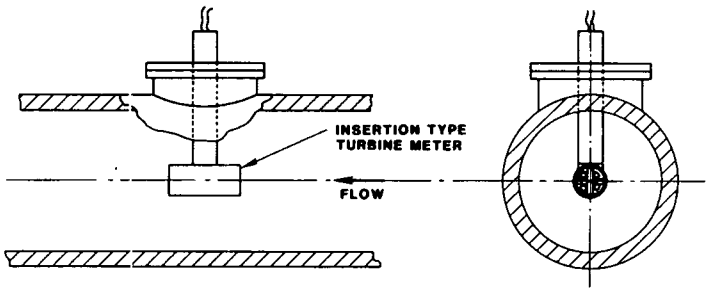

Figure 22. Insertion type turbine meter. Typical installation

Insertion turbine meters are available for use in water, air, and steam. Typical velocities range from 50 or 60 feet/second maximum for liquids to 300 feet/second maximum for gases. Manufacturers typically claim a linearity of ±1 percent full scale for 10:1 flow range.

The insertion turbine meter, like the target meter, senses local fluid velocity only and thus, for measuring flow in closed conducts (pipes and ducts), the performance is dependent on the velocity profile.

Possible Effects of Systematic Errors

This section is presented to emphasize the necessity of careful and frequent calibration of all components in any system being used for EMCS. Each item being calibrated and every standard used for calibration is subject to error beyond the statistical uncertainty in its measurement. The exact value of the error is very seldom known for any of the items used for the calibration or in the end product being calibrated.

For example, consider the error of a single readout from a series of components of a typical remote temperature-monitoring system. If the inaccuracy in the calibrated sensor/transducer device is ±1%, the inaccuracy in the transmitting device is also ± 1 %, the inaccuracy in the transmission means is ±.5%, and the inaccuracy of the receiving device is ±1%, then the maximum error in the actual readout would be ±3.5%.

Since the direction of the error seldom falls in the same direction for each component, the uncertainty of a measurement is often expressed using the root-sum-square (RSS) technique, also known as the statistical bounds technique.[2] The RSS technique states that when a given variable, s, is determined from several measurements (say w, x, y, and z) according to the relation:

$$s = f(w,x,y,z),$$

the probable uncertainty which we may call R_s of the calculated value s, is determined by the following equation:

$$R_s = \sqrt{r_t^2 + r_m^2 + r_i^2 + r_r^2} \qquad (4)$$

where:

R_s is the uncertainty of thetemperature readout with respect to the actual temperature being monitored,

r_t is the uncertainty in the calibration of the sensor/transducer,

r_m is the uncertainty in the calibration of the transmitting device,

r_i is the uncertainty in the calibration of the transmission medium, and,

r_r is the uncertainty in the calibration of the receiving device.

Inserting the values given in the above example into equation (1), we have:

$$R_s = \sqrt{.01^2 + .01^2 + .005^2 + .01^2} \qquad (5)$$

R_s = ±.018 or ±1.80 % is the probable uncertainty in the temperature reading.

The above example points out several items of particular interest. First, the values inserted for the uncertainty of the individual components may have at first appeared to have been somewhat "risky;" i.e., on the low side or the more accurate side. However, the maximum error in the typical example resulted in a value of 3.5% and the uncertainty computed by the statistical bounds or RSS technique was 1.80%. Regardless of which technique was used, one point is clear: both values are likely to be too high for the satisfactory calibration of a remote-sensing system. Therefore, the inaccuracy in the calibration of each component must be reduced.

Second, the temperature measurements in an EMCS are generally used in conjunction with other measurements such as flow to calculate the engineering values required for efficient operation of the mechanical systems of the buildings. Any uncertainty introduced at the temperature-monitoring level will always increase the uncertainty of the engineering value that is required.

Third, the calibration of temperature-monitoring systems in an EMCS are usually considered by management to be the least troublesome and, therefore, are expected to be the most accurate of all EMCS measurements.

In general, the effects of the accumulation of errors in any chain of events that take place in a remote- or direct-sensing system can result in an error in the end product beyond an acceptable value. See reference 2 for further details on error analysis.

References

1. Hurley, C. Warren and Schooley, James F., Calibration of Temperature Measurement Systems Installed in Buildings, NBS Building Science Series 153, January 1984.

2. Doebelin, E.O., "Measurement Systems: Application and Design," McGraw-Hill Book Co., 1975.

3. Keenan, J.H., "Thermodynamics," The M.I.T. Press, 1970.

4. Feldman, C.L., "Automatic Ice-point Reference Junctions," Instrument Control Systems, Jan. 1965.

5. Hyland, Richard W. and Hurley, C. Warren, General Guidelines for the On-Site Calibration of Humidity and Moisture Control Systems in Buildings, NBS Building Science Series 157, September 1983.

6. Harrison, L.P., Fundamental Concepts and Definitions Relating to Humidity, Humidity and Moisture, Vol. 3, A. Wexler and W. Wildhack (Eds.), Reinhold Publishing Corp., New York, 1964.

7. ASHRAE, "Brochure on Psychrometery", ASHRAE, 1791 Tullie Circle, N.E., Atlanta, GA, 1977.

8. ASHRAE, "Standard Method for Measurement of Moist Air Properties", ASHRAE, 1791 Tullie Circle, N.E., Atlanta, GA, 1981.

9. Wexler, A., Electric Hygrometers, National Bureau of Standards, Circular 586, 1957.

10. Baker, David W. and Hurley, C. Warren, On-Site Calibration of Flow Metering Systems Installed in Buildings," NBS Building Science Series 159, January 1984.

11. N.Q. Thoi and W.K. Soh, On the Averaging Technique and the Discharge Coefficient of the Annular-Averaging Flow Sensor, ISA Transactions, Volume 18, No. 1, January 1979, pp. 41-48.

Instrumentation for Monitoring Buildings in Hot, Humid Climates

Charles J. Cromer
Florida Solar Energy Center
Cape Canaveral, Florida

Abstract

Monitoring buildings for energy performance in hot, humid climates is not unlike monitoring in other environments in many respects. However, since the latent loads represent a major portion of the overall loads, proper care must be exercised to monitor the changes of latent as well as sensible behavior of the monitored envelope.

This paper discusses some of the techniques utilized in instrumentation and calibration of equipment designed to measure the overall energy reponse of two townhouse units at Rangewood Villas, Cocoa, Florida.

Introduction

The U.S. population is shifting to the South. National Association of Home Builders figures indicate that out of 1.7 million housing starts in 1983, 67.8% occurred in the South. Of the housing starts in the South, it is estimated that about 62% occurred in the southeastern U.S., which experiences long, hot, humid summers. As more and more homes are built in the South, cooling energy use increases. For example, the average Florida home uses 30% of needed energy for cooling.

To reduce these cooling loads many innovations have begun to emerge; radiant barriers, ceiling fans, vent skin walls and vent skin roofs among these. However, the most readily utilized cooling strategy remains the old standby, ventilation. During times of lower outside temperatures, such as the nocturnal swing, the home is ventilated and the air conditioner is turned off. Single and multi-family designs are reemerging that take advantage and even enhance ventilation.

Little information is now available to predict the energy effectiveness of this strategy. DOE-2, BLAST and TARP have shown to be good predictors of energy use when a home is closed and air-conditioned, but poor predictors when a strategy such as nighttime ventilation is used in a humid environment [1]. It is believed that the error is associated with the absorption of moisture during the ventilation period which then is released producing an additional latent load on the ac equipment when it is restarted.

The monitoring of residential buildings in hot, humid climates must therefore include the moisture response of the envelope and furnishings as well as the temperature response for even the most fundamental energy analysis.

The Rangewood system was designed to provide a complete set of information on latent and sensible responses. Temperature, humidity and power use are monitored by zone in the envelope, latent versus sensible components of the ac power use are characterized by probes on the ac unit, and a complete weather station measures the external forces acting on the envelope at the site. It is hoped that this level of instrumentation will provide the information needed for whole house validation of moisture adsorption-desorption (MAD) algorithms developed to enhance main-frame modeling programs.

Data Acquisition System

The Campbell Scientific CR-7 is the basic remote data acquisition unit used [2]. A TRS-80 Model III personal computer (PC) is used to automatically access data from the Campbell. We have expanded the CR-7 ring memory to its

full capacity of 60K. It can store about 2.5 days of 15-minute-interval data with 74 channels. Thus, if an error occurs with data transimission over the weekend, the full data set can be recouped Monday morning before it is overwritten with new data.

The CR-7 has a RS-232 communication interface and auto-answer modem. Each night at 2:00 a.m. the TRS-80 telephonically calls the CR-7 over a Hayes Smartmodem [3] and commands it to down-load the previous 24 hours (96 15-minute data sets) of data. The TRS-80 Model III loads the data to a 5 1/4" floppy disk as it is received. A hard-copy printout is made at the completion of off-load of data. These floppy disk copies are retained as back-up.

Data is transferred to a disk on a VAX computer where successive days of data are compiled into the master data file on disk. The data is then stored on magnetic tape as a final back-up.

The VAX storage provides the opportunity to format weather tapes from the on-site data compatible as input by main-frame modeling programs.

The technique of utilizing a micro computer to control data dump from the Campbell CR-7 instead of dumping it directly to a main-frame has several advantages. The first is cost. One personal computer can control several field systems. The main-frame CPU time is minimized by local data manipulation. Hard-copy is completed at the PC before it is transferred. The second is redundancy. The additional copy of the data on floppy can prevent data loss when the main-frame goes down, is shut down for modification or an error is made during data manipulation.

Finally, the use of a Mayday + 6C uninterruptable power supply [4] protects the PC programs and data from lightning damage due to frequent summer thunderstorms.

Measurements

Moisture Measurements:

Initially this project was designed to use three type of instruments to measure moisture: wet & dry-bulb aspirated thermocouples (Fig. 1), impregnated polystyrene hygrometers (Fig. 2), and condensing mirror dew point sensors (Fig. 3).

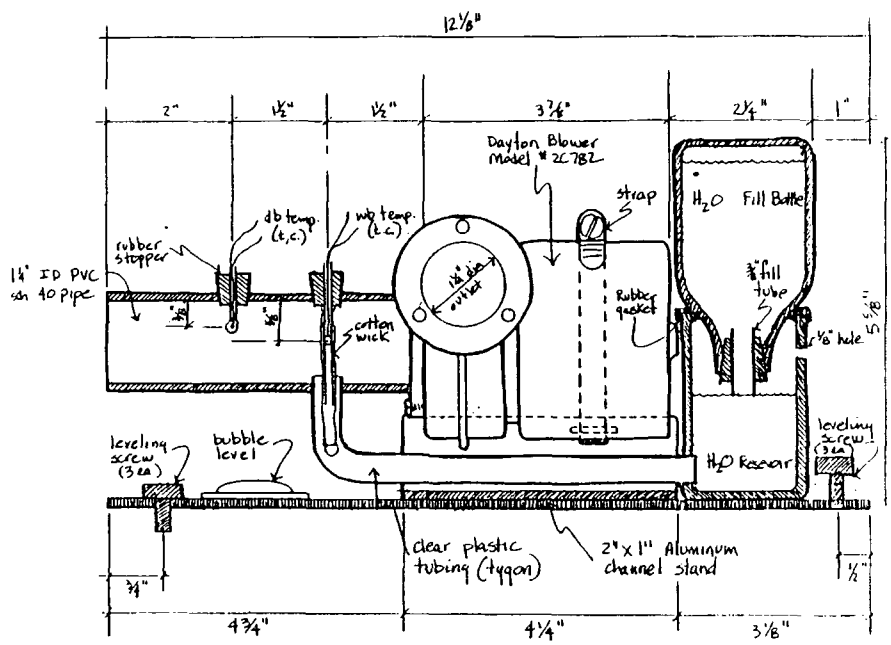

Figure 1. Wet bulb/dry-bulb aspirated psychrometer

A calibration box was constructed of isocyranurate insulation board such that all probes could be inserted within the same airflow and exposed to the same steady state moisture condition. Two laboratory thermometers, certified to one one-hundredth degree centigrade were utilized for the wet-bulb and dry-bulb calibration readings. Most probes were found to vary from the factory calibration values.

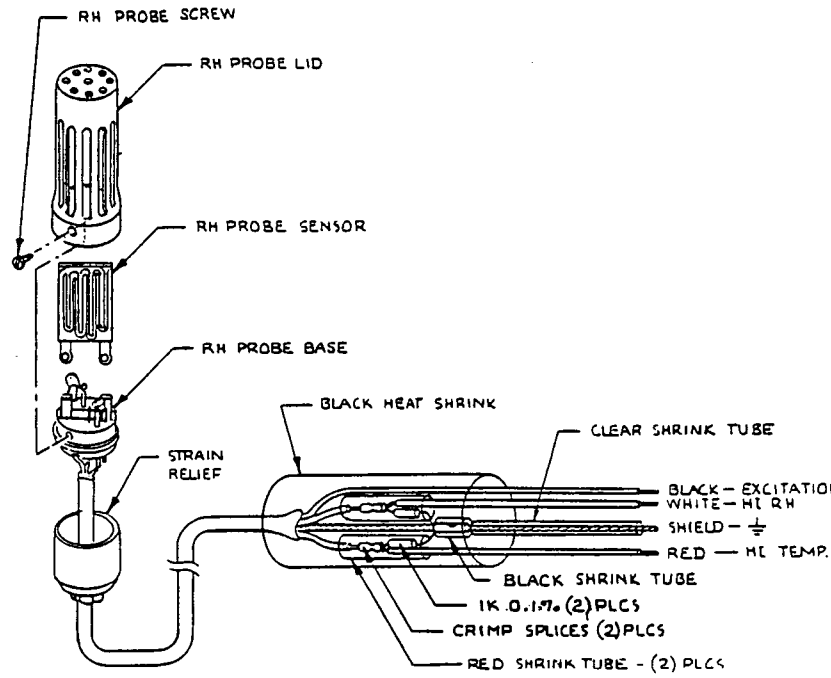

Figure 2. Styrene hygrometer assembly by Campbell Scientific

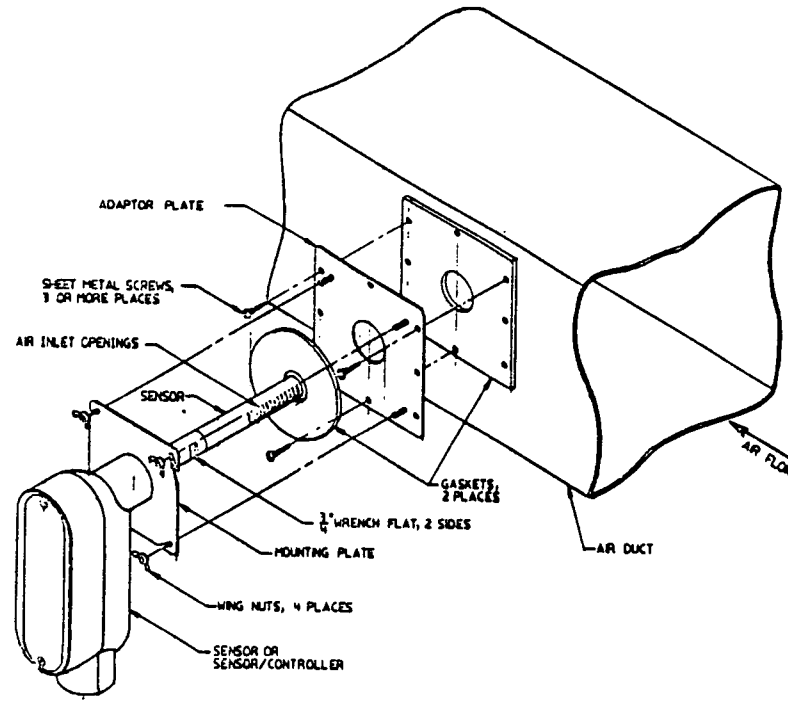

Figure 3. Duct assembly of DEW-10 condensing mirror hygrometer by General Eastern

A first order calibration curve fit was developed for each of the seven styrene hygrometers by Phys-Chemical Research, the four General Eastern condensing mirror dew point sensors, and the five wet-bulb dry-bulb aspirated thermocouple sensors built at FSEC.

The wet-bulb sensors to be used in the field were found to be very sensitive to set-up conditions. They exhibited a drift toward erroneous readings representing wetter air after several days, i.e. the probes did not show the correct wet-bulb depressions. Because of the instability of this type of device and the high maintenance required, styrene hygrometers were used in their place.

Temperature Measurements

The CR-7 was checked for its thermocouple stability by jumping a single thermocouple over all its TC input ports. It was necessary to add a small muffin fan to draw air across all the connector boards to reduce variations to less than 0.1°C across all channels when in the double ended mode. This fan assembly was permanently installed for the field work.

A series of separate thermocouples were then checked and found to be within 0.1°C variation.

Location of Moisture and Temperature Transducers

Dry-bulb temperature and relative humidity are measured in each zone of the unoccupied unit by aspirated thermocouples and styrene hygrometers. The dry-bulb temperatures for the occupied unit are measured by shielded but not aspirated thermocouples. Because the downstairs zone contains a small bedroom, this area is measured for dry-bulb temperature by shielded thermocouples in both homes. Finally, a shielded thermocouple is located in both units by the air conditioner thermostat (positioned on the wall near the bottom of the stairs). This provides three dry-bulb temperature measurements for the downstairs zone in each unit.

Each zone of both buildings is thus monitored for both temperature and relative humidity (Fig. 4).

The enthalpy change of airflow across the coil of the heat pump in both units is derived from measurements of the incoming and outgoing air streams. Dry-bulb measurements are made with shielded thermocouples located in front of the air blower and beyond the evaporator coil. Dew point measurements are taken using four Dew 10 condensing mirror humidity transmitters by General Eastern.

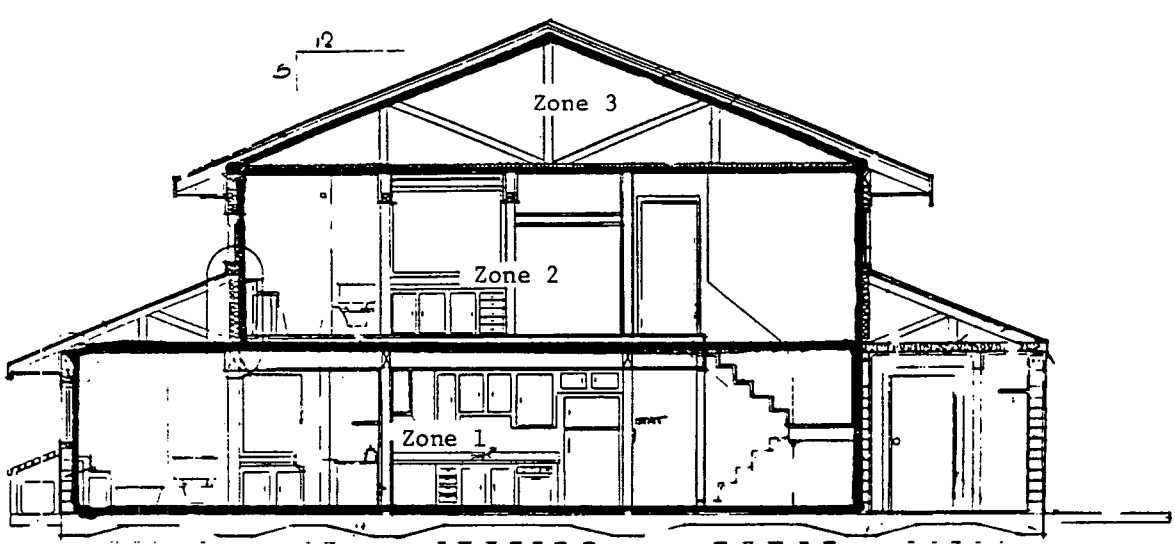

Figure 4: Instrumentation Zones

Airflow was measured on a one-time calibration of duct flow using a TSI omnidirectional air velocity transducer Model 1610. Airflow was measured above the evaporator coil of both units, and checked by the cumulative flow at all duct outlets. The time the fan is on/off is maintained by an analog channel for each unit.

As a check of latent load, (measured directly by the dew point sensors) the condensate of both units is measured by rain gauge tipping buckets. This measurement has been shown to be of some value in checking other data. However, the time required for the condensate to flow from the ac unit to the tipping buckets introduces errors in developing direct correlations of condensate to infiltration.

Hot Water Tanks

The hot water tanks are located in a small closet under the stairs in the downstairs zone. The heat contributed to zone 1 as tank loss from the hot water tanks can be calculated from a single thermocouple measurement of tank top temperature. The tank heat loss coefficient has been previously determined.

A simple measure of tank heat contribution from hot water power use is not possible because both units have solar assisted heat pump hot water systems.

Power Measurements

Power consumption within each unit provides a measure of the contribution of appliances to the heating/cooling loads.

Watt-hour or kWh meters can be purchased with guaranteed ± 1 percent accuracy. Previous work at FSEC has shown them to be accurate and stable. A system to interface meters with the CR-7 can be made or purchased. For this project it was decided to make pulse initiators because those units available on the market start at about $100 per meter. We utilize an infared emitter and an infared detector pair to provide pulses as the kWh meter disk turns. All these meters have two small holes in the rotating disk. The emitter can be glued above the disk and aligned with the hole path. The detector glued under the disk provides an output pulse to the pulse counter each time a hole in the disk passes by. The 110 Volt meters rotate once every six Watt-hours and the 220 Volt meters rotate once every 12 Watt-hours. This approach, as shown in Figure 5, has worked quite well after correct alignment of the emitter-detector pair.

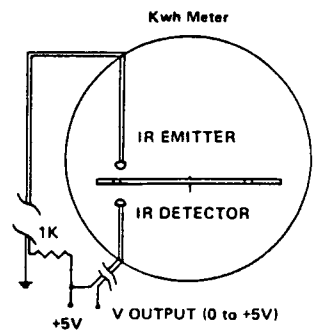

Figure 5. Infared emitter-detector pair on kWh meter

The total power use is recorded by these kWh-meter pulse initiators (one on each unit). Air conditioner power use, water heater power use, and zone 2 power use is monitored by separate meters. Because of the limitation of pulse channels, it is necessary to calculate zone 1 power use by subtracting the air conditioner, water heater, and zone 2 use from the total use.

Roof Thermocouple Tree & Ground Probes

The addition of eight thermocouple measurements provides a thermocouple tree through the vented roof of unit A. Although surface-by-surface measurements of heat flow on these units is beyond the scope of this project, the information on the actual temperatures through the radiant barrier/vented roof structure may prove useful in future analysis (see Figure 6).

At the Rangewood Villas, ground temperatures are being taken by double ended thermocouples at depths of 6", 12", and 24", five feet from the edge of the building. Additionally, the temperature of the west edge of the slab is being recorded.

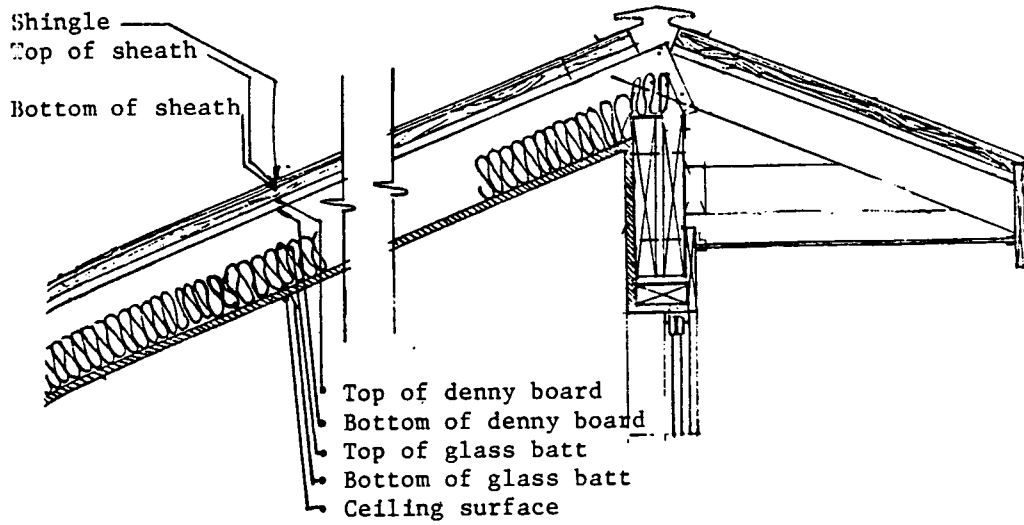

Figure 6. Thermocouple tree through radiant barrier roof

Wind

Wind speed and direction is measured by the Model 014A wind speed sensor (contact closure type) and the Model 024A wind direction sensor. The CR-7 wind vector program (#76) is utilized to provide mean wind speed, mean wind vector magnitude, mean wind vector direction, and standard deviation of wind direction at the site.

The wind-sensing equipment (with the lightning arrester box) is attached on the west end of the test building approximately two feet above the roof ridge.

Solar Radiation

Solar radiation measurements (global) are being made by two Eppley Precision Spectral Pyranometers and two LI-COR LI-200S pyranometers. One Epply and one LI-COR measure global solar radiation on the horizontal, and one Epply and one LI-COR measure global solar radiation in the southern roof plane. These are mounted on the west end of the uppermost portion of the roof.

Rain

TARP uses an indication of rain to set the outside temperatures of exposed surfaces to the wet-bulb temperature. This models the cooling effect of rain on the building. Rain at the site is recorded by a Texas Electronics Model 525 remote-reading tipping-bucket rain gauge.

Cloud Cover

Sky emissivity is being measured at the site by an Eppley Precision Infared Radiometer. Additionally, a FUNK-type pyrradiometer by Swissteco Instruments is measuring net radiative exchange between sky and roof [5].

It is hoped that correlations can be utilized to provide a relationship between cloud cover and the readings of these instruments.

Infiltration

For model verification, a correlation needs to be developed to provide infiltration values as a function of wind speed and direction. This effort using the SF_6 gas tracer dilution method is yet to be completed. A check of infiltration values is also planned using the blower door technique.

Conclusions

For hot, humid climates, the recording of moisture or relative humidity is crucial to the proper monitoring of building envelopes. Our experience has shown that aspirated wet-bulb instruments are very difficult to maintain and that the styrene hygrometers are a better choice for these measurements.

The use of a PC with its uninterruptable power supply to daily off-load the site produced data has proven to be a highly reliable means by which to archive field data.

The monitoring of these two townhouses at Rangewood Villas, Cocoa, Florida is still underway. The data has already proven valuable in reviewing outputs from TARP. Much additional information is needed to improve the confidence that can be applied to the outputs of such programs with the addition of MAD algorithms. Recommendations on cooling strategies for architects and builders in hot, humid climates can be transferred with impunity only after such progress is made.

Acknowledgement

This project is supported in part by the Department of Energy through Brookhaven National Laboratory contract # BNL 119869-S. We thank Ralph Jones of BNL and Marvin Gorelick of DOE for their continued support of this project.

References

[1] Fairey, Philip et al., "Latent and Sensible Load Distributions in Energy Efficient and Passively Cooled Residences," FSEC-CR-125-85 Florida Solar Energy Center, 300 State Road 401, Cape Canaveral, Florida 32920

[2] CR-7 Operators Manual, Campbell Scientific, Inc. P.O. Box 551, Logan, Utah, 84321.

[3] Hayes Stack Smartmodem Owner's Manual, Hayes Microcomputer products, Inc., 5835 Peachtree Corners East, Norcross, Georgia, 30092, 1981.

[4] Mayday + 6C Manual, Sun Research, Inc., Box 210, New Durham, N.H. 03855.

[5] "Calibration Certificate," Swissteco Instruments Stegweg, Eichenwies, Switzerland, through Science Associates, Inc., 230 Nassau St., Box 230, Princeton, N.J.

Alternate Methods to Acquire Energy Usage and Occupance Data

Ken J. Gadsby and David T. Harrje
Center for Energy and Environmental Studies
Princeton University
Princeton, New Jersey

Richard A. Grot
National Bureau of Standards
Gaithersburg, Maryland

Abstract

The concerns of those involved with monitoring energy usage and occupant-related events must extend from sensor choice through conditioning equipment to the monitoring equipment. For many application standard "combinations" are available covering a wide range of prices. For other applications one must resort to original solutions carefully keeping the end goals in mind. This paper discusses a variety of such solutions that are intended to serve as examples of what might be used to solve the next sensor - interface - monitoring challenge.

Introduction

Often the difference between success and failure of a monitoring project is the ability to choose the correct sensor and the way in which the sensor interfaces with the data acquisition system. Normally, one of three functions must be performed by sensor and data acquisition.

- Analog value recording, a variable voltage corresponding to a variable pressure is an example.

- Counting events, the number of pulses per minute from a revolving cup anemometer wind sensor is an example, and

- The time for an event, how long has the furnace been on during the past hour is one example.

To accomplish these tasks in a field study can involve a variety of compromises and ingenuity to get the job done. This paper reviews some of the methods used in a variety of field and laboratory situations with which we have been associated.

Measuring Electric or Gas Use

Clearly when commercial remote readout heads are available for gas meters or pulse output meters are available for electric meters, one need only make routine checks to make sure the sensor-to-recorder match is compatible. In the case where standard commercial solutions are not available, or where long delays can be incurred, one can make use of such techniques as an infrared beam, reflecting to a sensor, to pick up cyclic information from the dials or airy disks of the meters. A cardinal rule is that one cannot interfere with the billing meter, but one can use a "Y" connection with the billing meter on one leg of the "Y" and the dedicated energy meter on the other leg. See Figure 1 for meter alteration using infrared sensor and counter.

Any systems using switch closures should be checked for switch bounce, that is multiple after counts, to guarantee that false counts do not occur.

Door and Window Opening

The simplest approach to evaluate when door and window openings take place is to use magnetic switches similar to those used for home security (see Fig. 1). However, additional information may be desired, and depending on the type of window or door, one can use a potentiamenter mounted on a casement window or door hinge to provide a resistance value, or voltage, proportional to the opening, or a multi-turn potentiometer with spring return in which the cable windout is proportional to the window or door opening.

Furnace, Boiler and Appliance Operation

Furnace or boiler operation related to fuel supply "time on" at a fixed gas or oil flow rate can be measured by a simple clock arrangement. Monitoring performance by a

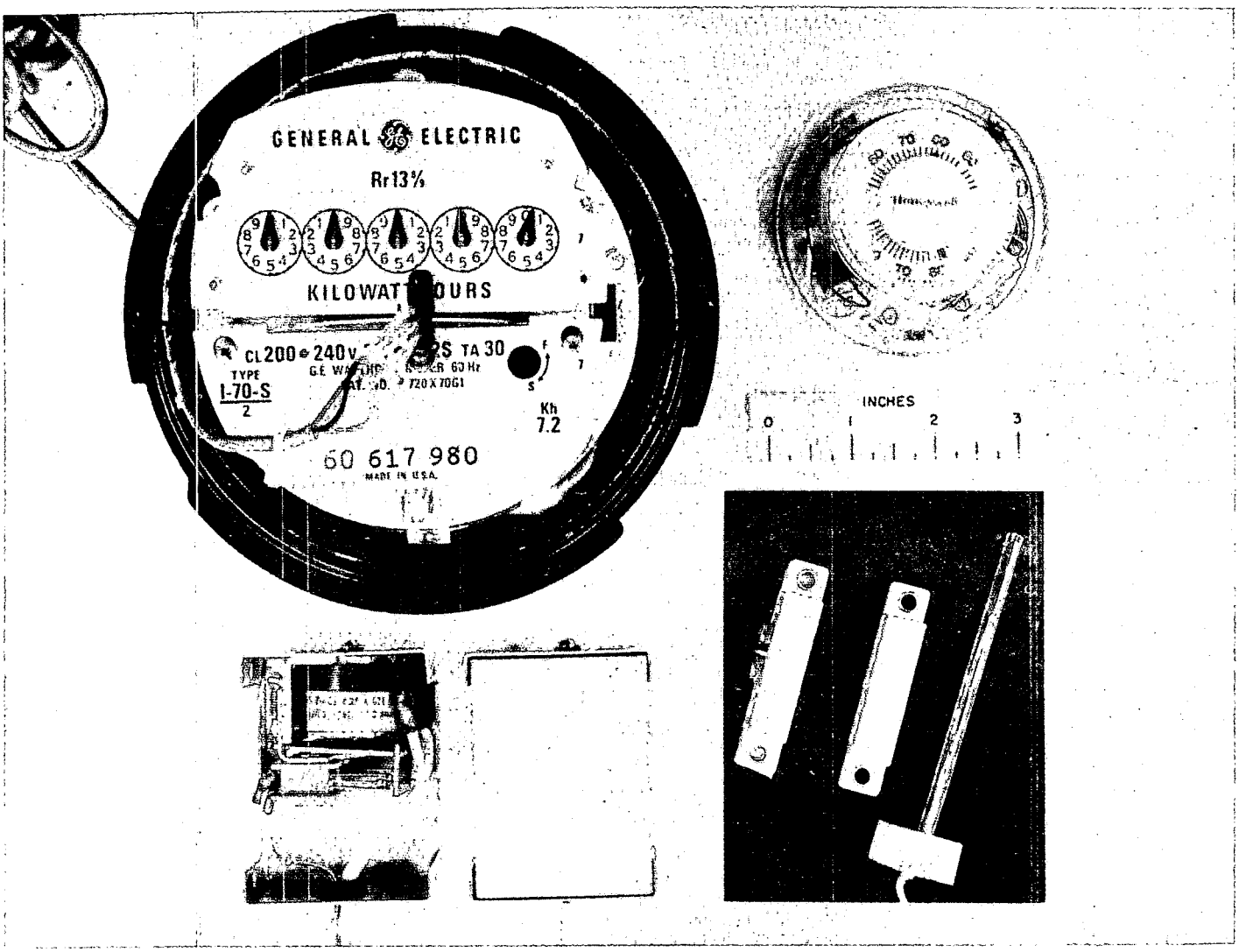

Figure 1. Sensors. Clockwise from upper left: adapted watt-hour meter, adapted thermostat, thermistor, magnetic switches, dual water-heater relays.

microcomputer usually means a central clock function is already available. Operation of the furnace fan or perhaps even the hot water line pump may also be directly related to energy use of the central heating system but this must be checked carefully before assuming a proportional relationship.

Appliance operation often poses more difficult monitoring problems. Multi-functions such as multiple ovens, range and stove top burners, or compressors, fans and other energy consuming components can be part of range or refrigerator operation. If a high level of detail is needed, then the appliance must be submetered. If less detail is needed, temperature or optical sensors may be employed to disaggregate the energy use in an approximate way. For example, sensing temperature changes to evaluate when the oven portion of the range is in use.

To add up the total use per hour, one technique we have used was small electric motor-driven potentiometers. Whenever the appliance to be measured was "on", so was the potentiometer motor causing the potentiometer resistance to change at a known rate. Interrogation revealed total "time on" per time interval for monitoring. With a microcomputer in the system all of these tabulations can be done with appropriate software using the internal clock and a dedicated address to keep track of an individual item.

Condensate Flows

Measuring air conditioner performance, it is necessary to know how much condensate has been "wrung out" of the building air. One approach is to use a tipping bucket, i.e., a liquid measurement system such as that employed to measure rainfall in weatherstations.

Thermostats

The key role that the thermostat plays in the use of space conditioning energy makes it a likely candidate for evaluating energy usage and occupant activities. Today's thermostats with their increased reliance on electronics may have contacts where temperature settings can be directly measured. In our studies we modified conventional wall thermostats as shown in Figure 1 adding a linear resistor (surgically removed from a standard potentiometer) and wiper so that any thermostat adjustment could be instantly recorded. What was interesting was comparing measured changes in settings with statements from the occupants.

Air Flow in Ducts

One problem in duct flow measurement is assuring what is the average flow rate across the duct (i.e., free from erroneous reading because of flow nonuniformities). In circular ducts we have used inexpensive, light-bladed fans which freely revolve in the duct air flow. Bearings were designed to maintain even tension over the large temperature variations in ducts used for both cooling and heating (50 - 150°F). The fan rotational speed was measured with photo-coupled modules, where the infrared beam was chopped by a series of holes in the rotating fan assembly to cause an appropriate pulse rate. Proportionality was excellent between pulse rate and flow rate based on laboratory tests.

Solar Measurements

A wide variety of sensors is available for solar measurements which may include direct or indirect sunlight readings. Depending on the demands of the monitoring project, less expensive, order of $100 units can be used in place of the $600 variety. Solar energy again involves accumulation (integration of the instantaneous values) rather than instantaneous data which can be very misleading. Again the microcomputer can perform this function rather than purchasing separate integrating units which were necessary in the past.

Temperature Measurements

In most of our measurement projects we have preferred thermistors for temperature measurements. Thermistors are a very accurate way of measuring temperature (to tenths of a degree F), especially if the on time is brief to avoid "self heating" of the sensing tip. The wiring for the thermistor is extremely simple. Using the thermistor in a plastic tube for support allows it to be suspended in the appropriate locations inside and outside the building (see Figure 1). Pressed tightly to the outer wall of a pipe, with flowing fluids, covered by an insulation over warp, the thermistor does a fine job of fluid temperature measurement.

Compatibility of system components may dictate the choice of temperature sensor. In the power line carrier (PLC) systems we are currently using in multifamily buildings the choice has been RTD or platinum resistance.

Roundoff errors using a 7 bit A/D converter may be as large as calibration errors in such PLC systems. Modifying the circuitry to increase resolution by a factor of two, and to account for possible differences between AD590s was desired. Insertion of precision resistors to make adjustments is necessary, otherwise the resistance change with temperature may equal or exceed that of the sensor. Use of selected resistors can change the temperature span so that room temperature measurements may be limited to the room temperature $\pm$ 15°F and DHW temperature to a similar small range. Limiting range means that

individual temperatures can be recorded more precisely.

Humidity Measurements

Much of our sensor checkout activities in the past year or so has been devoted to air moisture measurements. One of the concerns has been attic conditions, where freezing, dusty, and 100% RH conditions greatly limit the sensor choices. Laboratory checkout has proved very revealing. Only in the last two months have we heard rumors of accurate, rugged, low cost (~ $100 per sensor) units. Three or four times that cost has been necessary to purchase present sensors that we would deem suitable.

Flow Measurements in Hydronic Systems

Measurements in the piping systems of the multifamily buildings requires expensive plumbing and valving arrangements to introduce the flow measurement sensors. We have chosen the paddle wheel type flow meters based on cost and range of measurement. Our desire was to choose a nonintrusive method but unless bubbles or significant quantities of particles are present the doppler methods would appear to exhibit great uncertainty (i.e., giving output one minute but not the next).

General Considerations

One must always expect the unusual occurrence. Sensors and conditioning equipment that act as miniature "sending sets" causing difficulties in occupant's radio or TV equipment. Portions of the wiring acting as an antenna can bring commercial radio interference to the data acquisition system. High frequency voltage spikes on the incoming 120 V lines (because of a utility switching functions) can cause strange signals in the data recording. The problems of dedicated phone lines when electrical storms take place is another uncertainty. The question of line lengths between recording equipment and sensors can result in resistance and capacitance effects that may directly influence the readings.

These are just a few of the problems that can occur. All have solutions but one must first be aware of the problem. Again checkout of the system from sensor to recorder and playback is a must.

Conclusions

The sensor-conditioning-data logging sequence should be thoroughly thought out for each application. Calibration should involve all the components in the path to accurate data recording. The environment experienced by all components should also be taken into account. High relative humidity or temperatures may result in a shift in calibration values. Even nonlinear ranges may be accommodated by microcomputer-based data logging system thereby extending the ranges of sensor application. There are many instrument system designs to solve any given instrumentation/monitoring problem, often with vastly different costs and ranges of flexibility. Our experience embraces but a small fraction of the total spectrum of instrument systems, but hopefully, these observations may add some insight to the type of challenges involved.

Acknowledgements

The authors wish to acknowledge the support of the United States Department of Energy, Building Systems, Conservation and Renewable Energy, who have supported this research under contract No. DE-AC02-77 CS20062 in the past and under grant No. DE-FG01-85CE24422 at present.

Bibliography

1. Hall, S.A. and Harrje, D.T., "Instrumentation for the Omnibus Experiment in Home Energy Conservation", Princeton University Center for Energy and Environmental Report No. 21, 1975.

2. Grot, R.A. and Galowin, L.S., "Preliminary Data on the Field Performance of Storage-Type Residential Water Heaters", National Bureau of Standards Report NBSIR-78-1496, 1979.

3. Grot, R.A. and Harrje, D.T., "The Transient Performance of a Forced Warm Air Dust System", ASHRAE Transactions, vol 87, Part 1, 1981 pp. 795-804.

4. Harrje, D.T., Monitoring Energy Use - What is Needed?" American Council for an Energy Efficient Economy (ACEEE) Summer Study, Santa Cruz, CA, 1982.

5. Harrje, D.T., DeCicco, J.M. and Kirkpatrick, D.L., "Optimizing Building Control Strategies Using Short-Term Energy and Comfort Monitoring", Clima 2000, VVS Kongres - VVS Messe, Copenhagen 1985 pp. 7-12.

6. Harrje, D.T., Grot, R.A. and Gadsby, K.J., "Levels of Energy Monitoring in Houses", Proceedings of the Conference of Comparative Experimentation of Low Energy Houses, University of Liege, Liege, Belgium, 1981.

7. Saving Energy in the Home (Ed. Socolow, R.H.), Ballinger Publishing Co., Cambridge, MA, 1978 also Energy and Buildings - Special Princeton Issue, Vol 1, No 1, 1978.

Instrumentation for Evaluating Integrated Lighting System Performance in a Large Daylighted Office Building

Mashuri Warren, C. Benton, Rudy Verderber, Oliver Morse, and Steve Selkowitz
Applied Science Division
Lawrence Berkeley Laboratory
Berkeley, California

J. Jewell
Energy Services Department
Pacific Gas and Electric Co.
San Francisco, California

INTRODUCTION

Electric lighting consumes 30 % to 50 % of the electrical energy used in large commercial buildings, and has additional significant impact on cooling energy requirements. The integration of daylighting with electric lighting to provide ambient illumination with task lighting provided separately at each workstation is an attractive strategy for energy conservation. Energy savings come from proper control of the electric lighting system in response to available daylight. Building level energy use measurements are generally insufficient to identify how well a building is operating. Detailed measurements of specific energy uses are needed to understand how a particular building system is operating.

This paper describes instrumentation that was used to monitor the electrical energy consumption and illumination levels in a recently completed 50,000 m^2 office structure located in the San Francisco Bay Area. Interfacing of the temperature, electrical, and illumination measurements to the dataloggers will be described. Data acquisition in this occupied building presents several challenges: the need to make measurements quickly; minimal disturbance to occupants from equipment and wiring; four quite different daylighting zones separated by large distances; and a limited budget. We give a brief description of the building and the issues to be addressed by this monitoring project. We shall then describe the instrumentation installed in the building to measure both lighting levels and electric power consumption. Finally, we present and discuss the typical results that can be obtained with this instrumentation.

This work has been supported by the Energy Services Department, Pacific Gas and Electric Co. under agreement BG 83-42 and by the Assistant Secretary for Conservation and Renewable Energy, Office of Building Energy Research and Development, Buildings Equipment Division of the US Department of Energy under Contract DE-AC03-76SF00098.

THE BUILDING

The instrumentation of the building offers a valuable opportunity to examine performance data of a building that includes a number of innovative daylighting features. The building represents a major experiment in the use of daylighting by a large US corporation in which the owner hopes that daylighting will significantly reduce energy consumption and improve employee productivity. The building is a 46,000 m^2 (500,000 ft^2) office building housing over 3,000 technical personnel engaged in engineering tasks.

Daylighting related criteria played a major role in the design of the building. The rectilinear mass of the building was elongated on an east- west axis producing major fenestration surfaces facing roughly north and south. The building actually faces about 25 degrees west of south. A majority of the building functions that lack a strong relationship to daylighting, such as, computer facilities, conference rooms, rest rooms, copy rooms, etc. are grouped into explicit core groups. The cores were designed with opaque surfaces and placed on the east and west ends of the building to mitigate the adverse radiation impacts associated with these orientations.

Central Atrium.

Realizing that even the most effective perimeter daylighting system could not project light more than about 12 m (40 ft) into the building, the architect designed an atrium as a strategy to provide natural light to the building's large interior zones. The atrium became a major organizing feature of the building. The spaces adjacent to the atrium have natural light with a strong downward component. Light from the overhead atrium glazing ranges from a strongly diffuse character on the south side of the atrium to directional light transmitted through the translucent atrium glazing to the north side of the atrium. On both sides of the atrium, light levels diminish as the distance from floor level to atrium roof increases and as the angle between that floor and the roof becomes more acute. A section view of the building is shown in Figure 1.

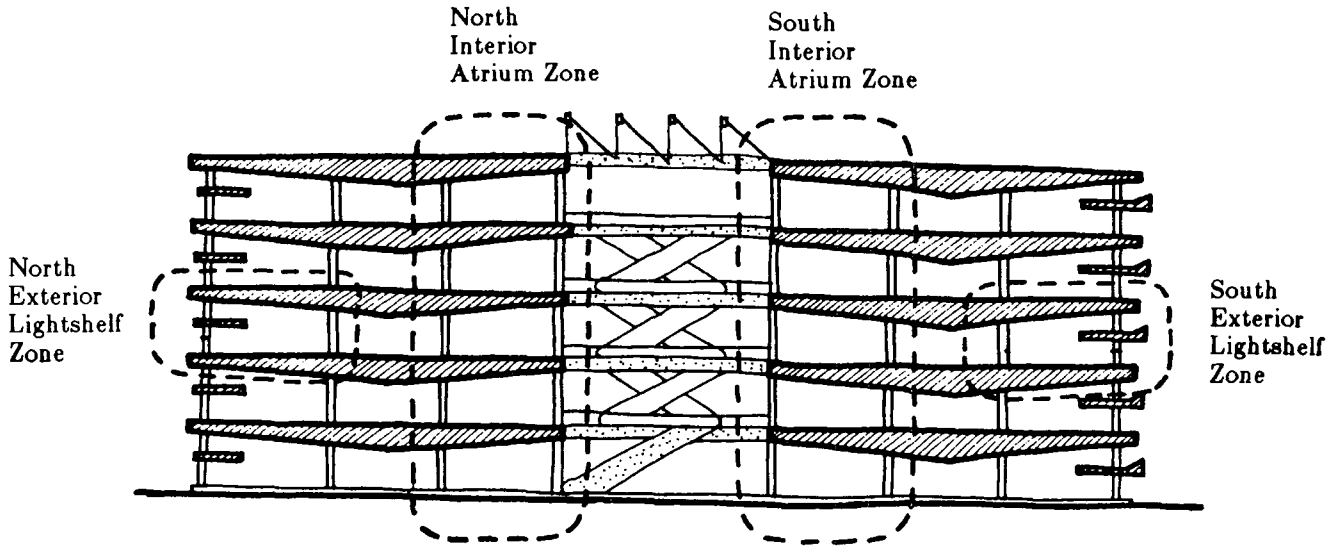

Figure 1. Section through the building showing the four daylighting zones under study: the south exterior lightshelf, south interior atrium, north interior atrium, and north exterior lightshelf zones.

Exterior Light Shelves.

Because of the large open plan, the daylighting strategy requires a substantial penetration of daylight from the exterior fenestration to the building's interior spaces. To increase the depth of this penetration the designers established a fairly radical floor-to-floor dimension of 5.5 m (18 ft). To prevent glare from the exterior glazing, large lightshelves along both north and south facing exterior walls. The lightshelves are horizontal interior elements located about 2.3 m (7.5 ft) above the floor extending from the exterior glazing inward for a distance of 4 m (13 feet) as shown in Figure 2.

Each floor of the building has a sloped ceiling plane. The ceilings, built with standard modular ceiling materials, are sloped to effectively intercept and reflect illumination directed inward from the lightshelves. Through the year this zone receives light from the region above the lightshelf that has a strong horizontal component as it is reflected into the interior.

Spaces associated with the south side exterior wall are exposed to high levels of natural light with the presence of beam daylight during winter months. The south side of the building has an additional exterior lightshelf reflector. As a further measure against glare, and unwanted winter solar gain, the glazing below the lightshelf has a relatively low transmittance (18% on the south side and 40% on the north). The north side exterior wall is primarily exposed to diffuse sky vault radiation. The interior light distribution takes on a character associated with this sideward diffuse light.

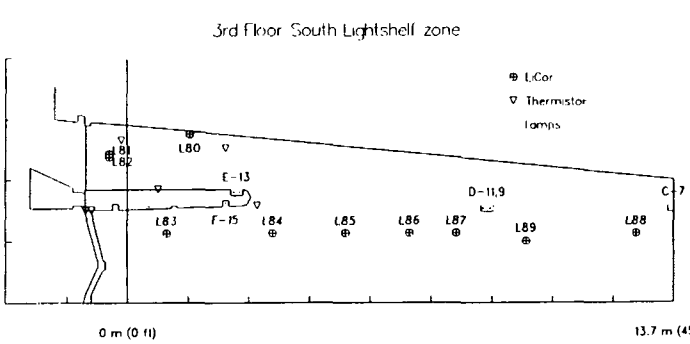

Figure 2. Section of the South Exterior Lightshelf zone (third floor) showing the positions of illumination sensors, temperature sensors, light fixtures (C, D, E, & F), and electric lighting circuits (7, 9, 11, 13, & 15).

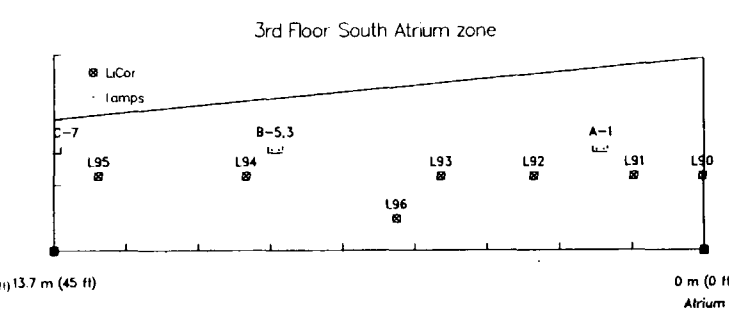

Figure 3. Section of the South Interior Atrium zone (third floor) showing the positions of illumination sensors, light fixtures (A, B, & C), and electric lighting circuits (1, 3, 5, & 7).

Electric Lighting System.

Separate systems provide ambient and task illumination. Ambient illumination, the light used for circulation and casual tasks, is provided by indirect fluorescent ceiling fixtures and supplemented by available daylight. Task lighting is provided by fixtures built into each individual's workstation. These fixtures are under the individual's control and illuminate the work surface.

The electric lighting system was designed to produce and maintain an ambient illumination at a target levels of about 350 lux (32 fc) supplemented by daylighting. The design light output based on measured power and fixture distribution is about 0.9 W/ft^2. Projected to the entire building this would give a design electric power consumption for ambient lighting of about 450 kW. The electric lighting system has two types of control: on/off; and continuous dimming. The on/off control of each bank of fixtures is tied to a computer control system that sweeps the lights off at regular intervals during periods of low occupancy. Occupants can manually restore the lights during these periods.

The electric lighting system uses fluorescent fixtures with continuously dimming ballasts controlled by photocells. This permits the electric light to be reduced in direct proportion to the available daylight. The lighting system is specified to dim the lights from 100% to 15% of full light output. Measurements indicated that the minimum dimming level is about 22% of full light output. Photocells are used to sense the light entering the building. There is a photocell sensor for each row of fluorescent fixtures. All of the exterior zone dimming system sensors are grouped together underneath the lightshelf. The interior atrium zone dimming system sensors are located on the ceiling about 3 m (10 ft) from the atrium. Open loop control is employed in which the sensors are remote from the area of control. In principle it is possible to adjust the gains on each control circuit to represent the daylighting contribution to the ambient illumination level at that row's position, however, this requires careful adjustment. The original specification placed downward looking sensors to directly measure the illumination near each fixture to provide feedback control.

The building design is strongly driven by daylighting criteria. During much of the daytime, daylighting provides nearly all of the ambient lighting needs throughout the entire area. The architect projected a 80% decrease in electric power consumption for ambient lighting during daytime hours. This project is directed toward answering questions about the efficacy of its daylighting features.

INSTRUMENTATION

The instrumentation program was designed to collect data at four different locations in the building with different daylighting characteristics: The south lightshelf zone, the south atrium zone, the north atrium zone, and the north lightshelf zone. The lightshelf or exterior zones on the north and south sides use a horizontal array of illuminance sensors, as shown in Figure 2, which could be on any floor. There is very little difference from floor to floor on the external facades. For the purposes of this study the third floor was selected as a typical floor. The atrium or interior zones are represented by vertical profiles along either side of the atrium and include sensor locations for a short distance into each floor, as shown in Figure 3. The initial measurement program was designed to move the data acquisition equipment from one daylighting zone to the next.

The instrumentation of an existing facility poses some interesting technical challenges. Minimum disturbance of occupants and the orderly installation of sensor wiring are major practical criteria for this type of data acquisition effort. The instrumentation program had the following objectives:

1. Evaluate the dimming control system by recording power consumption and ambient light levels during the building's daytime working hours.
2. Establish illuminance profiles in the building interior for different weather conditions. Collect data showing the combined effects of daylight and electrical ambient lighting during the weekdays. Measure the daylight component when the building is unoccupied. Measurements were made across the width of the building from the exterior skin to the atrium.
3. Measure the lightshelf luminance as an indicator of daylighting resource, including a profile of the light shelf's average luminance as seen from above.
4. Measure the air and surface temperatures in the space above the lightshelf. This data relates to the thermal loads occurring in this space.

The instrumentation system was based on a series of four battery powered, decentralized dataloggers. The use of four Campbell Scientific CR-21 dataloggers provided relatively short runs of analog sensor wiring and increased system flexibility in routing those wires. The CR-21 system features 7 analog inputs with slope and intercept scaling and signal conditioning within user selected input ranges. The devices use 12 bit analog to digital converters and archives several types of data (averages, minimums, maximums, standard deviations, etc.) at user selected time intervals. The sensors were polled once a minute with averages stored on tape cassette every 15 minutes. Minimum, maximum, and standard deviations were recorded on an hourly basis. For some detailed measurements, one minute data was stored for brief periods.

The dataloggers were used to poll the following types of sensors:

Illuminance	LiCor 210S photometric sensors measured as a voltage source by the addition of a 1%, 5,110 ohm resistor across the LiCor's leads.
Temperature	A CSI Model 101 thermistor calibrated to an standard input program in the Campbell Scientific's signal conditioning options
Electrical Power	Ohio Semitronic Model PC5-59C AC watt transducers read as a DC output voltage by the dataloggers.

Illuminance sensors.

Illuminance sensors develop a current output. Each sensor has a factory provided calibration in the range of 20 μA/100 klux. To convert this current to a voltage, a 5,110 ohm resistor is placed across the LiCor output. The size of the resistor was chosen to give sufficient resolution at low light levels, but not exceed the range of the datalogger at the maximum illuminance levels. The datalogger had a resolution of 5 μV with a scale reading of from -2 mV to 25 mV. For example illuminance sensor, L83, had a calibration of 16.7 μA/100 klux. With a 5,110 ohm resistor this gives an output of 85.377 mV/100 klux, or 1172 lux/mV. The maximum signal that the datalogger can measure corresponds to about 29,000 lux. The resolution is about 6 lux compared to the target illuminance level for ambient lighting of 350 lux and is adequate for this application.

The datalogger automatically computes the light output in lux by multiplying the sensor reading in mV by a scale factor and subtracting an offset. In addition there was a limitation on the largest number, 6999, that could be stored in the datalogger. With the calibration factor in lux for ease of data analysis, this placed a limitation of 6999 lux, which is acceptable for the zone illuminance sensors. However, the sensor measuring the brightness of the lightshelf looking downward from the lightshelf ceiling, measured as high as 8,000 lux. The vertical sensors looking out the the lightshelf glazing recorded values up to 26,000 lux. Consequently, these higher values were recorded using a two 5,110 ohm resistors in parallel and the scale factors divided by 100. The range of values, both electrical and numerical, must always be carefully considered in interfacing sensors to the data acquisition equipment.

Sensor locations for measurement of the south side exterior zone were determined after site inspections including spot measurements with hand held instruments. These survey measurements indicated little variation in light level along the east-west axis of the building. In addition, the south side exterior zone exhibited little variation from floor to floor. Measurements made in the south side of the third floor were therefore considered representative of the south side exterior zone. LiCor photo sensors were mounted at a height of 1.72 m (68 inches) above the floor as a measure of ambient illumination. This was at the top of the office partitions and eliminated the shadows cast by the partitions and the other office furniture. Thirteen LiCor photo sensors were placed several feet apart across the width of open plan office as shown in Figures 2 and 3.

Datalogger No.1 was located on top of the south side lightshelf. From this location, short cabling runs connected the device to three illuminance sensors and four temperature sensors. The illuminance sensors were placed above the lightshelf in locations selected to represent the amount of natural light available to the daylighting system. As shown in Figure 2, two of the LiCor sensors, L81 and L82, were placed in a vertical plane immediately behind the clear lightshelf glazing. The two vertical sensors were separated by a horizontal flat black shield which caused the upper sensor to measure illuminance from the horizon line upward (the sky component). The lower vertical sensor measured illuminance from the horizon line downward (the reflected component), a view that included the exterior reflector mounted on the south side of the building. The remaining illuminance sensor, L80, was mounted on the sloped ceiling above the lightshelf with a downward view of the lightshelf's reflecting surface. This gave a measure of the lighting resource available from the lightshelf. Similar measurements were made for the north side exterior zone lightshelf; however, the north-side does not have the exterior reflecting surface.

Datalogger No.2 was connected to a series of LiCor illuminance sensors, L83 through L89, that stretched along a cross-section line from the south exterior wall to the south side's centerline corridor. These sensors, the datalogger and their associated wiring were mounted on top of the open plan office partitions. A similar deployment of Datalogger No.3 produced a partition height profile of illuminance from the centerline corridor to the south edge of the atrium, L90 through L96, as shown in Figure 3.

Electrical Power Transducers.

The fourth datalogger, recording power consumed by the indirect electric lighting system, measured branch circuits supplying lighting fixtures across the width of the building's south side. Specific electrical lighting circuits were interfaced to the dataloggers using watt transducers as shown in Figure 4. Datalogger No.4 was located in the south side's third floor electrical closet and was used to poll the eight watt transducers connected to the electrical lighting circuits 1, 3, 5, 7, 9, 11, 13, and 15. Because only seven sensor channels were available on the datalogger, the signal from the transducers circuits 3 and 5, representing the double row of fluorescent tubes in the light fixture in the middle of the south atrium side were combined in series. The datalogger and the watt transducers were mounted in a custom enclosure to eliminate any shock hazard for building staff. The rows of fixtures, designated A through F, and circuits monitored are shown in figures 2 and 3. The positions of the lighting sensors are also shown in the figures.

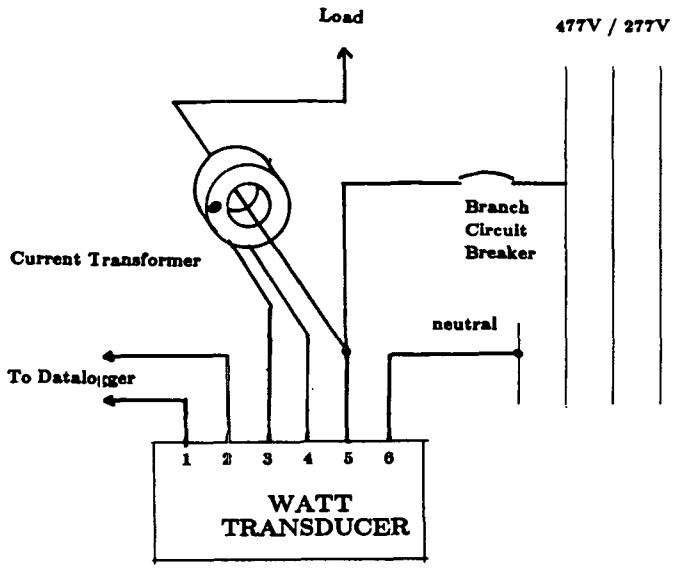

Figure 4. Watt transducers are connected to each of the lighting circuits in the area under study.

Temperature Sensors.

Datalogger No.1 on top of the south side lightshelf also had four temperature sensors placed in representative points at the top, bottom, entry and lower surface of the lightshelf cavity. These are indicated as inverted triangles on Figure 2. These provide information regarding the thermal behavior of the lightshelf.

Data Capture.

The data collected by the Campbell Scientific CR-21 dataloggers was stored on a cassette tape recorder integral to the Campbell system. Our standard procedure for recovery of the data involved reading these cassette tapes in the field. A portable Compaq microcomputer was taken to the building and used with a Campbell C-20 cassette interface to download the Campbell data files to IBM format floppy diskettes. The data tapes were then reconnected to the datalogger to store additional data.

The data collected by this procedure left the building as a standard ASCII format files in Campbell data format. From this form it was reduced using a series of microcomputer programs. The data reduction process, outlined in Figure 5, began with data in a standard Campbell data format which mixed different data types (averages, standard deviations, minimums, maximums, times of occurrence, etc.) in files containing up to two weeks data from one of the Campbell dataloggers. A program, written specifically for this project, was used to reformatted the data from the Campbell file format into individual files by day and data type. The data were then inspected using an editor and reassembled into contiguous multi-day blocks which were still separated by data type. A analysis of the data was conducted using database and spreadsheet programs. REFLEX, a relatively powerful database management from Analytica Corporation, is adept at providing rapid statistical summaries of the data while providing a series of filters for the isolation of data subsets. The data was also examined and plotted using the 123 spreadsheet program from Lotus Corporation.

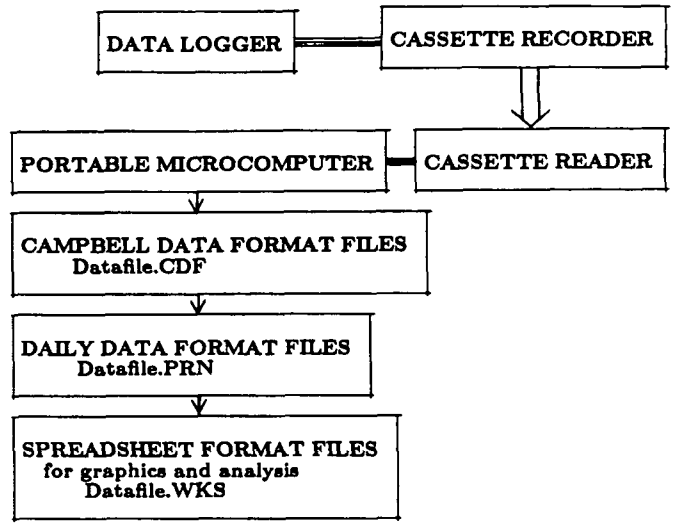

Figure 5. Data Reduction Procedure. The data from cassette tapes is converted to Campbell format data files. These files are separated by day and data type and converted to database and spreadsheet files.

Other Available Building Data.

In addition to the data from our monitoring of the building, other data in the form of daily manual readings of main electrical power circuits and hourly and daily readings from the energy management system were available to fill out the picture of building operation. Hourly energy use data for both the total building electricity usage, and the submetered circuits for ambient lighting, and fans were obtained and plotted. Estimates of the annual building electrical were also obtained.

The data were obtained on hardcopy printouts and was manually entered into spread sheets for analysis and plotting. Because only a small sample of data was analyzed the manual data manipulation was acceptable. However, for longer term analysis procedures should be developed to capture the data in a computer readable form.

RESULTS

Illuminance measurements.

As an example of the type of information that can be obtained from this limited instrumentation, several examples of performance analysis are given. The detailed performance of the building was examined using data measured on the south side of the third floor during a nine day period beginning with 20 May 1985 (day 140) and ending with 28 May 1985 (day 148). This period includes a set of typical sunny business days and a pair of cloudy unoccupied weekend days.

The illuminance in the south side lightshelf zone for a typical bright occupied day in May (day 140) is shown in Figure 6. The illuminance levels reported are the sum of daylight and electrical light components. The electrical lighting system has been measured at approximately 225 lux at full light output. Each curve represents the illumination at a different distance from the exterior of the building. Illuminance levels during occupied hours stay well above the 350 lux target level in the middle of the zone as indicated by sensors L84, L86 and L88. The lowest illuminance levels were measured by sensor L83 beneath the lightshelf. The windows below the lightshelf are of low transmittance glass (<20%) to reduce glare and to reduce heat gain during winter months. This area receives little contributions from daylighting.

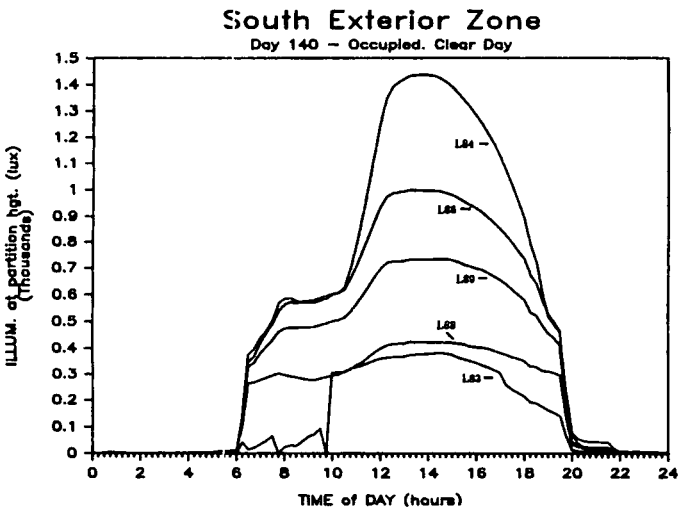

Figure 6. Illuminance South Exterior Lightshelf Zone for Day 140 as measured by illuminance sensors: L83 under lightshelf; L84 in 15 ft; L86 in 25 ft; L89 in 33 ft; and L88 in 42 ft.

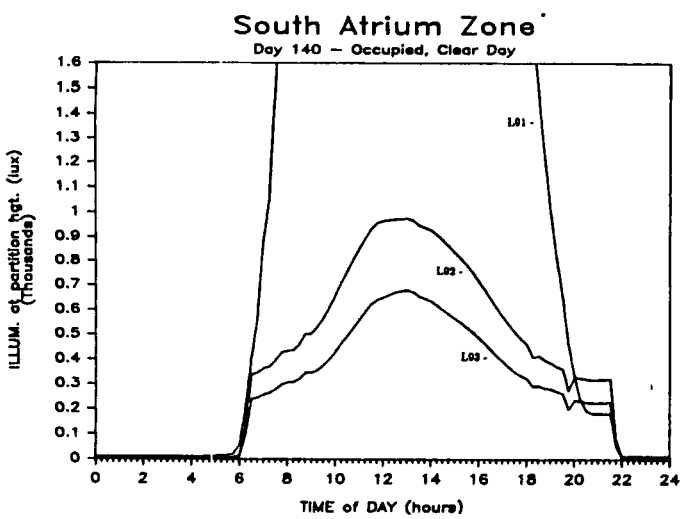

Figure 7. Illuminance South Interior Atrium Zone for Day 140 as measured by illuminance sensors: L91 in 5 ft from atrium; L92 in 12 ft; and L93 in 18 ft.

The light levels on the third floor south atrium zone on this same bright, occupied day are shown in Figure 7. The illuminance at sensor L92 (12 feet from the atrium edge) and sensor L93 (19 feet from the atrium edge) peak near 1000 lux and 700 lux respectively. Sensor L91 (5 feet in from the atrium edge), with a view of the atrium roof, has illuminance levels exceeding 1600 lux. While these illuminance values include some electrical lighting, they also exceed the target illumination by a comfortable margin. The contribution of daylighting to ambient illumination over most of the floor area in both the atrium and lightshelf zones stay well above the 350 lux target load. One would anticipate significant reduction in electrical lighting power consumption during these sunny days.

Figure 8 shows the ambient illumination levels on the south side of the third floor on a cloudy day. This data was collected on an unoccupied day with the electrical lights off. While the daylight levels are much less, compared to a sunny day, a large portion of the floor exceed 350 lux during a large part of the day. In fact, nearly the entire floor is illuminated most of the day at a level of 150 lux. Thus, even on a cloudy day one would expect the electrical lights should be dimmed by a significant amount.

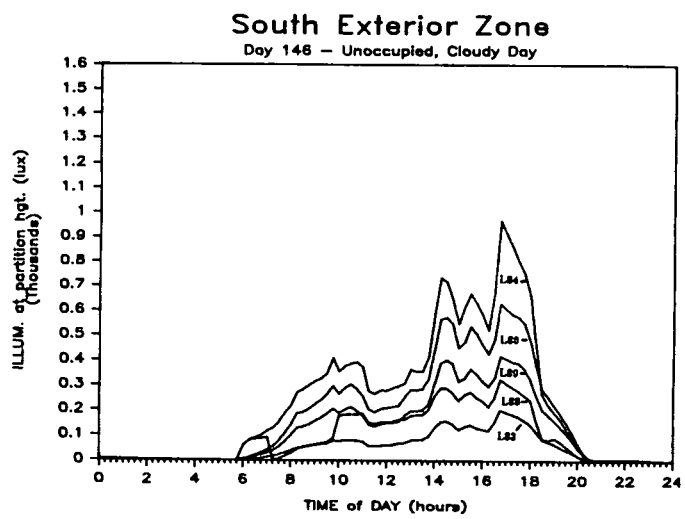

Figure 8. Illuminance South Exterior Lightshelf Zone for Day 146 as measured by illuminance sensors: L83 under lightshelf; L84 in 15 ft; L86 in 25 ft; L89 in 33 ft; and L88 in 42 ft.

Light Shelf Illuminance.

Three illuminance sensors have been deployed on the south lightshelf to measure the illuminance resource as shown previously in Figure 2. L80 is at the lightshelf ceiling, looking downward and provides a measure of the brightness of the lightshelf. L81 and L82 look outward through the exterior glazing. L81 is a illuminance sensor pointing outward and mounted adjacent to L82 that is masked so that it receives illumination from the horizon plane downward. L82 is a illuminance sensor pointing outward that is masked to receive illumination from the horizon plane upward, a view that includes the south side exterior reflector.

The brightness of the lightshelf as measured by the downward looking sensor L80 has a good correlation with the daylight in the space. Figure 9 shows the relationship between interior illuminance just beyond the lightshelf as measured by sensors L84, and ceiling brightness at the lightshelf as measured by L80 for 9 days of data in May. The data set includes unoccupied weekend hours and shows two curves separated by 250 to 300 lux depending on whether the electric lighting system is on or off. The figure shows that for this time of year the illuminance exceeds the target value of 350 lux if the lightshelf brightness is greater than about 1750 to 2000 lux. Figure 10 shows the correlation between interior illuminance 33 ft from the window as measured by sensors L89, and ceiling brightness at the lightshelf as measured by L80. Again, the illuminance in the space is dependent on the illuminance of the lightshelf, though as one would expect, the illuminance level 10 m (33 ft) from the window is not as great as that near the lightshelf. The two distributions of data points represent the electric lights on or off.

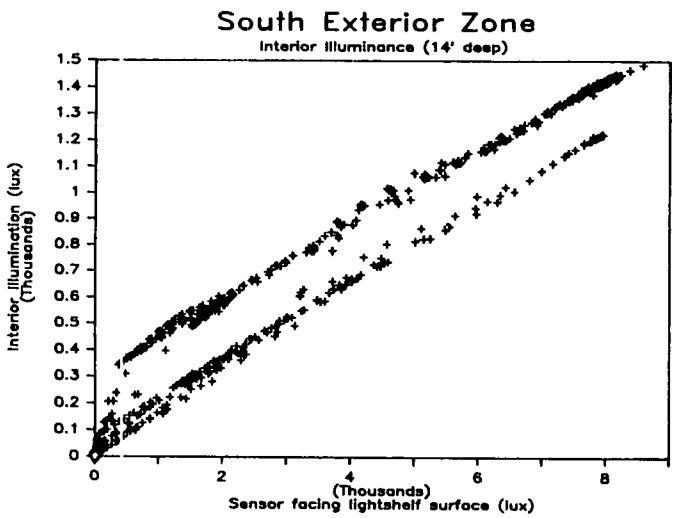

Figure 9. Interior Illuminance, L84, just beyond the light shelf 15 ft from the windows vs. Lightshelf Luminance, L80.

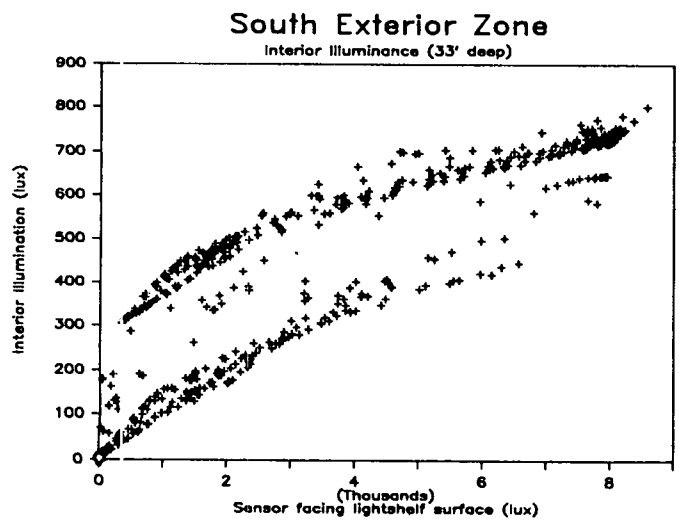

Figure 10. Interior Illuminance, L89, 33 ft from the windows vs. Lightshelf Luminance, L80.

The figure shows that the illuminance exceeds the target value of 350 lux if the lightshelf brightness is greater than about 4000 lux. For a specific time of year, there is good correlation between the daylighting brightness as measured in the space by sensors, L84 through L89, even over the daily variation in sun angle incident at the lightshelf. We hope to examine this correlation at other times of the year, particularly as we go to the low sun angles in the winter months.

Power Measurements.

Watt transducers have been installed to measure the electrical power consumption on both the north and south sides of the building. Figure 11 shows the electric lighting power consumption of the three lighting circuits 9, 11, and 13, on the south lightshelf zone on a clear sunny day in May. These circuits correspond to the two rows of fixtures, D and E, that are about 36 ft and 12 ft from the window. Each circuit has several sections that can be switched on and off independently. After 6 PM all of the lights, with the exception of emergency access lights are swept off about once an hour and can be turned on manually if employees are working late. This contributes to lighting energy savings. The power consumption curves show that the circuits are automatically turned on at 6 AM in the morning, partially turned off at 6 PM and 8 PM and completely turned off at 10 PM.

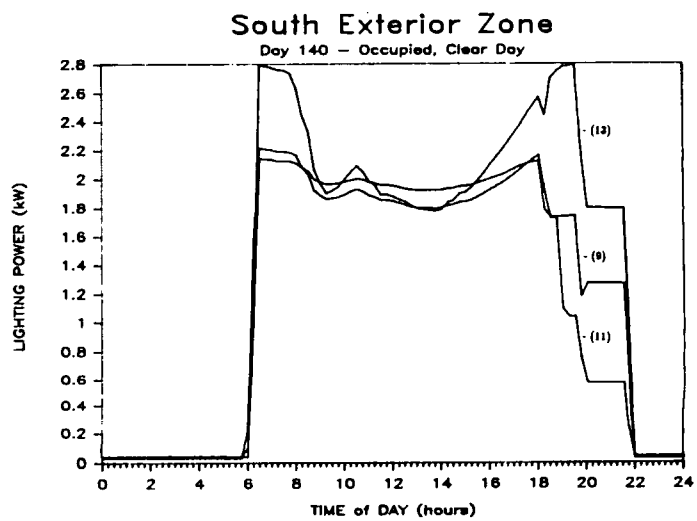

Figure 11. Watt Transducers - South Exterior Lightshelf Zone for Day 140 showing Circuit 13 in fixture E and Circuits 9 and 11 in fixture D.

During the day all circuits exhibit some dimming. Circuit 13, close to the window, dims by as much as 35% (2.8 kW to 1.8 kW) at noon. The other two circuits are dimmed, at most, by 18% (2.2 kW to 1.8 kW). The dimmers on circuits 13, 11, and 9 are controlled by photocells that sense the relatively dark space beneath the lightshelf and look through the tinted view glazing. Measurement of the illuminance levels in the space as discussed previously clearly indicate that daylighting is sufficient to reduce the electric lighting power demand to a minimum. Measurements of the dimming system

demonstrated that the power demand of the electric lights can be reduced by 73% to 27% of full power. At this power level the illumination level becomes about 22% of full light output. The lighting energy savings potential is not being achieved.

A scatter plot of the lighting levels in the space, as given by sensor, L84, against the electric power consumption by the lighting circuit (13) adjacent to that sensor, as shown in Figure 12, is instructive. With the lights on and no daylighting the illuminance levels are at the target of 350 lux and the electric power consumption is a maximum, 2.8 kW. As the illuminance level in the space increases to 1400 lux, the lighting power level drop to about 1.8 kW indicating some dimming. However, this is 4 times the target illumination level indicating poor response of the dimming system. There are also a group of points at about 1.8 kW at low levels of illuminance indicating that the lights in the vicinity of the sensor have been turned off, but that others on the same circuit are on.

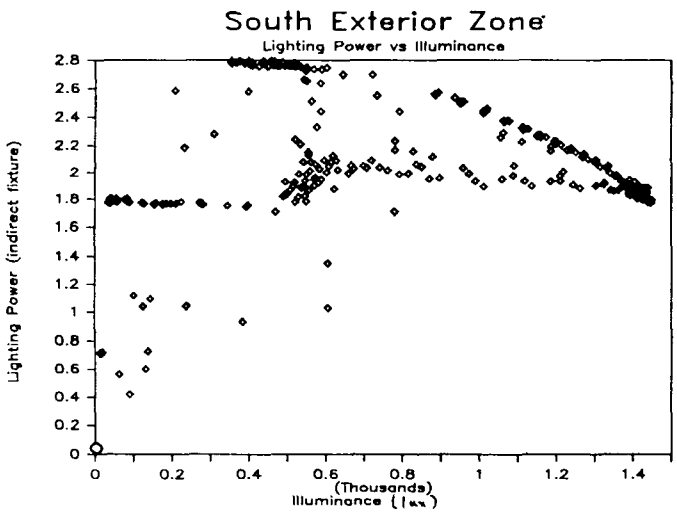

Figure 12. Illuminance, L84, 15 ft from the window vs. Lighting Power 13 in Circuit 13 showing some dimming.

When the lighting level in the space as measured by sensor L93, is plotted against the electric power consumption of circuit 3&5, as is shown in Figure 13, the dimming shows up clearly. Circuit 3&5 controls fixture B which is 30 feet from the atrium in the location that is least likely to dim. The lighting circuits adjacent to the atrium are controlled by photo sensors that are mounted in the ceiling near the atrium. This is the type of control that would be expected from a well operating control circuit. The illuminance level is held near 350 lux. When there is no daylighting, the electric power to the lighting circuit is a maximum at about 2.9 kW maintaining an illuminance level of about 250 lux. As the available daylighting increases the brightness of the space, the electric power gradually decreases to the minimum power consumption of the fixture, a load of about 26 % of full output. Daylighting above that value would then increase the illuminance level further, as indicated by the distribution of points at about 0.75 kW.

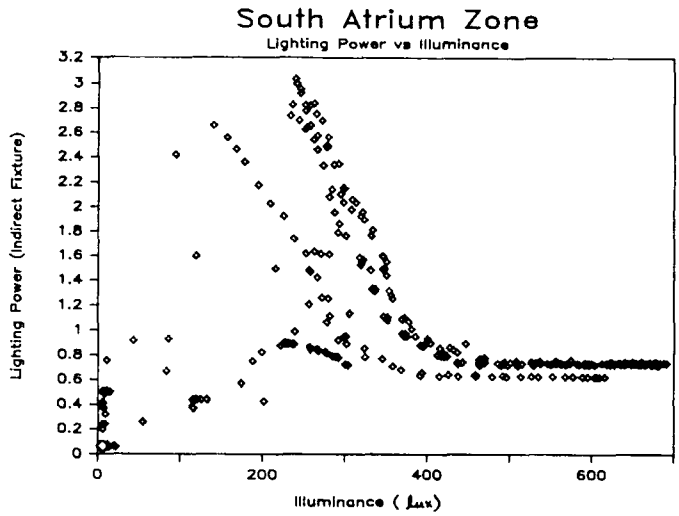

Figure 13. Illuminance, L93, 18 ft from the atrium vs. Lighting Power in Circuits 3 & 5 showing proper dimming operation.

These two figures, 12 and 13, demonstrate two responses of a dimming circuit to the available daylighting. Figure 12 demonstrates poor response while Figure 13 demonstrates good response. On surveying the dimming circuits on the third and fourth floors of the building we also found some circuits with no response. The instrumentation of the daylight sensor combined with the watt transducers has given us valuable information about the operation of the intergrated daylighting and electric lighting system. The data collected has allow us to evaluate the operation of the daylighting system over the south lightshelf zone. Similar analysis can be performed for the atrium zones, and north side of the building. The daylighting system provides light for large areas and long periods of time over the south lightshelf zone analyzed in this example. The dimming system is clearly not responding in most cases to the presence of daylight. The strong correlation between the illuminance at the top of the lightshelf and the illuminance in the space suggests that this may be a more effective position for the photo sensors that control the dimming of the exterior lightshelf zone electric lights.

Total Building Performance.

Potential annual energy savings can be estimated by considering the total building electrical energy use, as well as the fraction of energy used in electric lighting. The total electrical demand is shown in Figure 14, and is based on summing the hourly demand of the various major meters: 1A, 1B, 2A, 3A, and 4A. These readings were accumulated and stored on an hourly basis by the energy management system and printed out daily. Comparison of daily manual readings of the main utility circuits show good agreement. Peak building electrical consumption is about 1,600 kW with a continuous load of

about 700 kW. The total building load is quite consistent from day to day. As a gross building area of 46,000 m^2 (500,000 ft^2), the building peak electric power consumption is about 34 W/m^2 (3.2 W/ft^2). The continuous building load is about 15 W/m^2 (1.4 W/ft^2) which probably represents computers, fans, and other equipment that are on 24 hours a day.

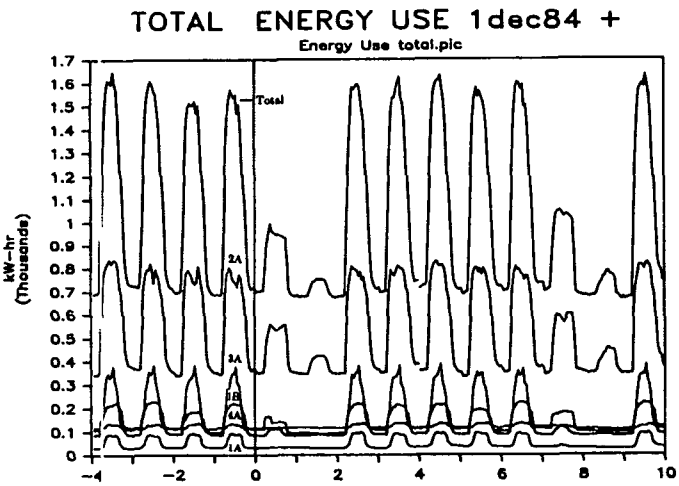

Figure 14. Hourly electrical energy use for the total building and main meters (1A, 1B, 2A, 3A, & 4A) for the period 3 December 1984 through 10 December 1984.

Based on 325 days of manual readings of the main utility circuits (1A,1B,2A,3A,4A) the annual building electrical energy consumption is estimated to be about 8,660,000 kW-hr/yr. The total energy use consists of baseload at about 700 kW for 8760 hours a year plus and additional 900 kW of demand for about 54 hours a week. This gives an electrical energy use about 17.3 kW-hr/ft^2-yr (59 kBtu/ft^2-yr). This does not account for chilled water usage for cooling.

The major ambient lighting load is on a submetered circuit, LK8, of meter 2A and was measured for a period at the beginning of December 1984. The task lighting is on a separate circuit. The peak electrical lighting load based on circuit LK8 is about 410 kW with a significant dip to about 330 kW around noon on Wednesday, Thursday, and Friday of the first week. Only the lighting circuit shows this noon-time dip of about 20%. The night-time electric lighting load on his circuit is about 70 kW which probably represents emergency lights. There is also a much smaller lighting load that is a submetered circuit, LC2, of meter 1A. Meter 1A has a daily peak of about 80 kW and a night-time minimum of about 25 kW, so that this circuit has minimal contribution to the overall building lighting load.

On a weekly basis the LK8 lighting circuit is about 39% of the energy use on circuit 2A. On an annual basis this would correspond to 1,873,000 kW-hr/yr for lighting circuit LK8. The LC2 lighting circuit is about 33% of the energy use on circuit 1A, about 137,000 kW-hr/yr for lighting circuit LC2. The total lighting electrical energy consumption is then estimated to be about 2,010,000 kW-hr/yr, or 4.1 kW-hr/ft2-yr (14 kBtu/ft2-yr). Thus, it is estimated that the ambient lighting represents about 23% of the total building electrical energy consumption of 8,660,000 kW-hr.

Measurements of the ambient electrical lighting system on the third floor showed an estimated installed power density of about 0.9 W/ft^2. This power density, if projected to the entire building, gives an estimated installed peak power of about 450 kW. This estimate agrees roughly with that measured for the whole building, i.e., the combined maximum of the main lighting circuits, LK8 and of LC2, (490 kW). The minimum power level is about 95 kW. A minimum power level of 95 kW for 8760 hours/year gives 832,000 kW-hr/yr. An additional power level of 395 kW (490 -95) for 12 hours/day for 6 days a week, for 52 weeks per year gives gives 1,480,000 kW-hr/yr for a total of 2,300,000 kW-hr/yr which is slightly larger than our annual estimate. If there is dimming of the lights to 80 % of full power, this would reduce the total power to our observed estimate.

Our present estimates of dimming on the south side is about 84% of full power, while the potential for dimming is to a level of 50 to 60% of full power. The present electrical use for electric lighting is of the order of 2,010,000 kW-hr/yr. Increasing the dimming to 60% over the entire system would reduce the electric lighting consumption by an additional 300,000 kW-hr/yr. This would give an additional savings at current on-peak utility rates of $0.10/kw-hr of $30,000 per year. Thus corrective measures suggested from the detailed monitoring can have substantial economic benefit.

CONCLUSIONS

The instrumentation of the building with illuminance sensors combined with watt transducers has given us valuable information about the operation of the integrated daylighting and electric lighting system. Portable data acquisition equipment provides an effective method of monitoring and evaluating integrated daylighting and electric lighting systems in selected zones of a large commercial building. Careful survey of the building is necessary to insure that measurements are representative.

Use of watt transducers on electric lighting circuits, together with illuminance sensors allows both the evaluation of the dimming system, and estimation of the available daylighting. The daylighting system provides light for large areas and long periods of time over the south lightshelf zone analyzed in this example. The dimming system is clearly not responding adequately in most cases to the presence of daylight.

The installed instrumentation can be used to evaluate the range of dimming that is possible. The lighting control system is capable of reducing the light level to 22% of full light output, and the power to 27% of full power. Proper integration of the electric light dimming system is essential for the realization of projected savings in electric power consumption.

Good correlations can be made between the brightness of the light shelf and the illumination levels that will be achieved in the space. These measurements indicate that it is possible to predict the available daylighting based on relatively few measurements and suggests a good location for lighting and control sensors.

Useful data can be obtained from the energy management system that gives a context to the limited survey measurements, and allow estimate of whole building impacts. Whole building energy use measurements by themselves do not by themselves permit one to assess the energy performance of a building. Submetering of electricity usage and other measurements are required.

More detailed measurements, such as those described here, not only identify components that do not meet expected performance, but many times will suggest solutions that can permit the particular building component to better achieve its optimum performance.

Session III

DATA ACQUISITION SYSTEM HARDWARE

A Modular Microcomputer-Based Data Acquisition System for Monitoring Energy Consumption in Buildings

Jeff Haberl, Tom Volckhausen, and David Claridge
Building Energy Engineering Program
University of Colorado, Boulder

Abstract

The Building Energy Engineering program at the University of Colorado has developed an inexpensive, IBM/PC compatible, portable data acquisition system. The system utilizes "off-the-shelf" technologies, has capabilities of displaying, capturing and storing 16 or more channels of information, and has certain control capabilities.

A data acquisition system is an improvement over traditional hand methods because it allows for the recorded information to be easily displayed, graphed and stored for later analysis. The modular aspects of our system are discussed as well as the development and design of the conditioning cards for the monitoring of temperature, sunlight, humidity, and event status. Software necessary to interface the data acquisition system with the IBM/PC together with component listings are also discussed.

Background

Since 1978 the Building Energy Engineering program (BEE) in the Department of Civil, Environmental and Architectural Engineering (CEAE) at the University of Colorado has had an ongoing graduate and undergraduate program specializing in energy conservation and solar applications related to the architectural environment. Recently, the program designed and developed, a modular, microcomputer Data Acquisition System (DAS) for the purpose of monitoring the energy used in the buildings on campus and to serve as a reconfigurable training tool for the students in the program.

During the conceptualization and development period certain objectives helped to guide the purchase of the equipment. First, the University of Colorado, Boulder Campus, awarded the microcomputer standardization bid to IBM. Initially, this meant that IBM Personal Computers (IBM/PC) would be the campus standard and that purchase of another microcomputer would usually require a sole-source justification[1]. Since this standardization, the University book store has begun offering another IBM compatible, the Zenith personal computer, at significantly reduced costs to registered students[2]. In effect, these events have produced a PC and MS/DOS[3] compatible environment on campus which helps to spread the computing load, assure compatibility, and improve access to software through a check-out system at the University libraries.

Second, within the last two years several manufacturers began to market general purpose data acquisition boards that simply plug into the IBM/PC[4]. A few months prior to the purchase of our equipment a CEAE structural engineering faculty member chose the 16 channel Tecmar PC-Mate Lab Master A/D board for his research[5]. Since we had the opportunity to build on the design experience of the previous purchase, we decided to acquire on the Tecmar system.

Finally, we adapted this previous CEAE design to a modular design in order to provide for easy substitution and reconfiguration of the sensors. This modular design allows for different combinations of sensors for the Tecmar A/D card to scan.

This has been the most important design aspect of the entire system. Our system was designed for data acquisition and intended for many different short term monitoring and equipment efficiency tests at the campus Student Recreation Center. These short term tests varied from measuring 16 temperatures at the Ice Rink one day to measuring sunlight, humidity, and temperature in the pool room the next. Without an easily reconfigurable system, the cost for each data point could become excessive. Also, from an academic standpoint, the experience of the graduate students that have worked on the initial stages of the system has shown that a deeper understanding of data acquisition, filtering and software interface is possible with an in-house designed, modular system than with a permanently configured system that does not allow the user to follow the design from the sensor to the keyboard.

This paper presents one solution to computerized data acquisition that utilizes reasonably affordable, off-the-shelf components. The three sections that follow

discuss the system hardware and configuration; the modular data acquisition system, and design experiences.

System Hardware and Software Configuration

Configuring a data acquisition system today means choosing from a large selection of available microcomputers, plug-in data acquisition boards, sensors and other hardware, all of which seem to have similar capabilities and prices. We chose the system we designed in a somewhat arbitrary manner because of limited time for hardware selection, and University purchasing procedures.

The criteria that we established for the purchase of the hardware included: previous experiences of other A/D designers at the University; commercial availability; low cost; equipment reliability; interchangablity with existing microcomputers within the department; availability of service and disposable parts replacement (ribbons, ink, pens, etc.). We were also limited to certain hardware suppliers that were registered with the University, although this could be circumvented with a sole-source justification should a specific manufacturer be chosen.

Hardware preparation

The system that we designed can be seen in the photo in Figure 1. The microcomputer is an IBM/PC with 256k of memory on the mother board. The IBM/PC is configured with; an IBM color graphics interface; a QUADRAM[6] expansion card with 256K of additional memory capacity, a battery operated clock/calender, parallel, serial and game ports; a Western Automation Laboratory[7] external, 20 MB hard disk and disk controller; 2-360k Control Data Corporation[8] floppy disk drives; and a Tecmar A/D "mother" board. A schematic diagram of the configuration is shown in Figure 2.

The system monitor is an Amdek 300A[9] amber monitor that is compatible with the IBM color graphics board. The printer is an Epson RX-80[10] dot-matrix printer connected with a parallel interface to the QUADRAM board. The plotter is a Hewlett-Packard HP/7470[11] 2-pen plotter that has an interface with the IBM/PC via the serial port 1 on the QUADRAM board. All 120 volt AC power to the system hardware is protected against high energy voltage spikes with metal-oxide varistors contained within the on-board power strip[12].

Security of the personal computers is a problem for a public institution such as a university. We provided protection from theft by securing each of the major hardware components to the cart with padlocks. The cart is then provided with a length of chain to prevent volunteers from walking away with the system should the system be in a remote location for any length of time. The security system was fashioned in-house as this provided more protection for the dollar than was available from vendors.

Software preparation

In an environment such as a university, many users must have access to a number of software programs, both proprietary and in-house. Our main objectives in organizing the hard disk for random access by multiple users include; security against unauthorized access; shared responsibility of software backup and archives; easy-to-use instruction manual for faculty and students; adherance to copyright protection of proprietary software.

We have organized the software that is resident on the PC as shown in Figure 4. Access to the PC is limited through the use of password software that is automatically booted each time the computer is turned on. The password procedure is useful for keeping unauthorized persons out of the system. Improved access procedures would require either a power-line lock or a modification to the software/hardware boot procedures contained in ROM.

Those programs that are targeted for permanent hard disk storage are assigned a sub-directory, and a batch (.BAT)[13] loading procedure. The batch files automatically load the permanent copy of the applications software from the appropriate sub-directory in which it is resident into the "flash" disk, change the data disk to the floppy disk (announcing to the user that he/she must insert their own copy into the appropriate drive) and executes the program. These batch files can also set/reset and query about the status of the peripheral hardware (e.g. printer, plotter) in order to establish the internal software settings for the applications program to interface through the serial and/or parallel ports. The system manager is then responsible for archiving permanent applications programs, directory structure and batch files and the user is responsible for maintaining backup copies of their data files and personal software. All other software not authorized for permanent storage is periodically removed from the hard disk to prevent overloading the storage capacity.

These precautions make an instructional manual a reasonably easy document to maintain. Procedures for operating the software are contained in one manual and paraphrased into one page step-by-step reference sheets for use in classes. The manual also contains information concerning the hardware switch settings, data acquisition system specifics, and printouts of important software.

Preparing the Data Acquisition System

The preparation of the Data Acquisition System (DAS) involved coordinating an interchangable modular design with available electronic parts from the campus electonics store. Care was taken to protect the delicate integrated circuits from careless users and

careless users from 120 volt AC by enclosing all connection points except the S/100 box (Figure 6) and the lab interface panels.

The principle power supply was designed by Western Automation Laboratories and installed in an oversized box as seen in the photo in Figure 5. The enclosure for the power supply also serves as an enclosure for the Tecmar daughter board, fused protection for the laboratory interface and as a backboard for the laboratory interface. Each card (Figure 7) so designed can then be plugged into any of the six slots in the S/100 card box. The S/100 pin assignments are shown in the listing in Figure 8. All sensor inputs have similar (and readily available)"banana" type pins and are color coded. The power supply for the signal conditioning circuits is provided on the reverse side of the lab interface box, opposite from the sensor inputs. Labeled screw-clamp type terminals are provided for the +5 volt DC, +16 volt DC, -16 volt DC and Ground connections.

Twenty-four fuse protected, digital input/output lines are also provided from the lab interface panel directly into the Tecmar mother board, located inside of the IBM/PC. These lines can be software configured to provide for input, output and handshaking. These digital I/O lines are extremely useful because they can provide: the status of equipment operation; a signal for a digital multiplexer; and a means to measure pulse type operations that would typically tie up the control software with sampling routines.

The Modular Data Acquisition System

One of the goals of the design of the system was to accommodate sensor interchangability. The system provides students with hands on experience at choosing an appropriate sensor for a data measurement, designing the conditioning card to modify the signal to be acceptable to the Tecmar range, building/testing the circuit, adding necessary software filters for the digital signal and integrating the signal into the data acquisition software.

The S/100 modular card box is built around a readily available six slot S/100 mother board, commonly used in microcomputers. Typically, four or more sensor conditioning circuits can be assembled on one card, tested and inserted into the S/100 box. Sensor connection is then accomplished by plugging the sensors into the lab interface panel which is connected to the S/100 board for the conditioning cards to pick up. The connection to the Tecmar daughter board is also provided at the S/100 point.

Sensors and Signal Conditioning

Almost all the sensors, except for the status sensors, need signal conditioning to convert the signal from the generic sensor output (varying current, voltage or resistance) to the 0-10 volt DC input for the 16 channels of the Tecmar daughter board. Three sensor circuits are provided in Figures 9, 10 and 11. These circuits each represent one possible type of conditioning card for the monitoring of solar, temperature and humidity conditions.

The Analog Devices AD590 Integrated Circuit Temperature Sensor[14] circuit is shown in Figure 9. IC sensors are slightly linear, have a wide range of temperature (0-400C) applications and are inexpensive. However, they do have some drawbacks. They tend to be slow and self-heating, and require a power supply. The sensor is accurate to $\pm$ 0.5 C over the range -55 C to +150 C. The sensor has a high output impedance which helps to filter out supply voltage variations. Sensor calibration was performed using a guarded hot-box over a range of temperatures.

The front end of the circuit shown in Figure 9 uses a LF356 operational amplifier. This op-amp amplifies the signal and subtracts the offset voltage from the voltage across the AD590. The offset voltage is adjusted by setting the 100 ohm variable resistor R1. For reading the ranges normally encountered in outside temperature and indoor temperatures we set this offset voltage for 200mV. In other words, a temperature of 200K results in a 0 output voltage from the op-amp #1.

The second stage op-amp is used in a non-inverting configuration to amplify the output from op-amp #1 to the 0-10 volt DC required by the Tecmar board. For the applications we encountered we set the gain to about 50. This means that a 10 VDC input to the Tecmar corresponds to 4000K temperature and a 0 volt DC input to the Tecmar corresponds to 200K.

Capacitor C1 acts as a high-frequency noise filter in the circuit output through a feedback loop to the op-amp. Again, sensor calibration was completed using a guarded hot box over a range of temperatures.

The Dodge Products Pyranometer sensor is shown in Figure 10[15]. This sensor, being a type of solar cell, produces an output which varies from 0 to 0.1 volts with the incident solar radiation. The signal conditioning for our application needed only to amplify the voltage to a 0-10 volt range. Two pyranometer circuits are in use by the DAS to account for vertical and horizontal radiation measurements.

Variable resistor R4 is used to provide an offset voltage to be subtracted from the pyranometer output voltage. We found that in periods of complete darkness the pyranometer output voltage was negative. Since the Tecmar reads a negative voltage at +10 volt DC the scaling for plots tends to use this value instead of the maximum during daylight hours. Corrective measures were implemented in software to avoid this problem. R3 adjusts the gain (about 9 in this case) and C2 reduces high frequency noise.

The Johnson Controls Humidity Sensor conditioning circuit is shown in Figure 11[16]. The sensor is a cellulose acetate butyrate impregnated with carbon particles that expand or contract depending on moisture content. The resistance of the sensor varies from 2400 to 2750 ohms for a relative humidity varying from 10 percent to 90 percent, with an accuracy of ± 3 percent. Temperature compensation of the element is accounted for in software.

This circuit is basically a Wheatstone bridge, with R5 used to balance the bridge. R7 is used to adjust the gain on the AD521J precision instrumentation amplifier. R6 is used to set the actual gain value, 40 in this case. This circuit can also be modified to be a signal conditioning card for thermistors.

Data Acquisition Software Development

The primary objectives that guided the development of the software were to create a menu-driven software package that could calibrate and collect the information from the Tecmar card, convert the information into the proper engineering units, record the information to disk, edit/merge existing files, and create printouts and plots of the recorded information.

A view of the operating screen at run time is provided in Figure 3. Figure 12 is a plot obtained from the same information seen on the screen. With the DAS software the user can select the appropriate option from the choices available; plotting, printing, editing/merging and data monitoring. The program is a culmination of efforts from a number of graduate students, written and compiled in BASIC.

The plotting option drives the HP/7470 plotter with commands addressed through the serial port. The printing option allows for hardcopy of the data that is stored on the disk by the DAS software. The editing/merging allows files to be edited once the data has been collected. This last function can be performed by the DAS software or any other screen oriented editor. The actual data monitoring portion of the program has been the longest in the development stages and can be seen in operation in Figure 3.

The monitoring operation performed by the DAS software reads the channels from the Tecmar at intervals defined by the user. The data is written directly to disk when read, thus avoiding the potential for lost data should an interrupt occur. The user can calibrate any or all of the channels from the keyboard, set the duration of the scanning intervals, and assign channels to the proper screen section.

Design Experience

Design experience can be valuable if one can learn from ones mistakes and incorporate the improvements into future work. This section outlines the experience that we gained during the design period and describes certain of the improvements that we will incorporate in future designs.

Experience with the hardware.

The hardware setup and the choice of cart are more important than they seem. Although not in any particular order the following are guidelines we recommend. The cart should be narrow enough to fit through doorways. All sidearm, workplane extensions should be very strong and have a stowed position to allow the cart to be wheeled through an average doorway. All hardware should be securely fastened to the cart by attaching directly to the cases. The cart can then be locked in place as a precaution against theft. Use inflatable, large, soft, rubber wheels in order to keep the vibration down when moving the cart. Having a fragile hard disk on the cart is not the best of solutions. Removable flexi-disks with 1-5 Mbyte of storage are a better solution, although more expensive.

Experience with multiple users.

Almost all data acquisition systems come equipped with multiple users. We found the following to be useful in dealing with them. Use a password procedure if possible. Maintain at least 2 generations of backup copies of all software disks and manuals, when possible, limit access to the originals. Blank disks dissappear in proportion to the number of users. An inexpensive supply is the only prevention.

Label all plugs with permanent markings. RS232 plugs seem to connect everything to everything, even components they are not intended for. The modular aspect of the data acquisition system is convenient for prototyping but presents a wide open target for shorting out the wrong pins possibly causing damage to IC's within the Tecmar and IBM/PC. All I/O pins should be fuse protected and isolated if possible from the average user. Quick disconnects are inexpensive. They should be used whenever possible to allow for quick access to components when necessary. Otherwise, use color coded plugs for similar applications. On our system we used red, black, yellow and green banana type plugs for the lab interface and screw type connections for the power (certain applications, such as thermocouples, require special plugs). Finally, program the DAS software to deactivate the keyboard while it is acquiring data. The continue or interupt key sequence can then be displayed when the program is started and/or running, thus avoiding inadvertant disruptions.

Experience with the DAS

We avoided many mistakes by having our design reviewed by a competent electronics designer. We found that certain decisions that

needed to be made in the beginning effected the entire design, and are only reversible after significant consternation. The following is a brief punch-list that we developed and will apply to all future DAS at CU. If you build a modular DAS you need to have an extension card. Hands do not fit into 6 slot S/100 mother boards when adjusting dip switches. Solder everything. Intermittent connections are very difficult to trace. Test all circuits. Never place a card in connection to the Tecmar that has not been thoroughly tested. This can be a very expensive one-time test.

Certain sensors need calibration. Software calibration works only when benchmarked against an independent calibration device. Also, for best results, calibration needs to be performed over as many points as are feasible for a particular range both before and after a session. Some sensors are very slow, particularly the humidity sensor we used. Since this device is absorbing and releasing moisture from the surface of the sensor we found that a constant slow moving air stream around the sensor helped reduce the time constant for the sensor. Finally, don't rely on manufacturers' claims concerning the accuracy of their electronic instruments, should you use one to calibrate a DAS. NBS traceable instruments (which are usually very expensive), that have been handled with extreme care are one possible benchmark.

Experience with documentation.

Writing, documenting and maintaining DAS software is an arduous task, especially when it is to be used by persons other than the author. We intend to apply the following to future efforts. Expect the user to enter the wrong values. All values need to be checked for appropriateness and range prior to use. Inappropriate or out of range values will need to be indicated and appropriate values requested by the software. Documentation is the key to the success of multi-generation software. This is especially true when there has been more than one author. Documentation must be contained within the program code itself and in any accompanying manuals describing the software. Should the code overstep the limitations of the computer memory do not start slicing out documentation lines. Move them to a separate file and continue to document as the code is developed. Use batch files whenever possible to reduce the number of keystrokes needed to code, compile, debug, edit, etc. Over the period of months a few seconds every time an operation is performed adds up to many hours of time spent typing commands or staring at the screen waiting for an operation to finish in order to enter the next command. The most recent releases of the IBM DOS [1] are powerful enough to allow for branching and user query, etc.

Document the circuit designs. A circuit that took 15 minutes to design by one person can take 1 day to be analyzed by another. All circuits should be drawn-out in reasonable clarity, contain a parts list (including sources of special parts) and should be updated when any revisions occur. Switch, port assignments and pin-outs also need to be documented. The most common question that comes up is why doesn't the printer (or plotter, modem, etc.) work? Usually, it is because the user does not understand the assignment of the switches and/or ports from the computer to the device.

Discussion

This paper presents one solution to a DAS. Powerful yet inexpensive DASs can be built slowly by relatively inexperienced persons. These systems should use off-the-shelf components and simple programming languages when possible. Our system was designed, built and put in use over a six month period for about 1/3 to 1/2 the cost needed to purchase an equivalent, packaged system. Ongoing efforts at the University are now planning to supplement the system with a remote, dial-up battery operated DAS that would serve as a stand-alone extension of the present system.

Acknowledgements

Support by a grant from the University of Colorado Student Recreation Center is gratefully acknowledged. The work presented in this paper is the result of a team effort by the faculty, staff and graduate students of the Civil, Environmental and Architectural Engineering Department.

Special thanks is due to Tom Bank, who assisted in the circuit designs, and Eric Stauffer, the original author of the DAS software. Dave Simms, Rick Mistrick, Al Chong, Mathias Moebius, Paul Reeves and the designers at Western Automation Labs provided valuable assistance. Professor Jan Kreider also provided valuable design comments. The cooperation and assistance of Dr. Judith Bryant, Rec Center administrator, was essential.

References

1. IBM Personal Computer Division, Boca Raton, Florida,33432.
2. Zenith personal computers, Hill Top Road, St. Josephs, Michigan, 49805.
3. Microsoft, 10700 Northup Way, Box 97200, Bellevue, Washington, 98009.
4. S. Gates,"Laboratory Data Collection with an IBM/PC",Byte Magazine,5/84,p.366.
5. Tecmar Corporation, 6225 Cochran Rd.,Cleveland,Ohio,44139-3377.
6. QUADRAM Corporation, 4355 International Blvd., Norcross, GA,30093.
7. Western Automation Labs, 1700 N. 55 Street, Boulder, Colorado, 80301,(303)449-6400.
8. Control Data Corporation, Minneapolis, MN, 55440.

9.Amdek Corporation, 2201 Lively Blvd., Elk Grove Village, Ill.,60007.
10. Epson Corporation, P.O. Box 2854, Torrance, CA, 90509.
11. Hewlett Packard Corporation, 16399 W. Bernardo Dr., San Diego, CA 92127- 9989
12.S. Ciarcia,"Keep Power-Line Pollution Out of Your Computer",Byte Magazine,12/83,p.36.
13..BAT files by Microsoft in IBM/PC DOS manual, IBM Personal Computer Division, Boca Raton, Florida, 33432.
14. Analog Devices, P.O. Box 280, Norwood, Mass., 02062.
15. Dodge Products, Houston, Texas.
16. Johnson Controls, Penn Division, 2221 Comden Ct., Oak Brook, IL 60521.
17. Weathermeasure, Qualimetrics Inc., P.O. Box 41039, Sacramento, California, 95841.

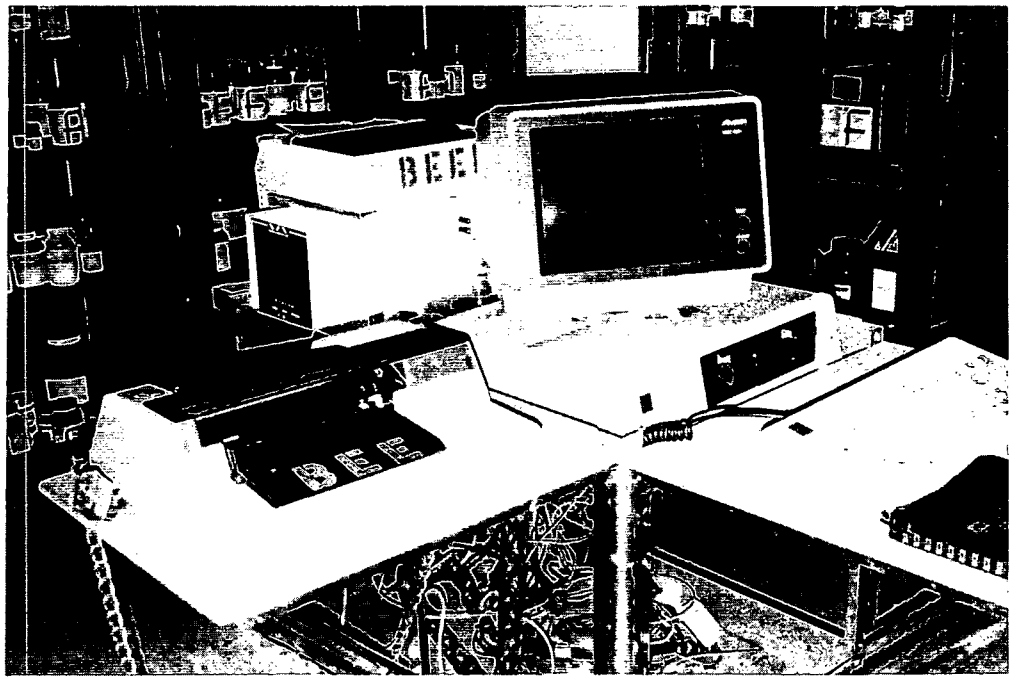

Figure 1. Personal Computer on the Cart

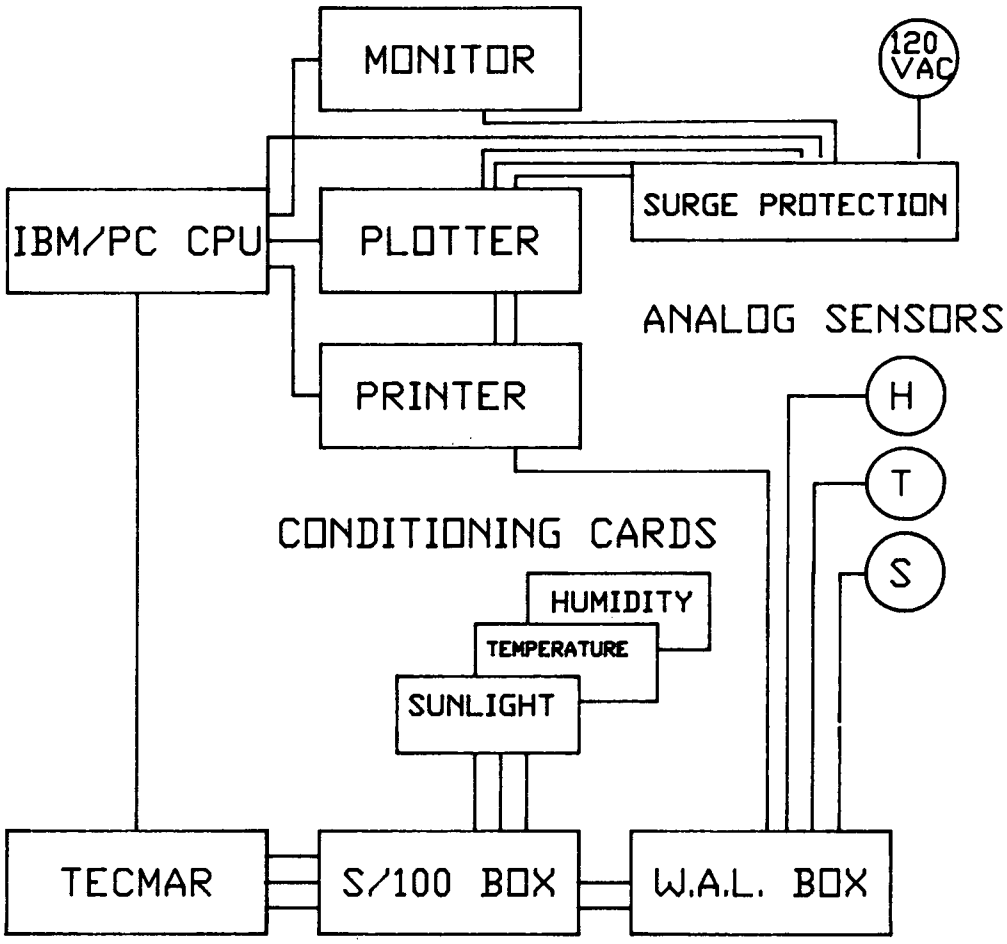

Figure 2. Schematic of the Hardware

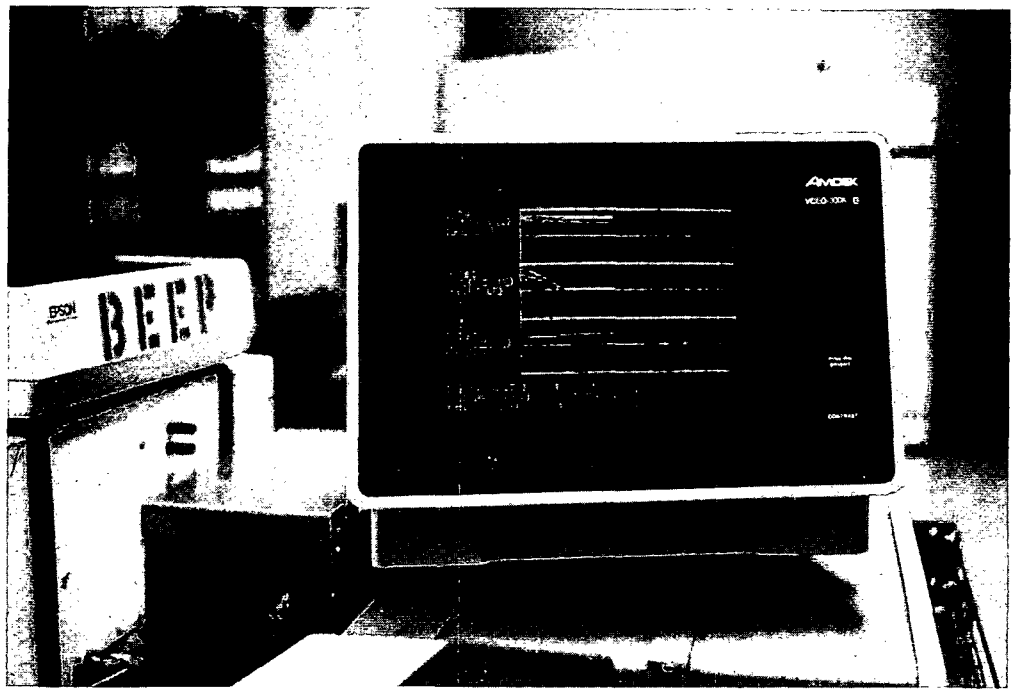

Figure 3. Showing Real Time Acquisition

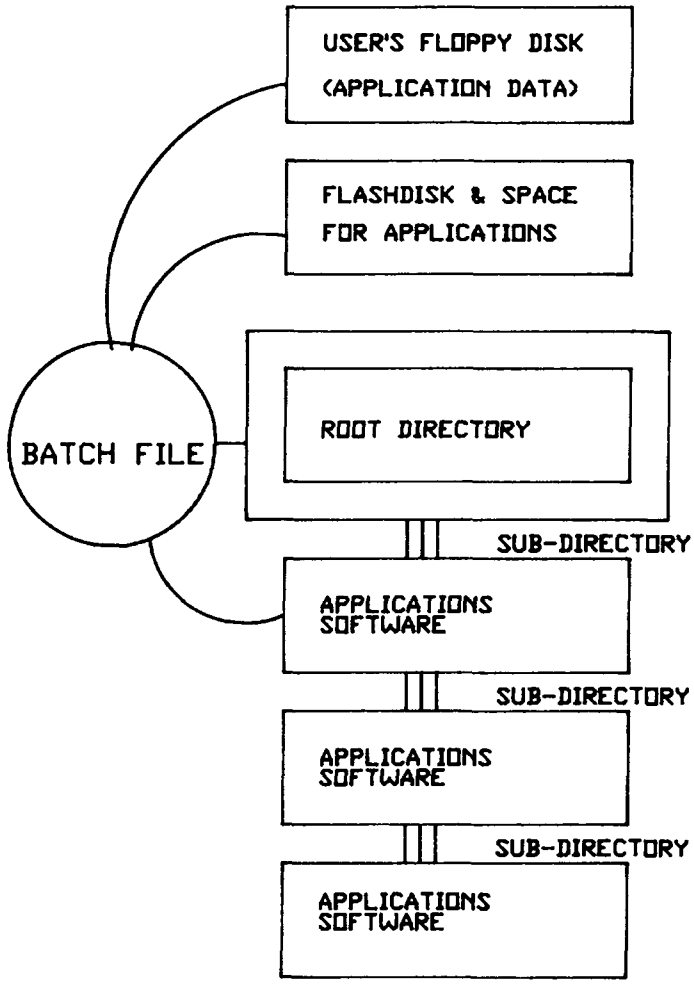

Figure 4. Schematic of the Software

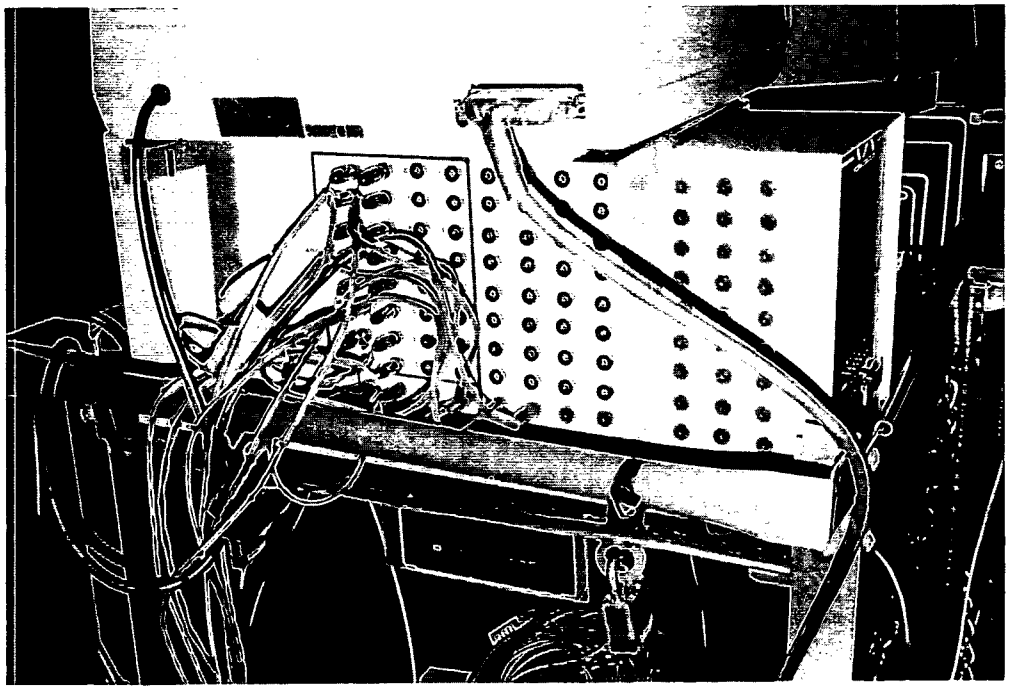

Figure 5. Western Automation Lab Interface

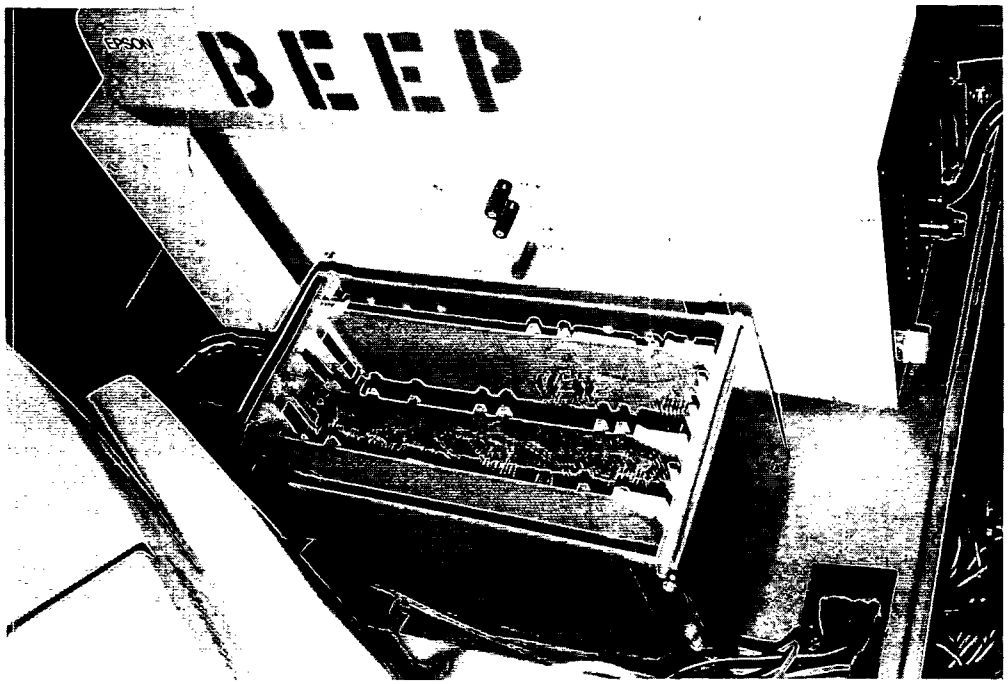

Figure 6. S/100 Interface Box

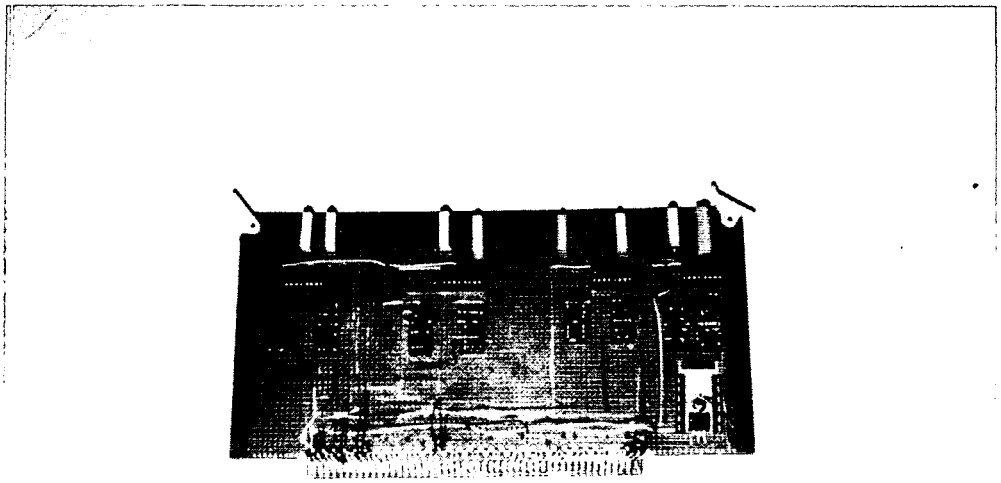

Figure 7. The Modular Card

PIN	ASSIGNED USE
1.	+8 V.
2.	+16 V.
3.	+ wire (red plug) to AD590 sensor, Tecmar CH 0.
4.	- wire (black plug) to AD590 sensor, Tecmar CH 0.
5.	+ wire (red plug) to AD590 sensor, Tecmar CH 1.
6.	- wire (black plug) to AD590 sensor, Tecmar CH 1.
7.	+ wire (red plug) to AD590 sensor, Tecmar CH 2.
8.	- wire (black plug) to AD590 sensor, Tecmar CH 2.
9.	+ wire (red plug) to AD590 sensor, Tecmar CH 3.
10.	- wire (black plug) to AD590 sensor, Tecmar CH 3.
11.	+ wire (red plug) to pyranometer, Tecmar CH 4.
12.	- wire (black plug) to pyranometer, Tecmar CH 4.
13.	+ wire (red plug) to pyranometer, Tecmar CH 5.
14.	- wire (black plug) to pyranometer, Tecmar CH 5.
15.	+ wire (red plug) to humidity sensor, Tecmar Ch 6.
16.	- wire (black plug) to humidity sensor, Tecmar Ch 6.
17.	+ wire (red plug) to AD590 sensor, Tecmar CH 7.
18.	- wire (black plug) to AD590 sensor, Tecmar CH 7.
19.	Available (not used).
20.	- Ground.
21.	+ wire (red plug) to humidity sensor, Tecmar Ch 8.
22.	- wire (black plug) to humidity sensor, Tecmar Ch 8.
23.	+ wire (red plug) to AD590 sensor, Tecmar CH 9.
24.	- wire (black plug) to AD590 sensor, Tecmar CH 9.
25-49.	Available (not used).
50.	- Ground.

PIN	ASSIGNED USE
51.	+ 8 V.
52.	- 16 V.
53.	- Ground.
54-57.	Available (not used).
58-61.	Ground (connected to Tecmar pins 1-4).
62.	Output to Tecmar Ch. 15 (Tecmar pin 5).
63.	Output to Tecmar Ch. 7 (Tecmar pin 6).
64.	Output to Tecmar Ch. 14 (Tecmar pin 6).
65.	Output to Tecmar Ch. 6 (Tecmar pin 8).
66.	Output to Tecmar Ch. 13 (Tecmar pin 9).
67.	Output to Tecmar Ch. 5 (Tecmar pin 10).
68.	Output to Tecmar Ch. 12 (Tecmar pin 11).
69.	Output to Tecmar Ch. 4 (Tecmar pin 12).
70.	- Ground.
71.	Output to Tecmar Ch. 11 (Tecmar pin 13).
72.	Output to Tecmar Ch. 3 (Tecmar pin 14).
73.	Output to Tecmar Ch. 10 (Tecmar pin 15).
74.	Output to Tecmar Ch. 2 (Tecmar pin 16).
75.	Output to Tecmar Ch. 9 (Tecmar pin 17).
76.	Output to Tecmar Ch. 1 (Tecmar pin 18).
77.	Output to Tecmar Ch. 8 (Tecmar pin 19).
78.	Output to Tecmar Ch. 0 (Tecmar pin 20).
79-98.	Ground (Tecmar pins 21-40).
99.	+12 V.
100.	- Ground.

Figure 8. S/100 Pin Assignments

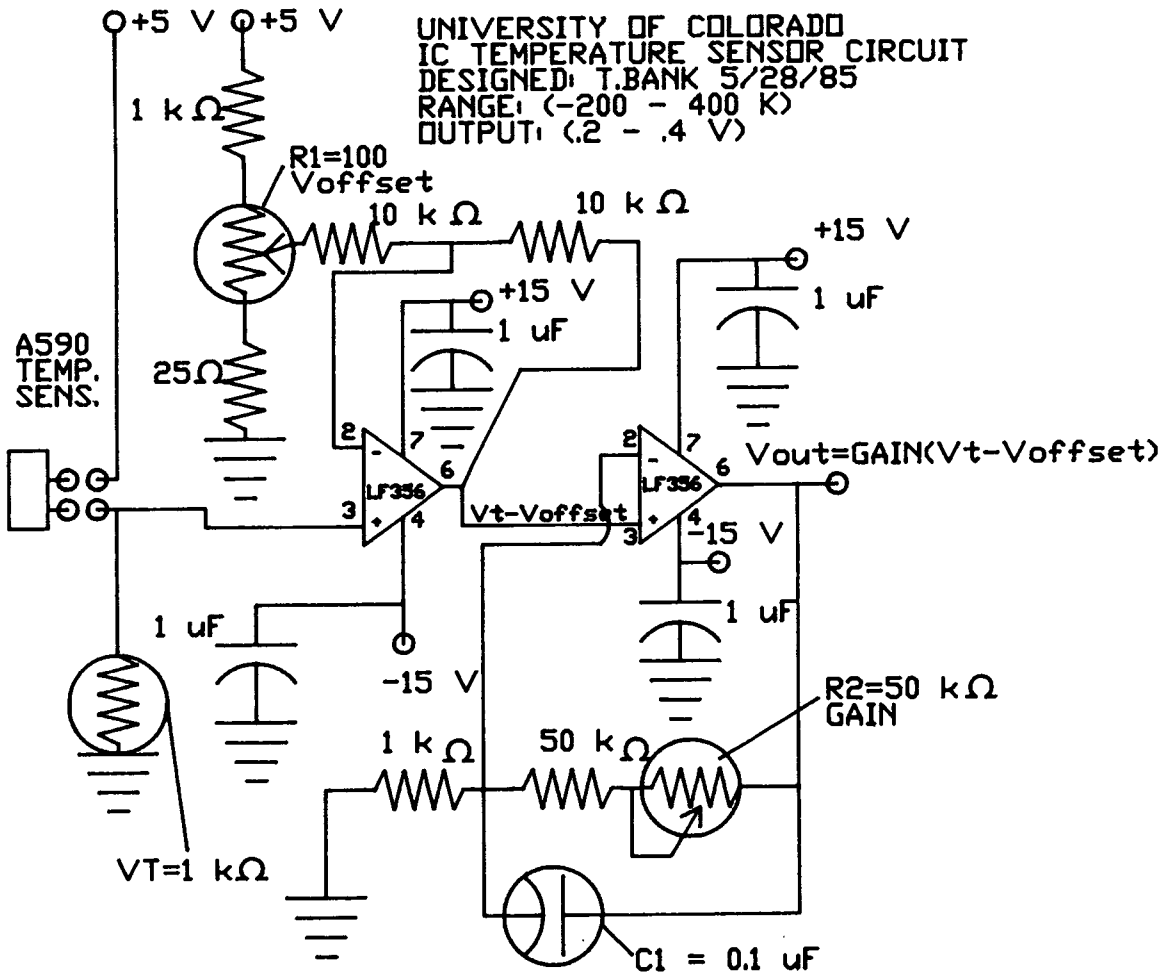

Figure 9. AD590 Temperature Circuit

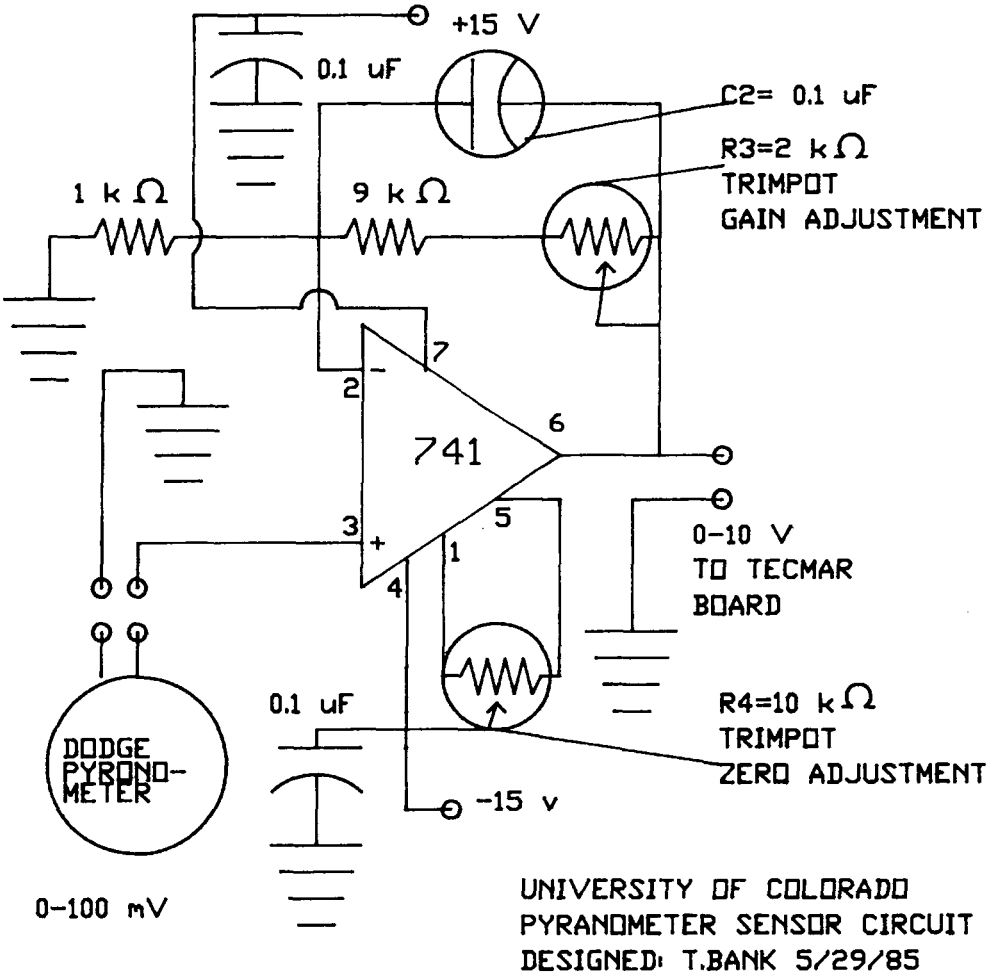

Figure 10. Dodge Pyranometer Circuit

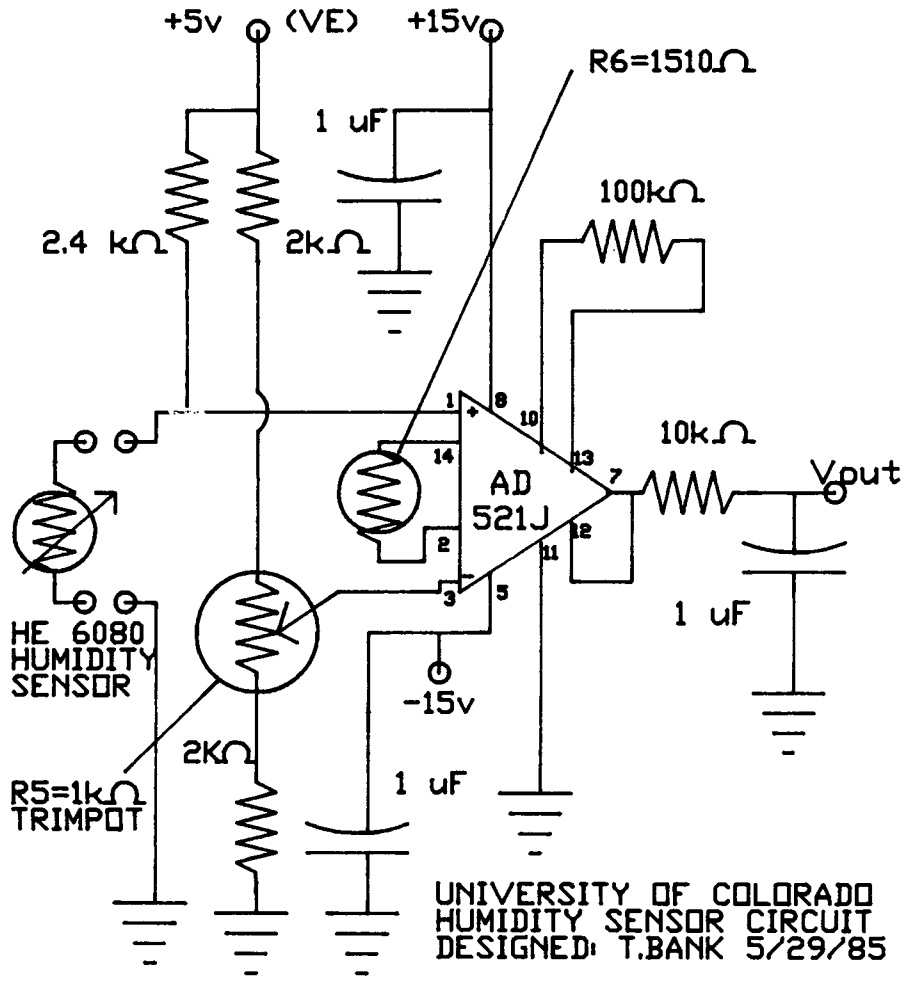

Figure 11. Johnson Controls Humidity Sensor

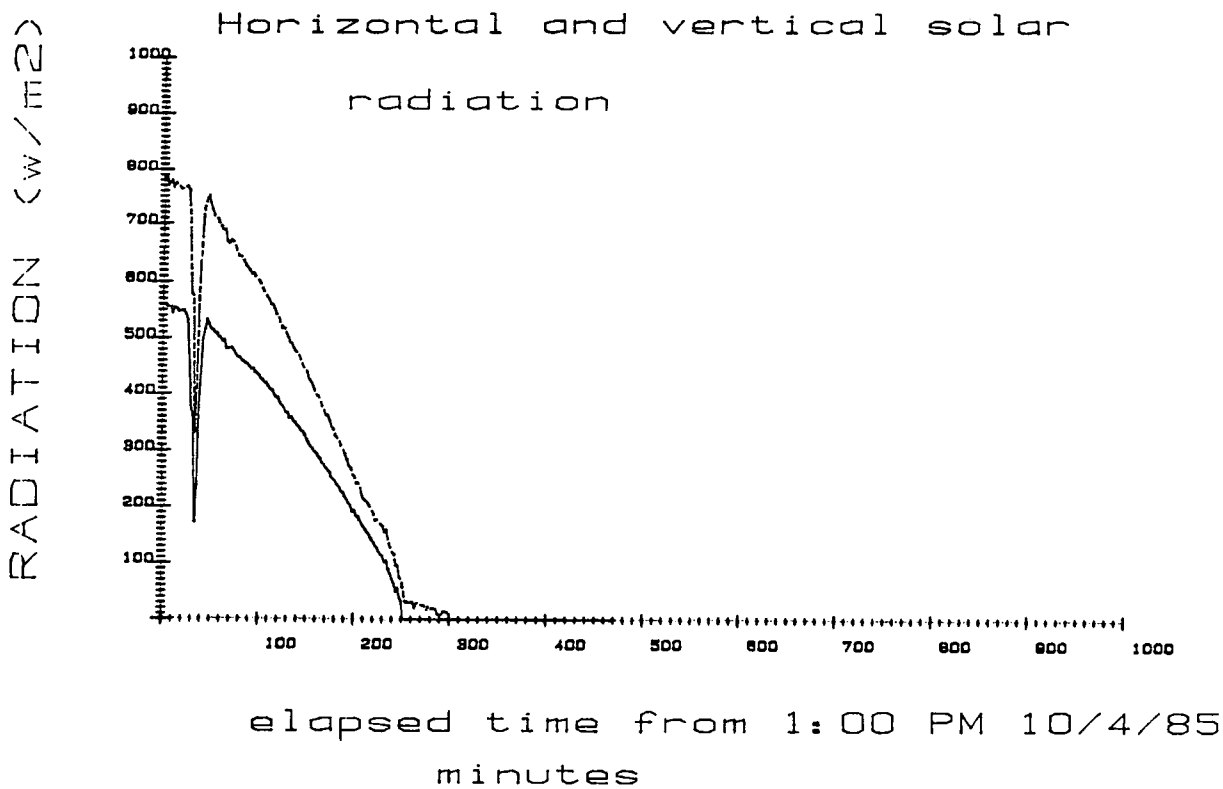

Figure 12. Graph Produced by DAS Software
Showing Sunlight (V,H)

Remote Data Acquisition System for Building Energy Data

Eileen Westervelt and Larry Windingland
Construction Engineering Research Laboratory
U.S. Army Corps of Engineers
Champaign, Illinois

Background

Early data gathering techniques at USA-CERL were labor intensive and limited in resolution. Periodic meter readings logged on a clipboard provided energy data on buildings with local heating and cooling plants, but stopped short of providing information on buildings serviced from central plants or of individual zone consumptions. Daily or hourly use patterns were impractical to gather. Strip chart recorders attached to sensors increased resolution of profiles, and magnetic tape recorders capable of accepting pulse inputs from gas and electric meters gave relief from manual readings, but data from both were cumbersome to interpret. All of these data collection schemes left something to be desired. The remote investigator was disadvantaged by unsure progress between site visits or between mail deliveries. All efforts required extensive work to get data into a form suitable for analysis. Present applications of remote data acquisition have resolved many of the drawbacks of earlier methods. The system installed at Fort Carson, Colorado allows for frequent sampling of numerous parameters. It can be accessed and checked remotely and information can be quickly retrieved in workable format for rapid information processing.

Overview

This paper describes a data acquisition system used to demonstrate the energy saving potential of various conservation retrofits on existing buildings at Fort Carson, Colorado. The retrofits include adding wall and ceiling insulation, blocking or replacing windows, improving control systems, and reducing the introduction of outside air. In addition to monitoring building energy usage before and after retrofit improvements, nearby identical but unretrofitted buildings are also being monitored for comparison. The buildings are two types of barracks, a dining hall, and a vehicle repair shop. In total, fourteen buildings are being monitored.

To quantify energy savings, instrumentation and data acquisition equipment have been installed. Building instrumentation provides for flow and temperature monitoring of heated and chilled water, indoor and outdoor ambient temperature measurement, and metering of natural gas and electric usage. All measurements are digitally recorded using data acquisition units which are remotely accessible via telephone lines. Information stored by the data acquisition units is periodically transferred to micro-computers at USA-CERL in Champaign, Illinois where analysis occurs.

Equipment

Data Logger

The Acurex Autograph 800 data acquisition system is the data recording unit for this project. It was chosen for its remote programming capabilities, its diversity of accepted inputs, local data manipulations, data storage and on-line printer. The remote capabilities allow viewing and checking of real time information, programming and reprogramming of information processing, and transfer of stored data. The unit accepts up to 256 programmed channels for analog or digital input or mathematical processing. It will perform scaling, averaging and logical functions on data. Its 256K (expandable to 512K) history file card stores data in RAM in compressed ASCII format. Additionally, the Autograph 800's on-line thermal printer provides hard copy printout for on-site information retrieval and RAM backup.

Instruments

A variety of instrumentation in each building supplies input signals to the data recording units. Fourteen General Electric kilowatt-hour meters and ten Rockwell gas meters provide contact closure inputs to the Autograph for totaling electricity and gas usage. Twenty-three Aeroquip venturis in water lines produce a differential pressure which is converted by Viatran pressure transducers to a 4-20mA signal for flow measurement. More than one hundred Hy-Cal temperature sensors with current transmitters provide a 4-20mA signal that indicates water temperature in pipes, and indoor and outdoor temperatures.

Modems

Microcom SX/1200 modems are used in conjunction with the Autograph and an IBM-AT and DEC Rainbow computer. These 1200 baud modems use an error checking protocol which verifies the data transmitted and initiates a retransmission of information upon detection of an error. Experience has revealed the acute need for error detection on noisy phone lines. Data transfer over federal telephone service lines without error checking has yielded unprocessable (non-ASCII) files. Since the Autograph does not run an error checking program, an external device with this feature is essential, hence the Microcom modem.

Personal Computers

The IBM-AT receives history files from the Autograph and runs the Symphony software used for data manipulations. Trial processing on a DEC Rainbow gave way to the faster speed and greater mass storage capability of the IBM-AT. A 1/4" streaming tape drive peripheral on the IBM-AT provides backup and archive facilities for the energy data. A compiled BASIC program coordinates the communications and file processing routines. Although Autograph batch programming presently takes place on the DEC Rainbow, future interface with the Autograph will be with the IBM-AT only.

System Configuration

Location

The energy monitoring instrumentation and the Autograph 800 data acquisition systems are located in the mechanical rooms of the buildings. For most applications one Autograph services one building. In the vehicle repair shops one Autograph receives hardwired signals from four buildings via cables affixed to nearby telephone poles.

The energy monitoring instrumentation is suited for the rugged conditions in the mechanical rooms. Although the environmental specifications of the data acquisition units are tested in the mechanical room setting, the location choice is well justified. The use of the mechanical rooms puts the Autograph in close proximity to the instruments it monitors. This facilitates tracing wiring schemes and calibrating units and also allows an almost one stop field inspection at each building. Furthermore, it keeps the equipment out of sight and out of earshot of building occupants (an important consideration on Army Installations).

Cabinets

Each Autograph is in a locked steel rack cabinet. The cabinet's sliders hold the Autograph and modem off the floor and out of danger from mechanical room flooding. The doors of the cabinet conceal the tempting front panel keyboard and fluorescent display from would be investigators. The cabinet also serves as a mounting surface for telephone jacks and cable connections, and for storing extra paper and a few tools.

Cabling

Signal cables from the various instruments are brought to terminal blocks in a wall panel. Wiring from the wall panel is then brought to the cabinet containing the Autograph. Inside the cabinet the signal cable is terminated with a DB-25 connector whose mating connector is attached to a short "pigtail" run of signal cable from the Autograph input cards (See Figure 1). This cabling scheme between instrument and Autograph provides two benefits. First, it simplifies the thorough checkout for accuracy and safety of instrumentation signals prior to the connection to the Autograph. Second, since the short pigtails wired to the Autograph input cards are connected prior to shipping to the field, it minimizes the field wiring needed after the first installation of the Autograph should an input card or an entire Autograph need replacing. All wires are looped prior to connection to input cards on the Autograph to prevent condensation on cable casing from running into the Autograph circuitry. Spare pairs of cable were installed with the wiring between wall panel and Autograph to provide for potential expansion or possible cable breakage.

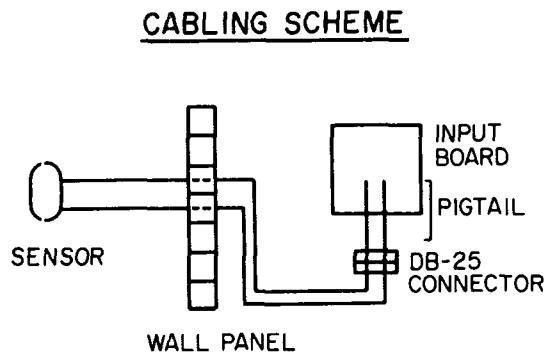

Figure 1. Cabling Scheme.

Shielding

Signal cables are 22 ga. stranded, individually shielded twisted pairs in ten pair bundles. Shields running in a continuous path from sensor to Autograph are tied together at the Autograph and connected to chassis ground. Shields are left unconnected at sensors to prevent ground loops. Although shielded cable is not generally required for current signals, due to the electrically noisy environment of the mechanical rooms and the use of contact closure signals adjacent to current lines shielded cable was chosen for all applications.

Heat

Temperatures near and above 100F are not uncommon in the mechanical rooms of this demonstration. The Autograph environmental rating is 120F and the modem rating is 105F. Fans are installed in the rack cabinets to dissipate the heat generated inside the cabinet. Additionally, an in-house designed circuit board is being lab tested which turns the modems on when the telephone rings and turns them off at the termination of the call. This way the modems are neither run continuously near their rated heat capacity nor are they adding heat to the cabinet.

Power

Power line surges and equipment generated noise can cause malfunction of a data acquisition unit. Power line failures can cause loss of data. The power line to the Autograph is protected in four places. A fuse is located near the service entrance to the building. Circuit breakers are contained in the outlet strip affixed to the rack cabinet and at the on/off switch at the Autograph. The wall outlet inside the locked wall panel has an Archer broadband noise filter and voltage spike protector. The data stored in the Autograph is safeguarded with a battery backup in the Autograph mainframe which can withstand a four hour power outage.

Due to the healing effect of cycling the power to a malfunctioning piece of equipment, testing is being done on circuitry which will permit the remote cycling of power to the Autograph via the telephone. This circuitry, which works in conjunction with the aforementioned modem power up circuitry, will momentarily disconnect power if an incoming call does not establish a 1200 baud connection. It is hoped that this capability will further limit the need for on-site assistance.

Human Factors

Field Help

Although minimal human intervention is desired, the benefit of visual inspection of system operation is hard to replace. The thousand mile telephone link between investigator and project makes it difficult to sustain desired system performance. The average number of days the remote systems have run without difficulty between monthly site visits is twenty-three. While plans are underway to increase uptime, a field technician has been hired for four hours a week to help support the eleven systems. His duties include the cycling of power to the Autographs if needed, the changing of printer paper, the cleaning of dusty fan screens, the upkeep of cabling, the replacement of failed electronics, and the relaying of site information and investigation of other anomalies.

Documentation

Substantial documentation is required to remotely maintain a system of this size and complexity. Careful logging of equipment location, serial numbers, warranty codes, firmware revisions, and purchase and service dates has proven essential for manufacturer support. Record keeping of equipment layout, instrumentation ranges, cabling and shielding schematics, computer interface parameters, well documented program code, data format schemes, and observations on system performance have been invaluable for remote troubleshooting between site visits.

Software as Support

Bookkeeping with Lotus 123 has facilitated information retrieval. Information on communication problems, signals out of range, file transfers, etc. is entered onto a Lotus worksheet which computes signal and

communication uptimes on a weekly and monthly basis. Tabulated reports on a building, building type, or time frame basis are easily produced. A cataloguing of problems and solutions on another worksheet is the beginning of an automated troubleshooting system.

Daily attempts at communicating with the Autograph systems has taken place to accelerate learning on remote interfacing and to increase reliability of data retrieval. This labor intensive procedure is being phased out as smart software running on the IBM-AT replaces human effort. A BASIC program which automatically calls up each building, gets a paper printout of real time information, dumps and resets history files, and preprocesses and enters data into Symphony for analysis has been written and is currently being debugged.

Processing

Local Programming

The programming of the Autograph can be done in two ways: by the front panel or remotely. Front panel programming consists of stepping though a series of question loops grouped under eight function headings on a thirty-two character fluorescent display. Valid responses from a menu of answers yield the next question. Examination of the flow charts in the operator's manual coupled with trial and error will allow the programmer to answer only the questions necessary to achieve the desired result, thus speeding up programming time. Several standard data manipulation schemes (averaging, standard deviations, graphing, logic) have default programming or function calls available. Fairly specialized data crunching (date in a data column, automatic resetting of data fields) can be achieved by manipulating channel registers with algorithms reminiscent of assembly language programming. The data gathering and processing program can be secured with a password option.

Remote Programming

The remote programming code for the Autograph 800 is challenging but conquerable. One and two letter mnemonics are strung together in precise lines without comments. The code is difficult to master prior to a thorough understanding of front panel programming as a few quirks in remote interfacing are undocumented. Certain commands will crash if their position relative to other commands is not specific. Additional command errors will be flagged if trailing spaces at the end of some command lines are not removed. The Autograph will accept but not act on a handful of commands if they are given in lower-case, while other lower-case commands are processed without problem. Although these responses are alarming to a new user, the benefits of remote programming are worth the learning effort.

The key to rapid remote programming is batch processing. Highly commented code is created using the Select text editor on the DEC Rainbow. A BASIC program strips off the comments and trailing spaces of the commented file and creates an Autograph ready file. This file is sent to the Autograph using the Poly-Trm communications package. Any needs for resending or editing the program are easily met without extensive retyping. Remote programming is substantially faster to enter and easier to modify or correct than front panel programming.

Data Gathering Scheme

The program for this project instructs the Autograph to sample the milli-amp input signals once each minute and monitor the contact closure signals continuously. The milli-amp signals are digitized and scaled and a running total of the scaled contact closures is updated. This information is used in minute by minute zone btu calculations. All minute information is stored in a history file which overwrites itself daily. Each hour, the information from the past sixty minutes is averaged or totaled and stored in a second history file which holds up to three weeks of hourly information (See Figure 2). The hourly history data is routinely transferred to USA-CERL. Minute data is only transferred when greater resolution of energy information is desired. This two file scheme captures the benefit of rapid sampling without the related data crunching effort and makes available the minute information if needed.

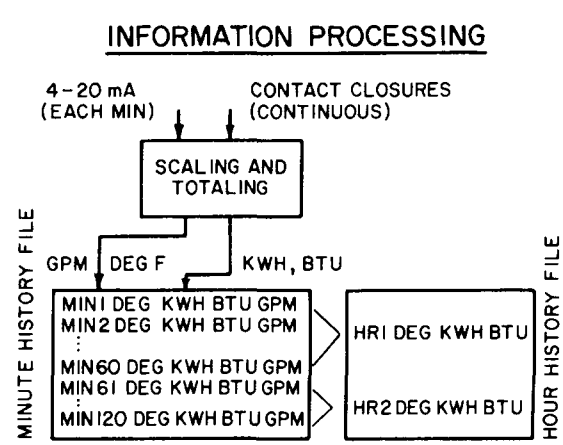

Figure 2. Information Processing.

Interfacing

The successful communication between data logger and personal computer requires meticulous attention to interfacing protocol. The Autograph uses a RS-232C serial port interface to transfer ASCII coded files to compatible devices. It supports hardware flow control only and its default configuration is for a seven bit word length with two stop bits and no parity at 1200 baud. Connecting devices are matched to these parameters for best results. Although interface parameters can be changed on the Autograph, an unexpected clearing of memory can result in a communications block until front panel programming reconfigures the serial port.

During remote communications, the Autograph does not buffer data gathering when communication delays occur as a result of modem or micro-computer buffers filling up, but rather suspends scanning until a clear to send signal is received from the modem. If the modem fails to send a go ahead signal within 120 seconds of its initial time out, the Autograph resumes processing of information and directs it to local ports only. Information processed between the 120 second limit and the modem go ahead signal is lost to the remote observer. This time limit was reached and information was lost in transmission when data was initially processed on the fly as it was being received at the IBM-AT. The hold up was discovered to be the slowness of the interpreted BASIC programming. A compiled version of the same program processed information within the time constraints of the system.

The operating system of the Autograph does not allow for complete programming flexibility but does provide for most needed options within its framework. Where oversights in options have been signaled for the manufacturer, revised firmware has been provided. To accommodate the needs of this project, the current version of firmware allows for remote monitoring of history file programming and history file free space available, remote capabilities for aborting a history file dump, and a programmable time out value, which extended the wait time before serial port timeouts from 10 to 120 seconds to allowed the modems time for retransmission of data.

Conclusions

The acquisition of useful data from a distance requires care in planning, implementation of equipment, documentation of parameters and procedures, and the processing of information. Because the job site is not just moments away, and actions must wait until the next field trip, the problems which occur are more severe than if local. The remedy comes in the application of common sense, the strict attention to detail, and the regular verification of adequate performance. The data acquisition system must be reliable and flexible. It must be accurate and expandable. It must withstand its environment and deliver the desired information.

The data acquisition system for the Fort Carson project is meeting these goals with reasonable consistency. Limited field help has immediately increased reliability of remote communications. Ongoing development of remote power cycling and power turn on capabilities is expected to extend reliability still further. Automated procedures for data transfer and processing as well as performance logging will alleviate existing personnel requirements. The present system represents a substantial advancement from older technologies and provides a viable example for other data acquisition needs.

Field Data Acquisition Hardware

George J. Schuster
Engineering Physics Department
Pacific Northwest Laboratory
Richland, Washington

1.0 Introduction

Direct metering of electrical energy flows to specific end-uses in commercial buildings is an important adjunct to evaluation of possible conservation savings as a result of weatherization or equipment optimization measures. In addition, metering can often represent the most reliable and low-cost means of determining the weekly operating schedules required to model the building computer simulation tools. In order to support a number of building studies sponsored by the U.S. Department of Energy (DOE) and later by the Bonneville Power Administration, an effort was initiated at Pacific Northwest Laboratory (PNL) to develop a low-cost method for carrying out such metering.

After several pilot studies, a decision was made to engineer a microprocessor-based field data acquisition system (FDAS) tailored for the specific job of metering electrical energy flows in complex commercial buildings. The applications indicated that the field unit should have the following characteristics:

- It should permit the metering of as many circuits as necessary at a given site to provide the desired level of end-use disaggregation and redundancy in measurement.
- It should permit the acquisition of data at a variety of temporal resolutions, ranging from intervals short enough to monitor the behavior of electrical equipment with short cycle times to hourly or lower resolution data collection. If possible, it should permit remote adjustment of the measurement resolution.
- It should be reliable, maintaining its performance over extended periods in the field without requiring adjustment.
- It should be sufficiently inexpensive to permit metering of a large sample of buildings at reasonable cost.
- It should have nonvolatile, solid state memory and permit the remote acquisition of data.
- It should permit measurements with an accuracy at least equal to that of utility-grade meters.
- It should be capable of supporting a variety of instrumentation, including not only watt metering sensors but also meteorological devices.

The most recently completed system, designed to meet these requirements, is currently being deployed in BPA's End-Use Load and Conservation Assessment Program (ELCAP), an end-use metering study of 1000 residential and commercial buildings in BPA's service territory. This document provides a functional description of the FDAS design resulting from this support. A section on the hardware describes in some detail the functionality of the FDAS, and is followed by a description of the sensors which measure energy use and other parameters that affect energy use. The final section provides a description of the system's software.

2.0 FDAS Hardware

The principle components of the FDAS are the data logger, the modem, and the watt meter circuits. The system also includes a dc power supply, sampling transformers, fuses, and the ac input terminal blocks. These components are mounted to a single anodized aluminum panel for easy assembly and testing and for quick removal and replacement during installation and repair. All components are then placed in a standard electrical enclosure, and the modem board is mounted to the door (Figure 1).

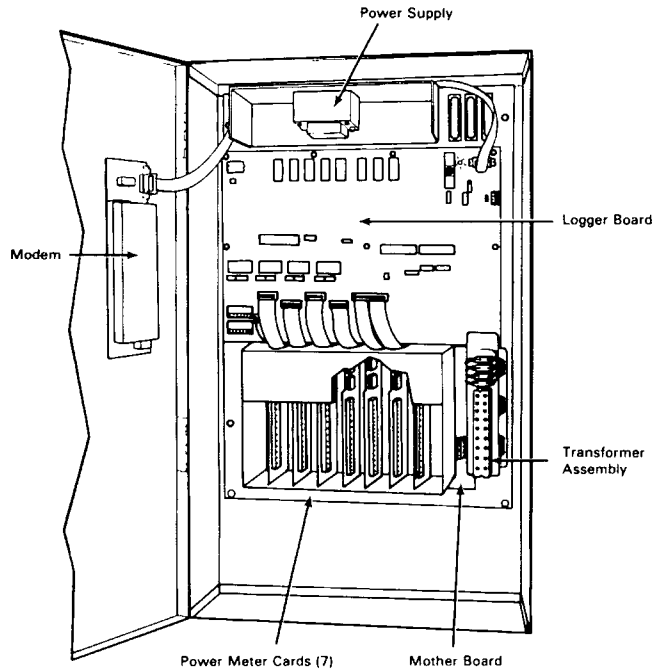

Figure 1

Layout of Digital Field Data Acquisition System

All system interconnects are accomplished with standard industry insulation displacement connectors and ribbon cable or, in the case of power cables, 18-gauge (UL-listed) stranded interconnect wire. The unit was carefully designed to route all high-voltage wire away from low-voltage sections, and wire harnesses were securely fastened using standard industrial techniques.

2.1 Data Logger

The FDAS data logger contains the microcomputer or central processing unit (CPU), which has the software needed to run the FDAS, as well as interfaces to each watt meter board. The data logger also provides a standard serial link to the modem, which enables the FDAS to use an ordinary telephone line as a means of receiving commands from and transferring data to a central data acquisition computer. A block diagram of the logger is given in Figure 2.

The data logger runs a program (described in Section 4) that acquires data periodically from each watt meter board and stores these data in nonvolatile memory. Sixteen kilobytes of data storage are available in this memory section where data are accumulated for each input channel. Data for each channel are collected by converting the watt meter's analog signal into a digital number using an analog-to-digital (A/D) converter; these converters are compatible with the 8-bit microprocessor bus and have 16 multiplexed inputs each. Thus, each data logger has the capability of using four A/D converters, with 16 channels each, for a total of 64 analog input channels. A few of these analog input channels are usually provided with additional circuitry to enable the data logger to collect meteorology data, including wind direction, inside and outside air temperature, horizontal solar radiation, and humidity. The CPU selects each of the 16 channels of each A/D converter and converts the 0-5 V dc signal at its input to a single 8-bit number. This number is then stored in memory and accumulated into totals for data reduction and storage. Providing the A/D converters with an analog reference voltage is a precision reference that can be preset for accuracy at the time the FDAS is calibrated.

The CPU is a single-chip microcomputer that has 128 bytes of Random Access Memory (RAM), 2048 bytes of Erasable Programmable Read Only Memory (EPROM), 29 parallel input/output lines, a serial communications interface, and a 16-bit programmable timer.

The 16,384 (16K) bytes of memory are implemented with eight-2K Complementary Metal Oxide Semiconductor (CMOS) RAM chips that are configured in a battery-backed protection circuit. If power is lost to the FDAS, the battery-protected memory retains data through the power outage. In addition to this memory protection function, the CPU is programmed to dial out via the modem to the central computer, signaling power outage and providing its identification number. The FDAS resumes logging data after the power outage, and the time is reset by the central computer shortly after the condition is detected. A special reset circuit was designed that detects brownout conditions in advance of power failure and holds the CPU in a reset condition to prevent random accessing of program or data storage. Once power is restored, the CPU is released to execute its program under normal conditions.

Three independent digital input devices, or Parallel Interface Adapters (PIAs), give the FDAS an additional 48 channels of digital input capability. These PIAs allow external monitoring or control of devices that use a standard Transistor-Transistor Logic (TTL) or 5-V interface. The CPU is programmed to count pulses at the PIA inputs at rates up to 75 cycles per second; this enables the FDAS to accept input from devices such as pulse-initiating watt-hour meters. This additional parallel capability enables the FDAS to be coinstrumented with other energy-monitoring equipment or to act as the remote data logging unit for studies that use these devices. Two of these digital inputs have conditioning circuits to convert sine waves generated by wind speed anemometers to digital inputs.

Logger PCB

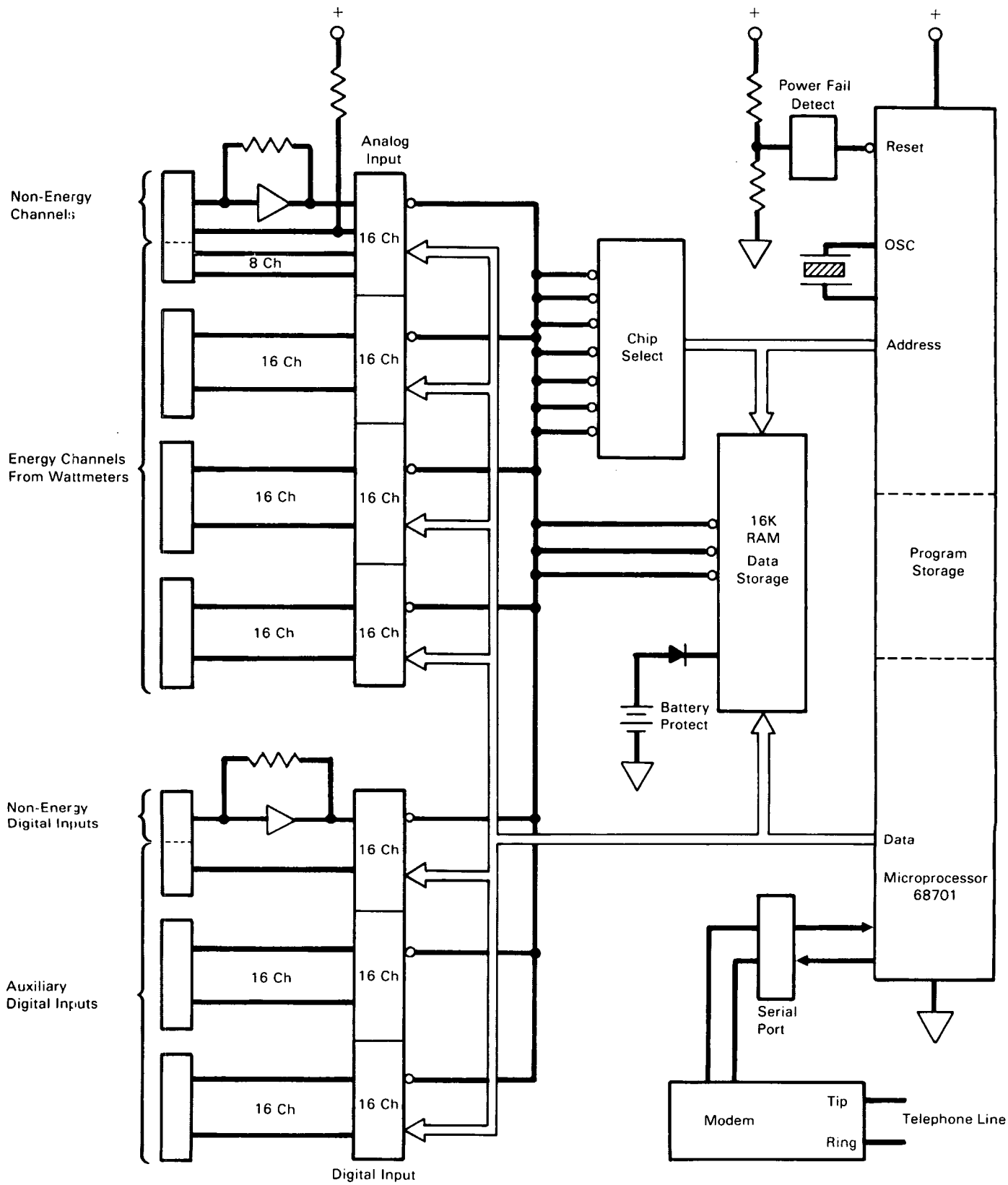

Figure 2

Logger Block Diagram

3.0 Sensors

The sensors used with the FDAS can be grouped into two categories: 1) sensors that allow the logger to monitor electrical energy consumption, and 2) meteorology sensors, which allow the logger to monitor important parameters that may affect energy consumption in a building.

3.1 A Sampling Watt Meter Circuit Board

Any electrical power meter must accumulate instantaneous products of voltage and current. In the sampling watt meter reported here, voltages are brought into each watt meter using line voltage stepdown transformers. These sampling transformers are attached to each voltage source and provide the reference voltages that are associated with the phases found in an electrical distribution panel. Current sensing is provided by installing a current transformer (CT) around each breaker wire to be monitored. These devices, which resemble a small plastic doughnut with two lead wires, are used by passing the wire to be sensed through the hole and attaching the two lead wires to the appropriate channel input on the watt meter board. As current flows from the circuit breaker to the appliance or other load, the CT develops a voltage between the two leads proportional to the load current.

The circuit in Figure 3 uses the transformer assembly to develop three reference voltages which are converted to two pulse outputs, one for the positive half-cycle of the waveform and one for the negative half cycle. These six pulse outputs, two for each reference voltage, are then picked up by the watt meter cards, which have the CTs outputs applied to them. As the amplitude varies from the voltage sensing transformer, the pulse outputs respond proportionally and the resulting reference voltages contain the waveform information in a digital form.

Scaling resistors are used to accommodate the use of the transformer assembly on circuits from 120 V up to 480 V. These scaling resistors must be selected precisely to provide the digital circuitry with voltages within its capability and directly proportional to voltages associated with the installation. The voltage amplitudes and phase relationships are maintained so as to provide real-time multiplication of voltage and current within the FDAS.

Switches are provided on the watt meter card to select the pair of pulses from the mother board for each CT; therefore, each channel can be configured for any of the three phases. A scaling resistor is provided to adjust the full-scale range of the CTs size as it does on the analog FDAS. The CT input, once adjusted for full scale, is gated by the reference pulses into an integration amplifier whose output is ribbon-cabled to the logger board. Since these reference pulses are proportional to phase angle and voltage amplitude, this digital method of watt metering provides accurate power measurements for which the power factor of a circuit is already accounted.

3.2 Full Sensor Complement

In addition to the watt meters, the FDAS can be equipped with an indoor temperature sensor and with meteorological sensors to measure wind speed, wind direction, solar radiation, and outdoor air temperature. Sites with meteorological stations would also receive an indoor relative humidity sensor. The meteorological instruments would be mounted on top of a pole of sufficient height to ensure that the effects of the building's envelope do not interfere with the instrument's performance. Signals from the instruments would be fed to special signal conditioning circuits within the FDAS.

Indoor air temperature is measured by using a calibrated reference voltage across a resistor divider network containing a temperature-sensitive thermistor. This thermistor (a Yellow Springs YSI 44006) provides an approximately linear resistance change versus temperature in the 0° to 30°C range. From this change the resistor divider network provides a temperature-dependent voltage which is input into an analog channel. Despite the slight nonlinearity in the resistance temperature characteristic curve and uncertainties due to a digitization scheme, the combination provides temperature measurements with an absolute accuracy of ±0.5°C over this range.

Wind speed is measured with a 3-cup drag-type anemometer (Weather Measure W200-SD) attached to the shaft of an ac generator. The anemometer has a usable range of 0 to 100 mph with a 5% accuracy and a 1.33 mph resolution with the A/D converter system. The ac signal from this instrument is rectified into a square wave with a frequency proportional to wind speed. This digital signal is input to one of the digital channels on the data logger.

The wind direction vane is mounted on a common axis with the anemometer and supported on teflon thrust bearings. A wiper contacts a potentiometer to create a voltage divider network. This device has a 0 to 5 V (dc) output for a rotation of 0° to 360° clockwise from north. The resolution of the instrument combined with a data collection system is 1.4°.

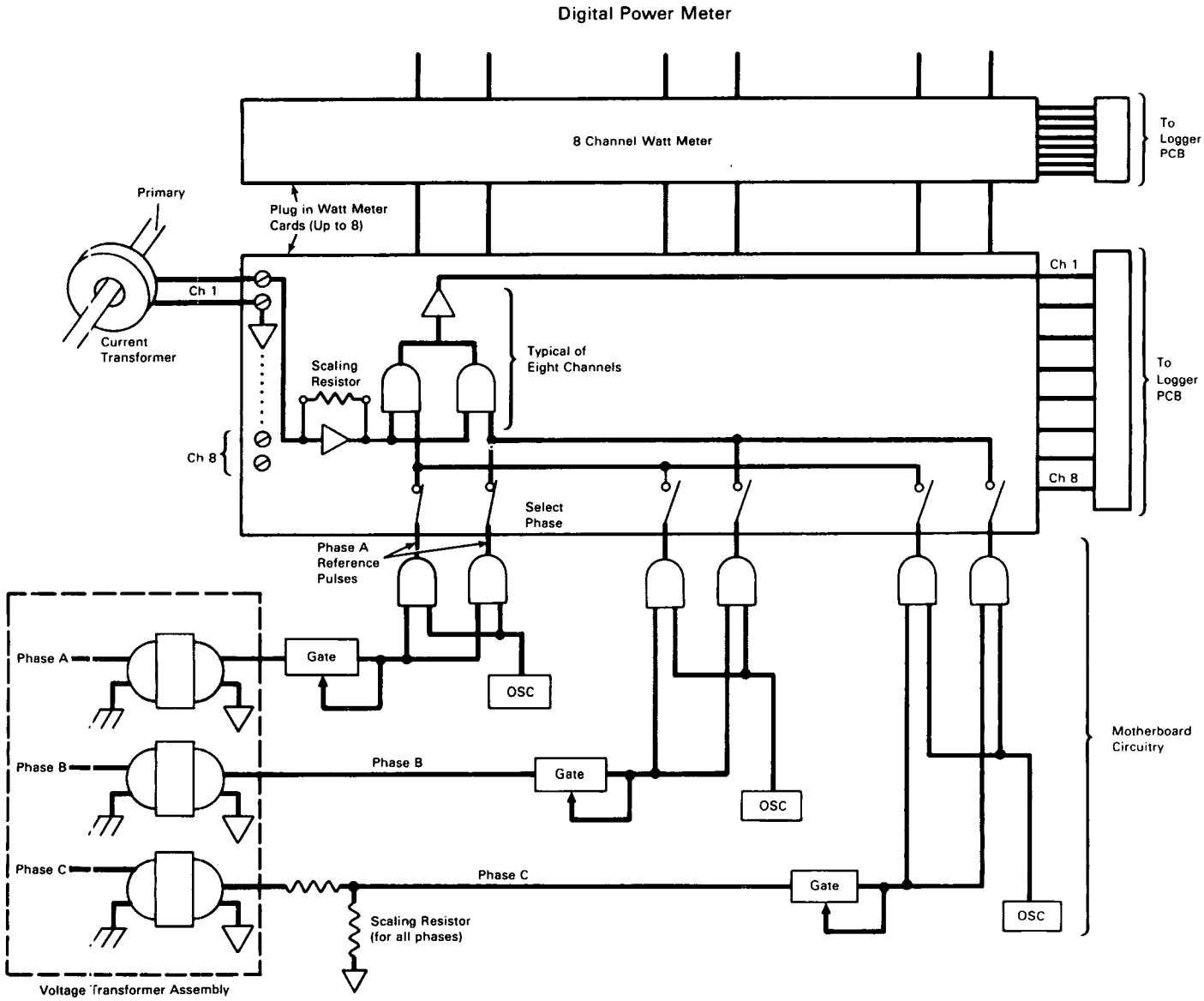

Figure 3

Digital Watt Meter

The accuracy also depends on an accurate determination of true north at the time of installation.

A pyranometer (Li-Cor LI-200S) is used to measure the solar radiation that strikes a horizontal surface. A silicon photodiode is used as the sensing element with an output of near 80 μ amps at full sun (1 kW/m^2). Each instrument has its own characteristics and thus its own calibration constant. Typical resolution is 5 W/m^2 with an accuracy of ±5% for incident angles of less than 80°.

The outdoor air temperature sensor uses a special thermistor (Yellow Springs YSE 44211A) in an active circuit to produce a linear response over a wide temperature range. The accuracy of the instrument is ±1.0°C over a range of -50° to 60°C. The outdoor air temperature sensor is mounted on the same pole as the meteorological station in a shroud that protects it from direct solar radiation.

The indoor relative humidity sensor (Weather Measure Model 5131-A) is a variable capacitance instrument that provides 0 to 5 V (dc) output proportional to 0 to 100% relative humidity. This instrument, like the indoor temperature sensor, is mounted on an interior wall and the resolution of the instrument is 0.4% relative humidity with an accuracy of ±5%.

One additional sensor is used to monitor woodstoves used as space heating equipment. A thermocouple (Omega XC1B-111) placed in the chimney transmits a low voltage signal

proportional to the hot flue gas temperature to the conditioning board when the woodstove is in use. This signal is amplified and recorded by one of the data logger's nonenergy channels.

The full complement of exterior sensors available for use in the FDAS allows all the significant parameters of building energy use to be monitored, making the FDAS a flexible and highly useful tool.

4.0 FDAS Software

The FDAS software processes the signals from the sensors into average values and reports those average values on request; that is, it processes signals from a collection of sensors into values that are representative of a time interval. This software must perform the repetitive scans and data manipulations necessary for the measurements to constitute a well-defined, appropriate physical quantity and to allow the analyst to examine the performance of his apparatus and retrieve the measurements upon request without disturbing the data collection function. Note that the FDAS software does not reduce the data into its final form. The task of applying calibration constants to the data is left to the central data acquisition computer.

The data accumulation that occurs within the integration period is the principle software routine which is performed. The integration period is the interval of time over which the signals from the sensors are averaged; it is selected by the user and can be set to any integer number of seconds from 1 minute to 18 hours. This integration period determines the length of contiguous, nonoverlapping intervals of time.

The values from the scans from all 112 data channels are accumulated for each integration period. Each channel has three 8-bit bytes of memory; at the start of the integration period, their sums are all zero. The values from the sensors are added to these sums, and, at the end of the integration period, the sums are converted by the data reduction routine to a record of the integration period.

The data reduction routine uses data compression techniques to reduce the data from the 3-byte sums so that only significant numbers are saved in the time series records. The routine will save two bytes from sums requiring the highest significance, one byte where only 8 bits are significant, and nothing where the sum has no significance (no sensor).

In order to assess the performance of the FDAS and allow for the extraction of the data from its memory, the FDAS recognizes 19 commands, summarized in Table 1. The FDAS examines the incoming characters from the modem, if the character stream matches one of the 19 executable commands, then any old command is terminated and the new command is requested.

After the interpretation of a command, the command processor executes one of the routines for the control of the FDAS. This processing is assigned a lower priority than the interpretation of the commands, so the execution of a command can always be interrupted. A new command will always supersede the previous one. This is most useful for ending the execution of commands that initiate continuous displays.

Whenever the software is idle, the logger indicates the idle condition by lighting a small light-emitting diode (LED). Here the FDAS awaits the next timer interrupt. These interrupts indicate the need for additional data processing.

4.1 Data Records

The data records consist of the time-series data as collected by the FDAS, i.e., in binary format, directly from the sensors. The records consist of a header, the digital data, and the analog data.

Table 1

List of Available Logger Commands

Function
Continuously display pulse counts from the 48 digital input channels
Continuously display scans of the 64 analog input channels
Continuously display the 3-byte sums
Display the software identification
Display the control parameters
Enter the set mode; display pointer
Enter the point mode
Add 1 to pointer or parameter
Subtract 1 from pointer or parameter
Add 10 to pointer or parameter
Add 50 to pointer or parameter
Transmit the data records in ASCII
Transmit the first data record in binary
Transmit the next data record in binary
Retransmit a data record in binary
Reset software
Set control parameters to zero
Clear data records and tests memory
Reset the modem

The data records were designed for the efficient use of memory and for speed of transmission. The record is transmitted in the same form in which it is stored in memory, as an integer number of 8-bit binary numbers. The length of the record is determined by the configuration of the specific installation and the number of sensors connected to the FDAS. One or two bytes of data are entered into the data record for every active channel.

Each record will have a header of nine bytes for the purpose of identifying the record. The header was designed to verify the performance of the data acquisition system as well as to identify the data record. For these purposes, the data record provides a check sum, a record length check, and a time stamp. The check sum is the result of adding together the values from the other bytes in the data record. The record length check verifies the total number of bytes in the data record, and the time stamp ensures that all necessary data records have been reviewed and are in the proper order.

It is important to assess the validity of the data record as it is recovered. If the check sum, the record length, and the time stamp all agree with the values expected for these parameters, then the measurements contained in the record can be taken as an accurate representation of the scans of the channels. Other considerations are used to determine if the signals from the sensors are representative of the quantities being sensed.

The Energy Signature Monitor (ESM) — Lessons Learned

Richard F. Szydlowski
Applied Science Center
Lawrence Berkeley Laboratory
Berkeley, California

ABSTRACT

The Lawrence Berkeley Laboratory, DOE, has developed the Energy Signature Monitor (ESM), an innovative data acquisition system which addresses the data acquisition and analysis requirements of test programs which involve monitoring of large samples of buildings. Information about typical number of sensors and accuracy requirements for such large monitoring projects was incorporated into the development of the ESM in order to meet the needs of most researchers without adding unnecessary, and expensive, features. The ESM hardware includes a microprocessor controlled data acquisition program, sixteen analog channels, two pulse count channels, an RS232 computer interface, and a removable EPROM-based data storage module. In conjunction with the hardware a complete data management software package, written to operate on a microcomputer, was developed to facilitate analysis of the recorded data. A total of 23 ESMs have been built to date, all of which are being used in a field monitoring study currently being conducted by Lawrence Berkeley Laboratory. Lessons learned during development, field use, and ESM design technology transfer to the private sector are reported.

INTRODUCTION

The Energy Performance of Buildings Group (EPB) at Lawrence Berkeley Laboratory (LBL) has conducted building energy research which involves both laboratory instrumentation and field monitoring for the past 8 years. During that period there have been numerous proposals for research studies which required the monitoring of a relatively large number of field sites in order to accurately determine typical, as well as extreme, building operating characteristics. None of these large monitoring projects were conducted because of the high cost of field monitoring.

Across the country there have been many other research projects in which the long-term monitoring of a large sample of buildings was required in order to accurately determine a particular building characteristic (e.g. energy use patterns, indoor air quality, occupant behavior, etc.). Most of these projects were unable to proceed because of prohibitively high monitoring costs. Often overlooked is the fact that the monitoring costs incurred during a field study include much more than just the data acquisition system hardware cost. Major costs include the technical manpower required to install and maintain the equipment, retrieve the recorded data, and manage the recorded data at a central analysis station. A significant, and costly, time investment by technical personnel is required to both install and maintain most commercially available data acquisition equipment. Since very few hardware manufacturers provide any integrated software, the user must develop the software to both operate the data acquisition and manage the large quantity of data collected from a large monitoring project. The bottom line is that experience has repeatedly shown field monitoring projects to be very expensive to conduct.

There has been at least one major attempt at controlling the overall cost of a major large-scale long-term monitoring project. In 1979 the Solar Energy Research Institute (SERI) initiated the Class B Passive Solar Data Acquisition System, the goal of which was a low-cost method for evaluating the thermal performance of a large number of passive solar buildings through the country. A summary of the Class B program is given by Frey.[1] SERI solicited a number of commercial data acquisition manufacturers to submit prototype data acquisition systems from which SERI selected one system, the Aeolian Kinetics PDL-24.[2] The data acquisition equipment for this SERI project was limited to that available commercially available. I addition to the hardware, SERI assembled a set of operating procedures and data acquisition and analysis software that were to be used at each monitored site to assure compatibility of collected data. After purchasing and using approximately 71 PDL-24 systems, SERI found a variety of hardware problems which, although eventually corrected, required considerable effort. The original Aoelian Kinetic company no longer produces the PDL-24 system, although new PDL-24 systems, and maintenance and parts for existing systems are available through Datak Systems. The PDL-24 systems cost $4000-$5000 per unit.

An informal 1981 EPB review of the available commercial data acquisition products which filled the requirements of large-scale low-level field monitoring revealed that the need for an innovative data acquisition system design which cost less than $1000 had not been meet. The Aeolian Kinetics system selected by SERI for the Class B monitoring program, while providing significant versatility, was still too expensive for many research project budgets. Advances in the electronics industry suggested that, with data acquisition system simplifications, a less expensive design was possible.

This work was supported by the Assistant Secretary for Conservation and Renewable Energy, Office of Building and Community Systems Division, Building Systems Division of the U.S. Department of Energy under Contract No. DE-AC03-76SF00098.

ESM DEVELOPMENT BACKGROUND

The Energy Signature Monitor (ESM) was developed as a data acquisition system that integrates measurement, data collection, and compilation and is designed to provide low-cost sophisticated data in a standardized format. The 1981 target per unit cost was $500, which grew to $1500 by 1984 as additional features were added. Information about typical number of sensors and accuracy requirements for large monitoring projects was incorporated into the development of the ESM in order to meet the needs of most researchers without adding unnecessary, and expensive, features. The ESM development philosophy was to minimize the need for technical personnel during normal operation by providing menu-driven software for both data acquisition and management, easy sensor connections by using standard modular telephone connectors, and integrated data storage and retrieval by using a built-in solid-state data module. The easily replaced data module can record a month's worth of data. The ESM can monitor total energy consumption (broken down by end use), as well as related variables as diverse as temperature, lighting levels, indoor pollutant concentrations, office equipment loads, thermostat settings, and door openings.

Based on our field monitoring experience, and conversations with other researchers, it is clear that large-scale monitoring projects typically require only a limited number of sensors per test site, with less stringent sensor accuracy demands than those typically required in laboratory investigations. Within the commonly used A (laboratory grade investigations), B (general real time field monitoring), and C (compilation of utility meter readings) monitoring classifications, the ESM is designed to operate as a class B data acquisition system.

The original ESM design has evolved to its present configuration based on considerable laboratory and field evaluation of a number of prototype units, all of which have been built at LBL. The original concept was for a very simple, 2-4 channel, data acquisition system that would collect only the most critical data for determining a simple energy performance analysis. It was later decided to expand the basic idea to a more versatile, and complicated, system. Six prototype units were assembled during 1983. Although the basic design philosophy worked well, evaluation of these prototypes revealed the need for some major modifications to simplify maintenance and increase system versatility. Twenty-three second generation ESMs have been assembled, all of which were used during the 1984-1985 heating season, and are being used again during the 1985-1986 heating season as part of a field monitoring study currently being conducted by Lawrence Berkeley Laboratory. A description of the ESM system and lessons learned from the ESM development project are given in this report.

DATA ACQUISITION HARDWARE DESCRIPTION

The ESM is a microprocessor-based data acquisition system designed for long-term unattended operation. Data acquisition and communication is controlled by a 6502 central processing unit (CPU) microprocessor with 10K bytes of program memory contained in erasable programmable read-only memory (EPROM) and 2K bytes of random-access memory (RAM) for intermediate data storage.

There are two pulse count input channels, which count the number of TTL level voltage pulses received, and sixteen analog input channels, which will accept a sensor output range of ±4.095 volts. A 12-bit dual-slope integrating analog-to-digital converter (ADC) processes the analog input channels, for an effective resolution of 1 millivolt. A dual-slope integrating ADC, with an integration time of two 60 Hz cycles, was selected over the more common successive approximation ADC because of the ability to automatically eliminate 60 cycle electronic noise that may be superimposed on the sensor signal. The dual-slope ADC conversion rate is limited to 7.5 reading/second, compared to much faster successive approximation ADCs, but that is not important for most long-term monitoring projects involving building energy issues.

Each of the analog channel inputs can be recorded either as an analog millivolt value or as a programmable digital ("ON/OFF") value. The "ON" digital signal is defined as a value that is greater than a user-defined threshold. This allows the use of standard analog sensors, such as a temperature sensor, to also be used as status sensors. An example is the use of a photo cell pointed at the burner of a gas furnace to measure the "ON" time of the burner based flame light intensity. No external hardware comparator circuits are needed, and the threshold value can be easily set in software by the user during equipment setup.

Data acquisition is controlled by an assembly language program which resides in 10K byte of EPROM. During equipment setup the data acquisition program communicates to standard ASCII terminals through a built-in RS-232 interface using menu-driven software. Because the communication program has extensive input prompting and error checking the operator does not need extensive knowledge of the program options and input requirements. Although a computer terminal is used to communicate with the ESM during setup at a test site, it is not required during operation of the experiment. An external telephone modem, connected via the RS-232 interface, can be used to remotely check on the test site during the study.

During data collection the data acquisition program monitors the pulse count channels as interrupts and scans all the analog and digital channels every fifteen seconds. Pulse count channels can record a maximum of 65,535 counts. The total number of pulses for the pulse count channel, the total number of "ON" scans for each digital channel, and the millivolt value for each analog channel are recorded on the data module at the end of each record interval. The record intervals are user seletable to between 1 and 8191 minutes. The analog channel value is recorded either as the average for all the 15-second readings taken during the record interval, or as a single reading based on the last scan of the record interval, depending on a user selectable option.

No software signal conditioning is built into the ESM data acquisition program. The analog sensor outputs are recorded and displayed to a terminal as millivolt values. For ease of use the standard temperature sensors designed for use with the ESM (which are described later in this report) are calibrated to output 1mV/°C, which makes the millivolt display easily readable in engineering units. Signal conditioning and linearization for special sensors must be conducted by external circuits.

Data is stored in 24K bytes of EPROM memory, which is contained on a removable plug-in 3.5 X 5 inch data module for convenient physical transfer to a central data analysis station. The data module can store up to twenty-nine days of hourly averages from a typical full compliment of 18 sensors, which consists of two pulse count sensor, eight analog, and eight digital channels. The use of fewer channels for a monitoring project would mean a proportionally longer recording time per data module. A commercial high-intensity ultraviolet light EPROM eraser can erase a data module in

approximately 15 minutes. It is unlikely that a data module would be accidentally erased in the field.

The data module contains not only the time sequential data for each of the input channels used, but also critical information about the experiment which is required to manage and analyze the data. When the ESM is first setup at a test site the user must input information about the test name, location of the monitored site, type of sensors used, codes for what is actually being monitored, etc. All of this information is automatically recorded on each erased data module before any data is recorded. The field technicians do not have to write any of this information in a log book, and since the information is always available with the data there is little chance of missinterpretation the data. If a new data module is inserted in an ESM, the data acquisition program automatically checks to make sure that it is either fully erased, or that any existing information in the data module is compatible with the test configuration currently entered in the ESM memory. If there is a incompatibility problem when a user inserts a new data module (e.g. a test configuration recorded from another test site, or not fully erased) the ESM will indicate that it has not accepted the data module, and user is prompted to use another data module. This procedure is designed to prevent operator errors which result in lost data.

During normal operation the ESM is line powered, but battery backup power is supplied for RAM memory, clock, and short-term data acquisition. The ESM will continue normal data acquisition operation during a line power failure until the end of the next record interval, at which time the ESM will go into a "sleep" mode. The "sleep" mode, which conserves battery power, can be continued for more than 6 days. The clock remains operational during the power failure, and the ESM will automatically continue normal operation when line power is restored.

Transfer of data from the data module to a microcomputer-based data management and analysis program is accomplished by using an ESM identical to the field units. The standard ESM data acquisition program includes the software needed to read a data module and transfer the data through its RS-232 port to a computer or terminal. When used with the microcomputer-based data management software, the data transfer procedure includes routines to assure error-free data transmission. One of the spare ESMs that would be required for a large monitoring project could be used at the central data processing station to transfer data to a computer.

The original ESM design, which was developed in 1982, has evolved to its present configuration based on two years of laboratory and field evaluation of a number of prototype units, all of which have been built at Lawrence Berkeley Laboratory. The current ESM design, along with a standard computer terminal, is shown in Fig. 1. The computer terminal, which could be replaced by a much smaller portable terminal (e.g. Texas Instruments Silent 700 or Radio Shack TRS- 80 Model 100) is used to communicate with the ESM during setup at a test site and is not required during operation of the test, thus reducing site equipment requirements. Since the ESM was designed for long-term unattended operation, there is no need for a built-in display (except for the front panel's four status indicator lights), a printer, or a keyboard. A removable data module and three ESM operation control switches are located behind the front panel access door. The rear panel has connectors for the sensors, power supplies, and a standard RS-232 connector for communication with a terminal, another computer, or a telephone modem.

DATA MANAGEMENT SOFTWARE

The ESM data management software, designed to be used on a microcomputer at the central data processing station, in conjunction with the data acquisition hardware forms an integrated system which will allow a user to monitor a large number of sites, perform automatic data management on the recorded values, and process the aggregate data into a usable form with a minimum of time and expense. The data management software was written to operate with both CP/M and MS-DOS computer operating systems, which covers most of the commonly used microcomputers. The data recorded on the ESM data module and transferred with each data set includes information which identifies the test site and sensor configuration, which avoids much of the time-consuming cross-referencing with logbooks and installation reports. Transformation of the raw data recorded by the ESM to physical units and management of the data from multiple sites is handled automatically by the data management software. Both the data acquisition and data management software are menu-driven to facilitate their ease-of-use with non-technical personnel. The recorded data can be displayed as individual readings or averages, transferred to other computer programs, or plotted to analyze trends.

It is important to realize that the availability of data management software compatible with the data acquisition hardware is a major cost savings for the monitoring project. The general data management software developed for the ESM required more than two man-years of effort. Such software development is too expensive for a single project, but when supplied as an integral part of the hardware, which was the ESM design intent, the software provides a significant cost savings to a research project.

Although not available when the ESM data management software development was initiated, there are now commercial software packages available which may be useful as the bases of data management systems for future monitoring projects. The use of commercial speedsheet and data base programs, customized for a specific application, or the use of commercial data acquisition/data analysis programs, may be a more productive use of manpower than writing a data management program from scratch.

SENSOR CONNECTIONS

Standard 6-wire modular telephone connectors were built into the ESM for all the sensor connections. This allowed for convenient connection of ESM supplied +5 and +15 volt sensor power, automatic connection of the electric power signal conditioning circuit to the appropriate clamp-on ammeter, and sensor output. Standard 6-wire telephone extension cables, with modular connectors, were used as extension wires to the sensors. The objective was to simplify the field installation of sensors, and make it fool-proof. The modular telephone connectors can be inserted in only one orientation, with the total connection procedure requiring only a couple seconds. This compares to spending a minute or more to strip wires and assure that the correct wire was attached to the appropriate terminal lug, with a good chance of some improper connections. Everyone that has used the ESM has liked this connection concept.

Although the telephone extension cables are not twisted pairs or shielded, no electrical noise problems have been experienced with up to 100 feet long extensions. The integrating ADC is the major reason that electrical noise has not been a problem. Shielded cable and good grounding prac-

tices will become a more important consideration in environments which produce large static charges and have lightning induced electrical noise.

The main problem experienced with the modular telephone extension cables was attachment of the sensors to the telephone wires. The wires are fragile, with nylon threads for reinforcement, which makes for difficult soldering. Although it is not obvious, in order for the modular connectors to work the electrical signal may go from one color wire to another, and back. This can be very confusing, and has resulted in a number of incorrectly wired sensors. The 6-wire extension cable is non-standard, and can be difficult to purchase. A new design, which could be incorporated in future ESM designs, would allow the use of readily available 4-wire telephone extension cable.

SENSOR DESCRIPTIONS

To accommodate the two most common sensor types used by building energy researchers, air temperature and electrical power, two specific sensors were incorporated into the ESM design. The Analog Devices AD590 temperature transducer was used because of its good accuracy and linearity, insensitivity to supply voltage (4 to 30 volts), high output sensitivity (2.732 volt at 0°C, with 10 mV/°C sensitivity), and low cost ($5-$15). The ESM supplied +15 volts at the sensor's modular telephone connector powers the temperature transducer. Field comparisons of ESM recorded average air temperatures have shown the ESM to be within 0.5°C of air temperatures recorded at the same locations by a class A data acquisition system (see Fig. 2). The disadvantages of the AD590 temperature transducers are that temperature values are limited to 150°C, and the sensors must be protected from direct contact with moisture by sealing them in an epoxy or silicone glue.

Commercial electrical power sensors that fully account for power factor effects cost $200-600, which was deemed excessive for the ESM. A simple, inexpensive ($50) clamp-on wattmeter was developed as part of the ESM, with electrical signal conditioning for eight sensors built in to the ESM in order to reduce the cost of multiple electrical power sensors at one site. Unfortunately, field experience has shown that the accuracy is not adequate for most applications and the sensor is too fragile. An improved version of the clamp-on wattmeter has been designed but has not been adequately tested at this time.

Monitoring of gas fired water heater and furnace operation has been successfully accomplished by using either temperature sensors or miniature photocells. Burner operation is detected with a temperature sensor by monitoring the flue pipe temperature, or with a photocell by monitoring the light intensity in the burner compartment. For both of these applications the user selects a digital recording option for an analog input channel. The ESM interprets the sensor value to be either above a user set threshold value, "ON", or below the threshold value, "OFF", and records the total number of "ON" scans during a recording interval.

The AD590 temperature sensors are limited to 150°C, which will not allow them to be placed directly into the burner or the flue. But they can be attached to the outside of the flue pipe. The problem with this configuration is that the appropriate threshold value for the temperature sensors is very dependent on ambient temperature, which can vary for water heaters located in garages during large changes is ambient temperature. The photocell works well as long as it doesn't get over 100°C, which means that it can not be located in a gas domestic water heat burner chamber. The photocell does work in gas furnace combustion chambers, where incoming combustion air can keep the sensor cool.

It was not practical to develop specific ESM interfaces for all of the many sensors that are used by researchers. But, the ESM will accept any sensor that outputs a signal of ±4.095 volts, which means that most sensors need minimal signal conditioning in order to be compatible with the ESM. In addition, +5 and +15 volts are available from the ESM to power the active sensors. The pulse count channels accept standard TTL level voltages (0 - 5 volts).

In order to simplify the field hardware of the ESM, a design compromise was to include all software sensor signal conditioning in the microcomputer based data management program instead of the ESM. All sensor outputs are recorded by the ESM as millivolt levels; there is no built in linearization for non-linear sensor outputs. This means that if time-average values are to be recorded non-linear sensor outputs must be linearized before being connected to the ESM.

FIELD EQUIPMENT INSTALLATION EXPERIENCE

One of the major non-hardware costs incurred in a monitoring project is installation and maintenance costs. By providing simple menu-driven software and very easy-to-use and foolproof standard telephone connectors for all sensor connections the ESM design attempts to minimize the actual time required to install the hardware. But, depending on the monitoring project complexity, installation may still be a major expense. And, it should be evident that even though the installation personnel may be non-technical with regard to the ESM, they must be fully qualified with regard to sensor installation or the results of the monitoring project may be compromised. Three case studies of field equipment installation experiences with the ESM are discussed below, but they are typical of most field monitoring projects. The first case study was a very simple monitoring project close to LBL that was conducted by LBL personnel very familiar with the ESM. The second and third case studies were conducted 700 miles from LBL by field personnel who were under contract to LBL, and had received a one week training session at LBL before beginning the field study. These two cases are typical of experiences with large remote monitoring projects.

The first case study was part of a LBL conducted ESM field evaluation in an unoccupied housing unit that was part of a public housing research project. The housing unit was concurrently monitored with a second, class A, microprocessor based data acquisition system to provide a baseline for comparison. The ESM installation had a total of 16 sensors, which included inside, outside, and attic dry- bulb and dew-point temperatures, weather conditions, and electric power use. Hardware installation and setup required approximately five manhours, although had the housing unit been occupied the installation time would have been a couple hours longer because of the need to assure that all sensor wiring was neatly secured where it would not be accidentally disturbed by the occupants. This housing unit was a one bedroom single-story configuration, which greatly simplified wiring runs.

Installation of ESMs in three additional occupied housing units in the same housing project required only three manhours each due to fewer and simpler sensor wiring configurations (five sensors per site, all inside). In all cases

the ESMs were simply located on a closet shelf, which hid the wiring from the occupants while allowing convenient access for the LBL researchers. Removal of the ESMs from the four housing units required only one manhour each. There was a minimum of interference with the occupants during the field evaluation since LBL researchers were in the units only three times during the study; once during installation, once for data module retrieval, and once for removal of the equipment. There were no occupant complaints about the equipment or sensor wiring.

The second case study involved the monitoring of eight occupied homes in the Portland, Oregon area. This project required the installation of of approximately fourteen ESM monitored sensors per site, which included air temperature, dew point temperature, clamp-on wattmeters, photocells for monitoring furnace operation, a real-time radon monitor, and a weather tower. In addition there were stand-alone particulate samplers and a number of passive air quality samplers. Since the study was to be conducted over a five month period the hardware had to be secured from accidental occupant disturbances. Installation and maintenance was conducted by a LBL trained field contractor in conjunction with a LBL staff member. Installation required approximately 25 manhours per site. Because of some problems with both the ESM and other equipment some of the sites required over 40 manhours.

In addition, there were weekly visits to each site to recover the passive air samplers and ESM data modules and perform regular maintenance. The ESM data modules could have recorded data for up to a month, but weekly checks assured that there would not be excessive data gaps due to equipment failures that were not noticed. The weekly visits required two to three hours per site, mainly for the non-ESM sensor maintenance. By the end of the study some of the occupants resented the investigators' weekly intrusions. An average of five manhours was required for equipment removal.

The third case study involved short-term (two weeks) monitoring of fifty occupied homes at two sites in Washington. This project required installation of sensors very similar to case two described above. A log was maintained by one of the field contractors to give an accurate appraisal of installation time requirements. For these sites, which includes both simple and complex installations, the installation times varied from a low of 14 manhours to a high of 48 manhours, with an average of 29 manhours. Most of the low installation time sites were due to unusually easy access and no weather tower installation. Removal times averaged five manhours.

Problems incountered during the short-term testing program, where the loss of significant data is unacceptable, made it evident that the ESM needed a watchdog timer. A watchdog timer would automatically restart the ESM if any problem prevented continued data collection operation. All the ESMs are now being retrofited with watchdog timers.

The reason for discussing these three case studies is to emphasize the fact that field monitoring scheduling and cost estimates must include appropriate field installation and maintenance estimates. Historically researchers have greatly underestimated the non-hardware cost of field monitoring projects.

ESM TECHNOLOGY TRANSFER

The goal of the ESM development was to provide the design specifications to private industry in order to stimulate the production of a commercial product in an area where there was a need, but no product. LBL staff has built 23 ESMs as part of the design evaluation and for use in two research projects, but there are no plans for LBL to provide ESMs to outside researchers. The process of technology transfer of the ESM design to a private sector company willing to market a commercial version of the ESM was initiated during 1984. Based on an information package mailing by the LBL Office of Research and Technology Applications Office there were two private sector companies which were interested in working toward development of a commercial version of the ESM. The companies were willing to learn from the field experience of the LBL prototypes and design advanced features into the production units before they went to market.

Both companies greatly underestimated the development effort required to transform the LBL prototype design into a viable commercial product. There is a very large gap between a laboratory prototype that works under the guidance of familiar technical personnel and a commercial product that must survive the real world. Both private companies have discontinued development of a commercial ESM due to the higher than expected development costs, and because the excessive delays have reduced the opportunity in the market place. During the last year a few independent commercial products have appeared on the market which fill most of the ESM hardware specifications for unit costs of $2000-$3000. Unfortunately, the commercial products do not address the issue of integrated micro-computer data management at this time.

Since the total market may not be large enough to justify development of another such data acquisition system LBL has discontinued efforts at ESM design technology transfer to a private sector company.

MONITORING INSTRUMENTATION SURVEY

Because of our experience in field monitoring and the ESM development program we regularly receive numerous requests for assistance in locating the right data acquisition system for a particular project. Many researchers are not aware of the data acquisition equipment on the market, with their widely varying characteristics and prices.

LBL has begun a project to survey the existing commercial monitoring instrumentation and categorize the equipment by its capabilities, usefulness, and cost. During the next six months LBL will be compiling a list of information for numerous commercial data acquisition systems; to be published next year. This report will also give criteria for deciding which equipment package, from the many different options currently available, is suitable for which user needs.

CONCLUSIONS

LBL has developed the Energy Signature Monitor in response to a demand for a low-cost data acquisition system capable of class B monitoring of large-scale long-term sites. The ESM design attempts to reduce the cost of monitoring by using state of the art electronics, sophisticated menu-driven data acquisition software, foolproof easy-to-use sensor connections using modular telephone connectors, and integrated data management software designed to operate on a microcomputer. The complete ESM design, hardware and software, will fully support going from field recorded data to final data analysis. Operator training is minimized by simplifing the operating procedure, using foolproof hardware designs, and using menu-driven software. Although standard temperature and clamp-on wattmeters were developed for the ESM, any other sensor with ± 4.095 volt output can be connected. With

most sensors a minimum of external signal conditioning is required.

Comparisons of ESM recorded data with a class A data acquisition system showed that the ESM, although not as versatile as the more sophisticated class A system, is sufficiently accurate when recording hourly averages of environmental parameters such as temperatures or voltage outputs from other sensors. More accurate electric power sensing from the built-in clamp-on wattmeter signal conditioning circuit must await development of an improved clamp-on wattmeter design.

Although there have been 23 ESMs built at LBL as part of the design evaluation and for use in LBL conducted research projects, there are no plans for LBL to provide ESMs to outside researchers. The two private sector companies that initiated a commercial product development based on the ESM have been unsuccessful, mainly because of undercapitalization. LBL is not actively pursuing any further ESM technology transfer.

As an extension of the ESM development effort LBL has begun a project to survey the existing commercial monitoring instrumentation and categorize the equipment by its capabilities, usefulness, and cost. During the next six months LBL will be compiling a list of commercial data acquisition system specifications to be published next year. This report will also give criteria for deciding which equipment package, from the many different options currently available, is suitable for which user needs.

REFERENCES

1. Frey, Donald J. and Holtz, Michael J., *Use of Microcomputers for Performance Evaluation of Residential Buildings*. Proceedings National Conference on Microcomputer Applications for Conservation and Renewable Energy, Tucson, Arizona, February 26-28, 1985, University of Arizona (1985).

2. Henderson, Jon and Holtz, Michael, *Evaluation of Prototype Low-Cost Data Acquisition Systems for Performance Monitoring of Passive Solar Buildings*, SERI/RI-721-869, Solar Energy Research Institute, (1981).

Table 1. List of Energy Signature Monitor (ESM) specifications.

Processor	Rockwell or Synertek 6502, 8 bit CPU.
Program Memory	10K bytes of EPROM, 2K bytes of RAM, data acquisition program written in assembly language.
Communications	Built in RS232 interface, switch selectable to 300, 1200, or 9600 baud.
Analog to Digital Converter	Intersil 7109, 12 bit, dual slope integrating, ±4.095 volt input range, with a 1 millivolt resolution.
Sensor Channels	16 analog channels, all of which can be recorded as millivolt values or digital "ON"/"OFF" values based on a user set threshold.
	Two pulse count channels, optically isolated, TTL (0-5 volts) pulses, record a maximum 65,535 counts.
Data Storage	24K bytes of EPROM on a removable data module (3 x 5 inch PC card), stores one month's worth of data from a typical full complement of channels recorded hourly (13,800 points). Data retrieval is made with a standard ESM.
Battery Backup	One 12 volt gel-cell (lead acid) battery which provides one hour of full operation and one week operation of clock and internal RAM memory.
Power Source	One 24-volt plug-in wall transformer and one internal transformer.
Data Management Program	Written in Pascal to operate on CP/M and MS-DOS micro-computer operating systems, requires a minimum of 64K bytes RAM, data management limited by available disk memory.

Figure 1. The Energy Signature Monitor shown connected to a video terminal.

XBL 851-1052

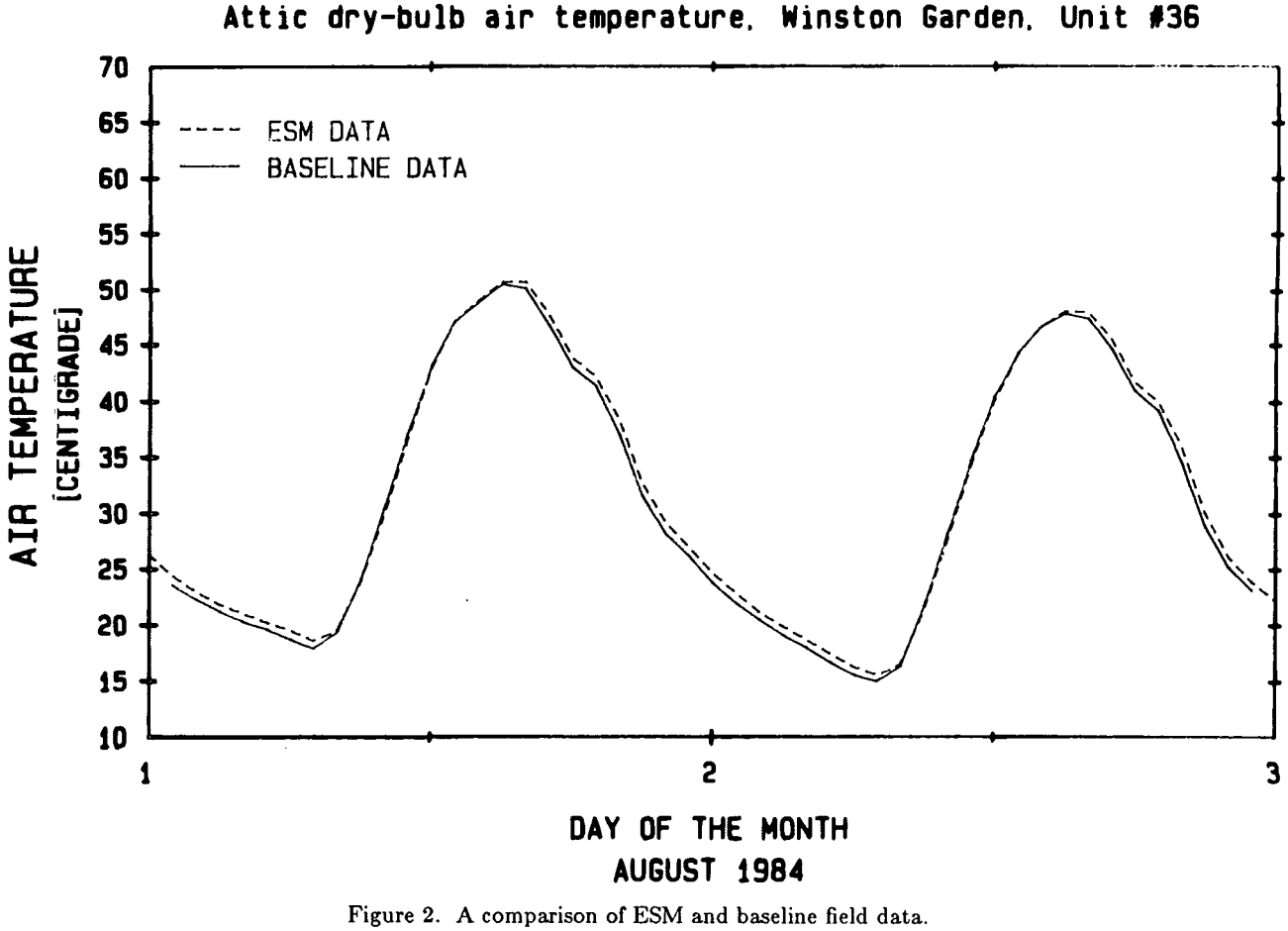

Figure 2. A comparison of ESM and baseline field data.

Applications of Microcomputers in Data Collection*

William P. Levins
Energy Division
Oak Ridge National Laboratory
Oak Ridge, Tennessee

Abstract

The recent advent of microcomputers into the business and scientific world has changed the way in which many tasks are done. The microcomputer allows many things to be routinely accomplished which would have been rejected several years ago because of time and expense restrictions. One application of microcomputers which has opened up new worlds of adventure has been in the field of data acquisition and analysis. When integrated into a data acquisition system, the microcomputer can facilitate and enhance the process of both collecting data and analyzing it.

The hardware and software for two different applications of data acquisition systems involving microcomputers coupled to data loggers are described herein. The first system utilized the IEEE-488 interface bus, and was used to monitor the performance of a heat pump water heater on a 24 hour per day basis. The second system used asynchronous serial communication via an RS-232-C interface to continuously monitor the energy usage and interior conditions of a single-family residence as well as the ambient weather conditions.

These two applications of microcomputers coupled to data acquisition systems illustrate that microcomputers can add a great deal of sophistocation, ease of use, and reliability to the data collection and analysis processes.

On-Site Data Collection and Analysis

Figure 1 is a photograph showing a data aquisition system used to monitor the performance of four water heaters in the laboratory. Three of the water heaters were heat pump water heaters, and the fourth was a conventional electric resistance water heater. A testing program was set up in order to simulate actual 24 hour home usage (water consumption), with the same cycle imposed upon each water heater. The water heaters would sequentially undergo the same water draw at programmed times.

The data acquisition system consisted of modular components interconnected with each other by means of the IEEE-488, or HPIB (Hewlett-Packard Interface Bus). This interface bus is a parallel-type bus which allows data to be sent along 16 signal lines at speeds up to 25 kilobits per second. Each instrument (as many as 14 may be connected to one bus) is connected to the bus via a cable connected to any other instrument already on the bus. Only one active microcomputer is allowed on the line at any time acting as the controller. Each instrument on the line has an address number (set by the user via a dip switch on each instrument) by which the microcomputer controls the function of the instrument and its status as either a talker (sending output to the bus) or a listener (receiving input from the bus).

ORNL–PHOTO 7491–81

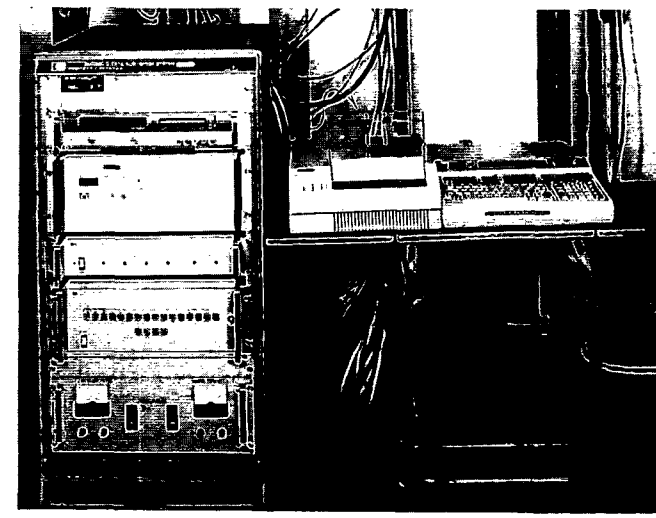

Figure 1. IEEE-488 Bus Data Acquisition System

Shown in the console in Fig. 1 from the top down are

- a digital clock
- a digital voltmeter
- a scanner
- an interface box for the multi-programmer
- a multi-programmer
- an unterruptible power supply/power line conditioner.

On the table beside the console is a printer and the microcomputer which controls the entire bus.

The uninterruptible power supply/power line conditioner is not connected to IEEE-488 bus, but supplies power to the whole system. Uninterruptible power supplies (or battery backed-up equipment) are a necessity for any system which runs unattended for long periods of time. Many seemingly

*Research sponsored by the Office of Buildings Energy Research and Development, U.S. Department of Energy under contract DE-AC05-34OR21400 with Martin Marietta Energy Systems, Inc.

unexplained problems in the operation of this system disappeared forever, never to return again (thank goodness!) when the uninterruptible power supply/line conditioner was integrated into the system.

The function of the digital timer was to obviously to keep time. The microcomputer initiated its commands to the other instruments based on the input from the timer.

The digital voltmeter measured the analog output voltage signals from the various thermocouples and other devices on the system. The range interval of the voltmeter was controlled by the microcomputer.

The scanner is the instrument which acted as the switch which connected the output signal from whichever data channel the microcomputer asked for to the interface bus, where it could be read by the digital voltmeter. All of the final or conditioned outputs of the data channels were connected to the scanner. A conditioned output is a sensor output which has undergone some type of conversion, such as changing a frequency to a voltage (digital-to-analog voltage or D-A conversion). The scanner also contained an internal reference junction on each thermocouple input card so that thermocouple inputs could be converted to the proper temperature readings by the computer.

The multi-programmer allowed the computer to control the operation of various relays which in turn controlled the operation of solenoid valves on the outlet lines of each water heater. Flow control valves were also in series with the solenoid valves, so that the time each solenoid valve was open determined the amount of water which flowed out of each water heater.

In operation, the microcomputer scanned the digital clock until a predetermined time was met. The microcomputer then sent out a signal to the multi-programmer to close the relay which controlled the coil voltage to a solid state relay which in turn controlled the 110 volt supply voltage to the solenoid valve of a given water heater. The solenoid valve opened and the microcomputer sent signals to the scanner to switch on certain thermocouples at specified time intervals. After the scanner put the thermocouple signal on the bus, the microcomputer set the digital voltmeter to a certain range and had it read the thermocouple output voltage. The microcomputer then read the signal from the digital voltmeter and stored it in a numerical array in its memory. The scanner was then switched to the reference block temperature, the digital voltmeter read this signal and passed it to the computer, which stored the value in its memory. The microcomputer then read the clock to check to see if the time for closing the solenoid valve had arrived.

When one valve was closed, the same procedure was followed for the next valve until all the water heaters had undergone the same draw. The computer then computed the temperatures for all of the voltage readings it had taken, stored the processed information on a tape cartridge contained in the microcomputer, and calculated the average inlet, outlet, and ambient air temperatures for each water heater. Next the computer sent the summary information for the cycle to the printer, which printed it out. The microcomputer again checked the time and if the end of an operational day had been reached, all of the data stored on tape for that day were reread and averaged. A summary output for each day was then printed by the printer. Figure 2 shows the printer and Table 1 contains a sample of the daily output produced by the printer.

The previous discussion is a good example of a system which is able to do on-line, or real-time data reduction and analysis along with the data collection. The microcomputer was in complete control of the system at all times and did an excellent job of it. After the uninterruptible power supply was added to the system, the reliability of the system was virtually 100% for about a year of 24 hour per day operation.

The advantages of the IEEE-488 bus are that it is relatively easy to set up and get working. There are many extremely accurate and reliable instruments available with this interface. Most tend to be high-end (somewhat expensive, but no more so than other instruments with equal capabilities) but the variety and quality are excellent.

Although cost is probably the chief disadvantage, some relatively lower-priced instruments are available.

ORNL–PHOTO 7014–81

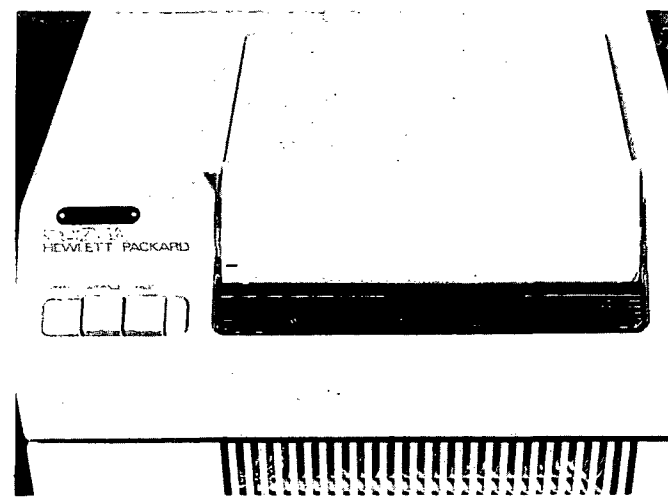

Figure 2. Printer with On-Site Data Processing Results

Attractively-priced "add-on" cards which are able to be "plugged into" the data busses of IBM and compatible computers are also being offered by several manufacturers. Such interface cards will make the IEEE-488 bus more attractive, since the great variety of existing software for these computers will allow the collected data to be easily imported (put in a format usable by the software) and analyzed.

Data Collection Using a Serial Interface

The serial or RS-232-C interface is a popular interface which is available for most present-day microcomputers. As such it offers an excellent way for a microcomputer to communicate with a variety of instruments. The serial interface sends information one "bit" at a time in an asynchronous (not necessarily evenly timed) manner along a cable at data transfer rates of up to 19,200 baud. A baud is essentially equal to one bit per second. As a rough

Table 1. Summary of Heat Pump Water Heater Testing for 5/27/81

	EUS Cycling Temp (°F)		MOR-FLO Res Temp (°F)		EUS HT Pump Temp (°F)		FDRS 82HP Temp (°F)		Air Temp
Time	Out	In	Out	In	Out	In	Out	In	(°F)
1800	131.8	69.1	140.6	65.4	143.3	64.4	137.4	63.2	86
1900	133.6	64.7	140.9	63.9	145.0	63.8	149.8	63.0	85
1930	133.4	65.5	140.0	64.4	144.5	63.8	141.3	62.8	84
2200	133.3	69.3	138.9	65.7	143.4	64.5	148.0	63.2	85
2230	134.4	66.4	140.7	64.7	144.6	64.2	150.5	63.4	84
700	132.2	68.9	139.7	65.1	143.2	64.2	139.9	63.1	83
730	133.9	66.1	140.9	64.5	144.6	64.1	143.9	63.4	82
930	133.9	64.9	140.7	63.8	147.1	63.6	148.1	62.9	85
1200	133.7	68.2	139.8	64.8	144.8	63.9	150.5	62.7	84
AVE	133.5	66.3	140.4	64.4	145.0	63.9	146.5	63.0	84

The average daily temperature was 84

EUS CYC RES KWH METER	5162.8	USAGE TODAY	13.8
EUS CYC HP KWH MTR RDG	2940.2	USAGE TODAY	0.0
EUS CYC WATER MTR RDG	180166.1	USAGE TODAY	67.3
MOR-FLO RES KWH MTR RDG	6578.0	USAGE TODAY	16.4
MOR-FLO WATER MTR RDG	48029.6	USAGE TODAY	67.9
EUS HP KWH MTR RDG	7994.1	USAGE TODAY	7.6
EUS HP WATER MTR RDG	41613.2	USAGE TODAY	65.8
ETECH KWH MTR RDG	673.3	USAGE TODAY	10.8
ETECH WATER MTR RDG	231858.4	USAGE TODAY	69.8

The first temp storage file # is - 19.00
The last temp storage file # is - 27.00
The previous meter rdgs are in file # - 28.00

TO CONTINUE PRESS "RUN"; THE FIRST FILE # IS - 29.00

guideline, each character (be it a letter, single digit, comma, space, etc.) sent in ASCII (American Standard Code for Information Interchange) format usually requires about 10 bits (including start and stop bits) for definition, so each 100 baud is approximately equal to ten characters per second. The use of high-speed baud rates is desirable in serial transmissions, but for error-free service, the quality of the lines over which the data are transferred as well as the capabilities of the equipment being used often limit the usable baud rate.

Data acquisition systems were set up in three houses in order to monitor the energy usage and existing conditions in and around each house on a continual 24 hour-per-day basis. Figure 3 is a photograph of the houses. Figure 4 is a photograph of the data acquisition system console. Proceeding down from the top, the console contains

- a watt-hour meter interface
- a weather station interface
- a data logger
- an interface box for several sensors
- a power line conditioner.

Not shown in the picture, but located behind the console is an uninterruptible power supply which is connected between

ORNL–PHOTO 0167–86

Figure 3. Three Homes Used in Energy Monitoring Experiments

ORNL–PHOTO 0168–86

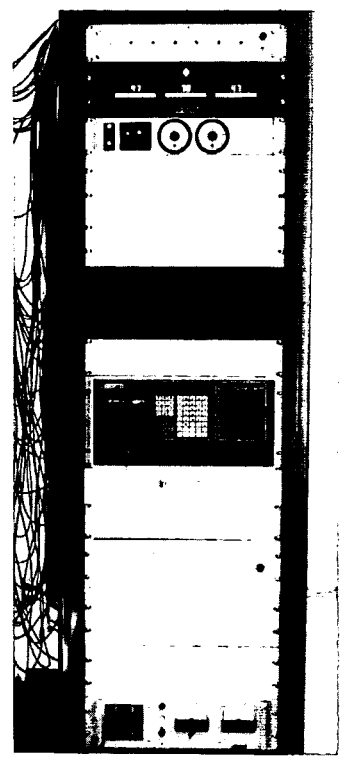

Figure 4. Data Acquisition Console Using Serial Interface

the power line conditioner and the data logger. Once again, uninterruptible power supplies are indispensible for systems which run for long periods of time, especially if they are unattended!

Figure 5 is a photograph of the data logger used in the experiment. The data logger scanned approximately 50 channels of data every 30 seconds, converted the thermocouple voltage readings to temperatures, converted (linearized) several other analog voltage signals to the proper values, and sent the data to the microcomputer shown in Fig. 6 via the RS-232-C serial cable at 1200 baud. The data logger had many more "smarts" capabilities, but they were not used because the computer was able to do such things much faster and more efficiently than could the data logger.

ORNL–PHOTO 0169–86

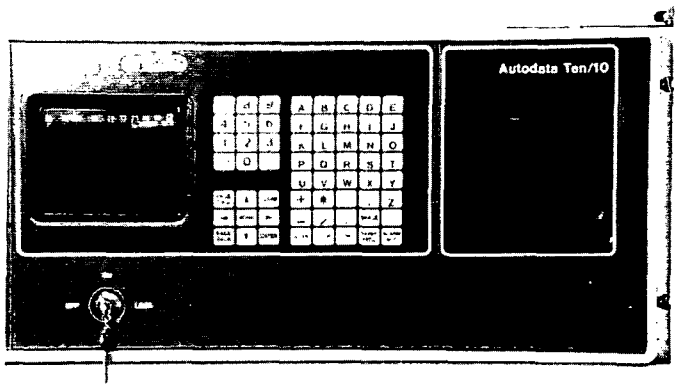

Figure 5. Data Logger Used in Energy Monitoring Experiments

ORNL–PHOTO 0187–86

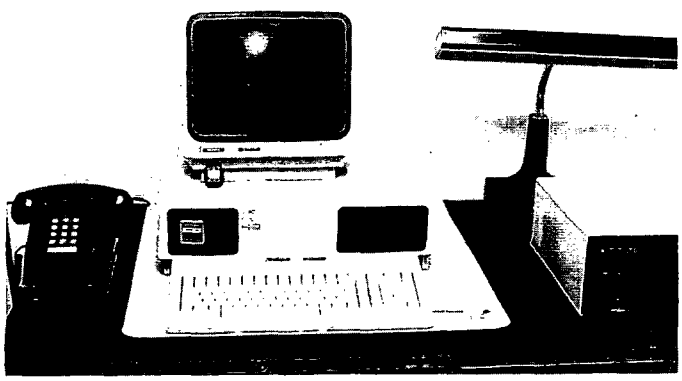

Figure 6. Microcomputer Used in Energy Monitoring Experiments

As a brief aside, Figs. 7–9 are photographs which show some of the sensors used in the experimental work. The wet/dry bulb apparatus shown if Fig. 8 was built because the relative humidity sensors shown in Figs. 7 and 9 did not maintain sufficient accuracy over their range span.

ORNL–PHOTO 0170–86

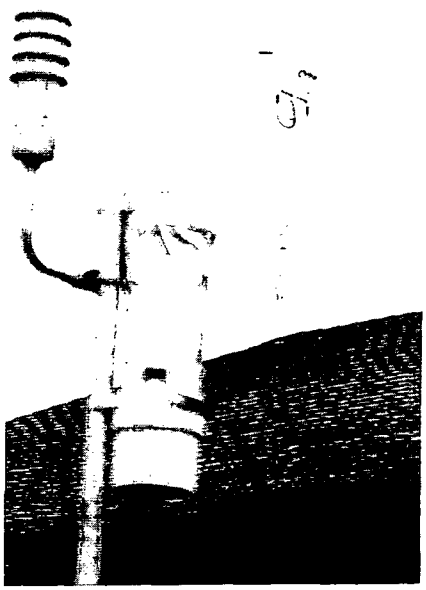

Figure 7. Outdoor Weather Station Sensors

There was no error checking between the computer and the data logger since they were "hardwired" together with the serial cable. (Error checking usually involves adding up the ASCII sum of a given number of characters, putting them into "packets"2, and sending them over the line to the computer along with the sum. A "handshake" protocol is then set up between the computer and the data logger whereby the the computer either sends an "OK" to the data logger to send another packet, or requests the previous packet be retransmitted.) The data has been visually checked many times, and only one instance of a possible significant transmission error has been found in about one and one-half years. Therefore, one can assume that hardwired systems have the potential to be very reliable.

ORNL–PHOTO 0171–86

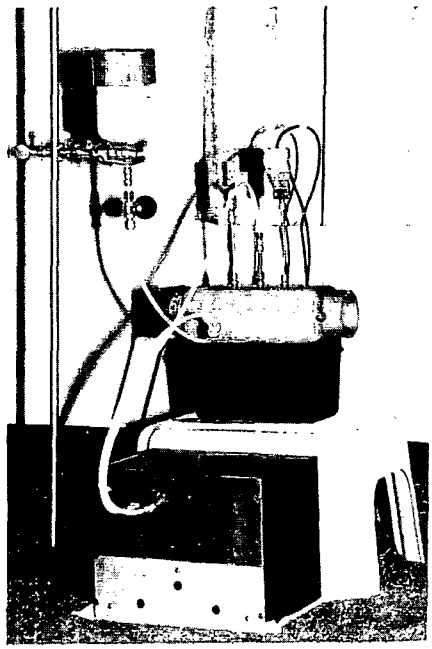

Figure 8. Wet/Dry Bulb Temperature Monitor

ORNL–PHOTO 0172–86

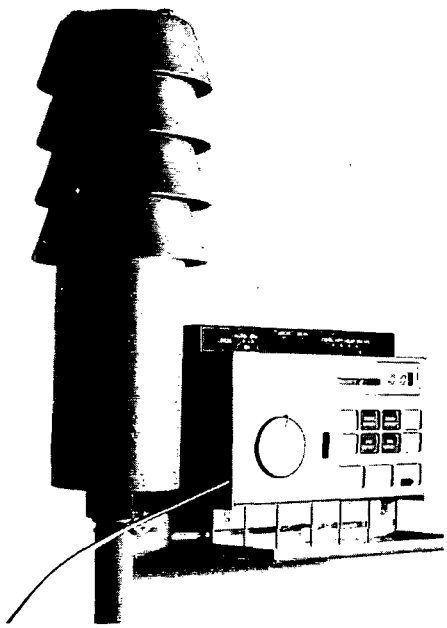

Figure 9. Thermostat with Humidity and Temperature Sensors

The data is received by the computer in a section of memory called the communications buffer. About ten channels of data are able to be held in the buffer before it starts to overflow. Any data overflowing from the buffer is gone, so one must be sure to adjust the "timing loops" or frequency of data channel retreival from the buffer so that no data is lost. Some trial and error is necessary for this as it depends upon some of the idiosyncrasies of each instrument, but the proper values are relatively easy to obtain.

Once the data is in the computer it is up to the programmer to arrange it in the manner which is most suitable for his purposes. It can be as embarrassing to have too much data as it is not to have enough, especially if the data is not well organized and cannot be easily retrieved. The design of both the experiment should include such items as the frequency of data scans and data storage. The microcomputer used in this experiment had disk drives, each of which was capable of storing over two weeks worth of data, but the disks were changed each week. One weeks worth of data was a convenient amount of data to handle at one time, and had something gone wrong during that time period, a one week data loss would be the maximum. Usually the further one is away from his data system, the less reliable is the data collection.

The program used to control the data acquisition in this experiment checks to determine if the data flow is in the proper sequence, and writes messages both on the screen and to the disk if something goes amiss. Also, there is a maximun number of errors allowed before the computer terminates the data collection.

One of the instruments used in the experiment measures the amount of sensible heat from the HVAC (Heating Ventilating and Air Conditioning System). The instrument receives input from two averaging platinum RTDs (resistance temperature devices), one on either side of the HVAC, and also from an anemometer. It then electrically subtracts the differences of the RTDs and multiplies them by the anemometer digital input reading and outputs a digital reading to the computer. Such an instrument is extremely useful when using a heat pump for an HVAC. The data collected when heating the house with resistance heat can be used to calibrate the "BTU" meter as is shown in Fig. 10. Since the heating load of the house must be determined by operating on resistance heat, it is useful to be able to obtain a calibration curve for the "BTU" meter over the same period.

ORNL-DWG 85-16625

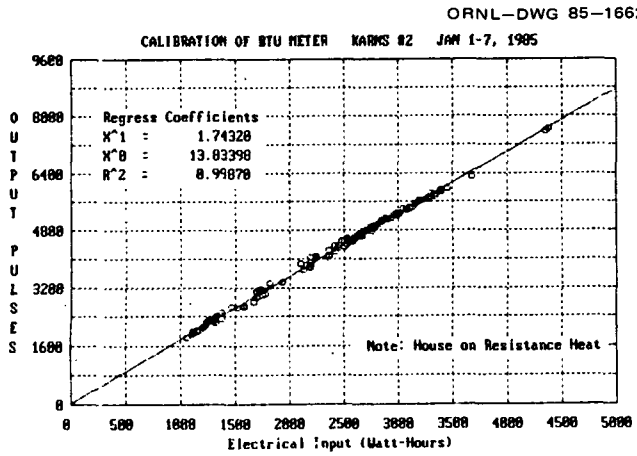

Figure 10. Calibration of BTU Meter Card

Examples of plots which can easily be obtained from graphic screen dumps to a dot matrix printer of well-organized data are shown in Figs. 11–14. Plots such as these can be obtained within the hour after removing the data disk from the microcomputer. However good planning and well-organized data is necessary in order to do this.

ORNL-DWG 85-16626

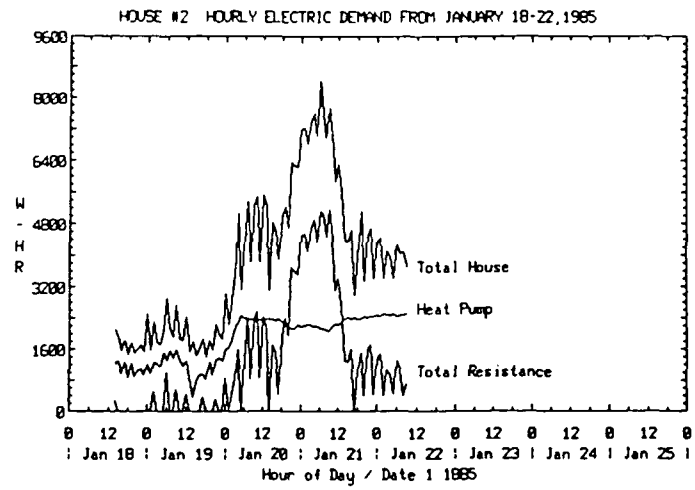

Figure 11. Hourly Electric Demand of House

ORNL-DWG 85-16627

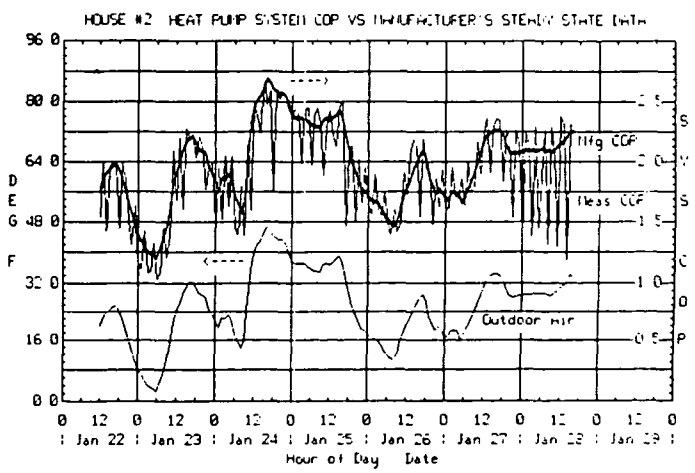

Figure 12. Measured Heat Pump COP vs Outdoor Air Temperature

Internal "Add-On" Card Data Acquisition

One other type of system which utilizes a microcomputer is the "add-on" or "plug-in" data acquisition system card. These cards merely plug into the data bus of primarily IBM and compatible microcomputers. They can usually accept from 8 to 16 data channels and are relatively inexpensive compared to data loggers. However, they cannot accept the direct outputs of all types of sensors without some previous conditioning. They usually work best with input analog voltage signals from −5 to +5 volts. Digital signals may

ORNL–DWG 85–16628

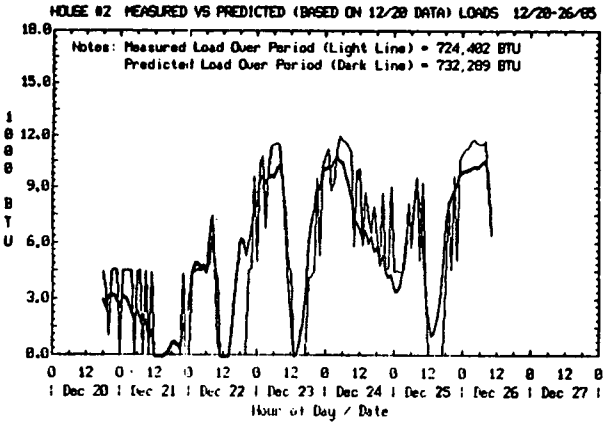

Figure 13. Measured vs Predicted House Loads

ORNL–DWG 85–16629

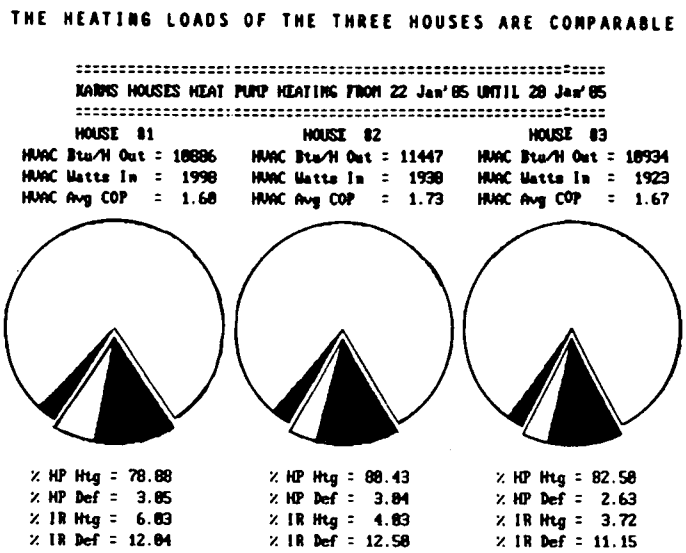

Figure 14. Pie Chart Summarizing Experimental Results

also be input into some. Measurement accuracy is usually on the order of 2 to 3 millivolts for the better cards, although better accuracy may be had for more expense.

Figure 15 is a photograph of a tracer gas analyzer used to monitor the infiltration rate of residences. Included in the photograph is a digital voltmeter and a timer. The digital voltmeter was connected to a micro-computer (not shown) via the IEEE-488 bus. The timer controlled the sampling rate and the computer read and stored the voltages from the digital voltmeter. An appplication such as this would have been ideal for an "add-on" card as the output of the tracer gas monitor was well-matched to that of the card. The digital voltmeter and timer would not have been needed in order to conduct the tests.

Although not used by the author, data acquisition cards appear to provide an attractive means of collecting data for many types of experiments.

ORNL–PHOTO 0173–86

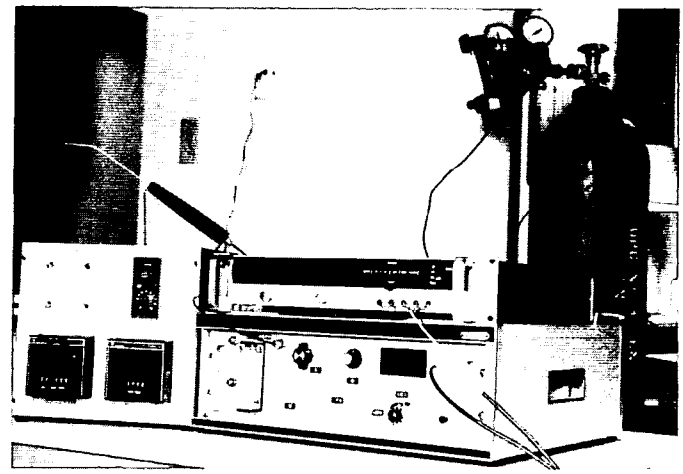

Figure 15. Tracer Gas Analyzer for Infiltration Measurements

Summary

The microcomputer has proven to be an extremely useful tool in both the data acquisition and the data analysis aspects of several experiments at Oak Ridge National Laboratories. It can work in conjunction with a data logger or other data acquisition equipment via different interface busses to both control an experiment and to store the results on internal floppy disks or tapes. Some degree of on-site or real-time data reduction is also possible so that the stored data files can be easily used for further data analysis. "Add-on" data acquisition cards which plug into the data busses of microcomputers may also provide a satisfactory method of collecting data.

Session IV

DATA PROCESSING AND ANALYSIS

An Experiment with a Remote Data Sharing Network

Charless W. Fowlkes
Fowlkes Engineering
Bozeman, Montana

Fredrick M. Cady
Micro Electronic Systems
Bozeman, Montana

Abstract

This paper describes the initiation of an energy monitoring experiment in which the experimental, real-time, site data is available to anyone having a personal computer, modem, and a telephone. We propose that the existance of this of demonstration facility will have a variety of educational benefits.

A demonstration data acquisition system has been set up on a residence in Bozeman Montana. This building has no furnace and uses passive solar for 75% of its space heating requirements. Twelve sensors which measure several temperatures, humidity, insolation, wind speed, etc. are connected to the remote data acquisition system.

Each eight seconds the data acquisition computer measures the outputs of twelve sensors and at the end of each hour, the (450) samples from each sensor are averaged and saved in memory. The computer has enough internal memory to contain the last two weeks' hourly data at any one time. The User can call this system at any time and command the data acquisition computer to send any of the monitoring data presently in it's memory.

This paper describes the sensor arangement and the commands that are sent to the Data Share system to make it transmit it's data. Examples are given to explain the protocol and the format of the data.

Introduction

This work is one result of an interest in measuring things around buildings and the challenge of trying to "do more with less". The general concept of a remote data logger is certainly not new or unique. Systems which did these functions were available and being used over ten years ago. These earlier systems might have cost $30,000, weighed 200 pounds, and have required a professional programmer to make them run and a part-time technician to keep them running.

For contrast, the remote data acquisition system used in the Data Share Demonstration is a portable "lap" computer running a BASIC program connected to a data acquisition module the size of a portable voltmeter, Figure 1. This system weighs about 4 pounds and will fit into a briefcase. The system costs around $1,500 and will probably run for months without attention.

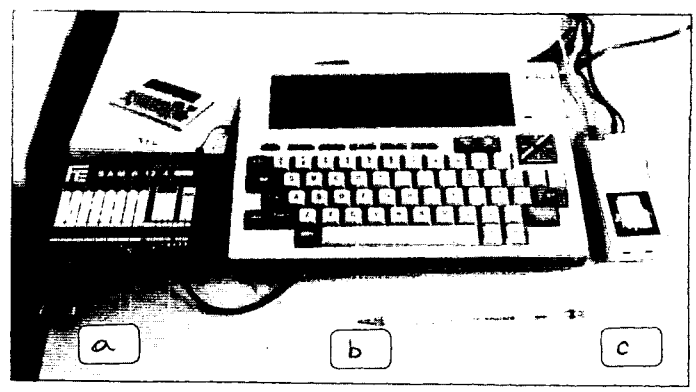

Figure 1. Data acquisition system running Data Share Demonstration

(a) SAM 8.12.4 Portable Data Acquisition Module
(b) Portable Computer, 32K RAM
(c) Auto-answer modem, 300 baud

With experimental tools like this available at a reasonable price experimenters should learn how to use them. The thrust of the Data Share Demonstration is to provide a mechanism to encourage you to participate and learn.

Passive Solar Demonstration House

The residence instrumented for this demonstration was built in 1976 as an experiment in passive solar space heating. There are about 2,600 sq. ft. of heated living space on two floors. The envelope has R20 walls, an R40 ceiling, a continuous plastic vapor barrier, and a conventional number of double glazed windows.

The passive solar aperature is double

glazed and has an area of about 500 sq ft. Twenty fiberglass tubes, containing 4,000 gallons of water, stand behind the solar aperature for heat storage. An R5 insulating curtain is stored on a roller above the tubes and is put down at night or during cloudy winter weather. When the house temperature drops below about 60 deg F a wood stove is used. A small greenhouse and a sunspace share the south wall with the passive solar aperature, Figure 2.

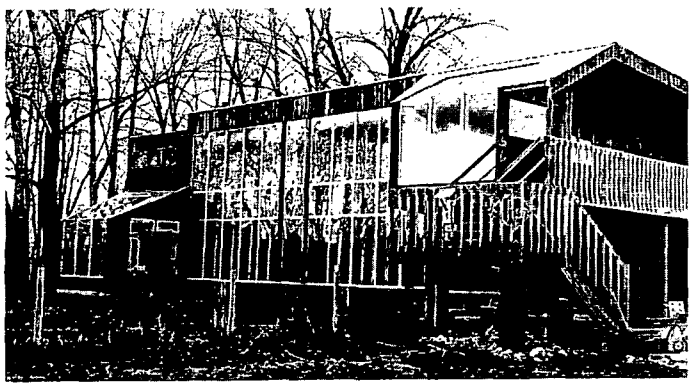

Figure 2. Photograph of passive solar demonstration house

Extensive monitoring plus 8 year's experience has shown that about one and one-half cords of pine are needed each year for auxiliary heat. On an annual basis, the sun supplies about 70-75% of the space heat. The wood stove and internal gains supply the remaining 25-30%. The average inside temperature is 68 to 70 degF. At the end of a sunny day the inside temperature is about 78 deg F and in the early morning about 62 deg F. (If you call the Data Share Demonstration, you will of course be able to see some of this behavior for yourself.)

Instrumentation on Demonstration House

The schematic drawing in Figure 3 shows the sensor arrangement on the demonstration house. The sensors are identified by a channel number in the list under the sketch. You will notice that the sensor layout is somewhat arbitrary and incomplete. We are not suggesting that this represents an integrated monitoring methodology. At this point we intend to primarily demonstrate the method of making the measurements.

File Structure in Data Share Computer

The two most important data files maintained in the site computer are; (a) a data file directory, and (b) daily data files. The data file directory is simply a list of daily data files currently contained in the memory of the computer. The names of each file are a five-digit number. The first digit identifies the site, the second digit identifies the year, and the last three digits are the Julian day number. For example, the file name "35002" is translated as "data from site 3 for January 2, 1985".

Each (full) daily data file has 25 lines. The first line, or header, is simply the file name. The remaining 24 lines are the hourly average sensor data for each hour of the day. This structure is illustrated in Figure 4 below.

```
(header)       SYDAY
(data lines)   01 D0 D1 D2 ..........Dn
               02 D0 D1 D2 ..........Dn
               ...
               HR D0 D1 D2 ..........Dn
               23 D0 D1 D2 ..........Dn
               00 D0 D1 D2 ..........Dn
               where:
               S = Site identification
               Y = Last digit of year
               DAY = Julian day, 001 to 366
               Hr = Hour data ends, 00=midnight,
                    13=1PM, etc.
               Dx = Sensor data times 10 as
                    integer there are
                    n+1 sensors
```

Figure 4: The structure of a daily data file of hourly averages

To save memory space and data transmission time, sensor data is multiplied by 10 and stored as an integer. Subsequent data processing programs can easily un-do this simple conversion. An example line of data (four temperature sensors in system) is:

19 3 -243 19 101

Meaning: "Between 6 and 7 PM, the average temperatures were 0.3, -24.3, 1.9 and 10.1 degrees."

Each digit in a line of data is represented in ASCII code, numbers are separated by a single space, and the end of the line of data is followed by a carriage return and linefeed.

Command Vocabulary

The site computer's primary task is to read sensors and log data. It normally reads and updates all channels each (approximately) 8 seconds. After each scan it checks it's modem to see if it has been "called" by another computer. If another computer has called, the site computer temporarily branches to a communications subroutine and sends a prompt character "@" which means "OK, I'm listening.". At this point the site computer will accept any of the four commands listed below. Each command is a single upper or lower case alphanumeric character (without quotes).

UNDERSTANDS	ACTION TAKEN BY SITE COMPUTER
"A" = Abort	leave communication program, go scan sensors
"B" = Backup	retransmits last message
"C" = Continue	transmit next line of data in proceedure
"x" = file request	start sending file corresponding to code "x" (files are coded "a", "b", "c",..."x") Note that these are lower case characters.

When the site computer sends you the prompt "@" it simultaneously starts a timer. If the calling computer has long pauses between commands, the timer will eventually run out and the site computer will jump back to it's main program, update the readings of all sensors, and then send out another "@". If you were in the middle of a file you will have to start again from the top of the file. The site computer always jumps back for a sensor scan at the end of each file. These features prevent the calling computer from interrupting the data collection process for periods greater than about 30 seconds.

The site computer has a "speaking" vocabulary, listed below, which consists of four characters. The file directory, the sensor data files, and these four characters are all that the site computer can transmit.

SITE SENDS	THIS MEANS
"@" = Prompt	I'm listening and ready to begin talking
"A" = Abort	I'm aborting this to go scan sensors
"B" = Backup	Your command didn't make sense, send it again
"D" = End of file	I hit the end of that file, (I am aborting too)

Error Checking and Recovery

Computers are fast but, unfortunately, are not too intelligent. If a character gets lost or scrambeled by the phone system a human can usually synthesize a replacement from the context and go on while a (simple) computer program may get hopelessly lost and cease to function. Even within this relatively simple

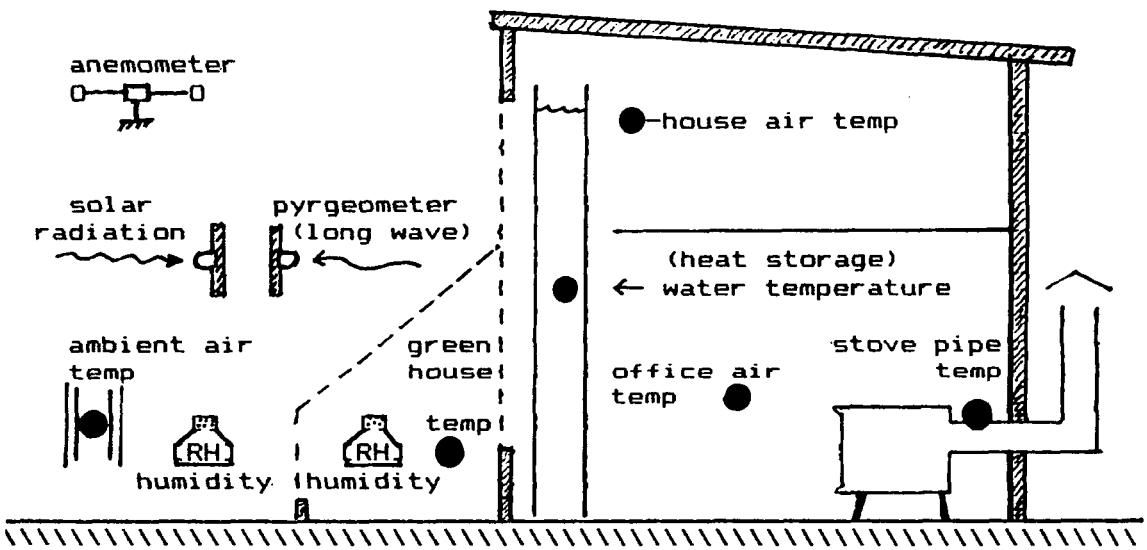

CHANNEL	QUANTITY	UNITS	NOTES
0	Insolation	Btu/sq ft	Eppley PSP, vertical
1	Ambient RH	% RH	(poor quality RH sensors,
2	Greenhouse RH	% RH	off scale at high RH)
3	net IR rad	Btu/sq ft	Eppley pyrgeometer
4	Wind speed	Miles/hr	Near greenhouse
5	nothing		(sensor test channel)
6	Temperature	deg F	House air upstairs
7	Temperature	deg F	Stove pipe surface
8	Temperature	deg F	Heat storage water wall
9	Temperature	deg F	Office air downstairs
10	Temperature	deg F	Greenhouse air
11	Temperature	deg F	Outside (ambient) air

Figure 3. Sensor Arrangement and Channel Identification

task of sending a few pages of data there are a number of ways in which communications can go astray. These traps show up when you begin to automate the data collection using computers. The command vocabulary allows us to write programs for automated, efficient, and error free communications.

The command vocabulary gives the language to recover from errors. To detect errors and to facilitate programming the site computer adds a counter to the beginning of each line of numerical data and a checksum to the end. Starting with the example line of hourly data from Section 4, adding the counter at the benginning and the checksum at the end will produce the transmitted data line shown below:

```
6 19 3 -243 19 101 -101
counter|   data items   |checksum
```

Interpretation: Six numbers should follow. If you add the five data items together, their algebraic sum is -101.

The checksum is computed by the site computer before the data is transmitted. The receiving computer can add together the data items "as received" and compare this sum with the checksum received from the site. If the two checksums don't agree, the central computer issues a "B" and the site computer transmits the same line of data again. The transmission can be repeated until it checks. This proceedure is not infallible but the chance of a permanent error in the data is very, very small.

Selection Codes for Data Files

Communication can begin following the prompt "@" from the site computer. You can either (a) request the file directory or, (b) immediately request a particular data file. To get the directory type an upper case "C" (Continue). The site computer will send a line of data that may look like this:

```
(counter)                                (checksum)

 5  70000  70001  74276  74275  74274  362826

    "a"    "b"    "c"    "d"    "e"
```

The first and last items are the counter and checksum; ignore these. You will always use the lower case characters to request which file you want. The relationship of the code to the filenames is shown above; "a" for the first file, "b" for the second file, "c" for the third file, etc. The Data Share demonstration system has 16 files so the directory is much larger than the example.

The first file is special, it contains various diagnostic data which will not be discussed here; ignore file "a". The second file, "b", contains only the sensor data from the most recent scan of the sensors. Starting with "c" the rest of the files contain hourly-average data in the format discussed in Section 4.

File "c" always contains todays' data. Assuming the system has been running continuously, the site computer began writing hourly average data into this file at 1AM, mountain standard time. If the current time is 8:30 AM MST, there will be 8 lines of hourly-average data in the file. The last line of data in will be the averages written at 8:00 AM MST.

The oldest day of data in the example is file "e" or "74274". This file contains everything written during September 30, 1984 at Site 7. If the data system was operating normally throughout this day, this file will have the full 24 hours of average sensor data. At midnight tonight, this (oldest) file will be destroyed in order to make room for tomorrows (new) data file.

Getting Started

There is nothing you can do that will damage the site computer or it's program. If you don't understand some of the details and subtleties discussed above you can review this material after you get stuck or confused. If you call 406-587-3779 I will give you the phone number of the Data Share Site and answer any questions.

You will need a 300 baud modem and a terminal or a microcomputer with a "terminal program". The calling modem can be in either "originate" or answer" mode since the site modem will automatically adjust it's mode to complement. The terminal data format must be 300 baud, 7 bit data words, no parity, and one stop bit. If your terminal is set on "half duplex" all the command characters you type will be shown on your screen, this will probably help you track what is happening. A common mistake is sending an "UPPER CASE" character when you intended to send a "lower case" character. If you don't want to see your commands, set the terminal on "full duplex".

If you have an IBM-PC with a serial port you can use the simple BASIC terminal program listed in Appendix I. The proper data format is included in this program.

When your terminal and modem are ready you can dial the Share Data site. The site modem should answer on the first ring and issue a carrier tone. Connect your modem to the telephone line promptly. If the site computer does not hear the carrier tone from the calling computer during the first 15 seconds, it will hang up and you will have to dial again.

If everything is connected and running your terminal will catch the first prompt character, " 1 @ ", sent by the site computer and you are ready to go. Note that the site computer adds a counter in front of the prompt; ignore the counter.

If forgot to plug in your modem or RUN your terminal program you may miss the first prompt. In this case send a "B" (Back up) and it will send the " 1 @ " again. If you don't do anything, the site computer will eventually time-out and abort you, sending you a " 1 A " so you know what has happened. After it takes a scan of the sensors it will send you another prompt.

The first time through, you will probably want to see the file directory. Typing an uppercase "C" (Continue, without the quotes) after the prompt will always produce the file directory. If you look at this for a long time, the site computer will time out, send an abort "1 A", go back and scan the sensors (about 8 seconds), and send you another prompt "1 @" when it is ready to talk again. Don't be concerned because if you know which file you want, you can select it immediately following the prompt.

Type a "c" to select today's file and you will receive the file header which is the same as the file name. The header is transmitted with a counter in front and a checksum at the end so it looks like this:

2 74276 74276

You can make sure that this is the file you want; if not type an "A" (abort) and the site computer will go take a scan and come back with a prompt when it's ready to talk. If you want to continue to look at this file, type an upper case "C" and the site computer will send a line of data which is the first hours' data in the file.

If you want to continue type another "C" and the next hour's data will be sent. You can keep this up until you run out of the time limit (site computer sends you 1 A) or hit the end of the file (site computer sends you 1 D and 1 A). Sample output from a short conversation with the remote data logger is shown in Appendix 2.

Going Farther

Using the information and examples given above you should be able to exercise the data system using your terminal program. At this level you are looking at raw data without any decimal points and no regular format. Counters and checksums and perhaps your terminal's own commands are displayed with the data. The information is all there but it is a little messy and thus difficult to grasp.

Using the commands given above plus about half a page of BASIC programming you can arrange the data in nice columns with decimal points. You might press one key to select the file and let your program do the rest.

Going farther, you can have your program compare the checksums to make sure there were no transmission errors and perhaps save the data in a file on diskette. If your computer has a dialing modem you can write a program to completely automate the data collection and archiving process. This will take about two to three pages of BASIC code and some patience.

Summary

The intent of this paper is to demonstrate modern techniques of remote data collection in the context of energy monitoring. The Share Data system provides an opportunity for hands-on experience with this type of a system and this application area. Comments on this experiment and suggestions from professionals in the field are solicited.

APPENDIX 1 SIMPLE BASIC PROGRAM TO ACCESS DATA SHARE

```
30 '     WRITTEN IN IBM PC BASIC 2.0
40 '
50 '     RUN THE PROGRAM AFTER SETTING UP MODEM AND MAKING THE CALL
60 '     WHEN DONE, PRESS CTRL SCROLL LOCK TO BREAK OUT OF THE PROGRAM
70 CLS
80 '    OPEN COM PORT TO 300 BAUD, NO PARITY, 7 DATA AND 1 STOP BIT
90 OPEN "COM1:300,N,7,1" AS #1
100 '    GET CHARACTER FROM KEYBOARD, IF THERE SEND IT TO THE MODEM
110 A$=INKEY$:IF A$<>"" THEN PRINT #1,A$;:PRINT A$;
120 '   CHECK THE COM PORT FOR RECEIVED CHARACTERS
130 IF EOF(1) THEN 110
140 '   NOT END OF FILE; READ THE CONTENTS OF THE BUFFER AND PRINT IT
150 B$=INPUT$(LOC(1),#1)
160 '   CHECK THE INPUT STRING FOR A LF CHAR, IF FOUND, REMOVE IT
170 LF=INSTR(B$,CHR$(10))
180 IF LF>0 THEN MID$(B$,LF,1)=" "
190 PRINT B$;
200 GOTO 110
```

APPENDIX 2: A SHORT CONVERSATION WITH THE REMOTE DATA SHARE SYSTEM

```
1@
C 18  50000  50001  55277  55276  55275  55274  55273  55272 55271
  55270  55269  55268  55267  55266  552675  55264  55263  929051
c 2  55277  55277
C 14  1 -8  803  1103  891  0  0  678  629  752  627  439  272  6187
C 14  2 -9  797  1103  886  0  0  672  625  749  620  429  256  6129
C 14  3 -4  790  1103  873  0  0  667  619  746  614  420  246  6077
C 14  4 -5  797  1103  866  0  0  662  614  743  608  411  248  6051
c 1 B
C 14  5 -4  796  1103  863  0  0  657  609  740  602  403  239  6013
C 14  6 -4  791  1103  863  0  0  653  605  737  597  397  231  5979
C 1 D
  1 A
  1 @
```

Remote Data Acquisition Systems Using Portable Personal Computers

Charless W. Fowlkes
Fowlkes Engineering
Bozeman, Montana

Abstract

Field monitoring of occupied buildings imposes some unique requirements on the personal computer (PC) based system: (a) the system must radiate less EMI/RFI noise (must meet FCC Class B requirements), (b) the system must run 24 hours/day for extended periods with no maintenance, (c) the hardware should be invisible, or at least compact, because there is seldom anyplace to put it. A PC system that works fine in the laboratory may not be appropriate for field use because of one or more of these factors.

Low cost is one motivation for considering PC based systems. Applications such as energy or illumination monitoring don't require high processing speed so customized application programs can often be written in BASIC by project members who are familiar with PCs; this feature may be an advantage.

Hundreds of peripherals for PCs have come onto the market during the past few years. Based on our experience with this application area, spanning the past 9 years, we offer some general advice and comments on selecting and designing PC based systems for energy monitoring. General issues of cost and operational requirements are discussed in this paper.

Operational experience with a remote, portable PC based data acquisition system costing about $1,500 is discussed. This system has operated in the field on five superinsulated residences for the past 11 months. The data recovery rate for this project has averaged 96%. During the 11 month period, field maintenance was performed on two of the five data acquisition systems due to lightening damage.

Introduction

We began doing low-cost energy monitoring on solar heated buildings in 1977. At this time commercial data acquisition systems incorporating a computer cost between $5K and $25K. (A recent review of monitoring systems is given in [1].) We set out to design our own system in hopes of saving money. We had just started our design effort when the first round of low-cost personal computers became available. We had the first Radio Shack TRS-80 which came to Montana.

It became clear that we could not build a cheaper computer than this one so we set about to design an "add-on" to this machine to make it into a data acquisition system. We designed and built an analog to digital (A/D) interface which incorporated 40 channels for attaching sensors and contained a real-time clock. We added a power supply which incorporated a car battery and charger which would run the system without utility power for about 4 hours.

We built several of these systems at a cost of about $3K each and monitored 15 buildings during the next 4 years. The systems occupied the space of a three drawer file cabinet and weighed about 80 pounds. They were remarkably reliable, often running for months at a time without attention.

We still believe in starting with a mass-produced personal computer and adding something to it to make it do data acquisition and control work. We are not alone in this belief, a recent electronics trade magazine listed 235 add-on products for PC's.

Why the Personal Computer?

Many of us use PC's in the office. There is an understandable motivation to get more of the same machines for the lab since we are already familiar with it. Whatever the explanation or motivation, it is a fact that many have succeeded in making PC's do work. The technical literature abounds with articles about "How I Used a PC for etc. etc.". There may also be other stories about ruined experiments, wasted time, spectacular failures, etc.; but, we don't see these stories written up in magazines.

Using a personal computer (PC) to do real work seems to be a principle that continues to tantalize many of us. New followers "discover" the principle every day. I don't what what all the attractions are but the words "low cost" almost always surface.

What is Low Cost?

To put cost into a proper perspective we should remember that a technical person or a manager working for an organization costs (somebody) $100 to $300 a day or more. Another perspective is offered by dividing the overall cost of a field monitoring project by the days of good data resulting from the project. I did this calculation for a few projects and the range was $32 to $550 per data day. The conclusion from this perspective is that reliability may be more important than equipment cost.

A more severe result of preoccupation with low cost is the "parts trap", it goes like this: "Did you know the ZX8807 chip only costs $4.23? Why with three of these and a couple of ZX044's we could build the whole thing ourselves for thirty seven dollars!". These projects might work out but again they may make the $500 hammer and the $1,100 toilet seat seem like bargains.

While most of us admire the principle of thrift, these issues need to be evaluated in the larger context; spending extra weeks or months of project time to "save" a few hundred dollars on equipment is no bargain. One of Parkinson's Laws reminds us of our tendency to be penny wise and pound foolish. Given the cautions above I still believe there are some real and important benefits to be gained with PC based instrumentation. One benefit can be low cost.

EMI/RFI Noise Ratings and Noise Rejection

Computer (or digital) equipment generates electromagnetic radiation, EMI, which interferes with TV and radio reception. Since 1984, PC's are required to pass FCC tests for residential use before they can be legally sold. A lot of data acquisition equipment is designed primarily for industrial use in a factory and is allowed by the FCC to radiate more noise. [2]

Since energy monitoring instrumentation is often used in residential environment, EMI/RFI noise becomes an issue when selecting equipment. If a personal computer add-on is legal for residential use it will be rated "CLASS B" by the FCC. A legal instrument will always have an FCC identification number on it's enclosure and the statement;

"Certified to comply with the limits for a CLASS B computing device pursuant to Subpart J of part 15 of FCC rules."

A data acquisition system must record tiny signals from sensors to an accuracy of one part in a thousand, or better. Home appliances such as SCR light controls, motors in washers and dryers, heating systems, etc. generate electrical noise and radiate this energy through the air and through the 117 vac wiring in the house creating a hostile environment for the sensitive data system. The system must be capable of rejecting interference from these sources.

A remote energy monitoring system must operate for extended periods of time without recalibration. The data system should exhibit a tolerably small "drift" in its readings with time and temperature changes. Drift and noise are problems that are controlled by specifying proper equipment and then installing the equipment using good instrumentation techniques.

Assembling a PC Based System

The components for a PC based data system for data acquisition and control of building energy experiments are discussed below. Guidelines for typical costs have been included to give a perspective to this important factor. Keep in mind that real-world costs, and features, will vary widely.

A Personal Computer

Personal computers come with a variety of features; prices range from $100 to $5,000. The features we want from the PC are a CPU, some memory, a keyboard, a display, and some input/output (I/O) connections. For typical energy monitoring tasks we can usually find these features in low-end units costing less than $1,000.

A high resolution A/D converter

There are plug-in circuit cards available for the popular PC's which will convert analog voltages into digital numbers (A/D converters) which can be read by the computer. Units providing a 12 bit conversion (1 part in 4000) at a rate of a few conversions per second will be satisfactory. Most of these boards include input switches (multiplexers) so that several individual sensors can be (sequentially) read by the same A/D converter.

For energy monitoring applications integrating A/D converters are are preferred because of their sensitivity and excellent rejection of electrical noise. The cost of these boards will typically range from around $400 to $800 or more.

Other products are designed to connect to standard RS-232 ports, bus connectors, or

special instrumentation ports. The cost of these products ranges from around $400 to $2,000 or more. The more expensive products usually contain extensive signal conditioning and an internal computer.

Some A/D converter accessories are available for PC's for under $200. Some PC's even have a built-in A/D converter for sensing a joystick or mouse attachment. These devices will generally not have the sensitivity or resolution required for energy monitoring applications.

Signal conditioning

The input range of many A/D converters is 0 to 5 or 10 vdc. Sensors often put out only a few millivolts so that some amplification is often required. Other sensors require a voltage or current excitation. More expensive A/D converter systems usually incorporate some signal conditioning capability which may make them cheaper and easier to use in the long run.

Uninterruptable power supply (UPS) and transient protection

For serious or long-term experiments it is advisable to have a battery power supply (UPS) so that the system keeps running through utility outages. The reduced maintenance and data loss are easily worth the initial cost. Units having 1 to 2 hours stand-by capacity are available for PC's at costs ranging from around $400 to $800.

The power supply should protect the system from voltage spikes and low voltage conditions. Lightening strikes and switching transients introduce 50 to 100 voltage spikes each month on the "average" power line.[3] Some spikes will have an amplitude of thousands of volts. A glitch you will lose data and may have to travel to the site to restart it. A PC that performs satisfactorily in the office will not necessarily be equally satisfactory in the field.

Considering the exposure of the data logging computer and the cost of interruptions, protection is madatory. A variety of surge and overvoltage protection devices are available for $50 to $200. Similar precautions should be taken if the system uses a modem which is continuously connected to the telephone line. Protection devices for phone or data lines are available starting at about $60.

Data storage

The system will usually need some device to store data. This can be a magnetic cassette or diskette unit. Solid-state data storage modules or boards are also available for some PC's. These systems, including battery-backed memory and EPROMS, offer improved reliability. Costs of add-on storage modules range from about $100 to $600. (Some PC's may have adequate data storage integral with the system.)

Real time clock

Data logging applications always need a real time clock so that the system knows when to scan sensors, take control actions, store data, etc. Some PC's incorporate this feature. Add-on cards containing clocks are available for popular PC's at a cost of around $200.

Other peripherals

Some experiments will use a modem so that data can be exchanged with other computers. A printer may be needed to generate reports

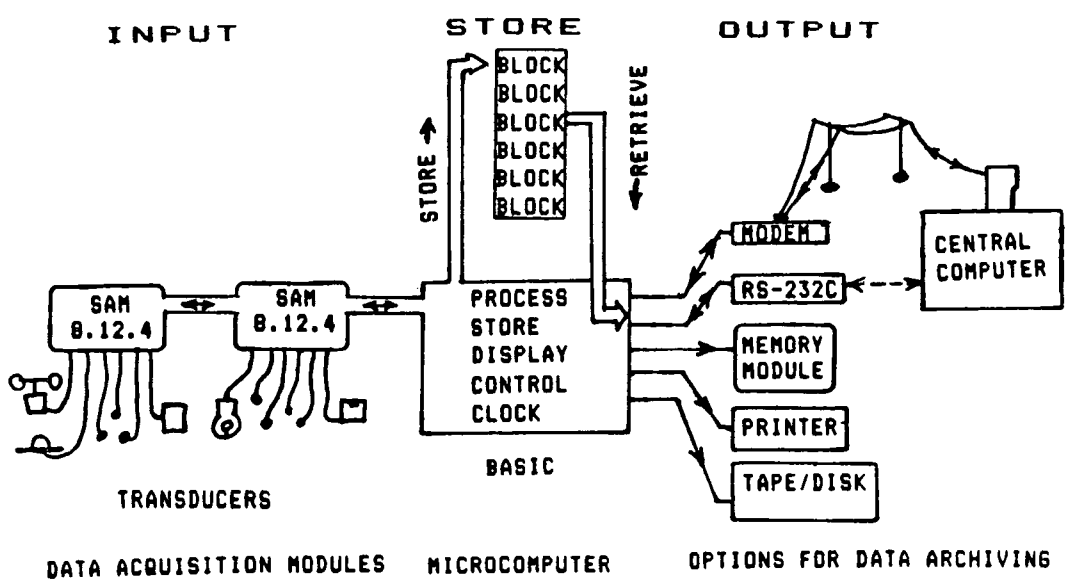

Figure 1. System Components and Data Storage Options

on-site. The PC selected should incorporate these features or have a port connector where these accessories can be easily attached. Add-on modems will cost $100 to $600 and printers will cost around $300 to $600 depending on features and speed.

Many of the peripherals for PC's have been on the market for a year or less and specifications can be bewildering and misleading even when they are honestly presented. When selecting add-ons for a PC look for products with some proven field experience; preferably related to orin your application area. Figure 1 illustrates a PC based system. A variety of data storage options are indicated on this diagram.

Desk-tops and "Lap Sized" Portables

During the last three years we have seen the introduction of "lap sized" computers having many of the features of desk-top computers. These units are typically the size of a notebook and will run off of internal batteries for several hours or days. They usually contain an internal clock and will retain data in memory even when external power is turned off. These special features make the portable computers very appropriate and cost/effective for the data logging applications we are addressing.

If we compare desk top PC's and portables based on their cost effectiveness as general purpose microcomputers, the desk tops win because of better displays, disk drives, and more memory. However, by the time we add an UPS, a clock, and battery powered memory to the desk top computer,it's cost may be more than the portable.

Finding a place to put the data acquisition system for long-term field monitoring can be a problem. In occupied residences, children, pets, dust, and liquids are hazards. A chicken actually layed an egg on top of a video monitor at a site being monitored in 1978. At another site there was a cat that would jump on the keyboard and manage to stop the program. The computer was in a very small closet at another site. It would get buried in shoes and clothes after a couple of months.

For energy monitoring applications the small size and compactness of the portable is a definite advantage. Due to it's low power dissipation and small size it can be put is a small enclosure without cooling fans or tucked into a closet or bookshelf. Short-term measurements such as illumination studies or "energy snapshot" monitoring become feasible when the entire data acquisition system can be carried in a briefcase, Figure 2.

Figure 2. Portable Monitoring System

The Montana Superinsulation Monitoring Project

Portable PC's are currently being used as a part of a remote data acquisition system to monitor five superinsulated residences in Montana. This program is supported be the Montana Department of Natural Resources and Conservation. The National Center for Appropriate Technology is the prime contractor and Fowlkes Engineering was responsible for designing and installing the instrumentation systems.

The instrumentation schematic for these buildings is shown in Figure 3. These sensors include five pulse initiating kWh meters, a solar radiation sensor, two status sensors, a DHW flow meter, and 8 temperature sensors. A total of 17 sensor channels are monitored each few seconds.

Hardware and Software

The instrumentation hardware is shown in Figure 4. A NEC 8201A portable personal computer with 32K of memory is connected to two SAM 8.12.4 Portable Data Acquisition Modules manufactured by Fowlkes Engineering. An extra, external battery capable of running the entire system for 50 hours was used. A BASIC program occupying about 6K of memory controls the system. The entire system is enclosed in a box about the size of a briefcase which is attached to the wall in the basement. The current cost of the components in the box is around $1,500.

The system averages the data at the end of each hour and stores these averages in it's (battery maintained) memory as an ASCII file.

The memory capacity installed in these units has space for 14 complete days of hourly average data.

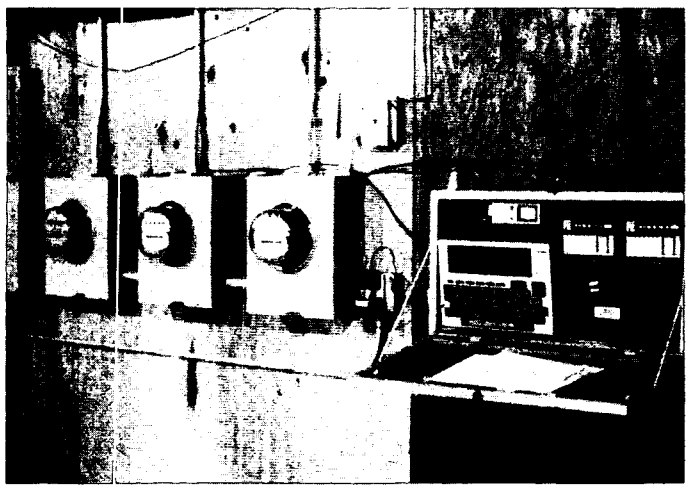

Figure 4. Remote Data Acquisition system on site.

The data acquisition computer is connected to an auto-answer modem which shares the existing residential phone service. The system "needs" the phone line less than 15 minutes each week. Sharing the phone line saves the significant expense of a dedicated line. The computer program controls when the modem can answer the phone and for this experiment lets the modem answer the phone only during a specific 20 minute period each day.

The data analysis sub-contractor for this project is Ecotope, located in Seattle, WA. Data is collected once each week using an IBM-PC and Hayes autodial modem. The data retrieval program includes a file of phone numbers and call-up times so the process is automated. The computer archives this data on floppy disk. The data transfer for one site-week takes about 12 minutes of phone time. Since the site computer buffers 14 days of data Ecotope can slip their schedule for up to seven days before data is lost.

Programs for transferring the data use checksums to detect transmission errors. If an error is detected, the data packet is re-transmitted until it is correct. This scheme reduces data errors to an insignificant level. Within Montana we have found that on the average one line of data must be re-transmitted (due to an error) out of each 30 pages of data. This is better than expected and is a trivial overhead burden on phone connect time.

Sensors and Wiring

Semiconductor temperature sensors, Analog Device's AD-590, are used on this project. These sensors were individually calibrated before installation to an average precision of +/- 0.2 degF.

Solar sensors were Li-Cor 200S photovoltaic units. Fan status sensors were solid-state, optically isolated devices manufactured by Fowlkes Engineering. Electric power was measured by Duncan type MS meters having PG6-MP1/15 pulse adapters. The resolution was one pulse each 0.108 kWh. Flow of DHW was measured with a Rockwell meter having a pulse register producing one pulse/gallon.

Sensor extensions were roughed in by local site contractors using commonly available thermostat wire. This departs from usual and prudent instrumentation practice of using shielded sensor wires. The excellent noise

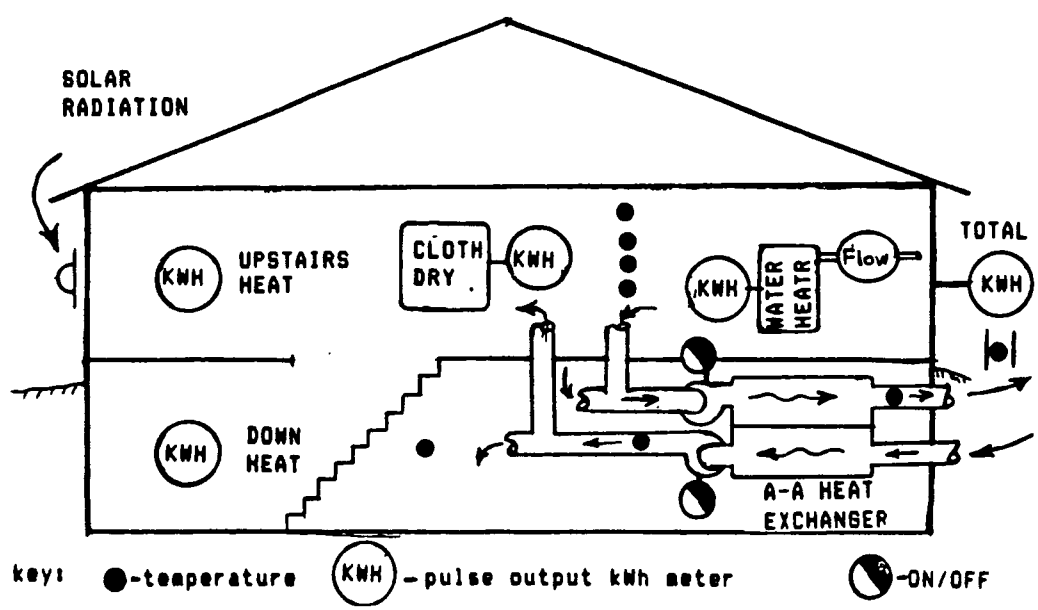

Figure 3. Instrumentation schematic for superinsulated sites

rejection of the data acquisition unit reduced the risk of this decision. I can not generally recommend this short-cut but it saved hundreds of dollars in wire cost and inconvenience in this project. The sensors were installed and the first systems started and put on-line in December 1984.

Cross-Comparisons of Environmental Data

Table 1 shows some comparisons of average ambient temperature and solar radiation for three sites located in the Great Falls,MT.

TABLE 1. AVERAGE DATA COMPARISON

January	Site 1	Site 2	Site 3
Temp, F	21.52	20.20	21.42
Solar,Btu	1126	1203	1161
February			
Temp, F	23.37	21.90	23.55
Solar,Btu	1179	1268	1266

Sites 1 and 3 are located at the same elevation, near the Missouri river, and are about 2 miles apart; we expect the ambient temperature at these two sites to be similar. The average ambient temperatures reported by the data acquisition systems for both months agree to within 0.2 deg F. This is within the calibration precision discussed in Section 9. Site 3 is located on a bench several hundred feet higher in elevation. The data system shows monthly average temperatures about 1 deg F lower which is plausible.

The solar radiation measured at Site 1 is lower for both months. Site 1 faces about 30 deg east of true south while Sites 2 and 3 face nearly south. The orientation would explain this difference.

The solar radiation data at Sites 2 and 3 agree exactly in February while Site 3 is 3% lower in January. Since Site 3 is down by the river, it is shaded by the surrounding hills during early morning and late afternoon; an effect that would be proportionaly greater near the winter solstice. Site 2, being on the top of the bench has insignificant shading and is less likely to have local fog.

The comparison of environmental data at the three Great Falls sites is in close agreement. Small differences can be reasonably explained by expected microclimate effects and known shading differences. These comparisons give us confidence in the integrity of the data base.

Instrumentation Problems

Problems are the most interesting part of a project; provided you don't have too many of them and provided you can solve them. We have a radio-frequency interference problem at one site in Great Falls. This site is lined up with the runway (radar) of Great Falls International Airport, shares a plateau with military radar installations, has two TV transmitter towers within 500m, and has a ham radio station across the street!

The peak ac noise is about 1,000,000 microvolts rms in each sensor wire. (The data system is resolving signals as small as 50 uv thus the noise is 20,000 times larger!) Fortunately the data system rejects most of the noise and the data has been satisfactory. It is clear, in hindsight, that shielded sensor wires should have been used at this site.

During July the modem at Site 2 failed and had to be returned to the factory for repairs. Some electronic components and sensors were damaged at both Sites 2 and 4 during July. These failures occurred during thunderstorms and we assume that a voltage spike(s) came into the system through the phone lines and modem. The modems were not protected with surge supressors; they should have been protected.

The data analysis contractor, Ecotope, Inc. in Seattle, publishes daily and monthly summaries of the data retreived from the five Montana Superinsulation Monitoring Sites.[4] These reports were reviewed for the time period between January and August 1985 in order to

TABLE 2: LOST DATA DAYS AT EACH SITE [4]

Month	Total Days	SITE # 1	2	3	4	5
Jan	31	0	0	0	0	-
Feb	28	0	0	0	0	-
Mar	31	0	0	0	0	0
Apr	30	0	0	0	0	0
May	31	0	0	0	0	0
Jun	30	0	0	0	0	0
Jul	31	0	24	8	0	0
Aug	31	0	13	0	0	0
TOTAL	243	0	37	8	0	0
% DATA RECOVERY		100	85	100	96	100

summarize the data recovery statistics of this project. These results are summarized in Table 2.

The average data recovery for the project has been 96%. This statistic represents the reliability of the personal computers, data acquisition module, and modem. Within the delivered data there were several flaws due primarily to erratic pulse- initiating kWh meters.

Data recovery from field monitoring experiments is not well documented in the literature. The operation of unattended, remote data acquisition systems presents lots of opportunities for failures. It appears that data recovery rates often fall into the 60 to 80% range. Data recovery rates above 90% are probably pretty good for field monitoring experiments. It seems difficult to achieve 95% data recovery even in a supervised, laboratory or research test for extended periods of time. A technical review paper on this topic would be useful.

Conclusions

(1) Personal computers, when interfaced to appropriate add-on products can be cost-effective for data logging in energy monitoring experiments. Continuous, unattended operation places unique requirements on the personal computer. Portable PC's have features that make them especially attractive for data logging.

(2) The general category of "PC based data acquisition systems" includes hundred's of combinations of hardware that is currently available. The user must plan his particular experiment and define his requirements in some detail to truly achieve low system cost.

(3) For residential energy monitoring, be sure to select equipment that is certified as "Class B" by the FCC.

(4) The superinsulated building monitoring project in Montana has produced a sizable base of very good quality data at reasonable cost. This project uses portable PC's with a data acquisition add-on which combine into a simple, cost-effective system.

(5) During the first nine months of the Montana monitoring project the data acquisition systems have run continuously, with no known faults, for 96% of the time. This performance could probably have been improved if more protection had been used between the system and the phone and power lines.

(6) The primary source of problems and lost data in the Montana monitoring project have been lightning (apparently) entering the system through unprotected modems and faulty kWh meters.

Acknowledgements

Montana Department of Natural Resources and Conservation and The National Center for Appropriate Technology are gratefully acknowledged for their support for instrumenting the superinsulated building monitoring project. Preparation of this paper was supported entirely by an in-house grant from the Fowlkes Engineering Philanthropic Fund.

References

[1] Logee,T.L.,et al; "A Survey of Remote Data Monitoring Systems", Vitro Corp[oration, The National Solar Data Network,SOLAR/0013-84/30, 1984.

[2] Keeler, R.; "EMI:Prevent Now or Pay Later", Electronic Packaging & Prod., Feb. 1985, pp110

[3] Allen, G.and Alan Segall; "Monitoring of Computer Installations for Power Line Disturbances", IBM Systems Development Division, 1974.

[4] Palmiter, L.; "Montana Superinsulation Project, Monthly and Daily Summaries", January to August, Ecotope, Inc., Seattle, WA, 1985.

Principles of Data Processing and Analysis

Thomas E. Brisbane
Solar Energy Applications Laboratory
Colorado State University
Fort Collins, Colorado

The Data Logger

In a recent conversation regarding some special data acquisition needs, the process of data acquisition was compared with taking a "snapshot" of the physical system. The analogy being that a slice of time is essentially isolated in the "picture" for detailed analysis and breakdown. This is a very compelling analogy but on balance can lead to more misunderstanding about most data acquisition systems than to any illumination of same. In the conversation noted it was only after this analogy was dismantled that the discussion of data acquisition specifics could continue on a common ground.

In point of fact data acquisition almost exclusively involves some sequential and measured progression through a series of data channels, measuring and recording each in turn with some small time increment between each measurement. The time increment can vary considerably between various data loggers and may or may not be important to the specific task at hand.

There are three terms or definitions of interest in discussing data scans and timings. These are by no means exclusive definitions and this author has found that they are frequently used interchangeably. It is important in a discussion regarding scan timings that everyone agree on the definitions regardless of what they are. The three terms considered important are: 1) scan rate, 2) scan interval, and 3) throughput rate. It is important to have some understanding of these terms since they define important limits of data acquisition systems and may exclude some systems from use.

Scan Rate

Scan rate, as the term implies, is an indication of how fast a given scan proceeds measurement to measurement within the scan. It is given in channels per second, for example 20 channels/sec. This is usually a basic quoted specification for a data logger and is a reliably duplicated rate. Having so stated, however, it must be noted that the quoted scan rate will only be achieved for certain conditions.

Scan rate is an important consideration when system performance is changing rapidly. If tracking rapid system changes is not of interest and these changes are a small percentage of total system performance, then scan rate is much less important to the data logging function. There are methods to increase scan rate, particularly on older data loggers, which are detailed later.

Scan Interval

Scan interval is an indication of how often scans are initiated. A scan interval of 5 minutes for excample indicates that a complete data scan of all measured channels takes place every 5 minutes. Virtually all data loggers contain the timekeeping necessary to accomplish this. In most cases the scan rate and the scan interval are pretty much independent. Only when very short scan intervals are required does the scan rate become important. A scan interval of 4 seconds cannot be achieved if 100 channels are to be sampled and the data logger is capable of a scan rate of 20 channels/sec. It will require at least 5 seconds to complete the scan and probably a bit more than that. A scan interval of 10 seconds might be more realistic for the above case. If the 4 second scan interval is important because of transient time constants or other reasons, the number of sampled channels would be reduced.

Throughput Rate

Throughput rate generally refers to the maximum rate at which the entire data logging system can accept and transfer data, and is the definition used here. This is a variable even within a given system since it includes decisions about the ultimate destination of the data. If data is simply moved through a computer in "raw" form and placed onto magnetic tape, the throughput rate will be substantially higher than if all data is to be processed into

engineering units, sent to several storage media, printed and plotted all on line. The throughput rate is frequently the limiting factor in accomplishing fast scan intervals and high scan rates.

Scan rates are sometimes affected by throughput because the scan rate is usually a function of the slowest device within the data logger. At slow transfer (BAUD) rates the communication port can become the limiting device for high scan rates. Usually this is the only device that does affect scan rate and is also a part of the throughput rate.

In deciding how best to balance all the requirements of data logging it may seem that if long scan intervals are involved, for example 5 minutes, scan rates and throughput are minor considerations. Despite long scan intervals and the implication of plenty of time to process the data it is always best to strive for a high scan rate. The higher the scan rate the less chance that small changes in the system operation will take place from the beginning to the end of the data scan. Referring back to the original picture analogy, the higher the scan rate the better the analogy. For applications involving transient behavior analysis the scan rate and the interval should receive special attention. The goal would be to maximize the scan rate and minimize the scan interval.

To maximize scan rate there are several measures to be taken:

1. Assure that all devices communicating with the data logger are set to maximum transfer rate. On the RS-232 interface this is referred to as BAUD rate and the higher the BAUD rate the less likely it is that the RS-232 communication will slow the scan rate. On the IEEE-488 bus this is not a consideration or a problem.

2. All internal devices within the data logger not required for the present application should be defeated. A printer on the data logger, if on, substantially slows the scan rate.

3. On many older data loggers there is a slight delay to change function and sometimes even to change voltage range. In sampling 50 thermocouple temperature sensors and 50 voltages, for example, the fastest scan rate might be achieved with the 50 thermocouples on sequential channels and the voltages further arranged sequentially by range. It may be that other considerations dictate intermixing some voltages and thermocouple measurements and the total effect on scan rate, if any, must simply be determined.

The scan interval and throughput rate are closely interrelated when attempting to achieve small scan intervals. If the computer being used to process the data has a slow throughput rate it may not be ready to accept a scan even though the data logger is capable of sending at a faster scan interval. The scan interval and throughput rates obtainable on a given system are variables and must be determined for each instance. Fortunately scan interval and throughput are only important for fast transient studies. For steady state or long term performance monitoring the scan interval and throughput rate on typical data acquisition systems are rarely of concern. More recently, data loggers on the market offer the ability to define sub-scans or to pre-define a number of separate scan groups. These separate scan groups can be made up of any of the available data channels and can be programmed with scan intervals different from the overall scan interval. This feature allows a great deal of additional flexibility in determining scan intervals.

The separate scan groups can be triggered to occur only at certain times or only when a particular condition is present. For example, when a solar collector first turns on, a scan group made up only of channels assigned to the collector can be scanned with a very short scan interval until steady temperatures are obtained. By limiting the separate scan groups to only the measurements of interest a much shorter scan interval for these measurements is possible. This ability enhances a data loggers capability greatly and any number of uses can be found for the separate scan groups. Some are detailed later as they relate to topics under discussion.

One of the first uses to occur is to break all scans into separate scan groups and to routinely scan only a small number of channels when no system operation is taking place. As various components of the system operate, only the appropriate scan groups respond. However, careful consideration should be given to this approach. Data may seem of little value for certain functions and its importance may only come to light later. The question of whether a device is contributing thermal siphoning losses can only be answered by examining temperatures when the device is off.

A routine data scan of all channels should continue even with the capability to define sub-scans or alternate scan groups.

Processing the Data

Processing the data can actually refer to treatment either at the input or the output of the data logger. There is some treatment of signals that may be appropriate on the input side of the data logger.

Input Signal Treatment

The signals from certain types of measurement devices are unsteady regardless of the operating condition of the system being monitored. Figure 1 shows the time trace of a system operating in steady state. Plotted are

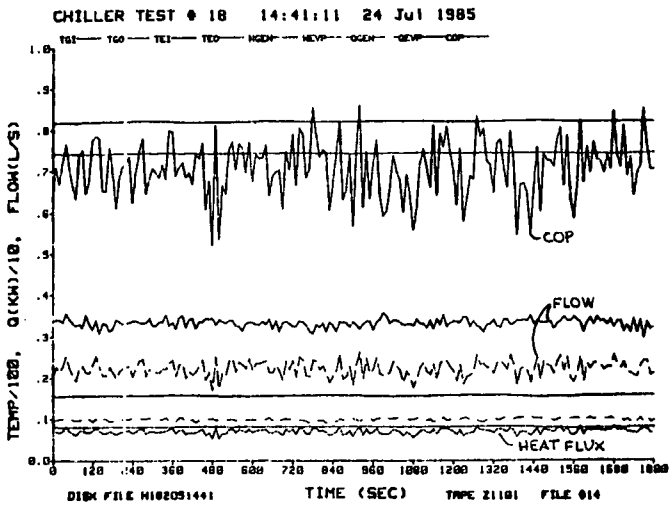

Figure 1. Performance characteristics of a chiller, flow values not integrated.

several temperatures, flow rates and thermal COP for the device under test. As can be seen, the temperatures are very steady with time. The flow, however, is constantly varying about some mean value. The result of using a point measurement of the flow and subsequently calculating heat flux and thermal COP is to strongly drive those calculations resulting in COP that hardly appears to be steady state. The COP, as does the flow, varies about some mean value which is a true indicator of COP.

If the scan interval is large, the error introduced by a point sample of a time varying signal becomes large. From scan to scan a measurement may be consistently under or over the mean value and strongly influence the calculated steady state performance for those scan intervals.

Operating conditions and measurements for the system are the same for Figure 2 as for

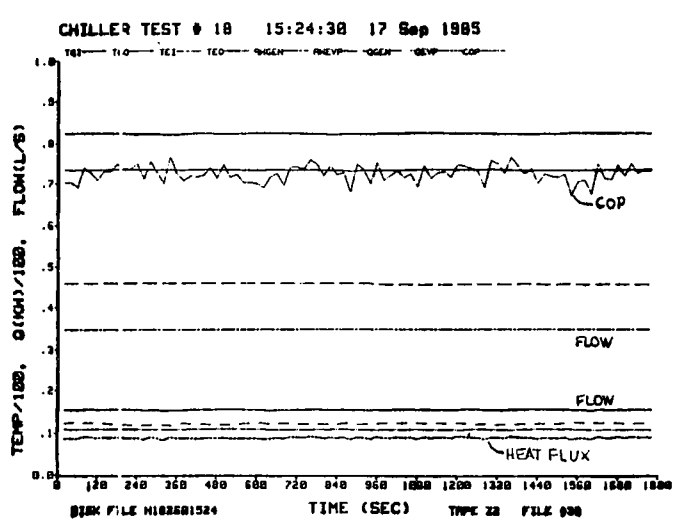

Figure 2. Performance characteristics of a chiller, flow values integrated.

Figure 1 except that the flow values are being integrated during the scan interval. The recorded flow and resulting values of heat flux and thermal COP are now much steadier and consistent from scan to scan. The average flow is the same and the resulting average COP are similar but from scan to scan the variation in these values is considerably reduced. The accuracy of the measurement has not changed but there is less error from scan to scan.

Even in steady state operation systems slowly change through a range of operating points. A particular operating point may exist for a fairly small number of scan intervals, too few to obtain satisfactory mean values.

Solar radiation is an example of another measured value for which point measurements over long scan intervals may be very different than the radiation that was present during a substantial portion of the interval. It is not difficult to imagine an entire range of possibilities that would completely miscalculate the performance of a solar collector for the scan interval based on point measurements of solar radiation. This is true even though the system is essentially in steady state operation.

Measured quantities that often require some input treatment include: flow measurement, power measurement, solar radiation, gas consumption, and time ramp functions.

Typically these measurements are applied to devices known as voltage integrators or pulse accumulators or perhaps time converters. By whatever name, their basic function is to accumulate or integrate the value being measured over the scan interval and then reset to zero to begin the process again for the next scan. For a given steady input (or time varying about a mean value) the output of these devices starts at zero and ends at some maximum value at the next scan. The ending value is proportional to the time varying voltage which was applied to the input during the interval. Figure 3 is a

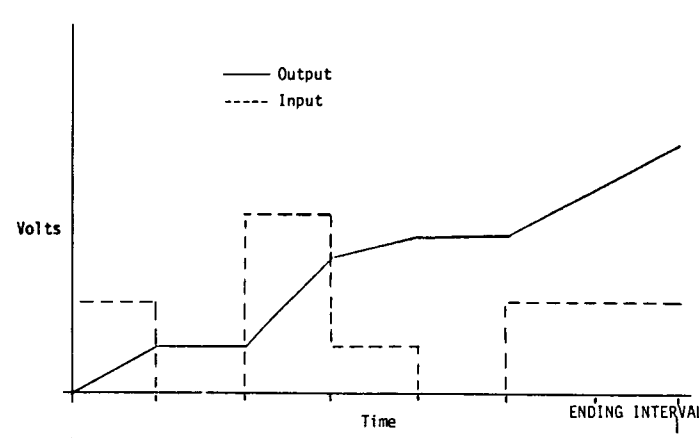

Figure 3. Plot of the typical input/output characteristics of a voltage integrator.

plot representing the input and output characteristics of a typical voltage integrator.

As mentioned earlier, data loggers available today have the capability of defining a number of scan groups or sub-scans within the overall data scan. For these systems separate scan groups made up of the measurements requiring integration are scanned at very short scan intervals. The computer can then be used to accumulate or integrate these measurements during the overall scan interval. Two notes of caution however:

1. If the sub-scan interval cannot be made very short compared to the overall scan interval, better accuracy might be obtained from input conditioning.

2. If the processing of the data requires a large part of the overall interval, appropriate measures must be taken to avoid losing the sub-scans during this time.

Whichever method is used, integrating of time varying signals is an important consideration especially when long scan intervals are involved.

Data Processing

The actual process of entering data into a computer and breaking the strings down into the appropriate values varies from computer to computer and data logger to data logger. The language used to program can also alter the methods used. Comments concerning data processing will, therefore, be limited to general statements and reflect more of a philosophy of data processing than any specific applications. Statements in BASIC will be used to illustrate some points.

In general, data is sent to the computer in a string of information with a defined terminator after each channel of information. In addition to the actual data desired, additional information is also frequently sent. This often includes the channel number, a title or label for each data channel, the units and alarm or set point conditions. In addition, a header is sent which can include label and date-time information. The more information that is sent the slower the scan rate. Therefore it is usually possible to suppress most or all of the extraneous information and send only the actual data.

It is important not to delete the date-time header or the channel numbers from the information sent even if it is possible to do so. The date and time and the channel numbers should be considered as data of really as high a priority as the desired measurements. The only other essential item to send is the terminator since this greatly facilitates reconstructing the numbers in the computer. This terminator may be selectable but it is typically a carriage return and line feed.

A decision to send or defeat additional information is an internal one and should be made with the knowledge that scan rate may be affected.

Data Conversion

Data comes from a data logger in two forms:

1. As a number which is already a direct representation of the measurement of interest.

2. As a number which must be converted or processed in various ways before it represents the measurement of interest. This latter process is often referred to as converting to engineering units.

Usually data loggers equipped to measure temperature with either thermocouples or RTD sensors will send the data directly as an absolute temperature. No further processing of this data is necessary. There are some data loggers which require thermocouple conversion in the computer but generally this conversion is transparent to the user.

Most, if not all, of the remaining measurements of interest in monitoring system performance are voltage conversions. These conversions can take many forms ranging from slope intercept equations to higher ordered polynomials that approximate nonlinear curves.

Thermopiles, used to accurately measure the temperature differences throughout a system, will require higher ordered polynomial curve fit equations of the appropriate thermocouple wire characteristics. Psychrometric charts can also be represented by curve fit equations for wet bulb and humidity conversions from dew point.

Most measurements of interest, however, fall into the more simple and straightforward slope intercept category. The slope intercept conversion will be assumed for purposes of examples to follow. Many of the instruments being used to measure physical data would be assumed to have zero intercepts thus further simplifying even this simple conversion. During in place calibrations a zero intercept is rarely encountered and the general form, including intercept, should be retained.

The conversions of voltage to engineering units are direct calculations in the form of the straight line equation:

$$y = mx + b \qquad (1)$$

where y = physical quantity (eng. units)
m = slope (eng. units/volt)

x = measured quantity (volts)
b = intercept value (eng. units)

For data processing purposes, however, it is more convenient to represent this equation as:

$$y = m\ (x-c) \qquad (2)$$

where $c = -\frac{b}{m}$ (volts)

In this form the zero offset of the measurement can be directly subtracted from the measured voltage.

This conversion process proceeds channel by channel through all the data channels requiring conversion. A very simple computer statement that accomplishes this, however, is to be avoided at all costs! In a counter loop of some sort where DATA(I) is the array into which individual measurements have been placed, the statement might take this form:

```
DATA(I) = SLOPE(I)*(DATA(I)-OFFSET(I))   (3)
```

The fault with this statement lies in the replacing of the original raw data with the converted or engineering units data. It should be the intent in all data processing to keep intact all raw data in its original form. Furthermore, this data should be stored on the same media with the processed data. The following statement better expresses the required conversion:

```
ENGUNITS(I) = SLOPE(I)*(DATA(I)-OFFSET(I))  (4)
```

The processed data is now stored in an additional array leaving the DATA array intact in its original form for storage.

The constants or knowns to be used in the conversion process are read in using straightforward "DATA" statements in a section of the program dealing with initialization and global variables. This could take the following form:

```
READ   CHANNUM(J), TYPE(J), SLOPE(J), OFFSET(J)

DATA   88, 3, 4.283, -0.011
```

The inclusion here of a channel number CHANNUM(J) provides both for a computer check during processing and a programmer check during program changes. Is the correct constant being input for the correct channel of data? The need to count over through a long data field to find the correct value to change or verify on a screen is eliminated by grouping the appropriate constants with a distinct channel number. Additionally the J counter and CHANNUM(J) can be checked against each other.

It now becomes apparent why the channel number from the data logger is always sent as part of the data string. An array formed from the data channels as sent by the data logger is created, DATACHN(I).

When the operation indicated by Equation 4 is carried out, checks can first be made to make sure that all channel numbers match up and are as expected.

There have been more than a few instances of data representing days of operation subsequently found to have been processed with the wrong coefficients. All attempts to cross match actual channel numbers with expected channel numbers should be taken to avoid this occurrence. Furthermore once an error is discovered, if the raw data has not been retained, recovery of information can be a grueling, if not impossible, process.

Wherever possible cross checks of data should be made in the computer in order to flag suspect information. These checks should proceed during the normal processing function but not be allowed to interrupt data processing. Rather a distinct error message should be produced.

Some examples of these checks in processing data would be to compare temperature deltas across components as measured by thermopiles and as computed by the difference of the appropriate temperature measurements. If thermopiles are installed around the entire system, then the temperature deltas can be summed around active circuits and should be very nearly zero. The computed energy into a heat exchanger should be very nearly equal to the computed energy out of the heat exchanger to the secondary circuit.

All of these checks are secondary to the fundamental data processing taking place and, again, should not interfere in any way with that data processing. Warnings in the form of messages on the screen or the printer should be output to warn of the problems. A color screen is particularly good for this purpose so long as the use of color messages is not overdone during normal data logging. Flashing or blinking messages are also effective eye-catchers for warning messages.

On a routine basis the values of all coefficients, slopes, intercepts, etc., should be printed out as part of the data. Where daily summaries are produced it is an easy matter to print out all the values entered as DATA statements for conversion. If computer memory permits, strings can even be entered that are also keyed to the index, i.e., CONVERT$(J) which identifies the measurement conversion.

One of the most common errors that occurs routinely is to laboriously enter new calibrations into the program and then fail to save the new program on disk. The next time the

program is loaded the conversion coefficients are all replaced with the old values. By printing these out routinely it is an easy matter to retrace suspect data due to incorrect conversion coefficients. This also serves as a valuable hard record of when changes were made to these values. Whenever long scan intervals are involved a decision must be made as to how to deal with slowly changing values from scan to scan. Only data not integrated over the scan interval need be included in this decision. The most common technique is to simply average the previous scan value and the present scan value to obtain an average value during the interval.

For example, in using a temperature delta to compute a device total heat flux for the scan the delta may have increased slightly since the previous scan. It is not correct to use this higher value as though it was present during the entire scan. It is much more likely that the temperature delta across the device gradually increased through the entire scan. The simple average of the beginning and ending value over the interval provides a satisfactory method of dealing with the slowly varying data.

Since this averaging procedure only works well with slowly varying numbers, it is necessary to process data in some other manner at start up and shut down. Under these conditions the beginning and ending values may vary a great deal and the average of the two can provide a poor estimate of actual performance. This is expecially true if the change to system operation has taken place during the interval. One strategy might be to throw out the start up scan and include the shut down scan using the beginning value of the shut down interval for the scan calculations. This strategy assumes that in general the heat flux values at start up and at shut down will essentially balance out over long term monitoring. Better is the ability provided by the multiple scan group allowed by modern data loggers. As mentioned earlier, scan groups can be defined for only sensors of interest and short duration transients. This data may only be of interest as a means of obtaining performance values during start up and shut down and not for any transient studies. In this case the computer can function simply as an integrator for the start up period retaining values to be used in the overall processing at the normal scan. In this way more accurate accounting of start up and shut down energy balances can be obtained.

This same scan group technique can even be used to monitor slow changes during the scan interval as opposed to the previously mentioned averaging. In a steady state system it is unlikely that significantly better or different results will be obtained from either method.

Conclusion

For old existing equipment of new state-of-the-art data loggers there exists certain basic requirements for conducting satisfactory data processing. Among each system there also exists many special or peculiar needs and these cannot be addressed. But it is hoped that the author has at least touched on some of the essential considerations for data processing and analysis. Data acquisition and analysis can serve as one of the better examples of GIGO. But it need not be so.

Information Processing of Energy Consumption Data

Larry Augustine, William Taylor, and Larry Windingland
Construction Engineering Research Laboratory
U.S. Army Corps of Engineers
Champaign, Illinois

The U.S. Army Construction Engineering Research Laboratory (USA-CERL) at Champaign, Illinois is using data acquisition equipment for remote data collection at Fort Carson, Colorado. Energy consumption data is being analyzed for several sets of identical buildings. Some of the buildings have been retrofitted for energy conservation and are being compared to the remainder which have not been changed. The purpose of the analysis is to quantify the energy saved as a result of the retrofits.

USA-CERL looked to "off-the shelf-software" that had communications, data transfer, analysis, graphing, file management, and reporting capabilities. This paper discusses the capabilities and limitations of using SYMPHONY to process data information. SYMPHONY is an integrated software package that combines five useful programs (spreadsheet, word processing, graphics, database management, and data communications) with a flexible interface that can be modified to process data. This software is being run on an IBM-AT microcomputer.

The most difficult portion of any data acquisition and information process is getting the data into a usable format. SYMPHONY's communication link and data transfer functions are used to process data into a database. Once in the database format, an initial check of data establishes whether the data is within prescribed limits. Calculations are performed to obtain information such as total daily BTU consumption, Heating Degree Days (HDD), and Cooling Degree Days (CDD) from calculated data.

Statistical functions are utilized to obtain averages, variances, maximums, and minimums of collected data. The flexibility of the worksheet environment allows these statistics to be computed for hourly or daily analysis. Informative graphs and reports are generated from the processed data and are used to establish the amount of energy saved.

Each of the five programs in SYMPHONY is referred to as a window. Communications is performed in the COMM window and spreadsheet operations are performed in a SHEET window. Before communication can occur, the data acquisition system and SYMPHONY must be using the same protocol. Baud rate, parity, stop bits, and word length can be set within SYMPHONY. Generally, matching protocols is all that is necessary for communications to occur.

Using SYMPHONY for data transfer can be difficult and presents some limitations in using SYMPHONY for information processing. Most of the limitations are the result of incompatibility between SYMPHONY and the data acquisition equipment.SYMPHONY can

receive information from a remote system in two ways. One method requires that the remote system use XMODEM error checking protocol. Files cannot be transferred directly to disk unless the remote system is employing XMODEM. The second method utilizes the SYMPHONY COMM window command SETTING CAPTURE RANGE command in the COMM window to receive data. With this command, a range of cells is defined in the spreadsheet as the location in which incoming data is to be stored.

DATA CAPTURE saves the incoming data as a series of long labels in the specified range. The labels must be converted back to numeric data so analyses can be performed. There are two ways available to convert strings back to numbers. The first uses SYMPHONY's "@" functions; each label must be converted independently cell by cell. The second method can incorporate large amounts of data directly into a database format. The SHEET window command QUERY PARSE uses database forms, criterion, and ranges to organize original information into records and fields of a database.

A problem arises if the data is not organized on a line by line basis. SYMPHONY is only capable of capturing 256 characters to a line. For example: the remote acquisition system at Fort Carson has the capacity to read 256 channels of data per time period. This data is arranged so the first sixteen channels are located in the first row, the second sixteen in the second row and so on. In order for QUERY PARSE to work, without extensive row manipulation, the entire scan must be in one line. If the line exceeds 256 characters data will be lost. To eliminate this, USA-CERL has written a BASIC program that processes the incoming data by changing the rows of a scan into a single line and deleting unnecessary spaces. Each line is then written to a ASCII file which can be accessed by SYMPHONY.

The SHEET command FILE IMPORT (FI) loads text and or numbers from a standard ASCII file into a worksheet. FI TEXT imports the ASCII file as labels and can be organized into a database using QUERY PARSE. An easier method is to use FI STRUCTURED, which loads numbers and any series of characters enclosed in double quotation marks and ignores everything else. FI STRUCTURED is useful if the data is primarily numeric. Non-numeric information such as titles, units and other crucial information will be lost unless enclosed in double quotations.

Once in the worksheet environment, database functions and criterion ranges can be used for analysis and data limit checks.

A criterion range consists of the database field names and the corresponding values of the selection criteria. Formulas are written which express the upper and lower limits for each of the fields within the database and placed in the criterion range. SYMPHONY steps through each record of a database and selects those records that match the values in the criterion range. The capability exists to use logical operators within the criterion range. REPORTS ranges are used to generate a report on all incoming data that exceeds the prescribed limits. USA-CERL uses these reports to determine if a potential problem exists with the data acquisition equipment or the processed signal.

Data are transferred every three or four days. The reports on data limits are generated for each data transfer. Statistical analyses are done only when an entire month of data has been saved in the master data worksheet.

For Fort Carson data, statistical analyses are based on time of day or day of month. This simplifies the analysis because the database statistical functions can be used in conjunction with the SHEET command RANGE WHAT IF 1-WAY (RW). RANGE WHAT IF is primarily intended for sensitivity analysis, but can also be used for statistical analysis. The database functions utilize a criterion range and perform the required calculation for all records that meet the criteria. Since the criteria is either time or day (single field and one criteria), the RW ENTRY LIST is substituted into the criteria cell and the statistical functions are computed for each value in the entry list. Two WHAT IF passes generate tables of the necessary statistical values of the collected data: one for hourly data and one for daily data.

The WHAT IF tables are removed from the master data worksheet using FILE EXTRACT VALUES and saved in a separate file. The statistical files present the data in a more usable, summarized form. Using FILE COMBINE COPY, statistical files for different buildings can be loaded for a side by side comparison, or tables for every month can be compiled for an annual profile.

Graphs and trend analysis can be generated for any of the statistics that have been loaded into the current worksheet. Graphs are created within the GRAPH window. Up to six ranges can be

defined and line graphs of the ranges vs. time generated. Titles, legends and data labels are added to the defined ranges in the GRAPH SETTING SHEET and saved using the NAME command. Multiple graph settings can be named and saved allowing for several different graphs to be obtained from the same set of statistical data. SYMPHONY is not limited to line graphs vs. time; correlations between different sets of data can be investigated using the XY graph function. For example: BTU used for heating is graphed against heating degree days to determine if a linear relationship exists.

When all the graphs have been generated and the images saved, the compiled statistical files are printed along with the corresponding graphs so hard copies of the analyzed data are available.

SYMPHONY is a large, complex integrated software package well suited for an application of energy data analysis. Multiple ways of accomplishing a task exist; decisions have to be made as to which method is the best for the application. A thorough knowledge of Symphony provides the opportunity to stretch the intended use of several functions for unique applications (like WHAT IF) and the flexibility of the worksheet environment makes learning efforts worthwhile. This flexibility allows the method of analysis to be modified to provide more details if needed. The ability to transfer data, compare that data to established limits, perform statistical analyses, provide graphs and generate reports makes SYMPHONY an effective program for information processing.

Occupant Effects and Normalization of Field Monitoring Results

Donald J. Frey
Architectural Energy Corporation
Westminster, Colorado

Abstract

The performance of buildings and their systems can be described by a variety of factors. Some of these describe energy performance, others describe thermal properties, and still others describe occupant comfort. The task of creating normalized factors so that information can be compared among buildings is difficult. The information in this paper pertains primarily to analyzing performance data of individual residential building and emphasizes the importance of understanding the effects occupants have in controlling this performance.

By influencing thermostat setpoints, internal gains, extra heat loss due to venting and accidental infiltration, and managing solar apertures the occupant controls the amount of energy required for auxiliary heating. Designers, builders, and occupants are often unaware of the extent to which occupants can influence auxiliary energy consumption, building researchers need to have techniques to account for occupancy when performing data analysis.

To illustrate these effects, the actual and predicted performance of two townhouses in Pittsburgh, Pennsylvania are analyzed. Measured differences between design and actual operating conditions more than tripled the auxiliary energy consumption of one of the townhouses compared to predicted values with "average" occupancy. These comparisons were made using techniques to extrapolate long term performance from measured thermal parameters derived from short term test data.

Introduction

Two approaches to building research are to either collect data from a large number of buildings so that variations among individual buildings can be resolved statistically or to collect data from an individual building to understand its performance in detail. The information presented in this paper is intended to provide a method for examining the performance of individual buildings.

Building performance has different meanings for different people. Architects, engineers, owners and occupants all have different notions of building performance based on their areas of expertise and their association with the building. Six possible categories of performance are listed below.

1. Thermal/Energy
2. Lighting
3. Comfort
4. Functional
5. Economic
6. Environmental Impact

One category is by no means exclusive of concepts contained in any other, but they do represent major subject areas in which the performance of buildings can be discussed. This paper examines issues pertaining to evaluating the thermal/energy performance of individual buildings.

An important first step in evaluating building performance is to quantify the effects of occupants. A technique for doing this is discussed. An important subsequent step is to decide whether you are interested in evaluating the performance of buildings within one climate or across several climates. The latter is not always a reasonable thing to do, but is not discussed here. The remainder of the discussion concentrates on analyzing occupant effects.

Occupant Effect

Occupants influence energy consumption by controlling the following:

1. Thermostat setpoints;
2. Internal gains;
3. Excessive venting;
4. Accidental infiltration; and
5. Management of solar and conservation features

Thermostat setpoints are the winter and summer temperatures preferred by the occupants and maintained by mechanical systems. Internal gains are the heat added to the building by lights and appliances. Excessive venting refers to deliberate ventilation of the building such as opening windows at times when ventilation does not contribute to comfort. Accidental infiltration refers to heat lost (or gained) through opening and closing doors. Management of solar and conservation features refers to proper use of shading devices or movable insulation to allow solar heat to enter during the day or to decrease heat loss at night.

Two important question when analyzing data from buildings are, "What is the magnitude of the effect on building energy performance caused by occupants?" and "How can these effects be accounted for in the analysis"? One of the best ways to answer them is through an illustration using data that were collected in two townhouses in Pittsburgh, Pennsylvania.

The Manchester Community Redevelopment Project is a residential infill development in an inner city neighborhood in Pittsburgh. The project consists of three groups of townhouses, with either four or five townhouse units in each group. They are built to high levels of energy efficiency with R-23 walls, R-38 ceilings, low levels of infiltration (typically less than 0.25 air changes per hour), integral sunspace entries and with significant amounts of glazing for direct solar gain.

Two of the townhouses were monitored for long term temperatures and energy consumption by Carnegie-Mellon University (CMU). One of these was an end unit with one common wall and the other was a middle unit with two common walls. Architectural Energy Corporation (AEC) performed a series of one-time measurements under controlled conditions to measure the thermal characteristics of the buildings. These tests were necessary to derive input data for the analysis. The methods used for the one-time measurements are similar to ones used in the Class B program for monitoring passive solar home performance.[1] The initial plan for evaluating these buildings was to use the Class B methodology. Preliminary examination of the data indicated that the occupancy of these townhouses was not typical. Thermostat settings were in the mid to upper 70's and internal gains exceeded 100,000 Btu per day. Sonderegger has reported on the effects that occupants have on heating energy consumption.[2] The Class B approach was judged not to be appropriate because the potential energy performance for the buildings with more normal occupants would be obscured by these influences. A method which could account for these unusual occupancy conditions was required. Such a method was developed and its application is explained below.

Monitoring and Analysis Techniques

Class B Methodology

The Class B analysis technique is based on one-time measurements of building heat loss coefficient and heating system efficiency and continuous measurement of auxiliary energy, internal heat gains, and temperatures to form an energy balance and subtractively calculate passive heating values. It will produce useful results for buildings with normal occupancy, but the value of the information diminishes as occupancy patterns depart from what can normally be expected. The major occupant effects are unreasonable thermostat setting (high or low), excessive internal gains, increased heat loss due to additional infiltration from leaving doors and windows open and mismanagement of passive solar features. Another shortcoming of the Class B analysis technique is that its performance results are influenced by weather. As year to year weather variations and occupancy effects have such a major impact on energy performance of residential buildings, the results of the Class B analysis may not be representative of the potential performance of the same building with average weather and occupants. In fact, a range of information about a particular building and its expected performance with different occupants and weather is a better indicator of the merits of a particular design.

Improved Methodology

An improved monitoring and analysis methodology was developed which builds on experiences from the Class B program. This improved methodology is designed to deliver more information about the energy use potential of a building, and includes the explicit effects of occupancy and weather variability, as well as having the potential to be quicker to implement than the standard Class B approach. It is conceptually described in Reference 3. Important features of this approach are that it uses building thermal parameters based on short-term tests in the building and that occupancy and climatic variability can be input to derive a range of expected performance for a single building. Performance in this case is described by purchased auxiliary energy.

In concept this methodology relies on good quality one-time tests of building heat loss coefficient and heating system delivery efficiency, as well as thermal mass and effective solar aperture area, if required, to predict analytically the energy performance. The results of the one-time tests are used as inputs to a building energy analysis simulation method. This approach is similar to the Class B approach because it still relies on input data from one-time tests, and requires an analytical model to derive a solution. The model can be run with

measured data, as we do in part of this analysis, to derive values directly comparable with the traditional Class B approach, or can be run with other values such as for thermostat setpoint, internal gains and long term average weather. By making a series of computer runs with different parameters, the effects of occupancy and weather on energy performance can be analyzed and evaluated. This method has been applied to the analysis of the Manchester Project data to quantify occupant effects on energy performance.

Manchester Monitoring

Occupant Descriptions

The end unit was occupied by a single man throughout 1984. Internal heat gains during the time he lived in the house were low, since he was gone much of the time and rarely cooked at home. In January 1985, a working couple moved into this unit, and internal heat gains became significantly higher. The middle unit is occupied by two elderly ladies (one over 100 years old). These occupants preferred a very high internal temperature, and showed significant levels of internal heat gains.

One-Time Measurements

The one-time measurements were performed by Architectural Energy Corporation in the first week of February 1985, and consisted of four all-night tests. Two nights were used to measure the building's overall heat loss coefficient, and two were used to measure the heating system delivery efficiency. These tests were each performed twice to ensure that they were repeatable and to add confidence to the measurements. One-time tests were not performed to empirically derive the total effective solar aperture area and effective thermal mass because there are no east or west windows that significantly contribute to solar heat gains, and the thermal mass beyond the inherent mass of the buildings was judged to be minimal.

During the one-time measurements, several observations were made about the operation of the building, it's solar features and appliances. These included the setpoints on the thermostats, the blockage of the solar apertures, the ventilation of the gas-burning appliances, and the insulation on the gas water heater tank and furnace ductwork. Readings were taken on all the gas submeters in the end unit daily, which were used to partition the gas use in the building, to infer from later measurements what portion of the gas used in the house was delivered to the space as auxiliary heating, and what was the portion delivered as internal gains.

Manchester Analysis

Unusual Occupancy

The decision to investigate and apply an improved analysis methodology was based on the unusually high interior temperatures and internal gains in the townhouses. These observations were made after comparing data from the townhouses with other data bases. Fig. 1 compares the interior temperature of the two Manchester Project townhouses with the SERI Class B data base of approximately 70 houses[4,5] and a base of 440 houses in central Iowa.[6] The end unit was kept at 74°F and the middle unit at 79°F. As can be seen, these temperatures are significantly warmer than any of the other houses. Fig. 2 compares the internal gains of the townhouses with the measured internal gains from 21 of the SERI Class B houses. The end unit had a calculated average internal gain amount of 115 kBtu/day (rounded), and the middle unit had 130 kBtu/day (also rounded). These values are significantly above average.

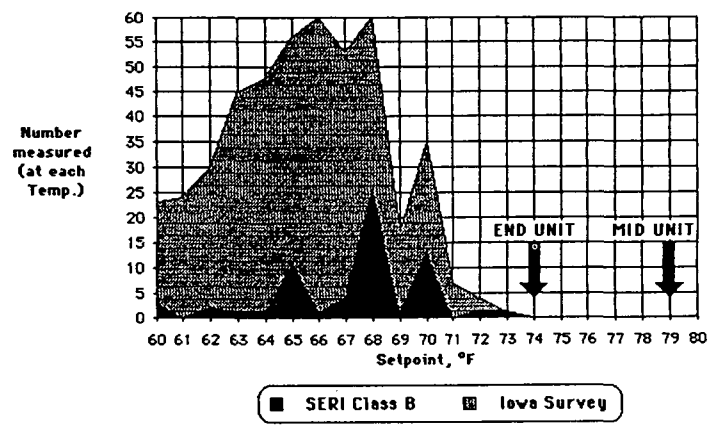

Fig. 1, Monitored Interior Temperatures (°F)

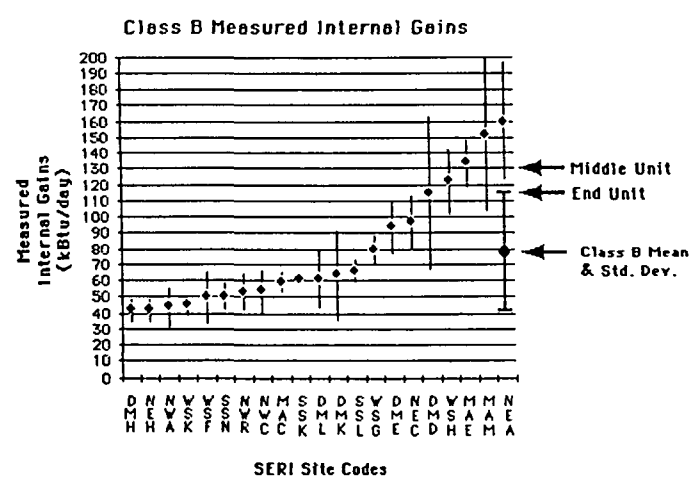

Fig. 2, Class B Measured Internal Gains

Analysis Scenarios

The improved method was applied to the analysis of the data by calculating the energy performance of the buildings under five different operating scenarios. These are:

1. The potential performance of the buildings using Pittsburgh design weather data, a 68 °F thermostat setpoint, and 60 kBtu/day of internal heat gains;

2. The performance using Pittsburgh design weather data, the measured thermostat settings (74 °F in the end unit and 79°F in the middle unit), and 60 kBtu/day of internal heat gains;

3. The performance using Pittsburgh design weather data, a 68 °F thermostat setpoint, and measured internal gains (115 kBtu/day in the end unit and 130 kBtu/day in the middle unit);

4. The performance using Pittsburgh design weather data, measured thermostat settings, and measured internal gains;

5. The performance using Pittsburgh design weather data, measured thermostat settings, and measured internal gains, but with the coefficients for heat loss and aperture area adjusted so that predicted energy use, averaged over the entire year, matched the measured values.

The first scenario describes the potential operation of the building with "normal" occupants. The thermostat setpoint and internal heat gains are averages for the Class B population of passive solar houses. The second scenario shows what impact that increases in set point temperature alone have on energy performance. The third scenario shows what impact that increases in internal gains alone have on energy performance. The fourth scenario shows what impact both increases in setpoint temperature and increases in internal gains have on performance. The fifth scenario is the actual operation of the buildings and includes the effects of increased UA due to venting.

Auxiliary Energy

The theoretical auxiliary heat use was calculated based on the short-term measurements of the heat loss coefficient, and the internal temperatures and internal gains for each scenario. The technique used was the "Solar-to-Load Ratio" method developed by the Los Alamos National Laboratory.[8] The monthly method was used instead of the quicker annual method to account for the varying degree-days because of the balance temperature significantly different from 65°F.

In essence, two equations (Class B Energy Balance and Solar Savings Fraction) were solved simultaneously for two unknowns (actual occupant affected building heat loss coefficient and total solar gains) as shown below:

$$(NLC) \times (DD_{Tbal}) \times (1-SSF) = \text{aux load} \quad [1]$$

$$(TLC) \times (DD_{Tset}) - Q_{solar} - Q_{int} = \text{aux load} \quad [2]$$

Where: NLC = Net Load Coefficient [12]
TLC = Total Load Coefficient

Results

The results of the analysis are presented separately for the end unit and the middle unit to help clarify the presentation.

End Unit

Annual performance summaries for the end unit are plotted in Fig. 3. The potential for the unit is to require 34.2 MMBtu annually for heating. Auxiliary energy delivered to the load in this case is 10.5 MMBtu (14.8 MMBtu purchased, assuming the 71% measured heating system efficiency) and the percentage of the load provided by passive solar is 24%.

By increasing the setpoint temperature, the total load increases, the purchased auxiliary increases, and the utilized internal and solar gains increase. By increasing only the internal gains, the load remains the same, the purchased auxiliary is decreased, and the utilized solar is decreased. By increasing both the setpoint temperature and the internal gains, the load is increased, but the purchased auxiliary is decreased and so is the utilized solar. In the fifth scenario, the actual operation, the purchased auxiliary is greater than the fourth scenario because the passive apertures were blocked with curtains.

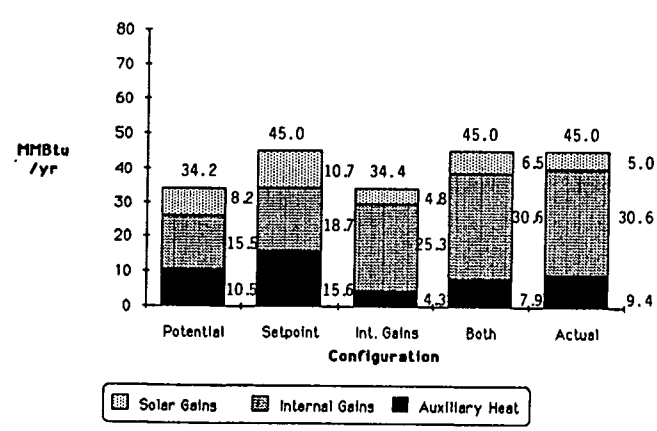

Fig. 3, End Unit Annual Performance

Middle Unit

Annual performance summaries for the middle unit are plotted in Fig. 4. The potential for the middle unit is to require 29.4 MMBtu annually for heating. Auxiliary energy delivered to the load in this case is 7.3 MMBtu (10.3 MMBtu purchased) and the percentage of the load provided by passive solar is 24%. The effects of changing the setpoint and the internal gains are the same as described above for the end unit. In the fifth scenario, the actual operation, the load is substantially increased both because of the high setpoint temperature and because the occupants apparently frequently leave windows open, even during the winter. The auxiliary and internal gains are taken from the data, and are greater than any of the other scenarios. The utilized passive solar, though greater than the building with normal occupants, is 13% of the total load. The information in the fifth scenario is conceptually similar to a Class B analysis, but the results are substantially different. Class B would calculate total load based upon setpoint temperature alone (46.4 MMBtu) and totally ignore the extra infiltration due to venting. In so doing, a portion of the internal gains and all of the solar gain would be thrown out as not contributing to the load. Because the improved methodology includes the simultaneous solution of two equations, the increased load is considered. This is a major improvement in this type of performance evaluation.

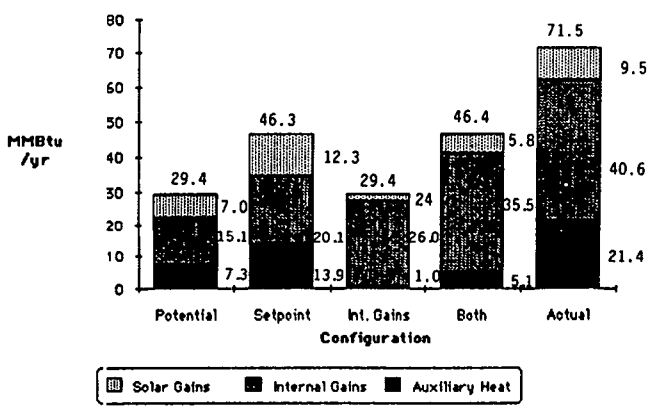

Fig. 4, Middle Unit Annual Performance

Conclusions and Discussion

A number of conclusions have been drawn from monitoring the Manchester Project townhouses. These have to do with the performance of the buildings, the occupancy of the buildings, and the approach that was used to analyze the data. The major conclusions are as follows:

1. The occupancy of the Manchester townhouses is different than what is considered normal because of high thermostat settings in both units and high amounts of internal heat gains. A traditional Class B analysis would not show the potential for these buildings with more normal occupancy.

2. The improved analysis methodology which is based on empirical data from the buildings was extremely useful for examining the actual performance of the buildings as well as for calculating the potential performance of these same buildings with different thermostat settings and internal gain profiles.

3. Increasing the thermostat setting in these two buildings increased the heating load, auxiliary energy required, utilized internal gains, and utilized solar gain.

4. Increasing the internal gain in these two buildings at a fixed thermostat setting had no effect on the heating load, but decreased both auxiliary heating required and utilized solar gain.

5. In the middle unit, with the highest temperatures and internal gains, the sum of auxiliary heat and internal gains varied from 22.4 MMBtu/year for the potential (normal) scenario to 62.0 MMBtu/year for the actual building, a factor of almost 3.

6. The improved methodology includes a calculation of increased building loads due to venting.

7. In this project, one-time measurements of building thermal parameters were made using techniques from the Class B program. Improved procedures, such as the BEVA approach being developed at SERI[9] or techniques reported by Janssen[10], may produce more accurate estimations of these parameters.

8. Other analytical techniques such as BEVA, REM[11] or the unutilizability method may yield more accurate results and should be considered by others using this approach.

Acknowledgments

The author wishes to express appreciation to Vivian Loftness and Volker Hartkopf at Carnegie-Mellon University for having asked us to be involved in monitoring the Manchester Project and to Ralph Jones and Walter Loss at Brookhaven National Laboratory who understood the unusual occupancy in these buildings and allowed us to use the improved performance evaluation method.

References

1. Frey, D., McKinstry, M. and Swisher, J., "Installation Manual for the SERI Class B Passive Solar Data Acquisition System," SERI/TR-254-1671, Solar Energy Research Institute, Golden, Colorado, 1982.

2. Sonderegger, R., "Movers and Stayers: The Resident's Contribution to Variation Across Houses in Energy Consumption for Space Heating," Energy and Buildings, Vol. 1, No. 3, April 1978.

3. Bishop, R. and Frey, D., "Quick Methods for Accurately Predicting Building Thermal Performance from Short-Term Measurements," page 274, Proceedings of the Ninth National Passive Solar Conference, Columbus, OH, ASES, 1985.

4. Swisher, J., and Cowing, T., "Passive Solar Performance: Summary of 1981-1982 Class B Results," SERI/SP-281-1847, Golden, CO, Solar Energy Research Institute, June 1983.

5. "Passive Solar Performance: Summary of 1982-1983 Class B Results," SERI/SP-271-2362, Golden, CO, Solar Energy Research Institute, December 1984.

6. Baker, L., Hodges, L., and Thompson, R., "Random Surveys of Existing and New Homes in Central Iowa," Page 268, Proceedings of the Ninth National Passive Solar Conference, Columbus, OH, ASES, 1985.

7. Palmiter, L. and Kennedy, M., "Annual Thermal Utility of Internal Gains," Page 51, Proceedings of the Eighth National Passive Solar Conference, Santa Fe, NM, ASES, 1983.

8. Jones, R. (editor), Passive Solar Design Handbook, Volume Three: Passive Solar Design Analysis, Los Alamos National Laboratory, Los Alamos, NM, July 1982.

9. Subbarao, K. and Anderson, J., "A Frequency-Domain Approach to Passive Building Energy Analysis", SERI/TR-254-1544, Solar Energy Research Institute, Golden, CO, 1982.

10. Janssen, J., "Application of Building Thermal - Resistance Measurement Techniques", ASHRAE Transactions 1982, V.88, Pt.1.

11. Derickson, R.G., Holtz, M.J., "Development of Simplified Design Tools Using a New Approach to Building Energy Simulations, Presented at Building Energy Analysis Simulation Conference, Seattle, Washington, August 20-21, 1985.

12. "Passive Solar Heating Analysis, A Design Manual", Balcomb, J.D., et. el., American Society of Heating, Refrigerating and Air-Conditioning Engineers.

Real-Time Sensor and System Fault Detection Using Analytical and Statistical Techniques

Thomas A. King, William J. Shadis, and Michael T. Panich
Mueller Associates, Inc.
Baltimore, Maryland

I. Introduction

Data acquisition systems for building energy performance monitoring have become more complex, yet less expensive as powerful, inexpensive microcomputers have become available. This hardware has enabled designers of monitoring programs to greatly extend the range of data collection and analysis while keeping costs reasonable. Thus we are witnessing a shift, from a hardware-oriented approach to data collection and analysis to a software-oriented approach which emphasizes the flexibility that the new equipment provides.

In line with these developments, Mueller Associates decided to investigate methods used within the aerospace industry to improve the reliability and accuracy of monitoring systems, focusing on approaches to identifying sensor errors.[1,2] The critical nature of the monitoring tasks on space vehicles and aircraft has hastened their designers to develop methods for detecting sensor errors. We felt that the availability of lower cost microcomputers might now make these aerospace approaches more generally applicable to building systems monitoring.

We focused on sensor errors because sensors provide a critical function in most monitoring programs. Many sensors are low cost, but their failure, if undetected for a significant time period, can greatly increase monitoring program cost. Thus sensors have an impact out of proportion to their cost.

Once installed, building monitoring systems, like most other electrical/mechanical equipment, tend to be taken for granted until malfunctions cause effectiveness to be seriously impaired. By then, much valuable data may have been damaged and may be unrecoverable. To achieve proper operation of monitoring systems, sensors must be regularly checked and recalibrated when necessary. We hoped in this brief investigation to identify possible software options that might reduce the concern over sensor errors.

In this paper, we identify several procedures from the aerospace industry which do appear to have potential application to building and equipment energy use monitoring programs. Analytical techniques developed by NASA and others have led to the reliance on high speed on-board computers to read all sensors and to determine by mathematical techniques whether sensor or system failures have occurred or are likely to occur in the near future. Building system monitors do not have to react as quickly as their aerospace counterparts, but sensor failures are still important.

In critical aerospace control functions, sensors may be constantly monitored and compared to complex model projections. If the sensor output signals do not comply within reasonable limits, the model values are used to maintain a reduced but adequate level of control. While building applications do not require such frequent attention, time is a critical parameter in a monitoring program and bad data can be costly. For instance, for a corporation that wants to bring a product to market and has only one year of pre-testing planned, lost data in the testing program may delay the program for a year or more, especially when seasonal testing is required. Also, in a testing program that has multiple regional sites without qualified technicians at each site, sending technicians too frequently can increase program costs unacceptably. Software fault detection may reduce the need for such trips.

We begin by describing several procedures that are currently used by NASA and others, and then explore their applicability to building systems. A low cost data acquisition system (DAS) that Mueller Associates, Inc. has designed for a

field test of heat pumps is also described. Simple ways by which the identified procedures could be applied to this system are described, along with possible advantages.

II. Sensor Failure Detection Techniques

Current Methods

Discussions with NASA personnel and others indicate that current methods used to maximize the reliability of monitoring system sensors center on three approaches:

- redundant sensors,
- hard failure detection logic, and
- mixed sensor lots.

The redundant hardware approach requires the use of multiple sensors to measure each critical parameter. In the simplest case, readings from multiple sensors are averaged to obtain an estimate of the actual parameter value. Averaging reduces the total reading error. For example, if the readings from three temperature sensors are averaged, the result will usually be more accurate than any individual reading if the sensor errors are mostly random. This approach suffers from a weakness in that it does not account from gross sensor failures. The readings from a sensor that has totally failed will still be averaged with those that are nearly correct, still causing significant errors. Total sensor failures are termed "hard" failures. Sensor drift, which is much more difficult to identify is termed a "soft" failure.

One way to eliminate the problem of gross sensor failure is to read the sensors with a system that can act on the "voting" principle. In this case, three or more redundant sensors are needed for each critical measurement. The readings are checked to determine which are closest together. If two of three sensors read 70 and 72 degrees and the third reads -450 degrees for example, the odd reading is rejected and the remaining values are averaged.

Another approach currently used is to provide reasonable limits for sensor readings. If the sensor output values are not within the permissible range, it is deemed to have failed and its values are not accepted. For example, an outside temperature sensor that is providing a signal indicating a temperature of 150 degrees is unlikely to be operating properly. Such ranges must be selected carefully to minimize the possibility of rejecting unusual but real data.

Finally, a purely hardware approach which can be used with any of the above options is to assure that the redundant sensors in use are from different production lots from the same manufacturer or even from different manufacturers. This reduces the likelihood of defects common to a production lot from skewing the entire data set.

New Approaches

Over the last decade, substantial research has been conducted by NASA, the military, and private corporations in efforts to improve the reliability and accuracy of controls for high speed jet engines through the use of digital monitoring and control of engine operating conditions. One result of this work has been the development of high speed special purpose on-board digital computer hardware and software that can monitor engine performance on a real time basis and quickly correct engine operating flaws before they cause serious problems. Another function of such systems is to monitor the operation of the various sensors to determine if they are operating properly.

At first thought, this might seem an impossible task, since the monitoring system must depend completely on its array of sensors to interact with the engine it is monitoring. If all of the sensors fail to provide accurate information, the monitoring system is helpless. However, if only one of a number of sensors fails, the monitoring system may be able to detect the failure if it has another independent way to compare all the sensor readings. In essence, software can, to some degree replace and supplement hardware.

There are two analytical methods by which this may be accomplished. These are termed "analytical redundancy" and "statistical redundancy." Both methods require the use of substantial mathematical manipulations of the sensor data. Both of these utilize what are here termed "smart filters." A smart filter is a checking program placed in series with the data logging system that inspects incoming data on a real time basis and provides an error signal if appropriate. The error signal can be used to provide a system alarm that a problem has occurred. It can also activate a subprogram that is a model of all or part of the system. The model can be used to estimate system performance and to make judgments as to whether the system being monitored, the sensors, or both are operating correctly.

Analytical Redundancy. If the system being monitored is well understood in a mathematical sense, it is likely that a

mathematical model of the system can be constructed. This model can be incorporated into a high speed digital computer program. The model is designed to simulate reality but is also independent. It is possible to use portions of the model in lieu of reality (as described by the various sensors) to check if the sensors are providing "reasonable" values. In essence, this approach uses the "totality" of the sensor readings to determine if reality is being accurately represented by the sensors.

A simple example of this approach is a monitoring system that measures the amount of heating energy used by a building and also measures the ambient temperature. If the building has been properly modeled, it is quite possible to estimate the building load given the ambient temperature and other data. Therefore, a fault-detection program that has access to both the sensor readings and the load model can determine the likelihood that a sensor problem has occurred based on comparisons of the sensor readings with the model results. In this simple case, it would not be possible to determine which of the sensors was in error, only that an error existed. In real monitoring systems involving many sensors, it is often possible to construct a series of logic and mathematical checks that can ultimately identify one or more unique sensors as the probable source of the errors.

Statistical Redundancy. In many instances an adequate model of the operating system may not be available for comparisons. It is still possible to check sensor accuracy through the development of a statistical model. In this case, a program is used to automatically determine and save average sensor readings and derived parametric values for future reference. For instance, a program can be used to periodically calculate the Coefficient of Performance (COP) of a heat pump system. Similarly, a program could calculate a building load line using regression analysis techniques. Then, subsequent readings can be checked to determine if they are reasonable when compared with the baseline statistical data.

This approach requires a "system calibration period" during which performance data are collected to form the reference database. Once such data are collected, various logic checks can then be made to determine if the readings being obtained are "reasonable" based on the historic record.

It is apparent that neither analytical nor statistical redundancy can guarantee the the detection of faulty sensors in all cases. However, these methods do increase the probability and speed of sensor fault detection.

III. Applicability to Building Systems

General

The analytical and statistical redundancy methods discussed above are not currently used in contemporary building monitoring systems. One major reason for this is that the computer system and programming costs of such approaches have been prohibitive. In the last few years, the advent of powerful and fast low cost computers and the hardware and software necessary to integrate them with building monitoring systems appears to make this approach more promising. It should be possible to integrate such a system with a conventional monitoring system. In addition, it should be possible to create generic programs that can be tailored to each particular application with a minimum of programming skills and time. In this way, the often substantial programming costs for such systems can largely be amortized over thousands of systems. Such a system would probably be functionally similar to a general purpose database management system in that the user or his agent would set up the program for each particular application. This approach is feasible because in most cases, high speed is not an important consideration in such installations. For example, it may be acceptable that a sensor checking program be run only once per hour or once per day in a typical monitoring application. Therefore, it is feasible to use a high level programming language such as FORTRAN or BASIC to create such programs.

Some simple automated data checking approaches are currently employed sometimes in data acquisition systems for buildings. The most common check is the value limit concept in which the reading from the sensor is compared automatically to a predetermined high and/or low limit value.

This concept can be viewed as an example of a "smart filter." Figure 1 illustrates this concept and several others that are extensions of this one dimensional limit value filter concept.

The closest related approach would be to develop multidimensional limits as illustrated in the central graph in Figure 1. Frequently the value of one parameter bears some known relationship to another parameter. At any one value of parameter "A" the limits that would be acceptable for parameter "B" can be defined much more strictly than the limits that would be acceptable for "B" over

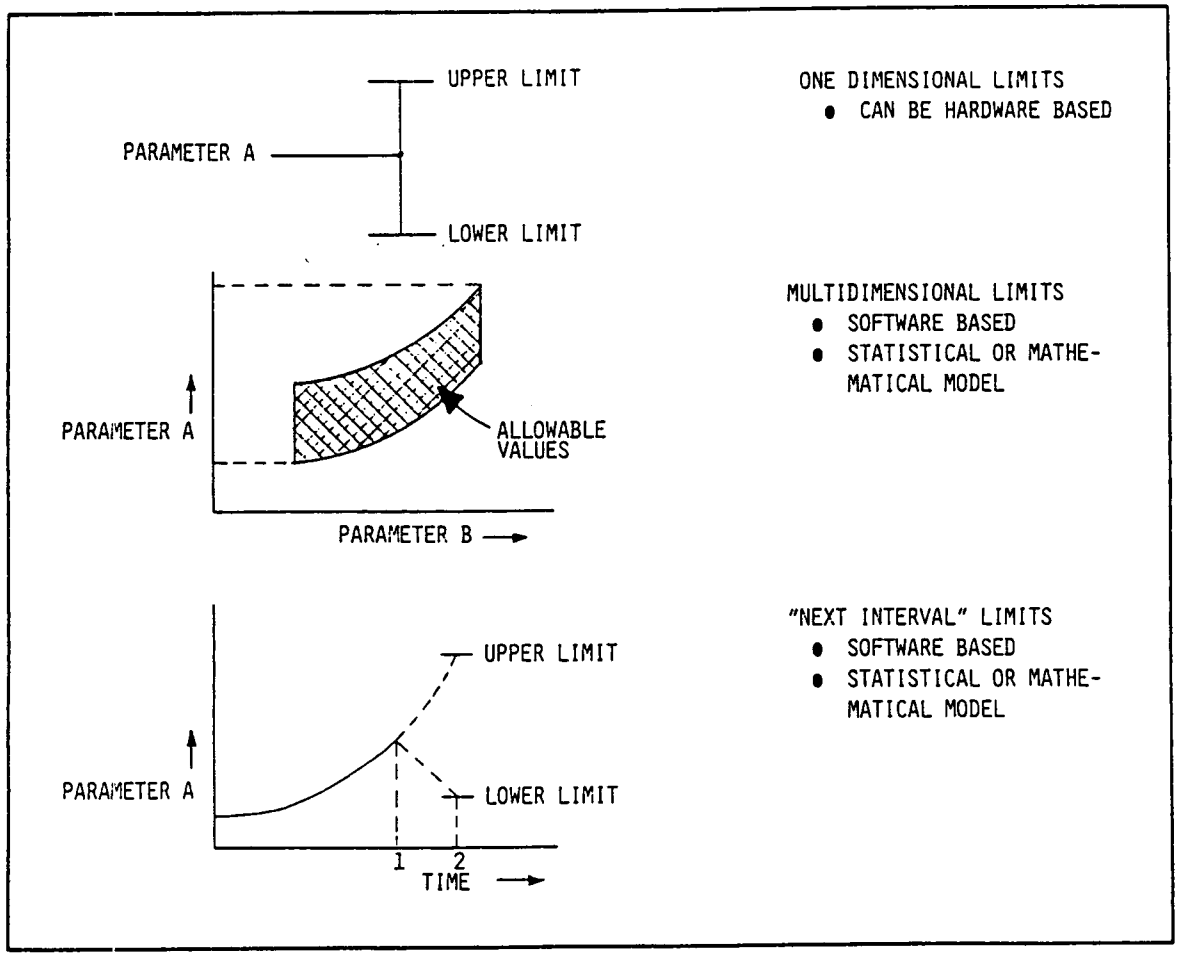

Figure 1. Smart Filters

all values of "A". Thus, the limits for the parameters are defined by a multidimensional envelope rather than two limit points. In theory this envelope could be developed using statistically collected data from the operating system and each new data point could be compared statistically for reasonableness when compared to the operating history of the system.

A more simple "smart filter" approach is illustrated in bottom graph of Figure 1, the "next interval limit." This type of filter continuously updates the allowable limits for the readings that will be taken in the next time interval based on the last reading and either statistical, analytical or judgemental estimates for reasonable high or low changes in that time period. This represents a fairly easily achievable refinement over the simple one dimensional limit concept described above.

Drift in sensor readings is much more difficult to detect and usually requires recalibration of the equipment by technicians. An alternative software approach to drift detection is illustrated in Figure 2. In this simple example two sensors provide readings on some parameters in a unit operation, say input and output temperature of a specific device. Analytical models are usually available which can predict the output temperature, T_2, given the input temperature T_1. If the variance between the predicted T_2 and the sensor T_2 reading are recorded over time the variance will generally be random with possibly a slight linear trend indicating some constant disagreement between the model and the real system. Drifting sensors will show up as a trend in the variance which can be tracked and noted by the computer.

AGA Heat Pump Field Test Example

An example of an integrated data acquisition system (DAS) that utilizes software routines executed in real time to check on the accuracy of the data collected is described below. Also, examples of how additional features could be incorporated are discussed. The system was created by Mueller Associates Inc. under a contract with the American Gas Association. The primary function of the DAS is to monitor and report on the performance of field-installed residential heat pumps. The AGA and its

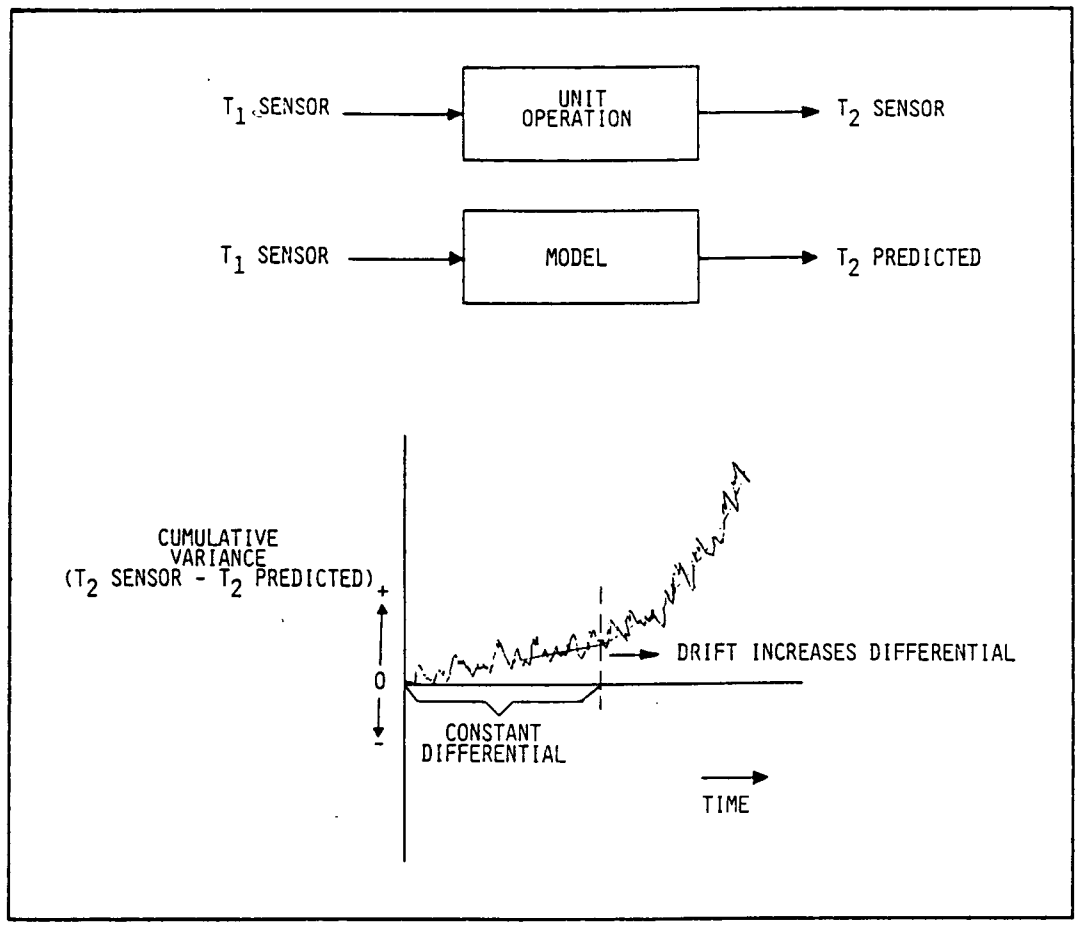

Figure 2. "Drift" Detection

member utilities are interested in measuring the performance of electric heat pumps installed in residences in their various service areas, since heating system installers often advocate heat pumps in competition with conventional gas heating and electric cooling systems. Previous experience has shown that, the performance and efficiency of heat pump systems in residential applications is sometimes overstated. To date, approximately 18 test sites have been selected across the country. Fourteen of these sites have been instrumented and are currently operating and collecting data.

System Description

The AGA Heat Pump Data Acquisition System is based on an IBM Personal Computer equipped with a 256K memory, two 5 1/4 inch mini floppy disk drives, a real time clock, a monochrome monitor, two internally-mounted circuit boards, two external circuit boards and 15 sensors to measure building and HVAC system performance. The circuit boards and a data acquisition program turns the IBM PC into a low cost data logger.

Sensors

The following sensors are installed in the DAS as illustrated in Figure 3.

- Four voltage source temperature sensors
  - o Outdoor (ambient) temperature-two sensors
  - o Indoor temperature
  - o Return air temperature
- Six watthour pulse counters
  - o Whole house consumption
  - o Indoor fan/coil unit plus resistance heat
  - o Outdoor (compressor) unit
  - o Three supplementary meters for measuring power consumed by the hot water heater and other building systems
- One thermopile to measure the air temperature change across the coil
- Three event switches to allow the operating time of the compressor,

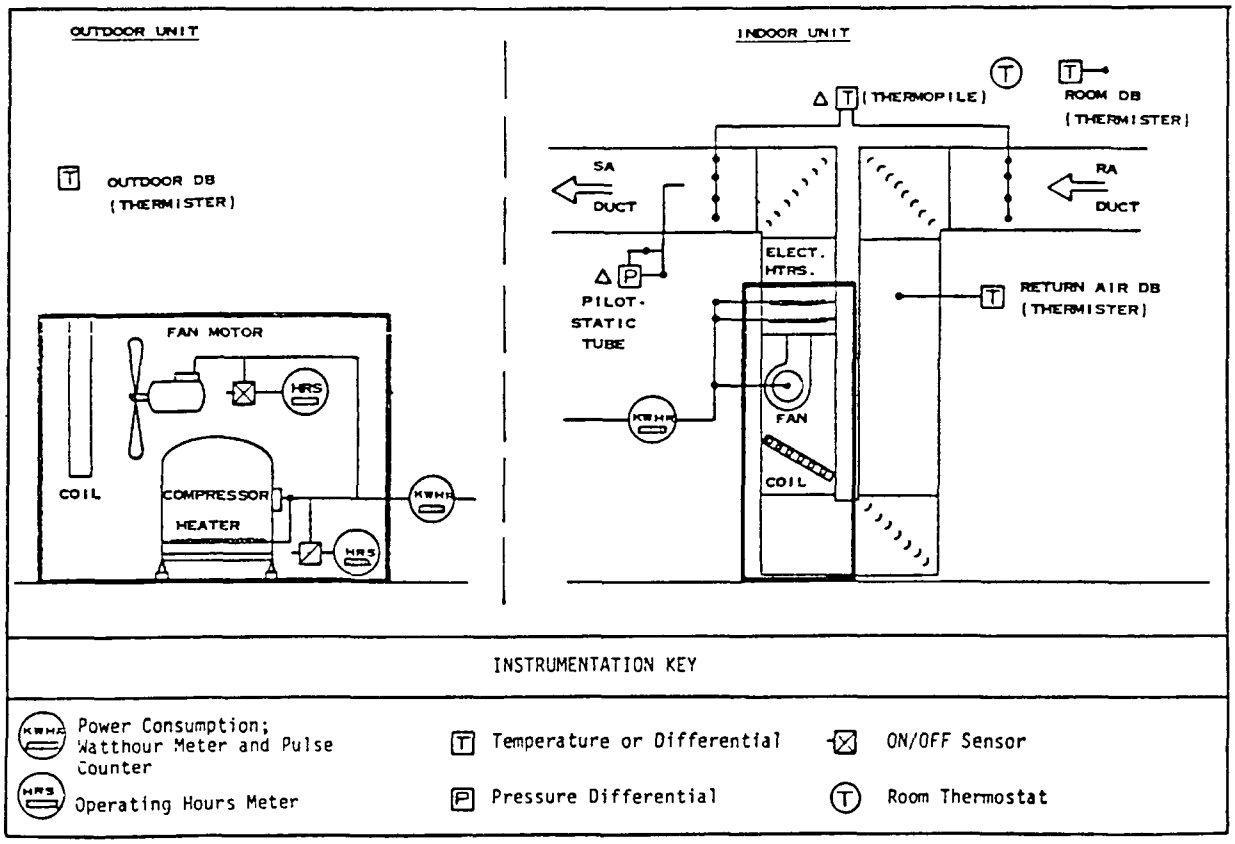

Figure 3. Preliminary Instrumentation Layout (Heating Mode Only)

outdoor fan, and indoor fan to be determined

- One pitot pressure probe to monitor the air flow rate in the HVAC duct

The temperature sensors are integrated circuit transducers that provide a voltage output that is proportional to temperature. The accuracy of the sensors is insensitive to the voltage used to power the sensors.

The watthour meters are a new design that are programmable and have a liquid crystal display. The meters contain a single pole, double throw electronic relay that changes state every 0.72 watthours. The DAS powers this relay and monitors its output with a counting register.

The thermopile is used to monitor the air temperature change across the heating/cooling coil when the system is in the heating air or cooling mode. It also provide a performance check for the heat pump output.

The event switches permit the DAS to determine the running time of the various power-consuming components of the heat pump system. This also indirectly permits the determination of the amount of time that the system operates in the defrost mode, an important factor in heat pump system efficiency.

The Pitot probe is mounted in the supply or return air duct and measures the air flow rate. The pressure signal from the Pitot probe is converted into a voltage signal by a 0-0.1 inch pressure transducer. The accuracy of Pitot probes in general is not very high, but does provide a reasonably precise method of determining if the air flow rate has changed over time.

Circuit Boards

Four circuit boards are used to convert the IBM PC into a datalogger. All of the boards were manufactured by the Metrabyte Corporation of Stoughton, MA.

Two of the boards are mounted internal to the PC in expansion slots #1&2. One of these boards, the DASH-8, contains the analog/digital converter and associated firmware (software stored in permanent memory). The other board, designated CTM-5, contains counting registers that are connected to the watthour meter pulse counters.

The remaining two circuit boards are mounted externally and are connected to the DASH-8 board by ribbon cables. The STA-08 board is a physical interface for all of the wires that connect the sensors with the DASH-8 board. The EXP-16 board is used to amplify the signal from the thermopile and provides cold junction compensation.

The DASH-8 is supplied with a machine language program that permits access to the A/D converter and capture of the data. The maximum A/D conversion rate is in the range of 20,000 conversions per second, well in excess of the needs of the test program.

Software

The DAS relies heavily on its software or computer program for proper function. Figure 4 illustrates the overall data reduction and analysis logic. The operating program is composed of about 800 lines (about 10000 characters) of instructions written in IBM BASIC. The BASIC language was used because it is a simple and versatile high level language and it is very easy to modify. The program reads 15 data channels (12 analog and 3 digital) once every second during the startup mode and once every five seconds during the operation mode. It averages and accumulates the five second data over 5 minute periods and writes the resultant data to a data disk in the second drive.

The software has been designed to run completely automatically. The user simply inserts the program disk in Drive A and a blank formatted data disk in Drive B. When the computer is turned on, the program is automatically executed. In the event of a long power failure, the program will automatically rerun when the power is restored and, by checking the internal clock, can "remember" where it is supposed to be. The program also keeps track of the test site from which the data are being sent by identifying the source on the data disk.

Two additional programs are used to check the data for errors and to reduce it to summary form for human review. Currently, these programs are run manually at intervals from one day to one week. However, it is planned to incorporate features of both of these programs into the original datalogging program so the checking functions will be performed automatically in real time. The current program checks for hardware errors that result in system problems and prepares an error file on the data disk when errors are detected. This function will be expanded

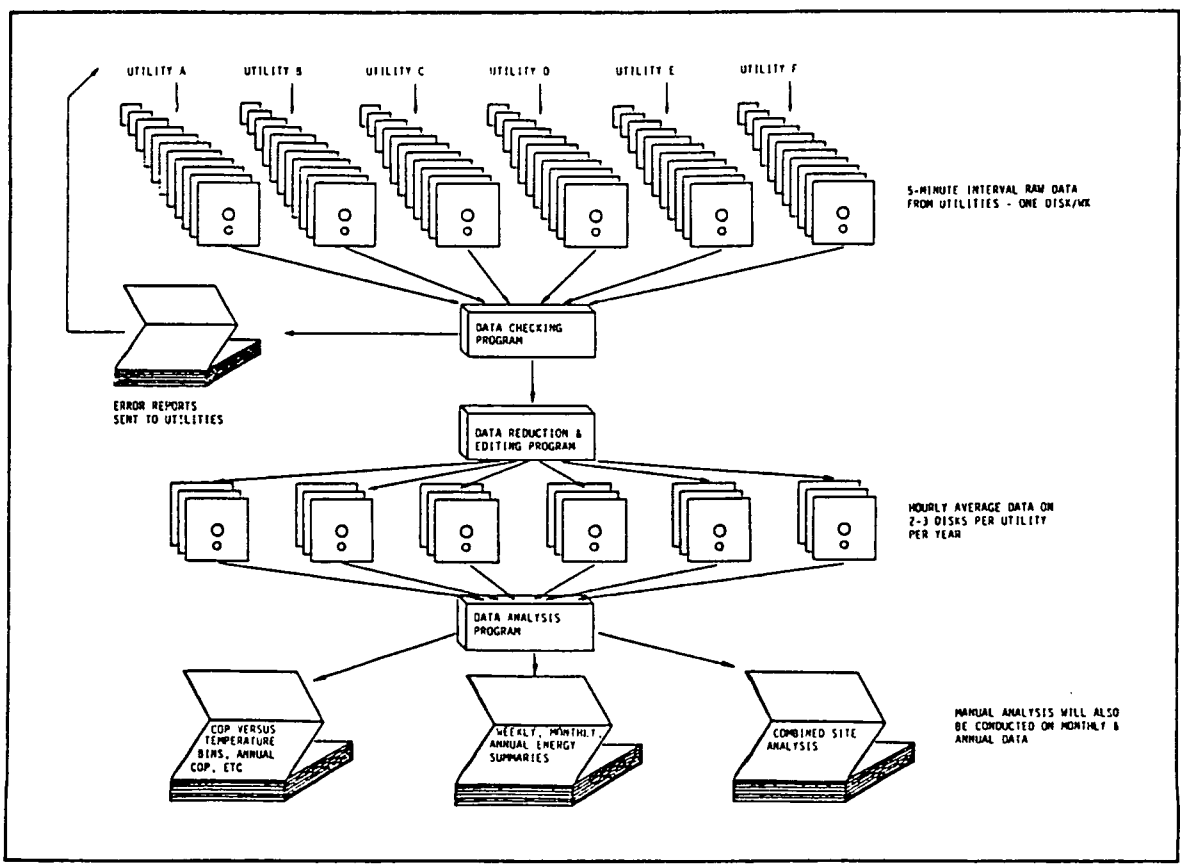

Figure 4. Data Reduction and Analysis Logic

so that some sensor errors will also be identified and saved on an error file. In the current design, there is no need for immediate response to faulty sensors so that no alarm routines are included.

At present four error levels are envisioned. Level #0 indicates no sensor errors. Error Level #1 indicates minor sensor problems that can be eliminated by simple averaging and logic techniques. Error Level #2 implies serious sensor faults that nonetheless can be partially reconstructed by software. Error Level #3 implies uncorrectable errors.

Some of the analytical and statistical redundancy techniques that may be incorporated into the DAS software are discussed below.

Watthour Meters. The watthour meter pulse circuits used in this system are subject to electromagnetic interference from the various electrically-operated appliances in the residence. This interference is usually manifested in extra counts in the registers. This causes a bias error in the watthour readings obtained. One way that such interference can be detected automatically is to use event switches in addition to the meters. When the event switches indicate that the component in question is off, then any counts in the watthour meter registers that are accumulated during this time must be caused by interference. The program will check for this condition and issue a sensor error report if it exists.

Temperature Sensors. The temperature sensor circuits must be electronically filtered to obtain accurate results. The filters used are 5-20 microfarad capacitors. If a capacitor should fail, the sensor results will be incorrect. Filter failure can be detected by monitoring the temperature data collected in the 5 second interval. If the ambient or room temperature changes by more than about 0.5 to 1.0 degrees F over a 5 second period, electromagnetic interference is the likely problem. A simple statistical test can be run on each of the sensors to determine if this happens.

Thermopile. It is possible to check the accuracy of the thermopile by comparing its output with the projected delta T that should be obtained when the heat pump system is operating. Knowing the power used, and the ambient temperature, it is possible to estimate the COP at which the system should operate. The calculated delta T can then be compared with the measured delta T.

IV. Summary

In this paper, we have presented some thoughts on recent developments in real-time monitoring systems and sensor-fault-detection methods that appear to be applicable to building systems monitoring. Although the techniques of analytical and statistical redundancy have been developed for aerospace applications for control in critical systems, variations of these concepts can have applicability when data gathering is the primary concern. Application for building control systems is made difficult by the many variables that are uncontrolled in the building environment.

The software based concepts discussed can make loss of extended portions of data less likely by identifying bad data early-on. In addition, they can substitute for technicians site visits in some instances.

We have also presented a description of a small software-based monitoring system currently being used at 18 sites across the U.S. to monitor the performance of residential heat pump systems as an example of possible application of the concepts discussed.

V. References

1. Delaat, John C. and Merrill, Walter C., "A Real-Time Implementation of an Advanced Sensor Failure Detection, Isolation, and Accommodation Algorithm," NASA-Lewis Research Center, prepared for the Twenty-second Aerospace Science Meeting, sponsored by the American Institute of Aeronautics and Astronauting, Reno, Nevada, January 9-12, 1984, NASA TM-83553.

2. Merrill, Walter C., "Sensor Failure Detection for Jet Engines Using Analytical Redundancy," prepared for the Twentieth Joint Propulsion Conference, AIAA, SAE, and ASME, Cincinnati, Ohio, June 11-13, 1984, NASA TM-83695, AIAA-84-1452.

Session V

FIELD EXPERIENCES

Residential Demand Controller Field Test

Richard L. Aicher
Pennsylvania Power & Light Company
Allentown, Pennsylvania

James A. Butt
Lehigh University
Bethlehem, Pennsylvania

Abstract

Pennsylvania Power & Light Company (PP&L), in conjunction with Lehigh University, has developed a microprocessor based demand controller for use in residential and small commercial buildings. In order to verify the performance of the controller, a field test is being conducted in four residences.

The controller operates by receiving demand pulses from the utility meter and calculating every minute a 15-minute billing demand (sliding window demand). During the customer's on-peak period, the controller compares the calculated demand to a customer set or default target demand. If the target demand is in danger of being exceeded, the controller will send a signal over the house wiring to a receiver which will turn off a major energy-using appliance (space heating or cooling system, water heater, etc.). When the calculated demand decreases, the controller will send a signal to the receivers returning control of the appliance back to its own local control. During the customer's off-peak period, the device exercises no control.

The data acquisition system had to provide information on the energy usage and demand of the appliances and the times and effect when the controller exercised its ability to control loads. The data acquisition system had to differentiate between the controller's response in turning off a load and the appliance's local control shutting itself off.

The heart of the data acquisition system is a Timex/Sinclair 1000 personal computer. This computer collected data and transferred it to a cassette tape. Energy demand and usage was collected by Westinghouse four-track demand recorder. All the data will be analyzed on the Corporate mainframe computer.

Introduction

PP&L, as part of its load management strategy, instituted voluntary time-of-day rates for its residential, commercial, and industrial customers. These rates included on-peak demand charges. It soon became apparent that some form of economical load control would be useful for helping residential and small commercial customers to take advantage of these rates.

The residential demand controller was developed to provide a low cost and effective load device which could be implemented on a large scale in order to control peak load growth and minimize the need for generation plants. For customers on time-of-day rates the device will automatically, by means of its microprocessor logic, allow the customer to achieve the optimum demand setting for his particular needs.

How It Works

The device operates by receiving demand pulses from a pulse initiator equipped utility meter. The homeowner uses the device's keypad to input the day of the week, on-peak starting and ending times, demand target, and whether each load will be subject to the device's control. These values are inputted only once unless the homeowner wishes to change a setting. The device controls loads using line carrier frequency encoded messages sent over the existing house wiring to BSR™ or Leviton™ type receivers.

The controller continuously receives pulses from the utility meter and uses them to calculate a 15-minute demand every minute. Twenty-three minutes before the start of the on-peak period, the controller will begin to compare the calculated demand against the control demand. If the calculated demand will be greater

than the control demand, the device will send a message over the house wiring to the receiver of the next available load to be shut off. If the calculated demand is less than the control demand, then the device will send a message to enable the next schedule load to come on if its own local control switch desires. If the controller is operating during the off-peak period, it exercises no control over the loads. The controller can manage up to eight loads in this manner.

Features

The controller's use of standard BSR™ or Leviton™ receivers and the homes existing AC wiring eliminates expensive hard wiring between the controller and the controlled devices. A unique "house code" permits a maximum of 16 load controllers to operate within close proximity in homes served by the same distribution transformer without interfering with each other.

The control algorithm was designed to determine the optimum demand target for each individual residence. The controller will attempt to keep the demand at or below the homeowner specified target. If the situation arises where the controller shuts down all the loads subject to its control and the household demand still exceeds the control target, the device will begin to control at this new level rather than at the previous target level. The target exceeded light will then become lit. The controller changes control targets in an effort to keep the billing demand as low as possible without overcycling loads.

Each month when the utility meter is read, the meter reader will turn a reset switch on the meter. This reset switch will be used by the controller to restore the controlling demand back to the original customer target demand. This prevents the controller from using one month's demand which may be unusually high as the control target for the next month. This allows the controller to seek the optimum control target for each month.

The device uses a rotating priority schedule when turning loads on and off. This schedule operates on the first off-first on theory. As mentioned, the homeowner may at any time remove a load from the influence of the controller. This rotating priority schedule equalizes the number of times individual loads are shed and restored.

Controllable Loads

While the controller is able to control almost all single-phase residential loads, there are some appliances which would cause the homeowner a great deal of inconvenience or provide minimal energy savings. Appliances such as ovens, ranges, sump pumps, stereos, or televisions, would cause too much discomfort if controlled.

The ideal loads for use with this device are those which are thermostatically controlled. These loads come on and off primarily due to temperature differences and generally without the customer's knowledge. These loads can be controlled without too much homeowner inconvenience. The following are some of the more suitable loads:

Space Heating
Air Conditioning
Water Heating
Dishwasher
Clothes Dryer
Dehumidifier
Refrigerator/Freezer

Installation

The controller was designed to be low-cost, flexible, and easy to install.

The device requires a time-of-day meter capable of supplying both demand pulses and a reset signal. These outputs must be wired into the controller. The simplest, cleanest and least expensive method of installing the receivers in a test installation appears to be the placement of the receivers in a NEMA cabinet attached near the house's electrical panel box. The wires are then run from the load's circuit breaker to the receiver and then to the load. The controller is plugged into any household outlet and then the homeowner uses the device's keypad to input the required information.

Field Test

The controllers will be tested in four residences for a period of two years. The purpose of the field test is to determine how well the control algorithm and associated hardware worked, the economics of the controller under the current time-of-day rate, effect on controlled appliances, and customer response to the device.

The data acquisition equipment had to provide information on not only what the demand and energy usage of the house was, but what it would have been if the controller had not been operating. As such, the equipment had to provide information showing when the device was actively controlling a load, when the load would normally come on or off and the length of time the load was controlled. All data collected had to be in a format that would be compatible with the Corporate computer system.

Equipment

The data acquisition system consisted of an interface module connected to the demand controller, undercurrent relays and opto-isolators, a data acquisition module, a Timex/Sinclair 1000 Personal Computer and tape recorder, and a Westinghouse four-track demand recorder.

The demand controller was modified by the addition of an interface module. This module "read" the controller and collected data on the on/off status of the controllable loads as seen by the demand controller, times when the control target was exceeded, power outage occurrences, the month, day, and year and the hour and minute. This information is sent to the data acquisition module.

The actual status of each of the controlled loads is crucial in the analysis of the controller's performance. The controller by sending a signal to a receiver to control will assume that this load is now off. However, the local control of the load may have already turned the load off. The controller instead of turning off the load is actually preventing a load which is off from coming on in this case. In order to determine when a load is actually on or off, Potter & Brumfield undercurrent relays are used. The relays were inserted into the load's wiring in the NEMA cabinet after the receivers. The load wiring is passed through the relay's ring. The reason an undercurrent relay and not an overcurrent relay is used is an overcurrent relay would latch when current is applied and stay latched until the power to the relay goes off to reset. An undercurrent relay drops in and back out by itself. It was observed that the current in thermostat control wiring for space heating and cooling loads was too small (20 ma) to be sensed by the undercurrent relays. A special opto-isolator circuit was designed to detect the current in these control wires and thereby determine when the load was on or off.

Opto-isolators were also used to determine the on/off status of the receivers. These opto-isolators were placed in the NEMA cabinet between the receivers and the undercurrent relays. One opto-isolator circuit could handle two receivers. Opto-isolators were used to sense the voltage and provide an output that the computer could handle.

The information from the undercurrent relays and opto-isolators was sent to the data acquisition module.

The data acquisition module was custom-made to perform a variety of functions. The module has a PIO with two, 8 bit parallel ports for collecting the data of the eight loads as seen by the controller, opto-isolators and undercurrent relays. In addition, the data on the control status, target exceeded, power, and transmitting status is also collected by a second PIO. The data acquisition module also contains a real time clock and a separate PIO for interfacing the clock with the clock in the demand controller. This is important so that data is not transferred while new data is being transmitted. Data is transmitted every minute by the controller during periods of load activity and at least every 16 minutes during periods of no activity.

The data acquisition module also contains a control relay which is capable of turning the tape recorder on and off.

The Timex/Sinclair 1000 with a Memoteck 16K expansion module is the heart of the data acquisition system. The software which drives the data interface module resides in the Timex. This software also performs a very crucial data compression process. There are 32 separate data items which are being monitored. Instead of allocating each item its own record, the items are all combined into one record. This greatly reduces the amount of storage needed. Since data is being transmitted at a maximum rate of every minute and minimally every 16 minutes, the amount of data even using the previously mentioned record format would be quite large. In order to reduce this amount, the software compares a newly transmitted observation to the previous observation. An observation is the values of all 32 data points for a given minute. If the values of all 32 data points of the newly transmitted observation are the same as the previous observation,

a counter indicating the time in minutes that these data valves have remained unaltered is incremented. If any one of the 32 values change then a new record is created and the old record is moved into buffer storage. When the buffer is full, the software will activate the relay in the data acquisition module. This relay will turn the tape recorder on. The Timex will then transfer the data to cassette tape. The synchronization of the controller's clock and the data acquisition module's clock prevents data transmission and data transfer from occurring at once.

A Westinghouse four-track demand recorder is placed outside the house in close proximity to the time-of-day meter. This device records the demand pulses from the meter. The pulses will later be translated into 15-minute demands.

Data Format

The data collected by the Timex is organized into files. The file format used is as follows:

The first six bytes will be a header consisting of the house identifier number, last two digits of current year, month, day, hour, and minute.

After the header comes the records. Each record is 5 bytes long. The first byte contains the control status of the demand controller including the controlling LED, off-peak LED, target exceeded LED, transmitting, and power to controller. The second, third and fourth bytes contain the load status as indicated by the controller, receivers and local switches. The fifth byte contains the time in minutes that bytes 1-4 have remained unaltered.

Each file will consist of 200 records followed by a 6 byte trailer containing the following information: last two digits of current year; current month, day, hour, and minute; and house identifier number. Each file is 1,012 bytes long. One cassette tape can hold about 4 to 6 weeks worth of data.

Data Analysis

When tapes are collected, every month, the meter reader will turn the reset switch on the meter and change the magnetic tape. The magnetic tape will be translated and the pulses converted into 15-minute demands. These demands will be placed on a computer tape which can then be processed.

Every four to six weeks the cassette tape inside the home will be changed. This tape will then be transferred using a Byte Back modem and a Hayes Smartcom modem from a Timex/Sinclair 1000 to an IBM PC/XT. The data files would then be transferred from the IBM PC to the Corporate computer.

By collecting data on the loads as seen by the controller, receivers, and local switches, it will be possible to determine how well the hardware worked. If the status of a load as seen by the controller is not the same as the status as seen by the receiver, then the receiver was not obtaining the signal from the controller. If the controller sent a signal to control a load but the local switch indicated the load was off, then the controller is only preventing the load from coming on. If the controller sends a signal to turn a load back on and the local switch indicates that the load is coming on, then the controller prevented the load from coming on and thus took an active part in controlling the house's demand.

The data collected from the magnetic tape recorder and the cassette tape will be merged together. By examining the house's demand data in relation to the load status, it will be possible to determine how the controller operated and what the demand would have been if the controller was not installed.

The data will be analyzed using the Statistical Analysis System (SAS). The results of the analysis will include: peak monthly billing demands and what the demand would have been without the controller; net monthly change in demand and energy use due to the load controller; minimum, maximum, and average on-off cycle time per load by day, month, and percent of off time due to local and remote control; number of times each load was under control; target setting of the controller and number of times and occurrence when customer demand exceeded target; on- and off-peak energy used; demand contribution to hour of system peak with and without the controller installed.

Results and Conclusions

The controller and data acquisition system have been in operation for three months. In this time, several problems have arisen, which will lead to improvements in future generations of the controller and data acquisition system.

The controller can be knocked off-line by low voltage fluctuations of a few cycles. When this occurs, the software in the controller loses track of the current time and assumes it is in a an on-peak control period.

The Timex/Sinclair is also subject to low voltage failure. The software which drives the entire data acquisition system is in RAM. If a low voltage period of only a few cycles occurs, the Timex shuts down, thereby erasing the data acquisition software from its memory. When the voltage returns to normal, the Timex no longer has a program to execute.

The controller will be keeping track of on- and off-peak periods including Saturday and Sunday; it does not recognize the six national holidays which PP&L has designated as off-peak.

Future generations of the demand controller will have software modifications which will keep track of the time during low voltage failures and will use the on-off peak signal from the utility meter in determining whether an on-peak period is occurring.

The data acquisition system is being modified by the inclusion of a 9 volt Nicad battery to keep the data acquisition system active during low voltage or power failure conditions.

The controller has performed very well. It has managed to keep the demand at or below its target setting for each month. This has resulted in an approximate 5 kw per month saving for the one test participant currently metered.

Data Acquisition and Testing at the Tennessee Energy Conservation in Housing (TECH) Complex*

Van D. Baxter
Oak Ridge National Laboratory
Oak Ridge, Tennessee

Abstract

The Tennessee Energy Conservation in Housing (TECH) complex was built in 1976 and includes five test residences. It has been used to compare the performance of novel heating, air conditioning, and water heating systems to that of conventional systems. Systems tested include the annual cycle energy system (ACES), solar systems, and ground-coupled heat pumps (GCHP) with conventional air-source heat pumps (ASHP) as control systems.

A single Hewlett-Packard minicomputer-based data acquisition system (DAS) serves all five structures. Design of the DAS hardware and software was driven by the long term (annual) test requirements of the ACES and solar systems. The system was set up to scan on a once-per-hour, 24 h/day basis and utilized integrating instrumentation for energy consumption and delivery. Measurement of seasonal and annual performance factors was the primary goal.

More recently the TECH complex and DAS were used to obtain detailed field data on dynamic losses for an ASHP. While the DAS performed adequately, it is felt that the software could have been tailored better for this purpose. However, since the DAS was being used concurrently to provide seasonal performance for GCHP systems, this was not possible.

Introduction

The Tennessee Energy Conservation in Housing (TECH) complex was constructed in 1976 to facilitate the TECH program objective of demonstrating methods of energy conservation in houses. This program was a joint venture of the Department of Energy (DOE), the Tennessee Valley Authority (TVA), Oak Ridge National Laboratory (ORNL), and the University of Tennessee (UT). Figure 1 is an aerial view of the site showing the five test residences. Systems tested at the complex include active and passive solar systems, solar assisted heat pumps, an Annual Cycle Energy System (ACES), conventional air-source heat pumps (ASHP), desuperheater water heater, and ground coupled heat pumps (GCHP). A single minicomputer-based data acquisition system (DAS) has been used to monitor systems in all five test structures.

ORNL-PHOTO 4082-84

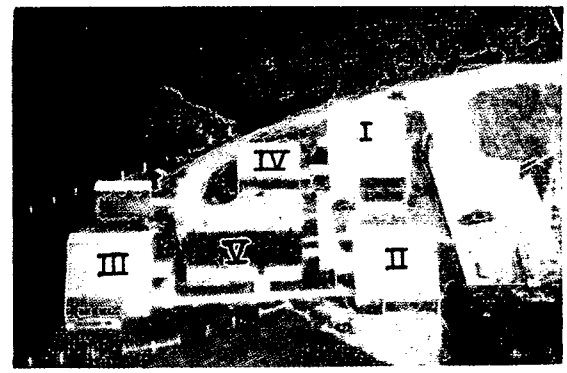

Figure 1. The Tennessee Energy Conservation in Housing complex, Knoxville, Tennessee.

The purpose of this paper is to describe the design and operating characteristics of the DAS and to discuss its performance and limitations.

Data Acquisition System Initial Design and Operation

The initial design was driven primarily by the desire to obtain long term performance data (seasonal and annual) for the ACES and solar systems. In addition, a capability to perform on-site system analysis and calibration was needed. Thus it was necessary to measure energy consumption and delivery over an entire year test period. Data on electricity consumption and heating, cooling, and water heating energy delivery was required. To provide for system analysis, system operating temperatures were needed. In addition, indoor and outdoor temperature and humidity and other weather data were needed to correlate test results with site microclimate conditions.

A minicomputer was used to control the DAS and provide for some on-site processing.[1] The computer scanned the DAS hourly and on demand, produced a real-time hardcopy summary, and recorded the hourly data scan on magnetic tape. The schematic of the ACES system in figure 2 will be useful in explaining the operation of the TECH complex DAS.

*Research sponsored by the Office of Buildings Energy Research and Development, U.S. Department of Energy under contract DE-AC05-84OR21400 with Martin Marietta Energy Systems, Inc.

ORNL-DWG 80-7721R3

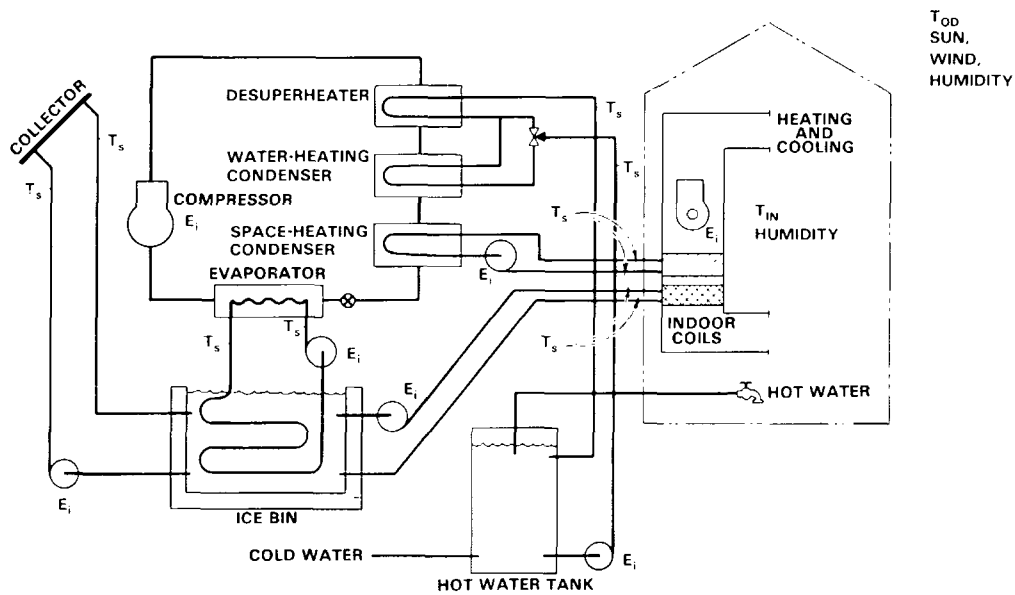

Figure 2. Typical ACES schematic showing system temperature (T_s), electrical input (E_i), and house and weather sensor locations.

Two types of data collection equipment were used: analog scanners (for system and house temperatures and most weather data) and digital pulse counters (for energy consumption and delivery as well as solar radiation and windspeed). Referring to Figure 2, the system temperatures (T_s) recorded by the DAS were instantaneous values at the scan and are meaningful only if the system was in operation at that time. Indoor and outdoor temperatures (T_{id}, T_{od}) and humidity were similarly instantaneous. Digital data were integrated sums for the hour. After each hourly scan digital values were reset to zero.

All system temperatures and outdoor temperature were measured with resistance temperature devices (RTDs). Indoor temperature was measured with solid-state analog device temperature sensors. Outdoor humidity was determined by measuring the dew point temperature using a lithium chloride hygrometer. Indoor humidity was determined by measuring wet bulb temperature.

Energy consumption data (E_i) were integrated from watt-hour (Wh) meter disk rotation. An infrared light source was aimed at the disk and a photo diode detected interruption of the reflected infrared light by passage of dark spots on the disk.[2] The signal was conditioned by a solid-state circuit and sent to pulse counters in the DAS. As a backup, all Wh meters were read manually twice per week and the manual sums cross checked against the DAS totals for each meter.

Heat exchanger heat flows (for heating, cooling, and water heating energy deliveries, etc.), solar radiation, and windspeed were measured using continuously integrating digital circuits. All heat exchangers used in tests at the site during the ACES, solar system, and GCHP tests were either water-to-air or water-to-refrigerant, therefore all heat flows could be measured by monitoring the water side.

Water side heat flow is defined by the equation:

$$Q_{WSHF} = q \ \rho \ C_p(T_1 - T_2) \qquad (1)$$

where Q_{WSHF} is the water side heat flow; q, the volumetric flow rate measured by the flowmeter; ρ, the fluid density; C_p, the specific heat of water; and ($T_1 - T_2$), the temperature rise (drop) across the heat exchanger. Density and specific heat are essentially constant over the range of operating temperatures experienced. The flowmeter signal was used to generate a chain of fixed width pulses. The temperature difference measured by the two RTDs was converted to a frequency which was then electronically multiplied by the flowmeter pulses (figure 3). The resulting product was a pulse chain which is directly proportional to the heat flow.[2] An in situ calibration determined the proportionality constant which incorporated ρ, C_p, and electronic signal conditioning factors. It has been found that this method is most accurate when the temperature frequency is at least 5-10 times the flowmeter frequency.

Turbine liquid flowmeters (figure 4) were used for almost all heat flow signals due to their high accuracy and repeatability (± 0.25% of reading over a 10:1 flow rate range). A nutating-disk type positive displacement meter (figure 5) was used for domestic hot water heat flows due to the wide flow rate range experienced during normal operation. Estimated accuracy of the nutating-disk meter is ± 2.0% of reading over a 50:1 flow range.

Solar radiation was integrated by converting the millivolt output signal of an Eppley pyranometer into a pulse chain which was accumulated in a pulse counter. The wind speed sensor (a three-cup anemometer) produced a pulse chain output directly. This pulse chain was accumulated in a pulse counter, thus yielding the average windspeed over each hourly data integrating period.

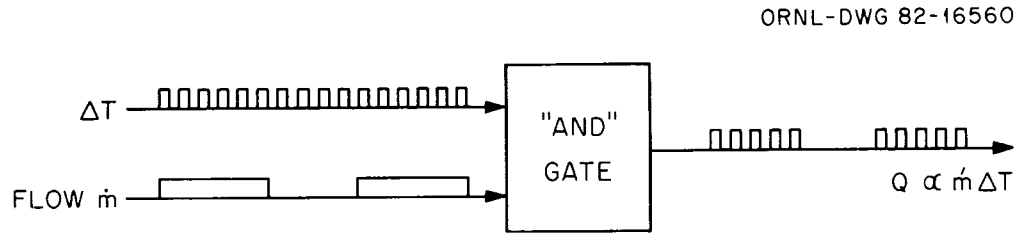

Figure 3. Electronic multiplication of temperature difference and flow rate pulse chains.

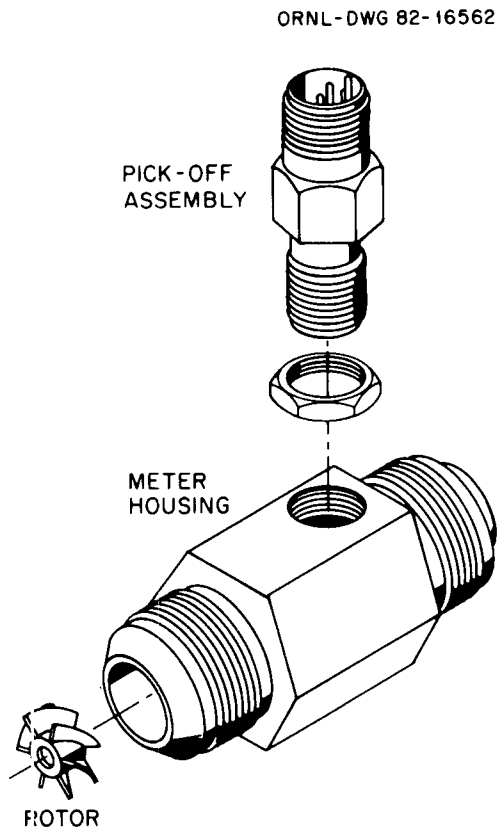

Figure 4. Turbine liquid flow meter.

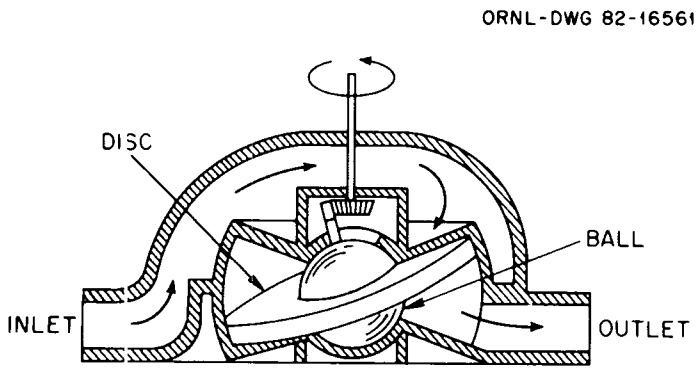

Figure 5. Positive displacement liquid flow meter with register output shaft.

Figure 6 shows a schematic of the DAS operation (part a) and a picture of the DAS as it presently exists (part b).

Magnetic tapes were transferred weekly from the TECH DAS to ORNL where the data were off-loaded, processed, and placed in permanent disk storage as weekly data sets. During processing, the data were checked and out-of-range or missing values flagged. A copy of each weekly set was transmitted to UT. Since there was normally over a week's delay between when data were taken and when a summary was available, it was imperative that the hardcopy output be available on-site for analysis and early detection of failures. A technician normally was at the site 2-3 days per week to visually scan the hard copy output for malfunctioning signals and system problems. Therefore, most data glitches were held to a maximum of 3 days.

DAS Performance, Long Term System Tests

The TECH complex has primarily been used to compare the seasonal and annual performance of advanced systems (ACES, solar systems, and GCHPs) to that of conventional ASHP systems. With the exception of the first year of operation, the DAS operated very reliably. The system operated 24 h/day, 365 days/year with an average of less than 1% down time per year. This high level of reliability was primarily due to the use of an uninterruptable power system (ups) installed in late 1977.

Performance of the advanced systems tested at the TECH complex has been well reported (refs. 3-7). Table 1 gives a sample of test results for conventional ASHPs, ACES, solar systems, and GCHPs showing loads measured and performance factors. Uncertainty analyses have shown that the accuracies of hourly heating, cooling, and water heating load measurements are ± 3.4%, ± 5% and ± 1.7% respectively. Electricity consumption measurement accuracy was ± 0.1%. Occasional DAS outages and critical circuit malfunctions degraded these accuracy levels; however, overall accuracy of reported loads and performance factors is felt to have been no worse than ± 5% for any one month.[5]

Modifications for ASHP Dynamic Loss Tests

A test program to obtain quantitative field data on ASHP dynamic losses (cycling, frosting, and defrosting) was initiated in 1981.[8,9] These new tests brought with them additional data acquisition needs. First, it became necessary to directly measure

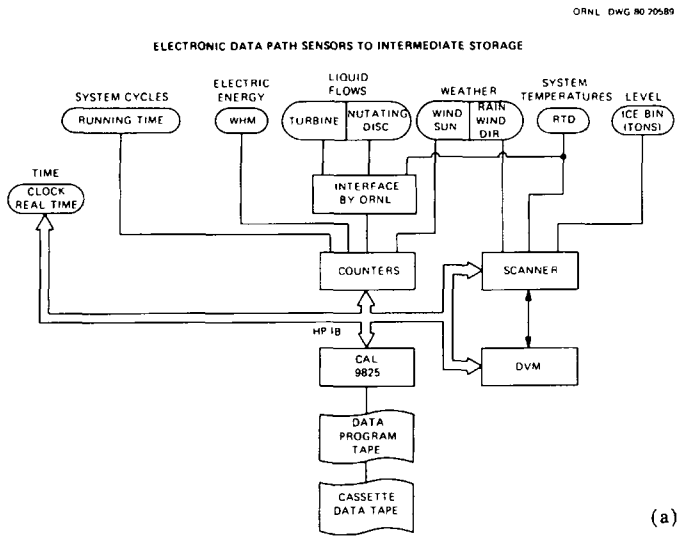

(a)

ORNL–PHOTO 1812–83

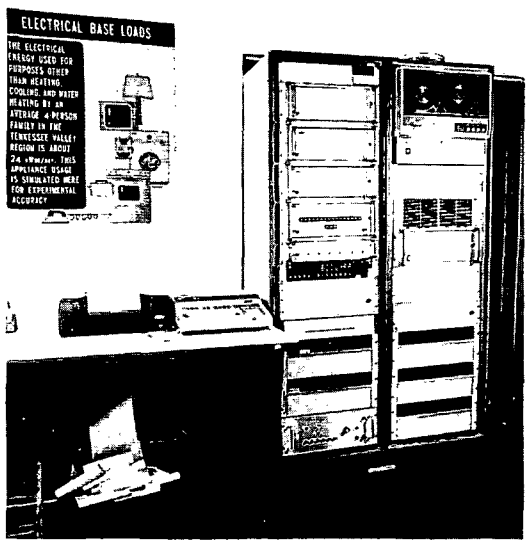

(b)

Figure 6. Data acquisition system: (a) schematic (WHM = watt-hour meter, RTD = resistance temperature device, DVM = digital voltmeter); (b) photograph of system.

the heating and cooling output of the ASHP. In prior tests, the ASHP output in house III had been assumed equal to that of the ACES in house II since the houses were mirror-image twins. The seasonal loads of houses II and III had been shown to be identical within 2%.[10] For the dynamic loss tests, however, it was necessary to know the ASHP output at time of delivery. Additionally, to separately determine the fraction of energy consumption attributable to each dynamic loss mode, it was necessary to split energy consumption and delivery data into three parts: start-up transient, normal or steady-state, and defrost.

TECH facility personnel developed a unique method for measuring the air side heat flow for the indoor unit of an ASHP. Two ten foot temperature averaging RTDs were located at positions T1 and T2 (figure 7). A rotating vane anemometer head with electronic readout was used to measure duct air speed.

Table 1. Delivered loads and Performance Factors for five systems tested at the TECH site.

System (test period)	Loads (GJ) Space Heating	Water Heating	Space Cooling	Annual Performance Factor
ASHP[1] (1979-80)	34.29	13.57	22.70	1.73
ACES[2] (1979-80)	34.40	14.34	22.65	3.08
Direct Solar[3] System (1977-78)	41.08	3.49	NA[6]	2.21
Solar-Assisted[4] Heat Pump (1980-81)	29.75	NA	NA	3.16
GCHP[5] (1982-83)	42.03	NA	NA	2.60

[1] Includes electric resistance water heater (Ref. 5)
[2] Ref. 5
[3] Ref. 3
[4] Ref. 6
[5] Ref. 7
[6] Not applicable

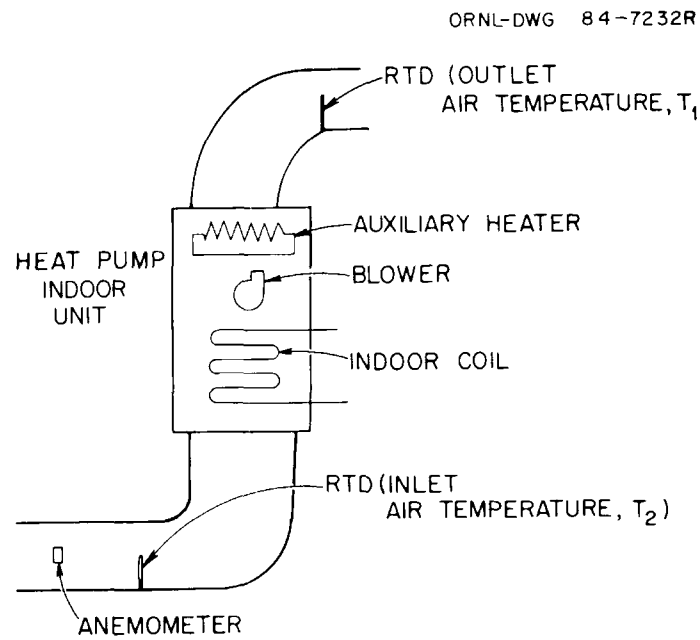

Figure 7. Schematic of heat pump indoor unit showing location of air side heat flow instrumentation.

These devices formed the basis for the air side heat flow measurement. The total air side heat flow measurement was calibrated for heating by turning on the blower and electric resistance heating elements to supply heat at a measured rate, Q, to the air stream. The rate at which heat is supplied to the moving air is:

$$Q = \rho V A C_p \ (T_1 - T_2) \qquad (2)$$

where ρ is the density of the air, V is the air stream velocity, A is the cross sectional area of the duct, C_p is the specific heat of the air at constant pressure, and $(T_1 - T_2)$ is the indicated change in temperature of the air stream across the indoor unit. During calibration, Q is measured by a Wh meter, V by the anemometer, and the temperature difference $(T_1 - T_2)$ by the RTDs. Equation 2 now becomes:

$$Q = KV(T_1 - T_2), \ or \qquad (3)$$
$$K = Q/V(T_1 - T_2).$$

The quantity, K, is a value which contains ρ, C_p, A, and a factor which describes the velocity profile in the duct. Since the product of ρ and C_p changes by less than 2% over the range of operating conditions, and the air flow profile is invariant due to the constant speed blower used, the value K can be judged relatively constant. Figure 8 shows the heating calibration results of one of these devices at ORNL's Karns test facility.[11] The air velocity (measured as a frequency by the anemometer) and temperature difference were electrically multiplied together as previously discussed and stored in pulse counters.

Sensible cooling calibration was obtained in a similar manner except that Q was calculated with Equation 2 by measuring the air flow at the return air grill, the temperature difference $(T_1 - T_2)$, and the return air humidity (to obtain ρ and C_p). Sample calibration results are shown in figure 9.

The accuracy of this technique is estimated to be better than 5% for sensible heating and from 5-10% for sensible cooling. Latent cooling was estimated by measuring condensate collection with a tipping bucket rain gauge (accuracy estimated at about 5%). Each bucket tip caused a contact closure, thus sending a pulse to a counter in the DAS. As a backup to the latent cooling measurement, the condensate was collected in a large barrel and the accumulation checked weekly against the DAS total.

To split the data streams into the three desired parts, a data gating interface was devised. Figure 10 is a plot of heat pump capacity vs. time for a typical cycle illustrating the data storage concept. At the beginning of each cycle for the first 2-5 minutes (fixed by timer in DAS) data were stored in start-up transient channels. Subsequent data were stored in normal (or steady-state) channels. During heating, these normal-mode data included the effects of outdoor coil frosting. In the event of a defrost, data were stored in defrost channels for the defrost duration and for a 75 second (fixed) recovery period immediately following.[8]

Results of the dynamic loss tests have been reported in detail in references (8) and (9). Table 2 gives energy consumption due to the various dynamic losses over two heating seasons along with uncertainties for hourly measurements of each loss component. Uncertainty for the off-cycle loss was low because it was a Wh measurement, which is very accurate. Frosting, start-up transient, and defrost losses were determined by taking the difference between actual performance and assumed steady-state performance (i.e., with no dynamic losses).[8] For frosting and start-up transient losses, these differences were normally small

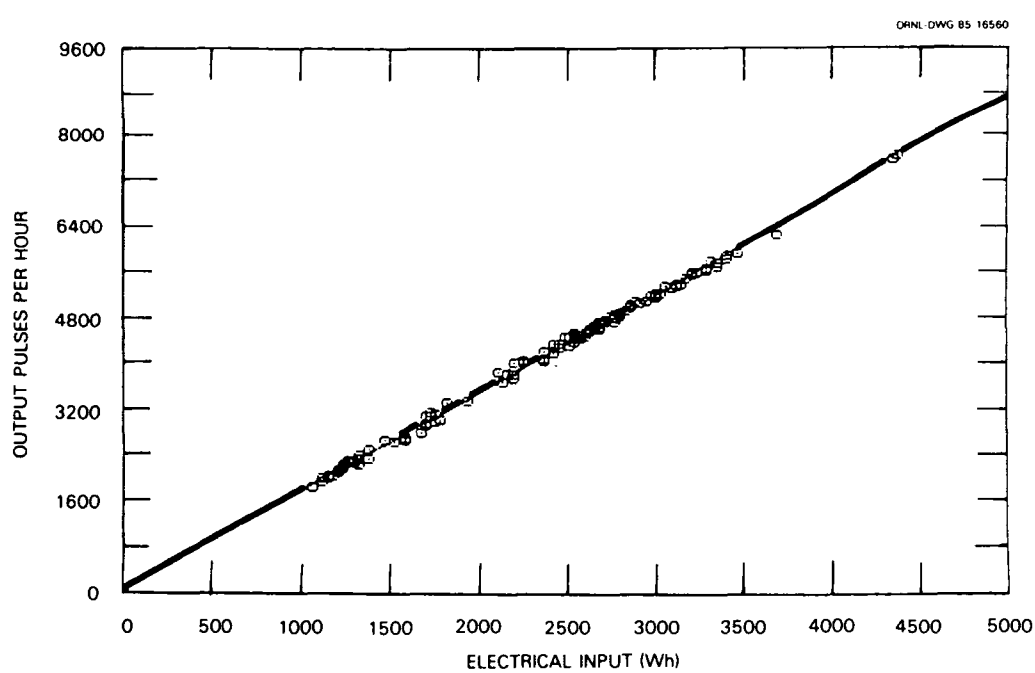

Figure 8. Heating mode calibration of Btu meter at Karns house 2 on January 1–7, 1985.

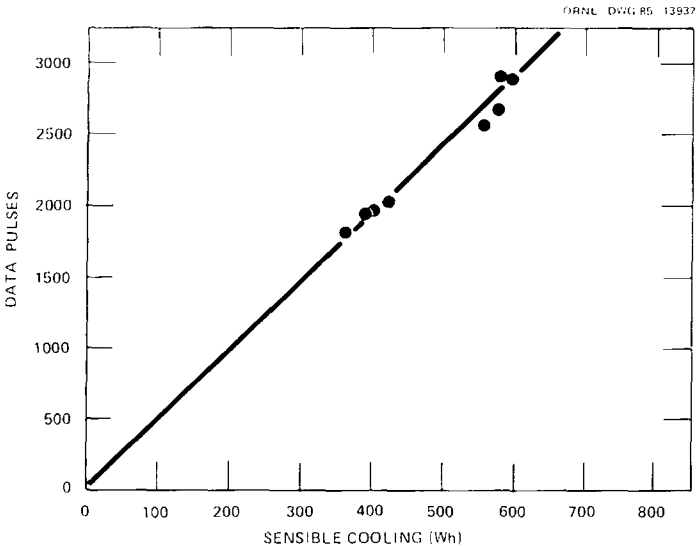

Figure 9. Air side heat flow cooling calibration.

Table 2. Energy Consumption Penalties due to Dynamic Losses and Uncertainties (1981-82 and 1982-83 heating seasons)

Energy Use Due To	kWh	Uncertainty[a] (%)
Cycling		
Off cycle parasitics	177.1	0.2
Start-up Transient	456.6	14.6
Frosting	198.9	27.8
Defrosting	552.2	0.8

[a] Average for hourly measurements

relative to the two components and the uncertainty tended to be large. In the defrosting case, the difference was much larger and the uncertainty small.

Limitations

The major limitation of the TECH DAS has always been the fact that a single system was used for all houses. Since the computer was not capable of multi-tasking, all test systems had to use a single scan rate. This has not proved to be a major inconvenience for most of the systems tested. The ASHP dynamic loss tests were perhaps most affected by this inflexibility. While the DAS proved adequate for this test, it would have been desirable to configure the system software to scan immediately after each heat pump cycle. This would have enabled researchers to analyze the data on a cycle-by-cycle basis rather than hour-by-hour with several cycles lumped into each data scan.

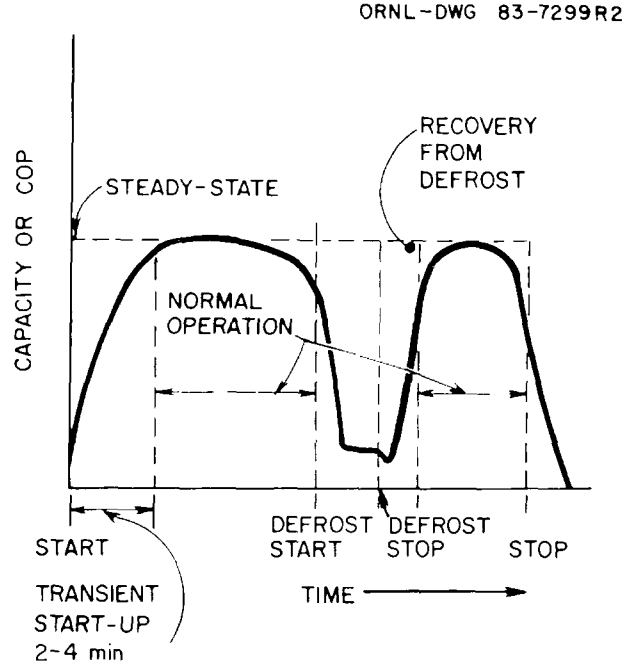

Figure 10. Typical heat pump heating cycle with a defrost.

Conclusions

The following conclusions may be reached concerning the TECH complex DAS.

1. It has operated reliably over the past seven years (<1% downtime).
2. It has provided accurate data on novel and conventional heating, cooling, and water heating systems' annual performance.
3. Though not ideal, it was flexible enough to provide reasonably accurate data on dynamic losses for an ASHP.

Acknowledgments

The author would like to acknowledge the contributions of the following persons to the design, operation, and maintenance of the TECH DAS: G. G. Slaughter, formerly of the ORNL Physics Division, who was responsible for designing the initial DAS and the integrating heat flow sensors; D. R. Miller, ORNL Instrumentation and Controls Division (I&C), who maintained the system from 1978-1982 and designed the airside heat flow and Wh meter instrumentation and the dynamic loss data gating interface; G. Canright, R. A. Hess, and D. L. Marshall, all of I&C, who have maintained the system since 1982 and were responsible for instrumenting the GCHP systems; and A. S. Holman, formerly of the Energy Division, and J. L. Bledsoe, Computing and Telecommunications Division, who wrote and maintained the mainframe data processing and analysis codes.

REFERENCES

1. J. L. Bledsoe and D. R. Miller, *Data Collection and Processing for the ACES*, ORNL/CON-59, Oak Ridge National Laboratory, Oak Ridge, Tennessee (November 1981).

2. B. A. McGraw and D. R. Miller, "Successful Instrumentation Techniques Developed for the TECH Facility," *Solar Engineering - 1983 Proceedings of the Fifth Annual Technical Conference of the ASME Solar Energy Division*, Orlando, FL, April 18-21, New York, NY: American Society of Mechanical Engineers, pp. 244-249 (April 1983).

3. J. F. Bailey and A. F. G. Bedinger, "Performance Results and Operating Experience of the UT-TVA Solar House (1976-1978)," pp. 131-36 in *Proceedings Solar Heating and Cooling Systems Operational Results Conference*, Colorado Springs, Colorado, November 28-December 1, 1978.

4. A. S. Holman et al., *Annual Cycle Energy System (ACES) Performance Report November 1977 through September 1978*, ORNL/CON-42, Oak Ridge National Laboratory, Oak Ridge, Tennessee (May 1980).

5. V. D. Baxter, *ACES: Final Performance Report December 1, 1978 through September 15, 1980*, ORNL/CON-64, Oak Ridge National Laboratory, Oak Ridge, Tennessee (April 1981).

6. B. A. McGraw et al., "Experimental Evaluation of a Series Solar Assisted Heat Pump System," pp. 562-66 in *Proceedings of the 1981 Annual AS/ISES Meeting in Philadelphia, Pennsylvania.*

7. S. Johnson, et.al., *TECH House I Horizontal Coil Ground Coupled Heat Pump: 1982-83 Heating Season Performance*, ORNL/Sub/81-7685/1&92, Oak Ridge National Laboratory, Oak Ridge, TN (February, 1984).

8. V. D. Baxter and J. C. Moyers, *Air Source Heat Pump: Field Measurement of Cycling, Frosting, and Defrosting Losses, 1981-1983*, ORNL/CON-150, Oak Ridge National Laboratory, Oak Ridge, Tennessee (November 1984).

9. V. D. Baxter and J. C. Moyers, "Field Measured Cycling, Frosting, and Defrosting Losses for a High-Efficiency Air-Source Heat Pump," *ASHRAE Transactions* **91**(2), 1985.

10. V. D. Baxter and B. A. McGraw, "HVAC and Water Heating System Field Test Experiences at the Tennessee Energy Conservation in Housing (TECH) Complex," pp. 18-37 in *Proceedings of the ACEEE 1984 Summer Study on Energy Efficiency in Buildings, August 14-22, 1984*, vol. E (Washington, D. C.: American Council for an Energy Efficient Economy, August 1984).

11. W. P. Levins, "Applications of Microcomputers in Data Collection," Proceedings of the DOE Field Data Acquisition for Building and Equipment Energy-Use Monitoring Workshop, October 16-18, 1985, ORNL/CONF.

Measurement of Heating Equipment Performance Improvements

Ulrich Bonne
Honeywell Physical Sciences
and Technology Strategy Centers
Minneapolis, Minnesota

ABSTRACT

In support of our residential heating equipment control business we have experimented over the past decade with several measurement approaches to evaluate options in control strategy, operating mode and design alternatives. The preferred measurements to be discussed here involve the determination of intensive performance parameters. These were then used to further develop our combustion heating system simulation model, which later became known as HFLAME. In this paper, we discuss the field test results on draft hood air flow, infiltration rate, infiltration factor, energy distribution factor and flue temperature profile. We will also discuss a number of unique instruments we developed during this effort. These instruments determine:

- o Balance Point by an on-line, but cumulative measurement of heating system load divided into the (indoor-outdoor) temperature difference.
- o Flue/Stack Gas Combustion Efficiency via measurement of instant flue/stack gas temperature and (in situ) oxygen concentration, inputting the type of fuel, and an on-line analog computation of efficiency.
- o Combustion System Efficiency, for the equipment test lab as well as for the building energy auditor. Such an instrument would measure most parameters of a cycling system normally measured individually to determine the AFUE via the DOE/NBS/ASHRAE Test Procedure or the seasonal efficiency via HFLAME.

One other instrument measuring building thermal resistance, recently developed by J.E. Janssen and R. Rasmussen, will also be mentioned here.

INTRODUCTION

Effective Acquisition of field data requires good planning in terms of meeting the end use objective, as discussed by Dick Grot[1] earlier. Between the extremes of inadequate planning and excessive planning I would like to discuss a special type of planning field data projects which has guided many of our efforts to improve our understanding of the energy utilization performance of combustion heating systems. I am referring to the focused field work to acquire "building blocks" of information needed for the step-wise building or development of a heating system/simulation model. The model I am talking about eventually became known as HFLAME; it provides a user-interactive computation of combustion heating system (and seasonal) energy performance for a wide range of equipment designs, retrofits, operating modes, control options and fuels.

In this paper, I describe the determination and use of field data on: draft hood air intake, including the influence of wind and temperature; infiltration rate, infiltration factor, energy distribution factor, flue temperature profile and seasonal fuel consumption comparison (model vs. actual). In addition, three novel instruments for the direct measurement of total energy performance will be discussed - the balance point meter, the building thermal resistance meter and the combustion system efficiency meter.

DISCUSSION

After assembling the HFLAME program to simulate combustion heating systems, it became evident that the distribution and venting system contributed to the seasonal performance of any particular furnace or boiler. However, we needed to know how to characterize these systems or test their performance and compare this performance and operating cost to other types of equipment in the same building via computed estimates.

In the following sections, I will describe the determination of individual parameters.

Draft Hood Air Flow:

One of the characteristics of vent systems for combustion equipment with atmospheric burners is the amount of draft hood air used by the vent system. By determining not the absolute hood air flow rate but its relation to the flue flow rate we reduced this parameter to a more meaningful and desirable intensive parameter*, D_o. Fig. 1 shows the definition of $D_o = H/F$ (at steady state) which is a dimensionless fraction of flow rates. From O_2 concentration measurements in the flue and stack of several homes in Minneapolis we determined that a value of $D_o = 1.4$ was quite representative of actual systems. This is in contrast to a brief reference in the ASHRAE Hdbk. of Fundamentals, stating that values of 0.4 should be sufficient to provide the draft control function, (i.e. uncoupling the stack draft from the internal furnace or boiler draft).

Influence of Wind and Temperature:

As a next step we became interested in the influence of wind and outdoor temperature on the D_o value. We therefore analyzed a set of flue and stack CO_2 concentration field data provided by IGT[7], which was obtained for each house for two different weather conditions. We then computed the corresponding hood and stack flow ratios $D_o = H/F$ and $S = (H+F)/F$. Fig. 2 and 3 show pairs of data (each number represents a different house) as a function of wind speed, V_W, and indoor-outdoor temperature/difference, T. As shown, an average value of $D_o = 1.4$ looks reasonable. Fig. 4 shows the result of determining the best power function $\{(T_2/T_1)^A + (V_2/V_1)^B - 1\}$ to fit the found ratio of stack flows $\{(D_2 + 1)/(D_1 + 1)\}$, where the subscripts 1 and 2 refer to the two weather conditions #1 and #2. As shown, the fit resulted in A = 0.142 and B = 0.12. Analytical considerations of stack flow based on the influence of outdoor temperature on gas density, viscosity and friction factor are consistent with this weak power function[3].

---

*Intensive parameters like temperature, pressure or concentration are independent of the quantity of mass, air or gas, or burner size (all of these are extensive parameters) and therefore have more of a generic or universal meaning and usefulness.

Infiltration Rate:

Related to the above is the question of total house infiltration as influenced by outdoor temperature and wind velocity. To quantify this relationship, we analyzed field data on infiltration by Tamura and Wilson[4] and Macriss et al[5], obtained during both heating and cooling seasons. The results are shown in Fig. 5, and indicate that the relation

$$I = A_o + A_1|\Delta T| + A_2 V + A_3|\Delta T|V$$

satisfactorily represents the field data from three different houses. Here, I is the infiltration rate in air changes/hour, ΔT the indoor-outdoor temperature difference in F, and V the wind velocity in miles/hour. Except for the absolute signs, this is equal to a relationship developed earlier by D. Harrje[6].

As a corollary, note that the measured air changes of 0.3/h or higher in average size homes are more than sufficient to provide all the air required by the furnace/boiler during operation. Fig. 6 shows a comparison between various levels of infiltration as influenced by outdoor temperature, and the corresponding amounts of furnace air for draft hood and combustion. Note that power burners (without hood) require considerably less air, and modulating power burners even less. The above chart was drawn under the assumption of "good air movement communication", between the furnace and the house interior, rather than having the furnace enclosed in a tight utilities room. Code and city ordinance bodies should study these relationships rather than legislate wasteful "outdoor air to furnace" or worse yet "to return air" ducting requirements which are no longer affordable.

Infiltration Factor, Ø:

While the above house infiltration is part of the building load, both the DOE test procedure and we consider the air for draft control and combustion required by the furnace or boiler as part of the equipment energy budget, if it contributes to building infiltration. In homes equipped with open fireplace chimneys, a lot of warm house air normally escapes up that chimney. When the furnace or boiler comes on, their air requirements can then almost entirely be provided by simply rerouting the fireplace chimney air to the furnace, thus avoiding additional infiltration, i.e. $Ø \simeq 0$. (Ø is defined as the fraction of furnace air contributing to infiltration[3]). We conducted a series of tests in different homes involving the decay of the concentration of a tracer gas (up to a safe level of 1000 ppm methane) due to dilution by infiltration, both with and without the main stack vent/chimney plugged. After determining the stack flow when unplugged, we obtained values of Ø ranging from 0.4 to 1.0, averaging about 0.7,[8,9] which is the value adopted in the present DOE/NBS/ASHRAE test procedure.

Energy Distribution Factor:

Some of the heat released by the furnace or boiler is not circulated effectively throughout the house and therefore it and its local temperature changes are not sensed by the thermostat and do not lead to the expected reduction in seasonal energy consumption. Examples are: casing losses, warm air spilled out of the draft hood during the off-period in systems with stack or vent dampers, as well as avoidance of infiltration losses induced by required combustion or draft hood air. We therefore defined an energy distribution factor, D_E, with $0 \leq D_E \leq 1$, which factors the above heat sources to better represent system energy performance.

Data collected by AGA and IGT[2] on the influence of retrofitting stack dampers on system efficiency improvement were analyzed with HFLAME; retrofit savings were obtained directly by monitoring fuel consumption. Fig. 7 shows a comparison of results between those measured and those predicted. We interpreted the ratio of the comparison values, as plotted in Fig. 7, in terms of D_E. For $D_E = 0$ or 1, none or all of the heat released around the furnace or boiler is useful in terms of energy savings, respectively. As a representative average of these field data we determined $D_E \simeq 0.4$.

To further visualize the consequences of this D_E in achieving various retrofit savings, Table 1 presents the savings for homes with $D_E = 0$ and 1. Note however, that the value of D_{EI} for avoided infiltration may be different than the D_{ES} for spilled heat near the furnace or boiler. I know of no simulation models presently capable of predicting D_E values.

Flue Temperature Profile:

In our quest for understanding how the shape of the flue temperature vs. time profiles influence seasonal efficiency, we obtained data from over 20 different furnace/boiler models/manufacturers for analysis. Having derived analytical functions for each on and off-period flue temperature, we defined a symmetry factor, S[8]:

$$S = \Delta T_{on}(Z)/\{\Delta T_{max} - \Delta T_{off}(Z)\}$$

to characterize these profiles, where Z = time after start of period and T = temperature. We then plotted the computed seasonal system performance versus S for all the provided temperatures in Fig. 8 by taking Z=5 min after start of the on or off-period. The parameters D_3 and D_o represent the amount of off-period burner flow leakage and draft hood flow, respectively. For conventional, atmospheric burners we set $D_3 = 1$ and $D_o = 1.4$, and obtained the bottom set of points, through which we drew the best straight line. As shown, smaller values of S lead to high seasonal fuel utilization efficiencies. This is reasonable since it reflects the fact that slow temperature rise rates and fast temperature drop rates would both contribute to reduced flue gas enthalpy losses. A better approach to characterize these flue gas losses would be to simultaneously measure flow, in order to be able to compute a symmetry factor, based on enthalpy flow profiles.

The plotted values of S ranged from about 0.8 to 1.5. They indicate that designing the heat exchangers to achieve high seasonal efficiencies, a slow temperature rise and a fast decoy would be desirable. However, specific heat exchanger characteristics corresponding to the obtained profiles were not available, and so no general conclusions could be drawn from the above findings. Yet it is clear that control of the circulating fan or pump, stack dampers and power burners can influence S in a predictable direction.

Fig. 8 taught us three other facts about heating systems:

- Addition of an induced or forced draft power burner, with $D_3<1$, increases seasonal efficiency considerably. (It also eliminates the need for the draft hood function since the draft generated by the power burner can be sufficient to overcome and stabilize changing natural drafts resulting from changes in outdoor temperature and wind.)

- Selecting a low off-period leakage[8] burner can provide additional benefits as shown by the seasonal efficiency increase from $D_3 = 0.3$ to 0.1, and

- Seasonal efficiencies equal to and greater than the steady state value are possible with low off-period loss systems, as shown by

the points above the dashed 75% efficiency line, which was the computer imposed steady state efficiency on all these systems.

Data on efficiency acquired from field measurements, see Fig. 9, show that all of the systems of this study except one or two exhibit system efficiencies that are below their steady state value.

Seasonal Fuel Consumption:

To check the accuracy of the heating system simulation we compared the predicted seasonal final consumption with actual fuel deliveries. Fig. 10 shows that the agreement for most cases is within 10%[10]. In an unpublished follow-on study we also compared the HFLAME predicted savings with those actually found in the field, and then extrapolated from these to seasonal fuel and cost savings. All this is presented in Table 2, and again shows that field data and predictions are in close agreement, considering the short (10 days) sampling period. There aretwo things to note. First, the field savings for "New (Flame Retention) Burner" retrofit are smaller than predicted. It appears that we underestimated the burner off-period leakage difference between old and new burners. Secondly. the cost savings are generally smaller than fuel savings because of the involved longer operating hours resulting from the reduction in nozzle size (burner capacity), leading to higher electric consumption.

I would now like to describe some features and results obtained with our lab-built field test meters.

Balance Point Meter:

This simple digital instrument was designed and built here by A. E. Johnson. It displays the ratio of cumulative degree minutes over minutes of equipment operation, i.e. the linearly extroplated temperature difference between room and outdoors which requires continuous equipment operation to maintain comfort conditions. This is consistent with the definition of balance point temperature used in heat pump terminology. Experience taught us to follow daily fluctuations in internal loads and wind speeds for a week to achieve a meaningful value, and then repeat this measurement after implementing the equipment modification.

By way of results, part A of Table 3 shows the balance point temperature differences (BPTD) obtained by F. Schmit for various setback options, by setting the meter indoor temperature to a constant value. As the cumulative effect of longer setback times or temperature increases, the BPTD increases, as shown, by over a factor of two. In Part B of Table 3, the BPTD changes after retrofitting DSI, after reducing the input (see 3rd column) with pilot flame and after closing the fireplace chimney damper. Note that eliminating the pilot or reducing the firing will tend to reduce the BPTD despite achieved savings because of the longer operating hours! To arrive at the achieved savings one might divide the measured BPTD by the new fractional firing rate, 63/98.

Flue Gas Combustion Efficiency Meter:

This instrument, developed as servicemen's furnace/boiler adjustment tool, with support by Consolidated Natural Gas Service Co. of Ohio and Southern California Natural Gas Co., was based on a conventional ZrO_2 oxygen sensor, see Fig. 11. The oxygen sensor output, together with that of a thermocouple located at the

sampling tube inlet was processed (analog circuit) to provide a direct efficiency readout, after inputting fuel type and the desired HHV or LHV-basis efficiency readout. One innovative use of this meter was uncovered by Griffith[11], who was able to diagnose furnace or gas valve start-up anomalies from the shape of the normal decrease of efficiency vs. time to its steady state value.

Table 4 provides the results of a short field study in the Minneapolis area to determine possible boiler efficiency upgrades[9,10]. It indicated that average savings of 5% were possible if the boilers could be operated at 2% O_2. Larger savings were found during a Boston oil burner study, which also included changes in the firing rate leading to reduced flue temperatures[12].

Table 5 shows the result of a similar study conducted for industrial furnaces and ovens. The possible savings here ranged from 0 to 40% with an average of 15%. Note that the fuel prices used to compute cost savings were those prevalent during 1978.

Combustion System Efficiency Meter:

We are presently expanding the use of the above meter to include system energy loss contributions such as cycling, infiltration, etc. in order to get a more representative performance measure consistent with seasonal operating cost. This work is supported by ORNL.

This instrument is expected to determe most of the parameters normally measured individually to find 1) the AFUE via the DOE/NBS/ASHRAE Test Procedure, or 2) the seasonal efficiency via HFLAME by processing data on flue temperature profile, flue and stack oxygen concentration, combustion system load and electric power, indoor & outdoor temperatures, firing rate (from burner or gas meter), availability of a stack/vent damper or power burner, type of ignition, etc.

Building Thermal Resistance Meter:

To obtain a direct measure for building load, this meter records the cool down and heat up of a building over several hours, with a heat source of known output, the meter computes and displays its thermal resistance[13]. The top of Fig. 12 shows one set of results obtained without and with storm windows on a house, resulting in about a 9% increase in thermal resistance. On the bottom, the result of closing a fireplace damper on top of implementing the storm windows increased the thermal resistance to about 16% and reduced its wind-dependence.

This measurement principle has been implemented on a portable microcomputer, which automates the measurement of temperature, controls the operation of the furnace and computes the R-value of the building.

CONCLUSIONS

Among the lessons learned from the field work discussed above, the effectiveness, synergism and reliability achievable by a two pronged analytical and field data acquisition effort stands out. Not only were the data gathered and utilized effectively, but also the HFLAME model development benefited by the realism provided by inputs from field work.

Our work with the balance point meter showed that plotting the data as they were generated helped to assess their quality at a glance, especially in terms of being able to balance out daily fluctuations due to outdoor temperature, wind and resident activities. Taken cumulatively, these effects were smoothed out after 4 to 6 days of operation unless other drastic wind or solar changes introduced major new system loads.

ACKNOWLEDGEMENTS

I am pleased to acknowledge the key participation of R.H. Torborg, A.N.J. Pearman, J.E. Janssen, F. Schmit, A.E. Johnson, and J. Glatzel on the development and testing of the above energy use instruments.

REFERENCES:

1. R. Grot , Paper presented at this Workshop.

2. U. Bonne and A. Patani, "Combustion System Performance Analysis and Simulation Study", Final Report to GRI, Contr. No. 5014-341-0144, Honeywell PSC,Bloomington, MN PB83-161 406, 28 June 1982.

3. U. Bonne, J. E. Janssen, L.W. Nelson and R. H. Torborg: "Control of Overall Thermal Efficiency of Combustion Heating Systems", 16th (International) Symposium on Combustion, MIT, Cambridge, Mass., August 15-21, 1976, Proceedings, p. 37.

4. G. T. Tamura, and A. G. Wilson, "Air Leakage - Pressure Measurements on Two Occupied Houses", ASHRAE Trans., 70, 110-119 (1964).

5. R. A. Macriss, J.T. Cole, T. S. Zawacki and R. H. Elkins, "An Air Infiltration Model for Modern Single Family Dwellings".

6. D. T. Harrje, "Variations in Infiltration in Townhouses Before and After Retrofit". Symposium (#E-6) on Air Infiltration and Air Change Rate Measurements, ASTM March Committee Week, Washington, D.C.,March 13, 1978.

7. T. Zawacki and R. Macriss, IGT, Chicago, Private Communication, 1979.

8. U. Bonne and A. Patani, "Fuel and Cost Efficiencies of Combustion System with Low Off-Period Lossess", Symposium on Pulse Combustion Technology for Heating Applications, Argonne National Lab, Nov. 29-30, 1979, Proceedings p. 190.

9. U. Bonne and R. H. Torborg, "Combustion Efficiency", 1977 AGA Industrial Gas Seminar "Profit from Energy Management", St. Louis, MO, 2-4 Nov. 1977.

10. R. H. Torborg and U. Bonne, "Instrumentation for Adjusting Burners for Improved Efficiency", APCA Paper No. 78-49-6, Houston, Texas, 25-30 June 1978.

11. Jim Griffith, Public Service Electric and Gas Research Co., Private Communication, 1979.

12. U. Bonne, L.Katsman and G. E. Kelly: "Effect of Reducing Excess Firing Rate on the Seasonal Efficiency of 26 Boston Oil-Fired Heating Systems", Conference on "Efficiency in HVAC Equipment and Components II, Purdue University, Indiana, April 12-15, 1976, Proceedings, p. 81 and 376.

13. J. E. Janssen and R. W. Rasmussen, "An Instrument for Measuring Building Envelope Thermal Resistance", Conf. on "Thermal Performance of Exterior Envelopes of Buildings III", sponsored by DOE, ASHRAE and BTECC, Clearwater Beach, Fla., 2-5 Dec. 85.

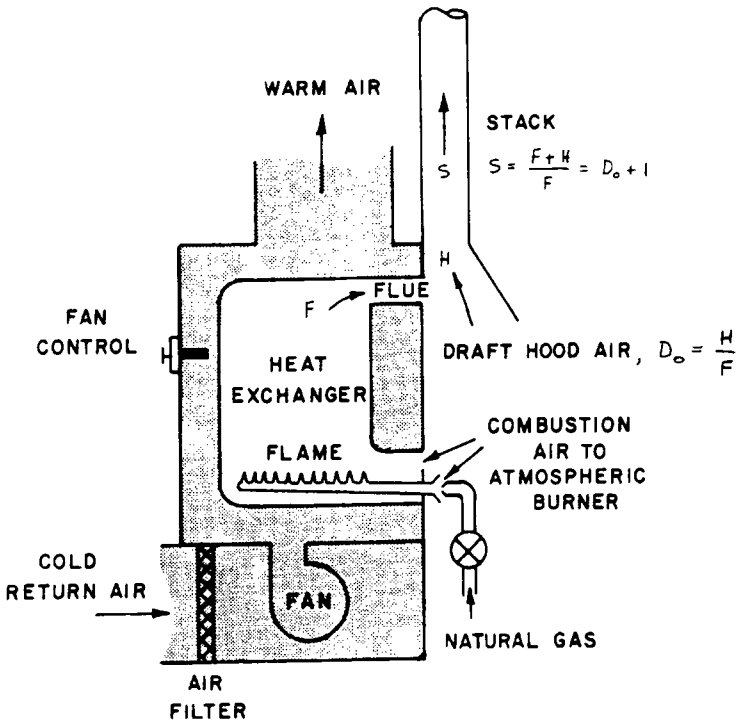

FIG.1. SCHEMATIC VIEW OF A GAS-FIRED FORCED WARM AIR FURNACE. IGNITION AND WIRING OF THE FUEL VALVE, FAN CONTROL AND THERMOSTAT NOT SHOWN.

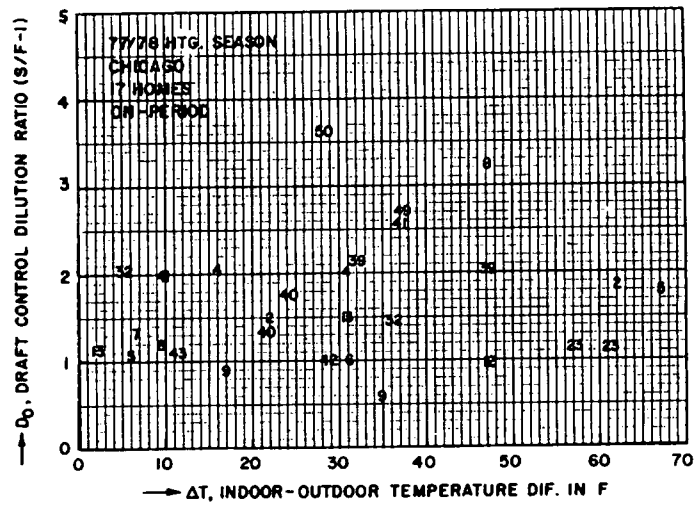

FIG. 2. INFLUENCE OF OUTDOOR TEMPERATURE ON STACK FLOW EXPRESSED IN TERMS OF DRAFT HOOD FLOW.

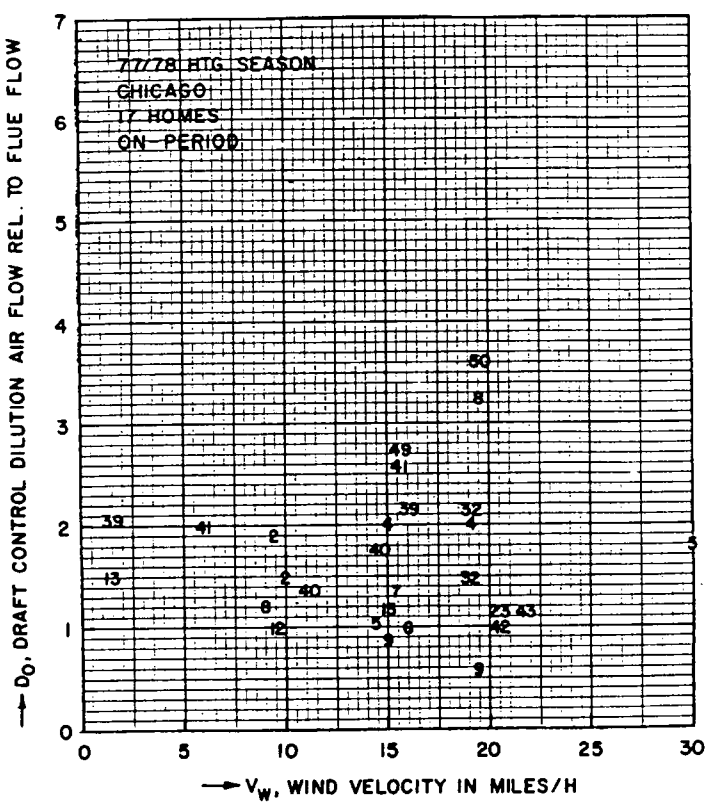

FIG. 3. INFLUENCE OF WIND ON STACK FLOW EXPRESSED IN TERMS OF DRAFT HOOD FLOW.

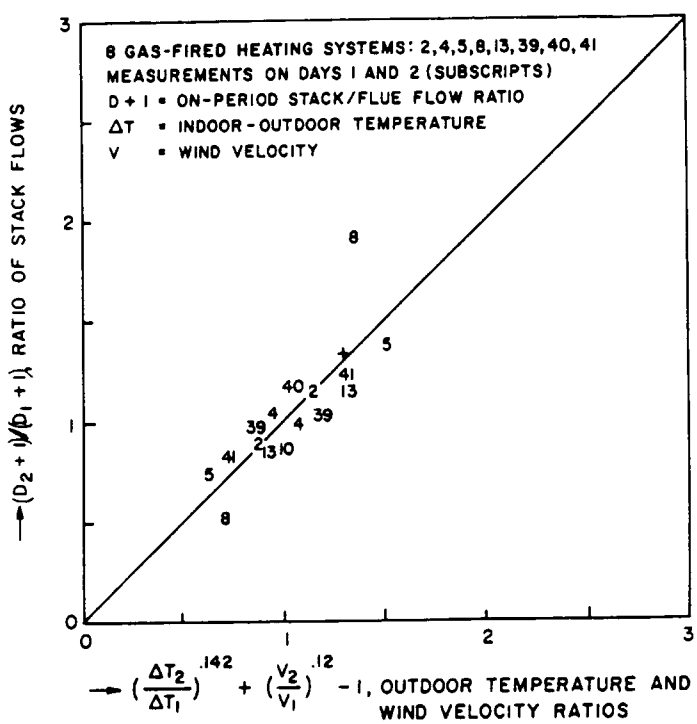

FIG.4
REGRESSION ANALYSIS OF INFLUENCE OF OUTDOOR TEMPERATURE AND WIND VELOCITY CHANGES ON STACK FLOW CHANGES.

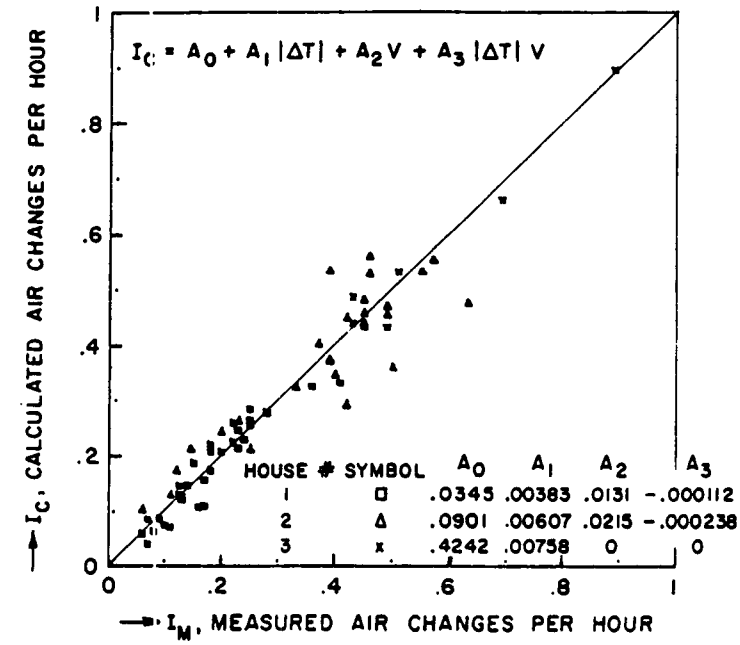

FIG. 5. CALCULATED vs MEASURED INFILTRATION RATE FOR THREE DIFFERENT HOMES. MEASUREMENTS BY IGT.

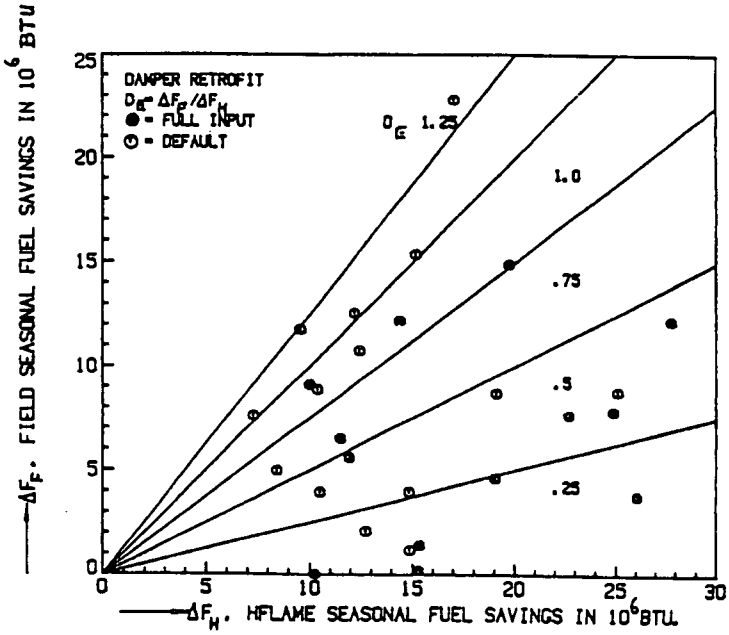

FIG. 7. MEASURED SEASONAL FUEL SAVINGS IN THE FIELD VS. THOSE COMPUTED WITH HFLAME. THE "DEFAULT" DATA WERE COMPUTED WITH AN INCOMPLETE SET OF INPUT DATA.

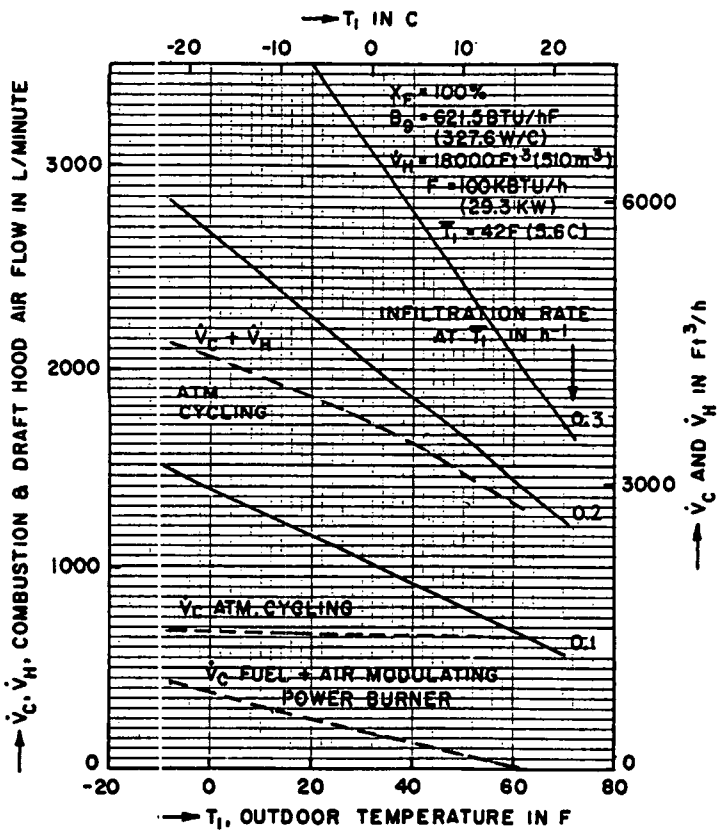

FIG. 6. COMBUSTION AND DRAFT HOOD AIR FLOW vs OUTDOOR TEMPERATURE FOR CYCLING AND MODULATING SYSTEMS. AVERAGE AIR REQUIREMENTS:
--FOR COMBUSTION + HOOD: .021 Ft³/BTU (.002m³/Wh)
—FOR INFILTRATION AT .3/h: .31 (.030)

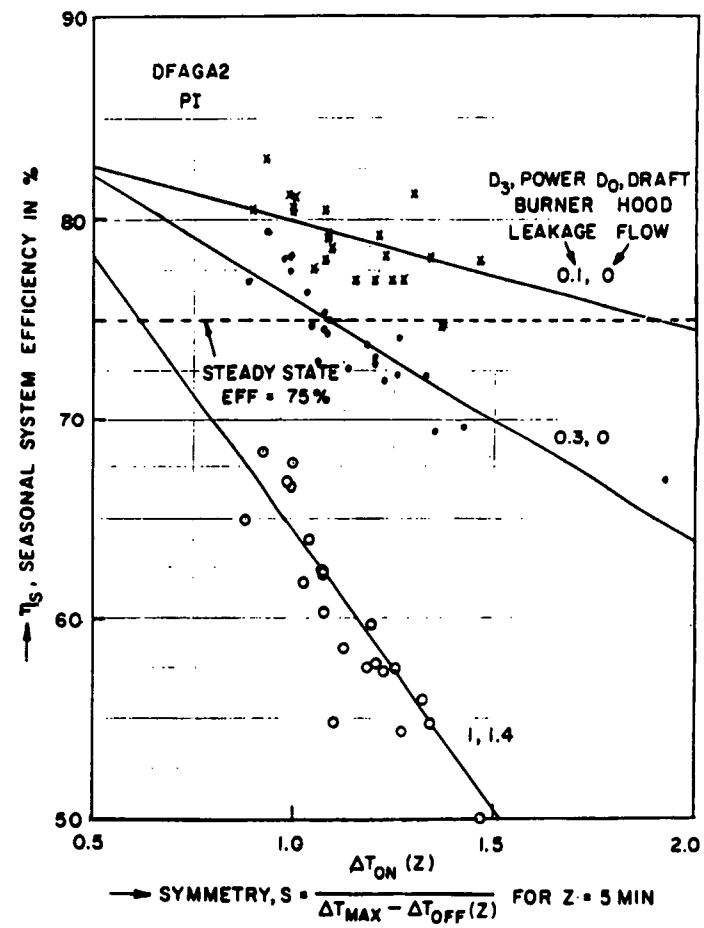

FIG. 8. SEASONAL SYSTEM EFFICIENCY vs SYMMETRY FOR EQUAL SYSTEMS EXCEPT FOR THE ON AND OFF-PERIOD FLUE TEMPERATURE PROFILE

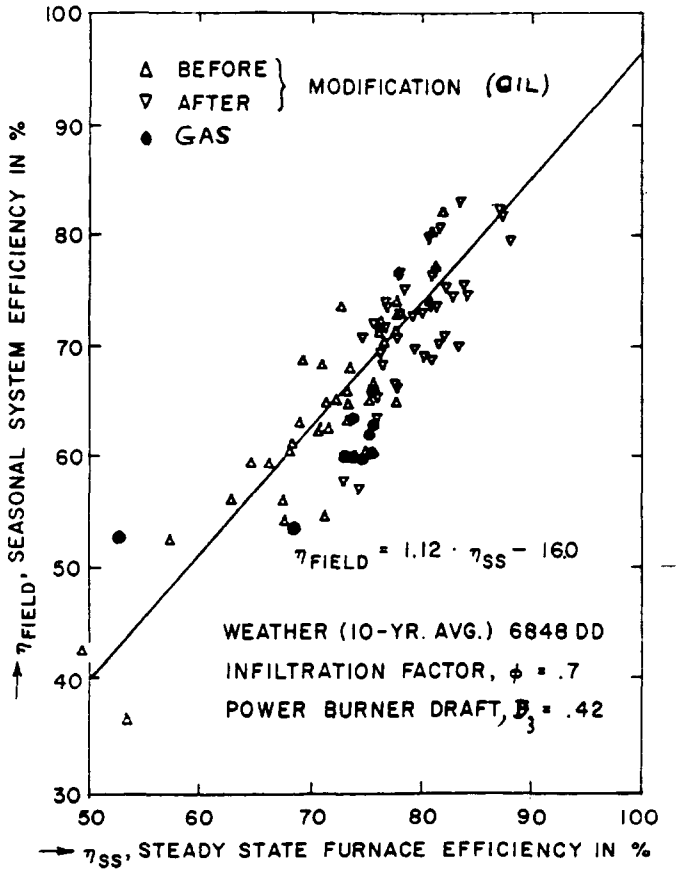

FIG. 9. CORRELATION BETWEEN SEASONAL SYSTEM EFFICIENCY AND STEADY STATE FURNACE EFFICIENCY FOR 41 OIL FIRED HEATING SYSTEMS IN (AIR & WATER) OF THE BOSTON OIL BURNER ANALYSIS PROJECT AND FOR 10 CONVENTIONAL, PILOT-IGNITED GAS-FIRED SYSTEMS

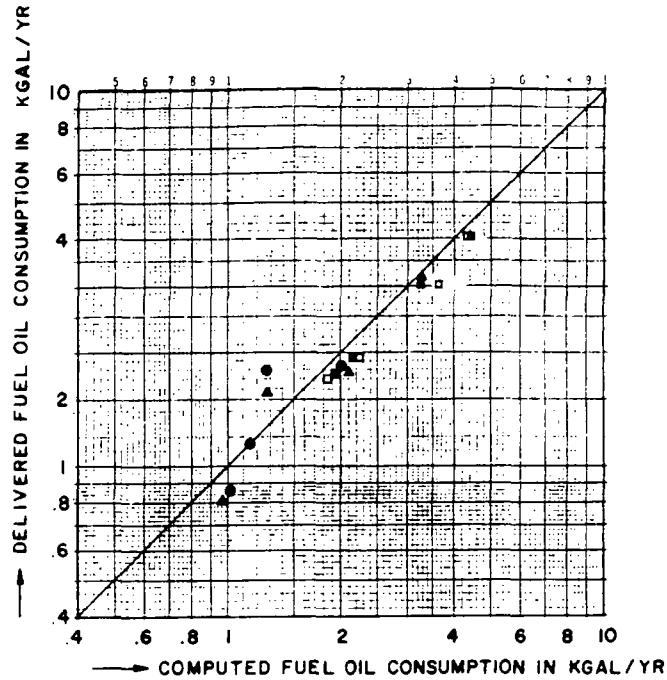

FIG. 10

COMPARISON BETWEEN MEASURED AND COMPUTED ANNUAL FUEL OIL CONSUMPTION IN SEVERAL BOSTON RESIDENCES HEATING SEASONS. ■,□ 74/75; ▲ 73/74; ● 72/73; ○ AFTER REDUCING NOZZLE SIZE. HEATING DEGREE-DAY CORRECTIONS WERE NOT MADE SINCE ALL WERE WITHIN 6870 ± 25 Fd.

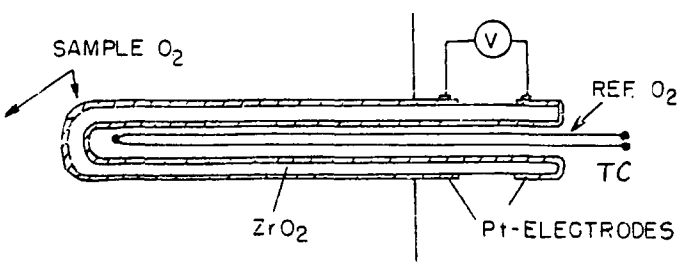

ZrO_2 IS A SOLID STATE CONDUCTOR OF OXYGEN IONS, $O^{=}$

PLATINUM CATALYZES THE REACTION

$$O_2 + 4e^- \rightleftharpoons 2O^{=} \quad \text{CATHODE}$$

$$O_2 + 4e^- \rightleftharpoons 2O^{=} \quad \text{ANODE}$$

THE CELL OUTPUT DEPENDS ON TEMPERATURE AND p_{O_2}, AS DESCRIBED BY THE NERNST EQUATION:

$$V = \frac{RT}{nF} \log \frac{p_{O_2,\ SAMPLE}}{p_{O_2,\ REF.}}$$

FIG. 11. $Zr\ O_2$- ELECTROLYTIC CELL

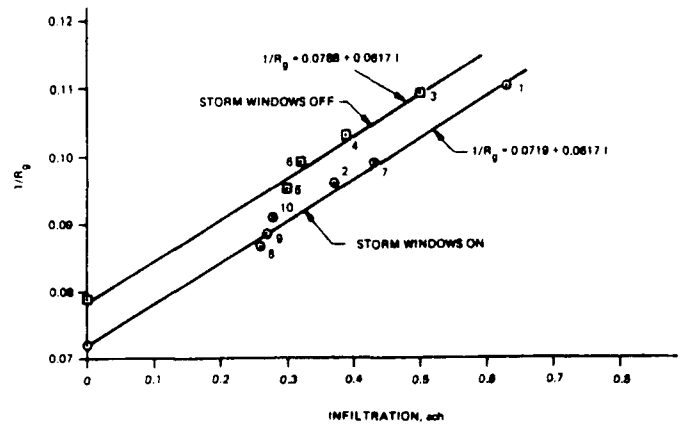

Conductance Versus Infiltration

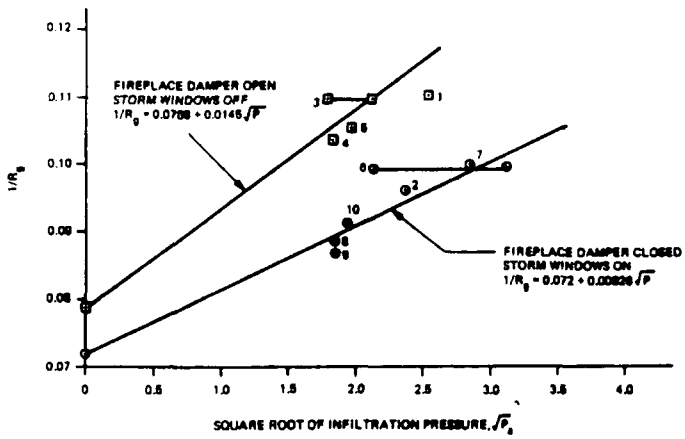

Figure 12. Conductance as a Function of Infiltration Pressure

Table 1. System Savings for Various Retrofit/Improvement Options. HFLAME Analyses (File DFACA2)

	Savings Breakdown in % Points								Net Savings in % Points		Fuel Savings in %.	
	On-Period		Off-Period		Infiltration		Casing					
Retrofit	C(*)	L(*)	C	L	C	L	C	L	D_E=0	D_E=1	D_E=0	D_E=1
Stack Damper	0.10			6.59		3.53		0.00	0.10	10.22	0.16	13.86
Air Derate	1.92		2.87			0.83		0.00	4.79	5.62	7.01	8.13
Stack Baffle	0.04		0.00			2.71		0.00	0.04	2.75	0.06	4.15
Flue Damper	0.17		8.63			0.16		-0.70	8.80	8.86	12.17	12.24
Power Burner	0.26		8.90			5.01		-0.20	9.16	13.97	12.60	18.03
Fuel/Air Derate	2.39		6.43			1.86		0.10	8.82	10.78	12.19	14.51
Heat Extractor		1.74		2.94		-0.13		0.00	0.00	4.55	0.00	6.69
IID	-0.33		2.71			0.15		0.20	2.38	2.73	3.61	4.12
$\Delta\eta_{ss}$=5%	2.70		4.34			0.27		-0.10	7.04	7.21	9.98	10.16

* C for central distribution and L for local distribution

For D_E = 1 the total savings = sum of savings under C and L

For D_E = 0 the total savings = sum of savings under C only.

TABLE 2. AVERAGE FUEL AND COST SAVINGS OBTAINED FOR VARIOUS GROUPS OF SYSTEMS
(Changes in Building Load = ΔB_g, Fuel Comsumption = ΔF_o, Total Operating Cost = $\Delta\$$)

			AVERAGE FUEL SAVINGS			COST SAVINGS*
			Expt.	CALCULATED WITH HFLAME		
PARAMETER CHANGE	TYPE OF SYSTEM	SAMPLE SIZE	10-Day Test $\Delta B_g+\Delta F_o$ %	10-Day Test ΔF_o %	Seasonal ΔF %	Seasonal $\Delta\$$ %
Nozzle Reduction	Conventional Burner	10	13.5	14.6	14.7	11.9
Nozzle Reduction	Flame Retention	8	13.9	12.4	13.1	9.2
Nozzle Reduction	Hot Water	10	15.1	16.0	16.0	12.9
Nozzle Reduction	Warm Air	8	11.9	10.6	11.5	7.9
Nozzle Reduction	No Draft Diverter	4	22.5	19.1	20.2	16.5
Nozzle Reduction	All with Draft Diverter	14	13.7	14.7	14.9	11.4
New Burner + Nozzle Reduction	Hot Water	7	33.2	21.6	22.2	18.9
New Burner + Nozzle Reduction	Warm Air	3	35.1	32.0	31.1	28.8
Nozzle Reduction + Aqua Booster	All	8	13.4	11.7	12.3	9.9
Nozzle Reduction + Combustion Chamber Change	All	3	6.3	0.4	0.0	- 0.2
All Modifications	All	41	16.6	14.5	14.8	12.0
Nozzle Reduction	All	18	14.5	13.6	14.0	10.7
New Burner + Nozzle Reduction	All	10	33.8	24.7	24.9	21.9

*Based on 2.5 $\$/10^6$ Btu (.85 cents/kWh_{th}) and 3.6 cents/kWh_e

Table 3. Field Data Obtained With Balance Point Meter

A. VARIOUS THERMOSTAT SETBACK OPTIONS

T_B	SETBACK			THERM. LOAD		TIME		FURNACE	TEMP.		DATE
						BRNR	TOTAL	CYCLES	RANGE		
F	#	T	h	deg.	min.	min.	min.	-	F		D M Y
197	0	0	0	65	000	3327	5831	526	-20	0	3/2/85
226	1	5	6	64	000	2838	5725	414	-10	10	7/2/85
272	2	5	14	60	000	2215	5606	320	0	20	11/2/85
285	2	5	14	69	000	2432	6422	328	0	20	30/1/85
310	2	10	14	75	000	2436	6988	122	0	20	16/2/85
368	2	15	14	65	000	1778	6999	97	30		5/3/85
453	2	15	14	66	000	952	4583	95	20	40	3/2/85
475	2	15	14	66	000	1396	6634	136	30		1/3/85
578	2	15	14	58	000	1004	5909	110			16/3/85

B. VARIOUS GAS FURNACE RETROFITS

RETROFIT	T_B	INPUT	FLUE/STACK	
			O_2	O_2
	F	kBTU/h	%	%
Pilot	148	98	5	15
DSI	149	98	5	15
Pilot	93	63	10	17
DSI	94	63	10	17
DSI	105	63	2	9
DSI	110	63	2	9
DSI, FIRE PL DAMPER CLOSED	115	63	2	9

Table 5. Combustion Efficiency Field Survey -- Furnaces and Ovens*

Furnace Type	Burner No.	Firing Rate 10^6 Btu/hr	Annual Duty Cycle %	As Tested			Estimated Safe O_2 Controls Points %	Corrected Stack Temp. °F	Efficiency at Control Point %	Fuel Savings %	Annual Fuel Usage 10^9 Btu	Potential Annual Savings $
				Stack Temp. °F	Stack O_2 %	Efficiency %						
Heat Treating	1	0.25	50	1535	9.7	28	2	1750	47	40	1.1	667
	2	0.25	50	1700	7.0	32	2	1800	45	29	1.1	477
	3	0.25	50	1680	6.5	35	2	1750	47	26	1.1	421
	4	0.25	50	1630	7.3	34	2	1730	47	28	1.1	456
Total												2021
Heat Treating	1	0.25	50	1740	3.9	42	2	1770	46	9	1.1	143
	2	0.25	50	1640	7.4	33	2	1770	46	28	1.1	466
	3	0.25	50	1795	4.0	38	2	1850	43	12	1.1	192
	4	0.25	50	1655	7.1	33	2	1770	46	28	1.1	466
Total												1267
Heat Treating	1	0.25	50	1715	5.2	38	2	1790	45	16	1.1	257
	2	0.25	50	1750	4.9	38	2	1800	45	16	1.1	257
	3	0.25	50	1650	3.4	46	2	1700	48	4	1.1	69
	4	0.25	50	1750	4.1	40	2	1790	45	11	1.1	183
Total												766
Heat Treating	1-8	1.0 (Total)	70	1500	5.1 (Ave.)	46	2	1550	52	12	6.1	1056
Total												1056
Salt Bath	1	0.8	90	1050	12	39	2	1050	66	41	6.3	3866
	2	0.8	90	1000	2.0	66	2	1000	66	0	6.3	---
Total												3866
Salt Bath	1	0.5	90	725	6.0	70	2	725	74	5	3.9	316
	2	0.5	90	725	7.2	69	2	725	74	7	3.9	395
Total												711

*All data are for natural gas consumption at cost of $1.50/$10^6$ Btu.

Table 4. Combustion Efficiency Field Survey--Boilers

Site	Boiler	Fuel	Firing Rate 10^6 Btu/h	Annual Duty Cycle %	As Tested			Estimated Safe O_2 Control Point %	Efficiency at Control Point %	Fuel Savings %	Annual Fuel Usage 10^9 Btu	Potential Annual Savings* $
					Stack Temp. °F	O_2 Level %	Efficiency %					
1	1	Gas	27.3	50	360	6	81.5	2	83.5	2.4	120.0	4311
2	1	Gas	7.5	50	400	6	80.5	2	82.5	2.4	32.9	1196
2	2	Gas	2.5	75	385	7.9	80	2	82.5	3.0	16.5	750
2	3	Gas	6.3	40	270	4.2	84.5	2	85.5	1.2	22.1	338
3	1	Gas	2.5	50	385	7.5	79.5	2	83	4.2	11.0	698
3	1	Oil	2.5	50	500	4.5	83.5	3.5	84.5	1.2	11.0	293
4	2	Oil	7.0	50	305	11.5	83	3.5	88	5.7	30.7	4360
4	3	Oil	7.0	50	295	12	83	3.5	88	5.7	30.7	4360
4	7	Oil	10.0	40	370	10	82	3.5	87.5	6.3	35.0	5500
5	1	Gas	7.0	50	265	15	77	2	86.5	11.	30.7	5058
6	1	Gas	9.2	50	390	10	78	2	84	7.1	40.3	4318
7	1	Gas	13.1	50	400	5	81	2	82.5	1.8	57.4	1565
7	2	Gas	13.1	40	350	6.5	82	2	83.5	1.8	45.9	1237
8	1	Gas	6.9	35	320	18.0	66	2	80	17.5	21.2	5565

*Based on $1.50/$10^6$ Btu of natural gas and $2.50/$10^6$ Btu on fuel oil.

Field Testing of Electric Heat Pumps and Gas Furnaces

Darrell Brewster
Lincoln Electric System
Lincoln, Nebraska

Abstract

A method of field testing residential heating systems to determine their seasonal efficiency is presented here. The actual heat loss of a house can be found by determining the energy required by an electric resistance heater to keep the structure at a given temperature when the average outdoor temperature is known. Knowing the input energy required by any other heating system to keep the same structure at the same indoor temperature allows you to determine seasonal efficiency of the system being compared.

The seasonal efficiencies of three gas furnaces and three heat pumps were determined using this methodology and the results are discussed here.

Introduction

The Lincoln Electric System is a municipal electric utility serving the city of Lincoln, Nebraska and the surrounding area. The total area served includes 190 square miles and over 83,000 customers -- 73,000 of whom are residential.

Being owned by the customers we serve, we feel a need to provide our customers with the most accurate, available information about energy usage. We are expected to be a provider of energy information as well as a supplier of electricity and we take this responsibility seriously.

It was because of this responsibility to our customers that we began testing heating systems in the early 1970's. The tests described in this paper include three gas furnaces, two heat pumps with electric supplemental heat, and one heat pump with gas supplemental heat.

Field Monitoring Methodology

During the 1983-84 heating season, we tested three gas furnaces.

Before we began the test, all of the test homes had electric resistance heating elements installed in their furnace plenums. In addition, they had kilowatt-hour meters and magnetic tape recorders installed to measure and record the hour-by-hour energy usage of this electric heating element. The electric heat energy usage, because it is recognized to be 100 percent efficient, then became the baseline from which to measure the efficiency of the gas heating systems. Before beginning the test, all of the gas furnaces were checked by qualified service persons to insure that they were operating properly.

A Rockwell model R-200 gas meter with pulse initiator was installed on each gas furnace. This meter permitted reading gas usage accurately to 10 cubic feet.

Each gas meter was equipped with a pulse initiator that was electrically connected to a Westinghouse WR-34 mag tape recorder. This pulse initiator puts out one data pulse for each cubic foot of gas that goes through the meter. The WR-34 recorder uses four channels on one-fourth inch magnetic tape to record pulses in proportion to time on one channel, pulses in proportion to gas volume on one channel, and pulses in proportion to the kilowatt-hours of energy used by the electric resistance element on another channel.

The data contained on the tape is very useful for monitoring the energy used by the space heating system. The magnetic tapes were usually changed every 14 days with the mode of operation of the system changed each time a tape change was made. That is, the system was operated as an electric furnace for 14 days and then as a gas furnace for 14 days with the alternation continuing throughout the heating season.

A continuous record of hourly ambient dry bulb temperature was compiled from information obtained from the National Weather Service at the Lincoln Municipal Airport.

Analysis of Gas Furnace Test Data

The energy recorded in kWh's (electricity) and CF (gas) was converted to Btu's for energy comparisons by using the following conversion factors:

1 KWh = 3,413 Btu's
1 CF = 1,000 Btu's

The method of analysis for arriving at seasonal efficiencies of the systems is as follows:

1. The energy usage of the electric resistance heating system was recorded over each of the test periods that the system was operated in the electric mode. The average Btu per hour during each of these time periods was determined and plotted against the average outdoor temperature during the same period. A linear regression using the Btu/hour as the dependent variable, and the average temperature as the independent variable, was calculated to provide the best fit line through the points. The slope of this line represents the heat loss of the house using a 100 percent efficient heating system. The temperature at which the line intercepts the abscissa is the point of zero heat flow rate.

2. The gas usage was recorded for the periods of time that the system was operating as a gas furnace. This data was also analyzed using linear regression of Btu/hour versus average temperature.

3. The comparison of the slope of the line obtained from the average electric energy input to the slope of the line obtained from average gas input represents the efficiency of the gas heating system. This is a measure of Btuh per ^{o}F to keep the house at a constant temperature or is equivalent to the output divided by the input of the system.

Individual Gas Furnace Test Site Data

Figure 1 shows data taken from the test of the gas pulse furnace installed in a 1,340 ft^2, one-story house with full basement. The dashed line indicates the warm air space heater gas input heat flow rate regression 38,184-555T. The 38,184 constant is the heat flow rate at 0°F.

A 20 kW electric element was installed in the furnace plenum, and the solid line represents the space heater electric input heat flow regression 35,500-519T.

The energy consumed by the blower motor was not included in either case as it was assumed to be the same in both modes. The ratio of the heat flow coefficients indicates that the electric operation uses 93.5 percent of the input energy required by the gas furnace or that the efficiency of the gas furnace is 509/555 x 100 = 93.5 percent.

Figure 2 shows data taken from the test of a gas-fired recirculating furnace installed in an 850 ft^2, one-story house with a full basement. The dashed line represents the gas input heat flow rate regression 41,785-610T. A 20 kW resistance bank was installed in the furnace plenum, and the solid line represents the electric space heater input heat flow regression 28,460-414T.

This indicates that the gas furnace is operating at a seasonal efficiency of: 414/610 x 100 = 67.8 percent.

Figure 3 is a plot of data taken from the test of the gas-fired warm air furnace installed in a 1,074 ft^2, split foyer house with an 847 ft^2 finished basement. Again, the dashed line represents the gas input heat flow regression 26,498-402.7T. A 15 kW bank of electric resistance heating elements was used for calibrating the heat loss of this house with a resulting regression 15,233-231.5T. Neglecting energy input to the blower motor, the resulting gas furnace efficiency is: 231.5/402.7 x 100 = 57.5 percent.

Summary of Heat Pump Test

During the 1983-84 heating season, the Lincoln Electric System also tested three heat pump systems that were installed in single-family residences in Lincoln, Nebraska. These consisted of two heat pump systems supplemented with electric furnaces and one heat pump supplemented with a gas furnace.

All heat pump systems were checked before and after the tests by the contractors who had installed the equipment initially to insure proper operation.

Heat Pump Test Procedure

Each of the heat pumps was operated in its normal operating mode for two- to three-week intervals and then the resistance heat only was allowed to operate for periods of one to two weeks. This procedure of alternate operation was continued through the entire heating season. The data obtained during resistance heat operation was used as baseline data as it represents 100 percent efficient operation.

The normal mode of operation for the heat pumps that use electric supplemental heat is for the heat pump to operate through the entire outdoor temperature range. The gas-assisted heat pump was thermostatically controlled to shut off at 25°F, below which the entire heating requirement was supplied by the gas furnace. (This is the normal method of operation of gas-assisted heat pumps, although the heat pump cut-off temperature may be set at other outdoor temperatures.)

Energy inputs were continuously recorded during each of the heating modes. The heating modes were changed at intervals of one to three weeks to obtain energy use data for each mode over as much of the entire outdoor temperature range as possible.

The following data was measured and recorded during the test:

1. Gas Furnace -- CF (Cubic Feet) gas input to the furnace.

2. Electric supplemental -- kWh input to the resistance elements.

3. Heat pump system -- kWh input to the heat pump compressor and outdoor fan.

This information was recorded continuously and a printout was prepared showing Btu's consumed for each 30 minutes.

Analysis of Heat Pump Test Data

As in the gas furnace tests, energy readings were converted to Btu's for energy comparisons by using the following conversion factors:

1 kWh = 3,413 Btu's
1 CF = 1,000 Btu's

The method of arriving at seasonal efficiencies of the various modes is as follows:

1. For each period of time that the resistance heat was operated, an average Btu per hour was determined by dividing total Btu's recorded by total hours in the time period. The average Lincoln outdoor temperature for the same period of time was available from the National Weather Service. A linear regression was then completed using Btu per hour as the dependent variable and average outdoor temperature as the independent variable. The slope of the line obtained from the linear regression is the heat flow rate coefficient and is in units of Btuh per °F. the point at which this line crosses the X axis is the point of zero heat flow rate.

2. For each period of time that the heat pump system was operated, an average Btu per hour figure for the heat pump plus supplemental heat was arrived at. These numbers were plotted against average temperature using cubic regression to obtain the best fit curve through the points.

3. The seasonal performance factor (SPF), which is equivalent to the seasonal efficiency, was arrived at by use of the bin method which adjusts the data to 20-year average weather conditions in Lincoln. The bin method utilized Lincoln's average number of hours of occurrence within each set of five-degree outdoor temperatures, called "bins." There are 15 "bins" between 65° and -20°F; for instance, (60-64), (55-59), etc.

   The average Btuh from the plotted resistance heat line was multipled by the number of hours of occurrence in each bin to obtain the annual Btu's input to the resistance heater. To obtain the annual Btu usage of the heat pump system, including supplemental heat, the charted Btuh opposite the outdoor temperature corresponding to the midpoint temperature of each bin was multiplied by the number of hours of occurrence of each bin and totaled. The ratio of the adjusted annual heat pump system energy input, including supplemental heat to the resistance heat input, is the SPF or annual heat pump system efficiency.

Individual Heat Pump Test Site Data

Figure 4 shows data taken from System A, a high efficiency heat pump installed in a 1,106 ft^2, one-story house with full basement. The solid line indicates the space heater electric input heat flow regression

13,574-224T. The 13,574 is the heat flow rate (Btu/hour) at $0^{o}F$. The curved line on Figure 5 shows the input to the heat pump. From this curve, data was taken that was used to complete Table 1. The ratio of electric resistance energy input to heat pump energy input is the efficiency of the heat pump system. The seasonal performance factor of this heat pump is 1.9.

Figure 6 shows data taken from System B, another high efficiency heat pump installed in a two-story frame house with unfinished basement. The first floor of the house has 2,052 ft^2, the second floor has 875 ft^2, and the basement has 1,393 ft^2. The numerical value for the linear regression line shown in Figure 6 is 31,180-471T. The curved line in Figure 7 represents the heat pump energy input for the same house. Again, taking the Btu per hour at various temperatures from the curve and putting them into temperature bins, the performance of the heat pump can be analyzed. The seasonal performance factor of this heat pump as calculated in Table 2 is 2.1.

Figure 8 shows data taken from System C, the gas-assisted heat pump, installed in a 1,074 ft^2 split foyer with an 847 ft^2 finished basement. The numerical value for the linear regression line representing electric resistance heat is 15,266-232T. The combination heat pump and gas supplemental heat usage is shown by the heat pump curve, Figure 9, with the resultant analysis yielding a seasonal performance factor of 1.03, as calculated in Table 3.

While the methodology employed to arrive at the heat pump efficiencies is not as precise as that used in the gas furnace analysis, we believe the numbers to be accurate.

For all of the tests conducted we also analyzed the numbers using the Btu/degree day method, adjusted to represent a normalized weather year and, in all cases, the efficiencies obtained were very close for both methods.

Conclusions

Results of the 1983-84 field tests suggest that for all systems, except the pulse combustion furnace, actual seasonal efficiencies were 10 to 20 percent lower than rated.

We are continuing to field test heating systems and have just completed analysis of the data gathered during the 1984-85 tests. The results of these tests again point out that actual operating efficiencies will probably be lower for all types of equipment than the manufacturers' ratings suggest.

LINCOLN ELECTRIC SYSTEM

HEATING EFFICIENCY STUDY
GAS HEAT VS. ELECTRIC RESISTANCE
BTU PER HOUR VS TEMPERATURE FOR
ERNIE BOURKE
FIG. 1

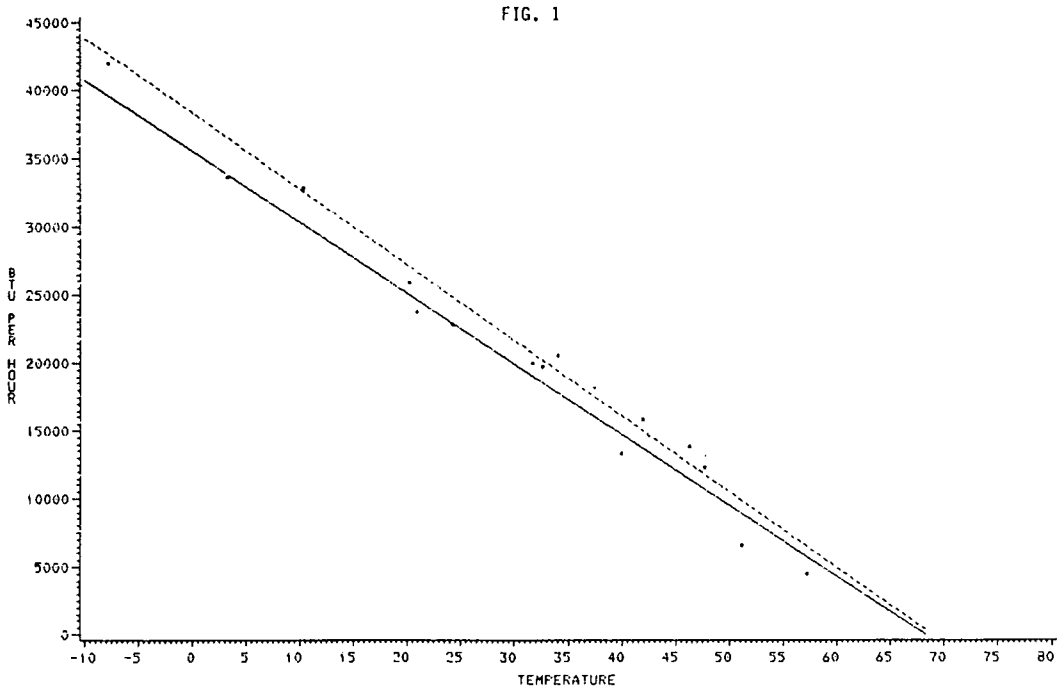

LEGEND: GAS -------- ELECTRIC _____

LINCOLN ELECTRIC SYSTEM

HEATING EFFICIENCY STUDY
GAS HEAT VS. ELECTRIC RESISTANCE
BTU PER HOUR VS TEMPERATURE FOR
JAMES HAHN
FIG. 2

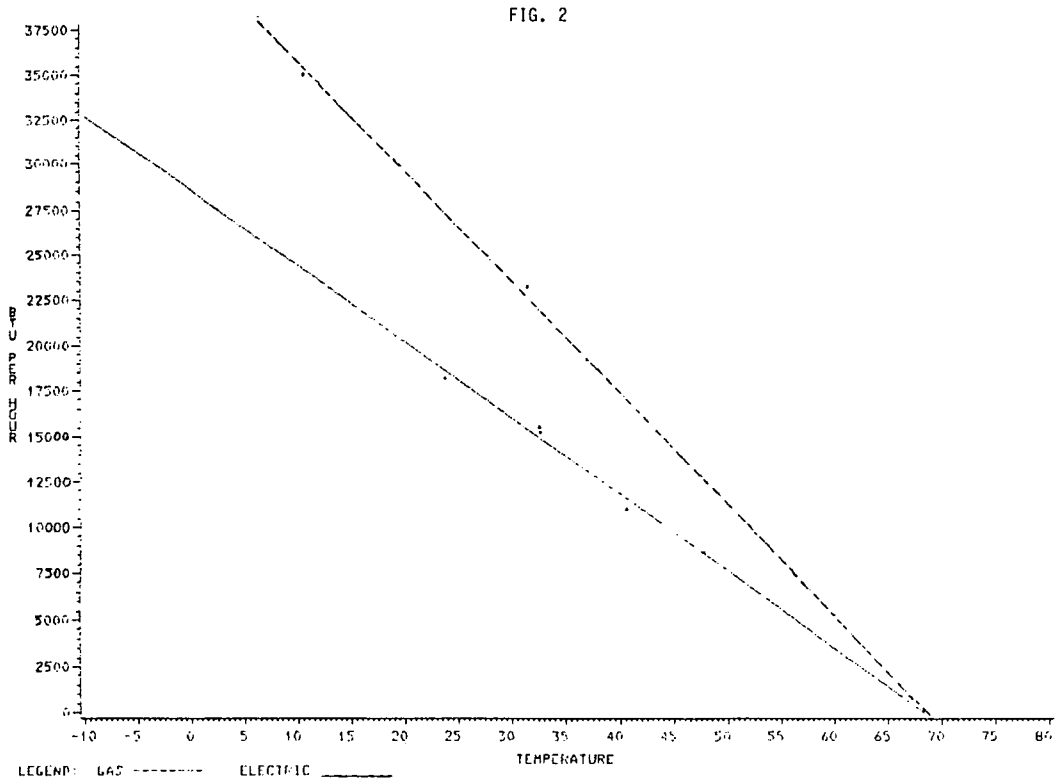

LEGEND: GAS -------- ELECTRIC _____

LINCOLN ELECTRIC SYSTEM

HEATING EFFICIENCY STUDY
GAS HEAT VS. ELECTRIC RESISTANCE
BTU PER HOUR VS TEMPERATURE FOR
STEVE LARKINS
FIG. 3

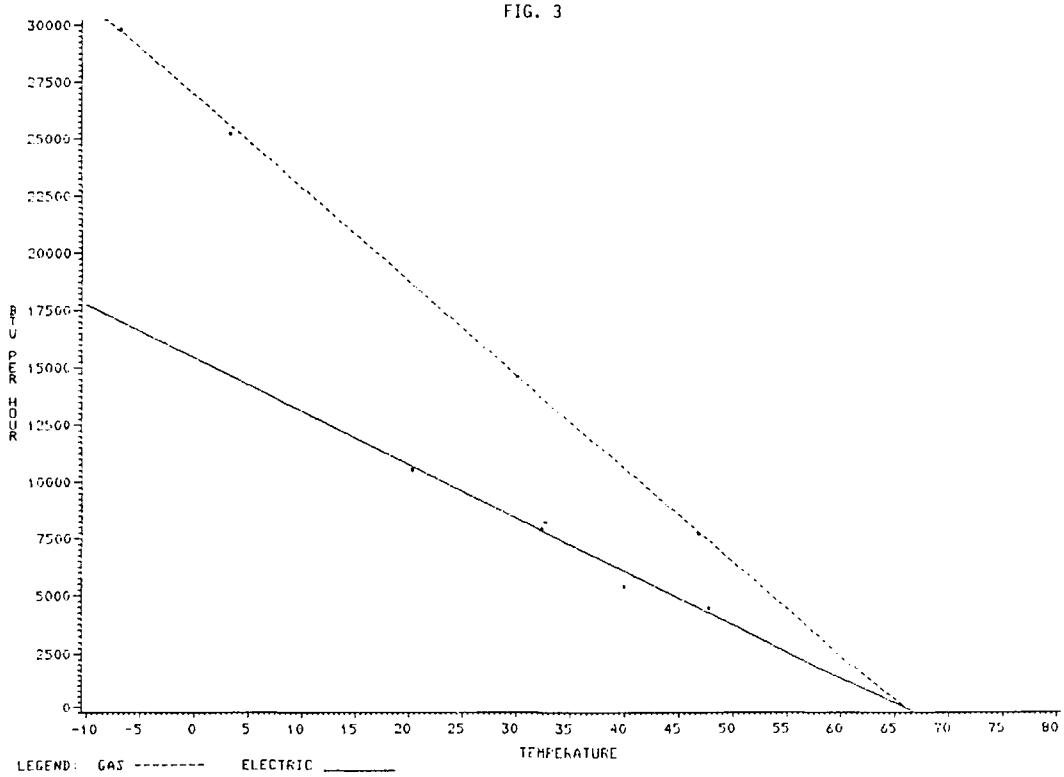

LINCOLN ELECTRIC SYSTEM

HEATING EFFICIENCY STUDY
RESISTANCE HEAT
BTU PER HOUR VS TEMPERATURE FOR
GARY UNRUH
Figure 4
ELECTRIC FURNACE

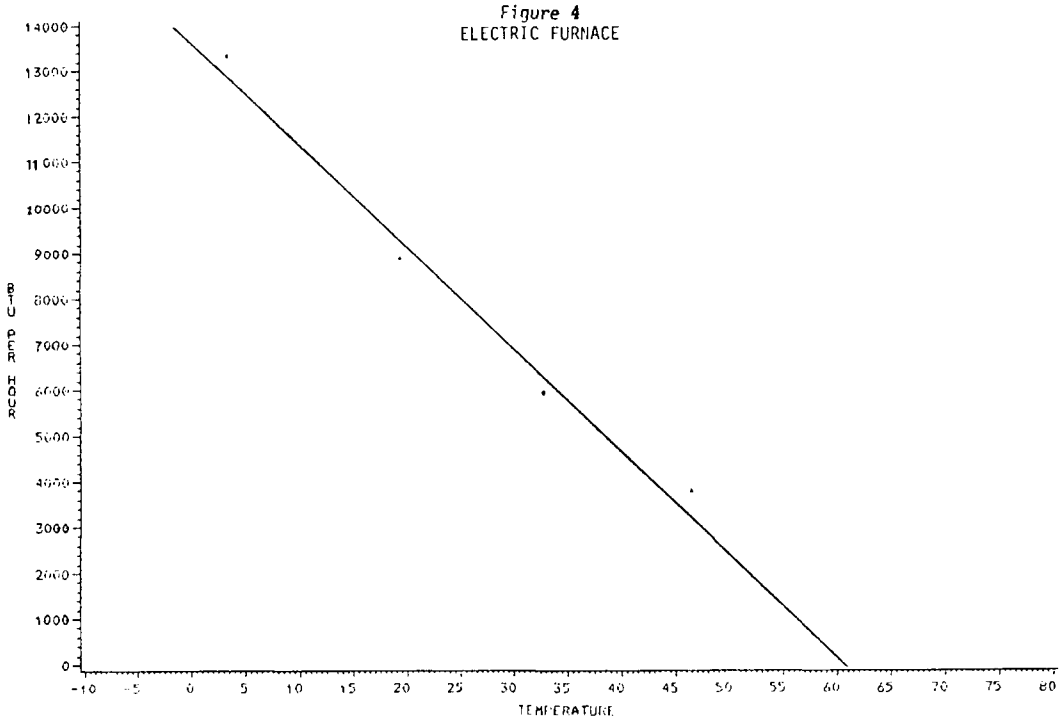

LINCOLN ELECTRIC SYSTEM

HEATING EFFICIENCY STUDY

GARY UNRUH

BTU PER HOUR VS TEMPERATURE FOR

HEAT PUMP

Figure 5

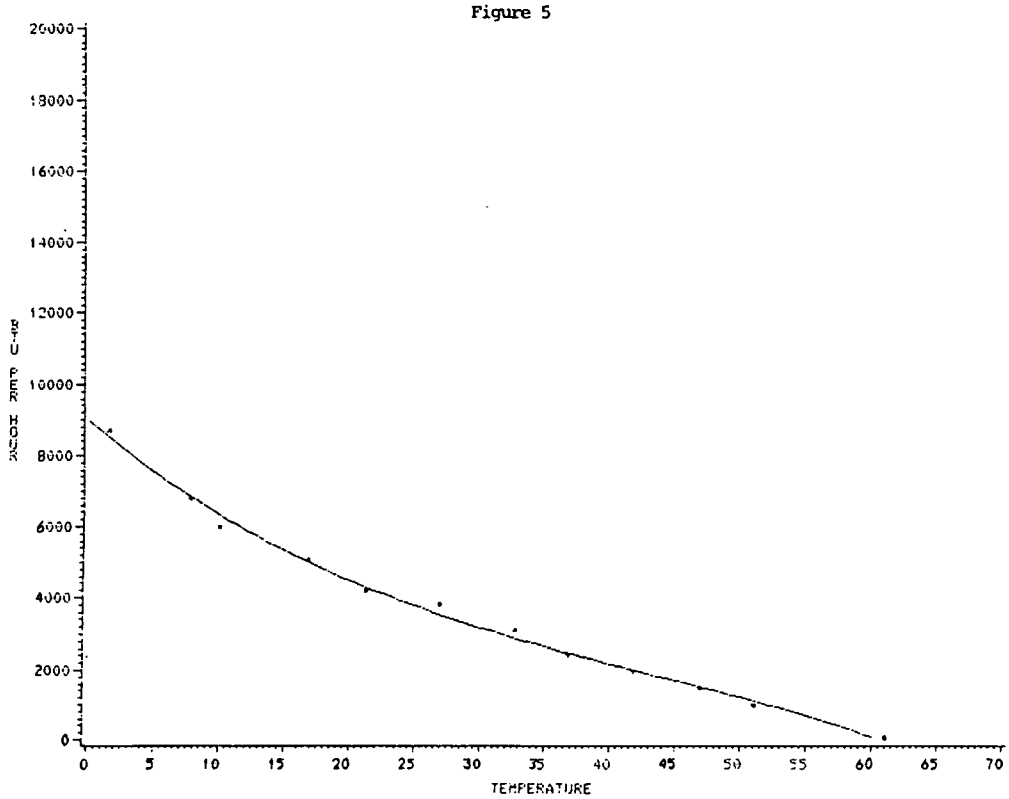

TABLE 1

Heat Pump

outdoor Temp	Temp Below 60°F	Hours of Occur	Building Heat Loss	Electric Resistance heat input (Btu)		Heat Pump System input (Btu)	
				Hourly	Seasonal	Hourly	Seasonal
60-64	0	445					
55-59	3	478	224 Btuh/°F	672	321,216	300	143,400
50-54	8	509	224 Btuh/°F	1792	912,128	1000	509,000
45-49	13	525	224 Btuh/°F	2912	1,528,800	1700	892,500
40-44	18	547	224 Btuh/°F	4032	2,205,504	2100	1,148,700
35-39	23	642	224 Btuh/°F	5152	3,307,584	2600	1,669,200
30-34	28	675	224 Btuh/°F	6272	4,233,600	2950	1,991,250
25-29	33	528	224 Btuh/°F	7392	3,902,976	3500	1,848,000
20-24	38	397	224 Btuh/°F	8512	3,379,264	4000	1,588,000
15-19	43	278	224 Btuh/°F	9632	2,677,696	4800	1,334,400
10-14	48	189	224 Btuh/°F	10752	2,032,128	5700	1,077,300
5-9	53	149	224 Btuh/°F	11872	1,768,928	7000	1,043,000
0-4	58	88	224 Btuh/°F	12992	1,143,296	8500	748,000
-5 to -1	63	35	224 Btuh/°F	14112	493,920	10,300	360,500
below -5	68	13	224 Btuh/°F	15232	198,016	12,600	163,800
Total Btu					28,204,736		14,517,050
Seasonal Performance Factor						1.94	

LINCOLN ELECTRIC SYSTEM

HEATING EFFICIENCY STUDY
RESISTANCE HEAT
BTU PER HOUR VS TEMPERATURE FOR
GAYLE HANSHAW
Figure 6
ELECTRIC FURNACE

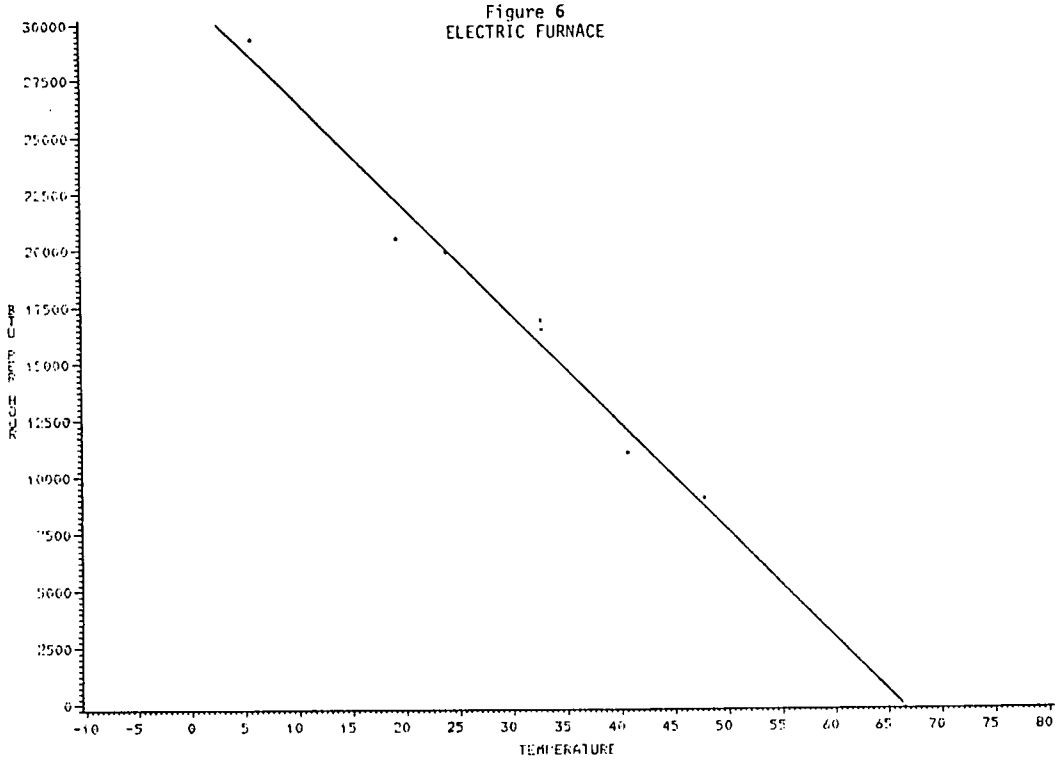

LINCOLN ELECTRIC SYSTEM

HEATING EFFICIENCY STUDY
GAYLE HANSHAW
BTU PER HOUR VS TEMPERATURE FOR
HEAT PUMP
Figure 7

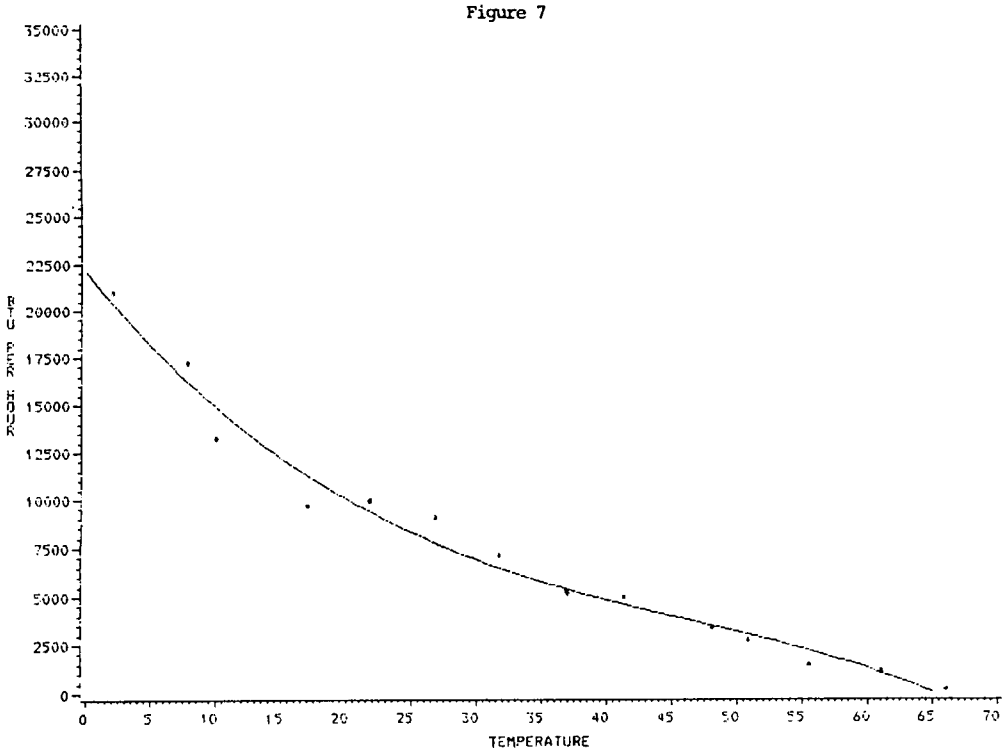

TABLE 2

Heat Pump

outdoor Temp	Temp Below 65°F	Hours of Occur	Building Heat Loss	Electric Resistance heat input (Btu)		Heat Pump System input (Btu)	
				Hourly	Seasonal	Hourly	Seasonal
60-64	3	445	471 Btuh/°F	1413	628,785	700	311,500
55-59	8	478	471 Btuh/°F	3768	1,801,104	2000	956,000
50-54	13	509	471 Btuh/°F	6123	3,116,607	2700	1,374,300
45-49	18	525	471 Btuh/°F	8478	4,450,950	3500	1,837,500
40-44	23	547	471 Btuh/°F	10833	5,925,651	4400	2,406,800
35-39	28	642	471 Btuh/°F	13188	8,466,696	5300	3,402,600
30-34	33	675	471 Btuh/°F	15543	10,491,525	6400	4,320,000
25-29	38	528	471 Btuh/°F	17898	9,450,144	7600	4,012,800
20-24	43	397	471 Btuh/°F	20253	8,040,441	9400	3,731,800
15-19	48	278	471 Btuh/°F	22608	6,285,024	11400	3,169,200
10-14	53	189	471 Btuh/°F	24963	4,718,007	13750	2,598,750
5-9	58	149	471 Btuh/°F	27318	4,070,382	16750	2,495,750
0-4	63	88	471 Btuh/°F	29673	2,611,224	20300	1,786,400
-5 to -1	68	35	471 Btuh/°F	32028	1,120,980	24500	857,500
below -5	73	13	471 Btuh/°F	34383	446,979	29500	383,500
Total Btu					71,624,499		33,644,400
Seasonal Performance Factor						2.13	

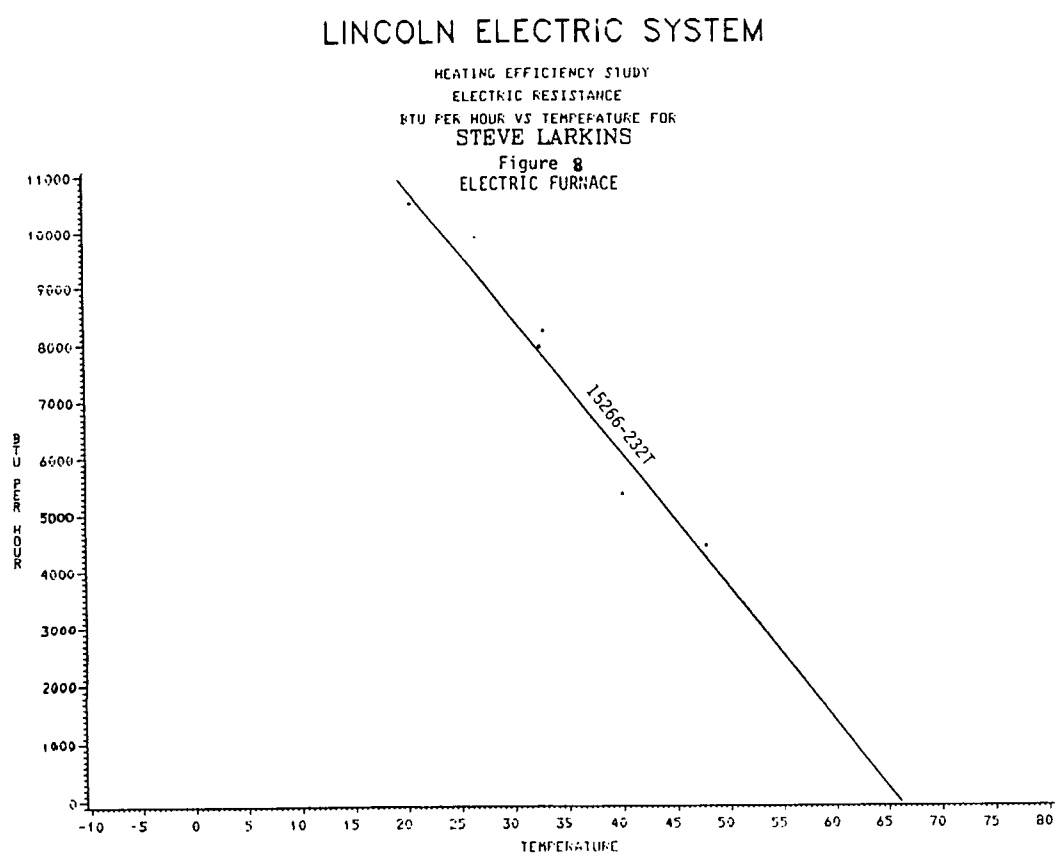

LINCOLN ELECTRIC SYSTEM

HEATING EFFICIENCY STUDY

STEVE LARKINS

BTU PER HOUR VS TEMPERATURE FOR

HEAT PUMP

Figure 9

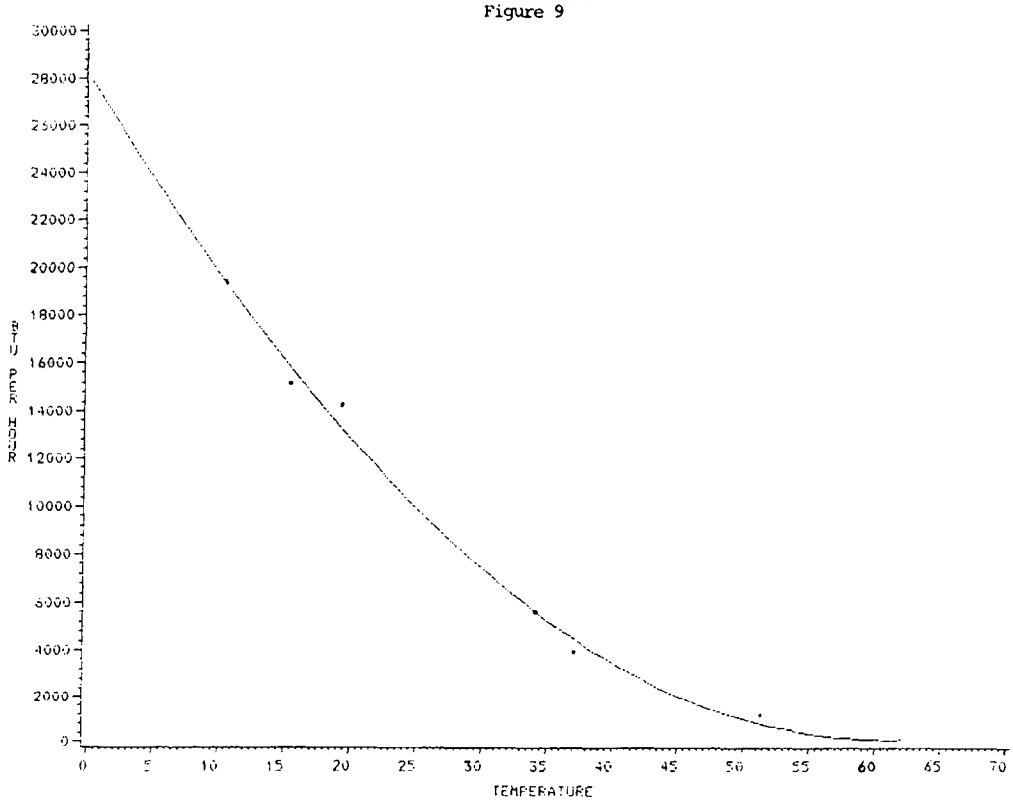

TABLE 3

Gas-Assisted Heat Pump

outdoor Temp	Temp Below 65°F	Hours of Occur	Building Heat Loss	Electric Resistance heat input (Btu)		Heat Pump System input (Btu)	
				Hourly	Seasonal	Hourly	Seasonal
60-64	3	445	232 Btuh/°F	696	309,720	300	133,500
55-59	8	478	232 Btuh/°F	1856	887,168	400	191,200
50-54	13	509	232 Btuh/°F	3016	1,535,144	700	356,300
45-49	18	525	232 Btuh/°F	4176	2,192,400	1600	840,000
40-44	23	547	232 Btuh/°F	5336	2,918,792	2850	1,558,950
35-39	28	642	232 Btuh/°F	6496	4,170,432	4500	2,889,000
30-34	33	675	232 Btuh/°F	7656	5,167,800	6500	4,387,500
25-29	38	528	232 Btuh/°F	8816	4,654,848	8900	4,699,200
20-24	43	397	232 Btuh/°F	9976	3,960,472	11700	4,644,900
15-19	48	278	232 Btuh/°F	11136	3,095,808	14800	4,114,400
10-14	53	189	232 Btuh/°F	12296	2,323,944	18200	3,439,800
5-9	58	149	232 Btuh/°F	13456	2,004,944	21670	3,228,830
0-4	63	88	232 Btuh/°F	14616	1,286,208	25700	2,261,600
-5 to -1	68	35	232 Btuh/°F	15776	552,160	27700	969,500
below -5	73	13	232 Btuh/°F	16936	220,168	29720	386,360
Total Btu					35,280,008		34,101,040
Seasonal Performance Factor						1.03	

Obtaining Building Energy Data — Problems and Solutions

David T. Harrje
Center for Energy and Environmental Studies
Princeton University
Princeton, New Jersey

Abstract

Since the early 1970's Princeton University researchers have been involved with obtaining field data on energy use in buildings. Data acquisition systems have used modified utility data recording systems, mechanical and electrical recording approaches, and on-site instrument packages of a variety of sizes. The buildings have ranged from single family to large multi-family complexes and more recently have involved commercial facilities. Instrumentation approaches have progressed throughout this period so that new challenges could be met. The era of the microcomputer has greatly aided our flexibility, as well as assisting in the problem of field data analysis. This paper briefly reviews past instrumentation solutions we have evaluated. The paper will provide examples of recent data obtained from power line carrier systems, reporting through a microcomputer. Problems and solutions related to these field experiences both past and present will be emphasized.

Introduction

Each building energy analysis project involves new challenges with regard to the choice of instrumentation and monitoring approaches. As outlined in Reference 1, the first step is the design of the experiment, itself. What information is required and how can it be obtained most easily, within the required level of accuracy. Princeton University Center for Energy and Environmental Studies has had the opportunity to be deeply involved in building energy monitoring and analysis in a wide variety of buildings since the early 70's. This paper will briefly review those experiences which have led to our current monitoring equipment developments and approaches.

History of Monitoring at CEES

A prime concern from the onset of our research in 1972 was that besides the important building envelope considerations in energy use, occupant activities and the way the occupants operated their dwellings and the equipment inside was a vital part of analyzing the energy use. Therefore, throughout the past 13 years our emphasis has been on instrumenting and monitoring occupied dwellings.

The initial instrumentation and monitoring experience was at Twin Rivers, N.J., a planned unit development that began construction at the start of the 70's decade.[2,3]

Single family houses were first tested at Twin Rivers in a very superficial way using meter readings and internal temperature information. Modeling was attempted but clearly one of the big unknowns was air infiltration. This realization that there were many missing facts set the tone for our first major monitoring effort.

Townhouses were chosen for this major project based upon the ability to choose identical plan forms and even the same orientations. The initial three homes in a row allowed a single monitoring system, a 200 channel data acquisition system, to monitor the three townhouses simultaneously, providing a single record of more than 60 channels of data from each. These were nicknamed HIT homes (highly instrumented townhouses). This project, described in References 2 and 3, had as its goal the complete understanding of where the energy use was taking place in the homes. This meant temperature measurements in every room, information on door and window openings, a breakdown of electrical use and required that all major energy use items were monitored separately (energy disaggregation).

Even 60 + channels proved insufficient, and additional monitoring equipment proved necessary, Automated Air Infiltration Units, (AAIUs) monitored the detailed variations in air exchange rates.[1,4] A weather station located on the top of the Twin Rivers' bank provided all the necessary information on the changing outside environment. Higher speed recording equipment was moved from townhouse-to-townhouse investigating transient effects associated with the warm air heating systems, appliances, and the detailed thermal behavior in the attic. These auxiliary studies were part of a cooperative effort with Dr. Richard Grot at the National Bureau of Standards.

The records from the principal monitoring devices were collected on magnetic tape at our CEES lab, 15 miles away, after dedicated phone line transmission in real time, from the three houses every 20 minutes and the weather station once per hour. In addition there were the magnetic tapes that resulted from the transient measurements, and initially paper chart recordings, and later magnetic tape cassette data from the AAIUs.

Retrofitted townhouses were the next challenge. More than 30 homes required a high degree of instrumentation to document the expected energy savings through a series of retrofits. The approach was to use the WR4C system, a device popular with utility companies, modified to provide 12 channels of data. The name given to this instrumentation/monitoring approach was the Omnibus Package. The WR4C is one of a series of electrical utility demand meter recorders. The 4C stands for four channels, where the data recording is in the form of a series of pulses. [2,5] The modification was to switch channels to a new set of sensors every 15 minutes. Carefully choosing key parameters from the data obtained in the 60-channel HIT homes provided the data acquisition choices shown in Table 1.

Backing up these data were a series of daily meter readings by a Twin Rivers housewife hired for the task. Such backup arrangements cannot be over emphasized.

Four older homes were monitored by a similar instrumentation arrangement, this time using two Omnibus Packages side-by-side to achieve 24 channel monitoring, since additional detail was deemed necessary.[6]

Ten heat pump homes were also monitored by CEES personnel using the Omnibus Package working as a team with Public Service Electric and Gas personnel who used additional WR4C-type systems to monitor the electrical use in those homes.[7,8] Figure 1 illustrates the kind of detailed information available from such heat-pump home monitoring.

Computer-based monitoring was the next development at the Center. Use of inexpensive but highly flexible computers allowed monitoring systems to be built that were useful in field studies and in the laboratory. This approach is applied in our instrument calibration, remote housing monitoring,[9] and multifamily building monitoring (References 11,12). The systems range from highly portable assemblies of microcomputer and sensors to elaborate instrumentation configurations.

PLC and the microcomputer is a combination of the benefits of the powerline carrier (PLC) based system with the microcomputer-modem (See References 10 and 13 and Figure 2). One calls the computer from any remote location to obtain instantaneous data or daily/hourly summaries. We are currently monitoring two multifamily apartment buildings (60 apartment size) from 15 and 45 miles away. Typical data of the temperature history within one of the buildings is shown in Figure 3.

New developments in air infiltration monitoring have also taken place over the past few years, also based upon the microcomputer. The constant concentration tracer-gas system (CCTG) now allows us to measure 10 zones simultaneously for air exchange of outside air. The schematic of the CCTG system is shown in Figure 4. This method of obtaining air exchange data for multiple zones, such as that illustrated in Figure 5, compares to the AAIU decay method which is limited to one or two zone measurements. Additional information on such systems can be found in References 14, to 18. The use of passive approaches such as the perfluorocarbon tracers should also be of great interest to the building monitoring community and references such as 19 and 20 should be consulted.

Detail and Approach

Before discussing individual problems and solutions, one of the first challenges associated with monitoring and instrumenting buildings (as already briefly stated) is to appropriately design the level of the overall effort. Once the critical parameters are known, a limited survey may be all that is required. However, prior to gaining those insights, a major effort evaluating a number of possible key parameters may be needed. Our Twin Rivers experiences pointed out just how detailed the analysis must be to understand all the energy-related events that are taking place.[2,3]

At the other extreme is the Princeton House Doctor Approach, where a carefully chosen array of instruments is brought to the building for short-term measurements to identify where energy is being used in excess. For example, blower door pressurization measurements to evaluate building envelope tightness, infrared

scanning to evaluate insulation levels and inadequacies, combustion performance measurements to evaluate furnace and boiler operation, detailed temperature measurements to evaluate space temperature and domestic hot water controls, etc.[21-27]

The solutions to the monitoring challenge are highly dependent on new developments in both sensor technology and data acquisition system developments. The later has been dramatically changed by new developments in microcomputers. Advances in sensor capabilities and technologies such as infrared scanning have also greatly improved our diagnostic capabilities.

One of the problems that can't be overstressed is the need to evaluate just how much data is needed and how one can assure the data accuracy.[28] Too much data not only is a waste of resources, but often results in the situation of "not seeing the forest for the trees". The microcomputer can be a great ally in processing the data, providing hourly values in meaningful units (not counts per hour but KWh, etc.) which immediately trigger a response from the monitoring personnel (reasonable, ridiculous or maybe questionable). Filling drawers with data printout or reels of magnetic tape without constantly checking that reasonable values of the key parameters are being collected is a common problem and must be avoided. Keep the program goals constantly in mind.

Problems and Solutions

Outlined next is a series of problems we have faced over the years with our solutions. By no means are these the only solutions. Nor are the problems cited meant to be all inclusive. Every project involving building instrumentation and monitoring will have problems of its own and hopefully solutions to match!

- Problem: Instrumenting the occupied home or building in a way so that sensor integrity can be preserved and decor in the home will not be compromised. Solution: Move the sensors to the least obtrusive locations and keep exposed wiring (low voltage from a safety standpoint) to a minimum. Examples are temperature sensors above doorways out of the reach of children, but at a uniform height for room-to-room comparisons; thermostat sensing buried within the thermostat; door and window sensors resembling those systems used for burglar alarm sensors and wiring; wires run through warm air duct systems; wires of the small diameter two wire audio type, transparent to blend with the decor, etc.

- Problem: Establish a weather station that represents local conditions while maintaining instrument security and blending into the neighborhood. Solution: Choose a commercial building roof top with access only from within the building. We choose a bank and all instrumentation was hidden and safe from teenage rock throwers (concern was for expensive glass-covered solar sensors) and even the wind measurement tower looked like a weather vane.

- Problem: How to maintain a close vigilance on data collection without excessive man power usage. Solution: Move away from recording solutions that have long time delays between recording and analysis. As noted in the text, microcomputer technology is especially suitable to achieving this goal. The following example points out the additional problems that can result using other approaches. Use of methods such as the WR4C magnetic tape recorder that provides pulsed data taken over a month's time requires that cross-checks from meter readings are mandatory. The conversion from pulsed data to engineering data is another step that can mean several weeks before the actual engineering analysis is made. This means that six weeks may have passed before one is aware of a sensor failure. Today's solution with microcomputers means that the engineering data are immediately available. Even if the site is remote one can call up the system as often as needed during critical periods in a testing program.

The need to evaluate the program goals down to the detail of individual data plots is one way to avoid overlooking critical measurement and data collection needs. Use of the microcomputer to constantly update information or even to prepare the plots "in situ" are today's options.

- Problem: Make certain all measurements taken in the field are of the required accuracy. Solution: Do not believe the manufacture's specifications without performing routine laboratory checks. Set up the monitoring equipment in the lab and check out flow meters, temperature sensors, humidity probes, etc. It may take a little longer but it is well worth the effort to discover the problem before all the data has been gathered.

- Problem: How does one make certain the occupant and/or manager will be cooperative in the test program. Solution: Communicate with the occupant throughout the program. Lack of knowledge is one sure way to incur additional problems. Armed with a reasonable understanding of what is taking place, the occupant and/or manager can provide great help in keeping you aware of changing events at the test site. Take extra care in system installation showing you respect their home or building.

Conclusions

The monitoring and instrumentation of buildings, especially occupied buildings, is a challenge and an opportunity to gain insight as to what energy-related events are really taking place. Using a well-thoughtout experimental plan, appropriate monitoring and instrumentation choices and a constant surveillance of what is taking place in the building, as well as constantly evaluating the reasonableness of the measurements, a high probability of success is assured. Approaching the challenge with a recognition of the importance of the occupants, and with an awareness of all the things that can go wrong, also increases the probability of success. The history of monitoring at CEES has been presented as representing a range of monitoring/instrumentation challenges and a variety of possible problems and typical solutions that may be applied. Hopefully, these experiences will help you in your monitoring/instrumentation efforts.

Acknowledgements

The author wishes to acknowledge the support of the United States Department of Energy, Building Systems, Conservation and Renewable Energy, who have supported this research under contract No. DE-AC02-77 CS20062 in the past and under grant No. DE-FG01-85CE24422 at present.

References

1. Guiding Principles Concerning Design of Experiments, Instrumentation and Measuring Techniques, (Eds. Fracastoro, G.V. and Lyberg, M.D.), Swedish Council for Building Research, Document D11:1983, Stockholm, Sweden.

2. Saving Energy in the Home, (Ed. Socolow, R.H.), Ballinger Publishing Co. Cambridge, MA, 1978, also Energy and Buildings - Special Princeton Issue, Vol. 1, No. 1, 1978.

3. Harrje, D.T., Socolow, R.H. and Sonderegger, R.C., "Residential Energy Conservation - The Twin Rivers Project," ASHRAE Transactions, Vol. 83, Pt. 1, 1977, pp. 458-477.

4. Harrje, D.T., Hunt, C.M., Treado, S.J. and Malik, N.J., "Automated Instrumentation for Building Air Infiltration Measurements," Princeton University Center for Energy and Environmental Studies, Report No. 13, 1975.

5. Hall, S.A. and Harrje, D.T., "Instrumentation for the Omnibus Experiment in Home Energy Conservation," Princeton University Center for Environmental Studies Report No. 21, 1975.

6. Harrje, D.T., Dutt, G.S., Socolow, R.H., Gadsby, K.J. and Linteris, G.T., "Beyond Twin Rivers: Energy Analysis and the House Doctor," presented at Opening and Closing the Envelope Energy Retrofit Conference, sponsored by the Mid-Atlantic Solar Energy Association, Princeton, N.J., June 1980. Published as Home Remedies, MASEA, Philadelphia, 1981.

7. Harrje, D.T., "Heat Pump Performance Measured Using Ten Residential Units Operating in the Northeastern United States," Proceedings of the International Conference and Energy Use Management, (Eds. Fazzolare and Smith), Pergamon Press, New York, 1977, Vol. I, pp. 447-456.

8. Harrje, D.T., "Heat Pump Performance as Measured in Ten Residential Dwellings," Princeton University Center for Energy and Environmental Studies, Report No. 82, 1978.

9. Harrje, D.T. and Cerceo, J.A., "Recommended Retrofit Actions Based Upon Air Infiltration Evaluations in a Variety of Buildings," 4th AIC Conference - Air Infiltration Reduction in Existing Buildings, Air Infiltration Centre Bracknell, Berkshire Great Britain, 1983, pp. 2.1-2.11.

10. Harrje, D.T., Kirkpatrick, D.L., Norford, L.K. and Seroussi, R.E., "Data Collection and Analysis Hardware for Measuring Building Energy Use," ACEEE 1984 Summer Study on Energy Efficient Buildings, Vol. C, New and Existing Multi-Family Residences and Monitoring Systems, ACEEE, Washington, DC, August 1984, pp. 177-192.

11. DeCicco, J.M., Dutt, G.M., and Harrje, D.T., "Energy Scorekeeping for a Multifamily Building: A Study of Lumley Homes," ACEEE 1984 Summer Study on Energy Efficient Buildings, Vol. C, New and Existing Multifamily Residences and Monitoring Systems, ACEEE, Washington, DC, August 1984, pp. 108-121.

12. DeCicco, J.M., Dutt, G.S., Harrje, D.T. and Socolow, R.H., "PRISM Applied to a Multifamily Building: The Lumley Homes Case Study," Princeton University Center for Energy and Environmental Studies, Report No. 201, 1985.

13. Harrje, D.T., DeCicco, J.M. and Kirkpatrick, D.L., "Optimizing Building Control Strategies Using Short-Term Energy and Comfort Monitoring," Clima 2000, VVS Kongres - VVS Messe, Copenhagen 1985, pp. 7-12.

14. Harrje, D.T., Grot, R.A. and Grimsrud, D.T., "Air Infiltration -- Site Measurement Techniques," 2nd AIC Conference - Building Design for Minimum Air Infiltration, AIC, Great Britain, Document AIC-PRO-2-81, 1981, pp. 113-133.

15. Liddament, M. and Thompson, C., Techniques and Instrumentation for the Measurement of Air Infiltration in Buildings - A Brief Review and Annotated Bibliography, Air Infiltration Centre Document, AIC-TN-10-83, 1983.

16. Harrje, D.T., Dutt, G.S., Bohac, D.L. and Gadsby, K.J., "Documenting Air Movements and Air Infiltration in Multicell Buildings Using Various Tracer Techniques", ASHRAE Transactions, Vol. 91, Pt. 2, 1985.

17. Harrje, D.T., Bohac, D.L. and Nagda, N.L., "Air Exchange Rates Based Upon Individual Room and Single Cell Measurements," 6th AIC Conference - Ventilation Strategies and Measurement Techniques, AIC, Great Britain, DOC AIC-PRO-85, 1985.

18. Bohac, D.L. and Harrje, D.T., "Improving the Accuracy of a Constant Concentration Tracer-Gas System," 6th AIC Conference - Ventilation Strategies and Measurement Techniques, AIC, Great Britain, DOC AIC-PRO-85, 1985.

19. Dietz, R.N., and Cote, E.A., "Air Infiltration Measurements in a Home Using a Convenient Perfluorocarbon Tracer Technique," Environmental International, Special Issue on Indoor Air Pollution, Vol. 8, No. 1, 1982, pp. 419-433.

20. Dietz, R.N., Goodrich, R.W., and Cote, E.A., "Performance of a Passive Perfluorocarbon Tracer System for Building Ventilation and Air Exchange Measurement," ASTM Symposium - Measured Air Leakage Performance of Buildings, (in Press), 1985.

21. Harrje, David T., "The House Doctor Approach," Optimal Weatherization, Proceedings of the National Conference on Optimal Weatherization, Information Dynamics Inc., Silver Springs, MD, 1981, pp. 29-35.

22. Harrje, D.T., Persily, A.K. and Linteris, G.T., "Instruments and Techniques in Home Energy Analysis," Proceedings of the Energy Audit Workshop, Danish Building Research Institute, Copenhagen, Denmark, 1981.

23. Harrje, D.T. and Cooper, J.B., "Instrumenting Energy Audits," Princeton University Center for Energy and Environmental Studies, Report No. 91, 1979.

24. Harrje, D.T., Dutt, G.S. and Beyea, J., "Locating and Eliminating Obscure but Major Energy Losses in Residential Housing," ASHRAE Transactions, Vol. 85, Part II, 1979, pp. 521-534.

25. Dutt, G., Lavine, M., Levi, B. and Socolow, R., "The Modular Retrofit Experiment: Exploring the House Doctor Concept," Princeton University Center for Energy and Environmental Studies, Report No. 130, June 1982.

26. Harrje, D. T., Grot, R.A. and Gadsby, K.J., "Levels of Energy Monitoring in Houses," Proceedings of the Conference of Comparative Experimentation of Low Energy Houses, University of Liege, Liege, Belgium, 1981.

27. Harrje, D.T., Murphy, W.J., Schoen, L.J. and Gadsby, K.J., "Energy Diagnosis of More Complex Buildings," Energy Technology and Conservation - Proceedings of the 9th CIB Congress, National Swedish Institute for Building Research, Vol, 3a, 1983, pp. 69-82.

28. Harrje, D.T., "Monitoring Energy Use - What is Needed?", American Council for an Energy Efficient Economy (ACEEE) Summer Study, Santa Cruz, CA, August 1982.

Table 1. Channels Monitored in the Lightly Instrumented ("Omnibus") Townhouses.

1. Thermostat setting
2. Basement temperature
3. First floor temperature
4. Second floor temperature
5. Furnace on time or air conditioner on time
6. Electric water heater on time
7. Front door or front window open time
8. Back door or back window open time

9–12. Total electricity consumption

Channels 1–8 are recorded hourly, and Channel 9 is recorded at fifteen-minute intervals.

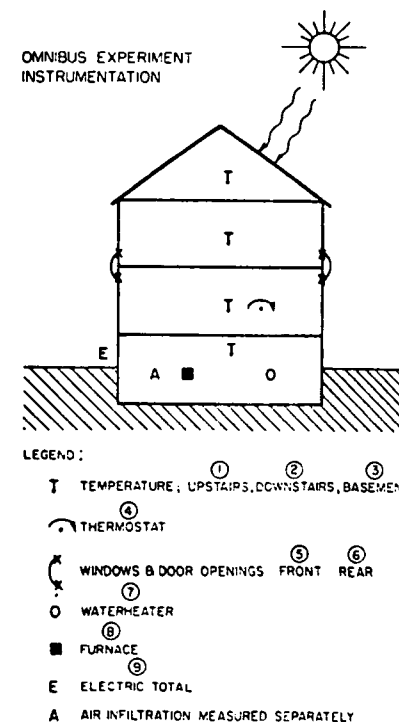

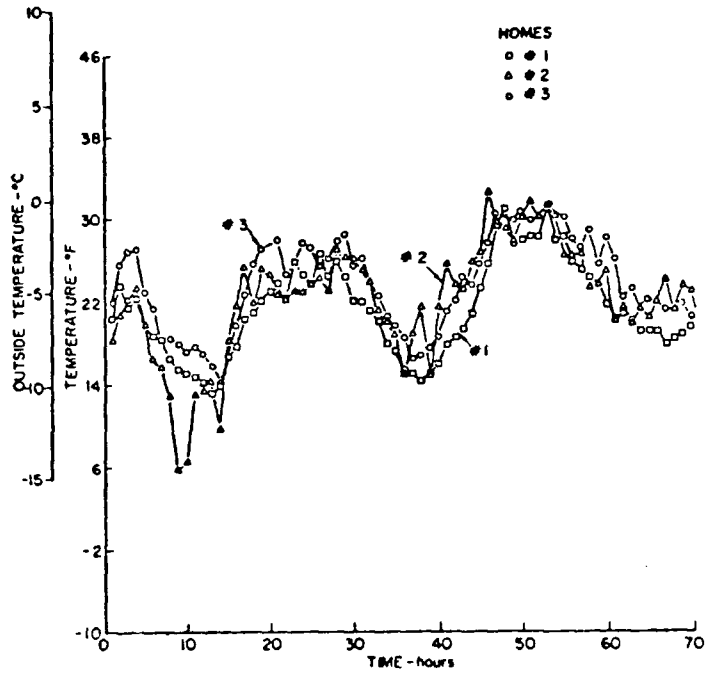

COMPARISON PLOT OF OUTDOOR TEMPERATURE AT VARIOUS HOMES

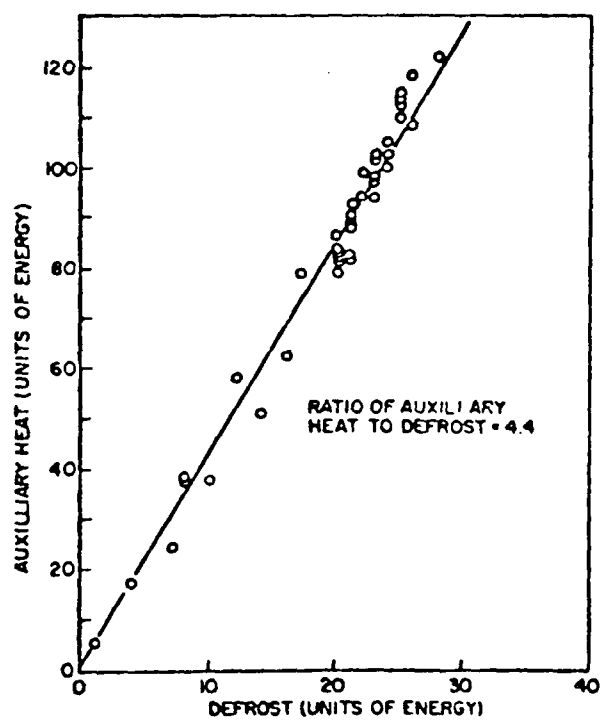

TYPICAL AUXILIARY HEAT REQUIREMENTS PER UNIT OF DEFROST OPERATION

Figure 1. Heat pump study data

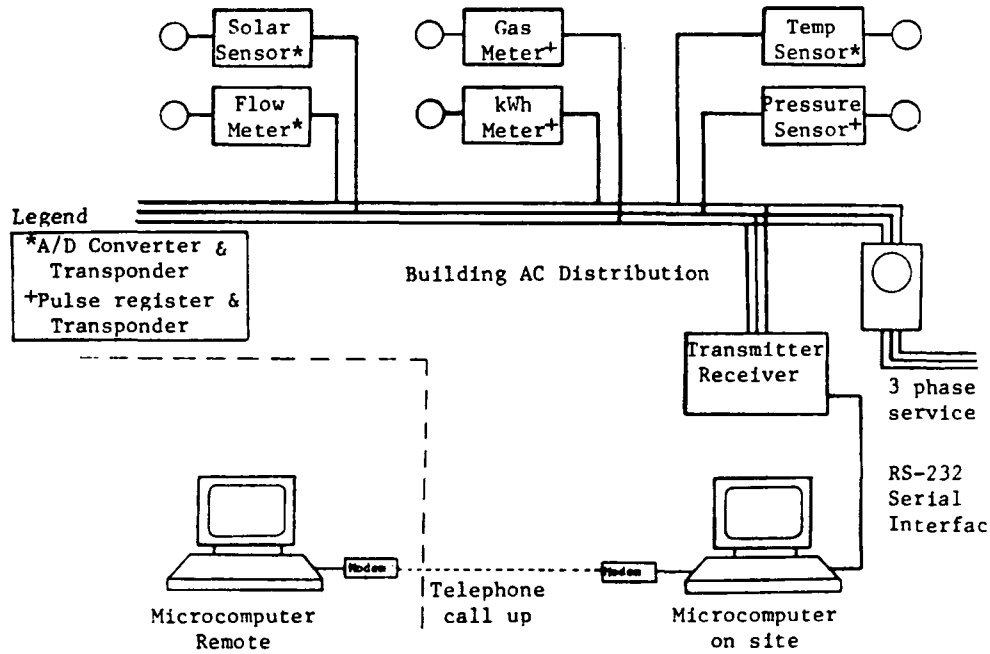

Figure 2. The power line carrier building monitor system.

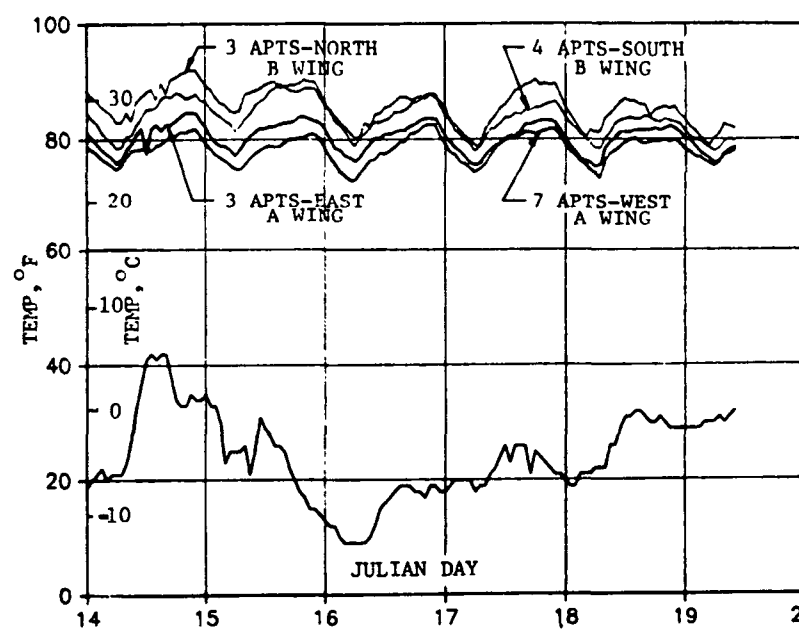

Figure 3. Apartment and outside temperature profiles via PLC.

BLOCK DIAGRAM OF
CONSTANT CONCENTRATION SYSTEM
Figure 4.

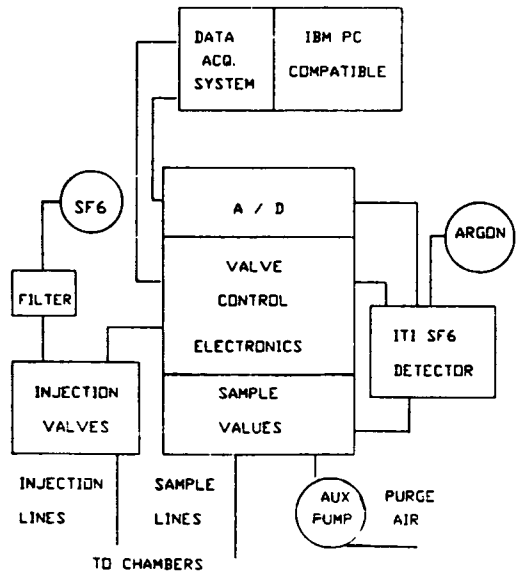

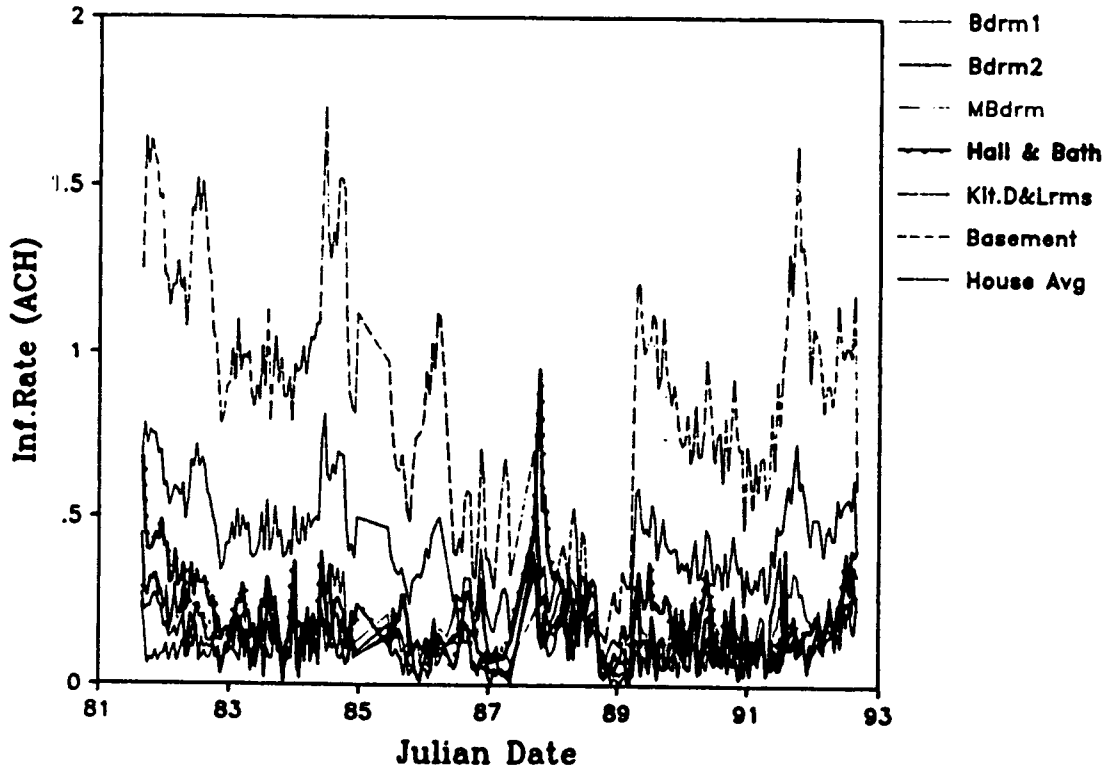

Figure 5. Detailed time history of 6 zones in the control house measured with the CCTG system at 10 minute intervals and hourly summary.

Measurement of Coincident Peak Electric Demand

Paul F. Swenson
East Ohio Gas Company
Cleveland, Ohio

ABSTRACT

BACKGROUND: The Special Projects Department at The East Ohio Gas Company routinely conducts comparative energy cost studies for residential and commercial buildings. As a gas utility our main objective is to provide accurate data on comparative energy costs where gas and electric alternatives are under consideration by a builder/developer, a customer or a potential customer.

DEMAND CHARGE ALLOCATION: The cost of gas energy is determined entirely by the cost of the commodity, after allowing for a small monthly service charge which is usually negligible for commercial building applications. The cost of electric energy is determined by a combination of commodity costs and demand or capacity charges. Commodity costs are relatively easy to predict, but applicable demand costs are difficult to forecast and allocate for any given connected load. The key to demand charge allocation is to identify the occurrence and composition of the coincident peak demand to be served by the customer's meter.

FIELD TEST PLANS: In principle the only completely accurate way to establish coincident peak demand level and composition for an existing building is to attach an electric demand monitoring device to each item of electrically energized equipment.

This procedure is usually impractical and prohibitively expensive. Three field test projects have been recently undertaken by the Company, each of which addressed the need for coincident peak demand determination and demand cost allocation by load application. These field tests, as planned, represent a diverse range of sophistication and expense.

SISTERS CHICKEN AND BISCUITS FAST FOOD CHAIN: A matched pair of Sisters Restaurants in Northeast Ohio were metered for the purpose of determining the comparative cost of water heating via gas vs. electricity.

WENDY'S FAST FOOD CHAIN: A matched pair of Wendy's fast food outlets in Northeast Ohio were submetered for the purpose of determining comparative costs of operating the traditional Wendy's all-electric kitchen vs. a gas kitchen. Each cooking appliance was submetered, and the electric kitchen and whole electric store were demand monitored.

AGA COORDINATED ELECTRIC HEAT PUMP TEST PROGRAM: East Ohio is sponsoring two residential electric heat pump field test sites. Electric commodity and demand data are being collected continually from each heat pump component and from each of the other major electrical appliances in these test houses.

RESULTS: Results available to-date from the above three field test projects demonstrate that a proper determination of coincident peak demand level and peak demand allocation is essential to accurate forecasting of comparative gas and electric operating costs for any given application.

CONCLUSIONS: The accuracy of prediction of coincident peak demand for applications in contemplated future construction can be aided through analysis of demand data from similar, existing applications in similar construction. Increased level of detail in field data enhances accuracy when using these data for demand forecasting purposes.

BACKGROUND

Comparative Energy Cost Studies

The Special Projects Department at The East Ohio Gas Company routinely conducts comparative cost studies for residential and commercial buildings. As a gas utility our main objective in conducting studies is to provide accurate data on comparative energy costs where gas and electric alternatives are under consideration by a builder/developer, customer or a potential customer. These studies are being conducted in a business environment that is becoming increasingly competitive. The three major electric utilities that provide electric service to customers in East Ohio's service area, Cleveland Electric Illuminating, Ohio Edison and Ohio Power, are becoming more and more aggressive in seeking space heating, water heating and food service cooking loads that have traditionally been dominated by gas. The search for additional electric service load is driven by the prospect of a growing excess in generating capacity in a region characterized by little or no population growth and an industrial base shifting away from previously dominant energy intensive processes. In addition, nuclear generating capacity will be brought on line in 1986 that was planned in the prior era of perceived energy shortages. Comparative energy cost studies are conducted by the Company on several levels of project comprehension:

- Single appliance application, e.g. a gas range vs an electric range;
- Whole house applications, e.g. an "all electric home" vs a home with gas heating and major appliances;
- Commercial construction project applications, e.g. an "all electric" building vs. a building with gas space heating, water heating, food service cooking if applicable, and even gas cooling or cogeneration.

Significance of Electric Demand Charges

Electricity demand charges apply without option to nearly all power used in commercial buildings in East Ohio's service area, and potentially attractive, optional residential rate schedules are available that offer reduced commodity cost in return for accepting a demand charge schedule. Generally, the residential demand schedules work out to best advantage where the residential monthly consumption is high, and a demand limiter is installed. The only non-demand commercial rate option available applies, ironically, to space heating, water heating and space cooling loads where electricity is the only energy source for these applications.

For the majority of commercial customers without the non-demand option, typically half of the monthly charges for electricity are demand related. For those residential customers with a demand option, usually less than half of the monthly charges are demand related.

The electric rate schedules that apply to the majority of commercial customers in East Ohio's service area are included as Appendix A.

DEMAND CHARGE ALLOCATION

Definitions & Methodology

The cost of gas energy is determined entirely by the cost of the commodity, after allowing for a small monthly service charge which is usually negligible for commercial building applications. The cost of electric energy is determined by a combination of commodity costs and demand or capacity charges. Commodity costs are relatively easy to predict, but applicable demand costs are difficult to forecast and allocate for any given connected load.
The key to demand charge allocation is to identify the occurrence and composition of the coincident peak demand to be served by the customers meter.

For any business or residence, lighting, electronic devices, computers, copiers and other small electric appliances are categorized herein as non-interruptible electric baseload. Also included in this category of load are most fans, blowers and other air moving equipment, window air-conditioners and refrigeration. It is assumed that the residential or commercial customer is not willing to tolerate interruption or postponement of the services represented by these load applications. It is also assumed that at present, viable energy alternatives for serving this load are not available unless the customer is a candidate for cogeneration, a subject which

is beyond the scope of this paper. Through the balance of this paper this load is referred to simply as the "electric baseload". The demand charge component allocated to electric baseload is determined by the baseload component normally occurring in coincidence with the peak demand occurrence for the entire connected load. This occurrence is the 15 or 30 minute period during which the customer's main service electric meter registers the highest, or peak 15 or 30 minute draw for the month.

The magnitude of the this peak draw determines the total monthly demand charge billed to the customer for that particular meter. The baseload portion of the customer's peak draw determines the baseload allocation of the customer's total monthly demand charge. It bears emphasizing that the baseload portion of the peak draw is the baseload that is coincident with the customer's peak, but not necessarily the peak baseload that occurs during the month. The peak baseload for the month may very well occur at a time different from the time of the customers peak draw.

For each additional load in addition to the baseload, the question must be posed: to what extent would the customers peak demand for billing purposes be affected if this particular load were to be subtracted? The answer defines the demand charge to be allocated to that load application. Because of the non-linearities present in most electric rate schedules demand charge allocations must be performed by subtraction, rather than via direct calculation.

From the gas utility perspective, demand charge allocation by subtraction has a basis in marketplace considerations. Beyond the electric baseload, most additional electric loads can be considered as optional; they can alternatively be served by gas. The demand charge allocation determined by subtraction becomes an important component in comparative energy cost analysis.

For load applications beyond the electric baseload, load shedding, or heat or cold storage can be employed by the customer. When these strategies are successfully employed, they can result in minimal or zero demand charges for a portion of the load. Demand charges for the additional loads as a whole cannot be eliminated altogether, however, unless they are small compared to hourly swings in the baseload.

An Example

Figure 1 is a demand profile by 30 minute intervals for an all-electric residential customer on a winter day. The profile is hypothetical, but was constructed from manual reads of individual load applications taken during the instrumentation check-out at one of the AGA-coordinated electric heat pump field test sites operated by East Ohio. (See below) The profile is broken out by individual load application for the period midnight to noon. The individual load applications are:

- Baseload (Unshaded portion at bottom of profile).
- Range (Second from bottom, designated "R").
- Water Heater (Spotted portion third from bottom, designated "WH").
- Heat Pump Indoor Unit (Shaded portion fourth from bottom, designated HPI).
- Heat Pump Outdoor Unit (Unshaded portion at top of profile, designated HPO).

Some comments on the load applications are in order. The water heater is assumed to be on a load limiting control, which delayed its operation in the morning until after the customer's monthly demand peak (and perhaps his shower) had been incurred. The range was not in use at the time. The heat pump indoor unit was the principal component in the demand peak, which occurred at 5:30/6:00 AM. Coincident peak demand contributions were made by the heat pump outdoor unit and the baseload in addition to the heat pump indoor unit. The indoor unit's load is comprised of the blower (600W) and two resistance heaters (5KW and 7KW). It could be argued that one or the other of these heaters could be locked out for an interval of time, or cycled on for periods of less than the 30 minute demand billing interval to provide time for the thermostat to become satisfied without incurring the maximum demand level seen in the example.

Demand control often requires a decision to impose discomfort on the customer. The only way to honestly offset a sustained 53,000 BTU/hr design day heat loss, which occurs at a time when the heat pump's COP is approximately 1.0, is to impose a total load of 15.6KW, as seen on Figure 1.

Clearly, a demand limit on the heat pump's resistance heaters would pay back substantial savings. The question remains, what about comfort under extreme conditions?

The coincident peak demand analysis leading to demand charge allocation and total electric cost allocation for the example are summarized in Table 1A. The data headed "One Step Demand Cost Allocation" shows demand cost allocations for each load when the load subtraction analysis is limited to the peak coincident demand period. The heat pump is the dominant and only load other than the baseload occurring during the peak coincident period.

The load subtraction process however, may be taken several additional steps in cases such as this example. Here, following subtraction of a highly dominant allocation to peak coincident demand a secondary peak coincident demand remains which occurs at another time, composed largely of elements other than the dominant load. For multiload cases such as this, independently determined demand charges due to the otherthan coincident peak dominant load may be of interest. The secondary (or tertiary, etc.) peak demands remaining after subtraction can be individually considered in sequence. This provides a sequence of peak demand compositions and corresponding demand charge allocations which result by sequentially removing the dominant loads. The progressive subtraction process may be repeated until the baseload alone remains. The multi-step subtraction process is reflected in the data headed "Multi-Step Demand Cost Allocation" on Table 1B.

FIELD TEST PLANS

Sisters Chicken & Biscuits

The gas vs. electric hot water heater test conducted for Sisters Chicken & Biscuits represents the minimum technology and lowest budget approach to electric demand charge allocation of the three field test projects reviewed in this paper.

Sisters Chicken & Biscuits Restaurant chain has been specifying electric commercial water heaters for all of their stores nationally. The Cleveland area franchisee, SISCOR, agreed to cooperate with East Ohio Gas in a comparative field test study of the economics and other operational characteristics of a current state-of-the-art high efficiency gas water heater and the standard commercial electric water heater presently specified by Sisters for SISCOR. East Ohio installed a gas-fired BGP Heatmaker to provide hot water service in a new SISCOR outlet which is located in the same area as another SISCOR outlet presently equipped with the standard commercial electric water heater. East Ohio submetered the energy supply to each of the two water heaters and also metered water delivery and water delivery temperature from both heaters. Also, a "Key 1000" demand monitor was connected to the electric water heater. Data was collected for one month.

The "Key 1000" demand monitor records revolutions of the mechanical motion of the rotating disk in a standard electric watthour meter via a photo electric sensor. Difficulties with this method include the verification of the one count per disk rotation and the analysis of hardcopy data. Manual counts of disk revolutions are required to verify data accuracy and there is no means of identifying possible errors during "unwatched" operation. The data recorded by the "Key 1000" during the Wendy's test (see below) included excessive meter revolution counts in more than one instance. Also, data analysis is cumbersome as hardcopy data must be transferred to software for data reduction.

The logistics of installing the "Key 1000" sensor on the Sisters store main service meter were complicated by the local electric utilities practice of locating the meter on a remote transformer kiosk on dedicated ground. Use of a pulse generating meter as is being employed in the AGA coordinated electric heat pump field test (see below) was rejected because of the expense and disruption associated with breaking into the store's main service.

Wendy's

Wendy's International has typically offered gas as an option for heating and water heating equipment in company-operated and franchised stores. Wendy's did not offer a commercial gas cooking option as a matter of company policy until completion of the field test being described herein. On March 29, 1983, the American Gas Association, East Ohio Gas, and Columbia Gas Co., met with Wendy's International to discuss the evaluation of commercial gas cooking equipment.

A test project with the Wendy's Food Systems, Inc., Northeast Ohio franchisee, was approved. Wendy's International's Research and Product Evaluation Department agreed to

assist with the test which would be implemented by the East Ohio Gas Co. The objective of the program was to provide Wendy's with both raw field data and also results from data analysis for their use in evaluating the merits of comparative gas and electric commercial cooking equipment.

Two Wendy's stores in Northeast Ohio served as sites for the test project. The stores were identical except that the kitchen in one used gas commercial cooking equipment and the other store used comparable electric cooking equipment. The electric test site in Stow, Ohio opened in July, 1983 and the gas test site in nearby Ravenna opened three months later.

Cooking equipment used in the gas test store was selected by Wendy's International and its franchisee, Wendy's Food Systems.
The electric cooking equipment conformed to the normal Wendy's specifications for standard electric cooking equipment. The commercial cooking equipment packages for both test sites consisted of two griddles, two floor model fryers, a hot-top range, a pressure fryer and a half-size convection oven. Instrumentation to measure the energy use and demand profiles for the cooking equipment at both the gas and electric sites was designed by the Special Projects Department of the East Ohio Gas Company.

All cooking equipment units at both test sites were individually metered so that daily energy consumption for each unit could be determined by taking morning and evening meter readings. "Key 1000" demand monitors were employed to record demand levels for the electric store's kitchen as a whole, and also the entire store. Each store recorded the daily number of food items sold. Energy consumption and food production data were collected from mid-December, 1983, until April, 1984.

A listing of the projects experiment design considerations is shown on Table 2.

AGA-COORDINATED ELECTRIC HEAT PUMP

Following the unprecedented rate of increase in gas and electric utility rates during the late 1970's, utility customers everywhere became conscious of energy costs, and many acquired an interest in controlling these costs. By 1980, residential marketing at East Ohio recognized the need for an effective computerized energy systems program, attuned to the specific needs of residential gas utility customers.

critical ingredient recognized for such a program was field data on electric heat pumps. Several sources of experimental and field data on electric heat pump performance were consulted and reviewed (Blake & Gernett 1978; Miller, 1978; 1 & Kelly 1979) in addition to the field data on heat pump performance that had been previously generated by the Company's field test program [1,2,3]. The principal objective of the heat pump simulation effort was to rationalize available field test and laboratory data with manufacturer's published design point (17°F and 47°F) performance data.
It became clear, however, that the electric heat pump represented a "moving target", and that periodically obtained field test data would be necessary to keep the heat pump model used in the Company's energy program current. For these reasons, the Company joined the AGA-Coordinated electric heat pump field test program.

The AGA heat pump field test program is presently entering its first actual winter test season. Figure 2 is a schematic diagram of the data acquisition system that has been installed at each test site. This system represents little compromise with respect to individual load demand recording. Electrical pulses generated by the Duncan Electric Watt-Hour Meter Programmable Demand Registers shown on Figure 2 are electronically relayed to CTM-5 interface boards mounted in an IBM-PC. Software records the number of pulses generated in each five (5) minute interval and records the data. Hardcopy of the data is impractical as one (1) week of data requires 10,080 data records, or over 150 pages of 8½x11 computer printout. Data reduction is to be performed on software, and a data checking program is employed to identify data errors.

The heat pump indoor and outdoor units are each metered as a single load. The only load data ambiguity occurs in conjunction with the defrost function, at which time the indoor unit load is characteristic of the heating mode with supplemental heating while the system control functions, which are also recorded are set per the cooling mode. The data processing software is programmed to distinguish this mode of operation from normal heating or cooling. The data processing plan is shown on Figure 3, and the contents of the monthly reports for each test site, which will be prepared by AGA's contractor, Mueller Associates, Inc., is outlined in Table 3.

A major objective of the AGA heat pump field test program is to document peak residential demand levels and also the residences peak demand allocations that

are due to the heat pump indoor and outdoor units, separately and together. In addition, commodity consumption and peak demand allocations corresponding to the electric water heater and range, each in the absence of demand limiting controls will be individually recorded. Also of interest is the timing of peak demand for the whole house. Results from this program will not be available before September, 1986.

RESULTS

Sisters Chicken & Biscuits

For the gas water heater the cost of energy was determined by adding the cost of gas consumed to the cost of electricity consumed by the Heat Maker's pump and power burner. For the electric water heater the cost of energy consumed was determined by adding the commodity cost of the electricity consumed (KWh) to the per gallon share of the demand charge allocation attributable to the electric water heater's operation. The incremental demand charge due to the electric water heater is a result of the water heater operating for a period of time during the same period as when the store kitchen and base load electric consumption reaches its daily peak, which occurs around noon.

Interpretation of the data from this site was hampered by lack of entire store demand monitoring. The expense associated with demand monitoring the entire store was judged to be unjustifiable for this field test. In retrospect this judgement may have been unwise. The demand profiles recorded for the electric water heater had to be analyzed for entire store coincident demand contribution via observation of the store's operation and business level through the day. A typical day's recorded demand profile for the electric water heater is shown on Figure 4. It was "judged" that a demand allocation of at least 8 KW could be assigned to the electric water heater for the period around noon, when it was deduced that the entire store peak draw occurs. The much higher demand levels for the water heater occurring at clean up time late in the evening do not coincide with the entire store peak. The late evening 30 minute peak for the water heater comes quite close to the heater's nameplate load of 18 KW.

The measured energy use efficiencies for the gas and electric heaters were not far apart. The cost of electric energy, however, is several fold greater than gas in East Ohio's service area. The gas-fired Heatmaker, which is a semi-instantaneous unit employing a premix power burner, produced water at an average cost per gallon of $0.0056. The electric commercial water heater produced a gallon of hot water for an average cost of $0.0223. The electric cost breaks down to $0.0185 per gallon for electric commodity consumption and an average of $0.0038 per gallon due to allocated electric demand costs. The 8KW peak demand allocation estimated for the electric water heater may be low. The observed average daily consumptions of hot water were 800 and 600 gallons, respectively, for the North Olmsted (gas water heater) and Brooklyn (electric water heater) stores. The operations and sales at these stores are nearly identical. The greater level of hot water consumption at the North Olmsted store was traced to a continuously leaking faucet. For Sisters stores with equal hot water consumption in the Cleveland area, a monthly savings of $250 can be expected for the gas water heater.

Wendy's

The first step in organizing and presenting the data from the two Wendy's test stores was to construct a regression analysis for every piece of cooking equipment in each store. The regression analyses represent a correlation between energy usage and food production, and thereto established operating efficiencies for the gas and electric cooking equipment under actual use conditions. The regression analysis clearly showed that standby energy requirements were the most significant factors affecting energy consumption, with the production volume of food having less significance than previously expected. A pair of typical regression lines are shown on Figure 5. A pair of orders-weighted composite regression lines for all of the cooking equipment in each test store was also generated, and are shown on Figure 6.

As shown by Figure 6, the gas cooking equipment selected for the test by Wendy's and its franchisee, consumed, on average, twice as much energy as the standard electric cooking equipment.

The fryers consumed the largest amount of energy, or about one third of the total, at both the gas and electric locations, with the hot top range and the griddles each consuming about one fourth of the total energy used for cooking. At present, gas commercial cooking equipment is available that can do considerably better on efficiency than the equipment installed at the gas test store.

A typical entire store and kitchen-only daily demand profile is shown on Figure 7. As stated above, these profiles were

manually accessed from the "Key 1000" output tapes and then input for software-assisted analysis and graphic printout. The manual access and inputing task was quite tedious. Analysis of a large number of daily demand profiles provided the following results with respect to demand cost allocation for the test store.

- The electric kitchen contributes approximately half of the coincident peak demand for the entire store.
- The coincident peak occurred in the early evening when the cooking load overlapped onto lighting and refrigeration peaks.
- The peak cooking load occurs at the time the store opens in the morning, as the equipment warms up.
- The electric kitchen's allocation of the entire store peak demand represents slightly less than 30% of the connected load in the kitchen. This is because the heating elements are substantially oversized relative to steady state cooking requirements.

With about 50% of the entire store demand charge allocated to the kitchen, the cost of the power for operating the kitchen becomes considerably more expensive than baseload power.

Overall, the results showed that wintertime energy cost savings offered by the gas cooking equipment were approximately $300 per month. This corresponds to a savings of approximately 14 percent of the store's wintertime total energy costs and over 50 percent of the store's cooking energy costs. These savings are due, mainly to eliminating the impact of the electric commercial cooking equipment on the overall electrical power demand for the store. The data indicated that the savings level was only weakly affected by sales volume. This is because of the rather flat energy use vs. number of orders regression line, and also because there was no operating cost savings for the gas equipment when considering only the commodity costs for electricity. Kitchen demand level was not seen to be affected by day-to-day variation in store sales volume.

Figures 8 and 9 illustrate the dominant effect that demand level and demand charge rates have on the cost of operating the electric kitchen in a Wendy's store. Monthly power consumption (KWh) has a very minor effect. The results and conclusions drawn from this field test project are described more fully in the September, 1984, AGA Monthly.[4]

CONCLUSIONS

Based upon the results from the three field test projects described in this paper, and East Ohio's experiences in planning, preparing and conducting the tests and interpreting the results, the following conclusions are offered:

1. The time and circumstances for peak coincident demand occurrence can be difficult to predict or detect without direct measurement.
2. Methods for determining and verifying peak coincident demand occurrence and correct demand charge allocation can vary substantially in cost and sophistication. The more detailed and complete the data, the more accurate the forecast for demand charge allocation in similar applications.
3. Connected load alone will usually not provide an accurate basis for prediction of demand allocation for either a single load or a group of loads.
4. The demand charges allocated to any particular load application can represent a majority of the power cost, and make all the difference in the results of an energy cost comparison study.

ACKNOWLEDGEMENTS

1. D. R. Gilbert, East Ohio Gas Company
   Data acquisition and processing; Sister's, Wendy's, and AGA Heat Pump Field Tests.
2. R. H. Hassel, East Ohio Gas Company
   Test site preparation, instrumentation and trouble-shooting; Sister's, Wendy's and AGA Heat Pump Field Tests.
3. E. A. Reid, Columbia Gas Service Company
   Experiment design and general advice, Wendy's Field Test.

4. C. J. Zucco, East Ohio Gas Company

   Test site maintenance; Sister's, Wendy's and AGA Heat Pump Field Tests.

REFERENCES

1. Blake, Paul J.; Gernert, William C. 1978. Load and use characteristics of electric heat pumps in single-family residences. New York: Association of Edison Illuminating Company & Palo Alto: Electric Power Research Institute.

2. Miller, Michael. 1978. "Seasonal efficiency of heat pumps assessed on a regional basis are sole valid judgement criteria". Air Conditioning, Heating And Refrigeration News, May 29, 1978, pp. 19.

3. Didion, David; Kelly, George. 1979. "New testing and rating procedures for seasonal performance of heat pumps". ASHRAE Journal, Sept. 1979, pp. 40-45.

4. Geier, M. J. 1984. "Wendy's Goes Gas". AGA Monthly, Sept. 1984, pp. 6-8.

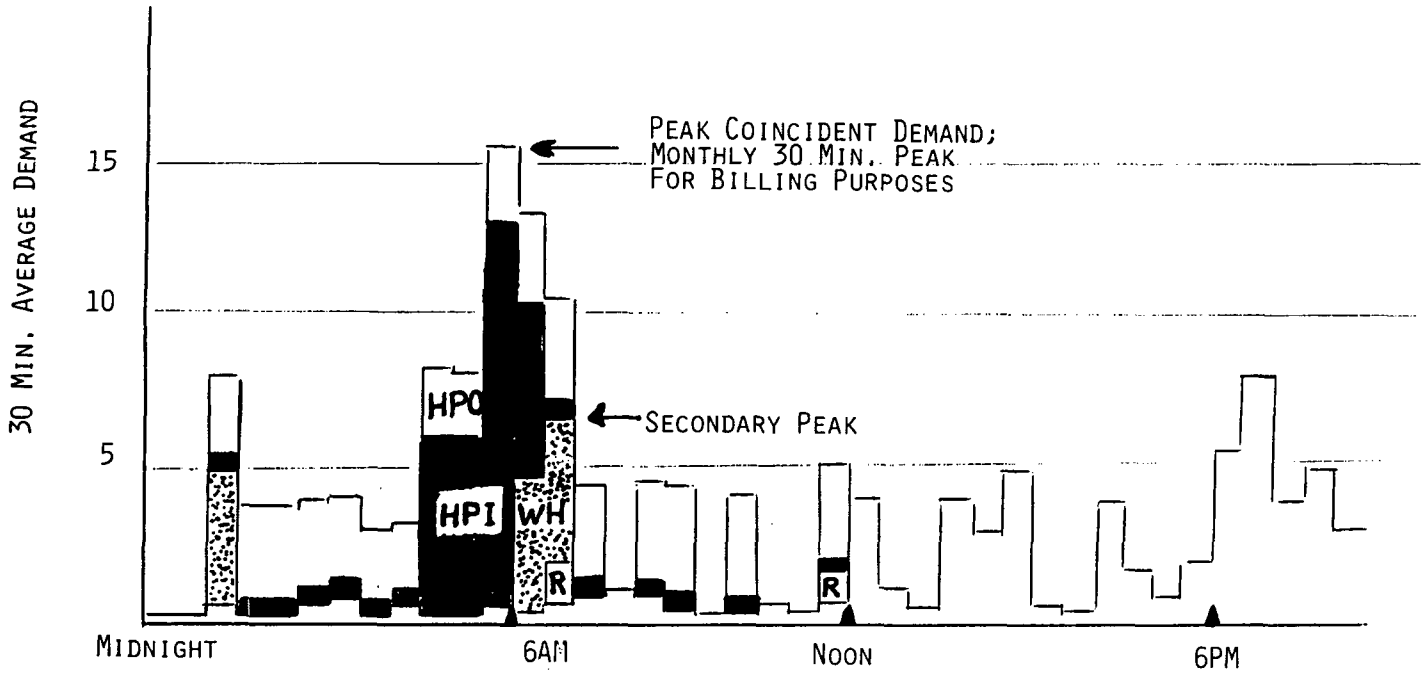

Figure 1. Typical Residential Demand Profile for All-Electric Home (Winter); Water Heater on Demand Limiter.

TABLE 1A

ALLOCATING ELECTRICITY COST
BY APPLICATION

ALL ELECTRIC HOME - WINTER MONTH

RATE SCHEDULE: OHIO EDISON RESIDENTIAL DEMAND OPTION

COMMODITY: 1.63¢/KWH + 1.9¢ FCA = 3.53¢/KWH
DEMAND: $6.90/KWD
MONTHLY CHARGE: $8.95

COMMODITY COST ALLOCATION

APPLICATION	COMMODITY USE (KWH)	COMMODITY COST ($)
BASELOAD	500	19
RANGE	100	4
WATER HEATER	500	19
HEAT PUMP	2000	76
WHOLE HOUSE	3100	118

NOTES

1. DISTRIBUTED, THIS TABLE
2. ASSIGNED TO BASELOAD

TABLE 1A (CONT.)

ALLOCATING ELECTRICITY COST
BY APPLICATION

ALL ELECTRIC HOME - WINTER MONTH

ONE-STEP
DEMAND COST ALLOCATION

APPLICATION	COINCIDENT DEMAND @ TIME OF PEAK (KWD)	COST ($)
BASELOAD	.6	4.14
RANGE	0	0
WATER HEATER	0	0
HEAT PUMP	15	103.50
WHOLE HOUSE	15.6	107.64

ONE-STEP
TOTAL COST ALLOCATION

APPLICATION	TOTAL COST ($)	COST PER KWH (¢)
BASELOAD	23.14	4.63
RANGE	4.00	3.53
WATER HEATER	19.00	3.53
HEAT PUMP	174.10	8.70
WHOLE HOUSE	226.02	7.30

TABLE 1B

ALLOCATING ELECTRICITY COST BY APPLICATION

ALL ELECTRIC HOME - WINTER MONTH

MULTI-STOP DEMAND COST ALLOCATION

APPLICATION	ADDITIONAL COINCIDENT DEMAND @ TIME OF PEAK (BY SUBSTRATION) (KWD)	COST ($)
BASELOAD[1]	1.1	7.59
RANGE [2]	.8	5.52
WATER HEATER [3]	4.5	31.05
HEAT PUMP [4]	9.2	63.48
WHOLE HOUSE	1.1[1], 1.9[2], 6.4[3], 15.6[4]	7.59[1], 13.11[2], 44.16[3], 107.64[4]

MULTI-STEP TOTAL COST ALLOCATION

APPLICATION	TOTAL COST ($)	COST PER KWH (¢)
BASELOAD	34.19	6.8
RANGE	9.05	9.05
WATER HEATER	48.70	9.74
HEAT PUMP	134.08	6.7
WHOLE HOUSE	34.19[1], 43.24[2], 91.94[3], 226.02[4]	6.8, 7.2, 8.4, 7.30

NOTES

1. BASELOAD ONLY
2. BASELOAD & RANGE ONLY
3. BASELOAD, RANGE & WATER HEATER ONLY
4. ALL ELECTRIC HOUSE

TABLE 2

EXPERIMENT DESIGN CONSIDERATIONS

WENDY'S FIELD TEST PROGRAM

1. Equipment to be tested will be:
   - fryers
   - pressure fryers
   - chili stoves
   - griddles
   - convection ovens

2. The restaurants to be tested will have relatively equal food production statistics for the individual gas and electric equipment items to be tested.

3. Each cooking appliance in each store will be separately submetered. Digital read gas and electric meters are to be used for all submetering.

4. "Key 1000" demand monitors will be installed on the entire electric store load and also on the electric store kitchen.

5. All energy submeters will be manually read twice daily at consistent times, before store opening, and at store closing.

6. Daily food production records will be obtained from the restaurant management for comparison with energy use.

7. A standardized recording form will be used for all daily and monthly data to be recorded.

8. Both electric and gas service meters used for purposes will be read monthly just prior to the utility company reading. Both KW demand and KWH will be recorded from the electric meter. Copies of monthly gas and electric bills will be obtained for comparison to task force records.

9. Both gas and electric appliances will be tested for thermostat accuracy prior to beginning of field tests.

10. The gas equipment to be tested will be examined for proper burner adjustment. Adjustments will be made where necessary to assure peak gas burner performance.

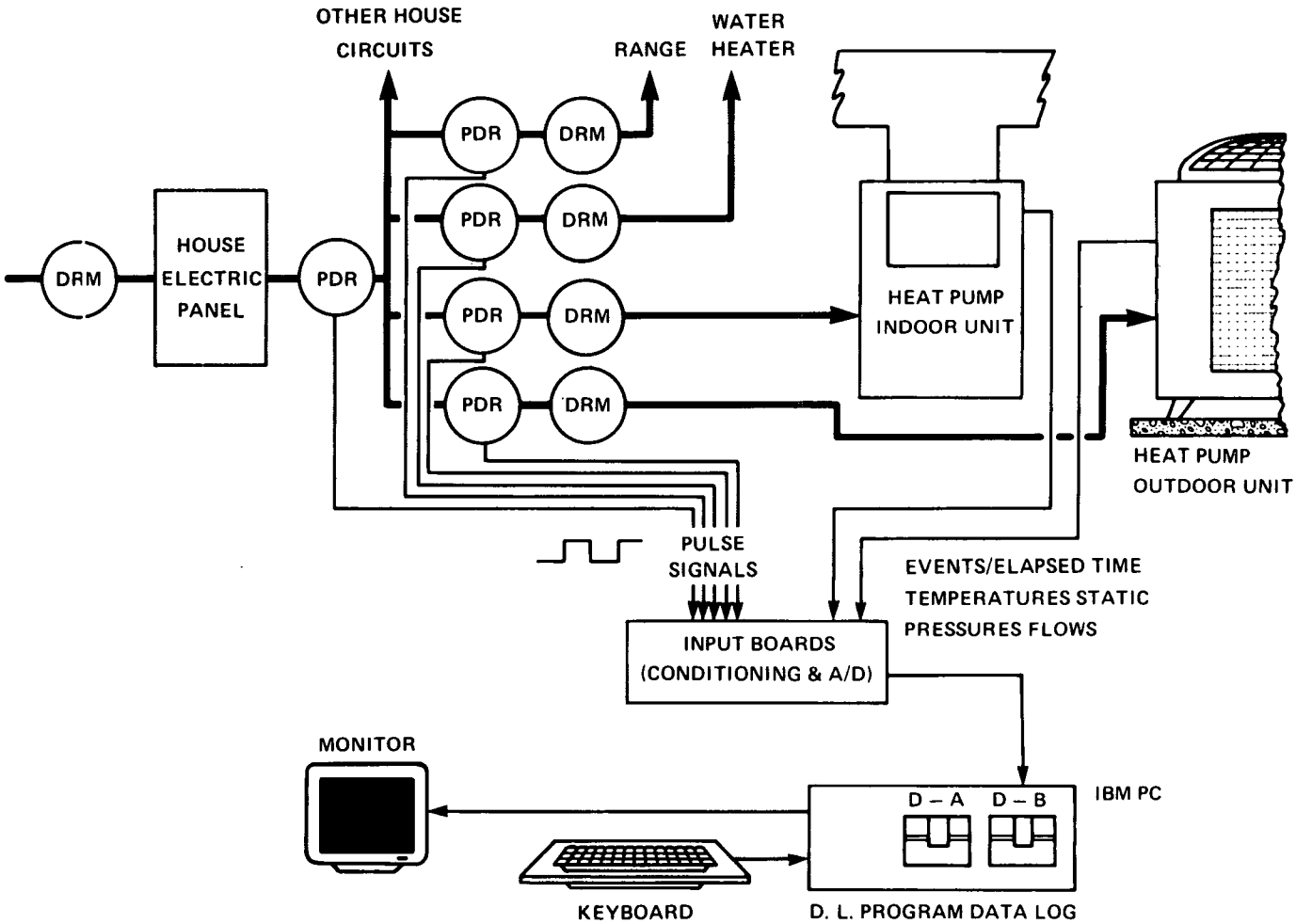

Figure 2. AGA Electric Heat Pump Field Test - Data Acquisition System.

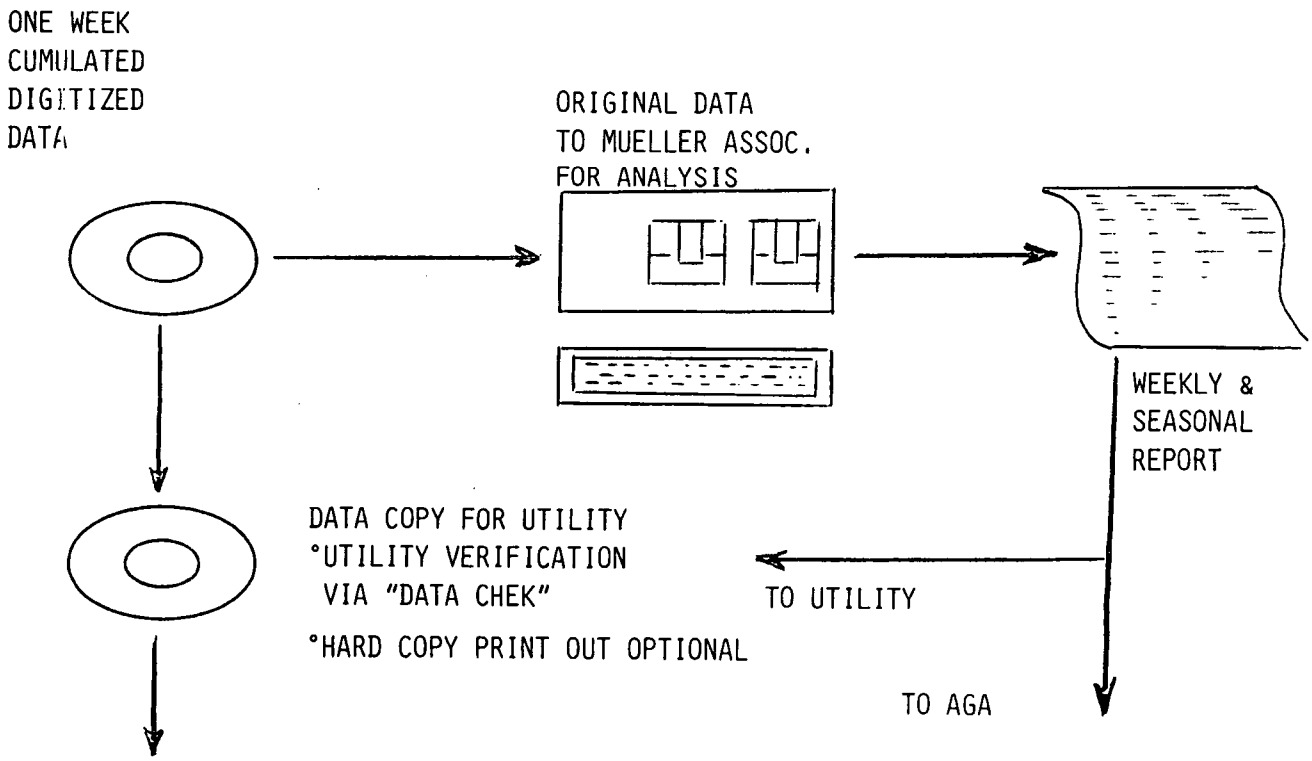

Figure 3. AGA Electric Heat Pump Field Test - Data Processing Plan.

TABLE 3

AGA ELECTRIC HEAT PUMP FIELD TEST PROGRAM
MONTHLY REPORT TO UTILITY TEST SITES

- Total residential commodity (KWH) and peak demand (KW).
- Submetered commodity and peak demand.
- Residential coincident peak demand allocations for each appliance.
- Datachek Report
  - Missing data.
  - Out-of-bounds data.

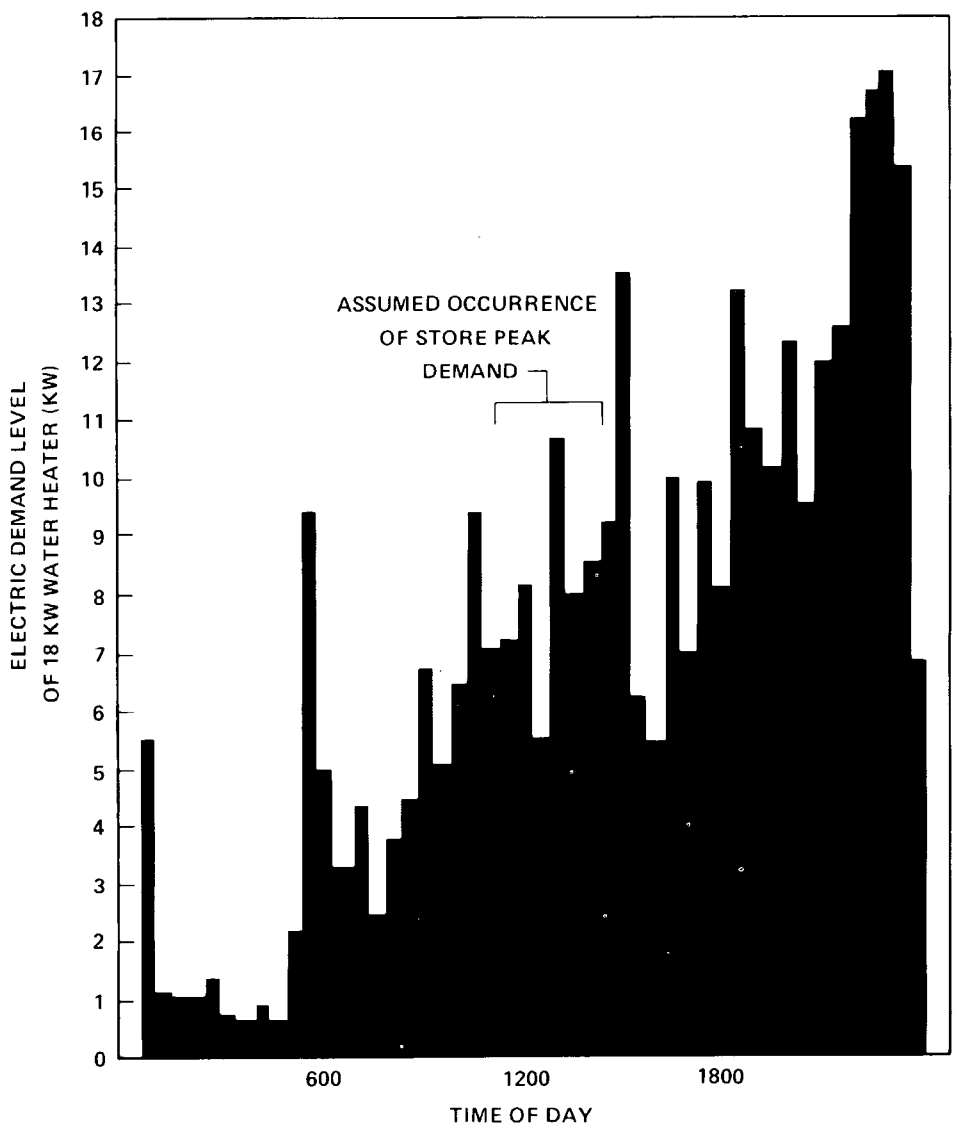

Figure 4. Average Electric Demand of 18-kW Water Heater Over 30-min Periods.

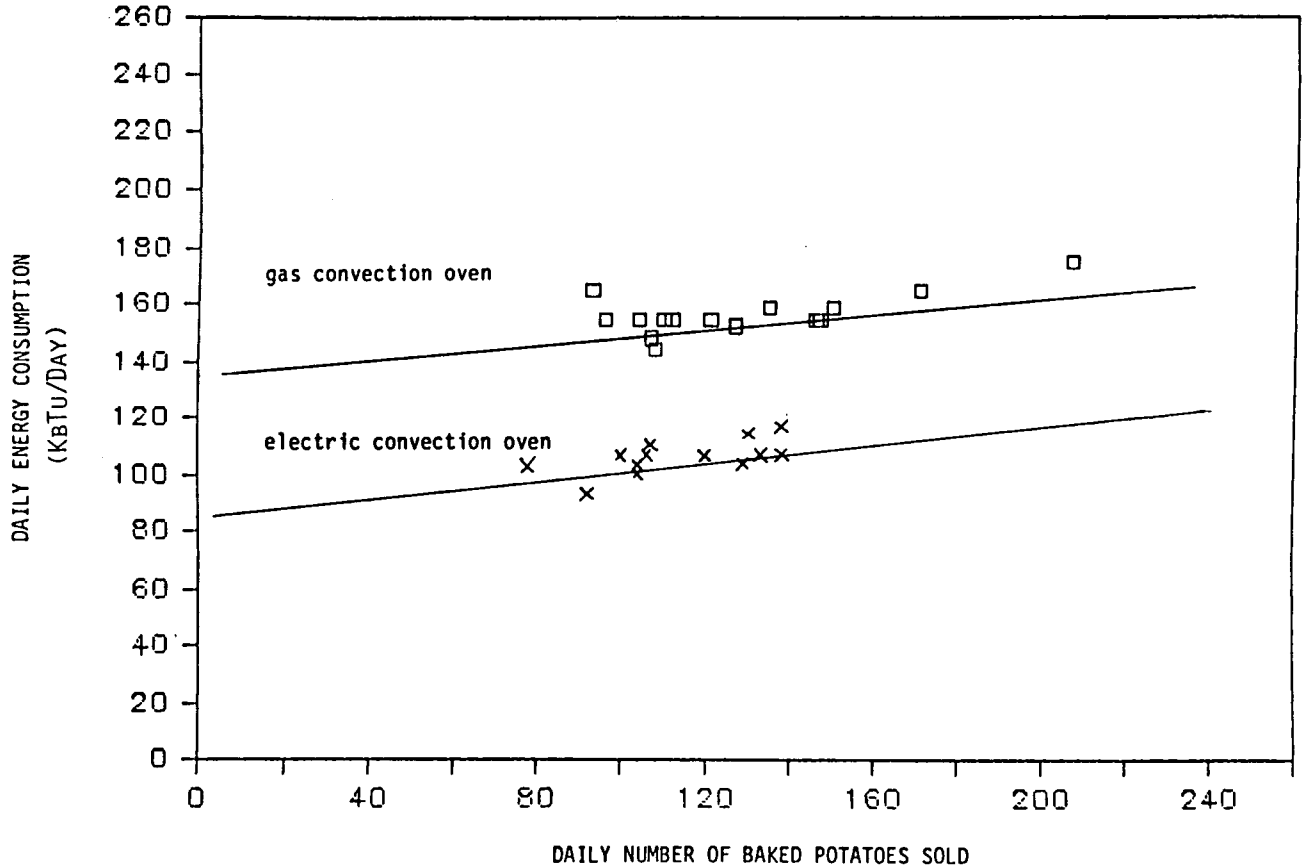

Figure 5. Baked Potatoes in Gas and Electric Convection Ovens.

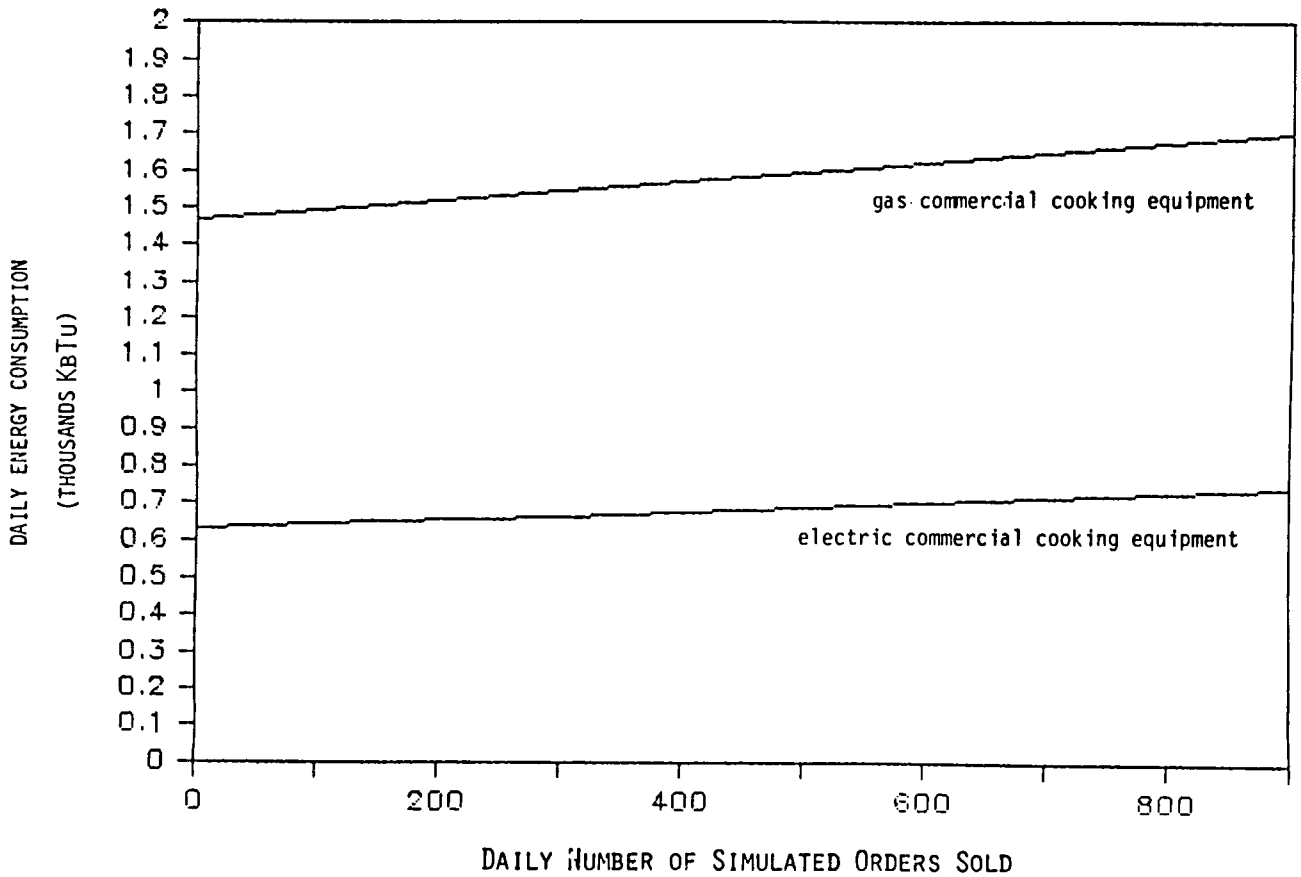

Figure 6. Simulated Commercial Cooking Equipment - Daily Energy Usage.

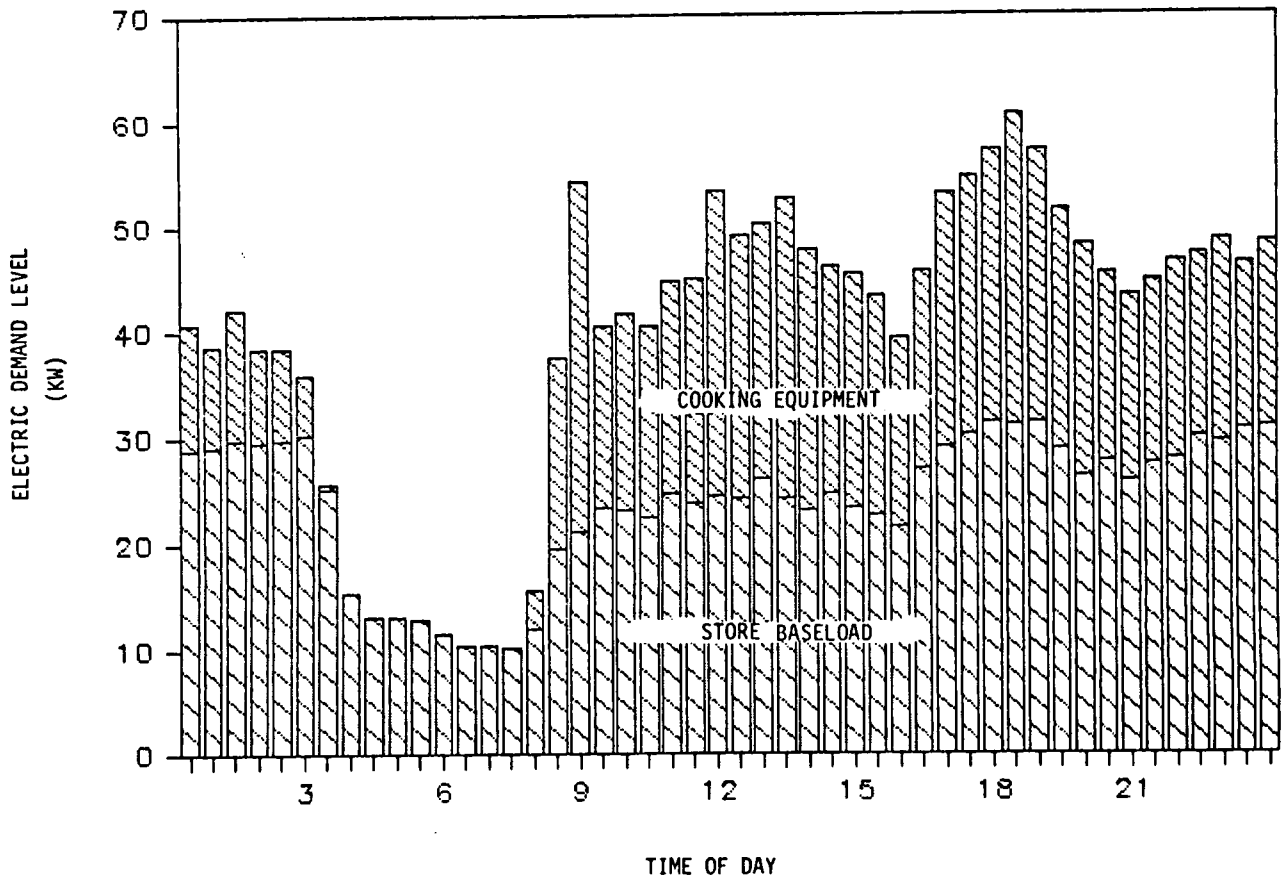

Figure 7. Electric Demand Contributed by Commercial Cooking Equipment.

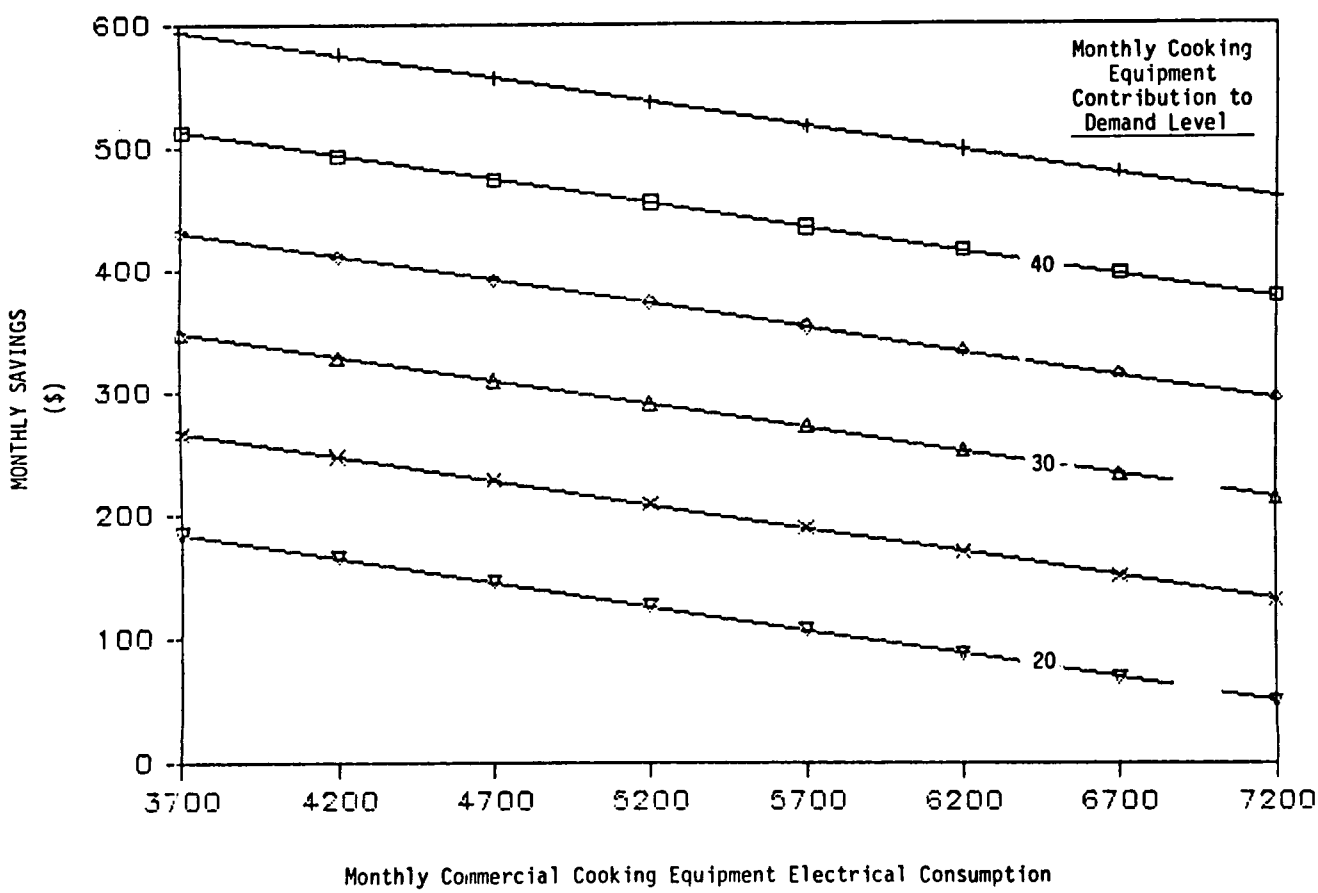

Figure 8. Site-Specific Savings for Wendy's - East Ohio Gas/Ohio Edison.

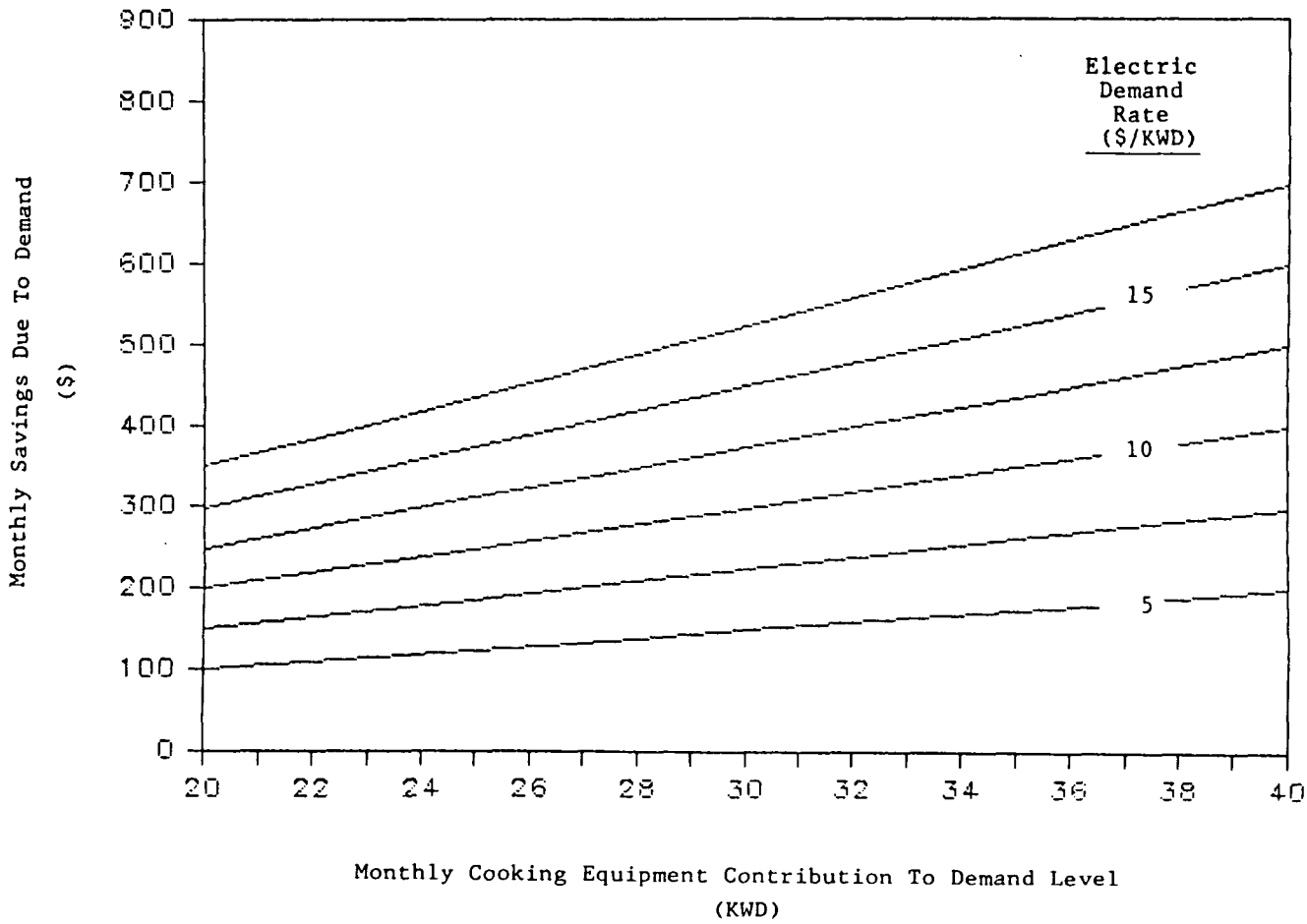

Figure 9. Cooking Energy Cost Savings Due to Electric Demand.

APPENDIX A

Commercial Electric Rate Schedules
East Ohio Gas Service Area

P.U.C.O. NO. 12
ELECTRIC SERVICE

LARGE COMMERCIAL SCHEDULE

Applicable to any commercial or industrial Consumer having a demand equal to or in excess of 30 kW during the current month or any of the preceding eleven months.

MONTHLY RATES:

1. KILOWATT DEMAND CHARGE

		SUMMER	WINTER
		Dollars per kW	
For the first	50 kWd	$9.61	$8.62
For all excess over		$8.32	$7.43

2. REACTIVE DEMAND CHARGE

	Cents per rkVA	
For each rkVA of reactive billing demand	20.0	20.0

3. KILOWATTHOUR CHARGE

		Cents per kWh	
For the first	40,000 kWh	4.58	4.15
For the next	60,000 kWh	3.27	2.95
For all excess		2.86	2.66

4. SEASONAL RATES

The Winter Rates specified above shall be applicable in eight consecutive monthly billing periods beginning with the October bills each year. The Summer Rates shall apply in all other billing periods.

Filed under authority of Order No. 84-188-EL-AIR of
The Public Utilities Commission of Ohio, dated March 7, 1985

Issued March 12, 1985 by Robert M. Ginn, Chairman of the Board
Effective for service rendered on or after March 12, 1985

GENERAL SERVICE

SECONDARY VOLTAGES

Availability:

Available to general service installations requiring secondary voltage service.

Both single and three phase service will be metered through one meter and so billed unless circumstances not under the control of the Company make it impractical or not feasible to do so.

Service:

Alternating current, 60 Hz, at nominal voltages of 120/240 or 120/208 or 277 single phase, or 120/208 or 277/480 three phase, as may be available from suitable distribution facilities of adequate capacity adjacent to the premises to be served. Other secondary voltages or service from primary or transmission facilities may be obtained from available facilities provided the customer owns, operates and maintains all necessary transforming, controlling, regulating and protective equipment.

The Company designs and operates its electrical system to provide service voltages within the limits specified in American National Standard Voltage Ratings for Electric Power Systems and Equipment (60 Hz) C84.1-1970.

Rate:

The net monthly charge per customer shall be:

Customer Charge: $13.15

Demand and Energy Charges:

The lesser of (a) or (b):

(a) Demand Charge:

First 100 KW, per KW $14.90
Over 100 KW, per KW $13.86

Energy Charge:

First 250 KWH per KW of billing demand, per KWH ..... 2.09¢
Over 250 KWH per KW of billing demand, per KWH ..... 0.82¢

(b) Fixed Energy Charge per KWH: ..... 11.00¢

Minimum Charge:

$13.15 plus $4.50 per KW of billing demand in excess of 5 KW plus applicable fuel adjustment charge.

Recreation Lighting:

Billing for separately metered non-profit outdoor public recreation facilities shall exclude the application of the minimum charge.

Billing Demand in KW:

The billing demand for the month shall be the greatest of:

(1) The highest measured 30-minute KW demand during the month
(2) 5.0 KW
(3) The contract demand

When metering capable of measuring on-peak and off-peak demands is in use, the customer's measured demand shall be the greater of the on-peak demand or 25 percent of the off-peak demand. Where a customer has the capability of moving a deferrable demand to an off-peak period and desires to do so, the Company will provide the metering capability to measure demands occurring during on-peak and off-peak periods upon payment by the customer of an amount equal to the additional cost of a time-of-day meter. These installations are not available to seasonal customers.

(Continued)

Filed under the authority of Order No. 83-1130-EL-AIR. Issued by The Public Utilities Commission of Ohio

TARIFF G.S.
(General Service)

AVAILABILITY OF SERVICE

Available to any customer for light, heat, power, and/or other purposes whose metered demand is not capable of exceeding 100 kw. Customers whose metered demand is capable of exceeding 100 kw and who were served hereunder on July 16, 1982, may continue to be served under this tariff.

RATE

Demand Metered Customer

Customer charge per month	$15.70
Demand charge.....	3.36 per kw
Energy charge.....	2.580 cents per kwh

Non-demand Metered Customer

Customer charge per month	$12.00
Energy charge.....	3.639 cents per kwh

Recreation Lighting

Available to customers for separately metered non-profit outdoor public recreation facilities.

Customer charge per month	$15.70
Energy charge	4.263 cents per kwh

MINIMUM BILL

The minimum charge under this tariff is equal to the appropriate customer charge designated above, plus the demand charge per kw of monthly billing demand applicable to demand metered customers, and the adjustment as determined pursuant to the Electric Fuel Component provision below.

DELAYED PAYMENT PROVISION

This tariff is net if account is paid in full on or before fifteen (15) calendar days after the mailing date of the bill. On all accounts not so paid an additional charge of 5% of the total amount billed, exclusive of the amount billed under the Electric Fuel Component, will be made.

ELECTRIC FUEL COMPONENT

In addition to the charges pursuant to the Rate above, there shall be an Electric Fuel Component charge per kilowatt-hour as specified in the Electric Fuel Component Rider on Sheet No. 27.

TAX ADJUSTMENT RIDER

Monthly charges computed under this tariff shall be adjusted when applicable, as specified in the Tax Adjustment Rider on Sheet No. 28.

CREDITS MODIFYING RATE

Bills computed under the rate set forth herein will be modified by credits as follows:

A. Metered Voltage

The rate set forth in this tariff is based upon the delivery and measurement of transformed energy. When the measurement of energy is made at the primary voltage of the transmission or distribution line serving the customer, the kwhrs as metered will be multiplied by .97.

(Continued on Sheet No. 15a)

Filed under the authority of Order No. 83-98-EL-AIR of the Public Utilities Commission of Ohio

OPTIONAL RESIDENTIAL SERVICE

TIME-OF-DAY

Availability:

Available for residential service to installations served through one meter for each family unit in a residence or apartment.

When service is used through the same meter for both residential and commercial purposes the applicable general service rate schedule shall apply.

This rate schedule is not available for service to commercial, institutional or industrial establishment.

Service:

Alternating current, 60 Hz, single phase, nominal voltage 120/240 or 120/208 as available.

The Company designs and operates its electric system to provide service voltages within the limits specified in American National Standard Voltage Ratings for Electric Power Systems and Equipment (60 Hz) C 84.1-1970.

Rate:

The net monthly charge per customer shall be:

Customer Charge: $8.95

Billing Load Charge, per KW $6.90

Energy Charge:

All KWH, per KWH ..... 1.626¢

Minimum Charge:

Customer charge plus minimum billing load charge

Billing Load:

The billing load shall be the greatest of:

(1) The highest measured 30-minute on-peak KW demand during the month.

(2) 25% of the highest measured 30-minute off-peak KW demand during the month.

(3) 5.0 KW.

On-peak periods are from 8:00 A.M. to 9:00 P.M. local time Monday through Friday, except for the following legal holidays observed during these periods: New Years Day, Presidents' Day, Memorial Day, Independence Day, Labor Day, Thanksgiving Day and Christmas Day. These observed legal holidays and all other periods shall be off-peak.

Fuel Adjustment:

The energy charge shall be adjusted in accordance with the Electric Fuel Component Rider shown on Sheet No. 42-1.

(Continued)

Filed under the authority of Order No. 83-1130-EL-AIR, issued by The Public Utilities Commission of Ohio.

Data Acquisition and Analysis in Multi-Family Dwellings

Thomas S. Zawacki and Robert A. Macriss
Institute of Gas Technology
Chicago, Illinois

Introduction

Since the oil embargo of 1973, this nation has seen substantial public and private efforts in planning, research and development, and service programs to conserve energy in buildings. The weatherization programs and the utility-sponsored Residential Conservation Service (RCS) programs have been providing necessary services to primarily single-family and up to four-unit buildings. Most of this activity has addressed improvements in the integrity of the building envelope, as the most cost effective and energy conserving approach.

Parallel research and development efforts have also addressed improvements to existing space heating furnaces and boilers by retrofit, with reduction in energy losses accruing through the use of add-on equipment or controls to the space heating installation.

Weatherization programs have also been implemented in the commercial/industrial sectors through government or utility sponsored conservation services. However, there is a lack of available information on the effectiveness of specific conservation measures. Furthermore, practically no studies have been directed towards determining the effect of heating plant and distribution system retrofits on energy consumption.

Because only a limited amount of information is available[1,2] on which to base implementation of energy conservation measures, the purpose of current research is to evaluate economical retrofit strategies for the heating and distribution systems in multi-family buildings. The initial focus of the study is single-pipe steam heating systems which were installed in many buildings prior to 1950 because of ease of installation. Electrical connections were not needed because steam pressure alone was sufficient to distribute heat throughout the building. The simplist control strategies were usually used with those systems such as return line aquastats, indoor thermostats, time clocks and outdoor thermostats.

A schematic of a single-pipe steam heating system is shown in Figure 1. Essentially, when

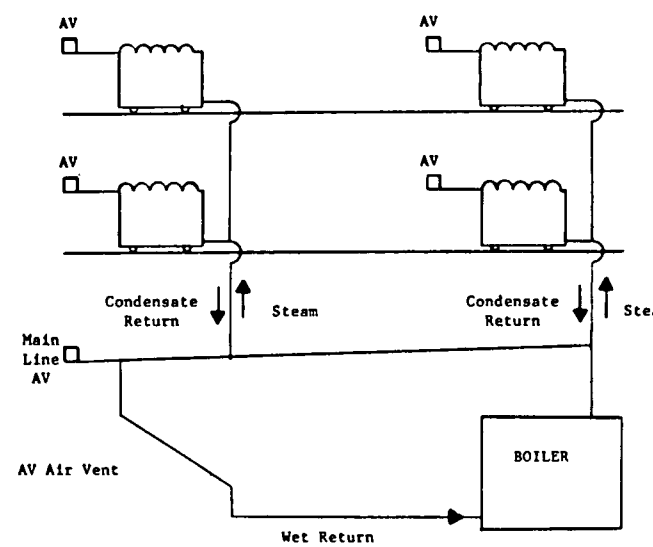

Figure 1. SCHEMATIC OF A SINGLE PIPE STEAM SYSTEM

low pressure steam is first produced in the boiler, the steam expands into the distribution lines forcing the residual air out of air vents located on each radiator unit in the apartments and in the mainline distribution system. The steam condenses in the radiators, releasing heat into the apartments while condensate is returned to the boiler by gravity through the same pipe used for distribution. Hence the term single-pipe steam. Each air vent has a thermally activated mechanism for closing a valve upon sensing a high temperature and preventing steam from entering the apartment. When the boiler shut-off, the air vents cool, reopen, and air is allowed to leak back into the system.

The major difficulty with these systems is uneven heating, because of the inability to control the amount of steam entering each radiator. In order to satisfy the heating load to the farthest apartment from the boiler, other units become drastically overheated by 10 to 15°F. Occupants then usually open windows in order to

lower temperatures into the comfort region. Because of these overshoots, gas consumption for heating may be 20% higher than could be obtained with even heat distribution and indoor temperatures throughout the building.

Because of the potential inefficiencies in these systems a number of strategies have been proposed to alleviate the overheating problem, including:

- Properly sized air vents such that heat is evenly distributed.
- Thermostatically controlled radiator vents (TRV's). TRV's operate such that if the room temperature is above the TRV set-point and the boiler is on, air is not allowed to vent and steam cannot enter the radiator and over heat the room.
- Alternative control strategies, such as multiple indoor thermostats.
- Boiler maintenance.

The approach formulated to assess the potential for the aforementioned energy conservation measures included the following steps:

- Pre-retrofit characterization
  - Historical billing data analysis
  - Indoor temperature distribution
  - Boiler part-load and steady state efficiency
- Retrofit installation
  - Boiler maintenance
  - Installation of TRV's
- Post-retrofit characterization
- Mathematical simulations by DOE-2 model, to more easily study conservation strategies that would be costly and time-consuming to actually test in buildings.

In order to properly characterize a building, primary data is needed not only to determine the status of temperature distributions and boiler efficiency but to provide input to simulation models.

Building Descriptions

Two buildings were selected for evaluation. One located in the north side of Chicago with the following characteristics:

- 13 apartments, brick construction, 3-story walk-up.
- Living space, 8800 ft^2.
- Equipped with a natural-gas fired packaged boiler, atmospheric burner, input 1,210,000 Btu/hr, controlled by time clock and return line aquastat.
- Single-pipe steam distribution system.

Another building was located on the south side of Chicago with the following characteristics:

- Six apartments, brick construction, 3-story walk-up.
- Living space, 4900 ft^2.
- Equipped with a converted coal-fired brick boiler, atmospheric burner, 850,000 Btu/hr input, controlled by an indoor thermostat and time clock.
- Single-pipe steam distribution system.

Data Acquisition and Test Results

There are a wide range of methods for acquiring information to characterize the boiler and building, from simply manually reading meters and thermometers to real-time monitoring through a computerized data acquisition system. Data should be gathered in a timely and cost-effective manner, and methods should be specified that are most appropriate for each variable measured.

Gas Consumption

Two approaches were used to characterize the energy use profile of the buildings, specifically, an analysis of historical billing data and installation of digital read-out meters to provide burner on-time and cyclic data.

Historical billing data were obtained from the local utility company. A characteristic consumption rate of about 6700 Btu/hr-°F (indoor-outdoor temperature differential) was obtained, for the 13-apartment north-side building by correlating the gas consumption with concurrent average outdoor temperature (Figure 2).

The base-load for water-heating and cooking was estimated to be about 10 therms per day while the normal heating season for a Chicago average heating season was estimated to be 10,000 therms. Note that the normalized consumption per square foot of living space is 0.76 Btu/hr-°F-ft^2, larger than the average 0.61 Btu/hr-°F-ft^2 for single family residences, indicating the high heat loss rate of the structure.

Meters were also installed and connected to the boiler to provide manual digital readouts for burner on-time and number of cycles.

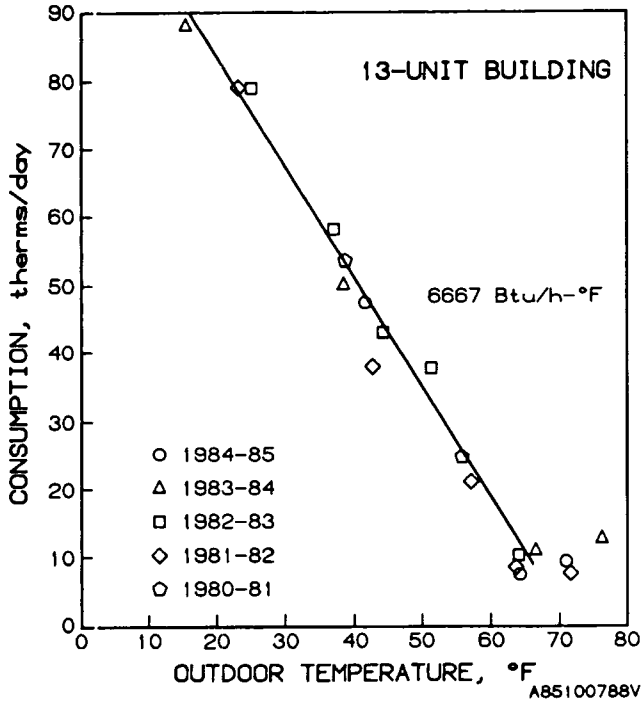

Figure 2. HISTORICAL VARIATION OF GAS CONSUMPTION WITH AMBIENT TEMPERATURE

The measured input of the boiler was determined to be 1,210,000 Btu/hr by clocking the master meter with the water heater in the off position.

Indoor Temperature

Another important characteristic of an apartment building is the indoor temperature. Identification of over or under heated areas is important in formulating proper energy conservation measures.

Because of the complexity and cost involved in attempting to monitor real-time data, a simple approach was adopted to determine the indoor temperature distributions in the buildings. Thermometers, indicating maximum-minumum temperature over a selected time period were placed in selected apartments.

The results from the north-side building for the period are illustrated in Figure 3, for the period March 15-19, 1985. Temperatures were monitored in 6 of the 13 apartments. The results indicate a wide range in temperature within the apartments, with highs ranging near 80°F and lows in the region of mid 60's. The data indicate the severity of overheating. The higher floor apartments tend to exhibit higher temperatures than those on lower floors. The outdoor temperature ranged from 18 to 50°F during the same time period.

Boiler Steady-State and Part-Load Performance

The boiler performance is another important parameter in assessing potential retrofit

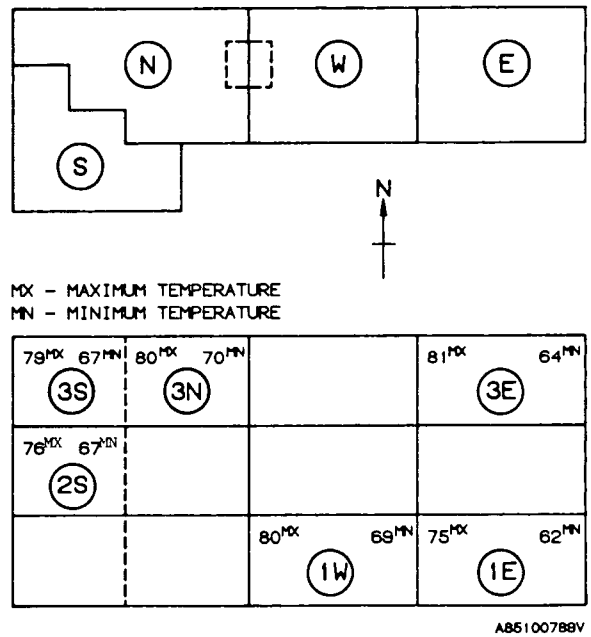

Figure 3. APARTMENT TEMPERATURE DISTRIBUTION AT NORTH-SIDE BUILDING

strategies. However, there is a lack of published information on the steady-state and part-load performance of existing boilers. The generally accepted method of determining boiler efficiency is by the flue loss method. For steady state efficiency, only spot measurements of the flue or vent gas CO_2 concentration and temperature are needed, requiring only manually read instrumentation. For part-load performance though, continuous, real-time monitoring of the flue or vent gas flow and temperature is needed to determine the transient heat loss rates when the boiler is cycling.

To facilitate continuous measurements of flow and temperature, a portable low-cost data acquisition system was constructed. The system consisted of an analog to digital converter (Remote Measurement Systems, Inc., ADC-1) and a lap computer (NEC PC-8201), with the following characteristics:

- Resolution: 12 bits
- Inputs: 16 single-ended channels modifiable from ±0.4 volts to ±2.0 volts
- Accuracy: 0.1 mv
- Storage capacity: 12,000 bytes in memory

Communication between the computer and data logger was accomplished through a standard RS-232 serial port. The method selected for determining flue or vent gas flow was the tracer gas technique. During burner-on periods, a carbon balance was used to determine flue and vent gas flows, while during burner-off periods a hydrocarbon tracer gas system was used to measure

vent gas flow rates.[3] Low-cost thermocouples were selected to monitor flue and vent gas temperatures. However, because the analog to digital converter had only a 12-bit resolution, a special amplifying circuit was devised to boost the thermocouple output to provide an adequate signal to the data logger. The test set-up is illustrated in Figure 4.

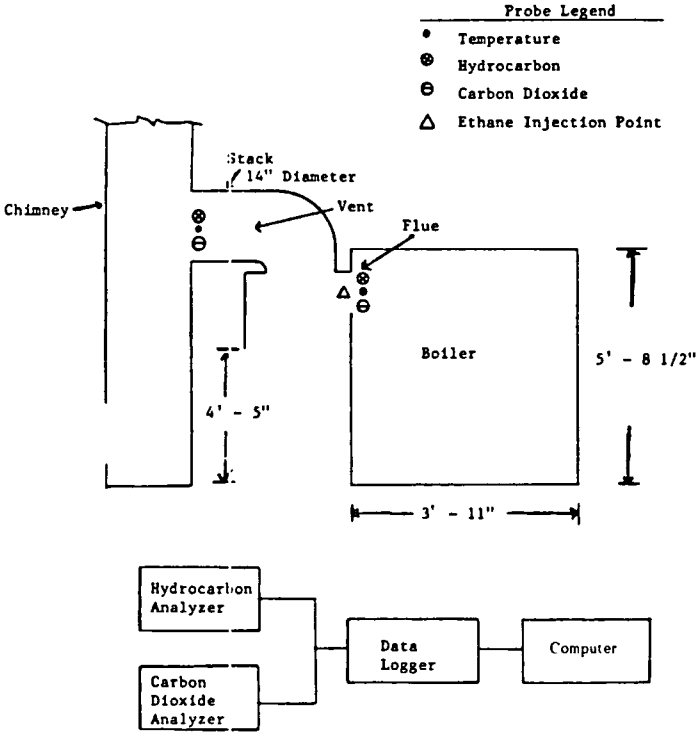

Figure 4. SCHEMATIC OF BOILER INSTRUMENTATION

To test the system a series of measurements were taken on the boiler at the 13-apartment building. The boiler was manually cycled at a rate consisting of 7.8 minute burner-on period followed by a 21.4 minute burner-off, representing a cycle rate of about two per hour. The computer was programmed to retrieve and store data at 30 second intervals when the boiler was off and at 10 second intervals during burner on periods. Boiler operation was sensed by an increase in the vent-gas CO_2 concentration to over 1%.

For the initial test series, laboratory instruments were used to determine the vent gas hydrocarbon (flame photometric) and CO_2 (non dispersive infrared, NDIR) concentrations. Low cost, portable, analysis instruments are also appearing on the market which can be used in place of the laboratory ones.

The test results are illustrated in Figures 5-8. The CO_2 concentrations are shown in Figure 5. The flue gas CO_2 concentration is about 6.5%, indicating that the excess air rate is about 72%, slightly high compared to usually acceptable limits of 40 to 60%. Note that the CO_2 concentration stabilizes almost immediately

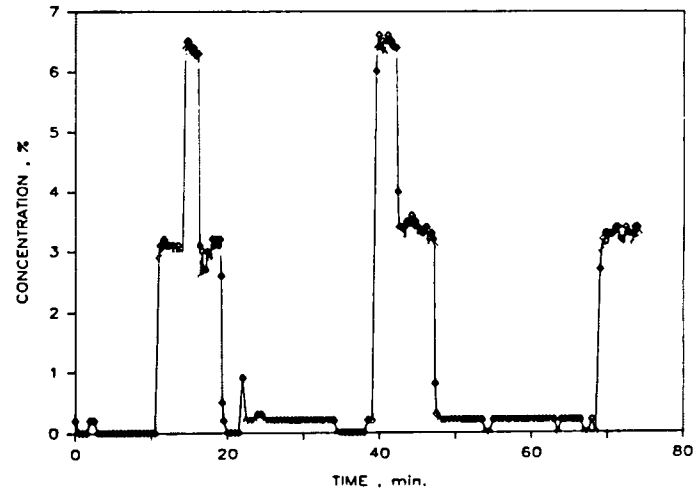

Figure 5. VENT AND FLUE GAS CO_2 CONCENTRATION WITH CYCLING

after the burner is turned-on. The flue and vent-gas temperature profiles are shown in Figure 6. For burner-on periods, the flue gas

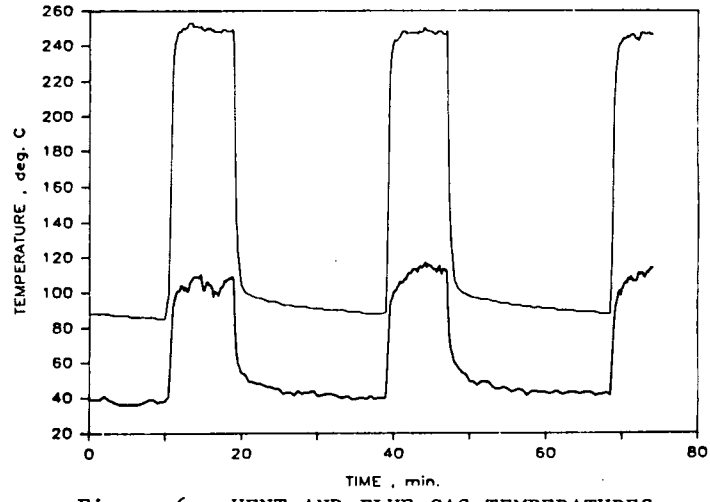

Figure 6. VENT AND FLUE GAS TEMPERATURES WITH CYCLING

temperature stabilizes rapidly at about 250°C (482°F) and the vent at 110°C (230°F). During the burner-off time, the temperatures decrease rapidly but they become stable at 100°C (212°F) and 40°C (104°F) for the flue and vent respectively.

The vent hydrocarbon tracer gas concentration profile is shown in Figure 7. The conclusion of note from observing the data is that the tracer gas concentration (340 ppm) during the burner-off period is not significantly different from the on-period concentration (290 ppm). Therefore the flow rate through the vent does not seem to change appreciably when the burner is turned-off compared to the burner on-period.

The instantaneous vent heat loss rate during cycling is shown in Figure 8. The on-period rate includes both the sensible and latent loss while the off-period values contain only sensible losses.

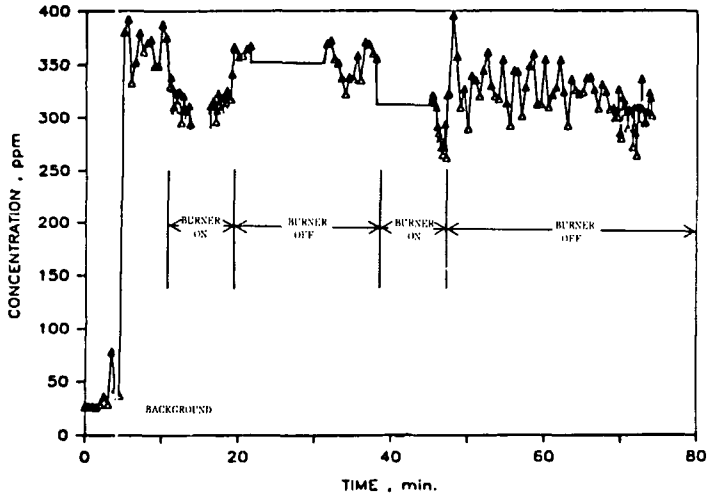

Figure 7. VENT GAS TRACER GAS CONCENTRATION WITH CYCLING

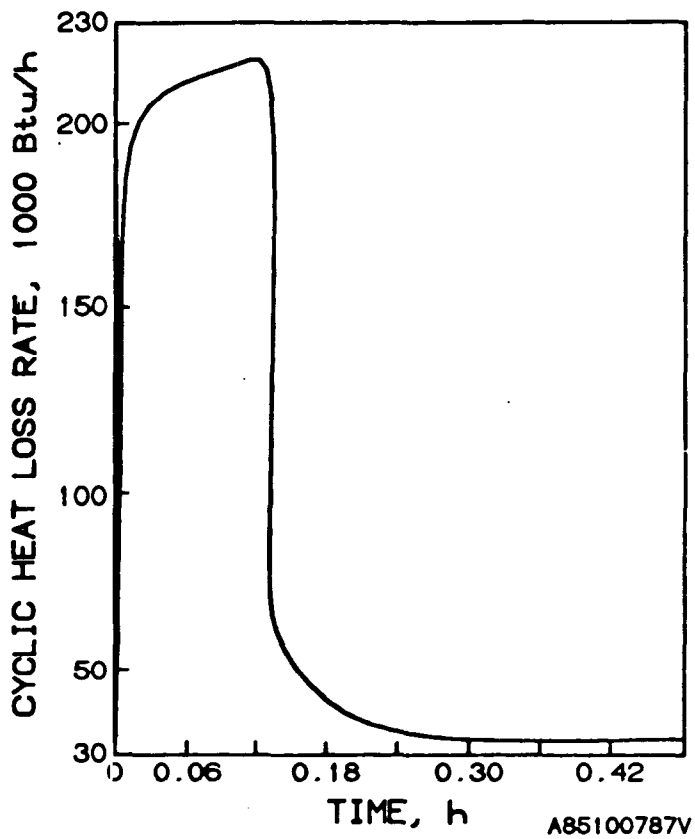

Figure 8. CYCLIC VENT GAS HEAT LOSS RATE

The steady-state and part-load efficiencies are presented in Table 1. The boiler is 79.4% efficient at steady-state and retains a high part-load value of 75% at the specified cycling rate. Pilot and jacket losses are assumed to be useful in the stated values. The additional infiltration load due to the flow of boiler room air through the vent and up the chimney is not assumed to be a burden on the boiler.

Table 1. PART-LOAD PERFORMANCE OF BOILER*
13-Apartment Building

Input	
Input During Cycle, Btu	157,300
Flue Losses	
On-Cycle Sensible Heat Loss	11,500
Off-Cycle Sensible Heat Loss	12,800
On-Cycle Latent Heat Loss	15,000
Total Heat Loss	39,300
Efficiency	75.0%

* For total cycle of 29.2 minutes, consisting of 7.8 minutes burner-on and 21.4 minutes burner-off.

Mathematical Simulations

As part of the overall approach to assessing apartment buildings the DOE-2 simulation model was selected to evaluate various control strategies. It is important, as far as data acquisition is concerned, to provide as accurately as possible the inputs to the model. Some of the important elements are outlined as follows:

- Building Structure Characteristics

  Obtained from site visits from visual inspections of the building envelop and walk-throughs of selected apartments.

- Air Infiltration Rate

  Because of the potential complex air interchange between apartments and corridors, in naturally ventilated buildings, measurement of air infiltration can become difficult and expensive. Therefore for this evaluation, estimates will be made from literature values.[4]

- Indoor Temperature Distribution

  Indoor temperature will be estimated by max-min thermometers previously discussed.

- Boiler Part-Load Performance

  Obtained from on-site measurements as previously discussed.

Future Work

To complete the current research program the following steps will be taken:

— Install retrofit consisting of boiler maintenance and properly sized air vents or thermostatic radiator valves.

— Post retrofit characterization, consisting of billing data analysis, indoor temperature measurements and part-load boiler performance

— Mathematical model evaluations.

In addition to the current research, the Center for Neighborhood Technology, assisted by the Institute of Gas Technology under sponsorship of the Gas Research Institute, is undertaking a comprehensive research effort in eleven naturally ventilated apartment buildings. Data acquisition for various parameters will be provided, outlined as follows:

- Air Infiltration

  Air infiltration rates in one building will be measured by a passive technique developed by Brookhaven National Laboratories.[4]

- Indoor Temperature

  Indoor temperature in various apartments will be continuously monitored by a hard-wired computerized data acquisition system.

- Part-Load Boiler Performance

  Selected measurements on eleven boilers by the method previously described.

Acknowledgement

The authors wish to thank the Illinois Department of Commerce and Community Affairs for their support in conducting this reasearch effort.

Summary

A variety of data acquisition methods were implemented to obtain on-site building characteristics for input into evaluations of various retrofit strategies. Manual methods were adopted for determining indoor temperature distributions (maximum-minimum temperatures) while a low-cost computerized data acquisition system was used to determine boiler part-load performance.

The important observations are discussed as follows:

- Individual apartments were found to have wide temperature variations ranging from low values in the mid 60's °F range to a maximum of about 80°F.

- Apartments on the lower floors tended to have lower temperatures than those on the higher floors. For the apartments located at the east end of the building, the first floor exhibited a temperature range of 62 to 75°F while on the third floor the range was 64 to 81°F.

- The steady state efficiency of one natural-gas fired steam boiler was found to be 79.4%. The part-load efficiency at a cycle consisting of 7.8 minutes burner-on followed by 21.4 minutes burner-off was found to be 75%. The values are based on the flue-loss method and assume jacket losses and pilot input are useful heat.

References

1. Peterson, G., "Correcting Uneven Heating in Single Pipe Steam Buildings: The Minneapolis Steam Control System," Minneapolis Energy Office, August 1984.

2. Katrakis, John T., "Documented Energy Savings in Multi-Unit Housing with Emphasis on Efficiency Improving Measures for Existent Space Heating Systems," paper presented at the panel "Energy Conservation Progress in Existing Rental and Multi-family Housing." ACEEE 1982 Summer Study; Santa Cruz, California, August 25, 1982, p. 6.

3. Macriss, R. A., Zawacki, T. S., Elkins, R. H., Cole, J. T., and Zimmer, J., "Energy Efficiency Program for Appliances: Home Heating Equipment, Furnaces and Humidifiers.

4. Dietz, R. N., D'Ohavio, T. W., and Goodrich, R. W., "Multizone Infiltration Measurements in the Homes and Buildings Determined with a Passive Perfluorocarbon Tracer Method," paper presented at the Symposium on Multi-Cell Infiltration, ASHRAE Honolulu, Hawaii, June 1985.

MINI-WORKSHOP SUMMARIES

MINI-WORKSHOPS

Following the invited presentations, participants were grouped into three simultaneous mini-workshops: A. Building Envelopes, B. Building Equipment, and C. Multi-Building Metering. Volunteers in each mini-workshop submitted abstracts and gave short presentations of their experiences, which were followed by group discussions. The abstracts are included in the proceedings.

At the end of the first day of mini-workshops, participants were asked to complete questionnaires requesting a listing and ranking of the five major difficulties they had encountered in field monitoring work and the five most important recommendations they would make to improve the effectiveness of field monitoring. The results of the questionnaires were tabulated separately for each workshop and presented to the participants the following morning. A discussion was then held. Rankings and summaries for each workshop follow.

Workshop A: Building Envelopes

Participants	
National Laboratory Staff	9
Private Consultants	4
Utility Representatives	1
State Agency Representatives	1
University Staff	1

Major Difficulties/Problems/Issues Encountered in Field Monitoring Work

Categories	Score
Hardware	70
Planning/Design	36
Analysis	26
Goals/Values	25
Management	25
Reference Materials	11
Operation	8
Software	0

Most Important Recommendations to Improve the Effectiveness of Field Monitoring

Categories	Score
Planning/Design	40
Management	21
Analysis	15
Goals/Values	10
Hardware	10
Operation	7
Communication	6
Funding	5
Software	1

SUMMARY OF DISCUSSION WORKSHOP A

Hardware: Nitty gritty technical issues dominate conversations, primarily because of the number of details that must be dealt with; hardware issues, although not completely resolved, appear to be manageable and eventually may achieve a standardized status; hardware and software issues have been the focal point of many monitoring efforts to date; reliability, maintenance, calibration, and dependability dominate hardware concerns.

Management: Planning and design of programs or projects, management of programs and projects, analysis of data, and information and goal setting were the issues that were most out of the control of the group; program goals need to be defined more clearly; what questions will the data answer? programs need to be designed to answer specific questions; project planning is too rushed, not enough time is allocated; it is easier to recover from bad analysis than from bad data; analysis should focus on answering questions relevant to the original goals and objectives of the project.

Workshop B: Building Equipment

Participants	
Utility Representatives	12
Private Consultants	6
National Laboratory Staff	5
Manufacturers	4
University Staff	3

Major Difficulties/Problems/Issues Encountered in Field Monitoring Work	
Categories	Score
Hardware	85
Planning/Design	75
Management	63
Operations	61
Reference Materials	24
Standards	13
Goals/Values	13
Analysis	12
Software	2

Most Important Recommendations to Improve the Effectiveness of Field Monitoring	
Categories	Score
Operations	95
Planning/Design	51
Management	50
Hardware	28
Reference Materials	26
Standards	24
Analysis	10
Goals/Values	8
Software	2

SUMMARY OF DISCUSSION WORKSHOP B

ISSUES

Hardware: Unreliable; not compatible; faulty specifications; high costs.

Planning: Need more of it; need to identify focused objective; anticipate problems; need "model" for planning.

Management: More coordination; better communication; better cost control; more realistic budgeting support and leadership.

Operations: Set yourself up to avoid problems; be thorough; keep good records.

RECOMMENDATIONS

Operations: Keep good records; use redundancy; reduce data as soon as possible; check data frequently.

Planning: Do it thoroughly; anticipate problems; tailor systems to needs.

Management: Consider trade-offs between desires and costs; do not undertake underfunded jobs.

Reference Materials: Establish data base of performance information; identify proven data acquisition systems; handbooks.

Hardware: Use off-the-shelf equipment and systems; avoid state of the art.

Workshop C: Multi-Building Metering

Participants	
Manufacturers	7
University Staff	3
Private Consultants	2
Utility Representatives	1

Major Difficulties/Problems/Issues Encountered in Field Monitoring Work

Categories	Score
Planning/Design	31
Operations	30
Common Data Bases	22
Forums/Conferences	10
Management	8
Protocols/Standards	6
Reference Materials	5

Most Important Recommendations to Improve the Effectiveness of Field Monitoring

Categories	Score
Hardware	75
Management	33
Analysis	31
Planning/Design	20
Operations	9
Goals/Values	5
Software	5

SUMMARY OF DISCUSSION WORKSHOP C

ISSUES

Hardware: Need low-cost, nonelectrical sensors; unreliable communications with remote logging systems; need relatively low-cost, near-real-time infiltration sensors (15 min or less); sensor cost and failure; sensor performance not matching manufacturer's specifications; reliability of purchased hardware and software; lack of manufacturer support; integration of off-the-shelf equipment; delivery times on equipment; equipment installation.

Management: Lack of commitment to long-term efforts; consistency of funding to maintain monitoring team continuity; holding down costs; takes longer than anticipated; a multitude of players—utilities, contractors, phone companies, homeowners, regulatory bodies—each with the power to hold up data collection; inability to correctly estimate schedule causes contracting/management friction; controlling computer specialists to keep system simple.

Analysis: Developing data analysis procedures as you go; getting time to adequately check data with many simultaneous installations; incomplete and questionable data; data verification, maintenance, and documentation.

Planning: What data are necessary to meet objectives; determining representative samples with occupants; determining proper team; deciding between field testing vs lab or unoccupied building testing for objectives.

Operations: Dealing with lower-level electrical inspection authorities; power outages; maintaining system in working order; maintaining field-to-central data location communications; training of electrical installers.

Goals/Values: Customer acceptance; are results ever used; how to inform about results.

Software: Cost, reliability.

RECOMMENDATIONS

Planning: Think before measuring; develop clear and concise project goals and objectives before metering; limit data collection to satisfy objectives; spend as much time planning, analyzing, and writing reports as in metering; plan analysis procedures and methods before metering; be prepared to analyze occupant behaviors and lifestyles; do not focus too much attention on hardware, for it is just a means to an end.

Operation: Develop timely data analysis procedures (e.g., to identify problems); check for errors continuously; instruct field crews and check their work.

Common Data Base: Need for common data bases and data access facilities; need for compatible and powerful analysis capabilities with the common data bases; develop shared data bases among utilities, consultants, researchers, etc.

Forums/Conferences: Central mode for information sharing such as a computer bulletin board; hold annual conference; improve communications on the best selection of sensors, equipment, and software; establish formal links among large-scale monitoring teams.

Management: Stronger management support; more consistency in management personnel.

Protocols/Standards: Develop protocols and standards in a number of areas — project planning, management and procedures, installation, hardware and software, data analysis, report formats, etc.; when developing standards, recognize differences between large-scale metering needs (utilities) vs in-depth research metering of a few buildings (universities and other researchers).

Reference Materials: Describe the details of systems and methods in appendices and state main results in a few pages; publish a nontechnical, how-to-do-it manual intended for management.

MINI-WORKSHOP ABSTRACTS

A. BUILDING ENVELOPES

Oak Ridge National Laboratory Roof Thermal Research Apparatus

George E. Courville
Oak Ridge National Laboratory
Oak Ridge, Tennessee

BACKGROUND. The Roof Thermal Research Apparatus (RTRA) is a conditioned 10 by 40 foot facility with a flat roof that contains four replaceable panels. Roof systems of different composition are placed in these panels for analysis of thermal and hygric performance.

DAS PLANNING. Roof performance analysis requires the time history of temperatures, heat flows, moisture content, panel weight, and outside and inside environmental conditions. This means about 100 channels of hourly data over long periods of time must be recorded, stored, and readily retrievable. In addition, the facility has no office space so the DAS work station is in a building about 100 yards to the south. It was anticipated that analysis would be carried out with personal computers (PC's) at the DAS work station and in staff offices which are scattered at several sites at the Laboratory.

DAS SYSTEM. The DAS at RTRA consists of an Autodata Ten/10, several Autodata Netpacs, an IBM PC, and a DEC PDP-11/34. Autodata equipment was chosen because it satisfied the need, many of the components were available at the Laboratory, and the instrumentation staff had considerable experience with its operation. The Netpacs (distributed data acquisition networks), each handle 20 channels of input from thermocouples, RTDs, high or low voltage signals, pulses, or contacts. The five installed Netpacs are sequentially scanned by the Ten/10 unit, located at the remote work station, over a single hard-wired line. Data is averaged and converted to engineering units by the Ten/10 and sent directly to the PDP-11 for storage through two 202T modems hard-wired via a telephone cable. Finally the IBM PCs can communicate with the PDP-11 via 212A modems using dial-up capabilities. One PC may also be used to log data directly for short term experiments.

OPERATING EXPERIENCE. The system has been working for about a year with no serious deficiencies. Lightning has shut the system down once, several of the Netpacs and the Ten/10 have developed temporary problems, and the PDP has been down for routine maintenance. These problems have resulted in a loss of data for short periods (one to several days) which is not crucial for these types of tests. The analysis mode developed at RTRA has been to recall data in one week blocks from the PDP to an IBM PC where it is cleaned up and put on diskettes in a standard format. These blocks are determined by studying a continuous tape chart recording of outside air temperature to identify time periods of special interest. Analysis has mostly been carried out with LOTUS software.

COMMENTS/ISSUES. Since the lightning shutdown the electrical grounding scheme has been improved, in part by adding metal oxide varistors in the ground path and by adding a good electrical ground between the work station and the RTRA.

It has also been found necessary to have available spare parts for all the critical DAS units. More recently we have been considering elimination of the PDP as the storage system because of the availability of high capacity hard disk storage for the PCs. This would reduce operating expenses because PDP storage and use is a direct charge. We have, however, not yet found an adequate multi-tasking package for IBM PCs that will allow us to use the machine routinely while it simultaneously takes data from the Ten/10 for storage.

A Program Aimed at Accelerating the Development of Passive Solar Design and Technology

John Palmer
Databuild Limited
Birmingham, England

EPA's are a new approach in the U.K. to the problem of increasing the awareness of passive solar design in the building industry.

The EPA programme has been devised to complement the long term research efforts of the scientific community by adopting a comprehensive approach to the evaluation of passive solar buildings. It includes not only energy performance, but also studies occupancy and operational factors. Considerable emphasis is placed on early presentation of findings in an attractive format. Up to 40 passive solar buildings are to be assessed in a three year period.

A strategy has been evolved which encompasses studies on both domestic houses and non-residential commercial buildings. This strategy has several elements:-

- It recognises the finite resources which can be committed to any one building.
- It standardises the formal relationship with the building owner, the testing and monitoring procedure and the reporting format.

  Since it is directed primarily to the building industry and not the research community, it relies on consensus techniques with a high credibility.

  It considers the reactions of the building occupants to the quality of their environment.

An EPA has three components:-

- Monitoring the test building.
- Modelling the test building.
- Modelling a reference building(s).

The monitoring of whole buildings will only apply to domestic houses and will be at a level sufficient to produce a monthly energy balance, using the "subtractive" method to obtain the passive solar contribution. This will be done for a twelve month period to produce data for all seasons, and annual performance indices which could be compared with standards and other buildings. The occupants will also be involved in reporting on the building performance over the whole of this period.

For commercial buildings, monitoring will be targeted upon a particular aspect of the passive solar feature which is of interest. This could be temperature stratification in an atrium over a particular period of the year, for example. In commercial buildings, more use will be made of the questionnaires and interviews that will also be used on the housing occupants. The occupants' reactions to passive solar buildings are of great importance if such designs are to be successful, and the monitoring will be made more effective by using the occupants' reactions as a measure of building performance.

Modelling of the building under consideration will be done to produce the same performance indices that are generated by the monitoring. For houses this will use a dynamic mathematical model as a design study yielding performance indices under standardised conditions.

For commercial buildings where such models are less applicable, whole building energy use will be modelled using simpler techniques, alternatively sophisticated models may be used to aid evaluation of part(s) of the building's performance. As for houses this modelling reflects the design study that could have been used in design of the building.

Widely accepted costing models will also be used on the test buildings to produce capital costs based upon standardised and comparable techniques - again simulating design conditions.

Reference buildings will be specified which are equivalent to the test building but without the passive solar feature. For houses these will be chosen from nationally recognised stereotypes as used in Government brochures on energy efficiency. The performance indices of these buildings will then be modelled for direct comparison with the test house performance indices. A consensus U.K. housing energy model will be used with internal gain and climate data as measured for the test house.

In commercial buildings published figures of normal energy use for such a building will be taken as a guideline for comparison, together with currently widely used energy targets for new conventional designs.

Reports will be short, standardised and direct with a high standard of graphic design. The aim is to convey as much information as successfully as possible by the use of photographs, drawings and graphs. About six A4 sides are required to deliver all the relevant information. Back-up reports in more detail will be available for those with a deeper interest in the building in question.

The EPA programme will shortly begin field trials of those methodologies. Since they are all based on proven techniques this is primarily an exercise of integration and logistics. It is anticipated that full EPA's will commence around Spring 1986 with first reports appearing a year later.

The EPA programme is seen as providing a focus for U.S./U.K. collaboration and for participation in IEA Task XI as lead country for the Case Studies sub task. It will generate experience and interest within the U.K. pertinent to such international collaboration as well as providing material for contribution to these initiatives. However the development and timescale of the EPA programme in such that it can further benefit from experience in other countries

EPA Sponsors:

ETSU, Harwell	0235 834621

EPA Contractors.

Ostabuild Limited	021 236 6477
UWIST	0222 425888
EPA Timescale	1985 - 1988

An Experiment with a Remote Data Sharing Network

Charless W. Fowlkes
Fowlkes Engineering
Bozeman, Montana

Fredrick M. Cady
Micro Electronic Systems
Bozeman, Montana

This paper describes the initiation of an energy monitoring experiment in which the experimental, real-time, site data is available to anyone having a personal computer, modem, and a telephone. We propose that the existance of this demonstration facility will have a variety of educational benefits.

A demonstration data acquisition system has been set up on a residence in Bozeman Montana. This building has no furnace and uses passive solar for 75% of its space heating requirements. Twelve sensors which measure several temperatures, humidity, insolation, wind speed, etc. are connected to the remote data acquisition system.

Each eight seconds the data acquisition computer measures the outputs of twelve sensors and at the end of each hour, the (450) samples from each sensor are averaged and saved in memory. The computer has enough internal memory to contain the last two weeks' hourly data at any one time. The User can call this system at any time and command the data acquisition computer to send any of the monitoring data presently in it's memory.

This paper describes the sensor arangement and the commands that are sent to the Data Share system to make it transmit it's data. Examples are given to explain the protocol and the format of the data.

DAS Problems in the Warm,Humid Climate

Ralph F. Jones
Brookhaven National Laboratory
Upton, New York

Background

Brookhaven National Laboratory and the Florida Solar Energy Center are presently monitoring the thermal performance of an innovative energy efficient residence in Florida with vent-skin roof and walls and radiant barriers.

Objectives

To evaluate the whole house thermal performance and develope a protocol which could provide for comparative analysis of other residences in a similar climate. In addition this this, the need for comparative indices should be considered.

DAS System

DAS systems in this area need to contend with the dominance of the cooling load and the fact that with reduced operation of the vapor compression device, latent loads are not efficiently lowered. The measurement of moisture therefore becomes of prime importance. Enthalpy measurement with chill mirror hygrometers on each end of the unit combined with a one time air-flow rate and condensation gauge perform this function. Aspirated wet bulb devices and dew point sensors measure internal and external relative humidity. In order to properly measure the thermal load, IR radiometers and a Funk-type pyrradiometer is used to measure thermal and solar radiant from the roof, the sky and the sun. A rake of eight thermocouples provides temperature measurements through various layers of vented roof construction.

Comments, Issues

It has become important to evaluate the absorption and desorption of moisture with the building materials and furnishings as well as the air. This data (MADAM) needs to be included in a predictive model especially when nighttime passive cooling is being evaluated. It is also necessary for themodel to know when it is raining so exterior surfaces can be set to wet bulb temperature to evaluate this cooling effect. A standardized monitoring protocol with some comparative indices which take into account solar gain and moisture are needed badly.

Whole-Building Performance

David T. Harrje
Center for Energy and Environmental Studies
Princeton University
Princeton, New Jersey

DESCRIPTION: Multifamily buildings represent one portion of the building sector that has been poorly documented from the standpoint of whole building performance. Building envelope, central equipment, control systems and the varied needs of the occupants are all part of the total energy picture.

OBJECTIVES: (1) Demonstrate where energy is being wasted in typical multifamily buildings. (2) Document the detailed losses from energy distribution systems in the buildings. (3) Provide ECO strategies for retrofit of the buildings including best ways to operate the space conditioning systems. (4) Document energy savings based upon implementation of ECO's through the complete seasonal cycle.

TECHNICAL STATUS: Two midrise multifamily apartment buildings are being monitored by powerline carrier instrumentation, providing detailed building information to a utility room located microcomputer. Modems allow the buildings to be accessed daily. Within the buildings a wide array of sensors provides information on individual apartment temperatures (20 out of 60 apartments) natural gas and electric use, key boiler parameters and details in the distribution systems for heating and domestic hot water. Local weather conditions are measured in both buildings.

OPERATING EXPERIENCE: Building one has been on line for almost two years with sensors reporting more than 95% of the time. Building two is just coming on line and emphasizes the energy distribution systems.

CONCLUSIONS: Unattended operation of the powerline carrier microcomputer based data systems has been demonstrated. The data from building one emphasizes the importance of control of space conditioning. The monitoring system's ability to rapidly scan temperature and system conditions allowed feedback to operations personnel and significant savings in energy use (15-40%). The information is available 24 hours a day and is called up from our lab 45 miles away.

Berkeley Solar Group/Sheraton Place Garden Court Light Monitoring Project — Phase I

James R. Augustyn
Berkeley Solar Group
Berkeley, California

BSG/Sheraton Palace Garden Court Light Monitoring Project, Phase I

Monitoring of light and comfort conditions in a 100 year-old 110 x 80 foot skylight ornate indoor historical landmark now used as a restaurant and multi-function meeting hall.

The project objective was to collect sufficient data to "tune" computer and monitored physical models of the room which are to be used in assessing the impact of erecting a large hotel tower directly to the south of the existing skylight dome.

Thirty-two (32) light and temperature sensors were used along with four data- loggers to record 15 minute averages of minutely scans over a two-month period.

Key project planning issues involved how to quantify and present the changes in lighting and comfort in the space as a function of variable construction possibilities, as the thrust of the entire project was to demonstrate how the new construction would effect the "quality" of the light and beauty of the space.

Significant constraints were associated with how to place sensors in the room without imposing an aesthetic affront to the restaurant patrons or getting in the way of hotel operations associated with setting up special table layouts for special functions and returning to the standard restaurant layout each morning.

The monitoring went very well except for some problems with improperly designed shadow bands which were borrowed (to save money), from a local university.

Conclusions/lessons learned: never let inexperienced people establish budgets for a complex monitoring project, and always allow time to thoroughly plan your project beforehand and to test all sensors and data acquisition systems prior to installation.

Short-Term Tests to Measure Building Thermal Parameters

Jay D. Burch
Solar Energy Research Institute
Golden, Colorado

Background

The Solar Energy Research Institute (SERI) is developing a methodology to determine building thermal parameters {B} from short-term data. The {B} are inputs to a dynamic thermal model, which is then exercised to answer the questions being asked, such as: 1) long-term energy consumption (rating); 2) long-term savings from retrofits, under "standard" occupancy; 3) net efficiency of heating system; and 4) diagnosing the shell as is compared to as designed.

Advantages of this approach

- The monitoring is completed in a few days to a few weeks.
- The building thermal properties are cleanly separated from the extrinsic conditions (set points, internal gains, "anomalous" weather, etc).
- In EMCS contexts, a continuous on-line diagnosis of HVAC can be done.

Problems

Regression of a dynamic model's parameters from performance data is not new. However, it has not been widely done because the parameters are generally ill-determined, i.e., they show unacceptably large variation as different time periods are chosen (errors are large). SERI is developing two solutions to this problem:

a. Control the internal gains for several days to <u>stress</u> the problem to bring out clear, unambiguous signal for parameters. Several gain levels, one of which fluctuates sinusoidally, has been used with very successful results.

b. Search for time-regions where the ratios of forcing functions guarantees a stable solution. This approach has not been fully tested.

A second problem is that the model's parameters (particularly solar parameters) vary seasonally, and this change must be modeled (e.g., shading from overhangs). A solution SERI has implemented is to normalize a radiation transfer model (based on building plans) to the measured parameters, and extrapolate with that model.

Ground Water Heat Pump Monitoring

Robert A. Blake
The United Illuminating Company
New Haven, Connecticut

PROGRAM DESCRIPTION: A ground water heat pump system in a residential home is being metered and monitored to determine the heat pump's operating efficiency during the heating and cooling modes. Two methods are being used to calculate the system's efficiency: one using the change in the air temperature and the other using the change in the ground water temperature.

SYSTEM DESCRIPTION: The heat pump system consist of two heat pumps. Each heat pump supplies heating and cooling to different zones of the home. In addition, each heat pump has a desuperheater, to use the superheat proportion of the freon cycle, to heat domestic hot water. The heat source (or heat sink in the summer) for the heat pumps comes from a well and an underground storage tank. During the winter and summer months, approximately two thirds of the water flow comes directly from the well while one third comes from the storage tank. During the spring or fall, when cooling is done during the day and heating at night, the water flow comes only from the storage tanks.

METERING DESCRIPTION: Electric pulse initiating meters are being used to individually record, on magnetic tape, the electric demand and usage of each heat pump, the well pump and the circulating pump. Strip chart recorders are being used to measure and record the return and supply air temperatures and the supply and exit ground water temperatures. Water flow rate indicators (GPM) for each heat pump were installed during the original system installation. Total water flows were calculated by multiplying calculated run times by the flow rate for each heat pump. Air flow rate measurements (CFM) for each heat pump were made by the contractor after the system installation. The air flow rate and the calculated run times were used to calculate the total air flow.

RESULTS: For the heating season, the average COP was 2.3 to 2.5, using the air methodology. The water methodology produced COPs lower than the air methodology by approximately a unit of 1. Data from the air conditioning season is still being analyzed.

CONCLUSIONS: It was concluded that using the change in air temperatures to calculate the heat output is the preferred method. Using the change in water temperature does not capture the heat input from the compressor and fan blower motors. In addition, the change in the water temperature is smaller than the change in the air temperature, thus increasing the significance of measurement errors.

Performance Comparison of Air- and Ground-Coupled Heat Pump Systems

Jerald D. Parker
Oklahoma State University
Stillwater, Oklahoma

* BRIEF DESCRIPTION OF MONITORING PROJECT: This project involved the monitoring of the performance of heat pump systems installed in three identical, small residences in Perkins, Oklahoma. Data were collected every 15 minutes to determine weather conditions, internal temperatures, energy demands, and system performance.

* DATA ACQUISITION OBJECTIVE: The objective was to compare the performance of gound-coupled heat pump systems with conventional air-systems, particularly with regard to electrical demand reduction.

* TECHNICAL APPROACH: Data acquisition included measuring 61 different parameters; conditioning, converting, and storing those data in useable form every 15 minutes; transmitting those data 11 miles over telephone lines to an office on the Oklahoma State University campus and ultimately, transfering the data to the IBM mainframe on campus. All of the above procedure took place automatically, requiring little maintenance or intervention.

* OPERATING EXPERIENCES: The system provided data reliably and continuously for analysis within 24 hours of collection, greatly reducing operator time and trouble. Since the automatic data were normally transferred to a mainframe during the night or weekend, the session cost was greatly reduced.

* CONCLUSIONS: Although the system operated satisfactorily, there were several specific problems with the programs that could be fine tuned to have provided even greater reliability.

  General recommendations regarding the entire system that could have been implemented should a project of this nature be customized for another application include: complementing the hardware with additional memory using a compiled language for the high level language main programs, eliminating the need for much of the complex assembly language subroutines used in the system; and finally, adding additional hardware to allow for two RS232 ports connected to both the Bizcomp and either the A235 or the Vadic for complete system independence.

  A major problem in the project was the large variability of performance due to the occupants. This was particularly significant in these small, well-insulated homes, where interval loads were often the dominant factor. The frequent adjustment of thermostats by one occupant and the large variability in number of occupants made it difficult to compare performance and forced the use of normalizing parameters and correction factors.

PREP — Project on Restaurant Energy Performance

Charles N. Claar
Pennsylvania State University
University Park, Pennsylvania

DESCRIPTION: Seven restaurants in Pennsylvania, New Jersey and Virginia were monitored to determine end-use energy consumption. Each site had a unique instrumentation plan for measuring individual loads and groups of like loads. In addition each facility had a mini weather station to obtain micro-climate data. The buildings were free standing, constructed in the period 1973-1976 and all had HVAC systems.

OBJECTIVES: (1) To determine how energy was used in restaurants. (2) To acquire data to validate existing computer software used to estimate building energy consumption. (3) To develop energy conservation strategies for restaurants.

TECHNICAL APPROACH: Thirty restaurants were surveyed for monitoring suitability and seven selected to participate. Each restaurant had between 18 and 33 utility grade watthour and gas meters installed. The meters were equipped with pulse initiators so that the micro-computer data acquisition system could record digital data. The weather information was acquired in analog form and converted to digital form by the micro-computer. The data was stored in an EPROM. Each facility was called every day by a host computer and the data transmitted to Penn State. To validate the data it was converted to energy use in 15-minute intervals by day by meter point. The information was evaluated for accuracy and acceptably on a daily basis. Additional accuracy checks were made on a monthly interval by verifying computer acquired data against manual reading of the on-site meters. Every month reports of energy use by end-use category were prepared in KWH, CCF and MBTU's; by the day and for the entire month. The daily use of energy by each meter point was also reported, as was the customer count and heating and cooling degree days. Except for limited use of "LOTUS 1-2-3" all data reduction and analysis was done with software uniquely developed for this project. The critical data analysis software was developed before data archiving was started. All analysis was done on the home computer, a 64K RAM, dual disk drive, Cromemco CS-2.

OPERATING EXPERIENCES - The data collection rate for the project was 87.8%. Most of the lost data was due to verifiable and suspected power transients/disturbances including lightning. The data acquisition was originally designed to be using diskettes; however, this was abandoned when it was determined that restaurant ambient, airborne dirt caused too many data quality/acquisition malfunctions. Maintenance of all the operational equipment far exceeded original expectations. Regular monthly maintenance and meter reading trips had to be scheduled as well as unscheduled trips to repair failed critical equipment in order to assure an excellent data collection rate. The sensors/meters had an outstanding operational record while on site interfacing and computer data acquisition equipment had lower reliability experiences.

CONCLUSIONS: The use of utility grade meters as back-up for computer acquired data greatly enhanced the data collection, verification and validation. Micro-computers

used for data acquisition need better transient surge protection as well as some short term power carry over features for very short electrical outages. In this project sensor/meters produced both analog and digital data, projects of this type should wherever possible use either system of data acquisition but not both. The data acquisition software was debugged before the start of data archiving, this facilitated the data validation process leaving only software enhancements necessary as the project progressed.

Assessment of Field Performance Data on Unitary Heat Pumps

James C. Burke
Arthur D. Little, Inc.
Cambridge, Massachusetts

BACKGROUND: Prediction of Heat Pump installed performance is complicating by dynamic losses due to cycling and frosting/defrosting and it is not clear whether existing prediction methods are adequate. Although many heat pump field test programs have been conducted in recent years there is concern as to whether the data is sufficient to satisfy user needs.

OBJECTIVES: (1) Establish the status of existing data on heat pump field performance (both quality and quantity of data base). (2) Compare the existing data with user needs. (3) Determine what types of additional tests are merited.

METHODOLOGY AND STATUS: The work plan consists of four tasks: 1.0 - Field Data Collection; 2.0 - Survey of User Needs; 3.0 - Summary and Evaluation of Field Data; and 4.0 - Define Data Needs and Formulate Test Program. Tasks 1,0, 2.0 and 3.0 have been completed and the results summarized in a Task 3.0 topical report which is in final review. Work on Task 4.0 is underway.

RESULTS: Over 100 individuals in 80 organizations (about 40 utilities, the remainder being manufacturers, government agencies, universities, installers, associations, contractors and others) were contacted relative to field programs and/or user needs. The key reasons cited for needing field test data were load management, consumer information, product design and model validation. The major types of thermal performance data needs reported involved energy consumption and savings (HSPF and SEER), load profiles, and information on advanced designs. Also reliability and maintenance were of great interest. Thirty-six programs involving over 600 heat pump units were identified and categorized in three levels based on the parameters measured. Level I programs (over 400 units) measured energy input normally using utility load research methods to obtain semi-quantitative performance information and "hands on" operating experience. In Level II programs (almost 150 units) both energy input and output were obtained allowing estimation of HSPF. However the output determination methods (usually flip-flop or estimation of building load) involved 10 to 20% uncertainty in the heating mode and were not normally suitable for cooling. Level III programs (less than 50 units) involved measurement of input, output and at least some isolation of dynamic losses due to part load cycling and frost/defrosting. Generally these programs involved more careful control and measurement of climatic, installation, and operational test conditions than the prior levels and the method of output measurement (normally duct enthalpy) were more accurate than for Level II although determination of cooling load continued to be a problem. Limited Comparisons of experimental performance factors with ARI 240-81 predictions indicated good apparent agreement (within $\pm$ 10%) however, questions remain as to the general applicability of this method.

PRELIMINARY CONCLUSIONS: The data base on heat pump field performance is large but uneven in terms of completeness and quality. Energy input data is abundant and frequently reliable but the results were seldom either statically valid or easily generalized. A considerable amount of HSPF (and much less SEER) data is available although comparison with analysis is limited. Relatively little detailed data on dynamic losses is available and even less comparison with analysis. Unresolved experimental problems include optimization of flip-flop techniques, practical field measurement of latent cooling and means of detecting performance degradation.

Thermal Ice Storage Test Facility

Richard L. Hobson, Sr.
Baltimore Gas and Electric Company
Baltimore, Maryland

DESCRIPTION: The CALMAC thermal storage system was installed in the basement of our Headquarters building in June of 1984. Instrumentation was installed in November, 1984. The CALMAC thermal ice storage system consists of two 60-ton reciprocating chillers for making ice, 24 CALMAC thermal storage tanks (totalling 1390 ton-hours of storage capacity, a plate and frame heat exchanger, and four pumps for circulating the condenser water, building water, and the water/glycol solution.

OBJECTIVES: (1) Determine the reliability of the thermal storage system and its parts. (2) Analyze the performance of the system and its parts. (3) Determine the validity of manufacturers claims on performance and reliability. (4) Calculate operating costs of the system and estimate operating cost savings, if they exist. (5) Supply building operating personnel with metered data, and submit proposals for optimal operating performance.

TECHNICAL STATUS: Metering of the thermal ice storage system includes kilowatt-hour metering of the chiller, pumps, and total building. Btu meters are used to determine the amount of heat dumped to the cooling towers, the cooling supplied to the storage tanks, and the cooling supplied to both sides of the heat exchanger. Several RTD's are also in place for measuring temperatures throughout the system. All data is pulsed in fifteen minute increments to 4-track magnetic tape recorders, translated, and then finally stored in our LODESTAR data base management system.

OPERATING EXPERIENCE: No problems with the data acquisition system have been experienced since the installation of the recorders. Collected data has been evaluated through August of this year. Data has allowed us to make recommendations for performance improvement, recognize malfunctions in equipment, evaluate performance of the compressors and heat exchanger, and calculate operating cost savings.

CONCLUSIONS: The recorders used have operated flawlessly since their installation. The only problems have been that of time. Currently, from time of tape pick-up to time of data availability is four to six weeks. This can result in significant loss of data in the case of instrumentation or equipment malfunction.

Performance Evaluation of Zoned Ductless Heat Pumps Relative to Zoned Electric Resistance Heaters in Two Residences

Gordon M. Reistad
Department of Mechanical Engineering
Oregon State University
Cornwallis, Oregon

OBJECTIVE: The objective was to determine the relative performance of zoned ductless heat pumps and zoned baseboard electric resistance heaters for two residences, on both a daily basis and a seasonal basis.

TECHNICAL APPROACH: Five zones were identified in each of two residences located next to one another. Each zone was heated by both the heat pump and electrical resistance heaters. Data were to be taken during the heating season with alternate days being heated by the heat pumps and the electrical resistance heaters. Two data acquisition systems were used: a standard kilowatt hour meter cartridge system; and a microcomputer based system designed specifically for the project which was to measure (i) power (energy), (ii) outside temperature and humidity, (iii) inside humidity and 5 zone temperatures for each residence, and (iv) status sensors.

OPERATING EXPERIENCES: There were substantial difficulties with the data acquisition from this test. Although the standard kilowatt hour cartridge system operated properly and gave reliable power (energy) consumption data, the data from the microcomputer system was not reliable. Powerline fluctuations were identified as a major cause of unreliable and lost data in the microcomputer based system. There was an absence of data for a large portion of the testing period. Also, the status sensors did not work which prevented the determination of what systems and/or zones were in operation. There was also a problem with the switching from one type of heating system to the other. This was planned to take place about 2AM, but because of noise from switching, the time was changed to about 3 PM; unfortunately a time which coincided with people coming home and (frequently) changing the thermostat setting. Because of a variety of factors there was substantial manual switching that was not accurately indicated. From the data it was also evident that the thermostat settings of the electrical resistance heaters were different than those of the heat pump units. Because of the thermal capacitance of the houses, this resulted in an increased load for one type of heating system and a decreased load for the other type of heating system.

CONCLUSIONS:

* The data acquisition system must be designed to withstand powerline voltage fluctuations.
* Data must be reduced and and reviewed as the test proceeds. Data evaluation should never be more than two weeks behind collection.

* A detailed log book with date and time noted must be kept.
* Both heating systems must be actuated with the same thermostat.
* Status sensors caused a major difficulty, they could be readily backed-up with simple sensors such as thermocouples near the various heating elements.
* The switchover from one heating system to another should occur when the load on the system is small and the thermostat is not changed.
* In addition to the normal household operation the residence should be operated on a programmed schedule for both heating systems.

Heat Pump Water Heater Efficiency Measurement

Robert A. Blake
The United Illuminating Company
New Haven, Connecticut

PROGRAM DESCRIPTION: Six heat pump water heaters (HPWH), containing 3 different brand-types, were installed in residential homes. The objective of the program was to determine the efficiencies of the various types of HPWHs and to evaluate their effect on internal space conditioning requirements.

SYSTEM DESCRIPTION: Two brand types were retrofit models; the HPWH attached to an existing electric water heater. The other brand was an integral model; the heat pump and water storage tank combined as one unit. The HPWH systems were wired to allow switching to and from the heat pump mode and conventional electric resistance mode for comparison data. Five HPWHs were located in unheated basements; one in an electrically heated home and four in oil heated homes. The sixth HPWH was located in an heated basement of an electrically heated home.

METERING DESCRIPTION: Electric pulse initiating meters recorded, on magnetic tape, electric demand and usage of the HPWH and resistance water heating. A pulse initiating water flow meter recorded water usage. Temperature strip chart recorders were used to measure and record incoming cold water and outgoing hot water temperatures, and ambient air temperatures. An oil flow meter or total home electric usage were used to assess the HPWH's effect on space heating needs.

RESULTS: The HPWH savings ranged from 34% to 44% relative to electric resistance water heating. Since each HPWH operated in a different environment, multiple linear regression was used to predict the performance of each brand-type under similar operating conditions. The result of the MLR was the brand which had the lowest seasonal COP during the test period, would probably have had the highest COP if all HPWHs had operated under similar conditions. An analysis of variance was performed on weather corrected oil or total home electric usage when the water heating was performed by the HPWH verse electric resistance. The ANOVA revealed that the variance in the heating data, due to unaccounted factors, was too great to assess the space heating impact of the HPWH.

CONCLUSIONS: The use of electric and water flow pulse initiating meters and temperature strip chart recorders were an effective way of collecting data, although analyzing temperature strip charts was laborious. Future programs will consider the pulse initiating

temperature devices to reduce labors costs. Using heating degree days corrected oil and electric heating figures was not a satisfactory method of evaluating space conditioning effects of the HPWHs. Furthermore, the oil meters caused line blockage and required larger oil filters to reduce line pressure drops.

Field Measurement Instrumentation for Determining Dynamic Performance of Residential Forced-Air Heating and Cooling Systems

Lawrence J. Flanigan
Battelle, Columbus Division
Columbus, Ohio

BACKGROUND: A computer simulation model that can calculate the dynamic performance and interactions of a residence and its heating/cooling system is being developed and validated. The project is being conducted for ASHRAE/GRI/DOE as ASHRAE Special Project SP43. The program was initiated in June 1982 and is on-going.

APPROACH: The model being developed was assembled from existing models and is being refined and extended. Field measurements in two unoccupied houses support the model development and provide detailed system performance data for validation of the model.

INSTRUMENTATION AND DATA ACQUISITION SYSTEM: A data-acquisition system records system operating parameters and other data needed to track significant transients for comparisons with model predictions. Most of the data, as described below, are recorded every 20 seconds when the furnace or blower is operating and every 2 minutes thereafter. Data on tapes from the data acquisition system are transferred to a mainframe computer for analysis.

Temperatures in the house are measured in all rooms within the living spaces at walls and ceilings, at supply registers, and at key points in ducts, basement, and attic. Weather parameters are being measured with a packaged weather station mounted on the roof. Measurements include: wind velocity and direction, dry-bulb temperature, barometric pressure, and solar radiation on a horizontal surface.

Furnace and system measurements include: temperatures at the surfaces of the heat exchanger, jacket, and plenum and temperatures of inlet combustion air, supply air at the exit of the plenum (by a thermocouple grid), and return air at the furnace. The flue-gas CO_2 concentration is measured at the heat exchanger outlet. Gas consumption and total electric power inputs are measured. Operation of the gas valve, blower, and vent damper are also recorded.

Vent operation is monitored by measurements that include temperatures of the flue gas, dilution air, and the resulting mixture near the draft hood and at three locations in the chimney. Tracer-gas techniques are used to measure combined flue-gas and relief-air flow through the vent, and also, flue flow through the furnace during the burner "OFF" cycle.

Air infiltration/exfiltration in the living spaces is measured continuously with an automatic tracer-gas concentration in the house as a mixed average of samples from each room. The system operates at a constant concentration and

is controlled by the programmable data acquisition system. The system is currently configured for three zones providing measurements of both infiltration and interzone air movement. For use in the model, measured infiltration/exfiltration rates are correlated with indoor and outdoor temperature, wind speed, and vent-inlet temperature. The vent-inlet temperature responds to cyclic burner operation.

Monitoring of Dynamics of Gas Furnace Performance for the ASHRAE SP43 Project

Lawrence J. Flanigan
Battelle, Columbus Division
Columbus, Ohio

BACKGROUND AND OBJECTIVES: The ASHRAE SP43 project, jointly sponsored by ASHRAE/GRI/DOE, is concerned with developing information on the dynamic interactions within a central forced-air heating system as it operates in cycling modes in response to weather. A special focus is on dynamic performance of the furnace, the vent system, duct system, building structure, and room environment.

We are validating a detailed computer model through field tests in two unoccupied homes. While the total system is the focus, it is necessary to examine the performance of system components.

This note deals with the specific instrumentation and DAS applied to the furnace and vent performance.

FURNACE INSTRUMENTATION: A special point of interest in this project is how well the Annual Fuel Utilization Efficiency (AFUE), determined for the furnace alone by a cyclic test prescribed in DOE standards, reflects actual performance under dynamic conditions as imposed in the field under real weather patterns and how this relates to total system energy use.

Instrumentation includes the following temperatures on the furnace itself:

- Combustion air
- Heat-exchanger surface
- Jacket outer surface
- Combustion products at heat-exchanger exit
- Draft diverter dilution air
- Combustion products-dilution air mixture
- Return air
- Outlet plenum air

In addition, fuel gas flow and circulating air flow are measured. Periodic determinations are made to determine the heating value of the fuel gas.

Temperature and fuel gas flow measurements are taken every 20 seconds during furnace operation with data acquisition automatically initiated by the opening of the gas solenoid value and terminated by the temperature-controlled shutdown of the air circulating blower.

Advanced Electric Heat Pump Engineering Evaluation

Thomas J. Fagan, Jr.
Westinghouse Electric Corporation
Pittsburgh, Pennsylvania

DESCRIPTION: The DOE/Westinghouse advanced dual-stroke electric heat pump and suitable instrumentation were installed in an occupied residence near Pittsburgh to provide a record of heat pump system operating mode, heating and cooling delivered and energy use patterns for the heat pump and residence in a format correlated with observed weather conditions and time.

OBJECTIVES: (1) Demonstrate the reliability of the dual-stroke compressor and other advanced components during actual use. (2) Corroborate the high seasonal and annual energy efficiency projected from laboratory test data. (3) Provide a data base for studying energy use patterns and evaluating heat pump seasonal performance prediction methods. (4) Verify proper functioning of the heat pump control system software.

TECHNICAL STATUS: Heat pump indoor air flow rate, air temperature change, collected condensate, control system relay status, electrical energy consumption and weather parameters were measured and recorded with a date and time signature using digital data acquisition hardware. Stored data was reduced using a large mainframe computer.

DESIGN CONSTRAINTS: The instrumentation and data acquisition package was designed for reliable unattended operation and remote data recovery. The data scanner is controlled by a minicomputer. Data are transferred daily over a telephone communication modem from the test site to the mainframe computer, except that during the weekend a cassette tape unit is used to store the data. An uninterruptible power supply was provided to prevent loss of data and software during power outages. The space available was limited to a single instrument cabinet. The data system and instrument package had to be unobtrusive to the occupants of the residence.

OPERATING EXPERIENCE: Both the heat pump and the data system operated reliably with a minimum of lost or invalid data over a period of more than 2-½ years. The remote data retrieval system worked well.

CONCLUSIONS: Unattended operation of a data system with remote data recovery is reliable and convenient. The air temperature change-air flow rate method of determining delivered heating and cooling is workable, but difficult as implemented in our field test because of sensitivity to temperature sensor time response and a noisy air flow rate signature. Electronic watt, watt-hour transducers provide an accurate and reliable means of measuring instantaneous and integrated energy consumption. The data reduction software should be debugged and tested before large amounts of data are acquired to identify instrumentation problems.

Performance Monitoring of Central Plant Equipment in the Mechanical Engineering Building at the University of New Mexico

M. W. Wildin
University of New Mexico
Albuquerque, New Mexico

Project Description: The central plant of this building includes stratified water thermal storage tanks and reciprocating chillers with heat recovery condensers for heating and cooling. It also includes solar collectors for heating and air-to-air heat recovery. Detailed monitoring of thermal and electrical energy flows was performed.

Data Acquisition Objective: The system was monitored for 20 months to determine the monthly performance of thermal storage and the solar collectors and the monthly and seasonal performance of the chiller/heat pumps. Also the contributions of the major sources of heating energy and electrical energy use by the building were evaluated.

Technical Approach: The instrumentation and monitoring system was designed prior to mechanical system construction. The types and numbers of instruments were determined on the basis of a detailed monitoring plan that identified the desired results and quantities that must be measured to obtain these results accurately with consistent reliability. Redundant measurements and energy balances during routine system operation were employed to aid in insuring reliability. The computer-based data acquisition system was designed to provide output, at regular intervals, of results for thermal and electrical energy flows and of data for temperatures and mass flow rates related to the thermal energy flows. Also, all data and results from the latest scan were available via a live keyboard. Summaries of results for energy flows and average data were typically output at one-hour intervals, and summaries of cumulative energy flows were output at daily and monthly intervals. The output was examined at least once, and usually several times, daily. Action to correct malfunctions was usually initiated promptly, frequently on the day of identification.

Operating Experience: The major problems with the heating and cooling system and the instrumentation and data acquisition system were identified and corrected within the first six months of building operation. Subsequent to this, the data acquisition system was on line and valid data were obtained 24 hours a day, seven days a week for 95 percent or more of the time during most months. (Results were reported on a monthly basis.) Through diligent attention to the data acquisition system as a whole and to instruments that required special attention, i. e., flow meters, the data and results were usually reliable. Energy balances usually agreed within 5 to 10 percent. With respect to monitoring thermal storage, it was found to be very helpful to instrument one of the tanks with a large number of temperature sensors and to monitor these sensors with a system that permitted output of essentially simultaneous instantaneous readings at regular intervals.

Conclusions: Use of redundant measurements and calculation of energy balances, along with frequent, detailed attention to the data and results are essential to obtain valid results consistently. Prompt output of instantaneous results is a great aid to trouble-shooting. Thorough familiarity with system operating characteristics is a distinct aid in evaluating data and in trouble-shooting.

C. MULTI-BUILDING METERING

Onsite Fuel Cell Site Selection Data Acquisition System

Douglas G. Hegebarth
Science Applications International
La Jolla, California

The 40 kW Fuel Cell Field Test is made up of two distinct phases. The first phase encompasses selection of suitable sites for fuel cell installation, and the second phase is the actual installation and operation of the power plants. During site selection each utility participant chose three to ten candidate sites and installed the program Data Acquisition System (DAS) at each of these sites. Over 100 sites were instrumented by 31 participating utilities during this phase. Data were then collected, over a one year period, to further access the suitability of each site. This paper addresses DAS planning and implemention, including problems, during the site selection phase.

The standard DAS used at each potential site consisted of a datalogger to collect data and perform calculations, and a data recorder to record 30-minute energy/operating data on magnetic tape. After collecting two weeks of data, the cartridge tapes are sent to SAIC for data processing. Since data tapes are changed routinely, participants were required to visit the site and asked to ensure good data was being collected by checking the operation of the DAS.

The objective of the site selection phase was to assess multifamily residential, commercial, and light industrial buildings, as applicable cogeneration sites for eventual fuel cell installation. Building load data that was collected indicated that the potential demand at grid-isolated sites could exceed the electrical output characteristics of the power plant. A special DAS program was implemented at all potential grid-isolated sites to ensure that site electrical characteristics were within the operating limits of the power plant.

Numerous other compatibility problems were discovered, due to the diverse selection of candidate sites. Some participants submetered electrical circuits to determine the best host circuit for the power plant. Thermal systems were also investigated based on the data being collected; facility managers don't always know how their systems operate.

SAIC developed, tested, and employs a computer data reduction code that allows the reading, archiving, analyzing, and documentation of all data received from the potential sites. We have processed more than 3,400 data tapes containing over 856,000 hours of test data. The computer code produces for the participant a hard copy report containing a statistical data summary and energy plots for each tape.

The task of processing and analyzing the tremendous volume of data was anticipated, and procedures were put into place to expedite this task and avoid problems. Each site was given a model program for the DAS that would ensure comparability of data between sites. Many project participants made unilateral changes to this model program creating data processing nightmares.

Since the project has been ongoing for six years, the DAS being used is obsolete (the manufacturer no longer produces the datalogger). Certain enhancements have been made within the operating limits of the datalogger that have increased reliability and improved data integrity. One such improvement is the addition of remote access, this allows participants to remotely acquire energy data, debug the DAS, manipulate, display, and record data collected at the sites.

DAS operating experience has been good overall, although several generic hardware and software problems have been encountered. The biggest problem has been the periodic loss of communication between the datalogger and the data recorder resulting in blank tapes and 2-3 weeks of lost data. In current field test DAS projects, we have eliminated this problem by replacing the recorder with solid state memory and collecting the data stored in memory exclusively by remote access. This will help reduce data loss, assure faster data reduction/analysis, and help identify problems with sensors, hardware, or software, more readily.

Onsite Fuel Cell Power Plant — Data Acquisition System

V. David Ferraro
Science Applications International
La Jolla, California

Since late 1983, field testing of onsite 40-kW fuel cell power plants has been underway by over 30 gas and electric utilities as part of the Onsite Fuel Cell Field Test Project. Power plants are installed at 37 sites representing multifamily residential, commercial and light industrial buildings from 26 market segments throughout the United States. Each of the power plants has been instrumented with a standard data acquistion system (DAS) to obtain operating data for one year which provides an extensive analysis of the fuel cell's performance (i.e., efficiency, electric capacity factor, thermal capacity factor, availability).

An instrumentation subcommittee was formed in 1979 to identify an acceptable DAS for the fuel cell project. Their activities culminated in recommended specifications for all components of the standard DAS which was used by all participants during the entire field test. A DAS Purchasing Guide and DAS Manual were prepared by SAIC and issued to all participants in order to assist them in ordering, installing, operating and maintaining the DAS. SAIC also conducted training classes to instruct the participants on the DAS in a "hands-on" environment.

The standard DAS used at each test site consists of a datalogger to collect data and perform calculations, and a data recorder to record 30-minute energy/operating data on magnetic tape. Upon collecting 1-2 weeks of data, the magnetic tapes are sent to SAIC for data processing. Since data tapes are changed routinely, participants are required to visit their test sites and are asked to ensure good data is being collected by checking operation of the DAS.

SAIC developed, tested and employs a computer data reduction code which allows the reading, archiving, analyzing and documenting of all data received from test sites. SAIC has processed more than 3,400 data tapes containing over 856,000 hours of test data. The computer code produces for the participant a hard copy report containing a statistical data summary and energy plots for each tape.

Since the project has been ongoing for six years, the DAS being used is obsolete (the manufacturer no longer produces the datalogger). Certain enhancements have been made to the DAS within the operating limits of the datalogger which have increased reliability and improved data integrity. SAIC developed a system, which is compatible with the datalogger, to allow participants to remotely access power plant operating data over standard telephone lines.

This enables participants to acquire, debug, manipulate, display and record operating data collected at a test site.

Many of the test sites did not match the thermal and electrical output of the power plant, so special interface equipment and associated instrumentation was installed (e.g., step-down/step-up transformers, additional billing meters, thermal storage). These site specific characteristics posed more than a few problems for the DAS. Overall, DAS operating experience has been fairly good though several generic hardware and software problems have been encountered. The biggest problem has been the periodic loss of communication between the datalogger and data recorder resulting in blank tapes and 2-3 weeks of lost data. In current field test projects, SAIC has eliminated the recorder/magnetic tapes from the DAS and remotely accesses all data over the telephone using an in-house microcomputer. Remote data access helps reduce data loss, assures faster data reduction/analysis, and helps identify problems with sensors, hardware or software more quickly.

Sierra Pacific Power Company End-Use Monitoring Work

Jack W. Finger
Sierra Pacific Power Company
Reno, Nevada

Description: Since mid-1984, Sierra has been installing end-use monitoring equipment, to provide the Resource Planning Department at Sierra Pacific Power Co. with end-use load data for demand-side planning and load forecasting. The objective is to complete the installation of monitoring devices on the largest electrical end-uses at 144 commercial and 207 residential accounts (estimated to include 2800 channels, some of which contain totalized data from several similar loads) by 12/86.

Of the total of 351 accounts, 60% are included to provide base-line data, and 40% will provide data to be used to perform cost/benefit analyses of 18 pilot demand-side programs currently under test.

Monitoring: Variables being monitored at residential locations include total kWh, indoor temperature, gas consumption of gas furnace, wind speed, wind direction, gas consumption of gas water heater, gallons of hot water usage, water heater inlet, outlet, and ambient temperature, and kWh consumption of the following electrical loads: space heat, water heat, central A.C., room A.C., heat pumps, dishwashers, clothes washers, T.V., cooking (range and microwaves), refirgerators, freezers, pools/spas, water pumps and other large loads. Commercial points monitored include total kWh, lighting, A.C. compressors, air handlers, A.C. system supply air temperature, mixed air temperature, outside air temperature, indoor zone temperature, electric cooking, food refrigeration and freezing, kWh, Kvar, and voltage of motors under study, spaceheat, water heat, elevators and escallators, and other large loads. Loads will be monitored for five years at all sites.

Experience: Of the 351 accounts, approximately 100 have metering installed at present (approx. 750 end-uses). A hybrid system is used to acquire data using hardware manufactured by Process Systems, Robinton, Transdata, Rochester, Da-Tel, Duncan, Sangamo, Square D, Kent, and A.R.T. Most of the hardware is standard equipment with slight modifications for our unique application. Recorders are solid-state, 8-channel devices similar to those commonly used by the Electric Utility Industry for load survey and billing applications. Data is read periodically by telephone, over the existing phone line in nearly all cases.

AUTHOR INDEX

A

Aicher, Richard L. 167
Augustine, Larry 147
Augustyn, James R. 260

B

Baxter, Van D. 173
Benton, C. 71
Blake, Robert A. 265, 274
Bonne, Ulrich 181
Brewster, Darrell R. 195
Brisbane, Thomas E. 141
Burch, Jay D. 261
Burke, James C. 269
Butt, James A. 167

C

Cady, Fredrick M. 127, 257
Claar, Charles N. 267
Claridge, David 83
Clark, Wayne E. 3
Courville, George E. 253
Cromer, Charles J. 59

F

Fagan, Thomas J. 279
Ferraro, V. David 287
Finger, Jack W. 289
Flanigan, Lawrence J. 276, 278
Fowlkes, Charless W. 127, 133, 257
Fracastoro, Gian V. 21
Frey, Donald J. 151

G

Gadsby, Ken J. 67
Grot, Richard A. 67

H

Haberl, Jeff S. 83
Harrje, David T. 67, 205, 259
Hegebarth, Douglas G. 285
Hobson, Richard L. 271
Hughes, Patrick J. 3
Hurley, C. Warren 43

J

Jewel, J. 71
Jones, Ralph F. 258

K

King, Thomas A. 157

L

Levins, William P. 119
Lyberg, Mats D. 21

M

Macriss, Robert A. 237
Mazzucchi, Richard P. 33
Morse, Oliver 71

P

Palmer, John 255
Panich, Michael T. 157
Parker, Jerald D. 266

R

Reistad, Gordon M. 272

S

Schuster, George J. 103
Selkowitz, Steve 71

Shadis, William J. 157
Swenson, Paul F. 213
Szydlowski, Richard F. 111

T

Taylor, William 147

V

Verderber, Rudy 71
Volckhausen, Tom 83

W

Warren, Mashuri 71
Westervelt, Eileen T. 97
Wildin, M. W. 280
Windingland, Larry 97, 147

Z

Zawacki, Thomas S. 237

AUTHOR AFFILIATIONS

Aicher, Richard L.
Pennsylvania Power & Light Co.
Two North Ninth St., A3-1
Allentown, PA 18101
215-770-4447

Augustyn, James R.
Berkeley Solar Group
3140 Martin Luther King, Jr. Way
Berkeley, CA 94707
415-843-7600

Baxter, Van D. (615-574-2104)
Levins, William P. (615-574-2018)
Oak Ridge National Laboratory
P.O. Box Y, Bldg. 9102-1
Oak Ridge, TN 37831

Blake, Robert A.
United Illuminating Co.
80 Temple St.
New Haven, CT 06506
203-777-6188

Bonne, Ulrich
Honeywell PSC & TSC
Honeywell Plaza
Minneapolis, MN 55408
612-887-4477

Brewster, Darrell R.
Lincoln Electric System
P.O. Box 80869
Lincoln, NE 68501
402-473-3274

Brisbane, Thomas E.
Colorado State University
Solar House 2
Fort Collins, CO 80526
303-491-8617

Burch, Jay D.
Solar Energy Research Institute
1617 Cole Blvd.
Golden, CO 80401
303-231-1453

Burke, James C.
Arthur D. Little, Inc.
20 Acorn Park
Cambridge, MA 02140
617-864-5770

Butt, James A.
Lehigh University
Bethlehem, PA 18015

Cady, Fredrick M.
Micro Electronic Systems
2211 Arrowleaf Hills Drive
Bozeman, MT 59715

Claar, Charles N.
Pennsylvania State University
104 Engineering A
University Park, PA 16802
814-865-7615

Courville, George E.
Oak Ridge National Laboratory
P.O. Box X, Building 4508
Oak Ridge, TN 37831
615-574-1945

Cromer, Charles J.
Florida Solar Energy Center
300 State Road 401
Cape Canaveral, FL 32920
305-783-0300

Fagan, Thomas J.
Westinghouse Electric Corp.
1310 Beulah Road
Pittsburgh, PA 15235
412-256-1985

Ferraro, V. David (619-456-6200)
Hegebarth, Douglas G. (619-456-6730)
Science Applications
1200 Prospect St.
P.O. Box 2351
La Jolla, CA 92038

Finger, Jack W.
Sierra Pacific Power Co.
P.O. Box 10100
Reno, NV 89520
702-789-4982

Flanigan, Lawrence J.
Battelle
505 King Ave.
Columbus, OH 43201
614-424-7511

Fowlkes, Charless W.
Fowlkes Engineering
31 Gardner Park
Bozeman, MT 59715
406-587-3779

Fracastoro, Gian V.
Politecnico di Torino
Torino, Italy

Frey, Donald J.
Architectural Energy Corp.
8753 Yates Drive
Westminster, CO 80030
303-428-8228

Claridge, David
Haberl, Jeff S.
Volckhausen, Thomas
University of Colorado
Campus Box 428
Boulder, CO 80309
303-499-4001

Gadsby, K. J.
Harrje, David T.
Princeton University
CEES/EQUAD
Princeton, NJ 08540
609-452-5190

Hobson, Richard L.
Baltimore Gas & Electric
P.O. Box 1475
Baltimore, MD 21203
301-298-1931

Clark, Wayne E.
Hughes, Patrick J.
W.S. Fleming & Associates
5802 Court St. Road
Syracuse, NY 13206
315-437-1780

Grot, Richard A. (301-921-3501)
Hurley, C. Warren (301-921-3839)
National Bureau of Standards
Building 226
Gaithersburg, MD 20899

Jewel, J.
Energy Services Dept.
Pacific Gas & Electric Co.
San Francisco, CA 94106

Jones, Ralph F.
Brookhaven National Laboratory
Building 120
Upton, NY 11973
516-282-2052

King, Thomas A.
Panich, Michael T.
Shadis, William J.
Mueller Associates
1401 S. Edgewood St.
Baltimore, MD 21227
301-646-4500

Lyberg, Mats D.
Swedish Institute
for Building Research
Box 785, S-80129
Gavle, Sweden
011-46-26-10020

Mazzucchi, Richard P.
Battelle Pacific NW Laboratory
P.O. Box C5395
Seattle, WA 98105
206-525-3130

Palmer, John
Databuild Limited
Rutland House
148 Edmund St.
Birmingham, England B32LA
021-236-6477

Parker, Jerald D.
Oklahoma State University
School of MAE, EN218
Stillwater, OK 74078
405-624-5900

Reistad, Gordon M.
Oregon State University
Dept. of Mech. Engr.
Cornwallis, OR 97331
503-754-2575

Schuster, George J.
Battelle Pacific NW Laboratory
P.O. Box 999
Richland, WA 99352
509-376-4311

Swenson, Paul F.
East Ohio Gas Co.
P.O. Box 5759
Cleveland, OH 44101
216-348-6414

Benton, C.
Morse, Oliver
Selkowitz, Steve
Szydlowski, Richard F.
Verderber, Rudy
Warren, Mashuri L.
Lawrence Berkeley Laboratory
Building 90
Berkeley, CA 94720

Augustine, Larry
Taylor, William
Westervelt, Eileen T.
Windingland, Larry
U.S. Army Corps of Engineers
P.O. Box 4005
Champaign, IL 61820

Macriss, Robert A.
Zawacki, Thomas S.
Institute of Gas Technology
4201 West 36th St.
Chicago, IL 60632
312-890-6432

WORKSHOP ATTENDEES

Ahmed, Syed Faruq
Burt Hill Kosar Rittelmann
400 Morgan Center
Butler, PA 16001
412-285-4761

Aicher, Richard L.
Pennsylvania Power & Light Co.
Two North Ninth St., A3-1
Allentown, PA 18101
215-770-4447

Anderson, Richard W.
Utah Power & Light
1407 W. North Temple St.
Salt Lake City, UT 84116
801-535-2971

Augustine, Larry J.
U.S. Army Corps of Engineers
P.O. Box 4005
Champaign, IL 61820
217-352-6511

Augustyn, James R.
Berkeley Solar Group
3140 Martin Luther King Jr. Way
Berkeley, CA 94707
415-843-7600

Ball, David A.
Battelle
505 King Ave.
Columbus, OH 43201
614-424-4901

Baxter, Van D.
Oak Ridge National Laboratory
P.O. Box Y, Bldg. 9102-1
Oak Ridge, TN 37831
615-574-2104

Blake, Robert A.
United Illuminating Co.
80 Temple St.
New Haven, CT 06506
203-777-6188

Blatt, Morton H.
Electric Power Research Institute
P.O. Box 10412
Palo Alto, CA 94303
415-855-2457

Boettner, Robert L.
U.S. Department of Energy
Building Equipment Division
1000 Independence Ave., SW
Washington, DC 20585
202-252-9130

Bonne, Ulrich
Honeywell PSC & TSC
Honeywell Plaza
Minneapolis, MN 55408
612-887-4477

Brewster, Darrell R.
Lincoln Electric System
P.O. Box 80869
Lincoln, NE 68501
402-473-3274

Brisbane, Thomas E.
Colorado State University
Solar House 2
Ft. Collins, CO 80526
303-491-8617

Burch, Jay D.
Solar Energy Research Institute
1617 Cole Blvd.
Building 15/3
Golden, CO 80401
303-231-1453

Claar, Charles N.
Pennsylvania State University
104 Engineering A
University Park, PA 16802
814-865-7615

Courville, George E.
Oak Ridge National Laboratory
P.O. Box X, Bldg. 4508
Oak Ridge, TN 37831
615-574-1945

Cromer, Charles J.
Florida Solar Energy Center
300 State Road 401
Cape Canaveral, FL 32920
305-783-0300

Davison, Brian
City of Austin
Electric Utility
P.O. Box 1088
Austin, TX 78767
512-440-5534

Dechow, John P.
Columbia Gas System Corp.
1600 Dublin Road
Columbus, OH 43215
614-481-1494

Demetri, Elia P.
Advanced Mechanical Technology
141 California St.
Newton, MA 02158
617-964-2042

Dent, Christopher L.
Lambert Engineering
601 NW Harmon Blvd.
Bend, OR 97701
503-388-2623

Deringer, Joseph J.
The Deringer Group
P.O. Box 299
Riva, MD 21140
301-956-4200

Douglass, John G.
Washington State Energy Office
400 East Union St.
Olympia, WA
206-754-0781

Eising, John P.
A. O. Smith Corp.
12100 West Park Place
Milwaukee, WI 53223
414-359-4232

Fagan, Thomas J.
Westinghouse Electric Corp.
1310 Beulah Road
Pittsburgh, PA 15235
412-256-1985

Fairchild, Phillip D.
Electric Power Research Institute
P.O. Box 10412
Palo Alto, CA 94303
415-855-8949

Ferraro, V. David
Science Applications
1200 Prospect St.
P.O. Box 2351
La Jolla, CA 92038
619-456-6200

Finger, Jack W.
Sierra Pacific Power Co.
P.O. Box 10100
Reno, NV 89520
702-789-4982

Fiskum, Ronald J.
U.S. Department of Energy
1000 Independence Ave., SW
Washington, DC 20585
202-252-9130

Flanigan, Lawrence J.
Battelle
505 King Ave.
Columbus, OH 43201
614-424-7511

Floyd, Robert N.
ARCINC Corp.
1004 West Ave.
Austin, TX 78701
512-476-3971

Fowlkes, Charless W.
Fowlkes Engineering
31 Gardner Park
Bozeman, MT 59715
406-587-3779

Freeman, Ernest C.
U.S. Department of Energy
1000 Independence Ave., SW
Washington, DC 20585
202-252-9436

French, Charles E.
Gas Research Institute
8600 W. Bryn Mawr Ave.
Chicago, IL 60631
312-399-8243

Frey, Donald J.
Architectural Energy Corp.
8753 Yates Drive
Westminster, CO 80030
303-428-8228

Gambino, Richard H.
El Paso Electric Co.
P.O. Box 982
El Paso, TX 79960
915-543-5815

Gavrila, Justine E.
Detroit Edison
2000 Second Ave.
Detroit, MI 48226
313-237-8919

Griffith, James E.
Public Service Electric
and Gas Research Corp.
200 Boyden Ave.
Maplewood, NJ 07040
201-761-1007

Griggs, II, Erick E.
Tennessee Valley Authority
Power Service Center 5
Chattanooga, TN 37401
615-697-4207

Grot, Richard A.
National Bureau of Standards
Bldg. 226
Gaithersburg, MD 20899
301-921-3501

Haberl, Jeff S.
University of Colorado
Campus Box 428
Boulder, CO 80309
303-499-4001

Hanna, William T.
Battelle
505 King Ave.
Columbus, OH 43201
614-424-4794

Harrje, David T.
Princeton University
CEES/EQUAD
Princeton, NJ 08540
609-452-5190

Hegebarth, Douglas G.
Science Applications
1200 Prospect St.
La Jolla, CA 92037
619-456-6730

Heidell, James A.
Battelle Pacific NW Lab
P.O. Box 999
Richland, WA 99352
509-376-4852

Hiller, Carl
Electric Power Research Institute
P.O. Box 10412
Palo Alto, CA 94303
415-855-8950

Hobbs, Alexander O.
Carolina Power & Light
Box 1551
Raleigh, NC 27602
919-836-6007

Hobson, Richard L.
Baltimore Gas & Electric
P.O. Box 1475
Baltimore, MD 21203
301-298-1931

Hough, Robert E.
Carrier Corp.
P.O. Box 4808
Syracuse, NY 13221
315-432-6289

Hughes, Patrick J.
Vice-President
W. S. Fleming & Associates
5802 Court St. Road
Syracuse, NY 13206
315-437-1780

Hughs, William M.
Lone Star Gas Co.
301 S. Harwood
Dallas, TX 75201
214-670-2976

Hundt, Roger C.
Lennox Industries
P.O. Box 877
Carrollton, TX 75011
214-245-2525

Hurley, C. Warren
National Bureau of Standards
Building 226
Gaithersburg, MD 20899
301-921-3839

Jones, Ralph F.
Brookhaven National Laboratory
Bldg. 120
Upton, NY 11973
516-282-2052

Kasik, Lawrence
Detroit Edison
2000 Second Ave.
Detroit, MI 48226
313-897-1105

King, Thomas A.
Mueller Associates
1401 S. Edgewood St.
Baltimore, MD 21227
301-646-4500

Kuliasha, Michael A.
Oak Ridge National Laboratory
P.O. Box Y, Bldg. 9102-2
Oak Ridge, TN 37831
615-574-0330

Kuurstra, John C.
Ontario Hydro
800 Kipling Ave.
Toronto, Ontario
Canada M8Z 5S4
416-231-4111

Lengrand, Bruno
BP North America Inc.
620 Fifth Ave.
New York, NY 10020
212-887-9300

Levins, William P.
Oak Ridge National Laboratory
P.O. Box Y, Bldg. 9102-2
Oak Ridge, TN 37831
615-574-2018

Liu, Tzuoh-Hwa
City of Austin
3000 S. IH-35
Fountain Park Plaza I
Austin, TX 78704

Logee, Terrence L.
Vitro Corporation
1400 Georgia Ave.
Silver Spring, MD 20910
301-231-1407

Lyberg, Mats D.
Swedish Institute
for Building Research
Box 785, S-80129
Gavle, Sweden
011-46-26-10020

Maret, Arthur R.
Gas Research Institute
8600 W. Bryn Mawr
Chicago, IL 60631
312-399-8311

Marsh, Steve
City of Austin
Electric Utility
P.O. Box 1088
Austin, TX 78767
512-440-5534

Martinez, Mark S.
Southern California Edison
P.O. Box 800
Rosemead, CA 91770

Mazzucchi, Richard P.
Battelle Pacific NW Lab
P.O. Box C5395
Seattle, WA 98105
206-525-3130

Miller, Jerry L.
Copeland Corporation
1675 W. Campbell Road
Sidney, OH 45365
513-498-3559

Misuriello, Harry J.
W. S. Fleming & Associates
536 Seventh St. SE
Washington, DC 20003
202-543-7212

Murphy, William E.
Texas A&M University
Dept. of Mech. Engr.
College Station, TX 77843
409-845-3923

Novacek, Thomas R.
Science Applications
1200 Prospect St.
Box 2351
La Jolla, CA 92038
619-456-6673

Obaigbena, Alan G.
Florida Public Service Commission
101 East Gaines St.
Tallahassee, FL 32301
904-488-8501

Palmer, John
Databuild Limited
Rutland House
148 Edmund St.
Birmingham, England B32LA
021-236-6477

Parker, Jerald D.
Oklahoma State University
School of MAE, EN218
Stillwater, OK 74078
405-624-5900

Patton, Henry H.
Sustainable Resource
Development Group
Cenowith-Underwood, WA 98651
509-538-2500

Penn, George C.
Wisconsin Power & Light
P.O. Box 192
Madison, WI 53701
608-252-3930

Phillips, James N.
Lone Star Gas Co.
2601 Logan St.
Dallas, TX 75215
214-426-7075

Rask, Dean R.
Honeywell, Inc.
1985 Douglas Drive
Golden Valley, MN 55422
612-542-6514

Reardon, Greg
Alabama Power Co.
P.O. Box 2641
Birmingham, AL 35291
205-250-4448

Reistad, Gordon M.
Oregon State University
Dept. of Mech. Engr.
Cornwallis, OR 97331
503-754-2575

Rutz, Allen L.
Battelle
505 King Ave.
Columbus, OH 43201
614-424-4031

Schuster, George J.
Battelle Pacific NW Lab
P.O. Box 999
Richland, WA 99352
509-376-4311

Sharp, Terry R.
Oak Ridge National Laboratory
Bldg. 3550
P.O. Box X
Oak Ridge, TN 37831
615-574-4506

Sherman, Max H.
Lawrence Berkeley Laboratory
Building 90
Berkeley, CA 94720
415-486-4022

Silver, Jr., James D.
Tennessee Valley Authority
2853 D Signal Place
Chattanooga, TN 37402
615-751-6813

Stokes, Gerald M.
Battelle Pacific NW Lab
P.O. Box 999
Richland, WA 99352
509-376-5064
FTS 444-5064

Swenson, Paul F.
East Ohio Gas Co.
P.O. Box 5759
Cleveland, OH 44101
216-348-6414

Szydlowski, Richard F.
Lawrence Berkeley Laboratory
Building 90
Berkeley, CA 94720
415-486-7328

Tagore, Sam G.
U.S. Department of Energy
1000 Independence Ave.
Washington, DC 20585
202-252-9193

Ternes, Mark P.
Oak Ridge National Laboratory
Bldg. 3550
P.O. Box X
Oak Ridge, TN 37831
615-574-0749

Thedford, Marvin
Texas Utility Electric Co.
1506 Commerce
Dallas, Texas
214-698-7722

Van Maren, Diane
Sacramento Municipal
Utility District
6201 S St.
Sacramento, CA 95817
916-732-5475

Virgin, Don G.
Virginia Power
P.O. Box 26666
Richmond, VA 23261
804-771-3440

Warren, Mashuri L.
Lawrence Berkeley Laboratory
Building 90
Berkeley, CA 94720
415-486-6364

Westervelt, Eileen T.
U.S. Army Corps of Engineers
P.O. Box 4005
Champaign, IL 61820
217-352-6511

Whiddon, William I.
W. I. Whiddon & Associates
1508 Emerson Ave.
McLean, VA 22101
703-790-9310

Wildin, Maurice W.
University of New Mexico
Albuquerque, NM 87131
505-277-6288

Wilkins, Carl L.
Carolina Power & Light
P.O. Box 1551
Raleigh, NC 27602
919-836-7668

Will, C. Frederick
Alabama Power Co.
P.O. Box 2641
Birmingham, AL 35291
205-250-4443

Windell, Phillip A.
USDOE/BPA
P.O. Box 3621 - KES
Portland, OR 97208

Windingland, Larry
U.S. Army Corps of Engineers
P.O. Box 4005
Champaign, IL 61820
217-352-6511

Wolfe, Vinton L.
Atlanta Gas & Light Co.
P.O. Box 4569
Atlanta, GA 30302
404-572-0871

Woller, Bernie
Buckeye Power
P.O. Box 26036
Columbus, OH 43226
614-846-5757

Worthington, Kenneth A.
Virginia Power
P.O. Box 26666
Richmond, VA 23261
804-771-3962

Zawacki, Thomas S.
Institute of Gas Technology
4201 West 36th St.
Chicago, IL 60632
312-890-6432

Zimmerman, Kay H.
Oak Ridge National Laboratory
P.O. Box Y, Bldg. 9201-1
Oak Ridge, TN 37831
615-576-4921

☆U.S. GOVERNMENT PRINTING OFFICE: 1986-631-056/20243