Volume Two of Three

21st Intersociety Energy Conversion Engineering Conference

ADVANCING TOWARD TECHNOLOGY BREAKOUT IN ENERGY CONVERSION

San Diego, California
August 25–29, 1986

FILE COPY
DO NOT
REMOVE

WATER CONSUMPTION OF EVAPORATIVE COOLING SYSTEMS

Robert H. Turner
Department of Mechanical Engineering
University of Nevada-Reno 89557

ABSTRACT

In considering the virtues and debits of evaporative cooling (EC) units relative to refrigerated air conditioning (AC) systems, water consumption is pertinent. Since EC units consume water and work best in arid environments where water can be at a premium, excessive water consumption (M) by EC systems could represent additional financial and environmental penalties in considering EC systems. This study compares water consumption (M) necessary for AC cooling to water requirements for different EC approaches for different conditions.

This analysis is not intended to be comprehensive. It does consider some worst case conditions and places them into perspective. A more comprehensive study would consider realistic seasonal water consumptions using ASHRAE Bin Weather Data.

ANALYSIS

I. Base Case

The basis for comparisons will be water necesary to produce refrigerated air conditioning (AC). Although no water is directly consumed at the location where the AC unit is providing the cooling effect, the unit runs on electricity, which in turn requires water in its production at the power plant. The cooling for a power plant can be produced either by raising the water temperature of a water body or by evaporating water in a cooling tower. In locations where evaporative coolers are alternative candidates for summer space cooling power plants often use cooling towers. Therefore, to facilitate comparisons it is assumed that power plant cooling is achieved by evaporating water.

Power plant cooling towers require blowdown of water to avoid excess mineral buildup in its packing. The allowable mineral concentration, and thus blowdown factor, depends upon the mineral content of the input water. Blowdown Ratio is defined as the quantity of water rejected by a cooling tower system (to remove concentrated minerals) divided by the quantity of fresh water admitted to the system. If fresh water is used then a blowdown ratio of 10% is often used. For water with mineral content of 3000 ppm (about 10% the salinity of sea water) a Blowdown Ratio of 33% is appropriate.

Consider now that the power plant conversion and transmission efficiency is η.

$$\eta = \frac{P}{Qin} = \frac{P}{P+Qr} \quad \rightarrow \quad P = \frac{\eta\ Qr}{1-\eta} \tag{1}$$

Qr is the heat rejected by the power plant which must be removed by either heating or evaporating water. P is the power delivered to the customer.

Now the coefficient of performance of the refrigeration AC unit is COP:

$$COP = Q/P \tag{2}$$

Q is the useful cooling effect produced by the AC.

Inserting Equation (1) into (2) gives an expression for Qr.

$$Q_r = \frac{Q(1-\eta)}{\eta*(COP)} \tag{3}$$

The water evaporation rate Me is given by equation (4), where h_f = 1050 BTU/lb is the latent heat of water evaporation.

$$M_e = \frac{Qr}{h_f} \tag{4}$$

Finally, the water required to achieve the necessary power to produce the useful cooling effect (Q) is Me modified by the Blowdown Ratio (BR), or

$$M = \frac{Ml}{(1-BR)} = \frac{Q(1-\eta)}{\eta*COP*h_f*(1-BR)} \tag{5}$$

To exercise the above set of equations consider the overall power plant efficiency (including transmission losses) η = 0.33. Since extremes of weather conditions will be considered for the EC performances, assume the AC COP = 2.5. It is recognized when cooler weather is ambient that COP = 3 may be achieved by some units. All calculations and comparisons will be considered per unit of load cooling effect. Therefore, the standard load will be Q = 12,000 BTU/hr-Ton. The calculation for these conditions follows. For BR = .25,

$$M = \frac{Q(1-\eta)}{\eta*COP*h_f(1-BR)} = \frac{(12{,}000\ BTU/hr\text{-}Ton\ AC)(1-.33)}{.33(2.5)(1050\ \frac{BTU}{lb\text{-}v})(1-.25)}$$

$$\underline{M = 12.4\ lb./hr\text{-}Ton\ AC}$$

Thus, M = 12.4 pounds-water/hr/Ton-AC is the power plant water consumption to produce sufficient electricity to achieve 1-Ton (12,000 BTU/hr) of air conditioning effect with a refrigeration heat pump, within the stated assumptions. This value of M = 12.4 lb/hr-Ton will be considered as the standard of comparison for summer cooling requirement, and water consumption by evaporative (swamp) coolers for different conditions will be compared to this Base Case value.

Note that this water consumption value is relatively independent of the ambient environmental conditions and also of the temperature at which the conditioned space is maintained. As the ambient dry bulb temperature is reduced, the AC COP will tend to rise because the heat rejection temperature is lower. Also, as the temperature of the conditioned space is reduced, the AC COP tends to diminish because the temperature differential across the heat pump is increased. But these are secondary effects and will not change the above overall water consumption estimate more than a few percent. In contrast, we will see that for evaporative cooling systems the water consumption is very dependent upon ambient dry bulb temperature (DBT), wet bulb temperature (WBT) and the temperature of the conditioned space, as well as system specifics.

II. Water Consumption for Evaporative Cooling Systems

1. Single-Stage Systems

The most common evaporative (swamp) cooler system is the single-stage unit. Ambient air is passed through a wet packing, often an aspen filter, where the air moisture content is increased. Since this is an adiabatic process, the total air enthalpy and WBT are maintained constant. But since moisture is added to the air, the DBT is decreased. This is because the heat required to evaporate the water must come from the air. This well known process is depicted on a psychrometric chart. See Figure 1 for a sea level psych chart.

For a sample calculation, consider the ASHRAE 1% summer design condition for Las Vegas. This is dry bulb temperature DBT = 108-F and wet bulb temperature WBT = 66-F. From Figure 1 the moisture content is W1 = 0.004 lb-v/lb-da. Assume in all calculations the design house conditioned temperature is 80-F. Further assume that the approach to WBT achieved through an evaporative cooler is 80%. Such an efficiency is achievable by the Munters fill which is used in many of the newer swamp coolers. With an approach of 80% the DBT at cooler exit (supply air to the house) is DBT2 = 74.4-F, and W2 = 0.012. The entire problem including the calculation is shown on Figure 1.

Since the supply air to the house is at 74.4-F and the specified house temperature is 80-F, the air flowrate must be high to accommodate the load. The calculation in Figure 1 shows V = 2039 CFM/Ton-AC is required. Since this is a very high flowrate and much air needs to be cooled from 108-F to 74.4-F, the on-site water consumption is quite high; M = 95.2 lb/hr-Ton. This value also accommodates an assumed Blowdown Ratio of BR = 0.25.

Evaporative coolers (EC) also consume electricity which requires water in its production. It is shown below that ECs require more water than refrigeration air conditions, and so the remote water required to provide the electricity for EC will be small relative to the on-site consumption. However, to account for the effect it will be assumed that all of the EC systems require one-third of the electricity to produce cooling effects relative to the refrigeration AC, which is the basis of comparison. The overall error of this assumption will be small in any case. Therefore, the water consumption for all EC systems will be increased by (.33*12.4 =) 4.1 lb/hr-Ton AC to account for water to produce electricity. Thus, the actual water consumption for the considered single-stage EC system is (95.2 + 4.1 =) 99.3 lb/hr-Ton AC. This value is reported in Table 1.

In a similar calculation made for a more severe climate, El Centro in California, the calculated outlet temperature from the EC was 81.6-F. See Table 1. Therefore, it would be impossible to provide single-stage EC cooling for the 1% summer design condition in El Centro if the required conditioned space were at 80-F, regardless of the flowrate. In general, the higher the outlet air temperature from the cooling unit, the greater is the required air flow rate.

2. Two-Stage Systems

From the above it is reasonable to expect that a two-stage evaporative cooler will have reduced supply air flowrate requirements because it can generally produce cooler air than a one-stage unit. Therefore, less water will be introduced to the conditioned space. However, there can also be two evaporative coolers, each of which consumes water.

Figure 2 shows a possible configuration for a two-stage cooling unit, using two evaporative coolers in the system. Other arrangements are possible. The sample calculation below, following Figure 2, estimates the air flowrate and water consumption for the Las Vegas 1% summer design condition. It is assumed that the air flowrates through each EC are the same.

The heat exchanger effectiveness is assumed to be $\varepsilon = 0.80$. Both EC efficiencies (approaches) are also assumed at $\eta = 0.80$. From Figure 1 we see that T5 = 74.4-F and W5 = 0.012. Then, following Figure 2,

$$\underline{T_2} = T_1 - \varepsilon(T_1 - T_5) = 108°F - 0.8(108-74.4°F) = \underline{81.1°F} \text{ so, } \underline{WBT_2 = 56.5°F}$$

$$T_3 = 56.5°F + (1-.8)(81.1-56.5°F) = 61.4°F \text{ so,}$$

$$W_3 = .0086 \frac{lb\text{-}v}{lb_{da}}$$

$$\underline{V_2 = V_1} = \frac{Q_{Load}\ v}{Cp(T_4-T_3)} = \frac{(12{,}000\ BTU/hr\text{-}Ton)(13.3\ ft^3/lb)}{(.24\ BTU/lb°F)(80-61.4°F)\ 60} = \underline{596\ CFM/Ton\text{-}AC}$$

$$M_v = \frac{V}{v(1-BR)}[(W_5-W_1) + (W_3-W_2)] = \frac{596\ CFM/Ton}{13.3\ ft^3/lb}[(.012-.004) + (.0086-.004)]/(1-.25)$$

$$\underline{M_v = .76\ lb\text{-}v/min\text{-}Ton = 45.9\ lb\text{-}v/hr\text{-}Ton\text{-}AC}$$

Add $M_e = 4.1$ for electricity so, $M = 45.9+4.1 = 50.0$ lb/hr-Ton AC

In this case the supply air enters the house at 61.4-F, instead of 74.4-F as for the single-stage system in Figure 1. Therefore, the supply air flowrate is much lower for the two-stage system relative to the single-stage (596 CFM/Ton versus 2039 CFM/Ton) to maintain the house air at 80-F. The total on-site two-stage water consumption is 45.9 lb/hr-Ton (compared to 95.2 for single-stage). Adding 4.1 for electricity gives 50.0 lb/hr-Ton AC.

An alternative EC system approach employing a heat exchanger would be to introduce the reject air (at 80-F) from the conditioned space as the secondary air entering the heat exchanger. The two air streams through the heat exchanger have the same mass flowrate. Such an approach is shown in Figure 3 for the 1% summer design condition for Las Vegas. With a heat exchanger effectiveness of $\eta = 0.80$, the ambient make-up supply air is cooled from 108-F to 85.6-F. The moistened supply air enters the house at 63.5-F, with a humidity ratio W3 = 0.009 lb-v/lb-da, as shown below.

$$\underline{T_2} = T_1 - \varepsilon(T_1 - T_4) = 108°F - .8(108-80°F) = \underline{85.6°F} \text{ so, } \underline{WBT_2 = 58°F}$$

$$\underline{T_3} = T_2 - \eta(T_2-WBT_2) = 85.6 - .8(85.6-58°F) = \underline{63.5°F} \text{ so, } \underline{W_3 = .009}$$

$$\underline{V} = \frac{Q_{Load}\ v}{Cp(T_4-T_3)} = \frac{(12{,}000\ BTU/hr\text{-}Ton)(13.4\ ft^3/lb)}{(.24\ BTU/lb°F)(80-63.5°F)\ 60\ min/hr} = \underline{667\ CFM/Ton}$$

$$M_v = \frac{V}{v}[W_3-W_2]/(1-BR) =$$

$$\frac{(677\ ft^3/min\text{-}Ton)}{(13.4\ ft^3/lb)(1-.25)}[.009-.004\ lb\text{-}v/lb_{da} =$$

$$.34\ lb\text{-}v/min\text{-}Ton$$

$$\underline{M_v = 20.2\ lb\text{-}v/hr\text{-}Ton}\quad \text{Add 4.1 so, } M = 24.3\ lb/hr\text{-}Ton$$

The supply air volumetric flowrate is only 14% higher (677/596 = 1.14) than for the two-EC approach. But since just one EC is used, the on-site water consumption is only 44% (20.2/45.9 = .44) of the two-EC system. Generally one could expect the water consumption to be less for the 1-EC system with a heat exchanger. However, as the ambient temperature is reduced below the 1% summer design condition, the differential between the water consumption for the two approaches should decrease.

Calculations for a system similar to that shown in Figure 3, with the El Centro 1% summer design, shows that the house can be maintained at 80-F with V = 1145 CFM/Ton. The water consumption is M = 24.2 lb/hr-Ton. The water consumption would more than double if two ECs were used. It is of interest that the single-stage EC is not capable of providing adequate cooling for the El Centro 1% ASHRAE summer design condition, but that cooling can be achieved by a two-stage EC system.

EC water consumption was calculated for several conditions, and the results are summarized in Table 1. Also shown is the water consumption for refrigeration AC.

CONCLUSION

Table 1 compares water consumed by different modes of producing summer space cooling. Actually, such a comparison is only a small part of a much more complex menu of issues. Condenser cooling water consumed by a power plant may be brackish and of little use for any other purpose, while a residential evaporative cooler likely uses potable water, which is much more valuable.

A much more important and positive impact of evaporative cooling is the capacity displacement and peak load displacement which ECs make possible for the power utility company. Since swamp coolers use much less electricity than refrigeration units, some utility companies in the American Southwest provide incentives to simulate installation of EC units instead of heat pumps.

Table 1 summarizes calculations of water consumption (lb/hr-Ton) and required supply air volumetric flowrate (CFM/Ton) to condition a space at a given air temperature during hot summer conditions. Water consumption associated with evaporative cooling approaches for different conditions are compared to water usage for refrigerated air conditioning. Although Table 1 generally presents calculations for extreme conditions, and not seasonal averaged consumption, comparisons are useful and interesting because they indicate the strong impact of different parameters.

The Base Case for comparison is the water required to generate and deliver sufficient electricity to produce 1 Ton (12,000 BTU/hr) of AC effect. In Table 1 this water usage is estimated to be M = 12.4 lb/hr-Ton. This value is nearly independent of either ambient weather conditions or temperature at which the conditioned space is maintained.

In contrast, it is clear from Table 1 for EC units that water consumption is highly dependent on at least four items: (1) ambient dry bulb temperature (DBT); (2) ambient wet bulb temperature (WBT); (3) temperature at which the conditioned space is to be maintained; and (4) EC system specifics.

Since EC units draw in large quantities of ambient air and cool this air by addition of moisture, much of the cooling power of the system is not useful for cooling the space. For example, consider the Las Vegas ASHRAE 1% summer design condition, namely DBT = 108-F and WBT = 66-F. Figure 1 shows that a single-stage EC with η = 0.80 can cool the supply air to 74.4-F. If the conditioned space is to be maintained at 80-F, then only the air cooling below 80-F is utilizable. But this represents only (80-74.4)/(108-74.4) = 16.7% of the total cooling (and total useful water expenditure). The rest is non-productive. Thus, for the extreme conditions of Table 1, EC water usage is generally higher than for the AC Base Case.

The most severe (hightest DBT) 1% ASHRAE summer design point in the U.S. is given for El Centro, California. This is DBT = 112-F and WBT = 74-F. Case 4 of Table 1 shows that a single-stage EC cannot provide supply air below 81.4-F, and so a house cannot be maintained at 80-F with a direct EC. Las Vegas has a less severe 1% design point; DBT = 108-F and WBT = 66-F. Case 1 and Figure 1 show that a conditioned space can be maintained at 80-F if the supply air flowrate is sufficiently high. However, the water consumption is excessive (95.2 lb/hr-Ton) due to the high flowrate. Case 2 for the 5% summer condition in Las Vegas, a milder condition, shows that only 66.7/95.2 = 70% of the water (relative to the 1% design condition) is required for the same effect. Case 3 for Reno, a still milder 1% condition (DBT = 95-F and WBT = 61-F), requires a smaller air flowrate and much less water. The general conclusion is that lower ambient DBT and lower WBT are consistent with lower water usage for a given effect.

Since extreme conditions (i.e., the ASHRAE 1% Summer Design Point) are considered in Table 1 (except for Case 2), water consumption estimates are the maximum expected throughout a season. A more complete analysis would consider seasonal water consumption at different locations, and for different conditions, using ASHRAE Bin Weather Data. This would help predict realistic seasonal water consumption estimates.

A heat exchanger to precool the intake air, Figures 2 and 3, provides much more efficient cooling than a single-stage EC, as is seen by comparing Cases 1, 5 and 6. Both supply air flowrates and water usages are less than for the direct (single-stage) EC.

For hot climates, passing vent air from the house (at 80-F in Table 1 except for Case 10) through an air-to-air heat exchanger, Figure 3, saves a considerable amount of water relative to using two ECs, as in Figure 2.

Both the water consumption and required air flowrates are sensitive to the maintained temperature of the conditioned space, as seen from Cases 9 and 10. The lower the house temperature, the greater the water consumption. This correlation of house temperature versus water consumption is not found with a heat pump cooling unit.

The use of a heat exchanger to precool ambient supply air prior to addition of moisture makes possible deployment of ECs in severe desert climates. This is seen from comparing Cases 4 and 7 for El Centro, California. Case 4 indicates a direct (single-stage) EC cannot provide adequate cooling at all times. But the indirect (2-stage) EC, using the concept illustrated in Figure 3, can provide cooling at all times without excessive water consumption or air flowrates. The economics of the heat exchanger have yet to be investigated.

TABLE 1. SUMMARY OF WATER CONSUMPTION FOR SUMMER COOLING

Conditioned Space Temperature = 80°F (except Case 10)
Blow Down Ratio = 0.25 (in every case)

Las Vegas and El Centro Calculations used Sea Level Psychometric Chart
Reno Calculations used 5000' Psychometric Chart

CASE	SYSTEM	AMBIENT CONDITIONS	Total Water / On-Site Water $M \frac{lb\text{-}v}{hr\text{-}Ton\ AC}$	$V \frac{CFM}{Ton\ AC}$
Base Case	Refrigerated AC	All	12.4	
1	Single Stage EC As in Figure 1	Las Vegas 1%: DBT = 108°F WBT = 66°F	99.3 / 95.2	2039
2	"	Las Vegas 5%: DBT = 104°F WBT = 65°F	70.8 / 66.7	1586
3	"	Reno 1%: DBT = 95°F WBT = 61°F	39.1 / 35.0	1110
4	"	El Centro, Calif. 1%: DBT = 112°F WBT = 74°F	Cannot Supply Air Below 81.6°F for η = .80 Evap Cooler!	
5	2-Stage EC Two ECs, Figure 2	Las Vegas 1%: DBT = 108°F WBT = 66°F	50.0 / 45.9	596
6	2-Stage EC House Air to HE Figure 3	"	24.3 / 20.2	677
7	Figure 3	El Centro, Calif. 1%: DBT = 112°F WBT = 74°F	28.3 / 24.2	1145
8	Figure 2	Reno 1%: DBT = 95°F WBT = 61°F	30.0 / 25.9	520
9	Figure 3	"	22.0 / 17.9	753
10	Figure 2 House Air at 70°F	" House Air at 70°F	47.8 / 43.7	849

Note Cases 1 through 10 have a water consumption M_e = 4.1 lb/hr-Ton AC to account for water required to produce the electricity for EC operation.

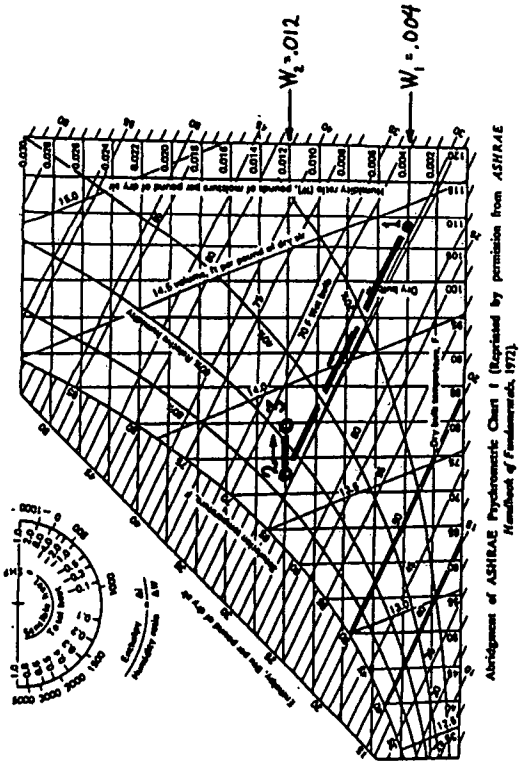

Las Vegas ASHRAE 1% Summer Design Day: DBT = 108°F, WBT = 66°F, W_1 = .004 lb_v/lb

of EC = 0.80, so DBT_2 = 66 + (1-.8)(108-66) = 74.4°F, so W_2 = .012 lb_v/lb

Then $V_1 = \frac{q_{load}\ v}{c_p(T_3-T_2)} = \frac{(12{,}000\ BTU/hr\text{-}Ton)(13.7\ ft^3/lb)}{(.24 BTU/lb°F)(80-74.4°F)(60)}$

V_1 = 2039 CFM/Ton-AC Required Supply Air

$M_1 = (W_2-W_1) = 1.19\ lb_v/min\text{-}TonAC$

Now assume a Blowdown Ratio of 0.25. Then the water consumption for the cooling process is

$M_1 = M_1/(1-BR) = 95.2\ lb_v/hr\text{-}TonAC$

Add M_2 = 4.1 for electricity generation. Then

$M = 95.2 + 4.1 = 99.3\ lb_v/TonAC$

FIGURE 1 Illustrating Calculation of a Single Stage Evaporative Cooler and Water Consumption to Achieve 1-Ton of Air Conditioning Effect

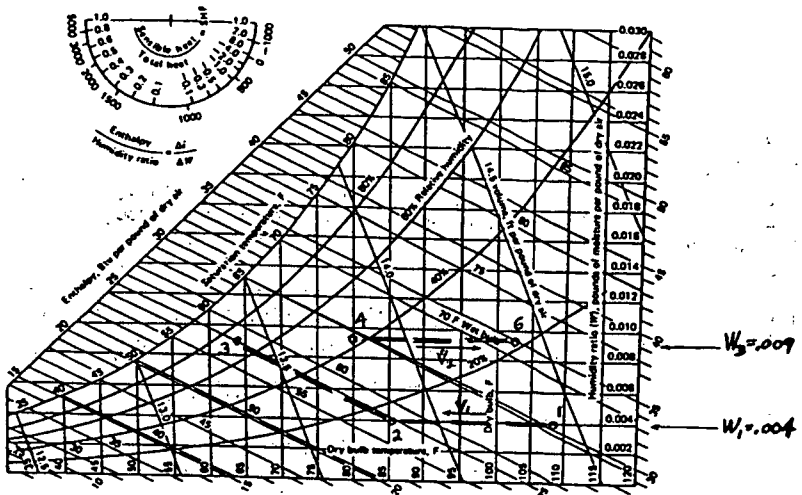

Abridgment of ASHRAE Psychrometric Chart I (Reprinted by permission from *ASHRAE Handbook of Fundamentals*, 1972).

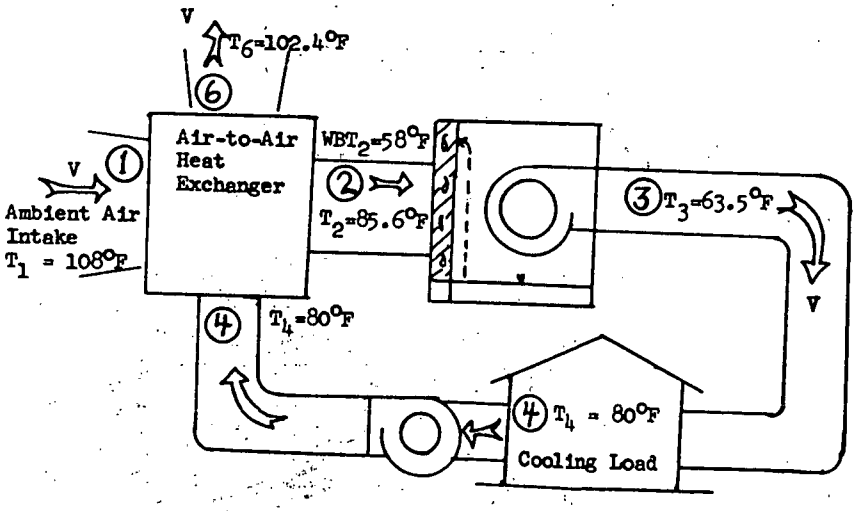

FIGURE 3 Two-Stage Evaporative Cooling Unit with Secondary Air to the Heat Exchanger Taken from the House. Process Indicated is for the ASHRAE 1% Summer Design Point for Las Vegas. See Calculations in the text.

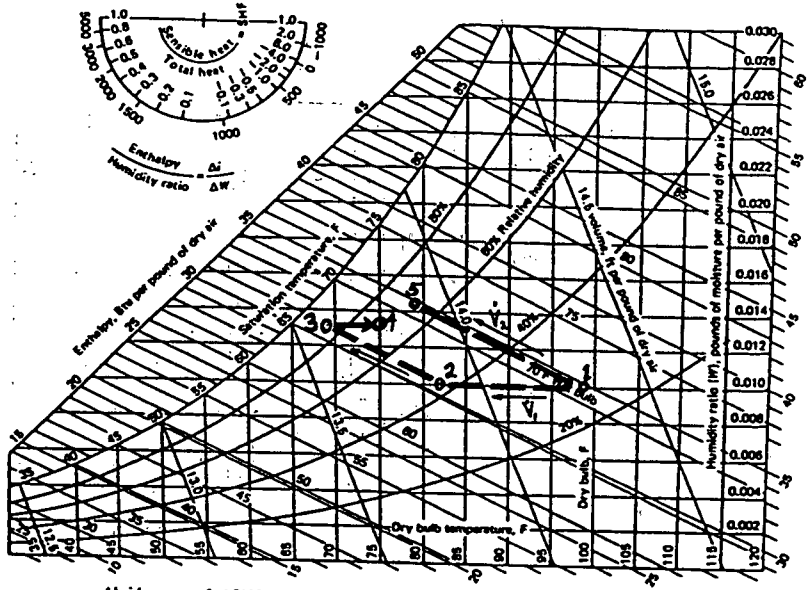

Abridgment of ASHRAE Psychrometric Chart I (Reprinted by permission from *ASHRAE Handbook of Fundamentals*, 1972).

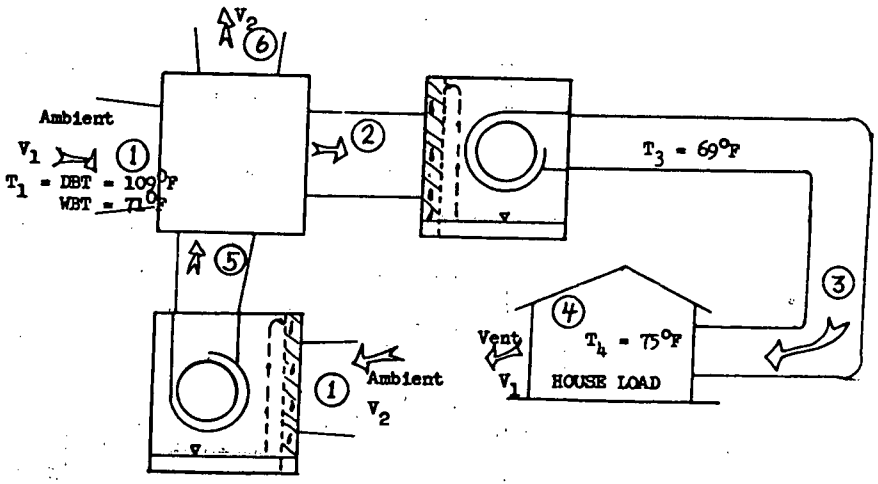

FIGURE 2 Two Stage Evaporative Cooler Unit with the Process Indicated on a Psychrometric Chart. Conditions are for the ASHRAE 1% Summer Design Point for Phoenix, with the House at 75°F.