International Energy Agency
Programme of Research and Development on Advanced Heat Pump Systems

Annex I:
Common Study on Advanced Heat Pump Systems

Final Report
Volume II: Technology Survey

Prepared by
D. L. Hodgett
G. Oelert (Project Leader)

Battelle
Battelle-Institut e.V. Frankfurt

IEA Restricted

International Energy Agency
Programme of Research and Development on Advanced Heat Pump Systems

Annex I:
Common Study on Advanced Heat Pump Systems

Final Report
Volume II: Technology Survey

July 1980

Prepared by
D. L. Hodgett
G. Oelert (Project Leader)

Battelle
Battelle-Institut e.V. Frankfurt

BF-R-63.896-1

IEA Restricted

Preface

This Volume II of the final report of the IEA Common Study of Advanced Heat Pump Systems deals solely with the technology survey.

Section 1 contains a short description of the work program.

Section 2 describes the status in each of the 13 participating countries with regard to heat pump technology, climate, heat sources and energy supply.

Section 3 contains the classification and description of heat pump types covered by the study, the definition of terms, symbols and performance criteria used in the study.

Section 4 describes the recent worldwide trends in heat pump research and development.

Section 5 and the Appendix describe the Case Studies, which were the heat pump systems chosen by the National Teams as of interest in their respective countries and which formed the link between the technology survey and market study.

Section 6 gives the assessment of the strengths and weaknesses of the advanced heat pump systems, particularly in regard to specific applications.

Section 7 contains the conclusions of the technology survey and the recommendations for further research and development.

The market study has been compiled in Volume III. Both Volumes II and III are restricted to the 13 participating members of the IEA Advanced Heat Pump study. The results of both the technology survey and market study have been summarised and compiled in Volume I, which will be published openly.

Contents

	Page
Preface	i
1. Introduction	1-1
1.1. Project Organisation	1-1
1.2. Objectives of the Study	1-1
1.3. Program of Work	1-3
2. Boundary Conditions (Evaluation of Quick-Look Reports)	2-1
2.1. Energy Supply and Demand	2-1
2.2. Climate	2-5
2.3. Possible Heat Sources	2-6
2.3.1. Ambient Air	2-6
2.3.2. Ground	2-11
2.3.3. Geothermal	2-14
2.3.4. Ground Water	2-14
2.3.5. Surface Water	2-17
2.3.6. Sea Water	2-18
2.3.7. Waste Water	2-18
2.3.8. Solar	2-19
2.3.9. Summary of Heat Sources	2-19
2.4. Current Status of Heat Pumps	2-21
2.5. Constraints on Heat Pump Utilisation	2-21
3. Technical Delimitation	3-1
3.1. Introduction	3-1
3.2. Classification of Heat Pump Systems	3-1
3.3. Applications	3-3
3.4. System Descriptions	3-6
3.5. Definitions of Terms and Performance Criteria	3-6

Page

4. Research and Development Trends 4-1
4.1. Background 4-1
4.2. Sorption Systems 4-2
4.2.1. Solar Driven Systems 4-4
4.2.2. Fossil Fuel Driven Systems 4-5
4.2.3. Waste Heat Driven Systems 4-6
4.3. Compression Systems 4-7
4.3.1. Electric Motor Driven Systems 4-10
4.3.2. Internal Combustion Engine Driven Systems 4-14
4.3.3. External Combustion Engine Driven Systems 4-17
4.3.3.1. Rankine-Rankine Systems 4-18
4.3.3.2. Stirling Cycle Systems 4-20
4.3.3.3. Brayton/Joule Cycle Systems 4-22
4.3.3.4. Ericsson Cycle Systems 4-23
4.3.3.5. Other Compression Systems 4-23
4.4. Other Heat Pump Systems 4-24
4.5. National R+D Trends 4-24

5. The Case Studies 5-1
5.1. Background 5-1
5.2. Case Study Format 5-3

6. Strengths and Weaknesses 6-1
6.1. Introduction 6-1
6.2. Performance 6-2
6.2.1. Design Point Performance 6-2
6.2.2. Below Design Point Performance 6-6
6.2.3. Auxiliaries 6-10
6.2.4. Above Design Point Performance 6-11
6.2.5. Seasonal Performance and Energy Saving 6-14
6.2.6. Cooling Performance 6-15

Page

6.3. Design 6-19
6.3.1. Size and Weight 6-19
6.3.2. Energy Demand 6-19
6.3.3. Safety 6-23
6.4. Operation 6-26
6.4.1. Control 6-26
6.4.2. Reliability 6-26
6.4.3. System Life 6-32
6.4.4. Service and Maintenance 6-33
6.4.5. Environmental Effects 6-35
6.5. Applications 6-38
6.5.1. Domestic 6-38
6.5.2. Commercial 6-42
6.5.3. District Heating 6-43
6.5.4. Industrial 6-49

7. Conclusions and R+D Recommendations 7-1
7.1. General 7-1
7.2. R+D Needs 7-4
7.3. Suggested R+D Programme 7-10
7.3.1. Heat Pumps with Vertical Soil Heat Source Systems 7-10
7.3.2. Development of Low Cost Sorption Heat Pump Systems 7-15
7.3.3. Development of Heat Activated Drives for Heat Pumps 7-18
7.3.4. Integration of Large Heat Pumps into District Heating Schemes 7-21
7.3.5. Advanced Heat Source Equipment 7-25
7.3.6. Establishment of a Heat Pump Centre 7-28
7.3.7. Applications of Heat Pumps in Industry 7-30

	Page
8. References	8-1
Acknowledgements	9-1
Appendix: The Case Studies	A-1

1. Introduction

The Common Study of Advanced Heat Pump Systems was initiated in October 1978 by the Committee on Energy Research and Development (CRD) of the International Energy Agency (IEA), Paris, as Annex 1 of an "Implementing Agreement for a Programme of Research and Development on Advanced Heat Pump Systems". The participating countries (13) were Austria, Belgium, Canada, Denmark, Federal Republic of Germany, Italy, Japan, Netherlands, Spain, Sweden, Switzerland, United Kingdom and the United States of America.

1.1. Project Organisation

KFA Jülich, as representative of the Federal Republic of Germany, was appointed to act as Operating Agent with Battelle-Institut e.V. (BIeV) Frankfurt as its assistant. BIeV was thus responsible for performing the study coordination, part of the state-of-the-art survey and the general project management on behalf of KFA Jülich. The role of the national teams (see Fig. 1-1) in the study is to collect data on the state-of-the-art and on advanced heat pump systems, and later to assess the market potential for chosen systems in their respective countries.

The market study part of the programme was assigned to the USA, which nominated Resource Planning Associates Inc. (RPA) as its assistant, responsible for the definition, organisation and coordination of the market study. The allocation of responsibilities is shown in Figure 1-1.

1.2. Objectives of the Study

The objective of the study is to collect and collate data on advanced heat pumps obtained internationally, to produce an evaluation of them, to assess which developments are desirable and thereafter to propose an international R+D programme. The study would

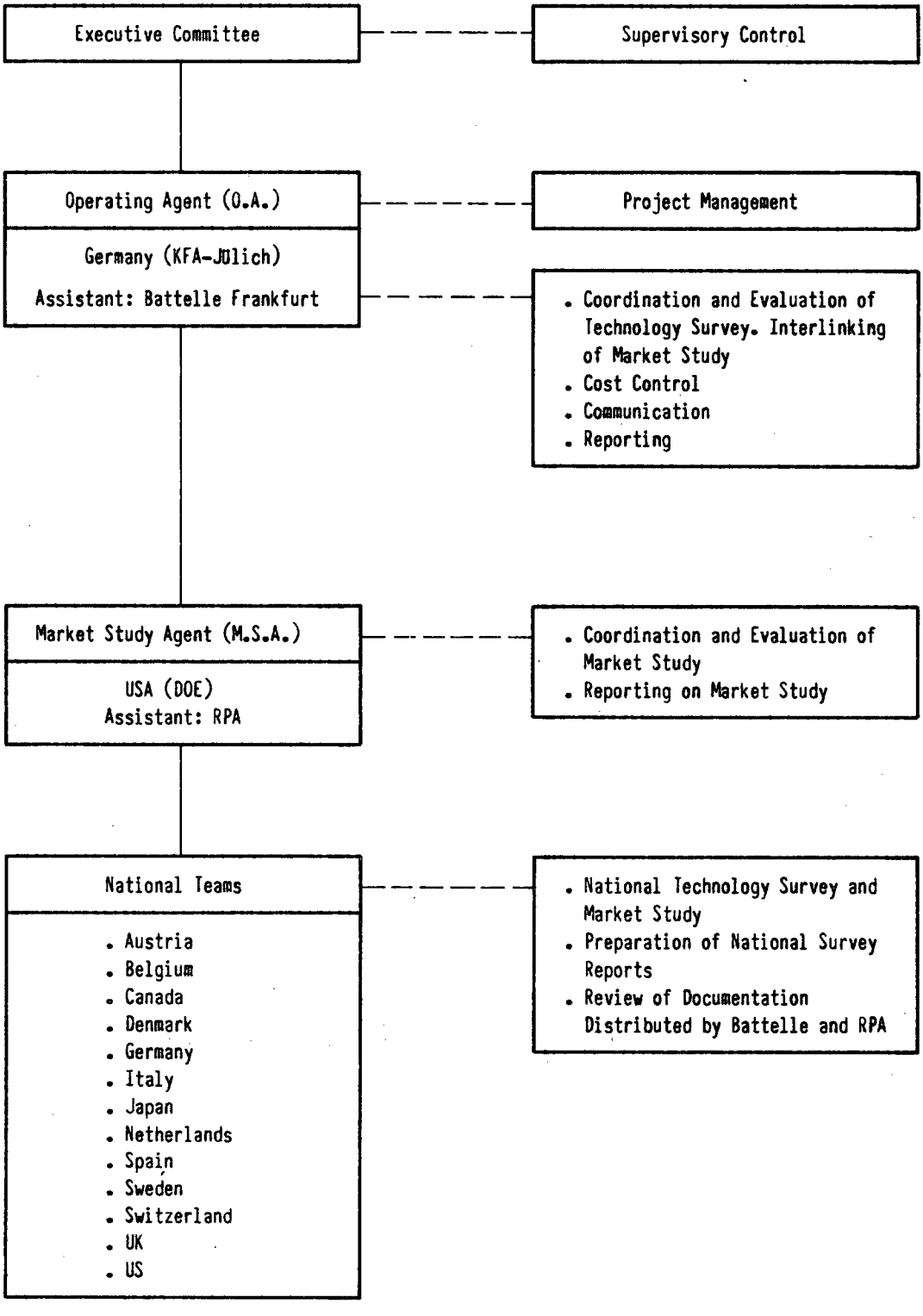

Fig. 1-1: Project organisation

encompass a critical analysis of existing heat pump systems in countries with major developments and also reveal whether experience gained with these and other technologies can be utilised for advanced heat pumps.

The international study, in which the experience and developments in many countries are collected and evaluated, is therefore intended to lead to

- better utilisation of existing experience,
- avoidance of unnecessary or undesirable developments,
- identification of trend setting developments,
- early identification of necessary research activities,
- establishment of internationally coordinated R+D programs.

1.3. Program of Work

Figure 1-2 gives the simplified project flowchart for the structure and coordination of the technology survey and market study.

The project consisted of the initial phase of the identification of the basic types of heat pumps and their classification, the market analysis and the determination of the state of heat pump development in each country. Thereafter the basic types of heat pumps of interest to the participating countries were identified and detailed technical and cost profiles prepared on each system of interest. This data was then used in the market study to estimate the potential market in each country for the chosen systems to year 2000, comparing them to the conventional competing systems prevailing in that country. Meanwhile the technical characteristics of the systems and development trends were evaluated in order to produce a ranking of their strengths and weaknesses and thereafter to propose an R+D program to augment their development. The results of the market study i. e. the estimated market for each system based on the technical and cost profiles produced earlier in the project, was then used to give weighting to the proposed R+D programme so

that development of the systems with the largest potential market would be accelerated.

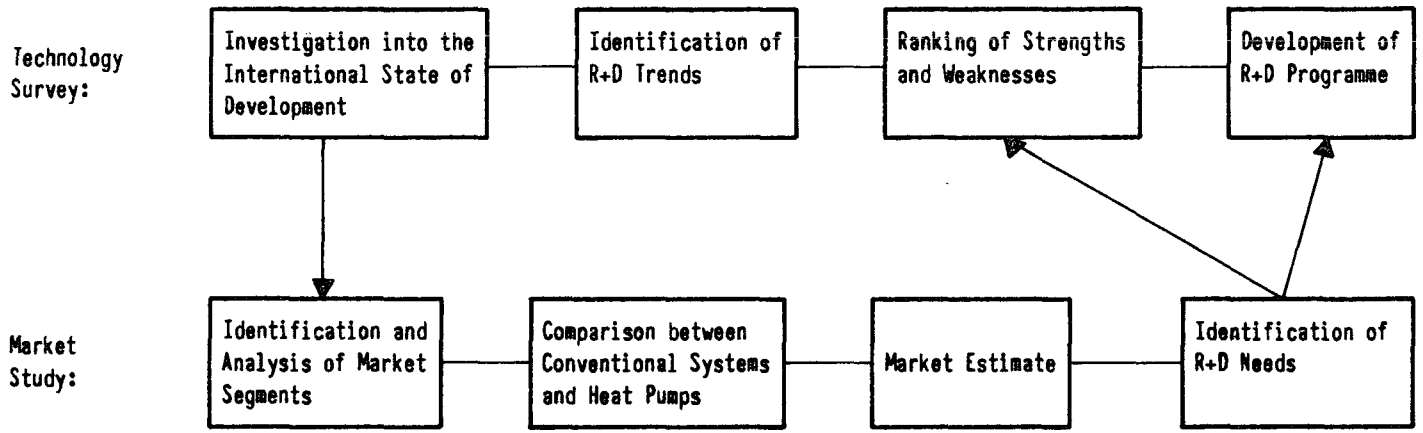

Fig. 1-2: Overall study description

2. Boundary Conditions (Evaluation of Quick-Look Reports)

The state-of-the-art technology survey consisted of an analysis of each participating country's situation by its national team with regard to energy supply and use, climatic data, availability of sources, the current status of heat pumps and R&D. This was followed by an in-depth analysis of examples of the most interesting heat pump types by the national teams and the technical study team. These heat pump systems (called Case Studies) are presented in Section 5.

2.1. Energy Supply and Demand

Table 2-1 gives the energy demand data-collected for the 13 participating countries. The information is incomplete because of the unavailability of data for some countries. It can be seen from Table 2-1 that there are certain characteristics which apply to most or all of the countries. These are

a) The high proportion of energy imported, except for the Netherlands, UK and USA which have large indigenous sources of gas, petroleum and coal.

b) The proportion of energy used for domestic and commercial heating is from 10 to 15 % for the warmer Mediterannean countries and Japan, and from 20 to 44 % for the northern European countries, USA and Canada.
These percentages can be misleading since the proportion of energy used for space and water heating depends on the quantities used for other purposes and in some countries industry or transportation are heavy energy users, and the actual quantities of energy used per capita vary considerably from country to country.

Country	Year	energy imported (%)	Domestic and commercial						
			demand all uses (%)	demand heating only (%)	% shares of sector				
					oil	gas	coal	elect.	other
Austria	1975	64	36						
Belgium	1975	78	34		47.6	14.2	12.4	10.8	5.0
Canada	1976		20	16	50	25	0.4	19	5.5
Denmark	1977	97		44	72		20		8
Germany	1977	63	44	34	59	15	7	15	4
Italy	1977	68	16	14	50	20.4	2.8	7	0
Japan	1975	88	22	12					
Netherlands	1977	42	18		18	72	0	9	0
Spain	1978	70	10	8	12	38	5	45	0
Sweden	1975	78	31		66	0	2	21	11
Switzerland	1977/78	79		48	86.3	5.7	1.3	3.0	3.7
UK	1976	24	25		19.4	38.7	16.2	18.0	7.7
US	1977	23	39	23	34	46	1	19	0

Table 2-1: Energy use in the participating countries

c) The proportion of oil used for domestic and commercial space and water heating is generally greater than 50 % (excluding the Netherlands, UK and USA).

From these statistics it can be concluded that, as already known, most countries depend heavily on imported petroleum for space and water heating and that only in the Netherlands, UK and USA are alternative fuels readily available. In these three cases there is heavy dependance on natural gas for space and water heating.

The situation looks quite different when the trends in energy demand are taken into consideration. Table 2-2 shows the anticipated changes in demand until 1990 in those countries for which data was made available. This demonstrates that almost all countries except Denmark expect to increase their energy demand by between 25 and 100 % during this period, with the overall (weighted average) demand increasing by 57 %. The greatest increases are anticipated for natural gas (esp. from the North Sea), nuclear and other sources (such as solar, biomass, geothermal etc) for which the large anticipated percentage increase is due to their insignificant use at present.

Even so most countries anticipate the demand for oil to increase by between 20 and 70 %. Only Canada anticipates being self-sufficient in energy.

Clearly, this scenario presents considerable strain on the energy supply and demand regime, the demand for energy in 1990 apparently being about 50 % greater than at present. The statistics presented in Table 2-2 reflect a position which may already have changed, since in some countries the nuclear option has been restrained below the level planned (eg. FRG) and in others the expected increases in nuclear energy (between 5 and 33 times in fifteen years) appear excessively optimistic.

Country	% Change (1975 - 1990)							
	total	oil	gas	coal	nucl.	hydro	D.H.[7]	other
Austria	+ 66	+ 68	+ 78	- 10	0	+ 102	106	-
Belgium	+ 68	+ 46			+ ?			
Canada	+ 78	+ 33	+ 100	+ 120		+ 200		
Denmark[1]	0	- 60	+[2]		+ 800			+ 600
Germany	+ 43	+332	+ 57	+ 16	+ 770			+ 48
Italy	not available							
Japan[3]	+100	+ 73	+1600	+ 265	+ 3300	+ 54	-	+1130
Netherlands	+ 38	+ 64	+ 2	0	- 10	0	0	0
Spain[4]	+ 46	+ 20	+ 353	+ 47	+ 95	- 2	-	-
Sweden[5]	+ 25	0		+ 186	- 100	0		+ 233
Switzerland[8]	+ 43	- 10	+ 460	+ 301	+ 530	+ 31	+ 1100	
UK[6]	+ 25	- 3.5	+ 70	+ 25	+ 100		+ 6	+ 50
USA	+ 51	+ 51	- 8	+ 91	+ 488	+ 32	-	-
Total	57 %							

Notes 1) 1975/1995, space heating only
2) From 0 % of space heating to 40 % by 1982
3) 1975/2000
4) 1977/1987
5) 1978/1990 alternative A: No nuclear power (no longer valid since Referendum of March 1980)
6) domestic sector only
7) district heating
8) 1975/2000, Scenario IIIcG

Table 2-2: Projected energy demand (1975-1990)

Tables 2-1 and 2-2 indicate that since in most cases domestic and commercial energy consumption for space and water heating represents a large percentage (between 10 and 40 %) of energy demand, that a higher proportion of this (20 % to 70 %) is oil-fired, and that this demand is expected to increase. Natural gas and nuclear power are seen to be high growth points and are expected to be substituted for oil in many countries. The latter may not, in fact, grow at the anticipated rates. Thus gas will carry an increasing burden in this market, although oil is still likely to supply a substantial proportion.

These trends emphasise the necessity to conserve energy in the domestic and commercial space and water heating sectors, and one possible means of doing this is by substituting a fossil-fuelled heat pump for the normal fossil-fuelled heating system (boiler, furnace etc.). The possibility of using electrically driven heat pumps for this purpose is considerably restricted by two factors.

1) The overall inefficiency of the fuel-to-electricity-to-heat pump-to-heat system when the electricity is produced by burning fossil fuels.

2) The decreasing performance of the heat pump as the source temperature decreases (air-air or air-water electric heat pumps being the most common type) makes a back-up heating system necessary. This operates at a time when demand on the electricity supply system is highest.

2.2. Climate

Climate is, of course, the prime reason for a heating (and sometimes cooling) demand. Comparison between the heating and cooling requirements of the 13 participating countries is made difficult by the widely differing climate within a country, and also by the different methods of collecting weather and heat source data in each country.

Table 2-3 gives a summary of the weather characteristics from the Quick Look Reports.

2.3. Possible Heat Sources

2.3.1. Ambient Air

The data on climate also shows the characteristics of air as a heat source for heat pumps. In Table 2-3 and 2-4 it can be seen that air is an inadequate heat source for heat pumps for all regions except region 5, in that at low temperatures, when the demand for heating is highest, the very cold source temperature results in a very low coefficient of performance (COP) and heating capacity. In the case of region 4, and to a lesser extent region 3, the air humidity is excessively high in winter, producing an accumulation of frost on the evaporator and decreased performance due to reduced heat transfer (and/or an extra expenditure of energy to defrost the evaporator).

Thus air as a heat source, though providing the simplest option, suffers from the disadvantage of reduced capacity at low temperature which is in opposition to the heat demand characteristic. The options (Fig. 2-1) are either to size the heat pump for the maximum load, or to provide a back-up heating system (such as a fossil fuelled boiler or electric heater) which is operated in parallel with or as an alternative to the heat pump below a predetermined air temperature. The former results in a heat pump which is grossly oversized for the demand on all but the coldest day over a 25 or 30 year period. Consequently the heat pump capital cost is excessively high, and the heat pump has either to operate intermittently, or be capacity controlled, during the normal winter conditions around T_{mean}, the mean winter air temperature.

Alternatively the heat pump is sized for the mean winter air temperature, T_{mean}. This produces a situation where the heat pump cannot meet the heat demand for all air conditions below this and so

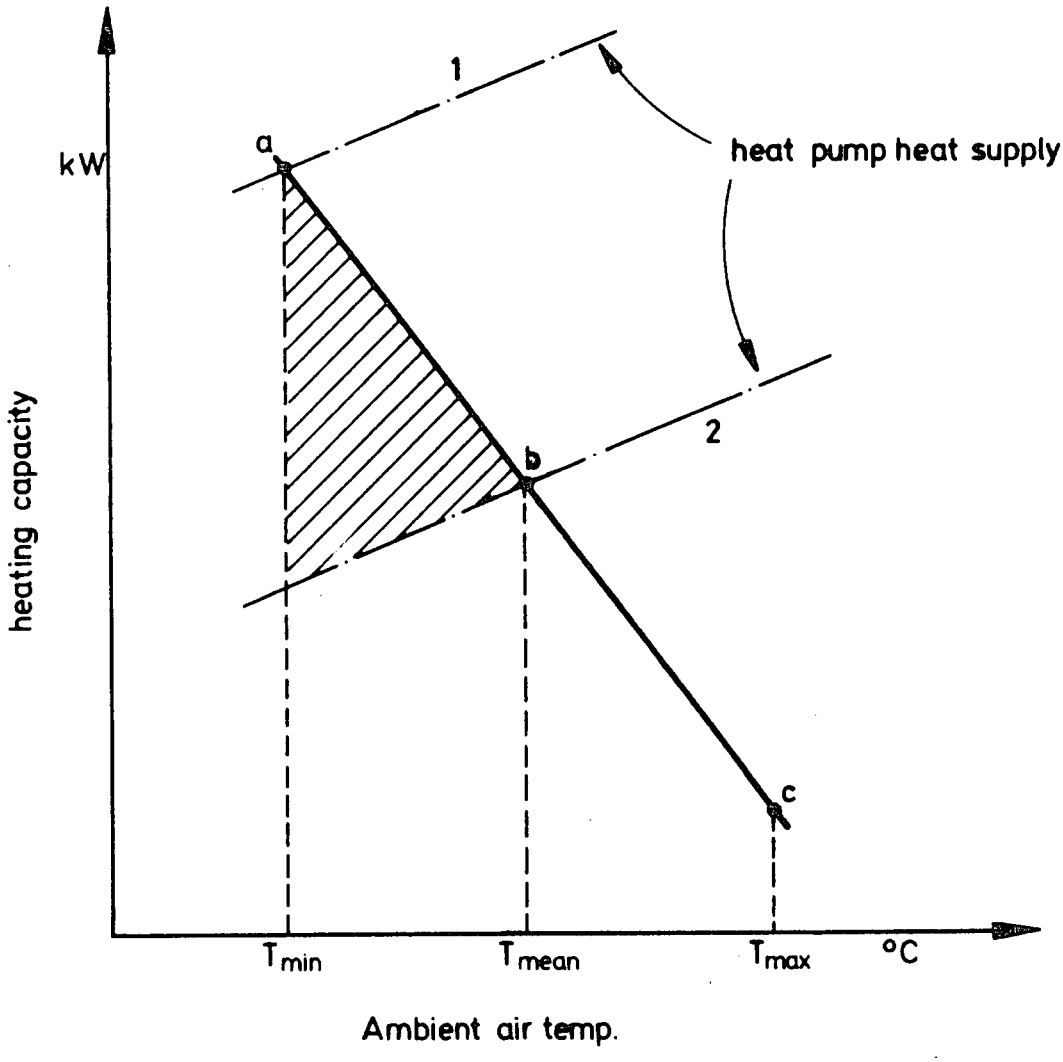

Case 1: heat pump sized for max. demand

Case 2: heat pump sized for mean demand

a-b-c: heat demand

Fig. 2-1: Air-source heat pump sizing

Country	No. of Degree days (20°C)	Daily minim.[3] air temperat. (°C)	Minim. monthly[4] average air temp. (°C)	Average winter humidity at 0°C (%)
Austria	3200/3800	-14/-20	N/A[2]	N/A
Belgium	2200	N/A	3	N/A
Canada	3000/6100[1]	-10/-40	N/A	N/A
Denmark	2800	-10	2	90 %
F.R.G.	3000/3700	-10/-16	N/A	N/A
Italy	N/A	N/A	N/A	N/A
Japan	N/A	+ 4/-12	3	70 %
Netherlands	3000[1]	-10	1,7	90 %
Spain	300/2200	- 3/+ 2	+3/+9	70/80 %
Sweden	3000/6400	-12/-38	N/A	N/A
Switzerland	2500/4600	- 2/- 9	N/A	N/A
UK	2800/3100	- 7/-11	-1	90 %
USA	0/12000 (42 states 2000/8000)	N/A	N/A	N/A

Notes:
1) 18°C base
2) N/A - not available in QLR in this form
3) 25/30 year minimum average daily temperature
4) 25/30 year minimum average monthly temperature

Table 2-3: Climate and air source data

a secondary, or back-up, heat supply has to be provided involving considerable extra capital cost. The heat pump is still oversized for temperatures above T_{mean}.

The design point can be chosen between these two extremes, though the latter is the more normal choice. In some circumstances, e.g. integration of a heat pump system into an existing heating scheme, the back-up is already there in the form of the existing hot water boilers. Alternatively a small additional boiler can be provided which operates in parallel or alternatively to the heat pump under extreme weather conditions and the sizing of the heat pump and back-up boiler are such that about 70 % or more of the total heat requirement is provided by the heat pump /1/.

An extra complication, and one that severly affects existing designs of air source heat pumps, particularly in maritime regions, is that of frosting of the evaporator coil. This results in reduced heat flow, a lower evaporating temperature and so reduced coefficient of performance and heating capacity.

Defrosting can be achieved by reversing the heat pump cycle, operating subsidiary defrosting heaters located in the evaporator, or stopping the heat pump for a period sufficient to melt the frost. Experience has shown that designs of heat pumps for the US market tend in European conditions to have excessive operation of the defrost cycle due to the very high humidity in winters at ambient temperatures of $-2^{o}C$ to $+6^{o}C$ /2/. The climatic data in Tables 2-3 and 2-4 show that in region 4 frosting, and subsequent actions to defrost, would have a serious effect on the seasonal performance factor (SPF), the annual average coefficient of performance, since the majority of operating time would be under these conditions.

For regions 1, 2 and 3 the winter minimum and mean temperatures are very low ($T_{min} = -12^{o}C$), so that an air-source heat pump would have a low SPF and would need a large capacity back-up heating system as well.

Region	Areas	No. of degree days	Annual min. Temp. (°C)	Winter mean R.H. (%)
1.	N. Sweden Mid. West Canada Mid. West USA Alaska	6000	- 30	-
2.	East USA and East Canada	4000/6000	-20/-30	-
3.	Austria, Switzerland S. Germany, West Coast USA and West Canada	3000/4000	-12/-20	80
4.	S. Sweden, N. Germany Denmark, Holland Belgium, UK	2500/3500	- 7/-12	80
5.	Japan, Italy, Spain South USA	2500	- 5	80

Table 2-4: Approximate climatic regions

Thus region 5 (Japan,Spain, Italy, South USA) provides the best conditions for air-source heat pumps having a high mean and minimum air temperature and so a good SPF and most likely not requiring a back-up system.

Some of the advanced heat pump systems have a favourable design feature in that the evaporator heat pick-up is small compared to the total heat delivered by the system, which makes them less sensitive to icing.

2.3.2. Ground

Data on the ground as a possible heat source is not available for all the participating countries since in many little work has been done to determine ground temperatures and the suitability as a heat source. Table 2-5 summarises the data available, and shows that the ground is not so variable a heat source as air, the ground temperature at 1 metre depth having a minimum in the region +2 to +8°C. Figs. 2-2 and 2-3 show in detail the temperature fluctuation at the surface and 1 metre depth measured in southern Germany /3/ and Fig. 2-4 for several locations in Canada at 1.5 m and 3 m depth /4/. Table 2-6 shows the variation between mean and minimum temperatures at 0.6 m depth in Belgium.

From this data it is clear that below about 1 metre the ground provides a good heat source, having a maximum heating season temperature in September (between 9°C and 15°C) and a minimum in February to April (between 1°C and 7°C). The problem with the ground as a heat source is recovering the heat with a low capital cost, compact system. In the Netherlands, where 90 % of the ground has a water table in winter less than 1.4 m deep, this is not difficult, but in other countries with very variable geological structures and thermal properties of soil there are considerable problems. Also it has been normal practice to use horizontal ground coil arrays at 1.0 to 2.0 metres depth, and this requires between 30 m^2/kW /5/ and 80 m^2/kW heat recovered.

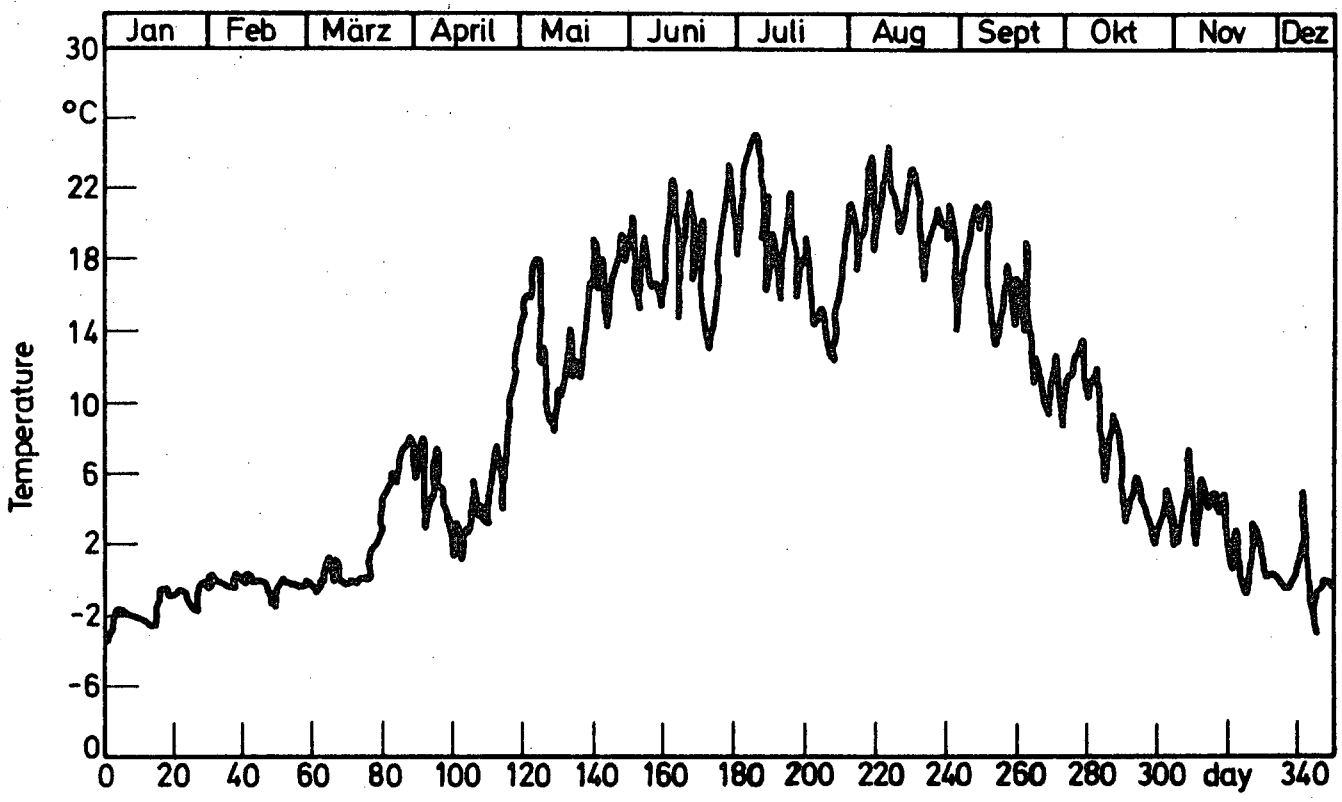

Fig. 2-2: Measured temperature at the surface of soil, Munich /3/

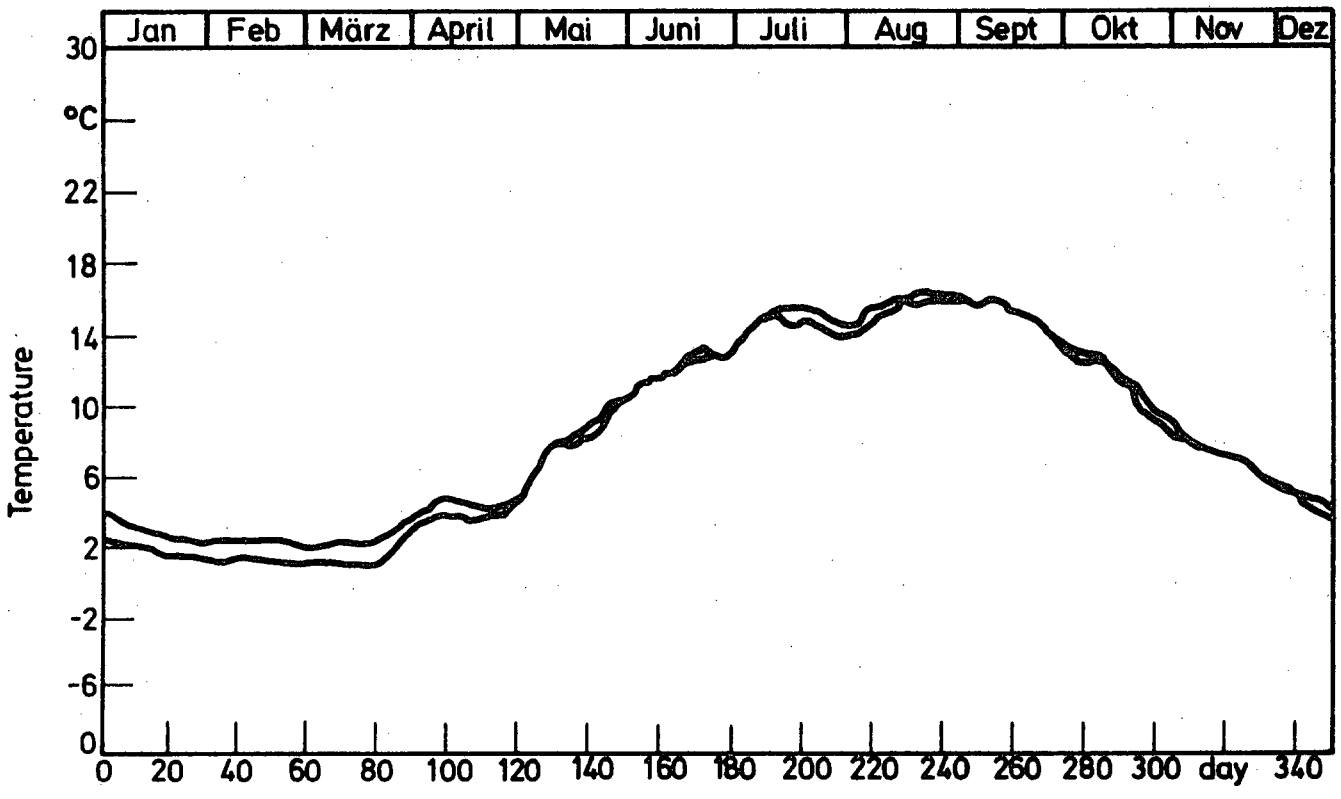

Fig. 2-3: Measured temperature 1m below surface of soil, Munich /3/

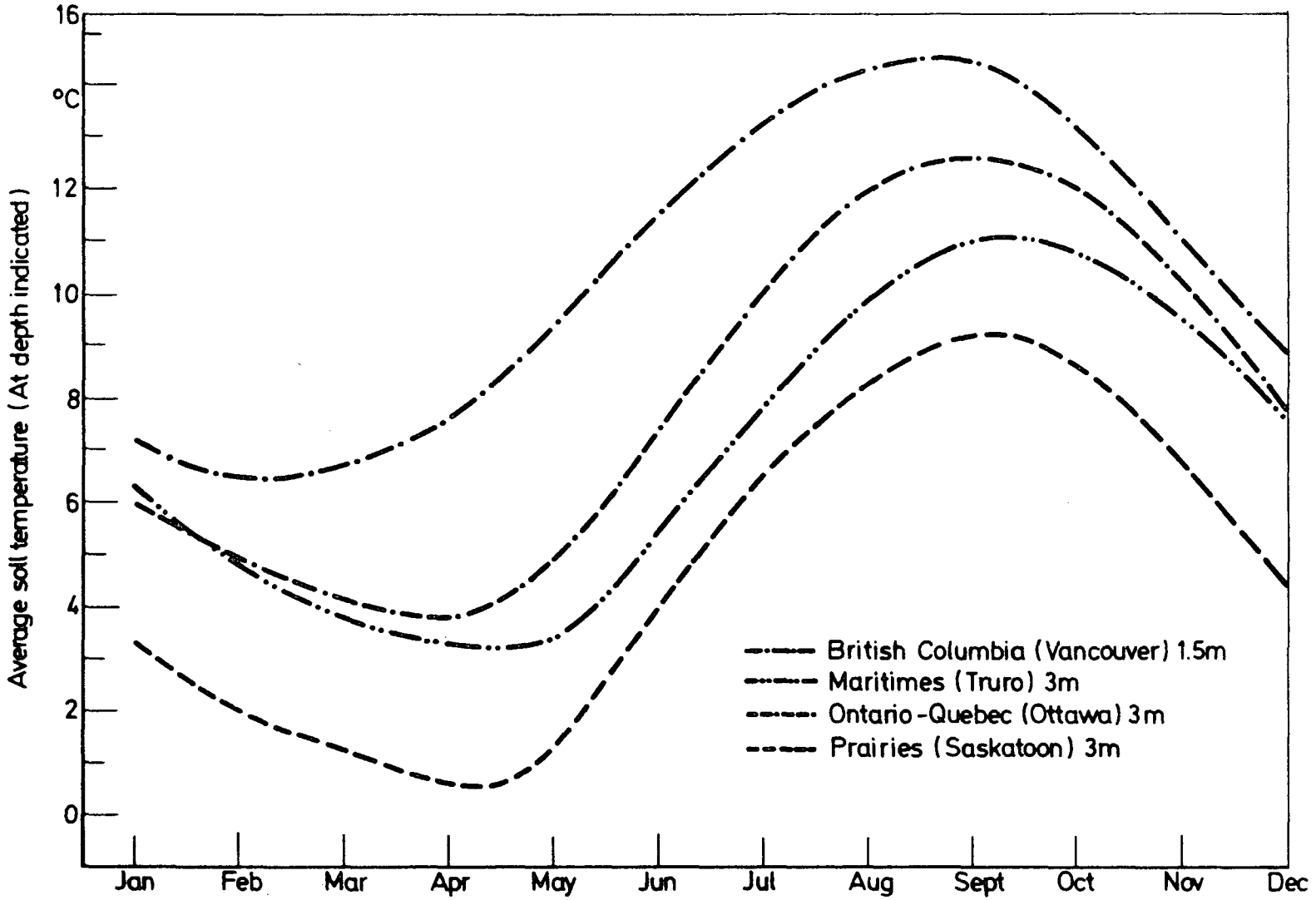

Fig. 2-4: Average soil temperature at depth indicated for various Canadian regions /4/

Thus an average domestic system (for a 90/120 m^2 living space) would need up to 500 m^2 ground area, which is considerably in excess of that available for the majority of domestic premises, which are located in urban areas.

An alternative, less developed, method is to use vertical coil arrays to a depth of about 5 to 40 m. This has the advantages of a less variable source temperature and a much smaller space requirement. However, vertical ground source systems need summer recharging and considerable R&D is required on them to enable accurate predictions of performance and coil sizing and reductions in installation costs to be achieved. Again, those heat pump systems requiring small evaporators could prove attractive with the ground source.

2.3.3. Geothermal

Geothermal heat sources for heat pumps have been utilised in the past, notably in France, but no examples of installed or planned systems were identified in the participating countries. Geothermal sources are extremely localised and rarely coincide with areas of dense population and often the water has a high salt content giving problems with heat exchangers. However, sources with temperature ranges 30 to 50°C exist in parts of Switzerland, Spain, U.K., Japan and Canada and could be utilised when these are close to population centres, giving high SPF's due to the constant (and high) temperature source.

2.3.4. Ground Water

Ground water, i.e. water at depths of up to about 80 metres, is to be found in most countries, with depths being usually less than 50 metres. Temperatures (Table 2-5) are generally in the range 5°C to 12°C, so that although in principle ground water is an ideal source for heat pumps, several aspects of the use of ground water severely restrict its use:

Country	Temperatures (°C)								Solar *)		Other
	ground		ground water		surface water		sea water				
	min.	max.	min.	max.	min.	max.	min.	max.	min.	max.	
Austria	2 (depth 1 m)	14 (depth 1 m)	6	12	2	11	Not applic.	Not applic.	3.6	15	
Belgium	2 (depth 0.6m)	12 (depth 0.6)			N/A**)	N/A	N/A	N/A	3.6	17	
Canada			N/A	N/A	2		N/A	N/A	N/A	N/A	sewage, waste water
Denmark	3	16	10	10	N/A	N/A	N/A	N/A	N/A	N/A	sewage at 10-18°C
Germany	7 (depth 1.7m)	20 (depth 1.7m)	7.5	10	2	15	N/A	N/A	1.8	16	sewage
Italy	N/A	N/A	N/A	N/A	N/A	N/A	N/A	N/A	2.5/6.6	20	
Netherlands	see ground water	see ground water	5.5 (depth 1 m) 10/12 (depth 10m)	15.2	1.4/3.6	16/17	2.8	17	1.7	17	
Spain	8 (depth 1 m)	20 (depth 1 m)	8	12	10	20	10	26	12	18	geothermal at 40°C
Sweden	0/+2 (depth 1 m	10/12 in mid Sweden)	5	10	1/2	15	+ 4		1	9	industrial waste water at 20°C
Switzerland	N/A	N/A	8	11	2		Not. applic.	Not applic.	N/A	N/A	geoth. at 30-41°C, ind. waste water, sewage at 6-8°C
UK	3 (depth 1 m)	14 (depth 1 m)	N/A	N/A	3.2	15.4	2	18	2.5	16	
USA	N/A	N/A	7	24	N/A	N/A	N/A	N/A	N/A	N/A	
Japan	N/A	N/A	12 (depth 50m)	20 (depth 50m)	N/A	N/A	N/A	N/A	6.7/12	12/20	industrial waste water

*) MJ/m^2 day
**) N/A = Not available

Table 2-5: Heat sources: heating season data only (September to May inclusive)

	J	F	M	A	M	J	J	A	S	O	N	D
Average soil temp. at 60 cm (^{o}C)	4.7	4.1	5.7	7.8	11.7	15.0	16.6	17.2	15.5	12.3	8.7	6.3
Minimum soil temp. at 60 cm (^{o}C)	1.9	1.0	1.3	4.0	7.0	11.9	13.0	15.0	12.1	7.7	5.0	2.9

Table 2-6: Soil temperatures in Belgium

a) Often the water has a high iron content or is of extreme alkalinity, producing fouling or corrosion problems with heat exchangers.

b) The flow rate required for a single family house is about 2.5 m^3/h, for a water temperature drop over the evaporator of 5 K, so that ground water can only be used where the housing density is low.

c) Local regulations usually require the water to be returned to the ground, thus necessitating a second remote borehole per unit.

The Netherlands presents a special case where the water table is in winter very close to the surface. The water near the coast is contaminated by sea water and care has to be taken over its use to avoid contamination of the soil near the surface.

2.3.5. Surface Water

Surface waters, i.e. rivers and lakes, have been investigated in many countries as possible heat sources /1, 6, 7/, but suffer from the major disadvantage that the source either freezes in winter or the temperature is very close to zero (typically 2 to $4^{o}C$). Consequently the temperature of the source can only be reduced by 1 K and extreme care has to be taken to avoid freezing on the evaporator.

Thus rivers and lakes are unsuitable as possible heat sources for heat pumps except where they are thermally polluted by industry or power stations and then the thermal waste itself is a better source (see Section 2.3.6.).

2.3.6. Sea Water

Sea water, as a possible heat source has been recently investigated /8/, and has been shown to be a very good heat source under certain conditions. At depths of 50 m the sea temperature is constant at around 5 to 6°C, and ice formation is generally not a problem. In the Baltic Sea, where the salinity is low, the freezing point is near 0°C and so it is similar to rivers and lakes as a heat source. The North Sea, with a freezing point of -1 to -2°C, except near river estuaries, and a mean winter temperature of about 5 to 6°C presents a good heat source. In the Netherlands the sea lakes are also possible sources.

2.3.7. Waste Water

Waste water, or effluents, offer an important and as yet underutilised heat source. Effluent from public sewers has been found to be in the temperature range of 10 to 20°C throughout the year giving a good seasonal performance factor /1/, and a heat pump installation is under construction in Denmark utilising this source. Condenser cooling water for electricity generating plants could also provide an almost thermally constant heat source for heat pumps /9/, as could warm effluent from industrial sources.

Waste water sources are generally highly localised, i.e. are only available for use when they are located near population centres, and in the case of electricity generating plants the heat pump installation has to comply with the operating criteria of the electricity utility. For example it is usual in countries such as the U.K., to utilise large thermal and nuclear power stations remote from population centres for the base load supply of electricity and to only use smaller station in urban centres for peak load operation. In other countries, such as Scandinavia, the power plants in urban areas are often combined heat and power plants, i.e. non-fully condensing, and so are unsuitable as low grade heat sources for heat pumps.

2.3.8. Solar

Solar energy, either as direct of diffuse radiation, is similar to ambient air in its characteristics since the former is the driving force for the latter. A solar source heat pump, or a combined solar/heat pump heating system, has all the disadvantages of the air-source heat pump, i.e. low SPF and extreme variability, with the additional disadvantage of high capital cost. Table 2-5 shows that the mean radiation level reaches a minimum of about 1 to 7 MJ/m^2.day, which generally occurs in December in the northern hemisphere. The lower figure would give about 1/4 of the heat supply needed for a house with assumed collector area equal to the floor area of the house. Even with a high coefficient of heat pump performance (COP=1.5) the system would be inadequate without a heat store or back-up system. The lower figure of 1 MJ/m^2.day applies to most of Northern Europe, North and Eastern USA and Canada. The high figure of 7 MJ/m^2.day applies to South Europe, Japan and South USA and so solar assisted of solar source heat pumps could be applied there. The variability of solar radiation, which is greater than that of ambient air, and its higher capital cost nevertheless make it unlikely that it will prove to be a major heat source for heat pumps for existing buildings.

2.3.9. Summary of Heat Sources

In Table 2-7 is summarized the suitability of heat sources by climatic region, heat pump output capacity (using standard sizes of 3, 10, 20, 50, 100, 400, 2000 kW for simplicity), utilisation, and also the major disadvantages and aspects that need further R&D.

It is clear that the most interesting heat sources, requiring further investigation, are ground (in particular with respect to vertical coils), waste water, sea water and ambient air, while solar assisted heat pumps could be applied in South Europe, Japan and the US.

Source	Order of suitability			disadvantages	R+D needed
	climatic regions *)	heat pump output (kW)	utilisation		
ambient air	5, 4, 3, 2, 1	3, 10, 20, 50	single family house, multi family house	frosting, poor SPF	defrost control optimisation
ground	all	10, 20, 50, 100, 400	single family house, multi family house, schools	cost, variability of ground parameters	all aspects of vertical source
geothermal	all	100, 400 2000	district heating, commercial, multi family house	cost, highly localised , fouling	
ground water	all	50, 100, 400	commercial, multi family house	cost, fouling	
surface water	5	all	all	highly localised, low SPF, cost	
sea water	5, 4, 3	2000, 400, 100, 50	district heating, commercial, multi family house	highly localised, cost	
waste water	all	2000, 400, 100, 50	district heating, commercial, multi family house	highly localised, fouling cost	availability and suitability of sources
solar	5, 3	3, 10, 20, 50	single family house, multi family house	cost, size	low cost solar roofs

*) see Table 2-4

Table 2-7: Summary of heat sources

2.4. Current Status of Heat Pumps

Table 2-8 summarises the data collected by the national teams on the current number of heat pumps installed in their countries, and also data collected by another source /10/. It is clear from Table 2-8 that the majority of heat pumps ($\simeq$ 99 %), whether reversible air conditioners are included or not, are in the USA domestic market. The total number of heat pumps in the world is therefore at present about 4×10^6, if reversible airconditioners are included, and 0.8×10^6 if they are excluded. Though the data is incomplete (many countries clearly undercounting), and the survey only covers 13 of the industrialised nations, nevertheless the USA figures are so large as to render the rest of little significance.

However, the table also shows the large number of heat pump instalations in Europe for swimming pool heating etc., which are generally large installations. Although gas and diesel engine driven heat pumps have become well established for this type of installation, only the Federal Republic of Germany was able to provide figures on the number of installed non-electric driven compression heat pumps. Clearly, these and the absorption heat pump, are still at the prototype/demonstration stage.

2.5. Constraints on Heat Pump Utilisation

The constraints on heat pumps, other than technological ones or ones of a technological origin (capital cost, performance, controlability, etc.) or those related to availability of sources, are those of a legal, economic, financial or social nature. Several of these can readily be identified and some have been thoroughly investigated previously.

The limitations to the growth of the utilisation of electrically driven heat pumps have been described by Lorentzen /11/. These are related to the relative cost of electricity to the cheapest alternative fossil fuel, the cost penalties associated with the maximum

Country	Data source*)	Electric			Gas		Oil	Est. max. total
		domestic	swimming pools leisure centres, schools	commercial	engine driven	absorption	engine driven	
Austria	QLR	16	34	-	-	-	-	50
Belgium	QLR	1000	50	-	-	-	-	1050
Canada	QLR /10/	0.1 % (>6000) 8000	- 75	- 700	- -	- -	- -	8775
Denmark	/10/	1500	-	60	-	-	-	1560
Germany	QLR /10/	- 800	- 780	- 91	35 -	1 -	65 -	~ 6000
Italy	QLR	100**)	-	-	-	-	-	100
Japan	not available							
Netherlands	QLR /10/	10 2	- -	100 1	- -	- -	- -	110
Spain	QLR	~ 1900**)	-	900**)	-	-	-	~ 2800**)
Sweden	QLR /10/	- 1200	- -	- 2000	- -	- -	- -	1000-2000 3200
Switzerland	QLR /10/	600 100	- -	- 60	- -	- -	- -	600 160
UK	/10/	27	-	7	-	-	-	34
USA	QLR /10/	~3,700,000**) 750,000	- -	- 1067	- -	- -	- -	~ 3,700,000 751,067
total	max.	$\sim 3.7 \times 10^6$ $\sim 0.8 \times 10^6$	939	4086	35	1	65	$\sim 3.7 \times 10^6$ $\sim 0.8 \times 10^6$

*) Data Sources: QLR - Quick-Look Reports from national teams: /10/ - World Energy Conference
**) Includes reversible (heating/cooling) systems

Table 2-8: Current status: number of heat pumps installed

electricity demand, and the effect of the widespread use of heat pumps on the electricity supply system. This would result in an increased demand when it is already at a peak.

The financing of capital investment generally has the effect of encouraging energy production (power plants, oil fields exploration, etc.) and discouraging energy conservation in the Western world. For instance, power plants are usually financed at low rates of interest over long amortisation periods while the end user has to pay high interest rates over short amortisation periods to conserve the same amount of energy /10/.

The availability of fuels is an important factor influencing the likely use of heat pumps. The present situation in most countries is that a high proportion of space and water heating is done by oil (Table 2-1) and this situation cannot be expected to persist over the next few decades. As oil supplies become restricted they are most likely to be reserved for prime uses, such as transport, chemical manufacture etc. In many countries natural gas is already substituted for oil and also for direct or storage electrical heating systems, and this trend is expected to continue over the next decades.

Over the next few decades the supply, cost and availability of electricity in most countries is very strongly influenced by the growth of the alternatives of nuclear or coal fired electricity generation. Strong growth of the former could lead to an increased availability (and possibly lower cost relative to oil) of electricity, which in turn could lead to a resurgence of interest in electrically driven heat pumps. The alternative, coalfired electricity generation, is more likely to produce high cost electricity and lead to an increase in the use of combined heat and power generation. In the second case the energy conservation from the use of small electrically driven heat pumps is likely to be minimal.

Another constraint on the use of heat pumps is the present practice in most European countries to use high temperature (60 t 100°C) supply water in both individual and district heating schemes. This results, when a heat pump is substituted for a fossil-fuelled boiler, in a low COP and hence a low SPF. The use of lower temperature water (at 40 t 60°C) in existing individual systems (which are often oversized) and in new systems would be greatly assist heat pump utilisation.

An in-depth analysis of the heat pump implementation barriers has been made within the market study, Volume III of this report.

3. Technical Delimitation

3.1. Introduction

As described in Section 1.2. the study was required to consider all types of heat pump systems under development. For this purpose a system of technical delimitation was developed which enabled all the major systems to be analysed and compared following a unified structure. The technical delimitation also serves the purpose of defining technical terms and performance criteria which are used in subsequent sections for the detailed system studies.

3.2. Classification of Heat Pump Systems

Figure 3-1 describes the range of heat pump systems considered in the study. Each heat pump system consists of a heat pump cycle (or subsystem) and a drive cycle (or subsystem). In the case of mechanical systems the subsystems are usually separate units connected by a mechanical linkage or shaft to the heat pump compressor, while in absorption systems the drive cycle is that part of the thermodynamic cycle which by absorption and desorption provides compression and expansion of the volatile work fluid.
The upper part of Figure 3-1 describes the range of heat pump cycles which can be used for the heat pumping subsystem, classified by whether they are activated by heat or by work, both heat and work, or electricity (which is of course a form of work). The lower part of Figure 3-1 describes the cycles which can be used for the drive subsystem, classified by the source and type of activating energy, i.e. solar, internal combustion or external combustion of fuels. Figure 3-1 also classifies the heat pump system by the quality of the activating energy, from those on the left of the diagram requiring low grade energy such as solar radiation to those on the right requiring pure exergy i.e. electricity. In between lie those requiring heat at higher level, or availability, than solar and those requiring mechanical work.

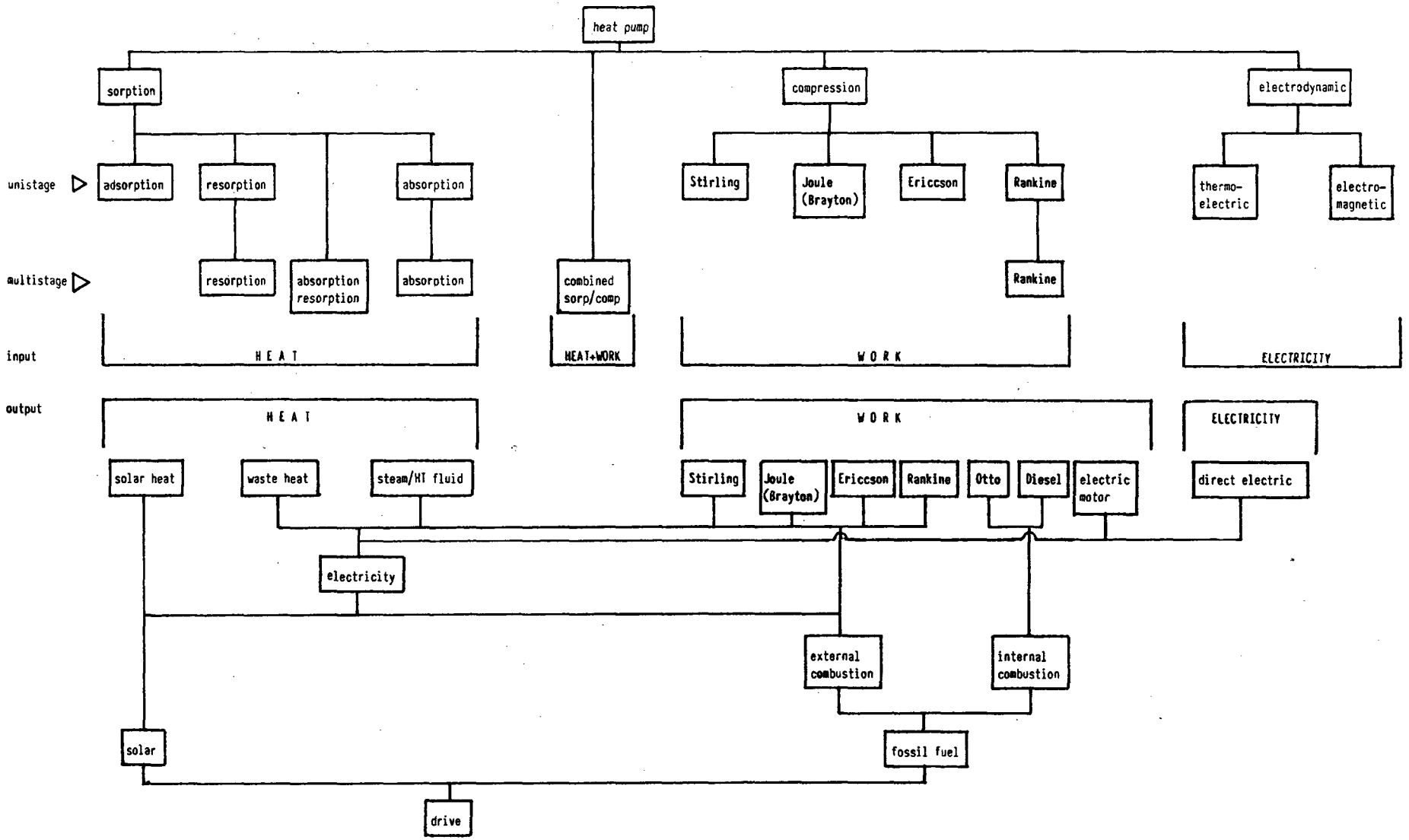

Fig. 3-1: Range of drive and heat pump cycle combinations

In Figure 3-1 the heat pump subsystem and drive subsystem are arranged so that those using the same thermodynamic cycle are adjacent to each other. This does not imply that they form exclusive combinations, since it is technically feasible to arrange combinations of any drive subsystem with any heat pump subsystems as long as the mode of energy transfer, i.e. heat or work, is compatible. The selection of system then depends on the application and the available energy sources for both the drive and the heat pump.

3.3. Applications

Figure 3-2 shows the range of applications covered in the study with the approximate range of heat pump power outputs required for each application. Also marked on Figure 3-2 are the size ranges selected for the case studies, i.e. the output powers approximately corresponding to the major applications envisaged, and which were therefore used as inputs to the market study (see Section 5).

Figure 3-3 shows the distribution temperatures required for each application area, although it is not necessary that the heat pump subsystem itself should have this output temperature. For instance, an engine driven system, e.g. Diesel-Rankine, can achieve high output temperatures if the engine exhaust is used to uprate the output of the heat pump. Alternatively, a "bivalent" system can be used in which a fossil-fuelled boiler operates in series with the heat pump, either simultaneously (called "bivalent parallel") alternatively (called "bivalent alternative"), to boost the output temperature to the maximum required during peak heat load conditions.

Another factor influencing the performance and choice of systems is the availability of suitable heat sources. These have already been described in Section 2.3. and summarised in Table 2-5.

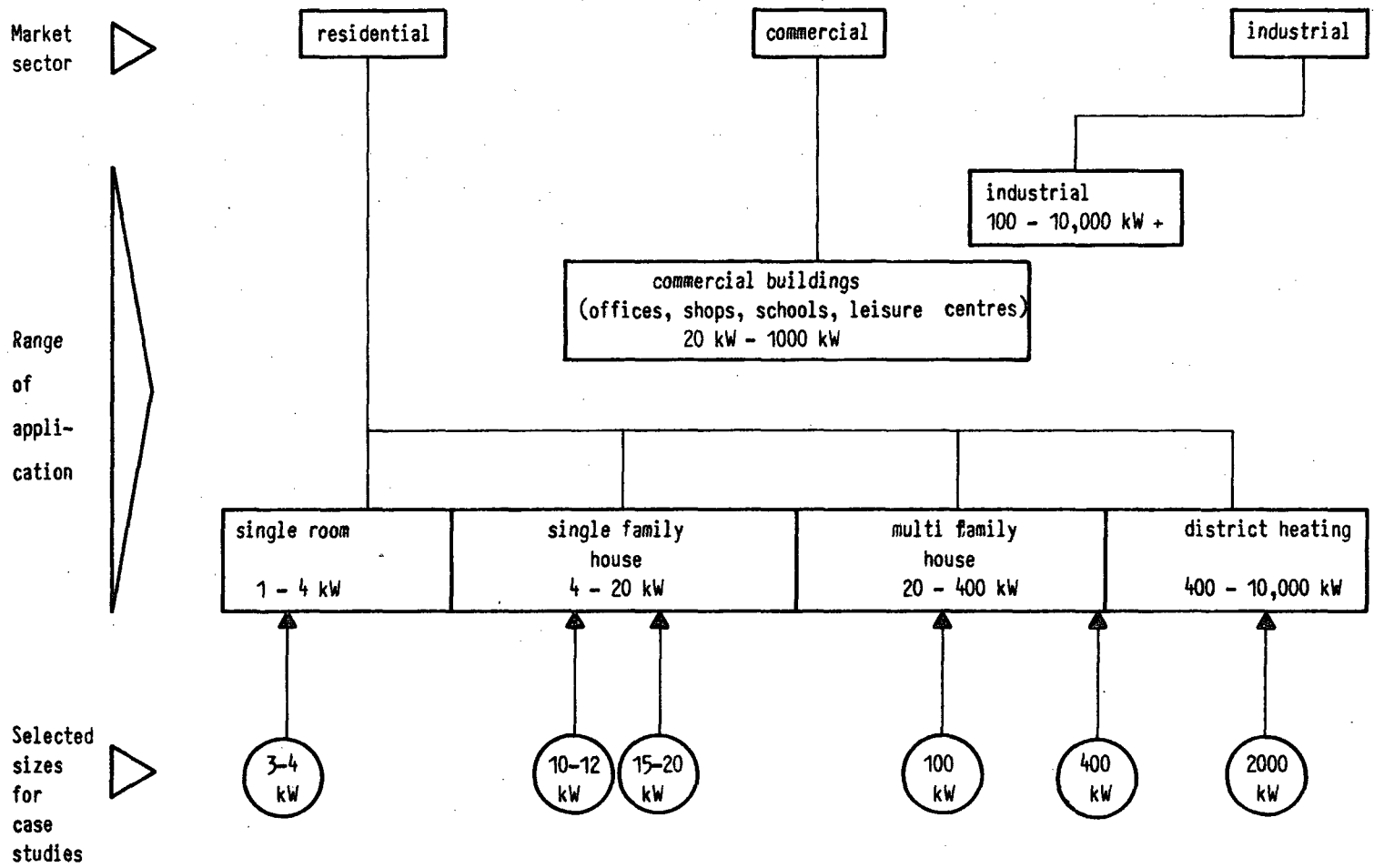

Fig. 3-2: Classification of systems by application and size (thermal output)

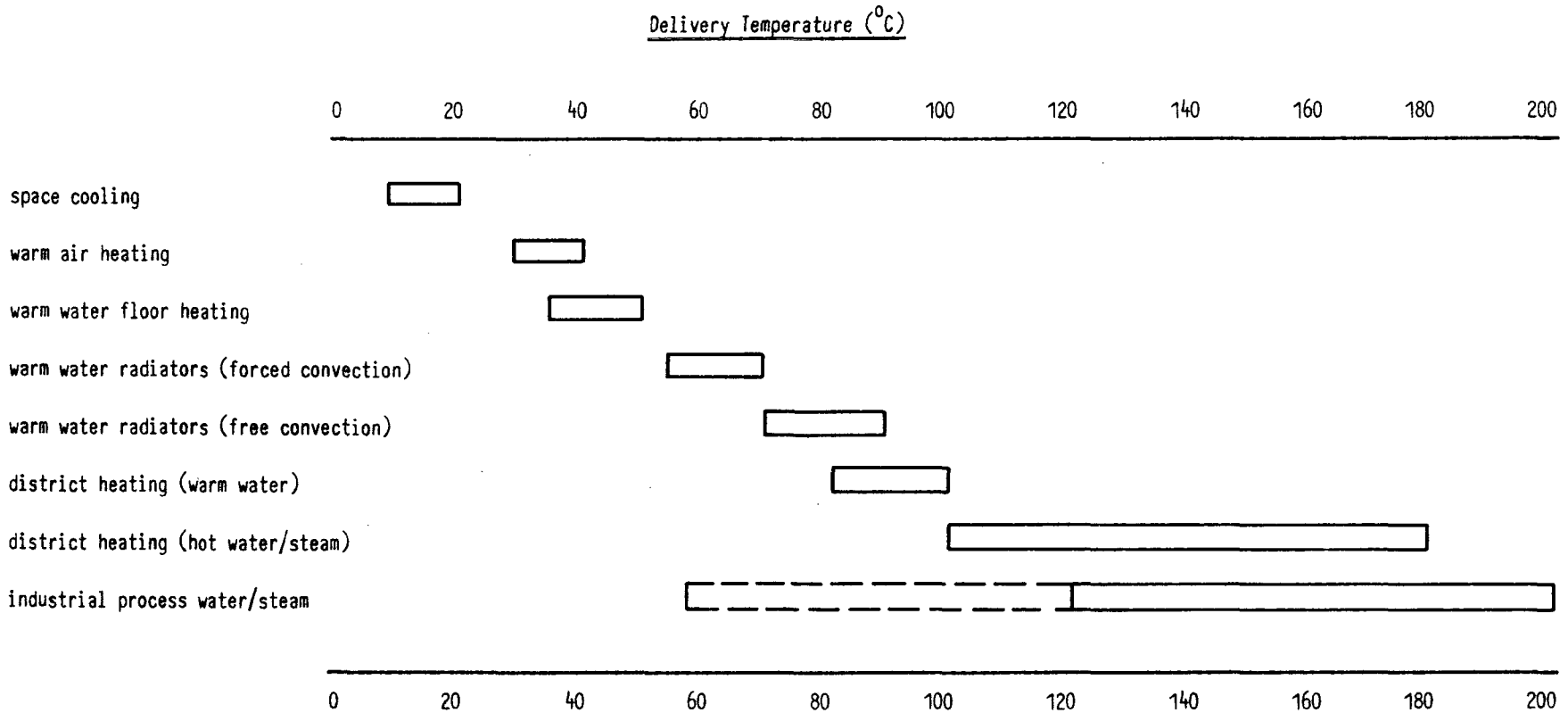

Fig. 3-3: Range of delivery temperatures required by application (design values)

3.4. System Descriptions

From Figure 3-1 it is clear that there are many possible types of system, depending on the combinations of drive energy and cycle, heat pump cycle and low grade heat source. However, certain system combinations are favoured because of the matching of drive and heat pump cycle characteristics. Table 3-1 shows the matrix of possible combinations of compression systems, with subdivisions by type of machinery used. The selection of heat pump and drive cycles is then influenced not only by the characteristics and theoretical performance of the thermodynamic cycles but also by the characteristics and performance of the types of machinery. In Table 3-1 are marked the combinations of cycles which are the subject of current R&D.

Figure 3-4 shows the principles of 13 of the most important advanced heat pump systems. For each system there is a line diagram showing the major components and fluid flows, a theoretical Ts diagram of the major processes, an energy flow (or Sankey) diagram and average values for gross coefficients of performance for a 50 K temperature difference between the heat pump cycle minimum and maximum temperatures. The detailed descriptions of the various systems have been well documented elsewhere, e.g. absorption and resorption /11, 12, 13, 14, 15/, Stirling-Rankine /15, 16, 17/, Brayton-Rankine /15, 17, 18/, Ericsson-Ericsson /19/, Rankine-Rankine /15, 19, 20/, Otto-Rankine /21/, Diesel-Rankine /22/, Heat Transformer /23/, Ejector /24/.

3.5. Definitions of Terms and Performance Criteria

The major performance criteria for each system are the Coefficient of Performance (COP) and Seasonal Performance Factor (SPF). There are many possible definitions of these, depending on what the system boundaries are considered to be. Thus there is the performance of the heat pump subsystem, that including the drive subsystem, and that of the system including the electricity and fuel produ-

Subsystem			Drive							
	cycle		Rankine				Stirling		Brayton	Ericsson
		machinery	recip. piston	free piston	rotary	turbo	kinematic	free piston	turbo	free piston
Heat pump	Rankine	recip piston					*		*	
		free piston		*						
		rotary			*		*		*	
		turbo				*	*		*	
	Stirling	kinematic								
		free piston						*		
	Joule	turbo							*	
		rotary								
	Ericsson	free piston								*

Table 3-1: Matrix of combinations of external combustion drive and heat pump machinery

a) single stage absorption

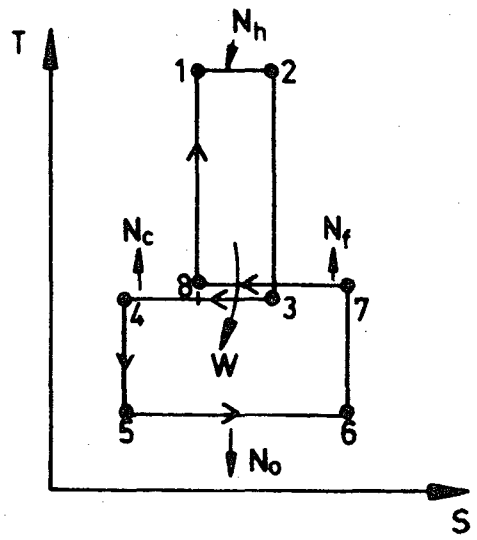

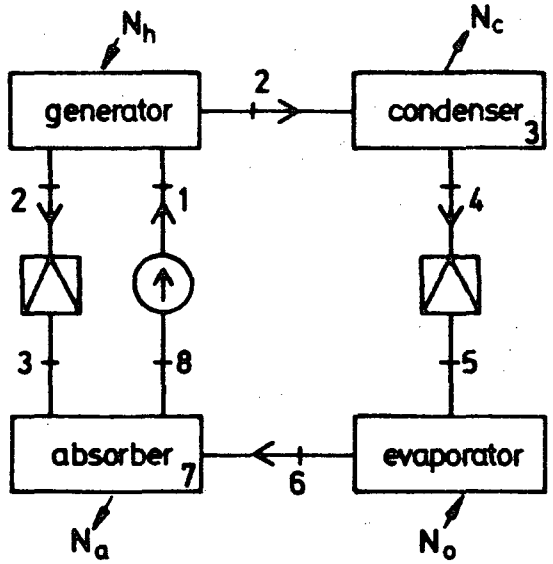

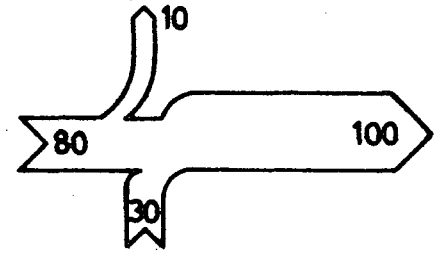

$$COP_{eff} = \frac{N_c + N_a}{N_h} \simeq 1{\cdot}2 - 1{\cdot}4$$

b) two-stage absorption (double evap.+absorbtion)

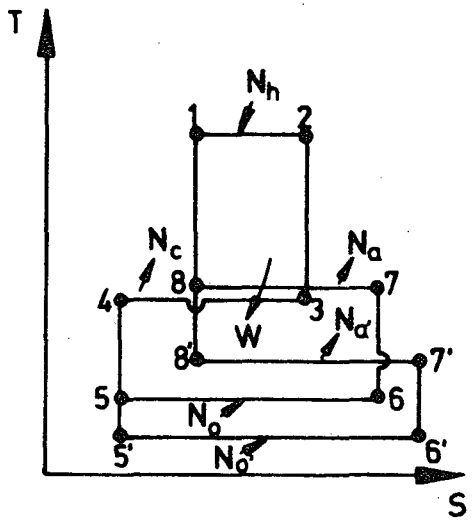

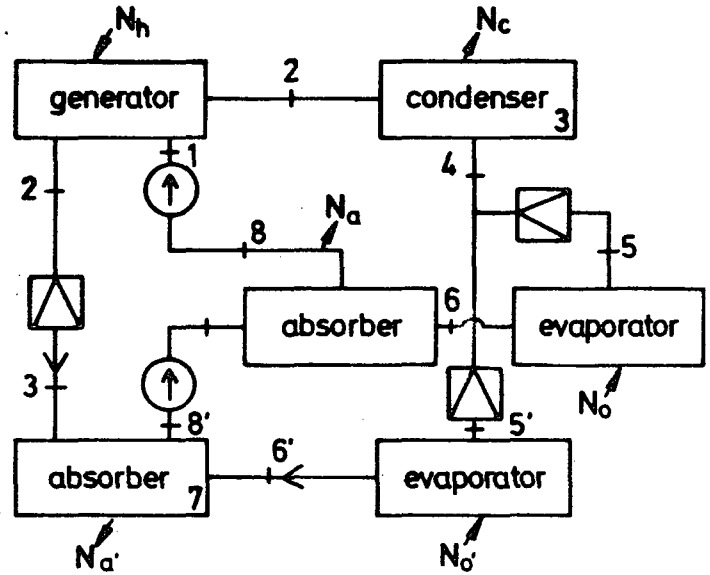

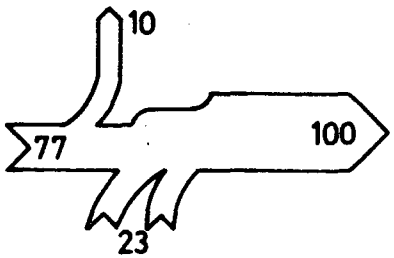

$$COP_{eff} = \frac{N_c + N_a + N_{a'}}{N_h} \simeq 1{\cdot}3 - 1{\cdot}5$$

Fig. 3-4 : System descriptions

c) resorption (thermal driven)

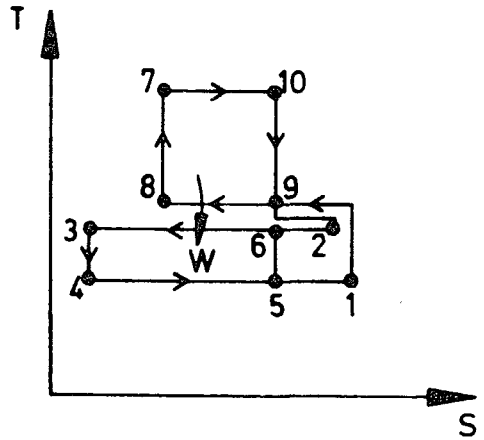

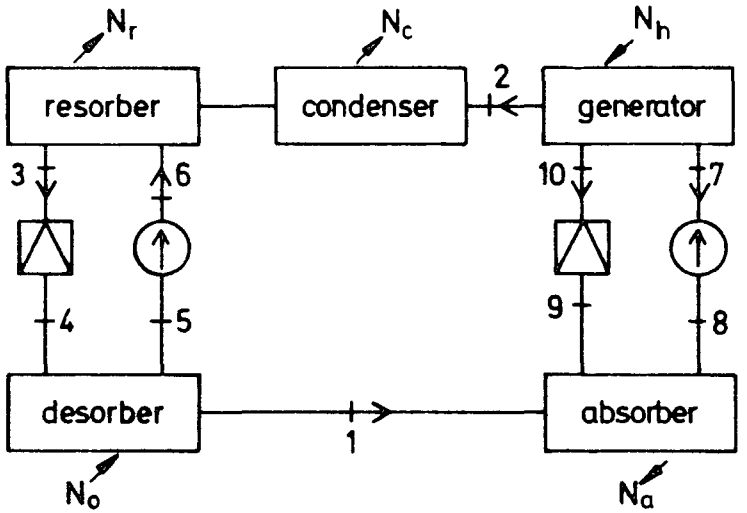

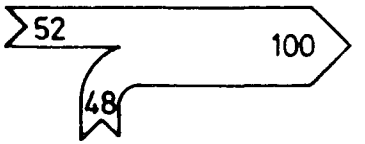

$$COP_{eff} = \frac{N_r + N_a + N_c}{N_h} \leq 2$$

d) resorption (mechanical driven)

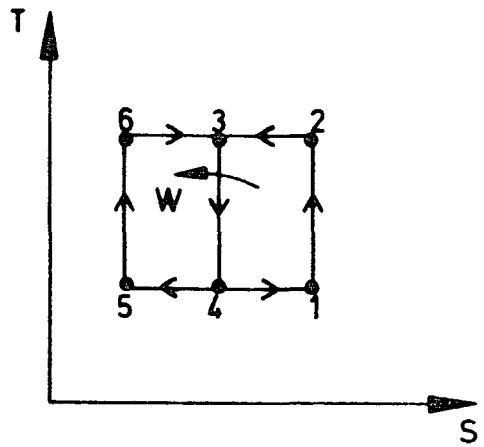

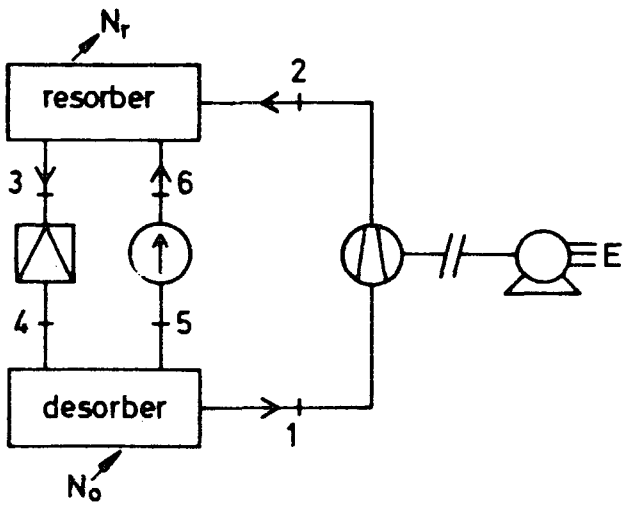

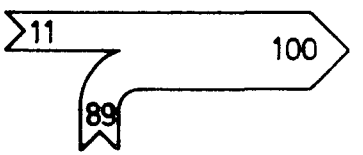

$$COP_{eff} = \frac{N_r}{W} \geq 4 \; (\geq 1 \cdot 2)$$

Fig. 3-4

e) Stirling - Rankine

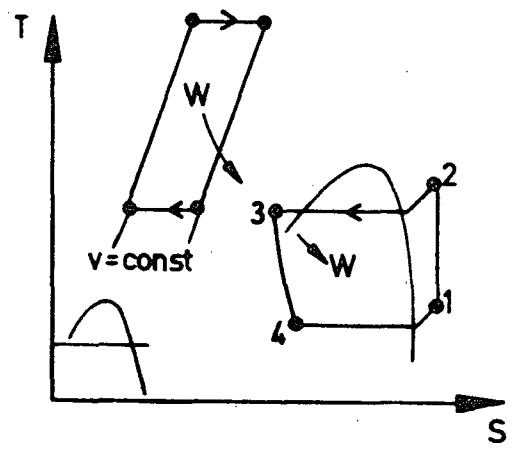

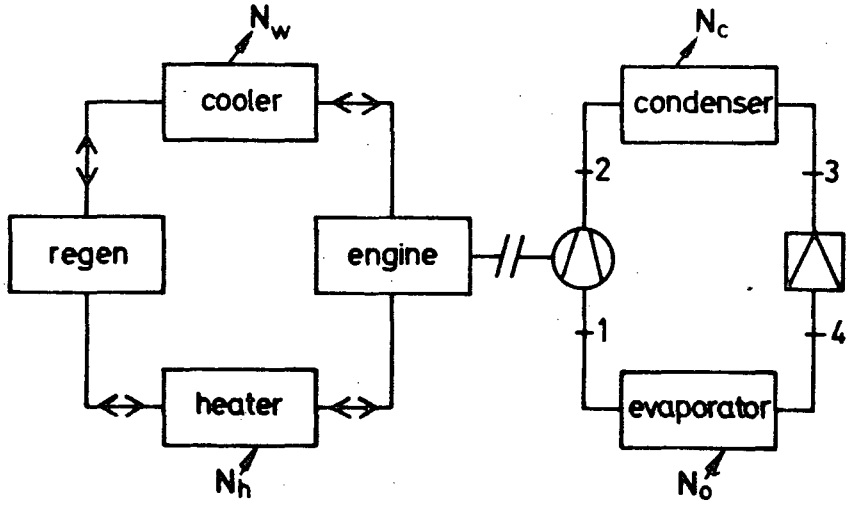

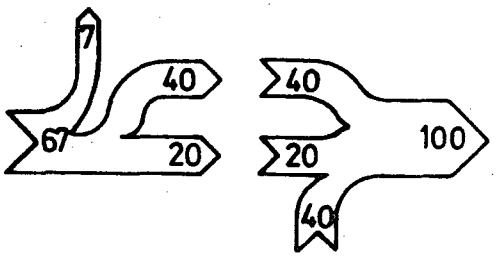

$$COP_{eff} = \frac{N_c + N_w}{N_h} \simeq 1{\cdot}4 - 1{\cdot}6$$

f) Brayton - Rankine

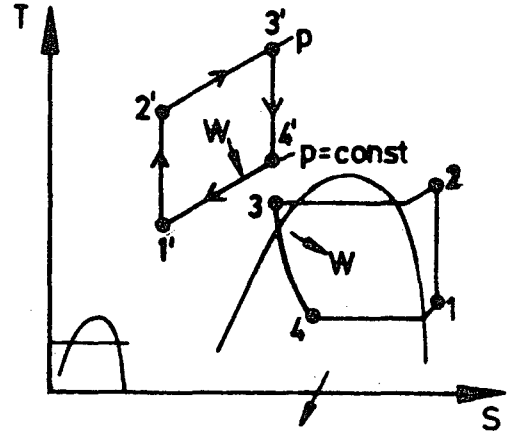

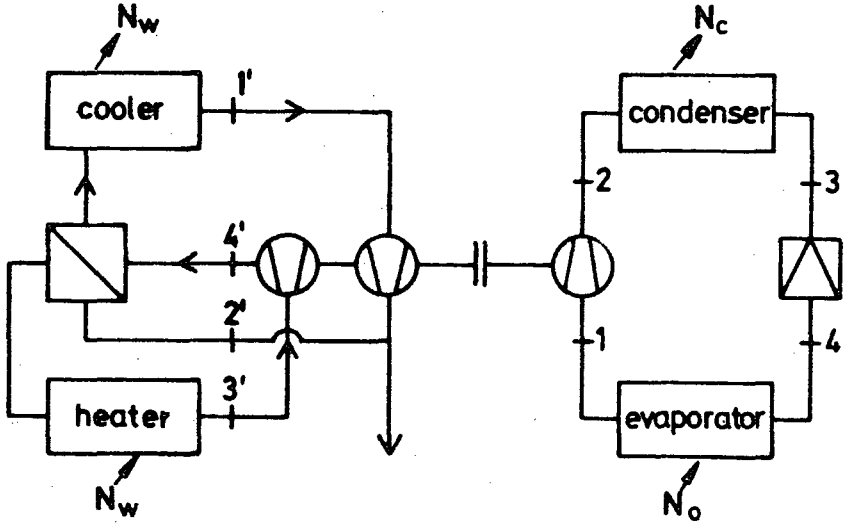

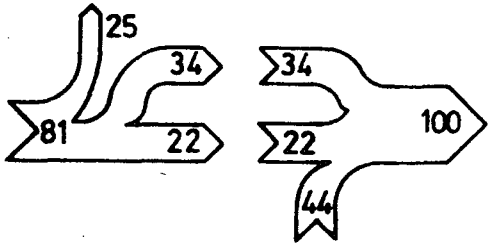

$$COP_{eff} = \frac{N_c + N_w}{N_h} \simeq 1{\cdot}2 - 1{\cdot}3$$

Fig. 3-4

g) Ericsson - Ericsson

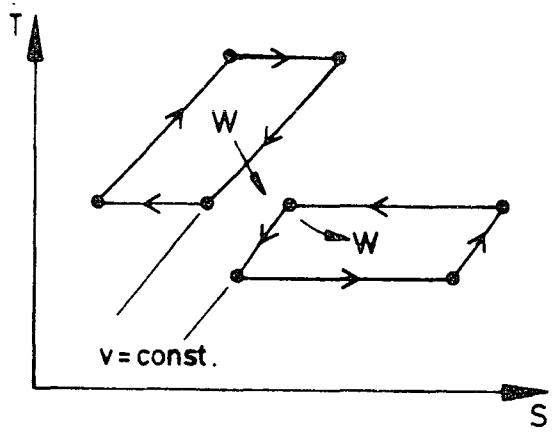

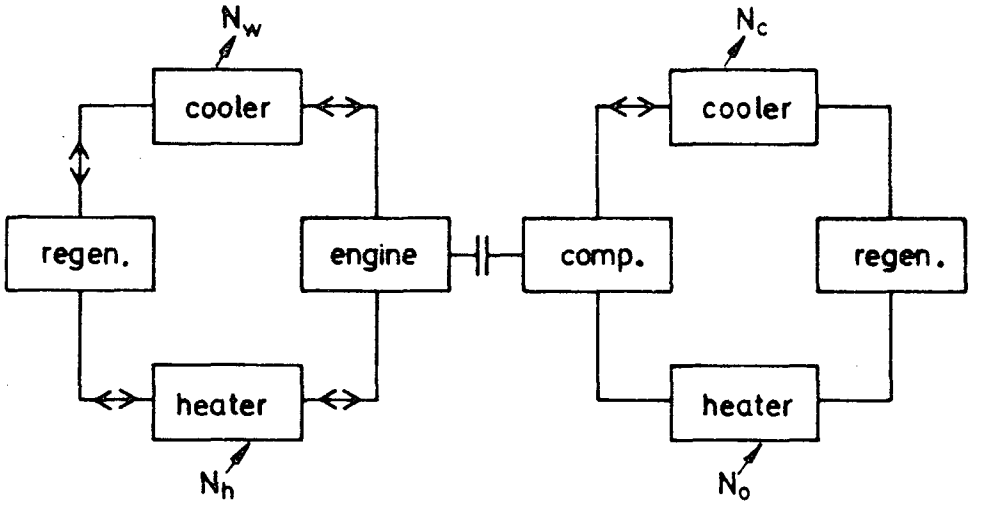

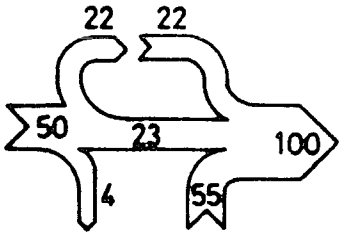

$$COP_{eff} = \frac{N_c + N_w}{N_h} \geq 2$$

h) Rankine - Rankine (single fluid)

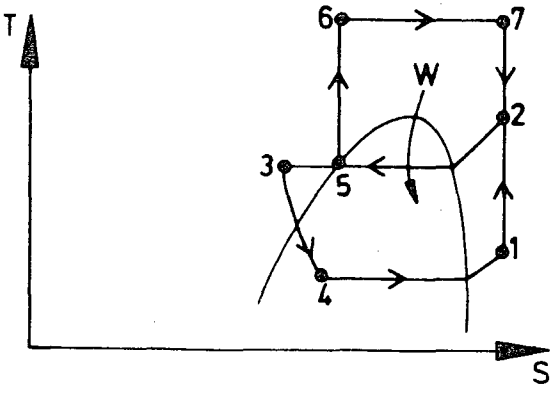

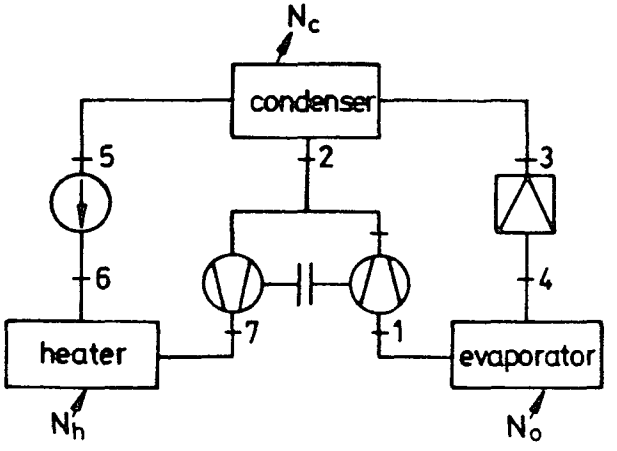

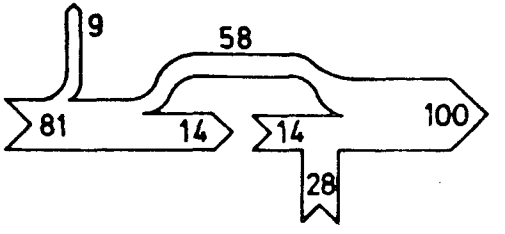

$$COP_{eff} = \frac{N_c}{N_h} \simeq 1{\cdot}2 - 1{\cdot}4$$

Fig. 3-4

i) Otto - Rankine

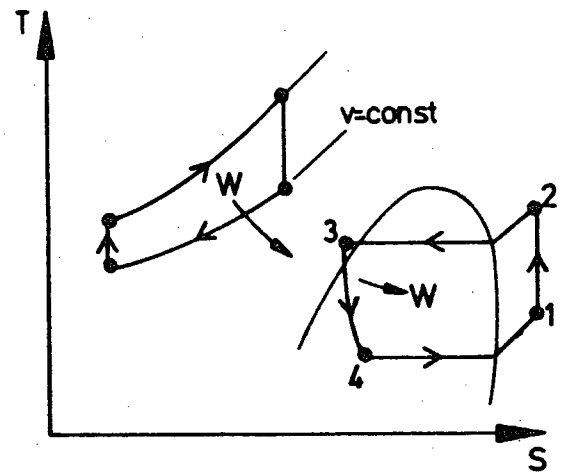

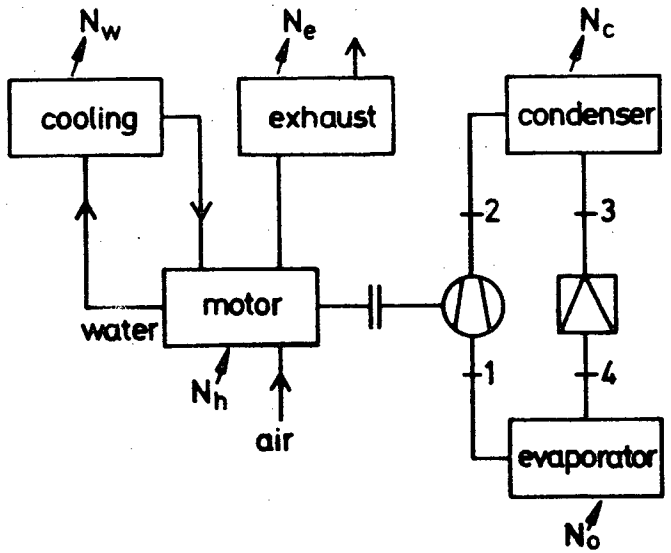

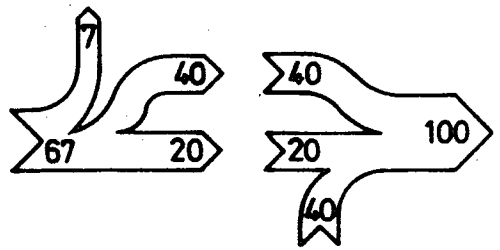

$$COP_{eff} = \frac{N_c + N_w + N_e}{N_h} \simeq 1{\cdot}4 - 1{\cdot}6$$

j) Diesel - Rankine

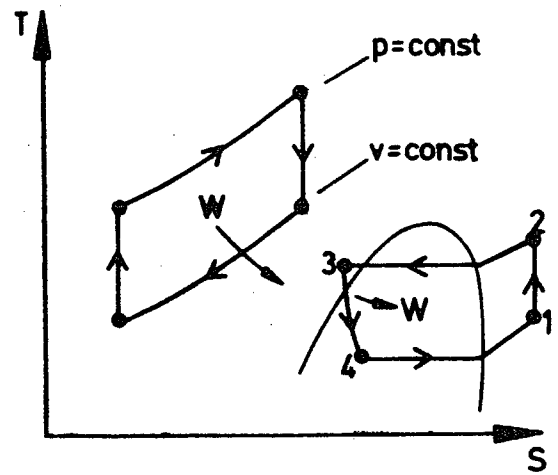

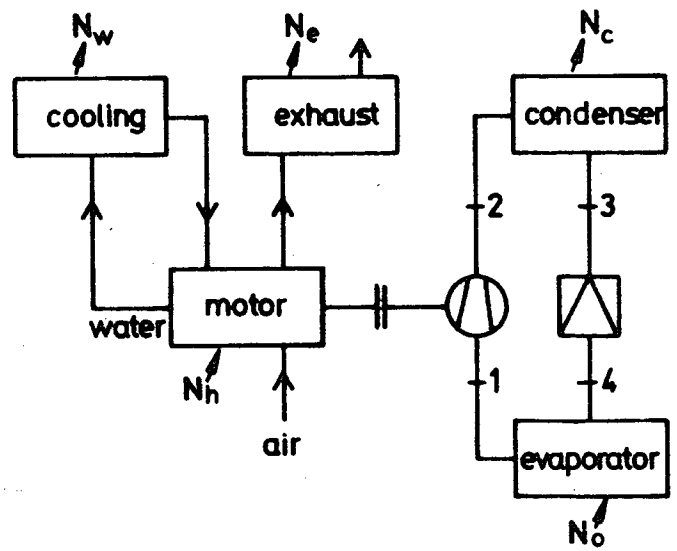

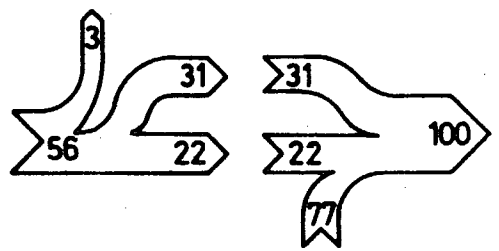

$$COP_{eff} = \frac{N_c + N_w + N_e}{N_h} \simeq 1{\cdot}7 - 2{\cdot}0$$

Fig. 3-4

k) electric motor-Rankine (thermally generated electricity)

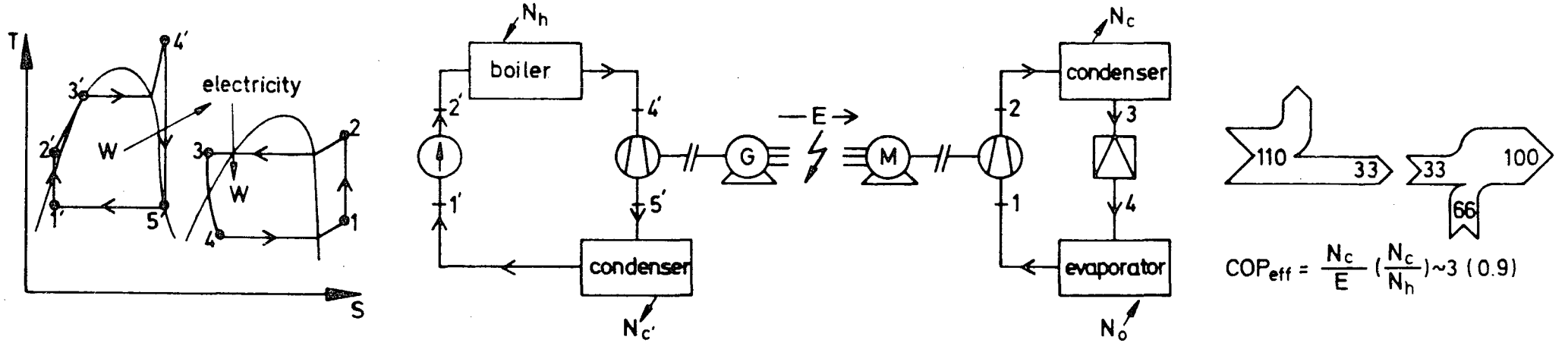

l) heat transformer (Rankine-Rankine)

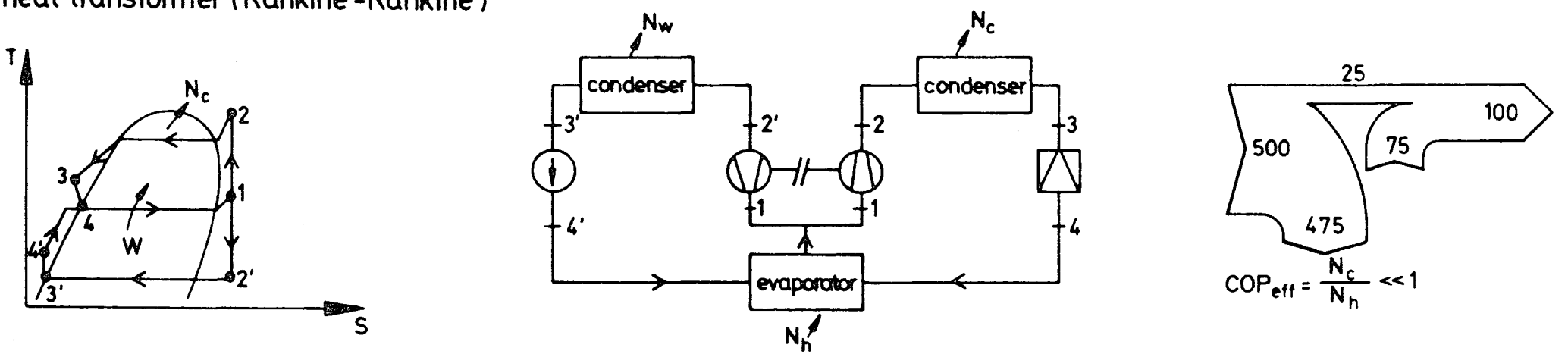

Fig. 3-4

m) ejector heat pump

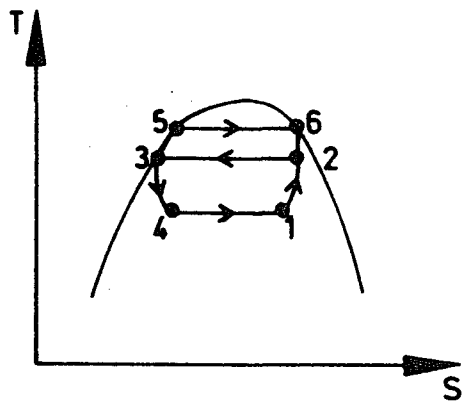

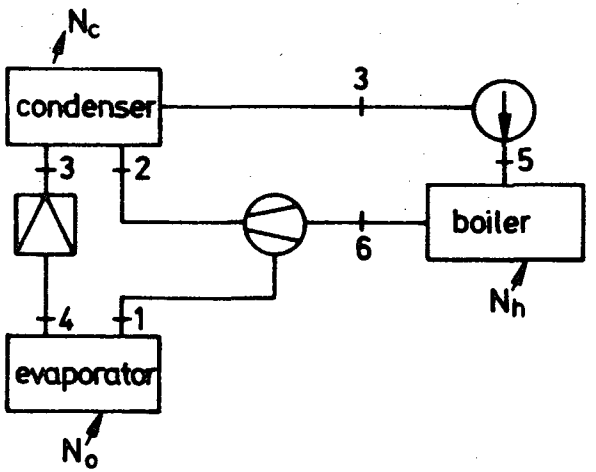

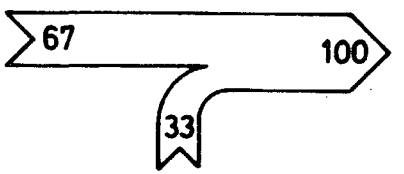

$$COP_{eff} = \frac{N_c}{N_w} \simeq 1{\cdot}5$$

Fig. 3-4

cing subsystems. The latter definitions are at present only significant when the energy conservation potential is assessed for electrically driven systems or those with a substantial auxiliary electric power requirement in countries with thermally generated electricity. However, future conditions with synthetic natural gas (SNG) as a possible competitor to coal or nuclear based electricity makes the definition of the system including energy production more relevant.

No internationally agreed definitions of COP and SPF exist and there are only two national standards which are relevant /25, 26/. Since these do not agree, simplified definitions of COP and SPF have been used, which are based on definitions suggested by Professor Gilli, a member of the Austrian National Team.

The following definitions of the Coefficient of Performance (COP) and Seasonal Performance Factor (SPF) were used.

For the heat pump subsystem only:

$$COP_g = N_g/N_m$$

where
N_g is the rate of heat output from the condenser (kW)
N_m is the electrical or mechanical power or rate of heat input to the heat pump, including auxiliaries (kW).

For the heat pump system (including drive subsystem):

$$COP_{eff} = N_{ht}/N_p$$

$$SPF_{eff} = Q_{ht}/Q_p$$

where
N_{ht} is the total rate of heat output (kW);

Q_{ht} is the total heat output per season (kJ);
N_p is the sum of
N_{hp}, the power or heating rate to the heat pump and
N_{aux}, the power input to the auxiliaries (kW)
Q_p is the total energy input per season to drive subsystem and auxiliaries (kJ).

For the heat pump system, including electricity generating efficiency:

$$COP'_{eff} = {}^{N_{ht}}/N_{p'}$$

$$SPF'_{eff} = {}^{Q_{ht}}/Q_{p'}$$

where

$$N_{p'} = N_{ht} + (N_{aux}/\eta_{el})$$

$$Q_{p'} = Q_{ht} + (Q_{aux}/\eta_{el})$$

η_{el} is the efficiency of production of electricity when thermally generated, and this efficiency is difficult to define accurately.

4. Research and Development Trends

4.1. Background

The identification of the current trends in the research and development of advanced heat pump systems has been based on the information collected with the assistance of the national teams, and also from literature surveys, contacts and discussions with manufacturers, researchers and experts in the various systems and related technology.

The derivation of R&D trends followed the matrix presented in the Technical Background Document of this Annex I and presented in an expandend form in Figures 3-1 to 3-5 in Section 3 'Technical Delimitation'. Figure 3-1 shows the possible combinations of heat pump cycles and drive methods. The latter are broken down by the method of production of the work (or its heat equivalent, commonly called exergy) which has to be expended to convert energy (low grade heat) to exergy (high grade heat) in a heat pump. The linking of drive cycle and heat pump cycle forms the complete heat pump system. The commonest system is given by the electric motor driven Rankine cycle, while the various sorption cycles can be considered as combined heat pump and drive cycles /27/. Not all combinations of drive and heat pump cycles are possible, since some heat pump cycles require a heat input (compression types) and others both (e.g. absorption and absorption-compression), or electricity (electrodynamic). Figure 3-2 shows the classification of heat pumps by application and size, i.e. thermal output, while Figure 3-3 shows the required distribution temperatures for each application. Further complication is added by the choice of heat source and the non-technical factors such as climate, availability of fuels, etc.

The trends are best considered under the classifications of heat pump, i.e. sorption, compression and electrodynamic, with the drive as a subclassification.

4.2. Sorption Systems

The R&D trends concerning sorption systems have been in two major areas, firstly fossil fuelled liquid/vapour systems (absorption, resorption etc.) for space and water heating and secondly the solar energy driven systems to provide heating, cooling refrigeration and airconditioning, using all sorption techniques. The R&D trends in both areas have been towards the utilisation of classical sorption cycles and working pairs, such as NH_3/H_2O for fossil fuelled space heating, but also towards the identification and use of new, or previously little utilised, working pairs and cycles. This is particularly true in the development of small space heating systems, for example for single family houses, and for solar powered systems. Figure 4-1 illustrates the R&D trends in sorption systems. The selection of system type and working pair is primarily governed by the temperature levels required for the absorber, evaporator, condenser and generator. The latter is determined by the available source of high level heat, whether solar, waste heat or fossil fuel, while the evaporating and condensing temperatures are fixed by the source and sink temperatures, which are functions of the application.

Figure 4-1 also shows the range of working pairs under investigation or being utilised in systems under development. The two 'classical' working pairs NH_3/H_2O and H_2O/LiBr are still strongly favoured in many countries for most applications, and most system development is based on one or other of them. The search for new working pairs is only a result of the well known weaknesses of both pairs, which limit them to particular applications. It is quite clear that it is extremely unlikely that a new working pair will be found which will be applicable, with better performance, over the complete range of conditions covered by refrigeration, cooling and heating.

The R&D trends in sorption systems are best analysed under the broad headings of the energy source used for generator heating,

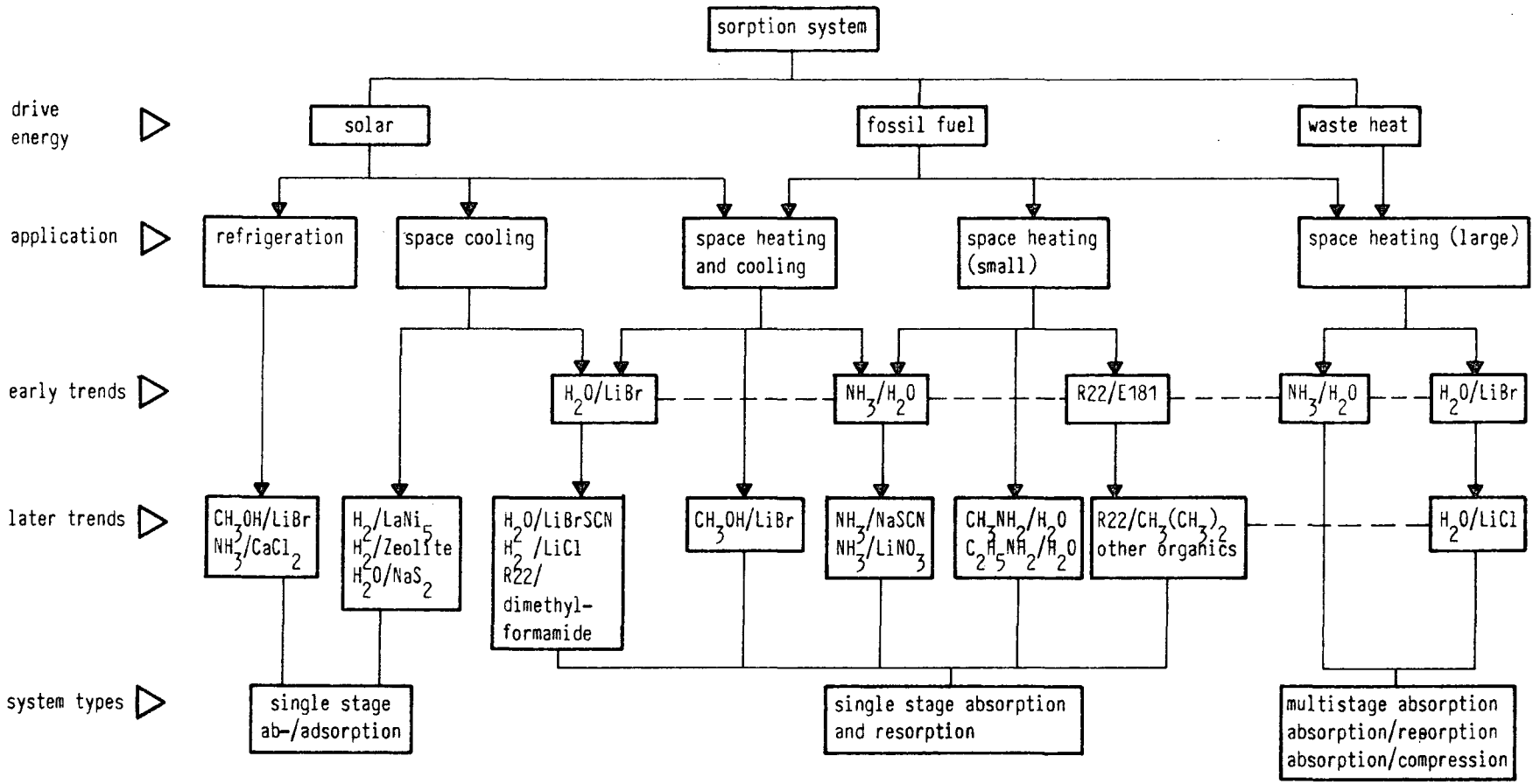

Fig. 4-1: R+D trends in sorption systems

with further discussion based on the application and working pairs.

4.2.1. Solar Driven Systems

The major factor in solar driven systems is the low level of temperature available for heating the generator of the system. With flat plate and non-focussed collectors the generator feed temperature will in general be less than 100°C and the system would have an average generator operating temperature of 80 - 90°C. The low generator temperature requirement has focussed attention on the H_2O/LiBr single stage absorption system except where the evaporating temperature is likely to be lower than 0°C. Thus for solar powered space coolers, air-conditioning, and combined heating and cooling H_2O/LiBr shows superior performance than the alternative absorption cycle working pairs, and systems are under development in many countries /28, 29, 30, 31, 32, 33/.

Work is also known to be taking place, though no references have been found in the literature, in the Institute for Environmental Research, Graz, Austria; Ohio State University, USA; Arizona State University, USA; University of Maryland, USA. Single stage absorption systems are also being developed using variations of the H_2O/LiBr system, such as with open generator /34, 35/, or adding other salts, such as LiSCN to increase performance, to broaden the region of operation without crystallisation and to allow air cooled condenser and absorber operation. Other developments are based on the use of methanol (CH_3OH) as working fluid instead of water /36/ or lithium chloride (LiCl) as solvent /37/.

For solar refrigeration, with evaporating temperatures in the range $<0°C$, the trend is towards systems using NH_3/H_2O /38, 39/ (and also at the Lawrence Berkeley Laboratory, University of California, University of Florida, Illinois Institute of Technology, India Institute of Technology, Madras, Eidgenössische Technische Hochschule, Zürich), methanol/LiBr /40/ or NH_3 with solid adsorbants such as $CaCl_2$ /41/.

Recent additions to the group of solar driven systems are those based on the adsorption of a vapour or gas by a solid. The favoured refrigerants are hydrogen with metal hydrides such as lanthanum pentanickel ($LaNi_5$) alloy as sorbant /42, 43/, water with zeolites /44/ or sodium sulphite /45/ or potassium thiocynate (KCNS) /46/ as sorbant. All these systems and some of the NH_3/H_2O systems /38/, are periodic in operation, i.e. they require flow reversal rather than continuous indirectional flow.

4.2.2. Fossil Fuel Driven Systems

The main group of systems, which are of interest in Northern Europe and the USA, are those which are suitable for both space heating and cooling or for space heating only, using fossil fuel to heat the generator. The two classical working pairs NH_3/H_2O and H_2O/LiBr have been the focus of development for this purpose although their disadvantages (toxicity of NH_3, freezing and crystallisation with H_2O/LiBr) have resulted in efforts to find alternatives.

NH_3/H_2O systems are currently being developed for the single family house application for space and water heating using single stage absorption /47/ (and also at British Gas Corporation, London) or by resorption /48/. However, the toxicity of NH_3 makes it unattractive for this application (indeed it is prohibited in Japan for this purpose) and since space heating under European and US conditions with air as heat source requires evaporating temperatures in the range +10 to -10, and perhaps to -20°C the H_2O/LiBr system cannot be used. Thus, it is for this area of application that a major trend has developed to find and use alternative working pairs. One such pair, R22/E181, has been chosen for a system currently under development /49, 50/.

Many studies are underway to find better working pairs /51, 52, 53, 54, 55, 56/ (and Columbia Gas System, USA) particularly for this application for solar cooling or for vehicle cooling /57, 58/ (which has similar operating conditions). Several approaches are

being attempted:

a) improvement of the performance of H_2O/LiBr systems by reducing the temperature at which crystallisation occurs through the addition of other salts /51/;

b) using NH_3 as refrigerant, but with alternatives to H_2O as absorbant (such as NaSCN /51/, $LiNO_3$ /52/ or KSCN /46/) to avoid use of a rectifier;

c) using H_2O as refrigerant, but with alternatives to LiBr as absorbant (such as LiCl or other metal salts /59/) to avoid crystallisation problems;

d) replacement of NH_3 as refrigerant by other fluids such as CH_3NH_2 (methylamine) or $C_2H_5NH_2$ (ethylamine) with H_2O as absorbant, to reduce the problems due to toxicity and explosivity;

e) search for organic working pairs such as R22/E181 /51, 52, 53, 54, 55, 57, 58/ to avoid the safety and rectification problems of NH_3/H_2O and the crystallisation problems of H_2O/LiBr.

So far little has been published to show that a suitable working pair has been found, though the fact that Allied Chemical /60/ and Columbia Gas Systems are developing systems based on unnamed organic working pairs is hopeful.

4.2.3. Waste Heat Driven Systems

Waste heat driven systems are generally for industrial use, or use industrial waste heat for applications such as district heating. The waste heat sources can be used solely for heating the generator or for heating both the generator and as source for the evaporator. Under these circumstances the traditional working pairs NH_3/H_2O and H_2O/LiBr can be utilised to good effect, since large units can be multi-staged.

Where low pressure steam or low pressure water can be made available, e.g. from burning waste gas, or by heat recovery from flues or from iron and steel furnaces etc., the NH_3/H_2O system can be used to provide district heating. A two stage system (two stage evaporation and absorption) is currently under development, using gas from a coke oven to heat the generator and cooling water from the oven at 60 - 75°C for the evaporator. Hot water is provided from the condensers and absorbers at 80 to 100°C for district heating /61/. A single stage H_2O/LiBr unit is also under development for the same purpose and with similar temperature levels /40/, and also with a variant utilising a large quantity of medium temperature water (at about 60°C) to provide a smaller amount of heat at a higher temperature (80°C), and rejecting heat to the environment. A similar system to the latter, but based on NH_3/H_2O, called the 'Heat Transformer' has also been proposed /62/. These systems are, in effect, thermodynamically equivalent to heat engines rather than heat pumps since they operate with the condenser rejecting heat at a low temperature and the evaporator absorbing heat at high temperature. Nevertheless, the effect is to provide high grade heat from a low grade source using the same technology as absorption heat pumps and refrigeration systems. A further development has been in the use of absorption-resorption and two stage absorption systems, e.g. using NH_3/H_2O /63/, which are being evaluated for incorporation in chemical engineering processes such as the production of styrene and cyclohexane.

4.3. Compression Systems

The R&D trends in compression heat pump systems are summarised in Figure 4-2. The initial trends were in the development of the well established electric motor driven Rankine cycle heat pump (the names 'reversed Rankine' or 'Clausius-Rankine' cycle are often used to distinguish this refrigeration cycle using organic fluids and isenthalpic expansion from the steam power cycle commonly called by this name). Later came the development, particularly in Germany, Denmark and Holland, of internal combustion engine driven

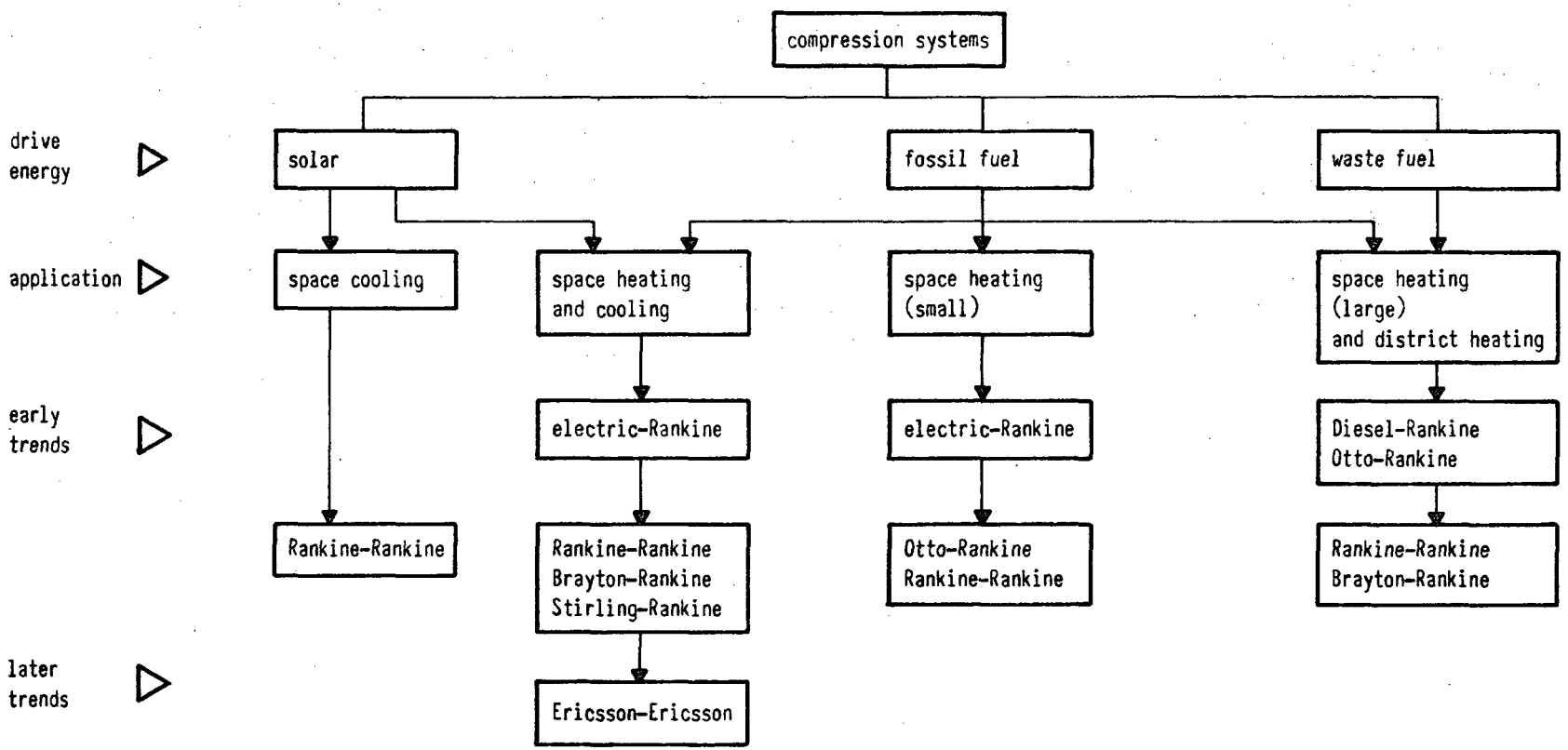

Fig. 4-2: R+D trends in Compression Systems

Rankine systems using Diesel and Otto engines, while in the US and several other countries R&D has concentrated on external combustion engine driven Rankine cycle systems. Drive cycles under development include organic Rankine, steam Rankine, Stirling and Brayton (or Joule). In the US a further development is in the combined Ericsson drive, Ericsson heat pump unit. The different trends can be attributed to the requirement in the US for summer cooling as well as winter heating and thus the preferred use of air as the distribution medium, the availability of solar radiation as drive energy in a large porportion of the US, and the spin off from aerospace technology. In Germany and other European countries the requirement was for heating only, using hot water as distribution medium for multi-family houses. The heat load for this application could easily be matched by that of available technology, such as industrial refrigeration compressors and engines.

The range of systems under development is given in Table 3-1, with classification by thermodynamic cycle for the drive and heat pump and also by the type of machinery used. The latter include reciprocating free piston (in which the work transfer is direct and not by a mechanical linkage), rotary (e.g. Wankel) engines and compressors (e.g. screw or rotary vane), and turbo (i.e. centrifugal) turbines and compressors. It is self-evident that not all combinations are possible or desirable, and that the most attractive systems are those which combine the possibility of good performance with simplicity. Thus the combinations listed in Table 3-1 are those that have been identified as meeting these requirements for particular applications and which are currently the foci of R&D. The initial criteria for performance are that the conversion of heat to work is highly efficient and that the remaining heat is rejected in a way that allows it to be easily recovered and combined with the heat output of the heat pump.

It is clear from Figure 4-2 that most systems are fossil fuel driven and so it is more appropriate that the R&D trends for compression systems be considered under the headings of drive and heat

pump cycle combinations rather than under the energy source for the drive system (as was used for sorption systems).

4.3.1. Electric Motor Driven Systems

The R&D trends in electric motor driven heat pumps have been dictated by the climate, housing pattern and available sources and fuels in each country.

The major developments in electric driven heat pumps have occured in the USA, where there has been a strong demand for air-conditioning in many parts of the country since the 1950's. Thus the initial developments were towards reversible air to air, and for larger applications air to water, systems capable of providing summer space cooling and a proportion of the winter space heating required. The trends in the 1970's were firstly to improve reliability, the lack of which has previously been a factor limiting sales of equipment. Studies of the modes of failure of existing equipment indicated major deficiencies in the compressor design, controls and associated electrical equipment /64/. As a consequence of this, improvements were made to compressor design (better motor design and insulation), suction accumulators and sump heaters were added to avoid compressor flooding during starting and reversing, simpler controls were provided (replacing expansions valves by capilliaries), improved manufacturing techniques were used to reduce the possibility of leaks and to improve system cleanliness, and better outside coil design and defrost control were developed to minimise frosting and defrosting losses.

Later an improved performance standard (ASHRAE STANDARD 90-75) was introduced /26/, which set higher standards for both heating and cooling performance. To achieve these standards manufacturers have introduced larger heat exchangers, speed modulated compressors and more efficient fans /65, 66/.

The requirements of the ASHRAE standard 90-75 are given in Table

4-1, from which it can be seen that the heating COP of new air to air systems (after 1 January 1980) is required to be greater than 2.5 at source temperature +8.3°C and 1.5 at source temperature -8.3°C. Although the existence of standards has no doubt led to an improvement in designs, it is nevertheless true that these performance standards are still insufficient to make electrical heat pump systems justifiable solely on the basis of energy conservation. On the other hand their use results in the substitution of other fuels for oil. Subsequent developments in the USA have been towards the production of systems for use in northern climates, where cooling is unnecessary and external winter conditions are more severe. Such systems use either air or ground water as source and have electric restistance heaters, oil or gas fired furnaces as backup /66, 67/. In Germany the same trend, towards fossil fuel fired back-up systems, has also been strong /68/.

These 'bivalent systems', usually consisting of an electric air to water heat pump with oil or gas fired boiler back-up, have been extensively promoted by the electric utilities and heat pump manufacturers, as the use of a fossil fuelled back-up avoids the maximum demand period of the whole electricity system. However, the increased capital cost and complexity makes them unattractive to the user, while the gas utilities have tried to discourage the use of gas fired back ups because of the peak demand such systems make on their network /69/.

In countries with a high proportion of hydroelectricity direct electrical back-up systems are common, and with the high standards of thermal insulation which are obligatory in countries such as Sweden the heat pump can be incorporated into the ventilation system (which is often necessary to ensure controlled air changes). This results in a high system efficiency, since the evaporator can be placed in the warm exhaust air and the condenser in the cold fresh air inlet. Alternatively, air to water systems are used with direct electric heating incorporated in the flow system after the heat pump. One such system uses a so-called 'regenerative cycle' invol-

HVAC-SYSTEM Heating Equipment (Heat Pumps)

Minimum COP

Outdoor temperature °F / °C	Air source		Water source
	47 db/43 wb 8.3 db/6.1 wb	17 db/15 wb -8.3 db/-9.4 wb	60 15.6 entering
Beginning January 1, 1977	2.2	1.2	2.2
Beginning January 1, 1980	2.5	1.5	2.5

Performance at sea level

ASHRAE STANDARD 90-75

Table 4-1 : Requirements of ASHRAE Standard 90-75

ving bypassing the expansion devices for about 15 % of the operating time, so increasing the system capacity by about 30 % without increased power consumption /70/.

In Britain and Ireland the trend has been towards the development of small air to air systems suitable for single room /71/, and small (or well insulated) single family house heating /2, 72, 73/. The use of air as a heat distribution medium follows from the attempt to achieve low capital cost and high performance and also to gain from US experience, though this was a result of the required summer cooling (which is not necessary in the British Isles), and even though most central heating systems in Britain use water as a heat distribution medium.

Later, more general trends in the development of electric motor driven heat pump systems have been towards alternatives to ambient air as sources /7/. One such trend has been towards the exploitation of the ground as heat source. Although previous work (e.g. by ERA in England in the 1950's) had not been successful, the reawakened interest in the ground as heat source /74, 75/ lies in its high heat capacity and low amplitude and frequncy of temperature oscillation, which makes it particularly attractive in countries such as Sweden and Canada which have winter minimum air temperatures of less than -20°C.

Current efforts are directed towards low cost optimised systems, using both horizontal pipes /76, 77/ and vertical pipes /75, 78, 79/. The latter would appear to offer considerable advantages over the former in regard to ground area requirements and installation cost. Another alternative source currently being extensively investigated is solar radiation, either using conventional solar panels /80, 81, 82, 83, 84) or specially developed solar roofs /85/. Other sources which are currently being examined for use with electric heat pumps are geothermal /86/, surface water /1/ and sea water /8/.

Another R&D trend has been towards better compressors, both from the efficiency and reliability aspects. Improvements to the designs of hermetic and semihermetic reciprocating compressors, which predominate in the size range < 50 kW (electrical power input), are being made which should yield benefits at little increase in cost.

These include better motor and compressor design /87/, use of speed control /88/ and recovery of the compressor waste heat by simple means /89/. Meanwhile advanced small rotary compressors are being developed by Fedders, Prestcold and others /90/ which have the advantages of small size, less complex construction, insensitivity to liquid flooding, and the potential for improved efficiency. For larger systems, the trend is towards screw and centrifugal compressors which have similar potential advantages to the rotary compressors and also the ability to operate at higher condensing temperature, suitable for district heating or industrial applications /91, 92/. A novel development is a free piston electrodynamic compressor /93/ driven by a linear motor, which has the potential of being easily capacity controlled.

Finally, the use of nonazeotropic mixtures of working fluids has been shown to give increased performance /94, 95, 96/, though they require larger heat transfer surfaces than single fluid systems.

4.3.2. Internal Combustion Engine Driven Systems

Internal combustion (i.e. Otto and Diesel) engine driven heat pumps were first utilised during the last decade for swimming pool and leisure centre heating /97/, an application for which electric motor driven systems have also been used. Often combined heating and cooling is necessary in this application (e.g. in airconditioning or combined skating rink/swimming pool/sports hall complexes) making a heat pump system the natural choice. The advantages of using engine driven systems are that a substantially higher coefficient of performance can be achieved /97, 98, 99/ than with electric heat

pumps and higher output temperatures can be obtained while still using R12 or R22 as work fluids. These commercial heat pump installations have generally used medium to high speed (1,000 - 2,000 rpm), four stroke, gas (i.e. Otto) engines of the type used for standby generators, and other stationary purposes, and which have shaft powers in the range 150-750 kW /100/.

The R&D trends in internal combustion engine driven heat pumps are summarised in Figure 4-3.

The trends have been dictated by the availability of fuels and suitable engines. Though Diesel engines have generally higher efficiencies than Otto engines, the general preference has been for gas engine driven systems, because of the lower fuel cost, the lower dew point of the acidic components in the exhaust and sooting problems with Diesel exhaust. Most of the developments in the use of internal combustion engine driven heat pumps have occurred in West Germany, and there the majority of installations use gas engines, since a natural gas network serves the major population centres. The trend in Scandinavia is towards Diesel systems since natural gas is not at present available in Sweden or Denmark.

The availability of suitable engines is one of the most important factors in the R&D trends. Present systems utilise commercially available Diesel or Otto engines, previously developed for marine and industrial uses. The second stage of development utilised high speed Diesel engines of the type used for vehicle drives /101, 102/, with shaft powers in the range 100-250 kW. Later developments have been towards the use of large, medium speed, Diesel engines for district heating systems /103/, and adapted automotive Otto engines for systems requiring thermal outputs of about 100-200 kW ($\approx$ 50 kW shaft power) /21/. A particularly interesting development has been the use of Wankel engines for this purpose /104/.

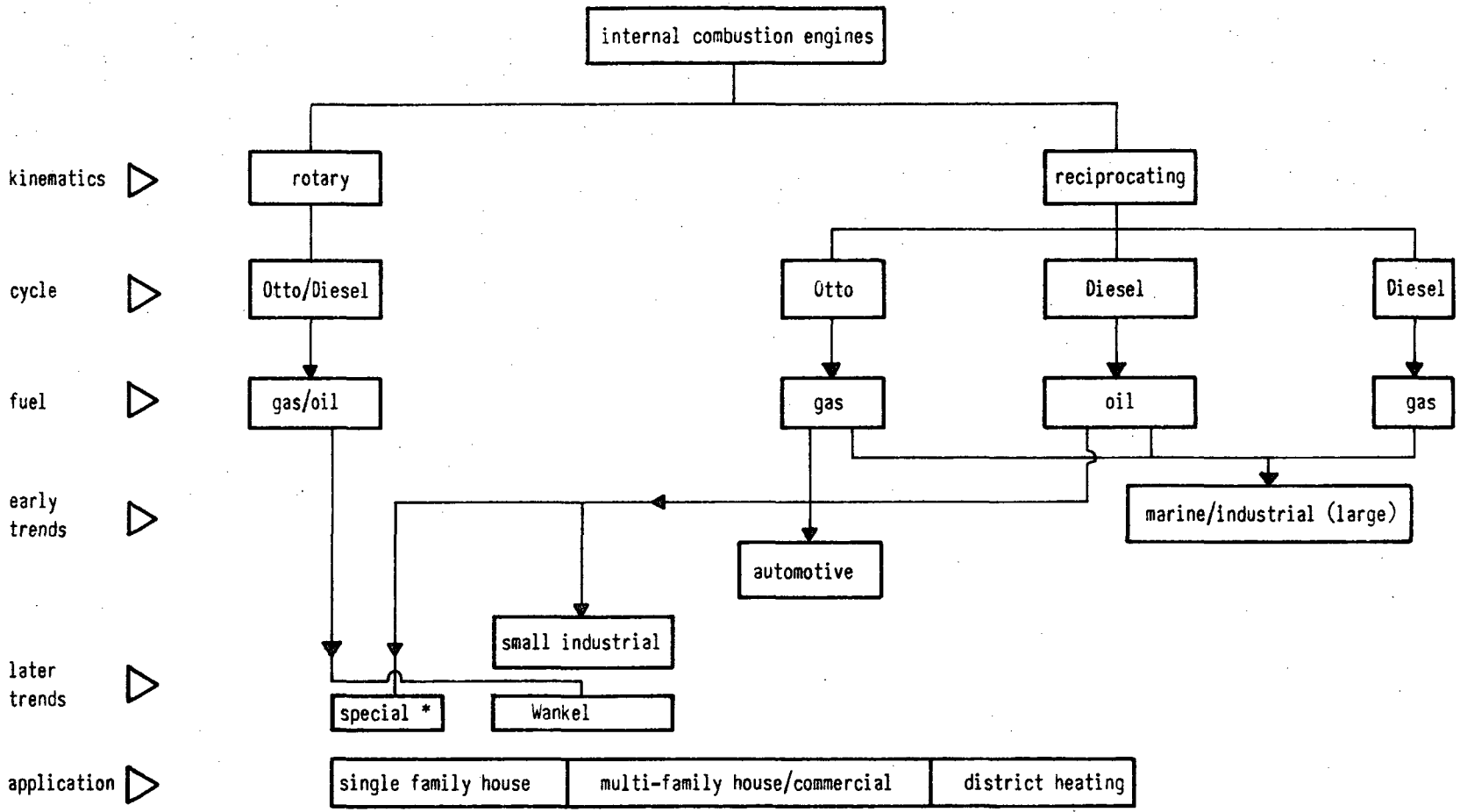

* combined.engine/compressor

Fig. 4-3: R+D trends in internal combustion engine driven systems

For small systems (thermal output in the range 10-100 kW) both Otto /105/ and Diesel /105, 106/ systems are under development in West Germany. However, current models are air cooled and consequently have lower performance than equivalent water cooled systems, in which the engine heat is added to the heat pump output.

Thus internal combustion engine driven heat pumps are available or are at the later stages of development for thermal outputs in the range 10 kW to 10 MW, i.e. almost the total range of interest. Current developments also include Otto engine driven higher temperature machines for industrial purposes /107/, the improvement of system design, for example by the use of corrosion resistant exhaust heat exchangers and novel silencing techniques, and the development of systems which utilise other sources of prime energy. The latter include a heat pump system utilising colliery gas for fuel and colliery cooling as the heat source for a district heating scheme and an Otto engine driven system using bio-gas produced from a wood gasifier for a small district heating scheme in Switzerland.

The major trends for internal combustion engine driven systems are therefore firstly towards large systems to capitalise on the higher efficiency obtainable from the use of large engines and waste heat sources, and secondly towards medium-sized systems, using low cost series produced automotive engines. The development of small systems (less than 100 kW output) has been hindered by the relatively high specific cost, lower efficiency of small engines, unavailability of water cooled engines and anticipated problems with lifetime and service. Current R&D trends are towards overcoming these problems.

4.3.3. External Combustion Engine Driven Systems

At present no external combustion engine driven heat pumps are commercially available. Research and development has concentrated on two possible drive cycles, the Rankine and Stirling cycles, each of which shows particular advantages for this purpose. The Rankine

cycle has been selected as a possible drive cycle because systems can be developed with a combination of drive and heat pump cycles, to give a mechanically simple unit which is suitable for either fossil fuel or solar powering. The Stirling cycle on the other hand has been chosen by others because of its promise of high efficiency, low noise and reliability. Both systems, like the absorption systems, can be multifuel devices and produce low pollution levels.

4.3.3.1. Rankine-Rankine Systems

Rankine-Rankine systems are being developed using either one or two separate working fluids for the drive and heat pump cycles. The advantage of the latter is simplicity, having a single condenser for both cycles and no problem with sealing between the expander and the compressor. On the other hand, the use of a single work fluid results in an inability to optimise both the power and heat pump cycles, giving either an excessively low heat pump evaporator pressure or an excessively high feed heater pressure.

Figure 4-4 classifies the systems currently under development by whether they use a single or two work fluids, the type of machinery used for expander and compressor, and by the drive cycle fuel and application. The combination of drive cycle expander and heat pump compressor is generally dictated by the application and fuel, and thereafter the working fluids are selected to suit the machinery. It is clear that the combinations of machinery are dictated by the fact that the characteristics of one should match that of the other and so in most systems machinery of the same generic type (e.g. rotating or reciprocating) are used for both components. Thus for large systems turboexpanders and compressors have been selected, since these have high efficiencies and are compact. For large systems water /108/ or a low pressure organic fluid /109/ has been chosen for the drive cycle work fluid with a normal halogenated hydrocarbon refrigerant (such as R22 or R113) for the heat pump fluid. For small systems many developments are also based on

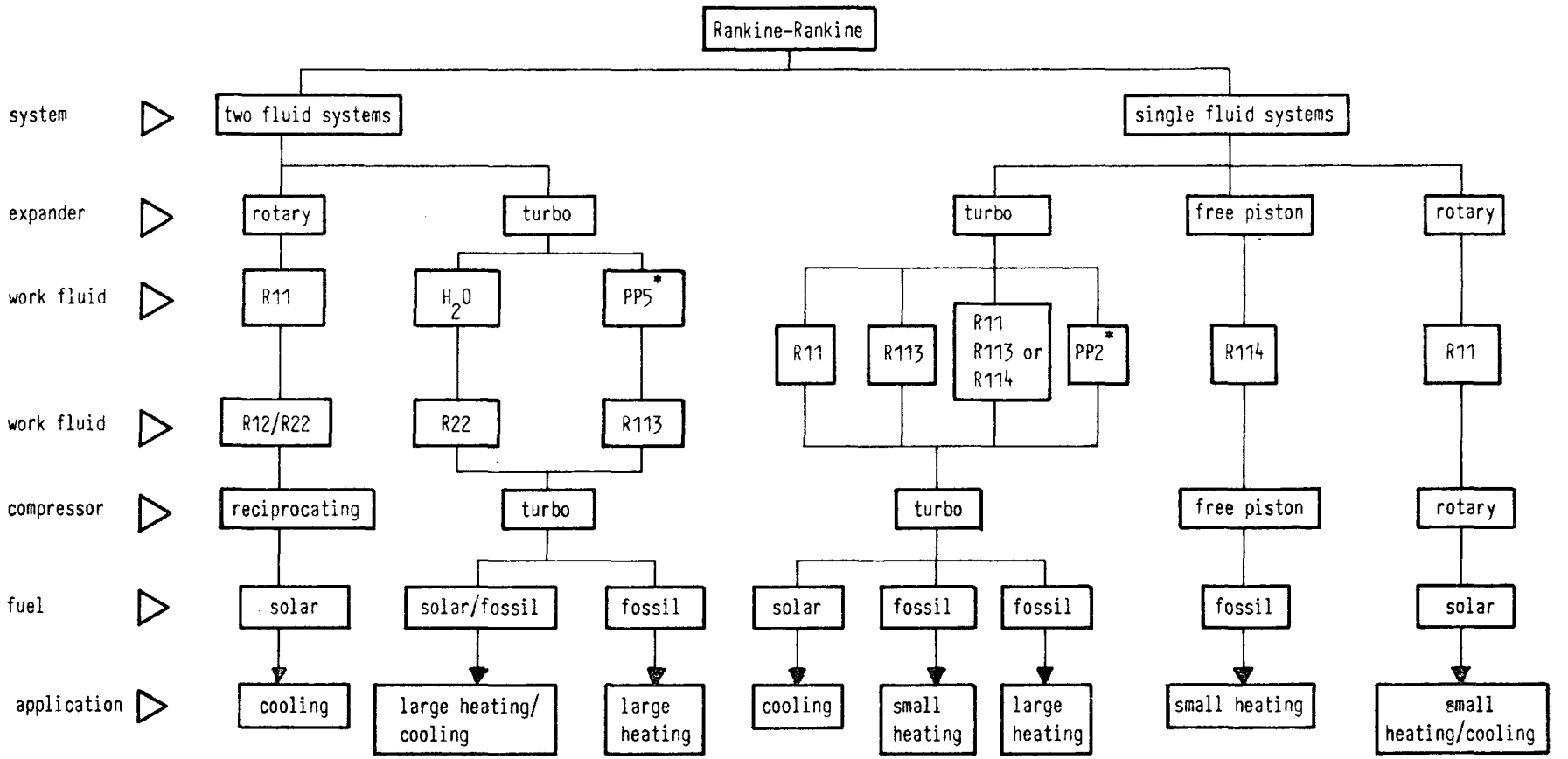

* PP2 and PP5 are Imperial smelting Corporation trade names for C_7F_{14} and $C_{10}F_{18}$

Fig. 4-4: R+D Trends in Rankine-Rankine systems

turbo machinery though these, for the sake of simplicity, use a single work fluid (such as R11, R113 or R114) /110, 111, 112, 20/. Alternative approaches for small systems are to use a combined free piston expander and compressor /113, 114/, or a combined rotary-vane expander-compressor /115/ with a single fluid (usually R11 or R114), a rotory expander with a normal reciprocating compressor with R11 as the power cycle fluid and either R12 or R22 as the heat pump fluid /116/.

Because of its superior performance R11 is favoured for solar powered single fluid applications, while R114 is favoured for fossil fuelled systems because of its higher thermal stability.

4.3.3.2. Stirling Cycle Systems

The development of Stirling engine driven systems is at a very early stage, whether these are driven by the socalled kinematic, i.e. mechanically driven, piston engines or by the more novel free piston systems. Figure 4-5 shows the R&D trends in Stirling-Rankine systems.

In the case of the kinematic engines the developments are generally based on earlier work in the Netherlands by Philips on Stirling engines, while the free piston systems are being developed in the USA.

Kinematic Stirling engines suitable for driving heat pump cycles are not commercially available and are generally at an early stage of development. Philips are still active in developing their engine /16/, while United Stirling in Sweden /117/ are at an advanced stage of development of a series of medium-sized engines for automotive use which could be used for this application. British Aerospace have patented a machine which could be used for both drive and heat pump cycles /118/, while MAN and MWM some time ago established a joint company to develop Stirling engines /119/. Research is also being conducted on the practical applica-

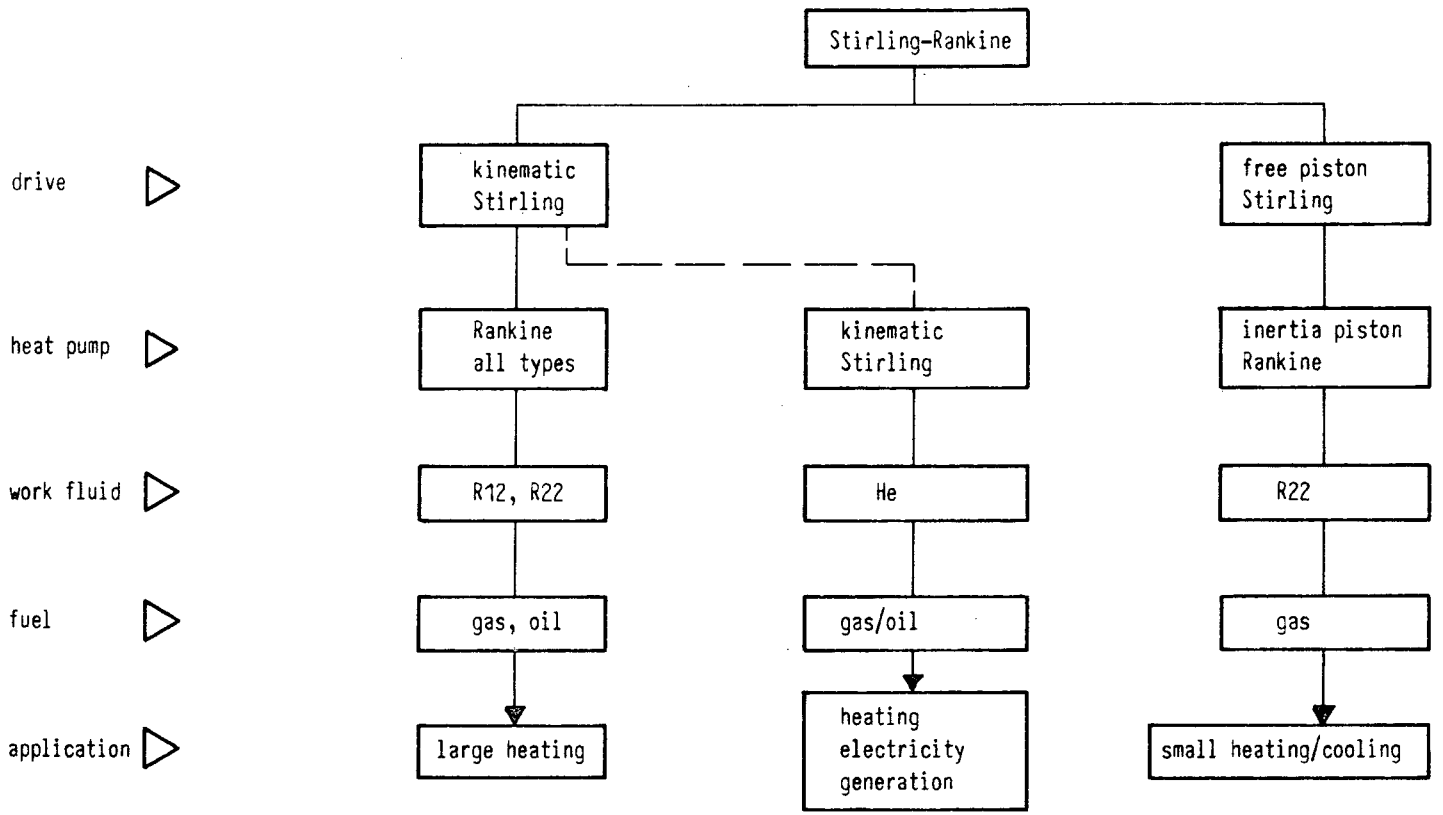

Fig. 4-5: R+D Trends in Stirling-Rankine systems

tions of kinematic Stirling engines to drive conventional Rankine cycle heat pumps /16/, and also at the Technical University of Denmark into a combined Stirling drive-Stirling heat pump unit to produce both heat and power.

Free piston Stirling engines are also being developed, and since these are unsuitable for providing a rotating drive for conventional heat pump compressors, special inertia piston compressors are being developed at the same time, with both the Stirling engine and Rankine compressor being in a single hermetic unit. A major development effort is by GEC in the USA, under the sponsorship of the Gas Research Institute and the U.S. Department of Energy /17, 56/, and also by ERG (also in the USA) /19/. Both systems are air to air units, for both cooling and heating are suitable for single family house use.

Another Stirling system under investigation is the liquid-piston heat pump /121/, which uses an oscillating liquid column within U-tubes to perform both the functions of drive and heat pump cycle. This has the advantages of simplicity since is has no mechanical moving parts.

4.3.3.3. Brayton/Joule Cycle Systems

A gas turbine on the Brayton cycle is being developed by AirResearch in the USA for use as the drive for heat pump systems /17, 18/. This development uses a sub-atmospheric pressure regenerative gas turbine with heat recovery to drive the turbo-compressor of an air to air Rankine cycle heat pump through a magnetic coupling. This system is intended for commercial building heating and cooling.

The air (or Joule) cycle has also been considered for use for the heat pump subsystem /122/, particularly for applications when hot

(and dry) air is required, such as industrial drying. The Joule cycle, though having a high theoretical efficiency, suffers from a high sensivity to irreversibilities and the properties of the work fluid and so efforts are aimed at improving its performance by injecting water /123/ or another condensible vapour /124, 125/ to reduce compression power.

4.3.3.4. Ericsson Cycle Systems

Benson /19/ selected the free piston Ericsson-Ericsson system as having the highest potential for heat pumping of all the possible free piston systems and this system is being developed by ERG. It is envisaged that such a machine could be either fossil fuelled or solar powered, and the possibility of achieving near optimum performance from both cycles, combined with its self-modulating characteristics and possible simultaneous provision of heating or cooling and electricity generation, are the motives for the development of this machine.

4.3.3.5. Other Compression Systems

Two other developments using compression of a gas or vapour as the principal technique in achieving the heat pump effect are the use of an ejector system /24/, or by a heat pipe /126/ (in which the compression and expansion processes occur, and through which heat from the source and heat to the sink are transferred). The former device is suitable for industrial applications where available high pressure steam can be used to drive the system, which is used to recover waste heat. The latter is suitable for the generation of cold using solar generated heat.

4.4. Other Heat Pump Systems

The thermoelectric heat pump, using the Peltier effect, continues to be developed for heat pump applications though the intractability of finding pairs of conductors which show a high Peltier effect (high conversion efficiency from electricity to heat and cold) with low thermal conductivity has resulted in no practical use for this technique in the thermal output range of interest. However, recent developments suggest that the effect combined with semiconductor photoelectric devices could be used for solar cooling applications /127/.

Another development has been in the use of the magnetocaloric effect first reported in 1918. Such a system, which is similar in principle to the Joule or Brayton cycle, has been built and tested in the USA /128/. Initial experiments show that the system operated, though inefficiently, and that the most likely applications would be at low temperature (<77 K).

4.5. National R&D Trends

Tables 4-2 and 4-3 summarise the national R&D trends related to heat pump systems and to their sources and sinks respectively. It is clear from Table 4-2 that in the USA, R&D has concentrated on those systems which can provide both heating and cooling or which can be solar powered, while in northern Europe emphasis has been on heating-only systems and those which can be fired by natural gas or oil. In southern Europe and Japan there is a similar trend to that in the USA, since in these countries there is also a requirement to replace electric reversible airconditioners by solar powered systems.

The overall R&D trends can be summarised as,

(i) the development of electric systems,
(ii) internal combustion engine driven systems,
(iii) external combustion and solar powered systems.

Drive Energy	E			G/O/S			G/O/S			S			G/O/W			G		G/O		G/O/S			G/O/S			G/O/S			G/O	G/O/E			G/O/S	E/G/O/S		
Drive Cycle	Electric Motor			-			-			-			-			Otto		Diesel		Rankine			Stirling			Stirling			Brayton	Brayton/Electric			Ericcson	other		
HP cycle	Rankine			1 Stage Absorption			1 St.Resorption			Adsorption			Multistage Sorption			Rankine		Rankine		Rankine			Rankine			Stirling			Rankine	Joule			Ericcson			
Applic	H	H/C	C	H	H/C	C	H	H/C	C	H	H/C	C	H	H/C	C	H	H/C	H	H/C	H	H/C	C	H	H/C	C	H	H/C	C	H/C	H	H/C	C	H/C	H	H/C	C
Austria	***					***																														
Belgium				***																	**															
Canada	***																																			
Denmark	***											***						***																*		
Germany	***			***		***	***				**		***			***		***					*													
Italy		***			***													***		***	**												*	*		
Japan		***				***								***				**			***															
Netherlands						**						**				***							***													
Spain																																				
Sweden	***			*						***								***					**													
Switzerland	**			***		**	**						**			***		**		*																
U.K.	***			***												***				***						*		*								
U.S.	***	***	***		***	***						**				*					***			***			*		***		***		***			**

Notes

E Electric
G Natural Gas
O Oil based fuels
S Solar
W Waste heat
H Heating only
H/C Heating and Cooling
C Cooling only

* Low level R+D: conceptual studies
** Medium level R+D: theoretical studies, computer modelling, laboratory scale experimental work
*** High level R+D: full scale prototype construction and testing; detailed theoretical, computer and laboratory work; application

Table 4-2: Summary of national R+D trends: heat pump systems

Country	Sources									Sinks	
	air	ground		solar	water					water	air
		ve	ho		gr	su	se	wa	ge		
Austria	+++	+++	+++	+++						+++	
Belgium			+++	+++						+++	
Canada	+++	+++	+++								
Denmark			+++					+++		+++	
Germany	+++	+++	+++	+++	+++	+++		+++		+++	+++
Italy	+++			+++			++			++	+++
Japan	+++			+++			++	+++	+++	+++	+++
Netherlands	+++			+++	+++					+++	
Spain	+			+							+
Sweden	+++	+++	+++	+	+	+	++	++	+	+++	
Switzerland	++		++	+++	++	++		+++	++	+++	
U.K.	+++		++							+++	+++
U.S.	+++			+++	+++				++	+++	+++

Notes
ve vertical; ho horizontal; gr ground water; su surface water; se sea water; wa waste water; ge geothermal water

\+ low level R+D : conceptual studies
++ medium level R+D : theoretical studies, computer modelling, laboratory scale experimental work
+++ high level R+D : full scale prototype construction and testing; detailed theoretical, computer and laboratory work; application

Table 4-3: Summary of National R+D Trends: Sources and Sinks

5. The Case Studies

5.1. Background

In order to establish a link between the technology survey and the market study it was necessary to provide technical and cost data on heat pump systems which were considered by the participants to have possible applications. Initially a list of interesting profiles was made which included such aspects as operating principles (i.e. absorption, engine driven, etc.), thermal output, heat source, distribution medium and fuel. The national teams identified which systems were under development or were of interest to their country, and a questionnaire was prepared to obtain all the necessary technical and cost data. The completed, or more often semi-completed questionnaires (since most systems were in early stages of development), were then used to produce the case studies. Where data was missing the system developers were visited to obtain it, and as a last resort the data was estimated. The case studies were then distributed to the national teams for use as input data to the market study, while the questionnaires were used as material to assist the technology study. The case studies are attached to this volume of the report as Appendix I.

Table 5-1 is a list of the case studies and their major characteristics. The majority of the case studies (8) were for systems being developed for single family house heating, i.e. with thermal outputs in the range 10-20 kW; these include two absorption systems, two external combustion engine driven systems, and two internal combustion engine driven systems, one electrically driven system, and one solid absorption system. Of the remainder, four were very large systems ($\geqslant$ 2 MW) for district heating, three being absorption and one Diesel engine driven. A large group (five) was for commercial building heating (and sometimes cooling) or multifamily house heating; three systems from this group were external combustion engine driven and two were internal combustion engine dri-

Heat pump profile No.	Heat pump cycle		Drive		Heat source	Thermal output kW	Case study?
	type	fluid(s)	type	fuel			
1	absorption	NH_3/H_2O	direct	oil, gas	ground	3-4	no
2	absorption	organic	direct	oil, gas	amb. air	10-12	yes
3	absorption	NH_3/H_2O	steam boiler	oil, gas	waste water	>2000	yes
4	Rankine	R12	Diesel	oil	amb. air	15-20	yes
4a	Rankine	R22	Diesel	oil	soil	400	yes
5	Rankine	R12	Diesel	oil	amb. air	400	yes
6	Rankine	R114	Diesel	oil	sewage	> 2000	yes
7	Rankine	R12; R22	Otto	gas	amb. air	10-400	yes
8	Rankine	R12; R22	Otto	gas	air/ground/ surface water	400	yes
9	Rankine	R22	Stirling	oil, gas	air/ground surface water	10-12	yes
10	absorption	H_2O/Na_2S	solar		solar	15-20	yes
11	absorption	$H_2O/LiBr$	solar/gas		room air	3-4	no
12	Rankine	freon	Rankine	solar	room air	3-4	no
13	Rankine	R22	motor	electricity	ground	10-12	yes
14	absorption	NH_3/H_2O	direct	gas	amb. air	10-12	yes
15	Rankine	various	Rankine	oil, gas	amb. air	10-400	yes
16	Rankine	R12	Brayton	oil, gas	amb. air	50	yes
17	Rankine	steam/R11	Rankine	oil, gas	amb. air	400	yes
18	Rankine	various	Rankine	oil, gas	sea water	400	yes
19	absorption	$H_2O/LiBr$	direct	kerosene	waste water	> 2000	yes
20	abs./Ran.	$H_2O/LiBr$// R114	motor	electricity	waste water	> 2000	yes

Table 5-1: Case Studies

ven. The three systems not yet accounted for were very small (3-4 kW thermal output), and since none of the participants showed any interest in these or were able to produce case study material for them, they were dropped from the market study at an early stage, which meant that no case studies were produced.

For those systems for which insufficient data were available to produce complete case studies, but which were of interest to the participants, the necessary data were estimated by Battelle. In several cases revised data were then obtained by the national teams from the developers. When these were received in time they were used, but in some cases this was not possible and the Battelle data had to be used. In one case the developer did not agree with the Battelle data, since they considered them too pessimistic. However, since the developer in question was unwilling to provide its own estimates, the Battelle estimates had to be used.

5.2. Case Study Format

The format chosen for the case studies was one that would provide all the necessary information on each in such a way that the operating principles and performance could be easily understood, and the data on cost and performance readily utilised by each national team. The case studies therefore consisted of a data sheet giving a short description of the system's main characteristics, i.e. type, fuel, application, source and sink (i.e. distribution medium) type and temperatures, the performance at the design point (usually $0^{o}C$) and $+10^{o}C$ and $-10^{o}C$ ambient air temperature, the type and operation of the back-up, the year of introduction and the unit cost, installed cost and finally estimated maintanance cost expressed as a percentage of installed cost. Attached to each data sheet are a line diagram summarising the main characteristics of the system and an energy flow diagram for the design point and performance graphs. These graphs are of the coefficient of performance (COP_{eff} and COP'_{eff}) and the dimensionless thermal output (i.e. a given thermal

output divided by the design output = N_{ht}/N_d) against ambient air temperature. The normalisation was performed in order to compare systems of different thermal outputs.

6. Strengths and Weaknesses

6.1. Introduction

The objective of the technology survey was to identify advanced heat pump systems and, by consideration of their strengths and weaknesses, to indicate which systems would be best suited to each possible application and what further research and development was necessary to lead to their commercial success. The assessment of strengths and weaknesses therefore utilised the information gathered for the case studies and for the R+D trends, in addition to discussions with experts. The analysis of this information was carried out under four critical aspects: the projected performance (under design conditions and in the proposed applications), the design (with regard to size, weight, complexity, requirements for back-up, controls, etc.), operational aspects (reliability, service and maintenance requirements, service life, noise, vibration, pollution, etc.), and finally initial cost. The latter point lay more in the area of the market study, but to ignore relative capital cost, and the possibilities of reducing it, in the technology survey would have been unrealistic.

A general assessment of strengths and weaknesses was therefore first made on the basis of these four criteria, this being followed by an assessment of each system for four major areas of application. These are single-family house heating (and to a lesser extent cooling), i.e. thermal outputs of 10 - 20 kW; multi-family house heating and cooling, i.e. thermal outputs in the range 100 to 400 kW; district heating with thermal outputs in the MW range; and finally industrial applications covering a wide temperature and size range.

6.2. Performance

6.2.1. Design Point Performance

The only true assessment of performance is that in use i.e. the performance obtained over a working season or year, often referred to as the "seasonal performance factor" (SPF). However, for systems which have not yet been operated over a complete heating season, or worse not yet had their performance measured at the design point, it is necessary to estimate the SPF from measured or predicted design point data with estimation of the off-design point performance, making allowances for such factors such as auxiliary power consumption for pumps, fans, etc. and for defrosting if necessary. Thus, in order to assess performance it was necessary to estimate the SPF for each application by determining the design point COP_g, and heating capacity and the off-design point COP_g and N_{ht}. The latter take account of the sensitivity to source temperature variations, the power required for auxiliaries (N_{aux}), and the likely defrosting losses[+]. The most important factor determining the SPF_{eff} is the COP_{eff}. For electrically driven systems this is simply the ratio of the thermal output from the condenser to the electrical power input to the compressor, while for sorption systems it is the sum of the heat outputs from the condenser, absorber and possibly desorber divided by the sum of the thermal inputs to the generator and the electrical power to the solvent pump and auxiliaries (and sometimes also the compressor). For engine driven systems, (either internal or external combustion) the thermal output is the sum of that of the condenser and the heat recovered from the engine. The COP_{eff} is the total thermal output divided by the thermal input to the engine. This can be expressed as

$$COP_{eff} = COP_g \cdot \eta_m + f \cdot (1-\eta_m)$$

where COP_g is for the heat pump sub-system alone, i.e. the condenser heat output divided by the shaft power, η_m is the efficiency

[+] cycling losses not included

of the drive, i.e. shaft power divided by thermal input, and f is the fraction of engine waste heat recovered. Fig. 6-1 is a graph of COP_{eff} against η_m for various values of COP_g and f with the ranges of η_m for various drives identified. From Fig. 6-1 the following conclusions can be drawn:

a) The same COP_{eff} can be achieved by different combinations of η_m, COP_g and f. For example a COP_{eff} of 1.4 can be obtained with $\eta_m = 0.2$, $COP_g = 3$ and $f = 1.0$ (a Rankine-Rankine system) or with $\eta_m = 0.33$, $COP_g = 3$ and $f = 0.6$ (Otto-Rankine system).

b) The COP_{eff} of a system with high η_m is much more sensitive to variations in the heat pump sub-systems performance, i.e. COP_g, than one with a low η_m.

c) Even under the worst possible operating conditions (i.e. with low source temperatures and COP_g 2.0) all engine driven systems have a $COP_{eff} > 0.9$, so they are always more efficient than boilers.

d) The most efficient system is the large Diesel-Rankine system with $\eta_m = 0.4$, $COP_g = 4$ (high source temperature e.g. waste heat) and $f = 0.8$. This system can achieve a COP_{eff} of about 2.1.

Fig. 3-4 shows the average COP_{eff} for different systems with 0^oC evaporating temperature (or heat pump sub-system minimum temperature for the resorption and Ericsson-Ericsson systems) and 60^oC condensing temperature (heat pump sub-system maximum temperature). The systems are also ranked in Table 6-1 in order of COP_{eff} under similar operating conditions. The table includes the electric-Rankine system driven both by hydroelectricity ($\eta_{el} \simeq 0.9$) and thermally generated electricity ($\eta_{el} \simeq 0.3$). Three of the systems with the highest COP_{eff}, i.e. those with $COP_{eff} \geq 2$, are also unproven systems for which the figures are solely based on theoretical predictions (both resorption types and the Ericsson-Ericsson). Of the remaining systems those with COP_{eff} over 1.5 are the hydro-

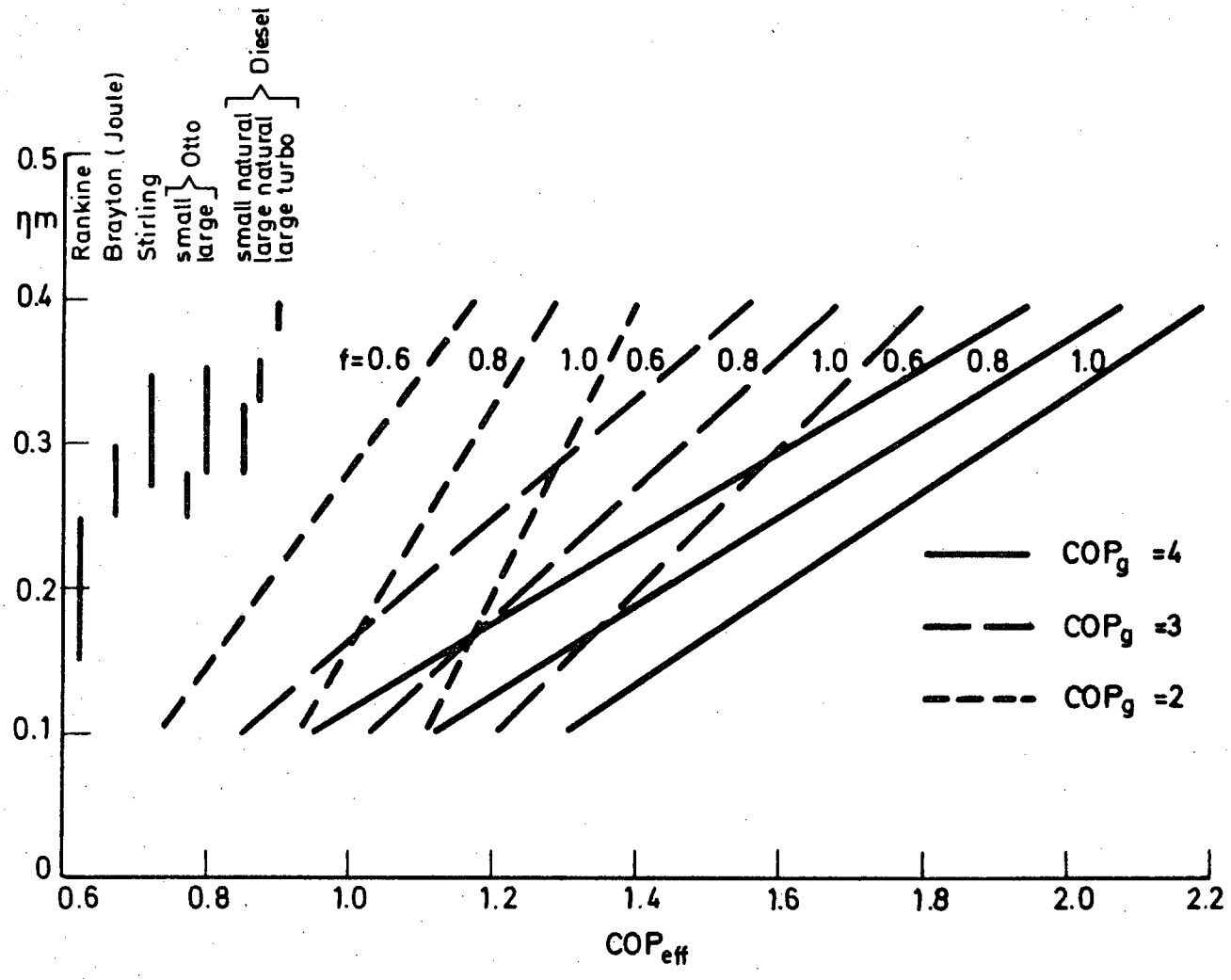

Fig. 6-1: COP_{eff} of engine driven systems as function of drive efficiency

power driven electric heat pump (which is of limited interest) and most of the engine driven systems. Of the engine driven systems only the Rankine-Rankine (single fluid) and Brayton-Rankine lie below this figure, simply because of their low drive efficiency $\eta_m < 0.27$.

Order	System	COP_{eff}
1	resorption-electric drive (hydropower)	4
2	electric-Rankine (hydropower)	2.7
3	Ericsson-Ericsson	2
4	resorption (thermal drive)	2
5	Diesel-Rankine	1.7-2.0
6	Otto-Rankine Rankine-Rankine (dual fluids)	1.4-1.6
7	two-stage absorption	1.3-1.5
8	Rankine-Rankine (single fluid) single-stage absorption	1.2-1.4
9	Brayton-Rankine	1.2-1.3
10	resorption-electric drive (thermal power generation)	1.2
11	electric-Rankine (thermal power generation)	0.9
12	heat transformer	0.5

Table 6-1: Ranking of systems by COP_{eff} at design point

The absorption systems also have $COP_{eff} < 1.5$ while the electric-Rankine system with thermally generated electricity has $COP_{eff} \simeq 0.9$. Lowest of all is the heat transformer with a $COP_{eff} \leq 0.5$.

6.2.2. Below Design Point Performance

The variation of COP_{eff} (Fig. 6-2) and capacity (Fig. 6-3) with source temperature (usually outside temperature or loosely related to the latter if either horizontal ground source or surface water are used as source) is primarily a function of the heat extracted from the environment by the evaporator and secondly of the part-load efficiency of the drive. Table 6.2. shows the size of evaporator for each system relative to that of an air source electric heat pump - the only one for which sufficient experimental data on part-load and frosting performance exists. This figure expresses not only the relative size of the evaporator but also the proportion of the total heat output which is gained from the environment - the larger the gain from the environment the higher the COP_{eff}. It also expresses the sensitivity to changes in source temperature, since if no heat, N_{env}, is gained from the environment the COP_{eff} is the same as or worse than that of a boiler. This condition occurs when the mass flow of refrigerant ($\dot{m}_r$) though the evaporator decreases to a negligable value, which depends on the refrigerant used:

$$N_{env} \propto \dot{m}_r \propto \frac{1}{v}$$

where v, is the specific volume of the refrigerant at the compressor inlet. For reciprocating compressors, R22 or R12 is used, and between 0^oC and -10^oC the mass flow $\dot{m}_r$ decreases for both fluids by a factor of 0.72. For R114 or R11 (used in rotary compressors) $\dot{m}_r$ decreases over the same range by 0.67. Thus the systems using R114 or R11 (e.g. Rankine-Rankine systems) would be more sensitive to a decrease in source temperature than is suggested by Table 6-2 The same is true of the single-stage absorption and ejector heat pumps. In the former the vapour pressure over the absorber reaches

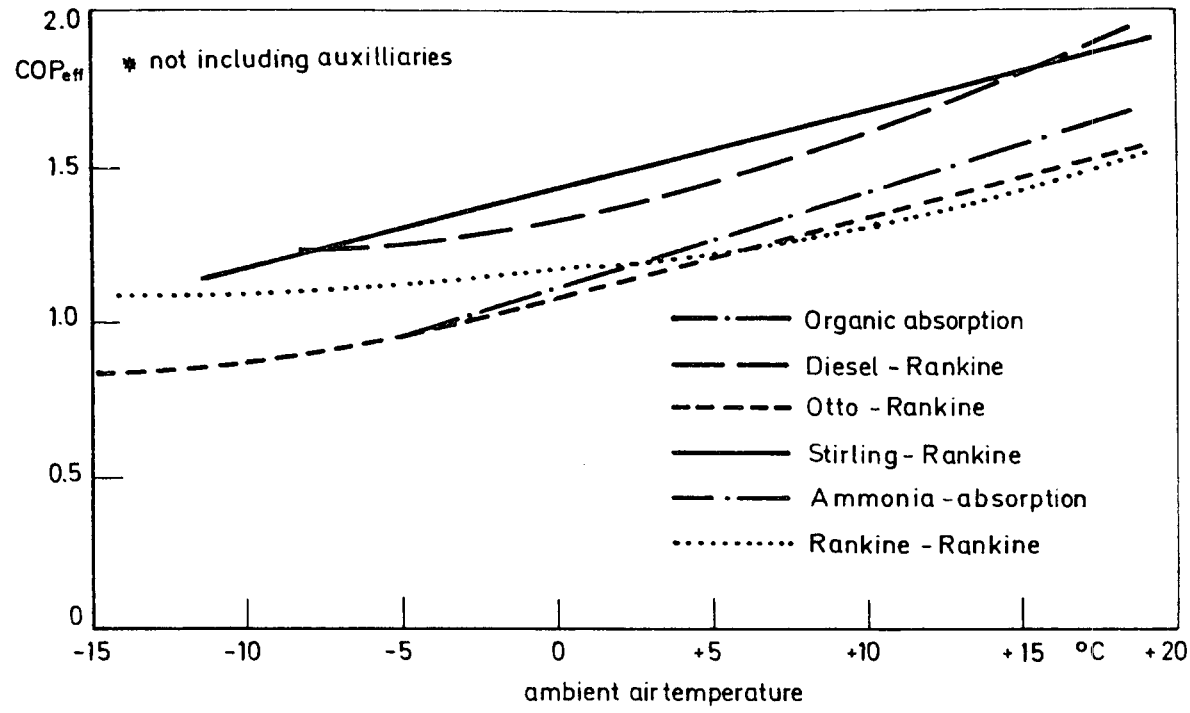

Fig. 6-2: COP_{eff}^{*} of air source heat pumps

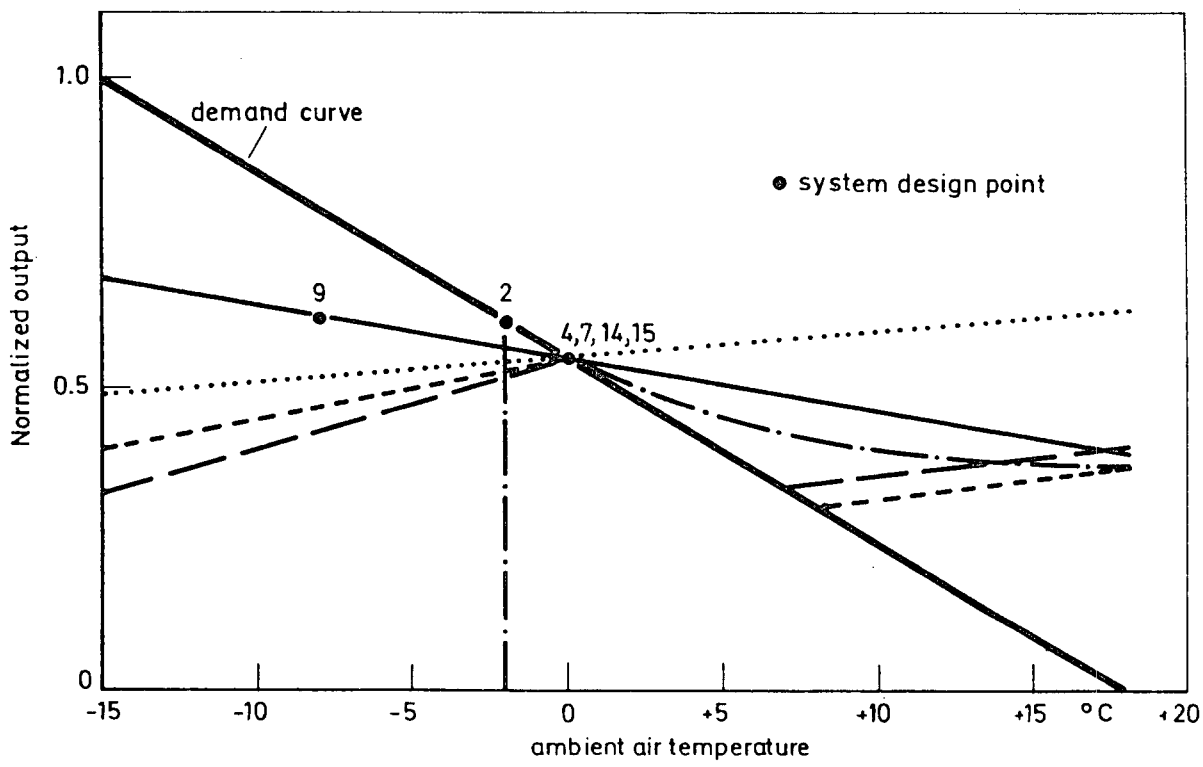

Fig. 6-3 : Normalised output of air source heat pumps

Order	System	Relative+ evaporator size	Estimated++ losses due to defrosting (%)
1	two stage absorption	0.35	1-2
2	Rankine-Rankine	0.47	1.3-2.1
3	single-stage absorption	0.45	1.4-2.3
4	ejector heat pump	0.50	1.5-2.5
5	Otto-Rankine Stirling- Rankine	0.61 0.61	1.8-3.1 1.8-3.1
6	Brayton-Rankine	0.67	2.0-3.4
7	Diesel-Rankine	0.71	2.1-3.6
8	Ericsson-Ericsson	0.67	2-3.4
9	electric-Rankine	1.0	3-5
10	heat transformer	1.14	3.5-5.7
11	resorption-electric drive	1.35	4.1-6.8

\+ Relative to electric-Rankine system

++ Estimated from defrosting losses for electric-Rankine /70/ and relative evaporator size

Table 6-2 : Ranking of systems by relative evaporator size and sensitivity to frosting

a point at which absorption becomes ineffective /49/, while for the latter the ejector pump effectiveness is a strong function of the suction vapour pressure.

Another aspect influencing below design point performance for some systems (Rankine-Rankine, absorption and ejector) is the matching of the drive subsystem and the heat pump subsystem. As already indicated the absorption system performance also depends on the absorber performance, while for the Rankine-Rankine the machinery (turbine and compressor) are likely to be mismatched off the design point. Just how mismatched cannot be quantified; although it is probably worse for single fluid systems than for two fluid systems. The capacity of the Rankine-Rankine, absorption and ejector systems below the point at which their efficiency is less than that of a boiler (or their capacity is lower than the demand) can be supplemented by operating them as a direct heating system. In the absorption system, for example, the generator/absorber loop can be used simply as a heat transfer system with the refrigerant loop isolated. Similarily the Rankine-Rankine system can operate with its feed heater being used for direct heat exchange, or a second heater or boiler can be operated in parallel with it. The most important aspects of the internal boiler operation of such systems is that this has to be designed for maximum demand and that the system is more efficient when the heat pump and internal back-up act in parallel rather than alternatively.

However Table 6-2 , to a first approximation, reflects the sensitivity of systems to variations in source temperature. Thus the systems with a middle range COP_{eff} (such as the Rankine-Rankine, and absorption systems) are less sensitive to fluctuations in source temperature than those with higher COP_{eff} at the design point, such as Diesel-Rankine. This is also true for the effect of frosting on air source systems - the smaller the contribution of the evaporator to the total heat output of the system, the lower the sensitivity to frosting losses (or fouling losses in ground water source systems). Thus the systems at the top of Table 6-2

have the advantages of

1) small evaporator, hence lower contribution to capital cost, particularly for ground source systems
2) lower sensitivity to source temperature fluctuations
3) less defrosting and fouling losses.

The effect of these three advantages is that the SPF_{eff} of these systems is better than would be expected if all systems had proportionally equal losses.

6.2.3. Auxiliaries

Another parameter that influences SPF_{eff} is the proportion of the energy input needed for the auxiliaries such as fans and pumps. For air source systems the evaporator fan power is significant, and this too, is in direct proportion to the evaporator size. Thus the absorption and Rankine-Rankine systems benefit from low fan power. However, both systems require significant pump power. The Rankine-Rankine requires a feed pump to operate over a high pressure ratio ($\simeq 5$) and the absorption systems require solvent pumps, acting over high pressure ratio. This is exacerbated by the very low efficiency ($\simeq 50$ %) of such pumps (i.e. solvent and feed pumps) for small mass flows and high pressure ratios.

However, assuming that pumps of high efficiency can be successfully developed, the below design point performance of the Rankine-Rankine and absorption systems look inherently better than in the case of the other systems.

6.2.4. Above Design Point Performance

Above design point operation of any system (see Fig. 6-3) corresponds to an excess of heat pump capacity over the demand. In simple systems, such as first generation electric heat pumps, the output is controlled by on/off switching with a small buffer store or time delay arrangement to avoid excessive starts. The range of controllability and the part-load efficiency of the systems are very important because if the control range is small or the part-load efficiency is low then the system performance above the design point will be poor. Therefore the best systems are those with a wide control range and good part-load efficiency above the design point. However, the minimum demand of a system is usually a very small fraction of that at the design point and none of the heat pump systems can be controlled (other than by switching) at very low capacities.

The parameters which effect the range of controlled output are:

1) Sensitivity of heat pump sub-system output to source temperature,
2) range of speed variation of the drive sub-system,
3) range of capacity control of the heat pump sub-system.

The sensitivity of heat pump output to source temperature has already been discussed with respect to below design point operation. Above design point the evaporator extracts increasingly more heat as the source temperature increases, which is in contrast to the decrease in demand. By reducing the capacity of the heat pump sub-system the mass flow and hence the system capacity can be reduced. For example, in compression system this can be achieved in steps, by reducing the number of cylinders in use in reciprocating compressors, or continuously, by reducing the volumetric ratio of screw compressors or by inlet vane control in centrifugal compressors. All these methods have been developed for large compressors

(>30 kW power input) and there is little reduction (≤5 %) in system efficiency by these methods. For small compressors capacity control is expensive and the part load operation is usually less efficient than full load operation. Capacity control by speed control of the drive is also possible and can be achieved in a number of ways. For electric motor systems, changing the number of poles can be used to give step changes in speed, or regulation of the supply by thyristors can give continuous speed control over a similar range (2:1). Internal combustion engines can be controlled over a range of about 2:1 to 3:1, with a reduction in drive efficiency on part load by about 5 %. The external combustion engine systems can also be speed controlled over a range of about 2:1, but as yet it is unknown what the part load efficiency is likely to be.

Table 6-3 ranks the systems by controllability and it is clear that the large engine driven systems are much more flexible than the other systems. Referring to Fig. 6-3 , which applies to small systems only, none of the systems can be controlled below about 50 % of the design capacity. At this point the output capacity begins to increase slightly due to the increasing evaporator capacity, and so below this point on/off operation becomes necessary. For most small systems it is still necessary to control by on/off switching - a method which results in reduced system life (see Sections 6.3. and 6.4.).

So far only air-source systems have been considered. Of the other sources only earth and ground water can be considered practical for small systems, while waste heat, surface water, sea water, geothermal, etc. are only applicable to larger systems. Ground water and ground sources are much less subject to temperature variations than air (see Table 2.7.) and do not have its frosting problems. The ground can be used as heat source with either horizontal or vertical coils. The former require a large surface area and follow the air temperature fluctuation to some extent but with heavy damping and reduced amplitude. They can also cause adverse environmental effects by shortening the growing season and are costly to

Order	System	Control	Control range	Characteristics
1	large Diesel-Rankine large Otto-Rankine	drive speed + compressor unloading	4:1 to 9:1	continuous/ step
2	large electric-Rankine	drive speed + compressor unloading	2:1 to 4:1	step or continuous
3	small Diesel-Rankine small Otto-Rankine	drive speed	2:1 to 3:1	continuous
	absorption	solvent pump regulation of gene- rator temperature	2:1 to 3:1	continuous
	Brayton-Rankine	drive speed and on-off	2:1 to 3:1	continuous and step
4	Stirling-Rankine	speed	2:1	continuous
	small electric-Rankine	drive speed	2:1	step
	Rankine-Rankine	speed	2:1	continuous

Table 6-3: Ranking of systems by controllability

instal. The vertical coils are much more compact, are insensitive to fluctuations in the ambient air temperature, have little environmental impact, but are also relatively expensive to instal. In both cases the cost of the heat source equipment approximately equals that of the heat pump unit. The greatest technical disadvantage of ground sources is that an intermediate heat transfer fluid has to be used, and this entails a reduction in evaporating temperature. Thus the SPF_{eff} of such systems is little better than that of air source equipment. However, the heating capacity of the heat pump does not decrease during colder spells to the same extent as air source equipment, giving a better match to the heat demand curve. A further disadvantage of vertical systems is the knowledge of local geology that is necessary before the sizing and costing of an installation can be made.

Ground water systems are similar to vertical ground source systems in their characteristics in so far as there is little fluctuation of source temperature throughout the year relative to air. Most ground water systems require two bore holes, for feed and return water, since water authorities in most countries do not permit wastage of this resource. In addition the water authorities in some countries are concerned that leaks of refrigerant could pollute the ground water and may insist on the use of an intermediate fluid. Fouling of heat exchangers can be a severe problem especially where there is a high iron content in the water.

6.2.5. Seasonal Performance and Energy Saving

The true heating SPF_{eff} can only be estimated for each application and climatic region (this was a major task of the market study). It is therefore not possible to assess the systems solely on the variation of COP_{eff} and N_{ht} with source temperature. In Section 6.5. the systems shown in Fig. 6-2 and 6-3 are compared for a particular application and climate to assess their SPF_{eff} under

these circumstances.

The energy savingcapability of the systems must in the end be assessed by comparing a complete heating season performance, i.e. SPF_{eff}, against that of a conventional system. As an example Fig. 6-4 shows the percentage potential energy saving of heat pumps as a function of the COP_{eff} and the conventional boiler efficiency η_b, for which the full load value of a new boiler should be used. For a more valid comparison, SPF_{eff} and an annual value of η_b should be used.

From Fig. 6-4 some general points can be made:

1) All systems with COP_{eff} over 1.0 save energy.
2) 30 % energy saving can be achieved with a COP_{eff} of 1.2, of which most of the advanced systems are capable.
3) 50 % energy saving requires a COP_{eff} of about 1.7. Of the systems at advanced stages of development only the large Diesel-Rankine system is capable of achieving this figure.

6.2.6. Cooling Performance

The cooling performance of advanced heat pumps is of interest to countries such as the USA, Japan, Spain and Italy, where summer cooling and air conditioning are often required. Table 6-4 compares the cooling coefficient of performance and capacity of the various systems for 35°C ambient air temperature. Also given is the US Standard, /26/, which lays down minimum requirements for cooling coefficient of performance. Neither of the coefficients of performance include auxiliaries. The cooling capacity at 35°C ambient air temperature and 20°C indoor temperature is normalised by dividing by the heating capacity, N_{ht}, at 0°C ambient and 20°C indoor temperature. In terms of cooling COP the electric system with hydro-electricity is best, but if it is ignored because of its lack of general applicability the best system is the Brayton-Rankine, followed by the Stirling-Rankine system. In fact most of the fossil

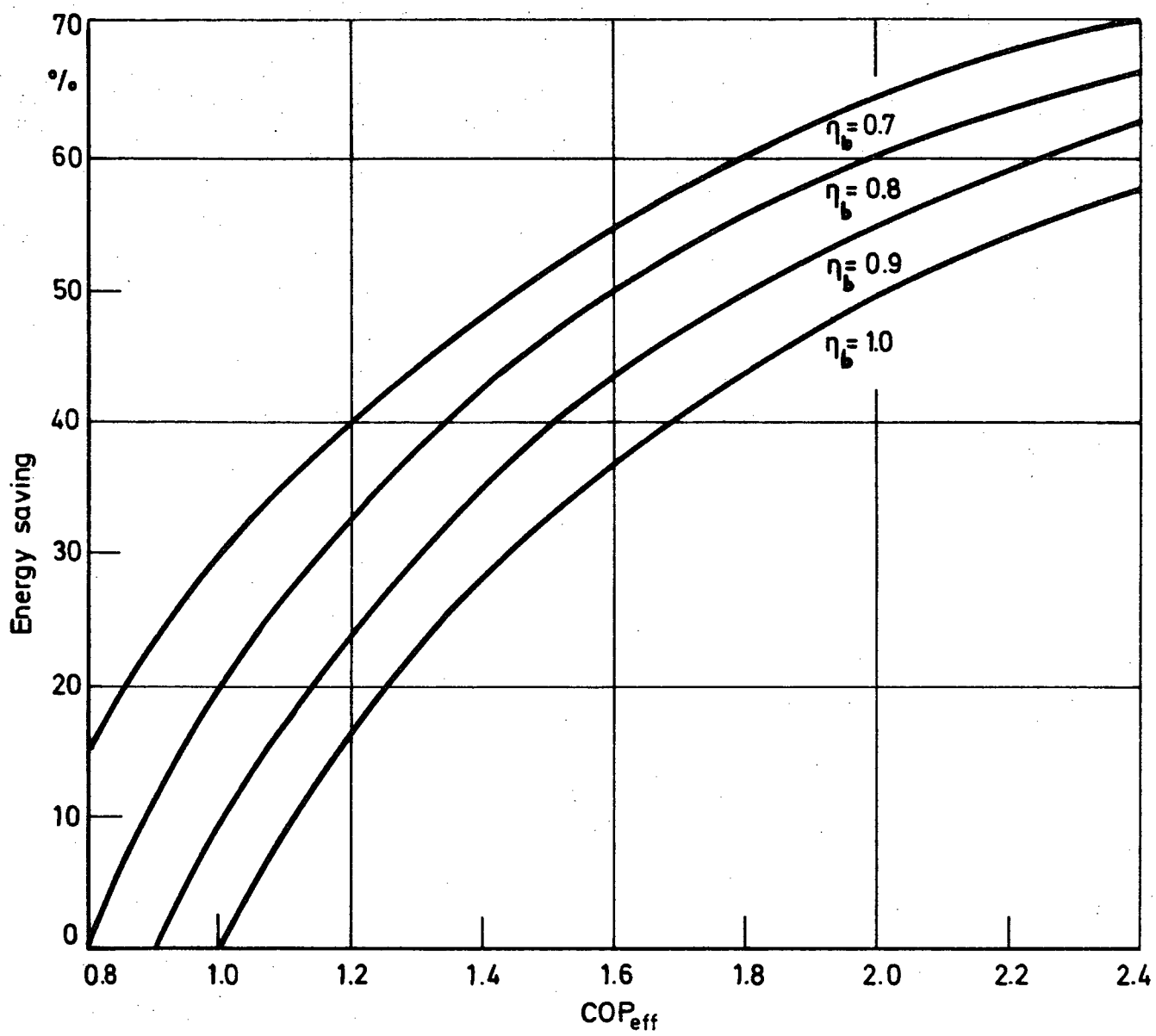

Fig. 6-4 : Energy saving potential of heat pump systems

Order		COP^{+}_{eff} 1) predicted	COP^{+}_{eff} 2) U.S.Standard	Relative 3) cooling capacity
1	electric-Rankine (hydroelectrc)	2	2.0-2.2 (1.8-2.0)	1.3
2	Brayton-Rankine	1.1	0.48	1.2
3	Stirling-Rankine	0.88	0.48	0.7
4	electric-Rankine (thermally gen. elect.)	2.5-2.7 (0.8-0.9)	2.0-2.2 (0.67-0.73)	1.3
5	large Diesel-Rankine	0.8	0.48	0.5
6	large Otto-Rankine small Diesel-Rankine	0.67	0.48	0.5
7	small Otto-Rankine	0.6	0.48	0.5
8	single-stage-absorption	0.5-0.6	0.48	0.4
9	Rankine-Rankine (single fluid)	0.4-0.5	0.48	0.4

1) COP^{+}_{eff} does not include auxiliaries

2) ASHRAE STANDARD 90-75 /26/, not including auxiliaries, primary energy-related value in parenthesis

3) Relative to design heating capacity N_d (kW)

Table 6-4 : Cooling performance of heat pumps

fuel-fired systems easily exceed the performance required by the ASHRAE Standard /26/. However, the electric-Rankine system with thermally generated power has a prime energy-related coefficient of performance in the range 0.8 to 0.9, which is superior to all but the Brayton-Rankine and Stirling-Rankine systems. With respect to cooling capacity the electric-Rankine, Brayton-Rankine and Stirling-Rankine have the highest cooling capacities relative to their heating capacity. Thus if a system is sized for a cooling load larger than the heating load, e.g. in the Southern US , then the electric-Rankine and Brayton-Rankine systems are superior. If sized for more severe winter conditions and a smaller summer cooling load, e.g. North East US, then the Stirling-Rankine is the best. Thus for combined heating and cooling applications there would appear to be no justification for the development of fossil fuelled systems other than the Brayton-Rankine and Stirling-Rankine systems, since most of them are at best equal or inferior to the well-established electric-Rankine system.

6.3. Design

The most important aspects of heat pump design are those relative to performance controllability, reliability and cost, which are discussed in Sections 6.2., 6.4. and 6.5. However, there are a number of other important aspects, which relate to the installation and use of systems and which can be significant factors in their acceptability. These include the size and weight of the system, the necessity of a back-up, the method of control, the safety and the flexibility with respect to different source and sink types and other characteristics.

6.3.1. Size and Weight

The unit size and weight are only significant for the smaller systems, especially for single room (3-4 kW) or single family house heating (10-20 kW) and cooling. The most important criterion is that the system including its back-up should not require more space than the conventional alternative, or at worst require only a little more space. For new installations the latter is more valid, but in the case of retrofit applications - which is probably the largest potential market - the available space could be severely limited. Clearly all those systems which require an additional back-up are at a disadvantage, even though in the retrofit case the existing boiler would be used as back-up. The actual size and weight of each heat pump systems depends on its application. In Section 6.5.1. the systems are discussed for single family house heating, with air as source and water as sink - the most likely combination in Western Europe.

6.3.2. Energy Demand

The major impetus towards the use of heat pumps is energy conservation, the secondary objective usually being to substitute fuel, i.e. replace imported by home produced fuel. The higher the COP_{eff} and SPF_{eff} of a system the greater the energy saving (see Fig.

6-4), but this is no guide to the degree of fuel substitution. In addition the issue is complicated by the use of mixed fuel systems such as electric heat pump with an oil-fired back-up, for which the value of the energy saving and degree of fuel substitution is contentious. A further aspect is the strain the systems would place on the energy supply system. This is a well known problem with the electric heat pumps which the electricity utilities promote, but only when bivalent (and preferably bivalent - alternative) so that the peak demand on the electricity network is not further increased. Indeed some gas utilities in Germany now discourage the use of gas-fired back-ups for electric heat pumps /69/ because the peak demand is transferred to the gas system. Therefore the possible impact of advanced heat pumps in this respect should also be considered.

Table 6-5 ranks small systems by the ratio of peak demand (fuel or electricity) to mean demand, i.e. the demand at +3°C ambient air temperature. For each system the type of back-up is specified and the mode of operation (monovalent or bivalent, parallel or alternative) and the ambient temperatures at which the heat pump is cut out and at which the back-up is cut in. Also shown is the sizing of the back-up and the heat pump as percentage of the heat demand at -15°C ambient temperature. Included in Table 6-5 is the simple gas boiler, here assumed to have 75 % efficiency at full load (-15°C) and 65 % at 45 % load (+3°C). On this basis the peak demand is approximately double the mean demand for a gas boiler.

Also included is the oil-fired Diesel-Rankine system, for which the relative peak demand is unimportant since the oil storage overcomes this problem. For two of the electric systems (those that use an oil- or gas-fired back-up) relative peak demand figures are given both uncorrected and corrected to prime energy. Comparing the four electric systems listed it is clear that the electric back-up is most unsatisfactory as it has a very high peak demand while the monovalent system requires a heat pump at least double the size of the others and as in primary energy related terms there is

Order	Operation	Heat pump		Back-up	Cut out/in temp ($0^{o}C$)		% full capacity		Ratio	Advantages	Disadvantages
		drive	heat pump		heat pump	back-up	heat pump at $+3^{o}C$	back-up at $-15^{o}C$	peak/ mean power demand		
1	monovalent	Brayton	Rankine	-	-15	-	45	-	1.5	simplicity, compactness, low peak demand	
2	monovalent	-	-	gas boiler	-15	+18	-	100	1.5	simplicity, compactness, low peak demand	high mean demand
3	bivalent-parallel	electric	Rankine	boiler/furnace (oil)	-15	+3	45	70	4.9^{+} (2.1)	flexibility	large size, requires oil boiler to meet peak demand
4	bivalent-alternative	electric	Rankine	boiler/furnace (oil)	+3	+3	45	100	7.4^{+} (2.2)	flexibility, best electricity tariff	large size, requires oil-boiler to meet peak demand
5	monovalent	electric	Rankine	none	-15	-	100	-	2.8	simplicity	large size, high capital cost, system grossly over=sized for average conditions, poor controllability
6	bivalent-parallel	Otto	Rankine	boiler(gas)	-15	+3	45	60	3.3	flexibility	large peak gas demand, large size
7	bivalent-parallel	Stirling	Rankine	furnace (gas) internal	-15	+0	55 (at $0^{o}C$)	35	3.4	simplicity, compactness, flexibility	large peak gas demand

continued overleaf

Table 6-5: Ranking of small systems by peak demand

8	bivalent-alternative	absorption (single stage)		boiler(gas) internal	-2	-2	60 (at -2°C)	100	3.6	simplicity flexibility, compactness	large peak gas demand
	bivalent-parallel	Rankine	Rankine	boiler(gas)	-5	0	55 (at 0°C)	100	3.6	simplicity, flexibility, compactness	large peak gas demand
9	bivalent-parallel	Diesel	Rankine	boiler(oil)	-15	+3	45	70	3.8	flexibility	large size
10	bivalent-parallel	electric	Rankine	electric	-15	+3	45	70	4.7	simplicity, compactness	high running cost, large electric peak demand, no energy saving against boiler

Table 6-5: Ranking of small systems by peak demand

little difference between the bivalent-parallel and bivalent-alternative systems. The significant difference is that for the bivalent-alternative the peak demand on the gas system is greater.

Considering only the gas-driven advanced systems, the Brayton-Rankine is clearly superior to the others (from this aspect). This results from its high degree of controllability and sizing for the maximum heating load. All the remaining systems have peak demands between 3 and 4 times the mean demand; giving a ratio which is double that of the simple boiler. This means that from the point of view of the gas utilities the same size of network has to be installed for a gas-fired heat pump as for a simple gas boiler with less gas sold per installation. Thus the widespread use of gas-fired heat pumps is likely to produce the same problems for the gas utilities as electric heat pumps produce for either them or the electricity utilities.

6.3.3. Safety

Another design aspect is safety, comprising the risks from fire, explosion and toxicity. Table 6-6 lists some of the risks and indicates which heat pumps could produce them. The major problems would appear to arise from those safety risks resulting from the introduction of these systems into domestic premises. These are mainly risks associated with the release of working fluids, their pyrolysis or combustion or interaction with air or water. Thus ammonia systems, those bringing high temperatures into proximity with organic working fluids (absorption, Rankine-Rankine), and those which could introduce toxic or possibly carcinogenic substances into domestic water show greatest risks.

Safety standards are quite strict for ammonia systems; for residential locations they require a charge of no greater than 2.5 kg /129, 130/ or prohibit their use completely (Japan). Additional restrictions prohibit their use for air conditioning, for human comfort and close location to electrical switchgear /129/.

Risk	Possible Causes	Systems likely to produce risks	Possible remedies
Fire	leak of inflammable substances	organic absorption (E181)	intermediate heat transfer fluid (expensive)
	leak of fuel	all gas- or oil-fired systems	normal risk - standard safety procedures
		Stirling engine (H_2)	use HE instead of H_2 as work fluid (expensive)
Explosion	leak of fuel	all gas- or oil-fired systems	normal risk - standard safety procedures
	leak of explosive substances	NH_3/H_2O absorption systems	system enclosure vented to atmosphere in event of leak, or double-skin system
Toxicity	leak of toxic substances	NH_3/H_2O absorption systems	system enclosure vented to atmosphere in event of leak, or double-skin system
	production of toxic substances in combustor of drive	all systems with internal or external combustion and use of R12, R22, R114 etc.	combustor air must be external-exhaust or flue must be ducted beyond risk zone
Other	physical injury by machinery	all mechanical systems with open shafts	sealed systems or interlocked enclosures
	production of corrosive substances	all combustion systems	better construction materials

Table 6-6 : Safety problems with advanced heat pumps

For Group 1 refrigerants (R12, 22, 114 etc.) the charge size is limited by the maximum permissable concentration of vapour in the smallest humanly occupied space /129/.

The remedies suggested are that -

(1) all combustion systems should breath external air only,

(2) the exhaust outlet should be remote from the inlet and from locations where it can be inhaled,

(3) domestic hot water (for baths, showers etc.) should not be directly heated by the working fluid,

(4) system working fluid charges should be as small as possible,

(5) double-skin heat exchangers or intermediate heat transfer fluids should be employed wherever possible (feed heaters, generators etc.)

6.4. Operation

The operational aspect of advanced heat pump systems is one of the most difficult to assess as many of the systems have not yet been in operation or have operated only as prototypes. The most important factors in the operation of such systems are their controllability, reliability, servicing needs, life, and environmental effects. All these have to be considered from several different points of view, such as that of the user, the supplier, the installer and service contractor, the fuel supplier, the local authority and society in general.

6.4.1. Control

Controllability has been already discussed at length in Section 6.2. The aspects of controllability relevant to the operation of the heat pump are the complexity of auxiliary equipment required and the effect which the method and type of controls have on system life and reliability. In these respects the simple on/off control system is most unsatisfactory, inducing accelerated wear in mechanical systems and giving increased thermal losses and slow system response (e.g. in the absorption systems). More complex control methods could entail greater capital cost and possible system failures due to control system unreliability or lack of adjustment. The avoidance of on/off operation should however be a design objective for all systems, although it cannot be avoided at minimum system loadings, e.g. in spring and autumn months.

6.4.2. Reliability

Table 6-7 shows the possible failure modes for advanced heat pumps caused by on/off control. It is generally recommended that some of the techniques which have been employed for electric-Rankine systems (items 1-6) should be used for the heat pump sub-system, while the engine systems should employ additional protective measures for the motor itself (e.g. item 3).

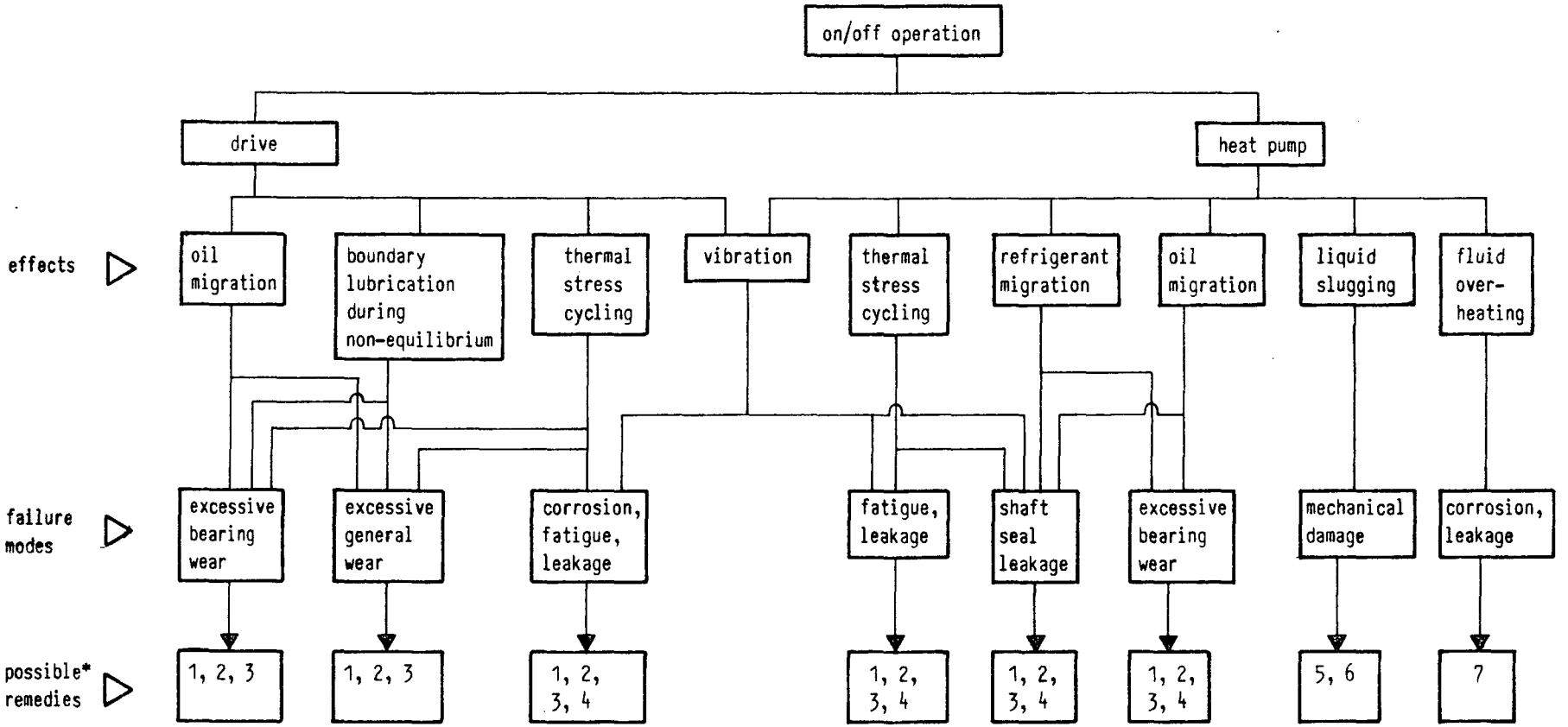

systems	Diesel-Rankine Otto-Rankine Stirling-Rankine Rankine-Rankine (free piston)	1, 2, 3, 4, 5, 6.	Rankine-Rankine (turbine) sorption	1, 2, 3, 4, 5, 6, 7. 1, 2, 4, 7.

* 1. minimum run time interlock
2. buffer heat store
3. thermostatic oil heating during off period
4. compressor unload during start up
5. use capillary expansion device and suction accumulator
6. use pump-down with thermostatic expansion valve
7. operate feed pump before start-up

Table 6-7 : Failure modes caused by on/off control

Reliability is also determined by effects other than the controls. These include fouling of the heat exchangers, loss of adjustment of settings, loss of charge due to corrosion or fatigue in normal running, air or water in the refrigerant system, etc. For the systems employing the conventional reciprocating rotary or centrifugal compressors, the normal system practices developed for electric heat pumps and other refrigerating and air conditioning systems with widely fluctuating evaporating and condensing temperatures should be employed. There is extensive experience particularly in the U.S., concerning the failure modes of such systems /64, 66/. Good system practice includes the use of suction accumulators, sump heaters, pump-downs and/or check valves, and evaporator defrost control by air-side differential air pressure transducers. System cleanliness and good control over system charging are important, as are reliable controls and intruments.

The internal combustion engine driven systems, particularly small systems (<100 kW shaft power), also have the reliability of the prime mover as a significant factor. Larger systems have been in operation as heat pump drives for about three years in West Germany and also there is considerable experience of their use for other stationary duties.

Recent reports on these Otto-Rankine heat pump installations, which are mainly for swimming pool and leisure centre heating, indicate that the initial periods were not without problems with the engines and to a certain extent the compressor. Table 6-8 lists the problems found with two such installations. The major problems appear to have been those associated with leaks of refrigerant (particularly from shaft seals) into the engine exhaust inlet with the possible production of toxic substances. The reliability problems of large Diesel engine systems can be expected to be similar to those of large Otto systems.
Small Otto and Diesel systems have not been operated long enough to be able to assess their reliability. However, development work to convert automobile Otto engines for heat pump drives has indicated a number of modifications to improve reliability and prolong

No.	System Description						Instal. date	Installation problems	Reliability problems	Oil consumption (l/h)	Service intervals		Ref.
	Output (kW)	Source temp. (°C)	Delivery temp. (°C)	Motor type and shaft power (kW)	Compressor type	Refrigerant					Oil and oil filter (hrs)	spark plugs (hrs)	
1	3x1270	+10	+45/+80	Otto 3x235	twin screw	R22	Sept. 1977	1) system initially oversized, excessive on/off operation 2) engine air inlet changed to external for safety	1) 4 months life of exhaust gas heat exchanger 2) refrigerant leaks from crankshaft seal and oil separator entered exhaust	not known	1500-4000	6000-10000	/131/
2	700	+8/+25	+24/+55	Otto 1x83	reciprocating	R22	March 1977	none stated	1) crankshaft seal replaced every 1000 hrs 2) refrigerant expansion bellows failed 3) water leak into exhaust gas heat exchanger 4) oscillations in evaporating temp. caused by wrong size expansion valve 5) starter motor changed after 3700 hours	0.09	1000	1000-1600	/132/

Table 6-8 : Reliability and service: Otto-Rankine heat pump systems

life /21/. These are summarised in Table 6-9 , along with further comments received from engine manufacturers. These modifications and system practices are considered necessary to ensure service intervals of 1000 hours, which is equivalent to about five times normal automobile industry practice and this is only approximately one half to three quarters of a heating season. A Ford engine of approximately 30 kW shaft power described in reference /21/, will incorporate the above modifications and will be available in mid-1980.

Smaller (<30 kW) Otto engines with water cooling are not available for heat pump drives, although some heat pump manufacturers have advertised systems with them. Thus the COP_{eff} of such systems is considerable less than the theoretically possible since only exhaust waste heat is recovered.

External combustion engine driven systems should inherently be more reliable than internal combustion systems because they have stoichiometric combustion, and also no erosion of valves or oil degradation by the combustion gases. A study of past failures of such systems has been undertaken by the American Gas Association /134/ and the history of the development of free piston, turbine and absorption systems shows failure to achieve performance and first cost objectives. In addition, the reliability problems of systems such as the free-piston Otto-Rankine and rotary vane Rankine-Rankine systems led to their abandonment while the inability to develop an efficient ejector led to the abandonment of an ejector-Rankine system.

The kinematic Stirling systems are however complicated and as yet unproved in practice. The free piston Stirling system is also complex, particularly with regard to the sealing between the engine and the compressor within the hermetic casing. The free piston and turbine Rankine-Rankine systems are very much simpler in construction and should show high reliability. The latter type with a single fluid is particularly simple mechanically, with no shaft

1. Hardened valve seats and valves
2. Integrated heat recovery package for cooling water and exhaust gas and cooling water heater for off periods
3. Electronic ignition
4. Speed control by governor operation from inlet vacuum
5. Enlarged oil filter
6. Oil cooler for normal running
7. Oil heater for off periods
8. Auxilliary oil tank to increase oil charge to be sufficient for 1000 hours
9. Enlarged air filter
10. Air inlet from exterior
11. Service every 1000 hrs: oil and oil filter change, spark-plug change, valve clearance adjustment

Table 6-9 : Improvements to automotive Otto engines to increase life and reliability /21/

seals, valves or lubricant to cause failure. The possible causes of unreliability will be those associated with control and regulation, since the high speed turbine assembly uses its high rotational speed to create a gas bearing, and also those associated with the possible breakdown of the work fluid if high feed heater temperatures are used to obtain high performance. The absence of oil (and iron which acts as a catalyst) from the system increases the chances of success. The feed pump could contribute to unreliability, since it has to pump liquid over a wide pressure range.

Sorption systems require a solvent pump (sometimes two) which has to operate under the same conditions as the feed pump of the Rankine-Rankine systems. Also the generator, like the Rankine-Rankine feed heater, could produce chemical breakdown, or reaction between the solvent and the refrigerant. This is particularly true of the organic systems, on which little chemical reactivity and stability data is available.

In general terms it would appear that the systems with the greatest potential reliability are the sorption and Rankine-Rankine systems, followed by the Stirling-Rankine and Brayton-Rankine systems.

6.4.3. System Life

System life is closely related to reliability, service and maintenance. From the field of refrigeration it is clear that sorption systems have very long lives - longer than equivalent compression systems. The internal combustion engine systems, particularly small ones, are likely to have the shortest lives, while the external combustion systems would be intermediate. Over a 10-year life a heat pump system can be expected to operate approximately 10,000 to 40,000 hours, and this compares to between 1,000 and 2,000 hours for an automobile engine (with services about every 100 hours) and about 30,000 for a domestic refrigerator. It is therefore considered realistic to expect 10 to 15 years for an electric-Rankine system, similar for the Otto-Rankine and Diesel-

Rankine systems, but with periodic engine overhauls or exchanges, and 15 to 20 years for the external combustion and sorption systems.

6.4.4. Service and Maintenance

The service and maintenance requirements and costs can at present only be roughly estimated. Table 6-10 shows the service intervals, service requirements and estimated costs for similar sized systems for a single family house. It is quite clear that with the present technology the Otto and Diesel driven systems are uncompetitive in this respect. The situation is further complicated by the mix of technical skills required by such systems (the motor mechanic for the engine and the refrigeration mechanic for the heat pump). Unless an infrastructure can be established with a network of mechanics trained in both skills then service and maintenance will be a troublesome aspect in the possible use of these systems. Not included in Table 6-10 are the costs of a replacement engine or a complete overhaul, which would be required at least in the life of the system. A complete overhaul costs approximately 30 % of a new engine cost, while a replacement engine could cost 50 % or more of a new engine cost (plus installation cost).

The absorption, Rankine-Rankine and free piston Stirling-Rankine should require considerably less maintenance since they have few moving parts and these can be easily replaced. The major uncertainties concern the life, performance and reliability of the feed pump in the Rankine-Rankine and the solvent pump the the absorption systems, which pump a low mass flow over a large pressure ratio, often with liquids that cause swelling or leaching of the plastics and rubbers used in such pumps. The complete engine-compressor assembly in the free piston Stirling-Rankine and Rankine-Rankine units is likely to be their major source of unreliability, and the servicing of such units could be difficult in the

System	Service interval+	Service requirements	Annual++ service cost (DM/p.a.)
sorption	annual	clean and set burner; check charge level, fans, solvent pump and controls; clean air source evaporator	100 to 150
Rankine-Rankine	annual	clean and set burner; check charge level, feed pump, controls and fans; clean air source evaporator	100 to 150
Stirling-Rankine	annual	clean and set burner; check charge level; check controls and fans; clean air source evaporator	100 to 150
Brayton-Rankine	annual	clean and set burner; check charge level; check controls, fans and airfilter; clean air source evaporator and recuperator	100 to 150
Otto-Rankine	semi-annual	change oil and oil filter; change spark-plugs; set valves; change air filter; clean exhaust heat exchanger; check charge level; clean air source evaporator; check controls and fans	500
Diesel-Rankine	semi-annual	as Otto-Rankine, but excluding spark-plugs	500

+ 2000 hr heating year
++ costs estimated at DM 50 (travel)
DM 50/hour (labour)
includes back-up, not including recharging with refrigerant or working gas or replacing parts other than specified as necessary

Table 6-10.: Service and maintenance requirements

field. On the other hand the complete unit could be easily exchanged.

For all systems there are two possible methods of organising service and maintenance for the domestic and commercial sectors.

1. Break-down service: this is common practice with conventional boiler systems, but depends on the manufacturer or installer having a 24 hour service network and a stock of emergency spares. This system lends itself more to the use of complete replacement units (engine, compressor units etc.) and so involves greater risks and higher service costs, but only in the event of a breakdown.

2. Contract service system: this arrangement requires the manufacturer, installer or utility (gas, electric or oil supplier) to offer the user a contract for annual or biannual servicing of the system and a 24 hour emergency call-out service. The customer pays an annual fee for the service contract, which does not include parts and which provides for the annual service visit and emergency system. This method has considerable benefits for the customer (particularly security), while for the supplier the number of emergency call-outs are minimized and he can by his approach ensure better reliability and a good reputation for the product. This type of arrangement is considered necessary for the engine driven systems, which without regular maintenance by skilled personnel could prove unreliable enough to spoil the developing market.

6.4.5. Environmental Effects

The environmental effects of the use of the advanced heat pump systems have to be considered since their noise and vibration, emissions etc. could place severe restrictions on their use. Table 6-11 shows the possible problems that may be encountered with their widespread use, from which it can be seen that the

System	Local effects			Larger scale effects	Malfunctions	Restrictions
	emission	noise	vibration			
electric Rankine	none	≃35 dBA low frequency	low	SO_2 from coal, or nuclear waste disposal;large-scale waste heat disposal; peak demand on electricity supply; little energy saving potential		bivalent alternative with oil; back-up favoured by utilities; local restrictions on noise from air source systems
Otto-Rankine	CO NO_x (high)	≃50 dBA low frequency	moderate; needs heavy base and vibration isolation	noise nuisance to neighbours from air inlet and exhaust; high peak demand on gas network	possible production of phosgene in exhaust	local noise control regulations
Diesel-Rankine	CO NO_x SO_2 (high) + soot	≃50 dBA	moderate/high; needs heavy base and vibration isolation	SO_2 in local environment; noise nuisance to neighbours from air inlet and exhaust; usually requires oil; little or no import saving	possible production of phosgene in exhaust	local noise control regulations
Stirling-Rankine (free piston)	CO NO_x (low)	≃50 dBA low frequency	high, needs heavy base and vibration isolation	possible noise nuisance; possible peak demand on gas network	possible production of phosgene in exhaust	local noise control regulations
Stirling-Rankine (kinematic)	CO NO_x (low)	⩽50 dBA middle frequency	low	possible peak demand on gas network	possible production of phosgene in exhaust	
Rankine-Rankine (turbine)	CO NO_x	30/40 dBA low/ high frequency	low	possible peak demand on gas network	possible production of phosgene in exhause	
Rankine-Rankine (free piston)	CO NO_x (low)	≃50 dBA low frequency	high, needs heavy base and vibration isolation	possible noise nuisance; possible high peak demand on gas network	possible production of phosgene in exhaust	local noise control regualtions
Sorption	CO NO_x (low)	30/40 dBA low/ middle frequency	low	possible peak demand on gas network	NH_3 emission locally or possible phosgene production in exhaust	2.5 kg NH_3 max. permiss. charge
Brayton-Rankine	CO NO_x (low)	≃50 dBA high frequency	low	possible noise nuisance	possible production of phosgene in exhaust	local noise control regulations

Table 6-11.: Environmental and social effects of the use of heat pumps

external combustion systems (Brayton-Rankine, Rankine-Rankine, Stirling-Rankine and sorption) are the best, and of these the Rankine-Rankine (turbine) sorption (organic) and kinematic Stirling-Rankine have the least detrimental points.

An additional environmental problem is that associated with the possible leak of secondary fluids (such as ethylene glycol, brine or fluorocarbons if direct expansion coils are used) into the ground or ground water when either the earth or ground water are used as heat source. This could result in pollution of either the soil itself, or more importantly drinking water supplies where the ground water is used for this purpose.

6.5. Applications

6.5.1. Domestic

The potential energy saving has been the stimulus for the development of fossil fuel driven heat pumps for domestic heating, and for this application they have to compete against conventional boilers and furnaces and also against electric heat pumps (Electric-Rankine). Advanced heat pumps have the advantages over the latter of

- higher primary energy saving (see Fig. 6-4)
- lower peak energy demand (see Table 6-5)
- greater controllability (see Table 6-3)
- less sensitivity to source temperature fluctuations (see Table 6-2)
- less sensitivity to frosting (see Table 6-2).

The choice of possible systems is wide, and a selection of the most suitable systems for this application has to be based on many other factors as well as those listed above. Table 6-12 gives an analysis of the competing advanced systems (including an advanced electric driven system) for air source, water sink and 20 kW maximum heat demand against many criteria. These have been grouped under four main headings (performance, design, operation and first cost). The comparison is based on the Case Study data (see Appendix), and is a much simplified overview of the characteristics of each system. In particular the first cost data can be misleading, since for some systems the costs are target first costs indicated by the developers i.e. those which they foresee as economically attractive (Rankine-Rankine, Stirling-Rankine, Diesel-Rankine and Absorption), while others are based on present selling costs (Electric-Rankine and Otto-Rankine). In addition, German first cost estimates are often considerably higher than those from other countries.

Fuel	Electric	Gas/Oil						Comments
		External Combustion				Internal Combustion		
Drive	Motor	Rankine (Turbine)	Stirling (Free piston)	-	-	Otto	Diesel	
Heat Pump	Rankine	Rankine	Rankine	Absorption	Resorption	Rankine	Rankine	
PERFORMANCE								
COP_g	2.5(0.75)	1.1 - 1.2	1.3 - 1.4	1.3 - 1.2		1.1	1.3 - 1.4	
Sensitivity to T_s	high	low	medium	medium		medium	medium	
SPF_g	2.7(0.81)	1.2	1.5	1.2		1.1	1.5	
Sensitivity to frosting	high (3-5 %)	low (1 - 2 %)	medium (~2 %)	low (1 - 2 %)	unknown	low (1-2 %)	medium (~2 %)	COP_g at T_s = 0°C, T_H = 45°C. For electric system ( ) refers to electricity efficiency of 0.3
T_s (°C) at COP_g = 1	+2(COP_g= 3.3)	~ -10	≤ -10	-4		-4	≤ -10	
SPF_{eff}	2.5 (0.75)	1.1 - 1.2	~ 1.3	1.1 - 1.2		~ 1.1	~ 1.3	
Prime energy saving	0	25 - 30 %	40 - 45 %	25 - 30 %		20 - 25 %	40 - 45 %	
DESIGN								
Size (h.p. only) (m^3)	0.5 - 0.7	≤ 1	0.9	0.8 - 1	> 1	1.3	1.2	
Weight (h.p. only (kg)	150 - 200	~ 150	~ 200	≤ 200	~ 200	175	185	
Back-up	50 %: external	50 %: internal	40 %: external	100 %: internal	100 %: internal	66 %: external	66 %: external	
Control	possible speed (2:1) + on/off	speed + on/off	speed (2:1) + on/off	feed pump speed + on/off	feed pump speed + on/off	speed (2:1) + on/off	speed (2:1) + on/off	() Range of speed control
Safety: fire	low	low	low	NH_3: high; other: low	NH_3: high; other: low	low	low	
toxicity	low	low	low	NH_3: high; other: low	NH_3: high; other: low	low	low	
OPERATION								
Controlability	low	medium	high	medium	medium	high	high	
Reliability	medium	high	medium	high	high	low	low	
Service needs	medium	low	high	low	low	high	high	
System life (yrs)	10/15	15	15/20	15/20	15/20	10/15	10/15	
Noise and Vibration	medium	low	medium	low	low	high	high	
Pollution	high: distrib.	medium: local	medium: local	medium: local	medium: local	medium: local	high: local	
FIRST COST (DM)								
Heat Pump	8000/-	-/3200	-/3000	8000/4000	8000+/4000+	14,9000/-	-/ 9,000	Relative Cost is total system cost divided by total cost of gas fired boiler system (est DM 12,000)
Back-up	2000	-	2000	-	-	2500	2500	
Radiators etc	9000	9000	9000	9000	9000	9000	9000	
Total	19,000	12,200	14,000	17,000/13,000	?	26,400/-	-/20,500	
Relative Cost	1.6/-	-/1.0	-/1.2	1.4/1.1	1.4+/1.1+	2.2/-	-/1.7	First figure is present cost, second is target cost.

1) Air Source, water distribution system, 20 kW heat load at -15 °C, heat pump sized for 0 °C ambient, climate North Germany

Table 6-12: Comparison of advanced heat pumps for domestic heating

The approximate order of merit under the four main headings are given in Table 6-13.

criteria	best	middle	worst
performance	Diesel-Rankine Stirling-Rankine	absorption Otto-Rankine Rankine-Rankine resorption	electric-Rankine
design	absorption resorption Rankine-Rankine	electric-Rankine Stirling-Rankine	Diesel-Rankine Otto-Rankine
operation	absorption resorption Rankine-Rankine	electric-Rankine Stirling-Rankine	Diesel-Rankine Otto-Rankine
first cost	absorption+ Rankine-Rankine+ Stirling-Rankine+	electric-Rankine Diesel-Rankine+ resorption	Otto-Rankine
energy saving++	Diesel-Rankine Stirling-Rankine	absorption Otto-Rankine Rankine-Rankine	electric-Rankine
oil substitution++	absorption Otto-Rankine Rankine-Rankine Stirling-Rankine	electric-Rankine	Diesel-Rankine

\+ based on target costs

++ against oil fired boiler; all systems bivalent-parallel and gas-fired back-up except Diesel and electric-Rankine which have oil fired back-up; electricity from non-oil fired plant

Table 6-13: Order of merit of systems for domestic heating (from Table 6-12)

It is clear from Table 6-13 that the system with the best performance are not those with the best characteristics in the other respects. In particular the Diesel-Rankine system, with the best performance, scores badly in other respects. The external combustion systems offer the greatest potential, judged on all the aspects considered, for this application while the scope for their further development is considerable. These systems are the absorption, Rankine-Rankine and Stirling-Rankine systems, and the resorption and the Ericsson-Ericsson systems. The first three sys-

tems are at present at an advanced stage of development, though they are not due for commercialisation until 1983/1985. Much work is therefore still to be done before such systems become available. For their successful application to domestic heating the following areas have been identified as critical in their development

Absorption :
1. achieving design performance objectives
2. replacement of NH_3/H_2O by safer fluids with similar or better performance characteristics
3. reduction in size and first cost
4. development of high performance low cost solvent pumps
5. formulating of design methods for efficient generators and absorbers
6. development of control methods to give continuous output variation over a wide range with minimal reduction in performance
7. extension of application range to larger and smaller unit sizes.

Rankine-Rankine :
1. achieving design performance objectives
2. proving longevity and reliability of expander-compressor unit (turbine and free-piston units)
3. development of control methods to continuous output variation over a wide range with minimal reduction in performance
4. development of high performance low cost feed pumps
5. extension of application range to air distribution, summer cooling and larger unit sizes (smaller may not be possible)

Stirling-Rankine :
1. achieving design performance objectives
2. proving longevity and reliability of free piston expander-compressor unit

3. development of control methods to give continuous output variation over a wide range with minimal reduction in performance
4. extension of application range to water distribution and larger and smaller unit sizes.

The remaining systems (resorption and Ericsson-Ericsson) are at earlier stages of development and consequently must meet not only the relevant objectives listed above but their development also needs to be accelerated so that they are available in time to compete for the market against the other systems. In view of their potential for better performance than the other external combustion systems the acceleration of their development is considered desirable. In the context of air as a distribution medium and the possible cooling application of the systems (these two requirements are usually linked for domestic applications) the comparison contained in Table 6-12 needs to be conditioned by the relative cooling performance shown in Table 6-4 On this basis the Stirling-Rankine system shows the greatest potential, both in terms of capacity and COP_{eff}. For climates with a small cooling requirement the absorption and Rankine-Rankine systems may have some potential, but look uncompetitive with the already well established reversible electric heat pump.

6.5.2. Commercial

The trend since 1974 in the commercial market (offices, schools, leisure centres, public buildings, etc.) has been towards the use of heat pumps to replace air-conditioners and boilers. These have in the main been electric driven; the notable exceptions being for swimming pool and leisure centre heating and cooling for which Otto engine driven system have become well established. It is clear that on the basis of performance and cost the Otto and Diesel systems are well suited to swimming pool and leisure centres and also to the air-conditioning and heating of large commercial buildings,

particularly when there is a requirement for simultaneous power generation. These small combined heat and power plants, particularly Diesel engine driven ones, would appear logical for the providing of combined services for large public buildings and other building complexes. In the latter case the engine is used to generate power only and the engine waste heat is used for the heating of the main building. The power can then be used to drive electric heat pumps for heating remote buildings.

Smaller commercial buildings requiring heating (and often cooling) are usually too small to justify an engine driven system and for these the electric motor driven systems predominate. The earlier use of absorption systems for this use declined up until 1974 because of their higher capital costs and generally poor efficiency. In this case there would appear justification for the development of engine driven systems and also the external combustion systems (Brayton-, Rankine- and Stirling-Rankine) both to reduce energy consumption and to permit substitution of petroleum based fuels. The Brayton and Stirling engine driven systems are more suitable for this application because of their high cooling capacity and COP, though in northern climates the heating capacity and COP is more significant. The high noise level of most engine driven systems combined with localised pollution from oil driven systems makes the development of systems such as the kinematic Stirling-Rankine desirable for this application. The major problem with this systems is the present high first cost.

6.5.3. District Heating

In northern Europe district heating is a well established practice, often as part of a larger combined heat and power scheme. However, the majority of district heating systems are smaller than that needed to justify the investment associated with a combined heat and power plant. They therefore are based on a central hot water or steam boiler station providing heating to the neighbouring domestic, commercial and occasionally industrial premises. For fuel

most of these boilers use oil, sometimes combined with garbage incineration, and to a much lesser extent coal and natural gas. The substitution of oil by other fuels in such district heating schemes can be achieved by using gas, or by burning such less environmentally desirable fuels as coal, lignite, garbage, industrial waste etc. However, for a given heat demand a greater quantity of these fuels needs to be burnt than oil because of their lower calorific value and the lower efficiency with which they can be burnt. Further there are problems with pollution control, fuel handling and waste disposal. In the case of garbage and waste there is usually an unsufficient supply to meet the heat demand and so additional oil has still to be burnt in peak periods.

The problems described above in converting district heating schemes from oil can be substantially reduced by the use of heat pumps to meet at least a proportion of the heat load. Since direct fired large heat pumps are capable of having SPF's in the range 1.7 to 2 they can be used to reduce the energy demand of the district heating systems by 40 % to 50 %. When such systems are operated on wastes, such as garbage etc., then the energy requirement of the district heating scheme can be better matched by the supply and the associated problems reduced in scale.

A number of systems are possible

1. External combustion systems (such as sorption heat pumps and compression systems with Stirling, Brayton or Rankine drive cycles) can have a multifuel capability and can be combined with advanced burning techniques such as the fluid-bed boiler. The boiler can be capable of both powering the heat pump and providing the additional peak demand.

2. Internal combustion systems, such as Diesel and Otto engine driven compression heat pumps. These require natural gas, liquified petroleum gas, oil or more usefully heavy fuel oil, coal dust or combustible waste gases as fuel.

3. Electric motor driven compression systems. When the installation is near a condensing power station the condenser cooling water can be used directly (or indirectly from a warmed river or lake) as heat source. This in effect creates a small combined heat and power plant but with much greater flexibility of operation and requiring no modification to the power plant. Older coal burning power stations placed near city centers and which are already amortised and are low in the operating order can by this method have their useful life extended and their thermodynamic efficiency improved.

Table 6-14 lists the known district heating systems and shows a diversity of sources and fuels but with a concentration on internal combustion engine drives. Thermal outputs lie in the range 163 kW to 27 MW.

The most comprehensive study of heat pumps for district heating /133/ has shown that the heavy fuel oil Diesel engine driven system has the greatest fuel saving potential and best economic prospects when replacing a boiler using the same fuel. The most economic size of heat pump is with thermal outputs in the range 5 MW to 20 MW. Below 2.5 MW heavy fuel oil cannot be used while above 40 MW it is more economic to use coal fired combined heat and power plant.

The weakness of using Diesel engines for district heating heat pumps is that, although there can be a 50 % reduction in oil consumption, there is still a dependance on imported petroleum products. Dual-fuel operation (e.g. gas and oil) would tend to alleviate this weakness, but results in greater system complication. The Diesel engine driven heat pump for district heating would therefore suffer from the possible future oil price inflation (relative to other fuels) and possible shortages of fuel due to political factors. The gas engine driven systems, though less efficient, would not suffer this problem to the same extent especially when

Country	Fuel	Drive	heat Pump	Source	T_s (°C)	Thermal output (MW)	COP^*_{eff}	D.H. scheme	T_H (°C)	Back-up	Stage
Denmark	fuel oil	Diesel	compression	sewage	+10 to +16	10.2	2	new	85	oil boiler	construction
Denmark	Diesel oil	Diesel	compression	horiz.ground	+ 2 to +16	0.4	1.6	existing	45/?	garbage boiler (+oil)	construction
Germany	mine gas	Diesel or Otto	compression	coalmine cooling	+20	25	1.3	existing	90	oil boiler	planning
Germany	coke gas	steam	absorption	waste heat	+40 to +60	3.0	1.3	existing	90	oil boiler	construction
Japan	kerosene	-	absorption	waste water	+30 to +60	8.75	1.3	not known	90/150	oil boiler	proposed
Japan	electricity	electric motor	comp/abs.	waste water	+30 to +60	17.4	0.9	not known	90/150	oil boiler	proposed
Netherlands	natural gas	Otto	compression	ground water	+10	0.163	2	new	40	gas boiler	construction
Norway	electricity	electric motor	compression	sea water	+ 5 to + 6	27	3.0	new	55/75	oil boiler	proposed
Sweden	Diesel oil	Diesel	compression	air	-25 to +20	0.816	1.4	existing	80	oil boiler	planned
Switzerland	wood gas	Otto	compression	air, solar	-16 to +16	~ 0.25	not known	new	90	oil boiler	proposed
Switzerland	natural gas	Otto	compression	lake water	+ 3 to +15	0.861	1.5	existing	76	oil boiler	construction

* heat pump only, primary energy related

Table 6-14 : Existing or proposed heat pump district heating schemes

locally produced gas is available. However, no fuel substitution is possible with such systems, making them vulnerable over their projected lifespan (15-20 years) to fuel price inflation and shortages. The external combustion systems, which can be designed as multifuel or can be later adapted, could possibly be alternatives. Gas turbines (Brayton cycle) cannot be operated successfully on coal and so the most hopeful systems from this aspect would appear at present to be multistage sorption systems, Stirling-Rankine and Rankine-Rankine systems. For the latter steam can be used for the power cycle, though this would be only practical for large systems for which combined heat and power would be more likely to be economically attractive. For smaller systems organic fluids are possible, but this results in lower drive cycle efficiency and larger heat exchangers than for steam. Stirling engines large enough for district heating applications are not available, though the kinematic Stirling engine has the potential advantages of high efficiency, reliability, multi-fuel capability and low noise. Thus heat pumps for district heating can be ranked (Table 6.15.) in order of merit for performance (i.e. COP_{eff} based on existing district heating distribution temperatures of +80/+90°C and source temperatures of +10/+20°C and thermal outputs in the range 400 kW to 1 MW); controllability, first cost, multifuel capability, energy saving potential and oil substitution. A more detailed comparison is not at present possible, since at present only Diesel, Otto and absorption systems have been considered for this application. In addition, a detailed comparison has also to be based on the characteristics of existing or planned district heating schemes. For example, new schemes could be based on water distribution temperatures of +40/+50°C so that a monovalent heat pump with floor warming can be used. Alternatively, in new or existing schemes, bivalent-parallel operation can be utilised to give the higher normal distribution temperatures at peak periods. In these circumstances the advanced systems, e.g. sorption, Rankine-Rankine and Stirling-Rankine, may be considered. Since these have a multifuel capability the possibility would then exist to base new district heating systems on heat pumps to both save energy and avoid use of

petroleum based fuels or natural gas.

criteria	best	middle	worst
performance+	Diesel-Rankine	Otto-Rankine Stirling-Rankine	absorption Brayton-Rankine Rankine-Rankine
controlla-bility	absorption Diesel-Rankine Otto-Rankine Stirling-Rankine	Brayton-Rankine	Rankine-Rankine
first cost	Diesel-Rankine Otto-Rankine	absorption Brayton-Rankine Rankine-Rankine	Stirling-Rankine
multifuel capability	absorption Rankine-Rankine Stirling-Rankine	Brayton-Rankine Diesel-Rankine	Otto-Rankine
energy saving++	Diesel-Rankine	Otto-Rankine Stirling-Rankine	absorption Rankine-Rankine Brayton-Rankine
oil sub-stitution++	absorption Brayton-Rankine Otto-Rankine Rankine-Rankine Stirling-Rankine	electric-Rankine	Diesel-Rankine

\+ for water distribution temperature +80/+90°C, source temperature +10/+20°C.

++ see Table 6-13 for assumptions.

Table 6-15: Ranking of heat pump systems for district heating

6.5.4. Industrial

The assessment of the potential of the various advanced heat pumps in industry is made difficult by the diversity of possible applications. However, there are a number of main areas of application which have been identified and characterised, and for some of these electric heat pumps have been developed. From this characterisation the most suitable advanced heat pumps can be identified.

The largest potential markets for heat pumps have previously been identified as heat recovery from refrigeration and cooling plant for space or water heating, the coupling of heating and cooling processes within the same plant, and drying. Since refrigeration systems generally use electric motor drives, there is little potential market in this application for advanced heat pumps (which are also characterised by a much higher heating capacity than cooling capacity). Simultaneous heating and cooling is an extremely diverse market in which it is not possible to identify potential applications for standard equipment and so each application tends to require an individually designed piece of equipment. At present electric-Rankine systems are being used to couple together processes where the heat requirement is below 70°C, and sometimes using R114 as work fluid for up to 100°C. The major advantage in the possible use of direct fired systems for these applications would be the higher performance (COP_{eff}) available (over the same temperature difference as the electric-Rankine systems) or the extension of the temperature range of the heat recovered to 80/120°C.

However, the distinguishing characteristics of most industrial applications (over those in the commercial and domestic areas) are the longer operating hours (2000 to 8000 p.a.),the necessity for high reliability and low maintenance, and usually the ability to operate in a dirty environment. Under these aspects the most efficient systems (Diesel-Rankine and Otto-Rankine) have the worst characteristics, while the inherently most reliable (the absorption system) is limited with present working pairs to operate with about

90°C condensing temperature. Research and development into the other systems has not even begun.

The usual requirement is to cool or to recover heat from processes in the temperature range 30°C to 80°C and to provide hot water at 80°C to 120°C or low pressure steam at 100°C to 140°C (1 to 3.5 bar). The cooling water heat from Diesel or Otto engines cannot be recovered at the upper end of this temperature range so their efficiency is considerably reduced. The only systems that would appear feasible for these applications would be the sorption (with multistaging and new working pairs), the Rankine-Rankine, Brayton-Rankine and Stirling-Rankine systems.

An aspect of heat recovery in industry, which applies to heat pumps as well as other possible systems, is the fouling of the heat exchangers (usually the evaporator) by the contaminated liquors or exhaust air which are used as heat source.

Convective drying in industry is carried out with temperatures in the range 40°C to 400°C, with the majority of applications in the range 80°C to 200°C. For the lower end of this range (up to 100°C) the engine driven systems would appear most attractive (i.e. Diesel and Otto), particularly for larger applications with continuous operation /107/. At higher temperatures there are three possibilities, external combustion driven- Rankine systems, the Brayton-Joule or electric-Joule system (the heat pump side using the dryer exhaust air as working fluid) or replacing the dryer airstream by steam. The latter solution is already being pursued with electric drives /91/ while the electric-Joule system has been proposed by several workers but has not yet been fully explored for this application /122, 123, 124/.

Summarising, the industrial applications for advanced heat pumps (including electric drives) would appear to lie in the area of heat recovery, the coupling of simultaneous processes and convective drying. All these applications require the development of

suitable work fluids, processes and equipment to allow operation at higher temperatures with high performance and reliability and often with contaminated heat sources.

7. Conclusions and R+D Recommendations

7.1. General

The technology survey has shown that in the 13 participating countries there is a large and extremely diverse R+D programme covering most of the possible systems. Some degree of overlap has been found, and although this may in certain circumstances be wasteful it is generally more likely to result in healthy competition to develop successful products. The present situation of heat pumps is that, following the stimulus of the first and certainly not last energy crisis of 1973, of a technology emerging from many years of neglect. Certain aspects of this crisis, recently re-emphasised by a further escalation in oil prices, the response of the participating countries and the present state of heat pump development form the background to the major R+D recommendations. These are -

(1) The continuing dependance on petroleum products, mainly light oil, for the heating of buildings in the participating countries. This is particularly significant for Belgium, Canada, Denmark, Germany, Italy, Sweden and Switzerland, for which countries oil is used for about one half or over the domestic and commercial heating requirements.

(2) The predominant position of electric heat pumps (for both heating and cooling) in the U.S. as replacement for fossil fuel fired boilers or furnaces. The situation in W. Germany is also developing in this direction because gas and oil fired systems are not fully commercialised and the market is being aggressively attacked by the electric heat pump manufacturers and utilities.

(3) The first priority is at present to substitute for oil and the second priority is the conservation of all forms of energy. The electric heat pump as presently available and promoted meets the first priority but only contributes to energy conservation when compared to electric heating. The development of gas heat pumps can be attributed to both priorities, but

dependance on gas could result in similar pressures as those in the oil market.

(4) Most advanced heat pumps, with the present development programs, are not due to commercialisation until 1985 at the earliest. Since they cannot be expected to make a significant contribution rapidly, the possibility of achieving worthwhile energy saving before 1990 appears low. By this time the energy supply situation could have changed dramatically (viz., the decade to 1980). The acceleration of the development programs of the systems with greatest potential for each application is desirable, even if in the short term their use would not be justifiable solely on economic grounds.

(5) All the advanced heat pumps appear capable of conserving between 30 % and 50 % energy. The best systems from this aspect are the internal combustion engine driven ones.Many are capable of operation on either liquid or gaseous fuels while the external combustion systems have total flexibility of fuel use, particularly in the larger unit sizes.

(6) There are systems under development for most applications. However, there appear to be no systems under development for the smallest sizes (3-4 kW - suitable for single room heating, small well insulated houses or houses in mild climates) and insufficient activity to develop systems for the industrial area.

(7) All air source heat pumps suffer from the disadvantage of declining efficiency towards peak heating demand. The peak demand imposed by the use of such systems, either monovalently or bivalently, will also restrict their use unless energy can be stored for the peak demand. This can be done by storage of energy as fuel (i.e. using an oil or LPG[+] fired boiler as back-up), as heat (hot water or other store) as chemical or latent energy. There is therefore a requirement for the development of cost effective storage systems. These could also be used to avoid low efficiency operation of systems on partload or render unnecessary sophisticated control systems.

[+] Liquified Petroleum Gas

(8) There is at present no international standard for performance for heat pumps. Two countries (U.S. and Germany) have national standards and these are completely different. There is a pressing need for uniform standards for performance and also for definitions of terms and symbols. A further requirement is for some sort of code of practice for advertising and promotion to prevent the market for heat pumps being spoilt by misleading claims or unscrupulous promoters.

(9) The reliability, life-time, service and maintenance of advanced heat pumps will in most cases prove troublesome aspects in their initial years of commercialisation. The provision of suitable service and maintenance facilities and the guarantee of installations during the acceptance phase are essential factors in their acceptability to the potential user. The use of pilot installations and close monitoring of installations during this phase will assist in the controlled and orderly growth of the market and the necessary infrastructure.

(10) The capital costs of the advanced systems in general are still high compared with the conventional boiler or furnace costs. The reduction of first cost, a major factor influencing choice, can be attained by specific R+D activities, by good design and production in large quantities.

(11) There exists a diversity of financial, fiscal and other incentives to the development and use of energy conserving technologies, including heat pumps, in the participating countries. The effectiveness of these policies and possible alternatives in promoting the objectives of substitution for oil and conserving energy needs investigation. The comparison of the various methods should enable the participating countries to choose the most cost effective methods of achieving their objectives.

7.2. R+D Needs

There have been identified a large number of R+D needs which would assist in the commercial realisation of those advanced heat pumps which appear best suited to the various applications, and to overcome disadvantages and to strengthen those systems which at present are less attractive or at an early stage of development. These R+D needs could form part of the programs of work of those already developing these systems, of national or utility research, while some are particularly suitable for international co-operation and are more fully described in the next section.

The R+D needs have been classified by system type and are given in Table 7.1. These are not listed by priority since many have been integrated into the projects suggested as suitable for international co-operation in Section 7.3. The remaining topics mainly apply to systems under development and could be incorporated in the existing work programmes or, where appropriate as part of national R+D programmes.

Sorption

Research	Development	Demonstration
• Search for new safe fluids for small fossil fuel driven units • Search for new safe fluids for high temperature industrial applications • Collection and publication of all available data on previously considered fluids • Investigation of the boosted *) absorption cycle's potential for district heating • Computer modelling of absorbers and expellers for organic and novel fluids • Computer modelling of sorption cycles for different fluids, aiming at predicting the performance of given concepts and developing new ones • Investigation of safety requirements regarding domestic use of ammonia • Investigation of alternative sorption cycles e.g. resorption and Altenkirch cycles, multistaging, to achieve better performance • Theoretical and experimental study of refrigerant mixtures in sorption systems • Fire testing of organic fluids with respect to explosivity, inflammability and formation of physiologically dangerous compounds through pyrolysis	• Design of compact, low noise and high efficiency solution pump for organic fluids • Design of high efficiency generators • Design of an organic pair, solar space cooling unit • Design of a combined heat pump/storage system to meet peak demand • Design of small reversible units to replace electric window air-conditioners • Development of sorption heat pumps with storage function (heat of reaction/dilution)	• Demonstration and comparison of prototype sorption heat pumps (in the range of 10 to 20 kW thermal output) for single family houses (see external combustion) • Demonstration of medium sized sorption units for multifamily house heating

*) Compressor between evaporator and absorber

Table 7-1: R+D Recommendations

Electric heat pumps

Research	Development	Demonstration
• Study methods of improving performance of air source heat pumps below +3°C to overcome utility restrictions to bivalent-parallel operation • R+D on short to medium term duration heat storage to supplement heat pump output at peak load conditions • Study of Lorentz cycle systems for domestic heat pumping • Investigation of methods to reduce auxiliary power requirements e.g. fans and pumps	• Development of high efficiency controllable motor-compressor units of small unit size • Development of third generation high efficiency, controllable, lower cost heat pumps for space heating only • Introduction of higher national performance standards for air-conditioners and heat pumps • Development of self defrosting evaporators for air source systems • Electronic control systems • Development of low cost plastic radiator and piping systems for low temperature water distribution systems	• Demonstration of best heat pump technology for single family house heating

Table 7-1: R+D Recommendations

Internal combustion driven

Research	Development	Demonstration
• Investigation of the possibilities of improving recip. compressor efficiency and controllability • Investigation of alternative compressor types for small engine driven systems • Investigation into control methods to achieve high efficiency output regulation, and application of microprocessor control • Investigation of free piston and rotary engine/compressor systems for small units ($<$30 kW output) • Study of possible methods of increasing service life and reliability of internal combustion engines for heat pump drives • Study on local pollution and noise produced by small engine systems • Recommendations for countermeasures and design practices to meet building regulations	• Design and construction of integrated engine/compressor units (10 to 20 kW output) • Development of methods to avoid soot formation or to remove soot from exhaust gas coolers of Diesel units • Development of integrated engine heat recovery packages • Development of electronic control systems for optimum performance and life of units • Development of peak heat load shaving devices (e.g. thermal stores, short term performance boosting) to avoid need for back-up boilers	• Operation of gas engine driven heat pumps on alternative gases (SNG, mine gas, town gas, biogas) • Experimental comparison of performance of internal combustion engine driven heat pumps (10 to 20 kW) • Monitoring of reliability, service and maintenance requirements of existing internal combustion engine driven systems to identify best practices and R+D requirements • Demonstration of engine driven systems for power generation and heat supply for small communities: the so-called 'Blockheizkraftwerke' (Block heating and power centres)

Table 7-1: R+D Recommendations

External combustion driven

Research	Development	Demonstration
• Investigation of suitability of external combustion systems for higher temperature applications e.g. district heating, industrial applications. • Investigation of solid fuel fired external combustion systems for medium and large applications • R+D to produce a design method (computer based) for ejectors for heat pump drives (also for sorption units) • Assessment of free piston units for small heating applications • Study of control problems and off design point performance of Rankine-Rankine systems and identify best control philosophy • Investigation of alternative heat pump cycles for external drives (Joule, Edwards, Lorentz, Resorption) • Computer modelling of solar activated systems for optimisation	• Design and development of kinematic Stirling-Rankine cycle system for medium size applications (100-400 kW thermal output) • Development of larger sized single fluid Rankine-Rankine systems • Development of Brayton and Stirling systems for combined heat and power (for heat pump drive) units for small communities • Development of high efficiency low cost feed pumps for Rankine-Rankine systems	• Demonstration and comparison of alternative systems (Rankine-Rankine, Stirling-Rankine and Ejector) for single family house heating (see sorption) • Demonstration of combined heating/cooling systems (Stirling-Rankine, Brayton-Rankine and Rankine-Rankine) for commercial building air-conditioning • Demonstration of external combustion systems for industrial applications

Table 7-1: R+D Recommendations

General

Research	Development	Demonstration
. Investigation of the fundamental problems of vertical ground sources (geology, heat transfer, heat capacity, mech. effects) . Study on the integration of large heat pump systems in district heating schemes . Evaluation of fluid mixture heat pumps to approximate the Lorenz cycle and achieve high efficiency . Assessment of the possibilities of using coal and wastes in external heat pump combustors of both sorption and vapour compression systems . Investigation of air pollution impacts generated by local exhausting of relatively cold exhaust gases . Assessment of the combined cycles' potential for district heating . Assessment of heat sources' potential for large heat pump systems . Impact study on effect of extensive use of heat pump technology on resources, environment, productive capacity,service infrastructure etc. . Study of effects of various financial, fiscal and other subsidies on heat pump development and use	. Computer modelling of vertical ground source with respect to optimisation of geometry . International standardisation of heat pump systems and testing methods . Development of concepts for large scale waste heat usage: e.g. transport of low temperature waste heat carrying water to district heating heat pumps . Development of models for the optimisation of heat pumps + improved thermal building insulation . Development of small capacity controlled high efficiency compressors . Development of low cost solar roofs as heat sources . Design of low cost and corrosion proof exhaust gas coolers for operation below the dew point . Development of small air to air heat pumps for well insulated houses using exhaust air as source . Development of high efficiency heat pumps for industrial heat recovery and drying	. Field testing of vertical ground source heat pumps (10 to 20 kW): a) electric drive b) comparison of use with on- and off-site activated heat pumps . Application of low temperature large scale solar ponds for urban heating with on-site activated heat pumps (MW-range) . Establishment of central test facility for proving of different heat pump systems (3 to 20 kW) . Field testing of solar source heat pumps (10 to 20 kW)

Table 7-1: R+D Recommendations

7.3. Suggested R+D Programme

The topics which have been identified as suitable for international co-operation within the Advanced Heat Pump Study agreement of the IEA are

1. Vertical earth heat pump systems
2. Development of low cost sorption heat pump systems
3. Development of heat activated drives for heat pumps
4. Integration of heat pumps into district heating schemes
5. Advanced heat source equipment
6. Establishment of a heat pump centre
7. Applications of heat pumps in industry

For each of these topics an Annex to the Implementing Agreement has been drafted (item 1 by Sweden and item 7 by Belgium).

7.3.1. Heat pumps with vertical soil heat source systems
(Excerpt of a draft by T. Boström)

a) Introduction

The vertical type earth heat pump is designed in order to get

- high capacity (heat power) during the high load period
- high value of the coefficient of performance, COP and/or SPF
- less need for land area than the horizontal type earth heat pump

The investment costs seem today to be high and the operating costs relatively low. It is therefore very important to make the investments in an optimal way from a technical and economical point of view. Not only the soil pipe system but also the other parts of the system must be designed properly. The heat pump itself does not need much more development why the R+D-work can be concentrated on

- subsoil accumulator system
- solar or convective heat collector.

Energy and power demand

The maximum power demand for space heating varies with the ambient temperature and it is typical that the duration of the peak load is very short. The power demand for domestic water heating varies from day to day but the consumption per week is normally very constant. The domestic water heating causes a typical base load on a large hot water accumulator included in the heat pump plant. This is much more important when using heat pumps than e.g. oil fired boilers.

Capacity and COP

One must consider the combination of the heating demand and the COP-curve if the result shall be useful and show anything about the real performance data and economy.

With ambient air as heat source it is normal that the heat pump is not running during the coldest part of the winter. The "earth heat pump" can be designed for the peak load and at the same to give higher evaporating temperatures.

Another advantage with high evaporation temperatures is the increase in capacity or heat output of a specific plant. If the evaporating temperature can be increased by about 10 K by using a soil heat accumulator the output will increase by 35 to 40 %.

If one keeps the evaporating temperature high during the winter the heating capacity of a specific heat pump (compressor) will be higher, the seasonal performance factor higher and the drive energy per year lower. In other words

it is a method of energy conservation but the extra saved kWh's and kW's must pay for the additional cost of the accumulator and other additional equipment needed.

On the other hand the soil heat pump can be designed for the peak load, no back-up systems is needed, the demand for land area is relatively small and simple low temperature solar or air heat collectors can be used.

b) The project could be divided into the following tasks:

1. On-going projects in the field of earth heat pumps

National teams report to an Operating Agent about technical and economical experiences reached so far for different types of earth heat pumps in their countries.

National teams should report known or estimated costs for different parts of an earth heat pump, especially those for the heat storage system, e.g. drilling costs, and for the solar heat collectors. Available or planned computer programs for simulation of different parts should also be reported.

2. Agreement on specific earth heat pump profiles which are to be studied in the annex

Specific profiles, on the order of 5 - 10, for detailed investigation should be agreed upon. In these profiles different ways of using the earth for heat storage and different solar collectors and air batteries for recharging the storage should be included.

3. Basic technical and economical conditions

One important technical condition is the access to land areas with suitable types of soil near the building stock. Rough estimates of the potential for the different profiles agreed upon, with respect to this technical condition should be made by the national teams. Economic estimates concerning initial and operating costs for the profiles should also be made. Hereby the reported experiences about the economic conditions in item 1 could be used.

With the aid of the technical and economical conditions rough estimates of the potential in each country will be made. Hereby the interesting profiles for each country can be established. Furthermore, any profile uninteresting for all countries could be excluded from the study at an early stage of the project.

4. Full-scale research plants

For such complex thermodynamic systems as earth heat pumps experimental investigations are essential for increasing the knowledge of both technical and economical aspects of the system. Therefore measurements on and evaluation of several research plants will be included in the annex. One or more plants could be co-projects between the nations.

5. Measurements on and evaluation of the full-scale research plants

In order to make the measurements on and evaluation of the different plants comparable with each other it is important that the measure-

ments are made uniformly and detailed enough. Therefore the countries should agree upon a common way of doing these measurements.

Such an international agreement should be of great value also in other research projects in this and related fields. It should to a high extent increase the possibilities of making meaningful comparisons of research results from different countries.

6. Computer programs

The technical results from the research plants must be possible to transfer to other climatic conditions, other types of soil, other dimensionings of the different parts of the systems etc. For these types of calculations mathematical models in the form of computer programs must be used. With such programs it is also possible to work out "thumb rules" for the dimensioning of the earth storage and the other parts in the system at various conditions.

If one wants to make earth heat pumps commercially available it is necessary to have tools for making appropriate designs of the storage volumes at various conditions. For this reason reliable computer programs are essential. There exist already computer programs and several are under development for the temperature gradients in an earth storage system when heat is put into and taken out of it. Such a system is very complex to model. Hence, all the programs have rather great approximations in one way or another. The results from the uniformly made measurements on the research plants, according to item 4 and 5, provide a mean for testing such programs at various conditions. Hereby it would be revealed what approximations that are appropriate and, above all, what parameters, e.g. composition of the soil, water content, distance between tubes, temperature level, that are important for the design of the heat storage system.

Computer programs for the heat pump and for the solar collector/

air battery system could also be tested with the aid of the results from the research plants.

7. Technical and economical evaluation of the project

With the aid of the results from items 4 - 6 a more reliable estimate of the potential for different heat pump systems than the one according to item 3 will be made. "Thumb rules" for the design of different systems will be established.

7.3.2. Development of low cost sorption heat pump systems

a) Objectives and Definitions

1. Objective

The objective of this task is to encourage the rapid development of sorption heat pump systems for single family house heating by the establishment of a design, performance and cost specification against which industry, supported as necessary by laboratories and universities, can tender for a design study followed by the construction and testing of prototypes suitable for series production in large quantities.

2. Definitions

The heat pump systems included in the task would be

1. those acting on the principles of sorption and resorption of a condensible vapour by a liquid
2. employing single or multistage absorption or resorption
3. using a non-classical working pair i.e. not NH_3/H_2O or $H_2O/LiBr$
4. using natural gas as fuel
5. using ambient air as heat source
6. using hot water as heat distribution medium
7. being for both central heating and domestic hot water or for central heating only

8. capable of operating as a direct hot water heater, or as combined heat pump and direct water heater or including within the same unit a separate hot water heater to meet the maximum heat demand.

Single family houses to be defined as of houses with

1. maximum heat demands for central heating and domestic hot water of between 10 and 20 kW
2. average heat demand of at least 50 % of the maximum to be met by the heat pump only.

b) Scope

1. System Definition and Request for Tenders

Based on the information collected in Annex I and published in this final report on the present status of sorption heat pumps and the potential market for them a request for tenders would be prepared and issued to the participating countries. This would contain the following information

1. the projected market for the proposed system
2. the performance and capital cost objectives
3. the design requirements i.e. maximum dimensions and weight, national and international standards, noise levels etc.
4. the operating principles and restrictions on possible working pairs
5. the characteristics of the application, heat load etc.
6. the heat source and its characteristics
7. the heat distribution method and requirements
8. the fuel characteristics
9. requirements for the back up system
10. requirements for controls, safety etc.
11. test procedures to be followed.

2. Design Study

From the tenders received a suitable number of contractors will be selected to undertake the design study phase. This will comprise

1. selection of working pair and operating cycle
2. measurement and computation of fluid properties, if necessary
3. calculation of performance and conditions prevailing throughout the cycle for the complete operating range
4. design concepts for all the system components
5. estimation of size and weight of the system
6. estimation of system first cost in series production
7. assessment of safety, noise and environmental factors

3. Prototype Construction and Proving

On the basis of the design studies a small number of systems would be selected for the construction of prototypes. This would entail

1. detail design of the complete system
2. construction of a small number of prototypes of each system
3. proving under standard conditions for performance, safety and reliability using agreed methods

4. Field Evaluation

The results of 3. would be used to choose the system or systems for which a number of pilot production models would be commissioned for installation in the participating countries for evaluation of

1. assessment of seasonal performance, energy saving and cost effectiveness
2. assessment of consumer acceptability, controllability etc.
3. assessment of reliability and provision of service and maintenance facilities

4. from point 1. to 3. prove the applicability of the systems to the anticipated market

7.3.3. Development of heat activated drives for heat pumps

a) Objectives and Definitions

1. Objective

The objective of this task is to encourage the introduction of high efficiency heat activated drives for heat pumps using fuels, or other sources of heat, which are not based on petroleum products, by establishing international cooperation on the development of combustion techniques, prime movers and integrated heat pump units suitable for a range of applications.

2. Definitions

The drive systems included in this task would be

- Those producing mechanical work by the input of heat, that is using thermodynamic cycles such as the Rankine, Stirling, Brayton and Ericsson cycles, and rejecting heat in a form and at a temperature so that it can be utilised in the heat pump unit. The heat pump cycles included in this task would be those requiring mechanical work as input, i.e. using similar thermodynamic cycles as the drive systems.

The heat inputs to be included in the task would be

1. fossil fuels other than petroleum based ones i.e. natural gas, coal and its derivatives
2. unconventional fuels such as biogas, biomass, wastes etc.
3. solar radiation
4. combinations of 1. with 2. or 3.

The applications to be considered in this task would be

1. air-to-water or air-to-air, heating only, units with about 5 kW maximum thermal output, suitable for small, well insulated, single family houses,
2. air-to-water, heating only, units with thermal outputs in the range 25 to 350 kW, suitable for heating multi-family houses and commercial buildings,
3. air-to-air, reversible units with thermal outputs in the range 25 to 350 kW (heating) suitable for commercial building air conditioning,
4. solar-driven, air-to-air or air-to-water, reversible units suitable for single family houses, shops and small commercial building heating and cooling,
5. waste heat source systems, with waste heat or fuel drives for industrial applications, such as steam raising or high pressure water heating, with large thermal outputs (> 250 kW)

b) Scope

1. Technology Study

1. Assessment of international state of the art technology from Annex I
2. Survey of competitive technology for the applications listed in a)2.
3. Survey of all the available fuels, their characteristics, combustion techniques and necessary antipollution measures
4. Survey of other related technologies, such as organic power cycle development, for possible spin off
5. Collection of characteristics and operating experiences with existing heat pump plants and alternative installations
6. Summary of basic data relevant to the design of heat activated heat pumps for the applications listed in a)2.
7. Development of the requirements for systems suitable for each application, including the performance, first cost, fuel flexi-

bility etc., in accordance with appendices 1 und 2.

8. Evaluation of all possible systems, using the data collected in 1. 1 to 7 to identify those which show promise for each application and which are currently not under development or need supporting R+D.

2. Market Study

1. Establish for each application the total potential market, using as appropriate the results of Annex I.
2. Identify the availability of non-petroleum fuels, their location and probable price range.
3. Assessment of the technical and other barriers which result from the use of each type of fuel for each application with reference to the conceivable market for each application
4. Assessment of the environmental barriers with reference to the conceivable market for each application
5. Assessment of the legal and institutional barriers for each fuel and system type with regard to the conceivable market potential for each application
6. Assessment of the conceivable market potential and general applicability by application, system type and fuel.

3. Development of an evaluation methodology

1. Analysis and choice of relevant parameters for the evaluation of the environmental social and other non-technical impacts of the use of heat activated heat pumps for these applications.
2. Analysis and choice of relevant parameters for the evaluation of the thermal characteristics of heat activated heat pumps for these applications.

4. Construction and evaluation of these heat pump plants

7.3.4. Integration of large heat pumps into district heating schemes

a) Objectives and Definitions

1. Objectives

The objectives of this task are

- to collect and evaluate data obtained by internationsl experience with large heat pump systems of different types and of components suitable for them
- to assess the suitability and availability of different heat sources for them
- to investigate the problems associated with recovering heat from these sources
- to assess the impact of the use of such heat pumps in existing and proposed district heating schemes
- the capability of such heat pumps to operate on nonconventional fuels and measures to reduce pollution etc. from them
- to assess the potential for such systems.

2. Definitions

Heat pump systems to be included in the task are

1. Thermal output greater than 400 kW
2. Using all possible thermodynamic cycles, combinations and multi stage systems
3. Using all possible drive systems
4. Using all possible fuels

District heating schemes included in the study are

1. Existing heat distribution only schemes for all purposes and all normal heat distribution temperatures
2. Existing combined heat and power schemes for all purposes and

normal heat distribution temperatures

3. Proposed schemes with normal and below normal ($<80^{\circ}C$) distribution temperatures.

Fuels to be included in the study are

1. Conventional fuels such as oil, gas, electricity
2. Unconventional fuels such as biogas, mine gas, wood, peat, coal, lignite, garbage, industrial solid, liquid and gaseous wastes.

Sources to be included in the study are

1. Surface water, sea water, ground water and geothermal heat
2. Industrial and power station waste heat, sewage and other waste waters.

b) Scope

1. Technical Approach (see Fig. 7-1)

1. Derivation of a detailed technical approach and methodology

2. Background Data

1. Collection on data on the state of the art in district heating, large heat pumps, sources and fuels
2. Collection of data on existing heat pump district heating schemes including characteristics and operating data
3. Identification of possible locations for demonstration projects utilising novel sources, fuels or heat pump techniques.

3. Case Study Selection

1. Selection of existing schemes and proposed schemes as case studies
2. Identification of work areas for detailed experimental and theoretical investigation

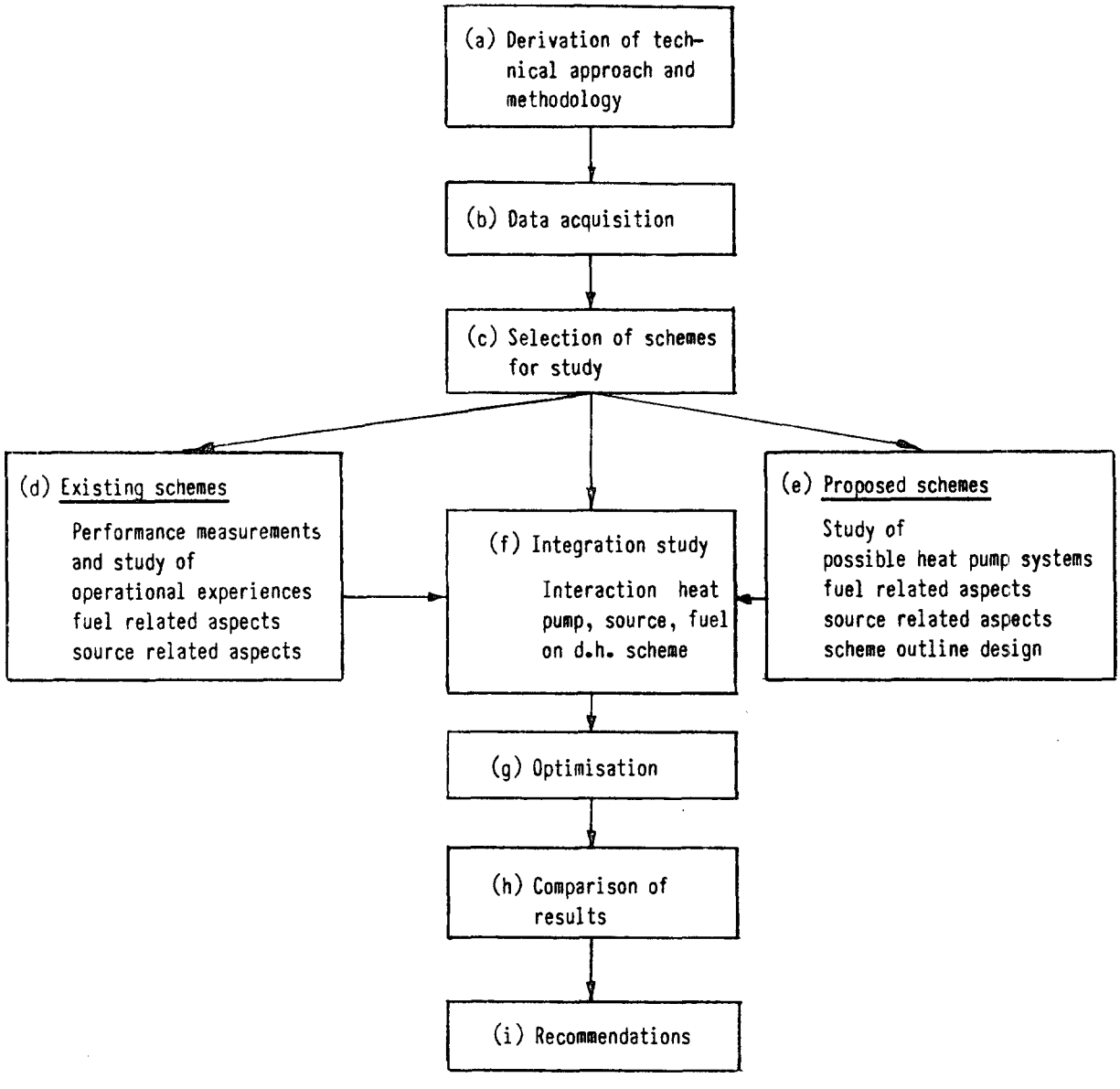

Fig. 7-1: Proposed outline technical approach

4. Case Studies: Existing Systems

1. For existing systems collection and analysis of performance data over a complete heating system
2. Standardisation of data to average heating season conditions for an agreed location
3. Collection of data on the heat pump operation, for such aspects as control, reliability, service and maintenance and corrosion of heat exchangers
4. Collection of data on fuel use, its availability and variability and pollution
5. Analysis of source availability and variability, corrosion and fouling of heat exchangers.

5. Case Studies: Proposed Schemes

1. For proposed systems collection of data on the possible types of heat pumps that could be used, their performance, cost, flexibility of fuel use, life time, service, reliability etc.
2. Survey of available fuels, their availablility, investigation of suitable combustion techniques, pollution control and waste disposal
3. Identification of suitable sources and their characteristics, assessment designs and materials, possible environmental effects.

6. Integration of Heat Pumps into District Heating Schemes

1. Study of the interaction of the head load, source, fuel, heat pump and back-up boiler
2. Characteristics on the performance and economics of heat pump district heating schemes
3. Development of optimisation techniques.

7. Optimisation of Proposed Schemes

1. Optimisation study for each of the proposed schemes to obtain the most economic system for each.
2. Specification of optimum type of heat pump and size relative to load, optimum distribution temperatures, method of capacity

control etc.

8. Analysis and comparison

1. Analysis and comparison of suitability of the various heat pump types, fuels and sources for district heating
2. Energy saving potential of the use of heat pumps in district heating
3. Reliability, life, service and maintenance requirements of systems. Potential market for systems.

9. Recommendations

1. Recommendations on which types of heat pumps are most suitable for use in district heating with regard to fuel, source and district heating system characteristics
2. Recommendations on heat exchanger design and material selection for each source type
3. Recommendations on principles on which heat pump district heating systems should be designed
4. Recommended locations and system types for demonstration projects
5. Design specifications for demonstration schemes. Test procedures for the demonstration schemes.

7.3.5. Advanced Heat Source Equipment

a) Objective and Scope

Development of hardware components for using latent heat as a source for heat pumps, i.e. water-to-ice systems.
This activity should preferably be aimed at large size installations located near surface water of low winter temperatures that would not offer an attractive ΔT potential for solely sensible heat utilisation.

Two different principles may be possible:

- phase change taking place in the water reservoir, i.e. brine or solution would carry the heat picked up to the evaporator

- phase change being established at the heat pump installation, requiring transport of water to the heat pump and water/ice slurry back.

In both cases it would be necessary to provide de-icing equipment for the heat exchanger surfaces or instal two parallel source subsystems to work alternatingly, e.g. two subsurface sea heat exchangers one of which picks up phase change heat whilst the other one is de-iced by the surrounding water, making use of natural convection, sea movement and salt diffusion.

It is obvious that both the provision of de-icing equipment and the redundancy (in case of parallel source subsystems) would call for the application of non-sophisticated technology in order to achieve acceptable first costs.

b) Approach

The project should commence with an assessment of available heat sources, including

- identification of possible geographical locations in the context of settlement structures (space heating demand)

- judgement of the environmental feasibility of such systems based on thermal and biological source data

- estimate of the energy saving potential

This should be followed by a conceptual design phase which allows to judge the economics and provides a crude hardware specification, which is then used to ask industry for tenders on a demonstration unit. The specification should be sufficiently defined in order to enable a systematic comparison of different bids and to choose the optimal one, but it should also give industry the freedom to bring in new design or conceptual ideas.

Depending on the final choice of an industrial contractor based on criteria such as technology applied, price, expertise, location of contractor etc. the location of the demonstration unit can be chosen.

After construction a testing program of at least two years should follow, during which measurements on the whole plant are taken, accompanied by investigations into biological effects caused by the source equipment, and into the problems of heat supply to buildings.

c) Results

The aim of the test phase should be primarily to prove the energy saving potential and ecnomics of large size heat pumps connected to this type of source, and secondly to improve the state of the art as far as use of heat pumps as heat centres or for district heating is concerned.

All of this, however, is also linked to the choice of the type of heat pump cycle, which, if of an "advanced" type offers the possibility to include detailed heat pump cycle and drive testing in addition to investigations on the source equipment and its overall impact on the system performance and economics.

7.3.6. Establishment of a heat pump centre

a) Objective and scope

Since it has been found that the enhancement of heat pump technology requires international coordination and initiatives on the R+D side, it appears sensible to investigate the possibilities and potential benefits which a socalled "Heat Pump Center" could bring within the efforts of a group of IEA countries in energy conservation.

In particular the Advanced Heat Pumps Annex I project has illustrated that specifically in the area of standards, terms, definitions and methodologies there is lack of uniformity and understanding throughout the participating countries, which often makes a direct comparison of international information difficult.

It is therefore felt that a prestudy should be initiated, which is aimed at both elaborating an IEA standard methodology for the evaluation of different types of heat pumps and to develop the profile of an anticipated heat pump center which would implement the methodology and improve the international coordination, also extending to new initiatives.

In general the center should deal with problems in the field of laboratory test methodology of heat pump systems and components, field test methodologies, characterisation and documentation standards for heat pumps and components including heat source systems.

Within the prestudy, the R+D objectives, the institutional organisation, responsibilities, limits, financing and boundary requirements of a heat pump center should be specified.

Boundary requirements are, for example

- Neutrality: A country being open to different view points on heat pumps.
- Language: English should be applicable as working language on project work and heat pump center communication.
- Affiliation: Preferably a university or other independent body.
- Back-up: Strong support by the host country's government will be necessary.
- Contacts: Good personal contacts should exist internationally.
- Freedom: The center should have no serious restrictions on publishing of R+D results and dissemination of information.
- Accessability: Located with good connections to major European and Overseas cities.
- Facilities: Apart from R+D facilities such as laboratories, library, computer etc. there should be conference and meeting services.

7.3.7. Applications of heat pumps in industry

(Excerpt of a first draft of the proposal originating from Dr. J. Berghmans, representative of Belgium in the Executive Committee on Advanced Heat Pumps, I.E.A.)

a) Objectives

The objective of an Annex on the subject of applications of heat pumps in industry is to achieve dissemination of information among participating countries on the subjects of: design, performance and operating experience concerning heat pumps applied to industrial processes.

It is proposed to consider only heat pumps with a thermal capacity of more than 100 kW. Only systems producing process heat will be considered, excluding all space heating systems.

b) Operating Scheme

The following scheme of operation is proposed:

1. designation of national representatives by participating country
2. submission of list of heat pump projects suited for further study by each participating country
3. selection of the set of projects upon which further reporting will be based
4. determination of reporting format

c) Background

In recent years the dramatic increase of the price of primary energy sources has generated considerable interest in techniques of industrial energy conservation. In many industrial processes the temperature difference of process heat and of waste heat leaving the plant is not very large (50°C). This indicates that heat pumps could be applied to such processes, resulting in considerable energy savings.

It is felt that the wide-spread use of heat pumps in industry is hampered due to limited experience with these systems. This is only partly due to the novelty of these systems. In addition a very large number of industrial processes are suited for heat pump application, yet in only a few processes have heat pumps been applied in most IEA member countries.

For these reasons an exercise aiming at the gathering of experience with heat pumps applied to as large a spectrum of industrial processes as possible seems warranted.

8. References

1. Rumpf, H.-G.:
Space heating pumps using running water as a heat source.
Paper No. 70/D2, UNIPEDE, Warsaw Congress, June 11-15, (1979)

2. Heap, R.D.:
Heat pumps for domestic use.
Proc., 2nd Int. CIB Symp. on Energy Conservation in the Built Environment, Copenhagen, May 28 - June 1, (1979)

3. Gilli, P.V. et al.:
Verringerung des Energieaufwandes mit Hilfe von Wärmepumpen
(Reduction of energy consumption using heat pumps)
dbv Verlag Graz, 1. Auflage 1978, ISBN 3-7041-0007-2

4. Soil Temperature Data, 1958 - 1972.
Environment Canada, 1973

5. Waterkotte, K.:
Erdreich-Wasser-Wärmepumpe für ein Einfamilienhaus
(Groundwater heat pump for a single family house)
Elektrowärme International, 30, Jan. (1972)

6. Research and development on extended range water source heat pumps.
Report to DBC/NRC by Hydro Quebec Research Institute, Canada, March (1978)

7. Von Cube, H.L.:
Wärmequellen für Wärmepumpen (Heat sources for heat pumps).
Proc. Conf. "Wärmepumpen", Essen, 1977, Vulkan-Verlag (1978)
ISBN 3-8027-2340-6

8. Lorentzen, G. and Haukas, H.T.:
The effect of climate on the economy of heat pumps.
Paper E1-56, I.I.R. XVth Congress, Venice, Sept. (1979)

9. A new and novel form of district heating using thermal effluents from electricity generating plants.
Energy, Mines and Resources, Canada, Dec. (1977)

10. Heat Pumps 1978.
Report by the Ad Hoc Committee on Heat Pumps, World Energy Conference, London, July (1979)

11. Altenkirch, E.:
Absorptionskältemaschinen, VEB Verlag Technik, Berlin (1954)

12. Plank, R., Ed:
Sorptionskältemaschinen, Handbuch der Kältetechnik, Teil 7, Springer-Verlag, Berlin (1959)

13. Lotz, H.:
Behaviour of Single- and Manifold-Medium Heat Pumps, Wärmepumpen, Vulkan-Verlag, Essen (1978),
ISBN 3-8027-2340-6

14. Ellington, R.T., et al.:
The Absorption Cooling Process, Institute of Gas Technology, Research Bulletin 14 (1957)

15. Wurm, J.:
An assessment of selected heat pump systems, Institute of Gas Technology, February (1977)

16. Hermans, M.L. and Asselman, G.A.A.:
A Stirling Engine heat pump system, Paper 789274, Vol. 3, Proc. 13th Intersociety Energy Conversion Conference, (IECEC),

San Diego, August 20-25, (1978), SAE P-75 Society of Automotive Engineers Inc., U.S.

17. Sarkes, L.A., et al.:
Gas fired heat pumps: An energy technology, ASHRAE Journal, 9, (1977), No. 3, March, p 36-41

18. Friedman, D.:
Light Commercial Brayton/Rankine space conditioning system, Energy Use Management, Ed. R.A. Fazzolare, Pergamon Press (1977), p. 243-250

19. Benson, G.M.:
Free Piston Heat Pumps, Proc. 12th IECEC, August (1977), American Nuclear Society

20. Strong, D.T.G.:
Directly fired domestic heat pump development, Antriebe für Wärmepumpen, Vulkan-Verlag, Essen, ISBN 3-8027-2341-4, (1979)

21. Pegley, A.C. and Rieke, A.:
Small gas engines as prime movers for heat pumps in domestic heating, Antriebe für Wärmepumpen, Vulkan-Verlag, Essen, ISBN 3-8027-2341-4 (1979)

22. Struck, W.:
Antrieb von Wärmepumpen mittels Dieselmotor, ibid.

23. Steimle, F.:
Absorptionswärmepumpen, Wärmepumpen Technologie, Band IV, Vulkan-Verlag, Essen (1980)

24. Mostofizadeh, Ch.:
Thermische Wärmepumpe, Elektrowärme im Technischen Ausbau, Elektrowärme International Ed. A, 35, January, (1977)

25. DIN 8900 (Draft), Part 3, Deutsches Institut für Normung e.V., (1979)

26. ASHRAE Standard 90-75, American Society of Heating, Refrigeration and Airconditioning Engineers, New York, (1975)

27. Sauer, K.-L.:
Die Absorptionswärmepumpe, Sonnenenergie und Wärmepumpe, 4, March-June, (1979)

28. Lazzarin, R. et al.:
Performance predictions of a LiBr absorption air conditioner utilising solar energy, Sun: Mankind's Future Source of Energy, Ed. de Winter, F. and Cox, M., Pergamon Press, Vol. 3, p. 1572-1580, New York, (1978), ISBN 0-08-022725-2

29. McChesney, R.M.:
Solar Heated and Cooled Financial Building, ibid.

30. Naito, S.:
Absorption Refrigerator of Natural Recirculation Type, U.S. Patent 3,978,683, Sept. 7, (1976)

31. Ward, D.S.:
Solar Absorption Cooling Feasibility, Solar Energy, 22, (1979) p. 259-268

32. Boldrun, B. and Lazzarin, R.:
How to Control a Solar Powered Absorption Chiller, Paper E1-45, XV International Congress of Refrigeration, Venezia, 23-29 Sept., (1979)

33. Grallert, K.K.H.:
Entwicklungsaspekte für solare Kühlanlagen, Sanitär- und Heizungstechnik, 3, p. 293-297, (1979)

34. Schelpuk, B.C. and Hooker, D.W.:
Development programmes in solar desiccant cooling for residential buildings, Int. J. Refrigeration, 2, No 5, p. 173-179, (1979)

35. Bolzan, M. and Lazzarin, R.:
Open cycle absorption cooling devices with spray chamber regenerator and air solar collector, Paper E1-46, XV Int. Congress of Refrigeration, Venezia, 23-29 Sept., (1979)

36. Birnbreier, H.:
Absorptionswärmepumpen,Rationelle Energieverwendung, Statusbericht (1978), BMFT, pp 528-531, (1979), ISBN 3-88135-069-1

37. Kremnyor, O.A. et al.:
Study and Development of Absorption - Type Solar-Cooling Units, Paper B2-54, XV Int. Congress of Refrigeration, Venezia, 23-29 Sept., (1979)

38. Keizer, C.:
Absorption machine driven by Solar Heat, Paper B2-60, ibid.

39. Alizadeh, S. et al.:
Design and optimisation of an absorption system operated by solar energy, Solar Energy, 22, pp 149-154, (1979)

40. Absorption Heat Pump for Waste Heat, Geothermal and Solar Energy, Sanyo Electric Airconditioning Equipment Co. Ltd., 3-10-15, Hongo, Bunkyo-Ku, Japan

41. Worsøe-Schmidt, P.:
Computer simulation of the solid absorption process, Paper B2-30, XV Int. Congress of Refrigeration, Venezia, 23-29 Sept., (1979)

42. Wolf, S.:
Hydrogen Sponge Heat Pump, Paper 759196, 10th IECEC, August, (1974), A.S.M.E., N.Y.

43. Gruen, D.M. et al.:
Lanthanum Nickel Aluminium Alloy, U.S. Patent 4,142,300, March 6, (1979)

44. Guilleminot, J.J. et al.:
Utilisation d'un cycle intermittent Zeolithe 13X-H_2O pour la refrigeration solaire, Paper E1-88, XV Int. Congress of Refrigeration, Venezia, 23-29 Sept., (1979)

45. System Tepidus, U.S. Patent Appl 865,214. Tepidus AB, Box 5607, 11486 Stockholm

46. Kinsella, E.:
Development of an absorption heat pump of improved COP, Paper B3.2 to Co-ordination Meeting of Contractors, E.C. Solar Energy R+D Programme, Brussels, 8 Dec., (1978)

47. Blakeley, R.E. et al.:
The Design and development of an absorption cycle heat pump optimised for the achievement of maximum coefficient of performance, E.C. Meeting on Heat Pumps Research, Development and Application, Brussels, 27-28 September, (1978)

48. Gelesic, A. and Kampfenkel, O.:
Sorption Heat Pumps, U.K. Patent Application GB 2,002,505A, 10 August, (1978)

49. Janssen H.A. and Oelert, G.:
Development of a Primary energy driven absorption Heat Pump for domestic heating, E.C. Meeting on Heat Pumps Research, Development and Application, Brussels, 27-28 September, (1978)

50. Janssen, H.A. et al.:
Heizverfahren mit einer Absorptionswärmepumpenanlage, German Patent DE 2803118A1,

51. Macriss, R.A.:
Selecting Refrigerant-Absorbent Fluid systems for solar energy utilisation, ASHRAE Trans, 82, (1976) Pt 1, p. 975-988

52. Renz, M.:
Suitability of Solvent/Refrigerant Agents in Absorption Heat Pumps, Wärmepumpen, ed. Paul, J., Vulkan-Verlag, Essen, (1978), ISBN 3-8027-2340-6

53. Stephan, K. and Seher, D.:
Arbeitsgemische für Sorptionswärmepumpen, Klima-Kälte-Heizung, January, (1980), p. 21-32

54. Biermann, W.J. and Offenhartz, P.O.D.:
Absorption Cooling Systems, ISES, 3rd Conf. 'Use of Solar Energy for cooling of Buildings', San Francisco, Feb. 15-17, (1978), p. 23

55. Jelinek, M. et al.:
Enthalpy-concentration diagram of the system R 22 - Dimethylformamide and performance characteristics of refrigeration cycle operating with this system, ASHRAE Trans, 84, Pt 2, (1978)

56. Colosimo, D.D.:
On-site heat activated heat pumps, Paper presented at the Conference for Technical Opportunities for Energy Conservation in Appliance, ERDA, Boston, Mass., 11 May, (1976)

57. Akerman, J.R.:
Automotive air conditioning systems with absorption refrigeration, Paper 710037, SAE Automotive Engineering Congress, Detroit, Jan. 11-15, (1971)

58. Wallner, R.:
Fuel saving future alternatives for automotive A/C plants, Paper E1-57, XV Int. Congress of Refrigeration, Venezia, 23-29 Sept., (1979)

59. Felli, M. and Muttucci, F.:
p-T-x experimental data on working mixtures for absorption refrigeration, evaluation of their performance with low generator temperatures, Paper B1-83, XV Int. Congress of Refrigeration, ibid.

60. Allen, R.A. and Murphy, K.P.:
Development of a new Gas fired Absorption Heat Pump, Paper presented at ASHRAE Semiannual Meeting, Los Angeles, 3-7 Feb., (1980)

61. Malewski, W.:
Heat pump system according to the absorption principles for performance feed into district heating systems, Wärmepumpentechnologie, Band II, Ed. Paul J., Vulkan-Verlag, Essen, (1979) p. 80-85

62. A Heat Transformer that upgrades waste heat to higher temperatures, News Item, Chemical Engineering, Sept. 24, (1979), p. 67

63. Cohen, G. et al.:
Valorisation de colones à bas niveau au moyen de cycles trithermes, Entropie, 84, Nov-Dec, (1978), p. 31-37

64. Ambrose, E.R., Ed.:
Proceedings on the Symposium 'Heat Pumps - Improved Design and Performance, San Francisco, 19-22 January, (1970), ASHRAE, N.Y.

65. Comly et al.:
Heat Pumps - Limitations and Potential, GEC Report No. 75CRD185, September, (1975), Schenectady, N.Y.

66. Kirschbaum, H.S. and Veyo, S.E.:
An investigation of methods to improve heat pump performance and reliability in a northern climate, Vol. I-III, EPRI Report EM-319, January (1977)

67. Groff, G.C. et al.:
Recent investigations of air-source heat pump performance in cold climates, Paper E1-25, XV Int. Congress of Refrigeration, Venezia, 23-29 Sept., (1979)

68. Rink, T.:
Operating experiences with electric, dual source (hybrid) heat pumps, Wärmepumpentechnologie, Band I, Ed. Paul J., Vulkan-Verlag, Essen, (1978), ISBN 3-8027-2340-6

69. Wie Energieverschwendung vertraglich gesichert wird, News Item, Frankfurter Allgemeine Zeitung, 15 January, (1980)

70. Granryd, E.:
Experiences from a domestic heat pump installation, field measurements, Winter 1979, Scandinavian Refrigeration, April, (1979)

71. Freund, P.:
Domestic Applications of small heat pump units, Paper E1-12, XV Int. Congress of Refrigeration, Venezia, 23-29 September, (1979)

72. O'Connor, T.C. and Kyne, H.F.:
The performance of air source heat pumps in Northern European climatic conditions. Presented at Meeting on E.C. Heat Pumps Research, Development and Application, Brussels, 27-28 Sept., (1978)

73. McMullin, J.T. and Morgan, R.:
The development of domestic heat pumps, ibid.

74. Burgess, A.S. et al.:
Ground Source Heat Pumps, Report No HP-5, Solar Energy Project, by Acres Consulting Services Ltd. for Division of Building Research, National Research Council of Canada, June, (1978)

75. Jacobson, L. Ed.:
Nordic Symposium on earth heat pumps, Chalmers University of Technology, Göteborg, Sweden, 15-16 October, (1979)

76. Morgenssen, H.P.:
The ground as a heat source for heat pumps-performance and reactions, Paper E1-27, XV Int. Congress of Refrigeration, Venezia, 23-29 September, (1979)

77. Granryd, E.G.:
Ground source heat pump systems in a northern climate, Paper E1-82, ibid.

78. Gouldburn, J.R. and Fearon, J.:
Deep ground evaporators for heat pumps, Applied Energy, 4, (1978), p. 293-313

79. Schlosser, K.:
A mathematical analysis of the earth system for heat pumps, Scandinavian Refrigeration, 4/79 (1979), p. 267-272

80. Van der Kooi et al.:
A solar assisted heat pump system for residential heating, Paper E1-62, XV Int. Congress of Refrigeration, 23-29 Sept., (1979)

81. Bougard, J. and Pilatte, A.:
Performance des installation solaire à pompe à chaleur, Paper E1-38, ibid.

82. Lorenz, F.:
Simulation d'une chauffage residentiel par pompe de chaleur utilisant des capteurs solaires nus comme source du froid. Paper E1-81, ibid.

83. Speidel, K.:
Dornier/RWE solar house in Essen, FRG. Proc. CCMS/ISES, Int. Solar Energy conference on Performance of Solar Heating and Cooling Systems, Düsseldorf, 19-20 April, (1978)

84. Bruno et al.:
The Philips experimental house: a system's performance study, ibid.

85. Schimmelpfennig, K.:
Energy Roof for utilisation of environmental energy for space heating, Wärmepumpentechnologie, Band III, Ed. Paul J., Vulkan-Verlag, Essen, (1979), ISBN 3-8027-2345-7

86. Kremnyov, O.A. et al.:
Geothermal Air Conditioning with heat pumps, Paper E1-22, XV Int. Congress of Refrigeration, Venezia, 23-29 September, (1979)

87. Kruse, K. and Wrede, F.:
Possibilities of energy saving in compressors for refrigeration systems, Paper B2-37, ibid.

88. Paul, J. and Steimle, F.:
Speed controlled compressors - Effects on the performance of domestic heat pumps, Paper E1-68, ibid.

89. Vester, P.:
Heat Pump Compressors, 220 V. Danfoss Energy View, KF 00.V1.02, (1979)

90. Wurm, T. and Lassota, M.J.:
New rotary refrigeration compressor - its development and potential, Paper B7-42, XV Int. Congress of Refrigeration, Venezia, 23-29 September, (1979)

91. Degueurce, B. and Pascal, M.T.:
Compression directe de vapeur d'eau par un compresseur monovis, Paper B2-15, ibid.

92. Ferns, R and Niess, R.:
High temperature heat pumps make waste heat profitable, Pulp and Paper Can., 80, No 1, January, (1979), p. 37-39

93. Polman, J. et al.:
A capacity controlled free piston electrodynamic compressors, Paper B2-12, XV Int. Congress of Refrigeration, Venezia 23-29 September, (1979)

94. Cooper, W.D. and Borchardt, H.J.:
The use of refrigerant mixtures in air-to air heat pumps, Paper E1-60, ibid.

95. Kraus, W.E. and Vollmer, D.:
Thermodynamic diagrams for nonazeotropic refrigerant mixtures, Paper B1-48, ibid.

96. Saluja, S.N. et al.:
Operating characteristics of a mixed refrigerant vapour compression system. Refrigeration and Air Conditioning, March (1978), p. 83-86, 113

97. Paul, J. Ed.:
Gaswärmepumpenpraxis, Wärmepumpentechnologie, Band IV, Vulkan-Verlag, Essen (1980)

98. Fox, U. and Broer, F.:
Zur Auslegung von Gasmotor-Wärmepumpen, HLH, 30, Nr. 8, August (1979)

99. Bussmann, W.:
Single Source Gas Heat Pump for 64 Dwellings in Dortmund, Schöffenweg, Wärmepumpentechnologie, Band III, Ed. Paul J., Vulkan-Verlag, Essen (1979), ISBN 3-8027-2345-7

100. Söllner, R.:
Fast running four-stroke gas motors, Wärmepumpentechnologie, Band II, Ed. Paul J., Vulkan-Verlag, Essen (1979), ISBN 3-8027-2341-4

101. Struck, W.:
Drive of heat pumps by means of Diesel motors, ibid.

102. Study of diesel engine heat pump for heat production in housing estates and large premises, Contract 770008-9, Swedish Council of Building Research to Volvo Flygmotor, Box S-461 01 Trollhättan, Sweden (1977)

103. Sørensen, B.E.:
Diesel heat pump for district heating, Scandinavian Refrigeration, 4/79, p. 275-281

104. Pohle, J. et al.:
Gas driven heat pumps - Development and experiences, Wärmepumpentechnologie, Band I, Ed. Paul J., Vulkan-Verlag, Essen (1978), ISBN 3-8027-2340-6

105. Bauer, G.:
Small gas and diesel motor heat pumps, Wärmepumpentechnologie, Band II, Ed. Paul J., Vulkan-Verlag, Essen (1979), ISBN 3-8027-2341-4

106. Schmitz, G.:
Diesel-powered heat pumps, Wärmepumpentechnologie, Band III, Ed. Paul J., Vulkan-Verlag (1979), ISBN 3-8027-2345-7

107. MacMichael, D.B.A. and Reay, D.A.:
Feasibility and design study of a gas engined high temperature industrial heat pump, EC. Report EUR 62 37, (1979), Brussels

108. Lior, N.:
Solar energy and the steam Rankine cycle for driving and assisting heat pumps in heating and cooling modes, Energy Conversion, 16, pp. 11-123 (1977)

109. Angelino, G. et al.:
The CNPM thermal heat pump, Papers E1-16, E1-17 and E1-18, XV Int. Congress of Refrigeration, Venezia, 23-29 Sept. (1979)

110. Rousseau, I. and Noe, J.C.:
Solar powered Rankine-cycle heat pump, Paper 769202, 11th IECEC, September (1976), A.I.Ch.E., N.Y.

111. Bauer, B.:
Eine Möglichkeit der besseren Ausnutzung von Wärmepumpen zum Antrieb von Kältemaschinen und Wärmepumpen. Brennst.-Wärme-Kraft, 30, Nr. 7, July (1978)

112. Biancardi, F.R. and Melikian, G.:
Analyses and Design of an 18-Ton Solar-Powered Heating and Cooling system. Paper 789524, 13th IECEC, San Diego, August (1978), S.A.E., Warrendale, P.A.

113. Jaumotte, A. and Bougard, J.:
Development of Rankine Machines, Paper B4.1, EC. Coordination Meeting of Contractors, E.C. Solar Energy R&D programme, 8 December (1978), Brussels

114. Berclaz, G.:
Thermocompresseur frigorifique d'une type nouveau. La Revue Polytechnique, No 1355, p. 1093-1095, November (1976)

115. Fischer, R.D. et al.:
A solar heat pump featuring pivoting tip vanes. Proc. Conf. Solar Energy Heat Pump Systems for heating and cooling Buildings. Ed. Gilman S., ERDA Doc. COO-2560, June (1975), pp. 87-97

116. Eckard, S.E.:
Test results for a Rankine engine powered vapour compression air-conditioner for 366 K heat source, Paper 769205, 11th IECEC, September (1976), A.I.Ch.E., N.Y.

117. KB. United Stirling (Sweden) AB & Co., Fack, S 20110 Malmö 1, Sweden

118. Haines, D.J.:
Stirling Cycle Apparatus, British Patent Application GB 2012886A, 16 January (1979)

119. Zacharias, F.:
Betrachtungen zum äußeren Verbrennungssystem des Stirling-Heißgasmotors, MTZ, 32, Nr. 1, January (1971)

120. Marusak, T.J. and Chiu, W.S.:
The matching of a free piston stirling engine coupled with a free piston linear compressor for a heat pump application. Paper 789272, 13th IECEC, San Diego, (1978), S.A.E., N.Y.

121. Gerstmann, J. and Friedman, Y.:
Liquid piston heat actuated heat pump and methods of operating same, U.S. Patent 4148195, 10 April (1979)

122. Vauth, R.:
A new heat pump system operating with an air refrigeration cycle, Wärmepumpentechnologie, Band I, Ed. Paul J., Vulkan-Verlag, Essen (1978), ISBN 3-8027-2340-6

123. Hise, E.C.:
Heat pumps with air-water and other fluids, Energy, Winter (1979), p. 25-27

124. Edwards, T.C.:
A new air conditioning refrigeration and heat pump cycle, ASHRAE Trans., 84, pt II, (1978), pp. 150-172

125. Ecker, A.L. et al.:
A Tabular Boundary-state Analysis of the Edwards Cycle, ASHRAE Trans., 84, pt II, (1978), pp. 173-184

126. MüllerBörner et al.:
Thermische Wärmepumpe, German Patent DE 2739689 A 1, 2 September (1977)

127. Belic, M.:
A solid-state solar powered heat transfer device, J. App. Physics, 50, Nr. 9, September (1979), pp. 5682-5685

128. Barclay, J.A.:
The design and performance of a magnetic refrigerator and heat engine, Paper B1-75, XV Int. Congress of Refrigeration, Venezia, 23-29 September (1979)

129. British Standard BS 4434:1969, Specification for requirements for refrigeration safety, London

130. Unfallverhütungsvorschrift 10a, Kälteanlagen, (VBG 20), März 1974, Verwaltungs- und Berufsgenossenschaft, W. Germany

131. Handrock, W.:
Die Beheizung des Sportzentrums Paderborn mit einer Gaswärmepumpe, Int. Fachtagung "Wirtschaftliche Energieversorgung mit Erdgas in Bädern, Sport und Freizeitbauten", 23-24 Nov. (1978), München, Vulkan-Verlag, Essen, ISBN 0172-3154

132. Bußmann, W.:
Beheizung des Freibades Dortmund-Wellinghofen mit einer Gaswärmepumpe (Betriebserfahrungen aus zwei Jahren), ibid.

133. Petersen, B.:
Diesel heat pumps for district heating plants and for the heating of large housing blocks. Final report for the E.C. Project No. 373-78-1 EEDK, Burmeister & Wain A.S., Torvegade 2, 1449 Copenhagen K, Denmark

134. Kennedy, D.M.:
A.G.A. Air Conditioning Research - past prospects, present perspectives. Proc. 2nd Conf. on Natural Gas Research and Technology, Atlanta, Georgia, 5-7 June (1972)

Acknowledgements

We wish to acknowledge the contributions of the 13 national teams for their collection of the national statistics and Case Study data; to Prof. Dr. H. Loewer for his contributions on the R+D Trends, and Strengths and Weaknesses of the sorption systems; to the developers of the advanced heat pumps for their assistance in providing information on their systems; to the many experts with whom discussions were held during the project; and to the staff of the Battelle-Institut e.V. for their assistance with the compiling of the report.

SYSTEM TYPE: organic absorption — Profile No 2

1. **Description**

Heat Pump cycle: single stage absorption
working fluid: a) organic work fluid/organic solvent; b) R22/E 181.
source: a) ambient air, b) ambient air (or ground water)
sink: a) air b) water; feed 40 to 55°C, return 35 to 50°C.

Drive cycle:
working fluid: } not applicable
fuel: natural gas
use: a) domestic central space heating and cooling.
b) domestic central space and water heating.

2. **Design data**

	a)	b)	
N_{hu}, heat output at a) +8 b) −2°C source temp.	26.4	12	kW
N_{hp}, heat input (including a) 75 b) 95 % heater efficiency)	21.1	10.8	kW
N_{aux}, electrical input (fans, pumps, controls)	1.0	0.9	kW

3. **Back-up:**

	a)	b)
type:	not known	none-boiler operation
fuel:	-	of unit
% max. capacity:	-	170

4. **Controls:**

capacity:	not known	$T_a > 3^0C$ heat input ; $-4 < T_a < 3^0C$ ejector pump ;
defrost:	not known	$T_a < -4^0C$ boiler operation
back-up:	not known	see above

5. **Performance**

air temp. °C	source temp. °C	heating/cooling output, N_{hu}, (kW) a)	b)	heating/cooling CoP_{eff} a)	b)	CoP'_{eff} a)	b)
− 10	− 10	23	10.8	1.05	1.0	0.95	0.95
0	0	25	11	1.15	1.1	1.05	1.05
+ 10	+ 10	27	7.2	1.25	1.4	1.1	1.17
+ 25	+ 25	-	-		-		-
+ 35	+ 35	10	-	0.5	-	0.48	-

6. **Capital Costs***

output, N_{hu} (kW)	3/4	10/12	15/20	50	100	400	≥ 2000
unit cost (DM)							
installed cost (DM) a)			4500				
installed cost (DM) b)	5000	7000	8000	not available			

*) estimated costs at 1979 prices and exchange rates without taxes; not including heat distribution or back-up costs

7. **Maintenance costs**

3 % of installed capital cost per annum

8. **Service life in years**

source equipment: 15/20
heat pump: 15/20
drive: -
weighted mean: 15/20

9. **Year of introduction:** 1985/86.

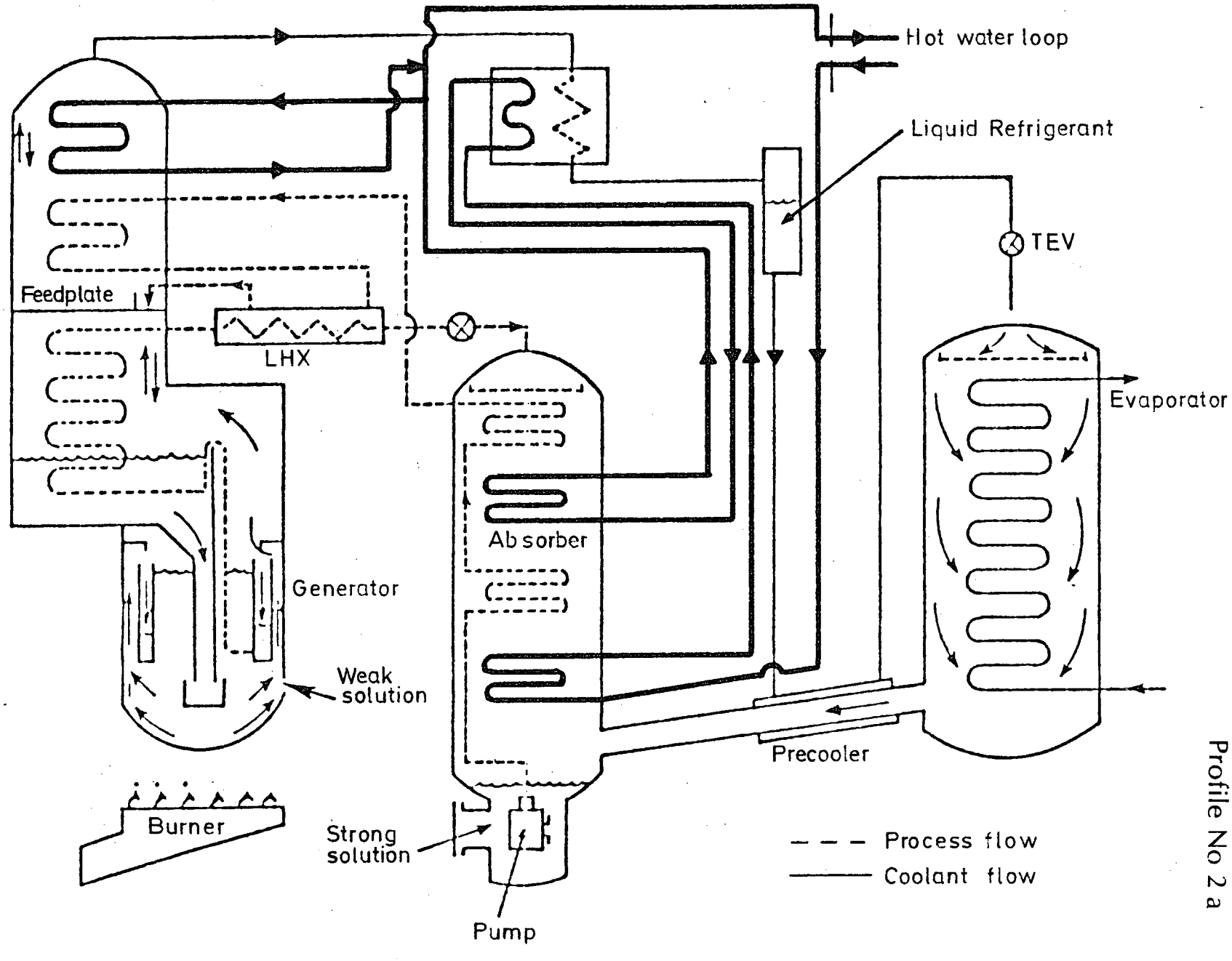

absorption heat pump

Profile No 2 a

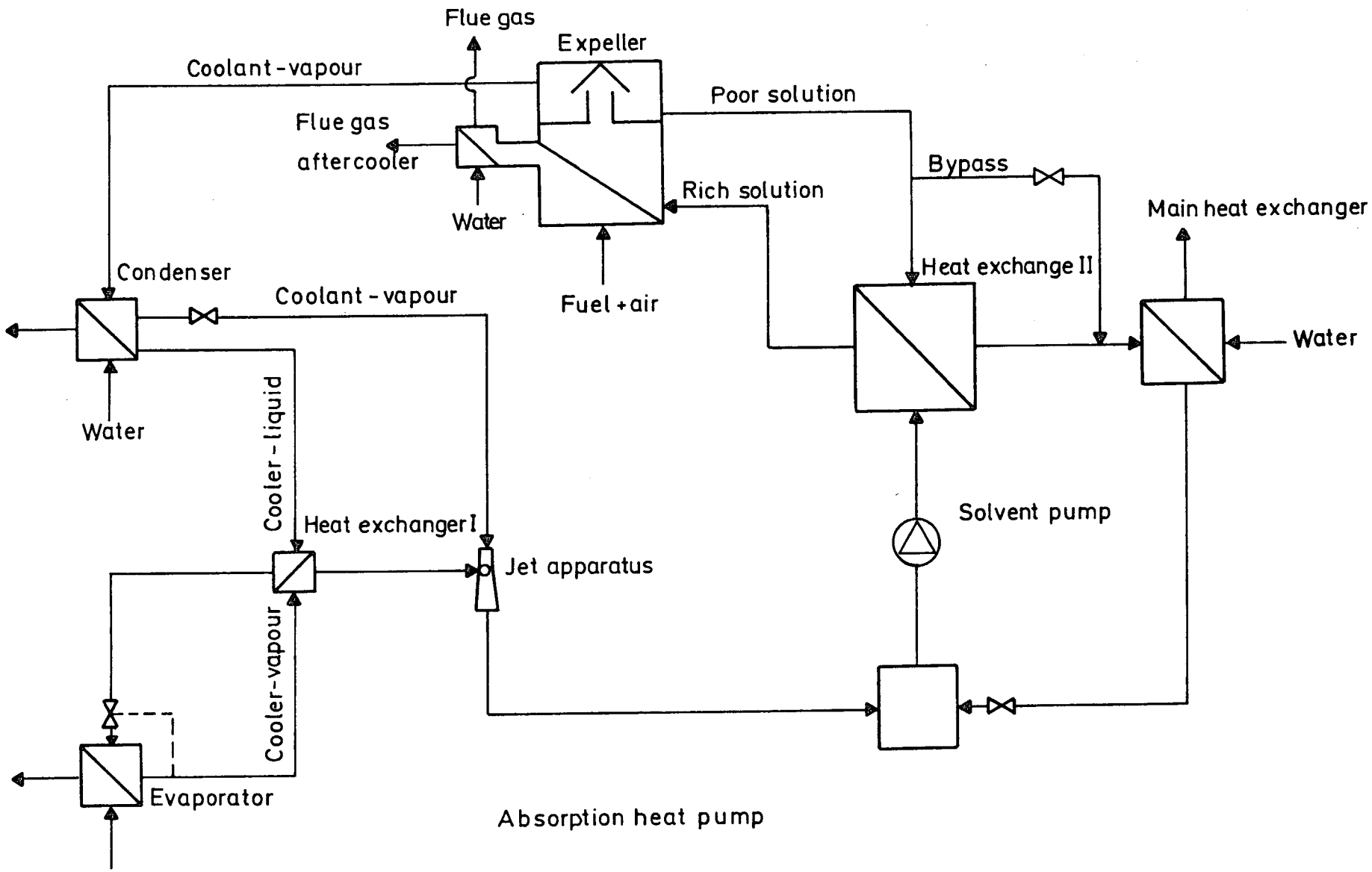

Process flow

Profile No 2 b

A-3

I. E. A. Study Advanced Heat Pump Systems.

Operating Characteristics of Advanced Heat Pump Systems

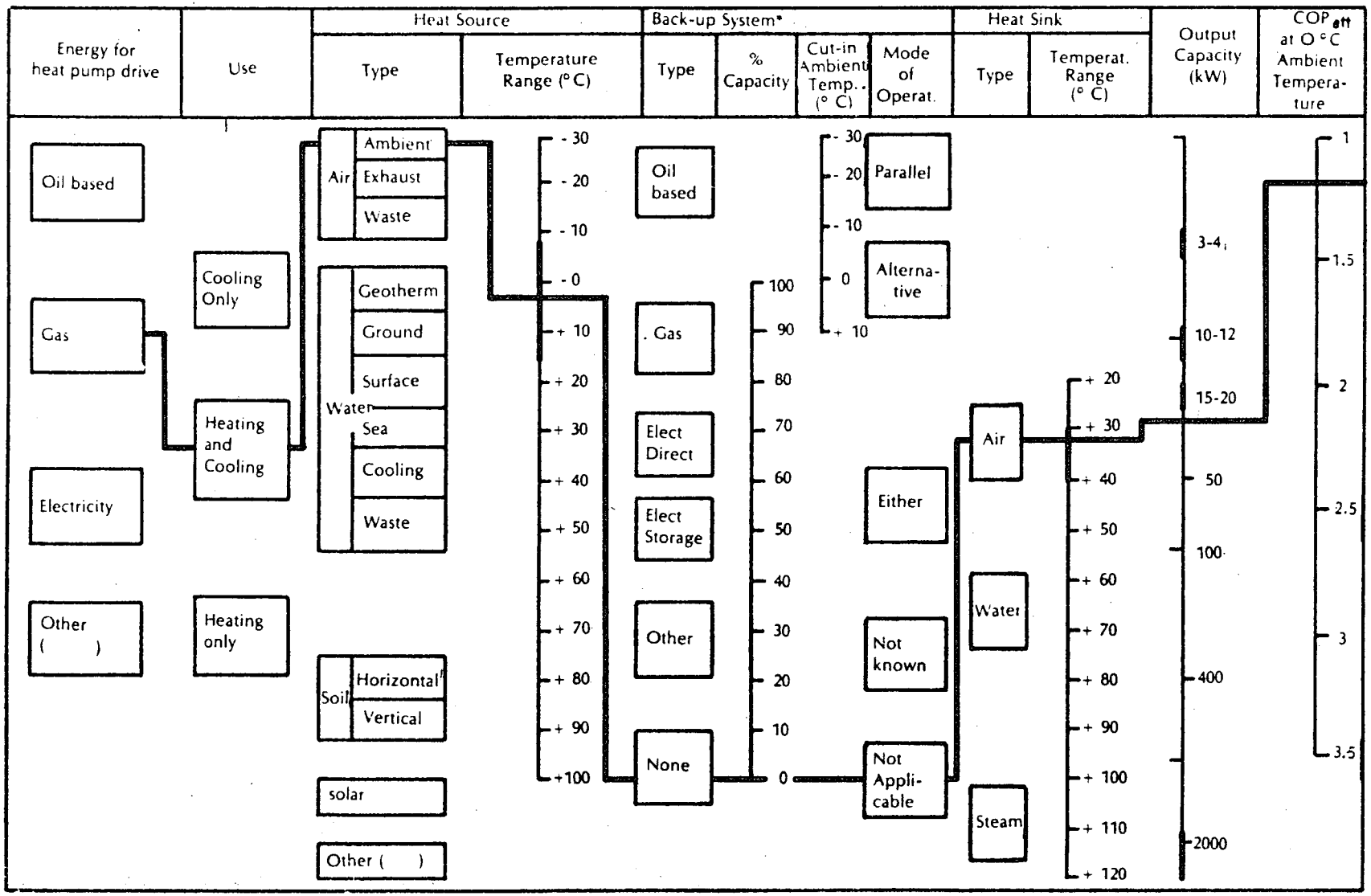

* Not emergency

Profile No 2 (a)

I. E. A. Study Advanced Heat Pump Systems.

Operating Characteristics of Advanced Heat Pump Systems

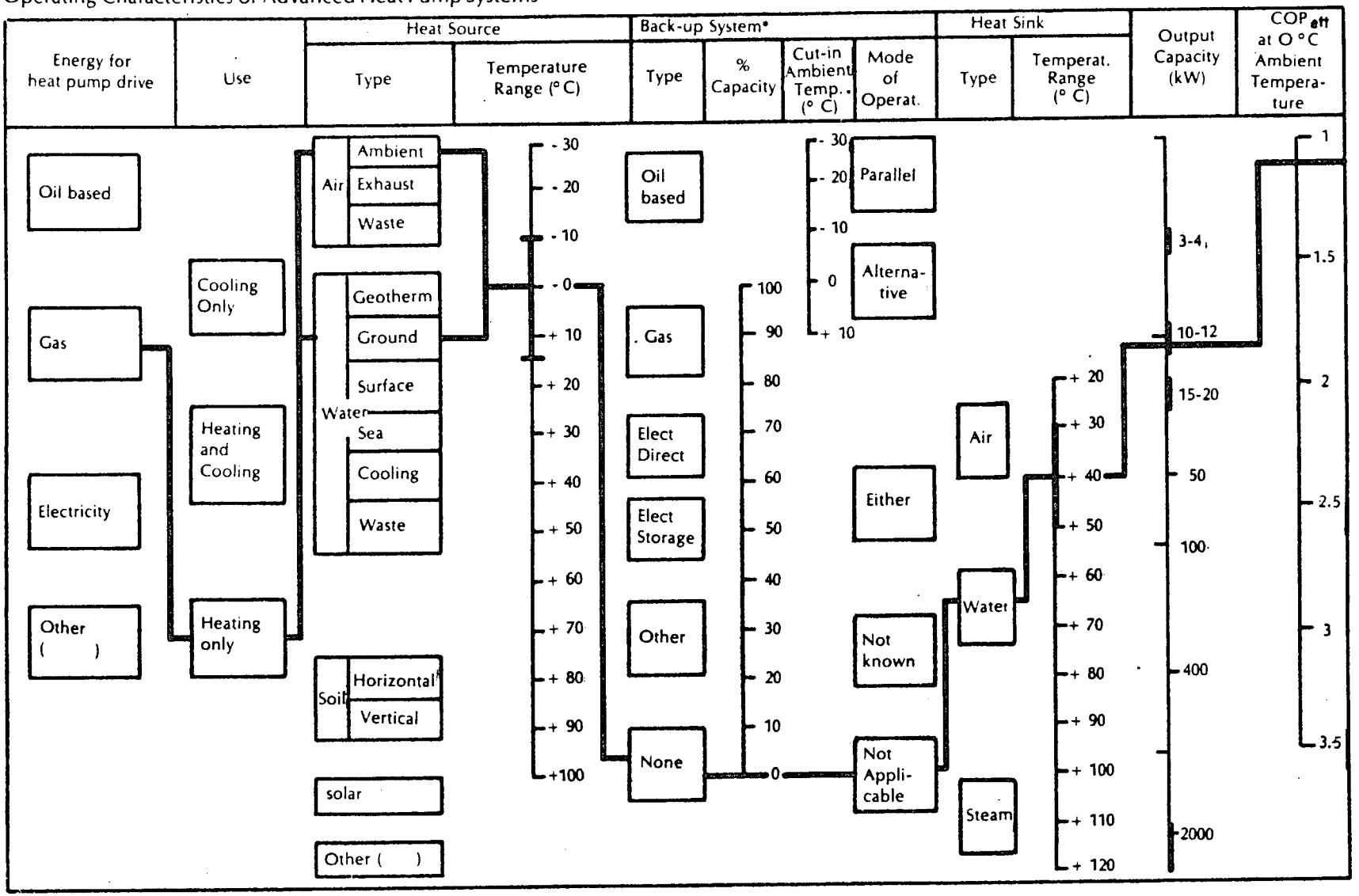

* Not emergency

Profile No 2 (b)

Profile No 2

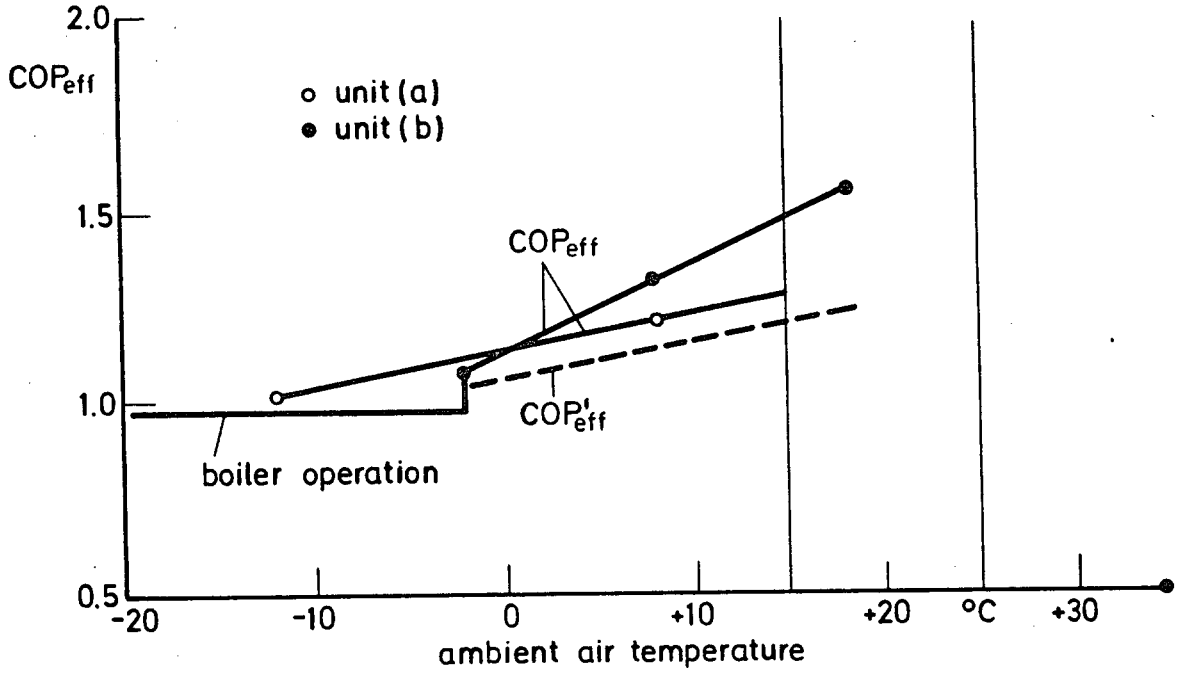
2.0
COPeff
1.5
1.0
0.5
o unit (a)
● unit (b)
COPeff
COP'eff
boiler operation
-20
-10
0
+10
+20
°C
+30
ambient air temperature

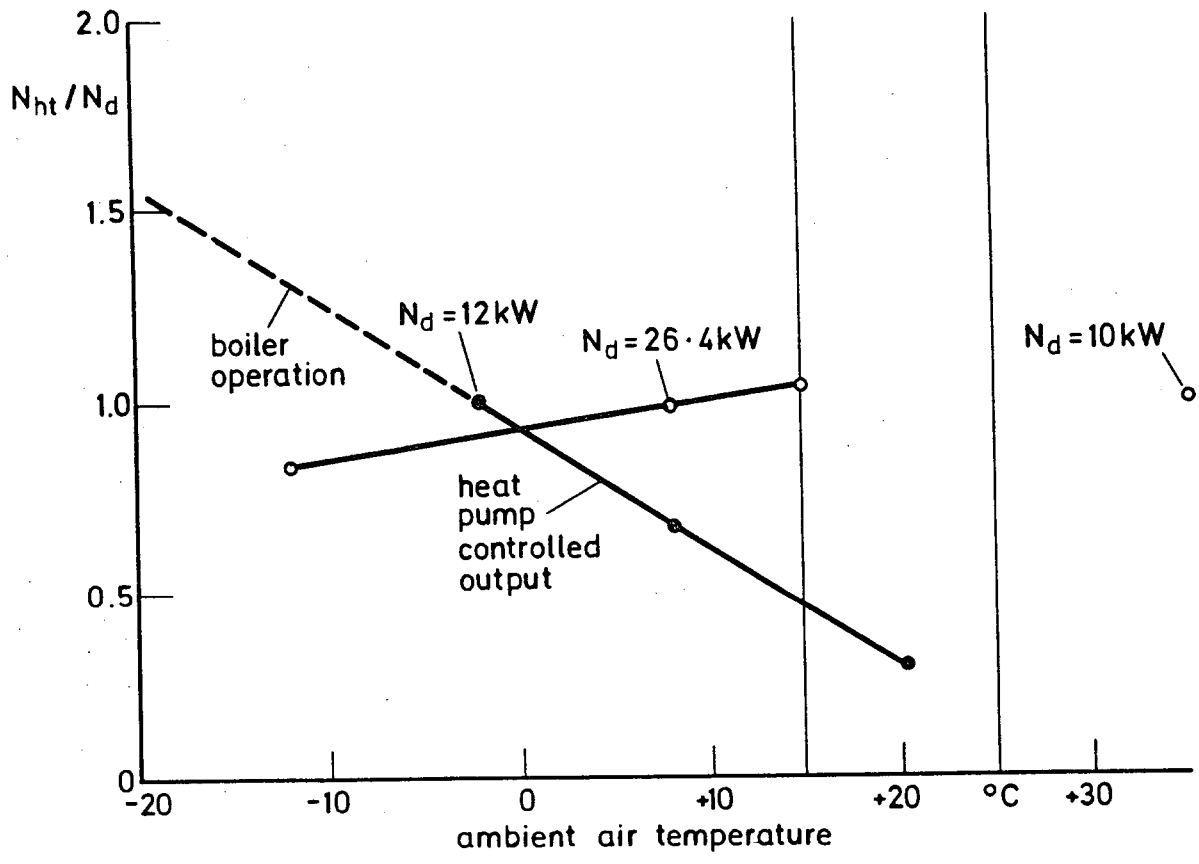
2.0
Nht / Nd
1.5
1.0
0.5
0
boiler operation
Nd = 12 kW
Nd = 26·4 kW
Nd = 10 kW
heat pump controlled output
-20
-10
0
+10
+20
°C
+30
ambient air temperature

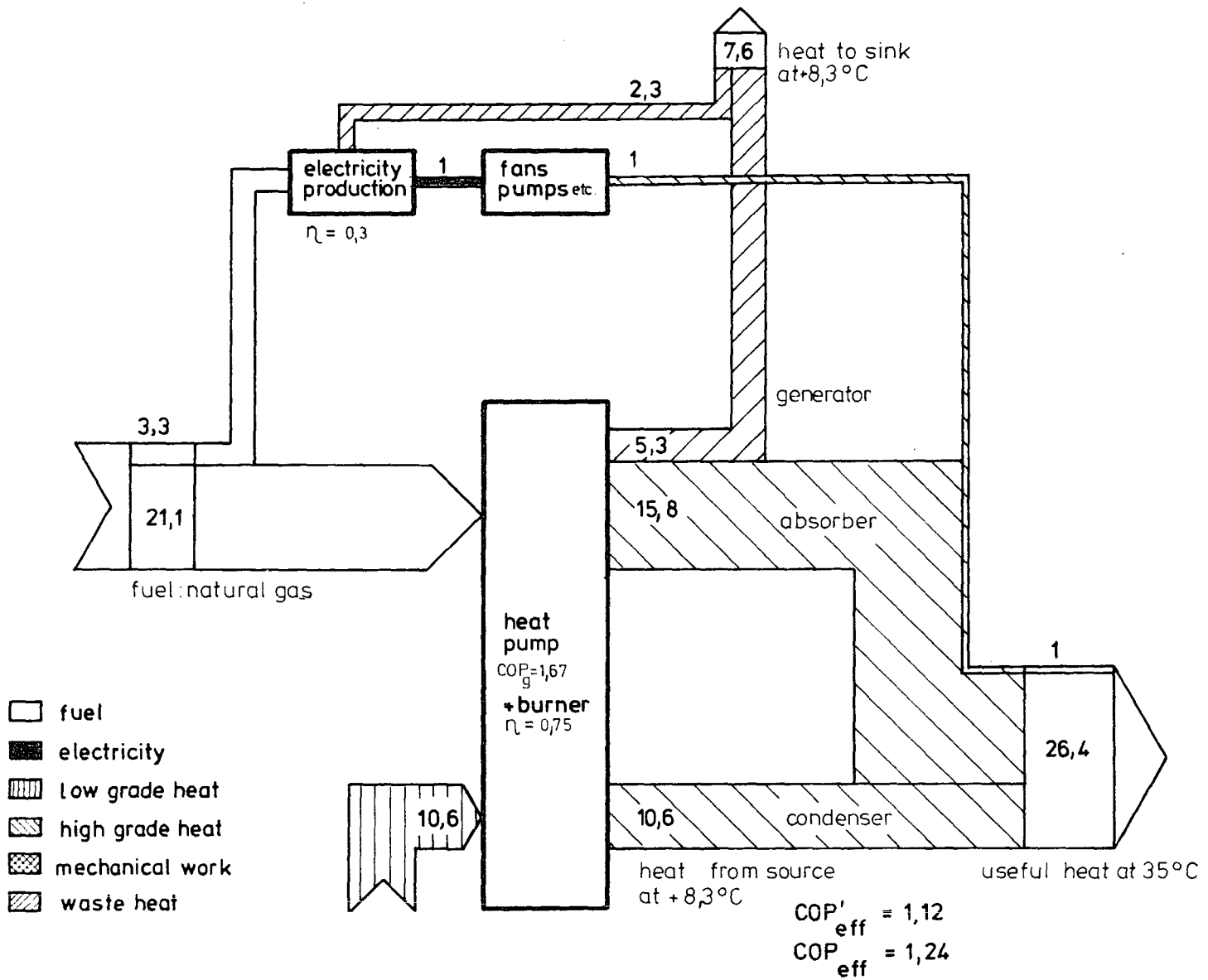

Profile No.2a

Profile No. 2 b

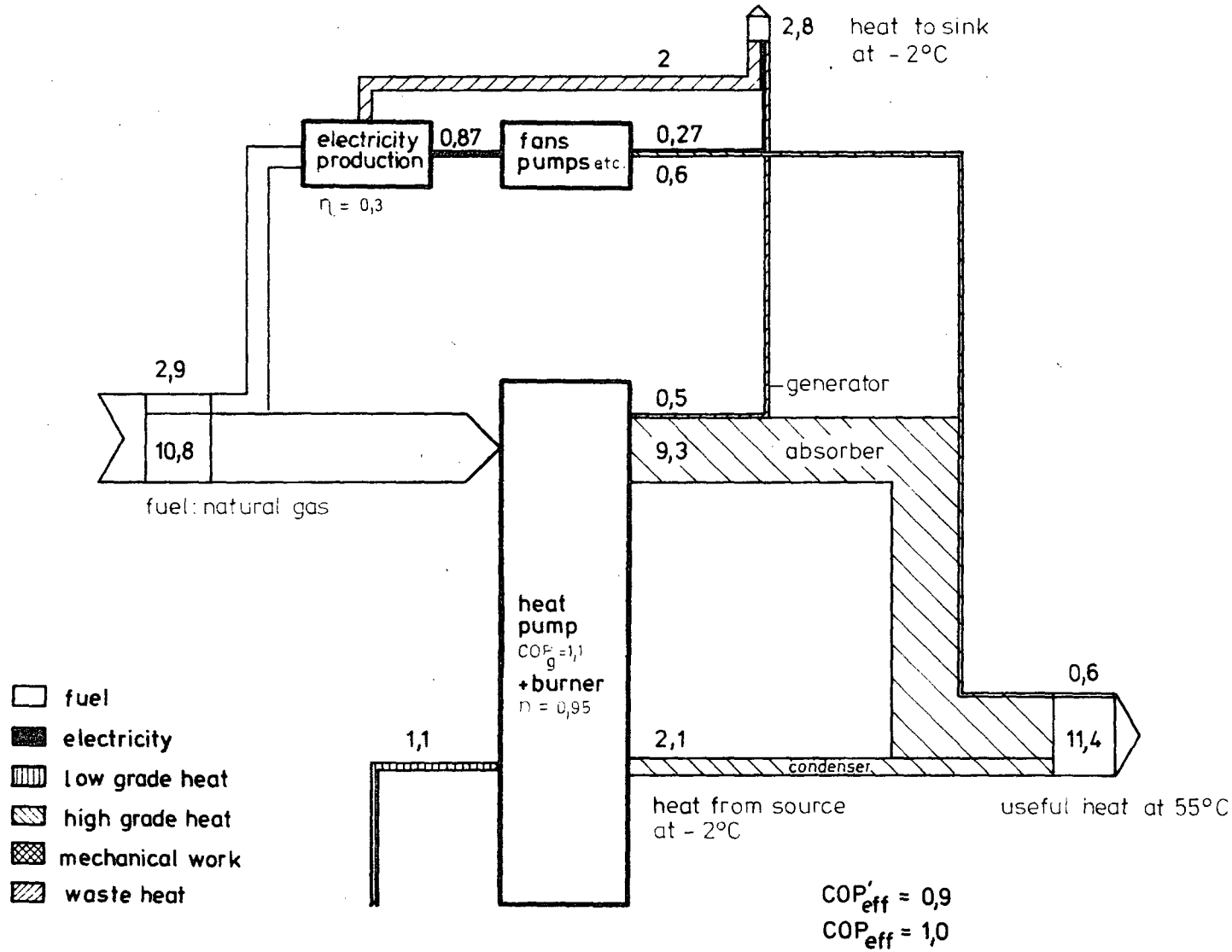

SYSTEM TYPE: ammonia two-stage absorption — Profile No 3

1. **Description**

Heat Pump cycle: absorption, two-stage
working fluid: NH_3/H_2O
source: coking plant waste water 40 to 50°C
sink: district heating; feed 90°C, return 50°C

Drive cycle: -
working fluid: -
fuel: coke oven gas (5.4 kWh/m³)
use: district heating

2. **Design data**

N_{hu}, heat output at 40-50°C source temp.	3700	kW
N_{hp}, heat input (including – % heater efficiency)	2400	kW
N_{aux}, electrical input (fans, pumps, controls)	30	kW

3. **Back-up:** type: district heating boiler
fuel: -
% max. capacity: -

4. **Controls:** capacity: none
defrost: not necessary
back-up:

5. **Performance**

air temp. °C	source temp. °C	heating/cooling output, N_{hu}, (kW)	heating/cooling	
			CoP_{eff}	CoP'_{eff}
- 10 0 + 10	+ 50	2968	1.08	1.01
+ 25 + 35	-	-	-	-

6. **Capital Costs*)**

output, N_{hu} (kW)	3/4	10/12	15/20	50	100	400	2950 ≥ 2000
unit cost (DM)							1.35 m
installed cost (DM)							1.70 m

*) estimated costs at 1979 prices and exchange rates without taxes; not including heat distribution or back-up costs

7. **Maintenance costs**

2.. % of installed capital cost per annum

8. **Service life in years**

source equipment: 20
heat pump: 20
drive: 20
weighted mean: 20

9. **Year of introduction:** 1981

Profile No 3

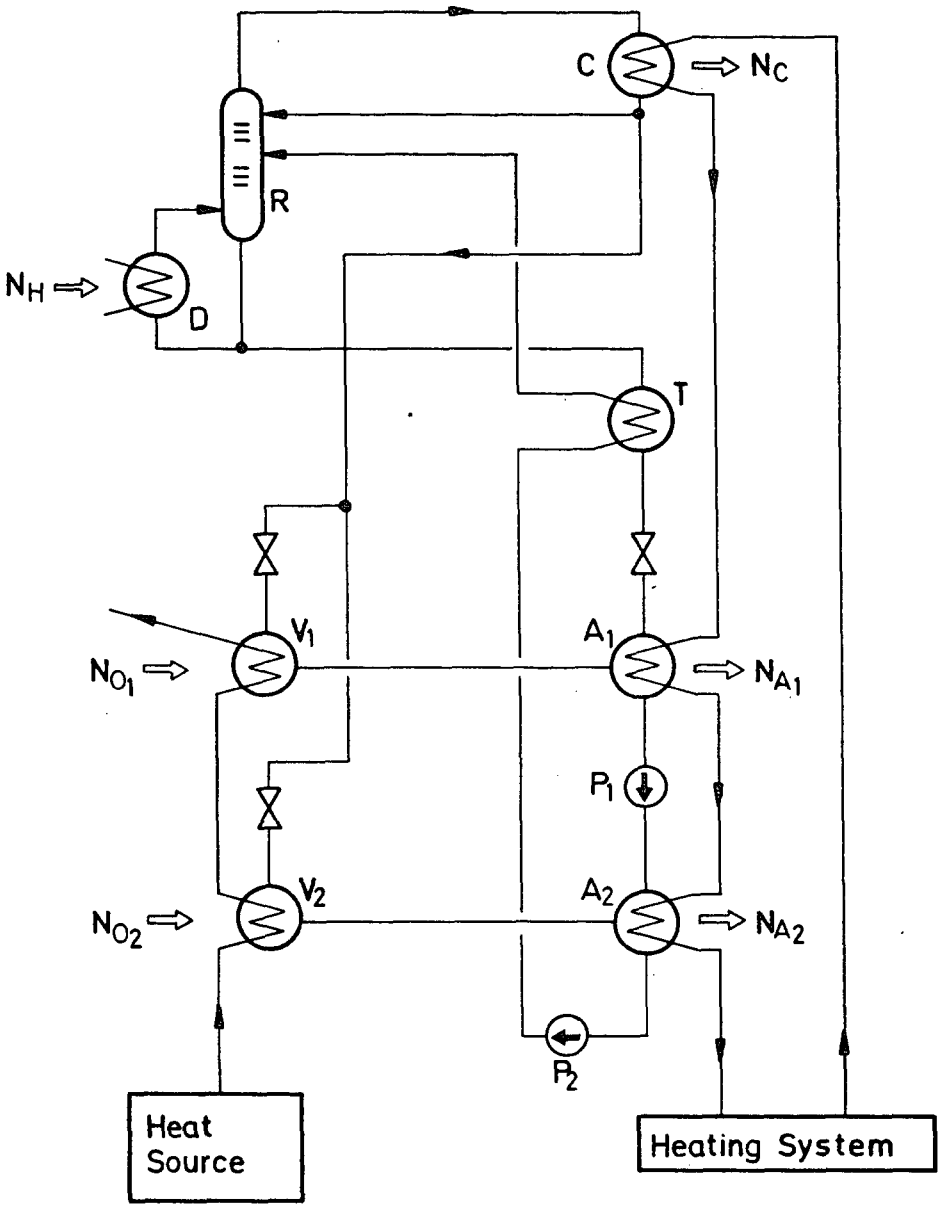

Flow Scheme of the System

C - Condenser
A - Absorber
V - Evaporator
D - Desorber
R - Rectifying Column
T - Solvent Heatexchanger
P - Pump

I. E. A. Study Advanced Heat Pump Systems.

Operating Characteristics of Advanced Heat Pump Systems

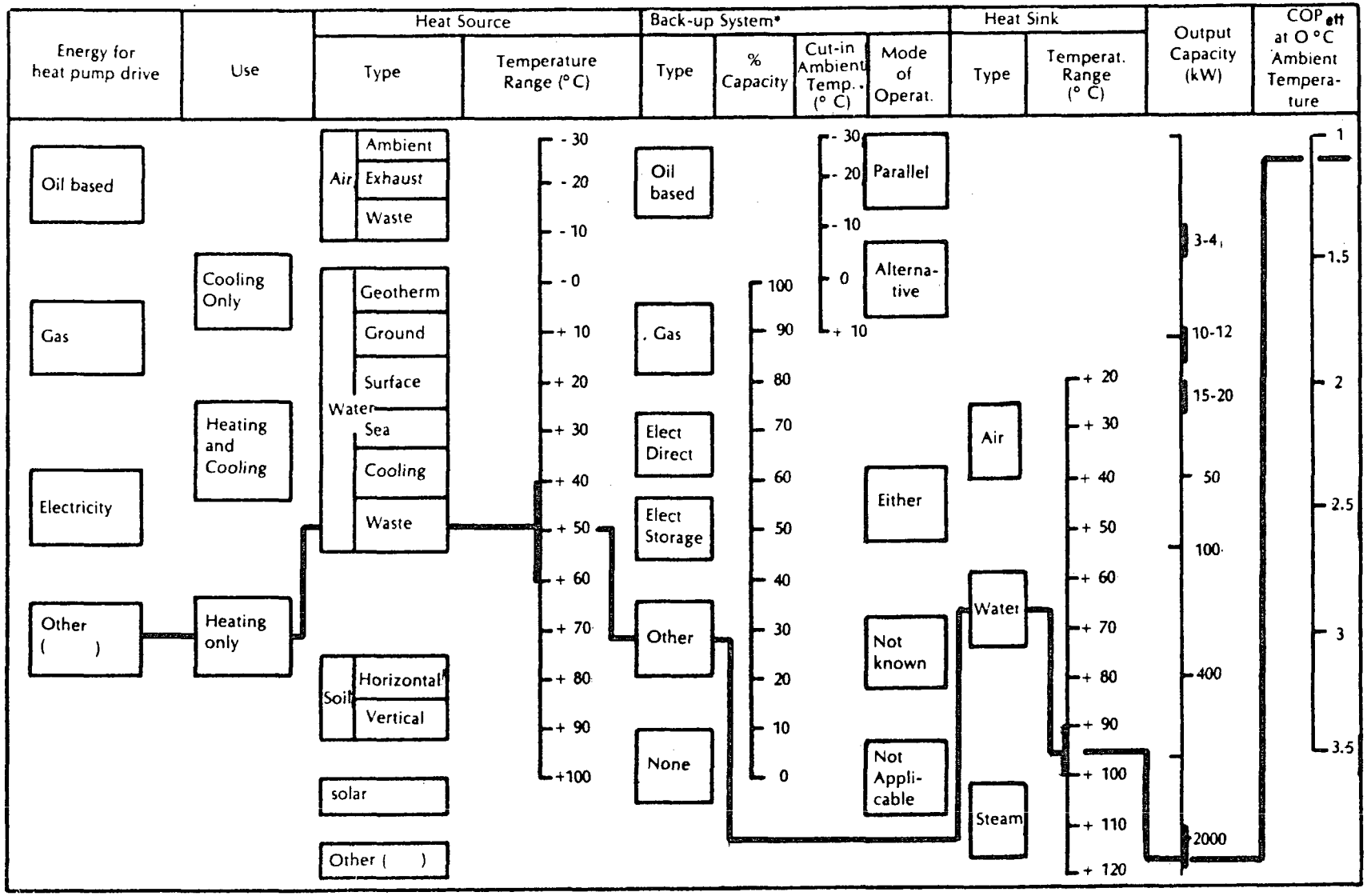

* Not emergency

Profile No.3

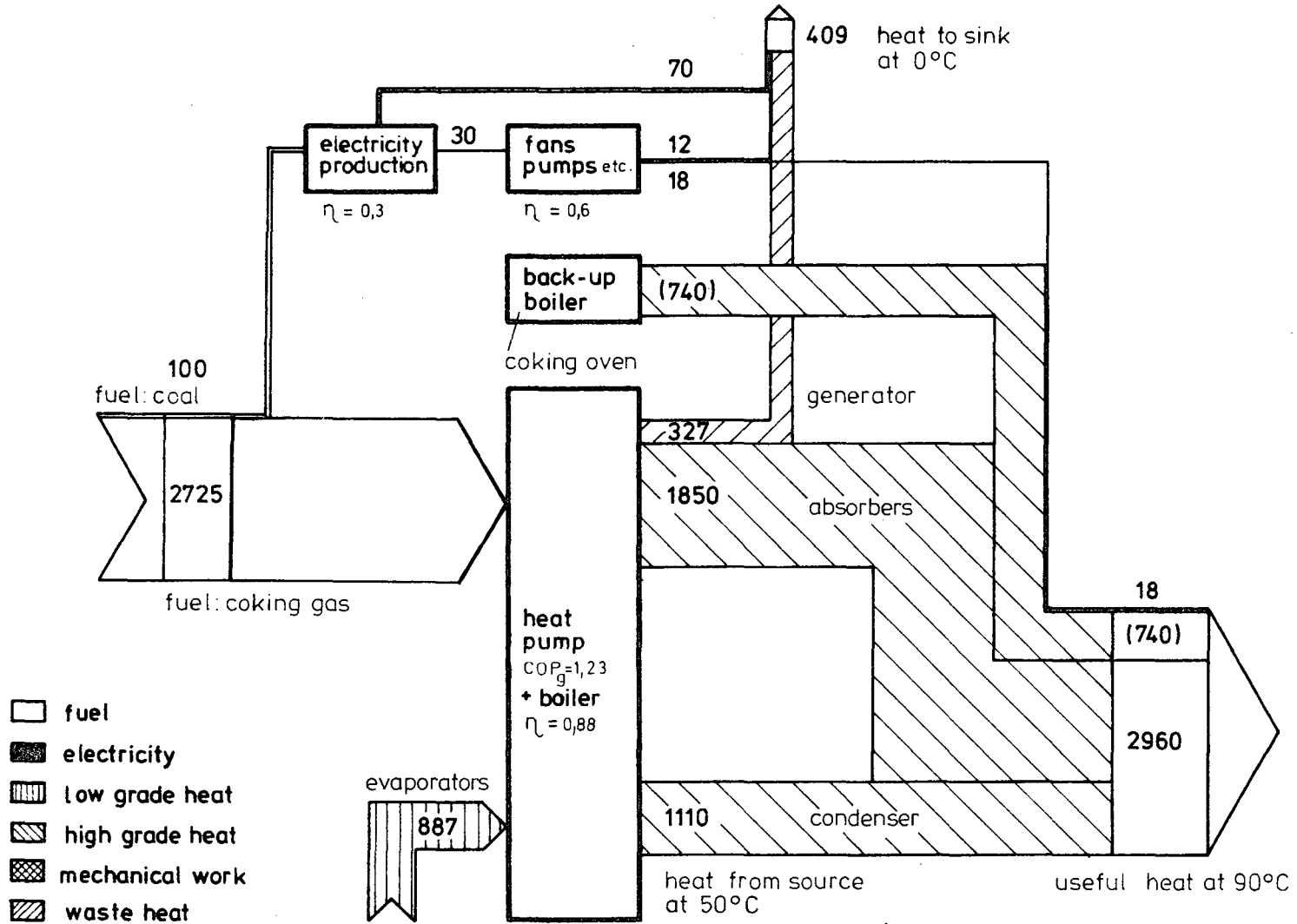

COP'_{eff} = 1,05 (incl. coking oven 1.32)

COP_{eff} = 1,08 (incl. coking oven 1.35)

SYSTEM TYPE: Diesel-Rankine, air source — Profile No 4

1. Description

Heat Pump	cycle:	reversed Rankine
	working fluid:	R12
	source:	ambient water
	sink:	water: feed 55 to 60°C, return 45 to 50°C for radiators
		feed 45°C, return 38 to 40°C for floor warming
Drive	cycle:	Diesel
	working fluid:	air
	fuel:	extra light fuel oil; 11·62 kWh/kg.
	use:	domestic central space and water heating

2. Design data

N_{hu}, heat output at +3 °C source temp.	15	kW
N_{hp}, heat input (including - % heater efficiency)	3.5	kW
N_{aux}, electrical input (fans, pumps, controls)	0.35	kW

3. Back-up:

type:	boiler
fuel:	oil
% max. capacity:	parallel operation 66 %; 34 % of total annual load.
	alternative operation 50 %; 50 % of total annual load.

4. Controls:

capacity:	motor speed control above 10°C source temperature
defrost:	hot gas, sensed by Δp across airside of evaporator
back-up:	cut-in at +3°C ambient air temperature.

5. Performance

air temp. °C	source temp. °C	heating/cooling output, N_{hu}, (kW)	heating/cooling	
			CoP_{eff}	CoP'_{eff}
- 10	-10	10.7	1.2	1.0
+ 3	+ 3	15	1.4	1.3
+ 10	+10	17.2	1.6	1.4
+ 25	not applicable			
+ 35				

6. Capital Costs*)

output, N_{hu} (kW)	3/4	10/12	15/20	50	100	400	≥ 2000
unit cost (DM)							
installed cost (DM)	-	7000	9000				

*) estimated costs at 1979 prices and exchange rates without taxes; not including heat distribution or back-up costs

7. Maintenance costs

.4 % of installed capital cost per annum

8. Service life in years

source equipment:	20
heat pump:	10
drive:	10
weighted mean:	12

9. Year of introduction: 1982

Profile No 4

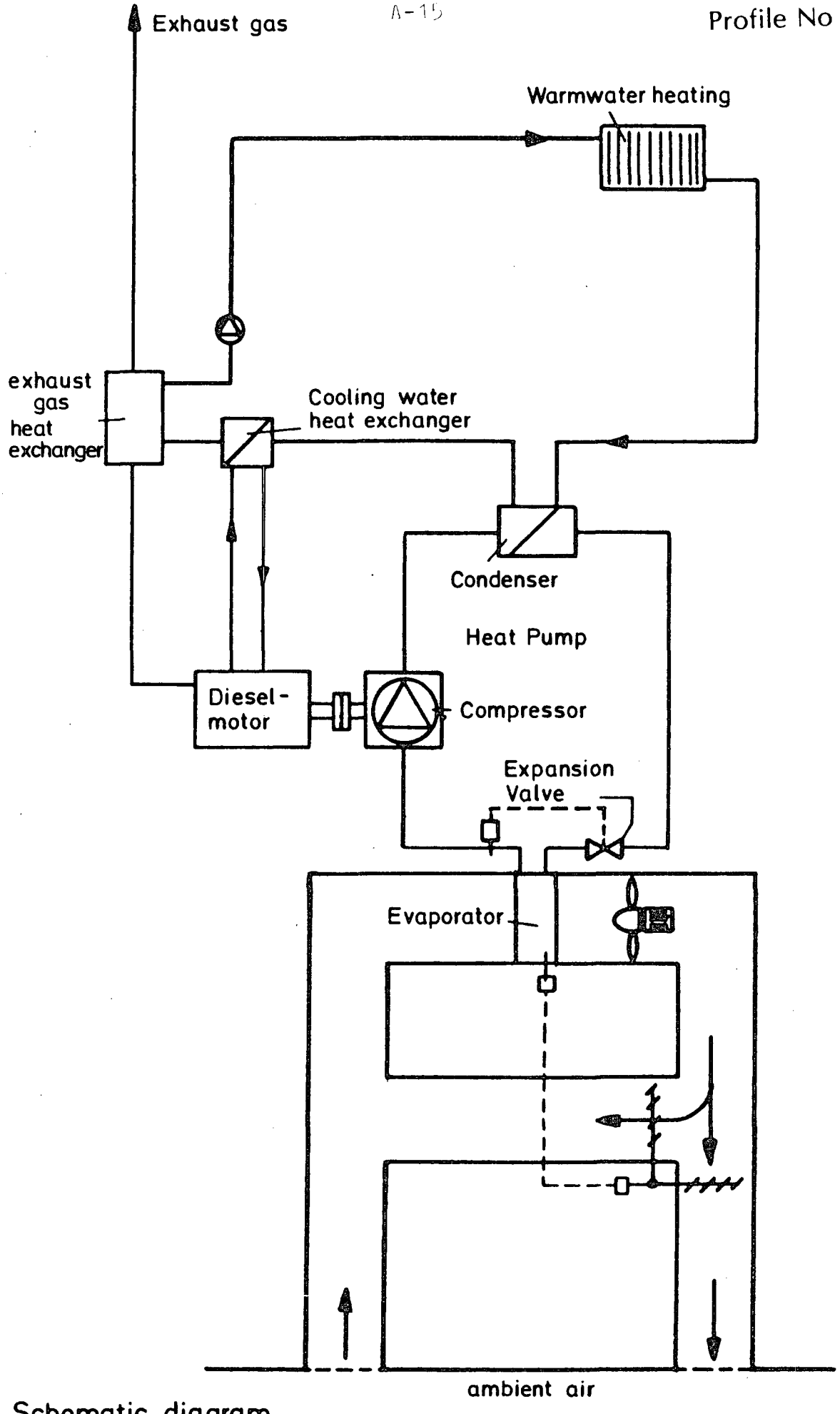

Schematic diagram

I. E. A. Study Advanced Heat Pump Systems.

Operating Characteristics of Advanced Heat Pump Systems

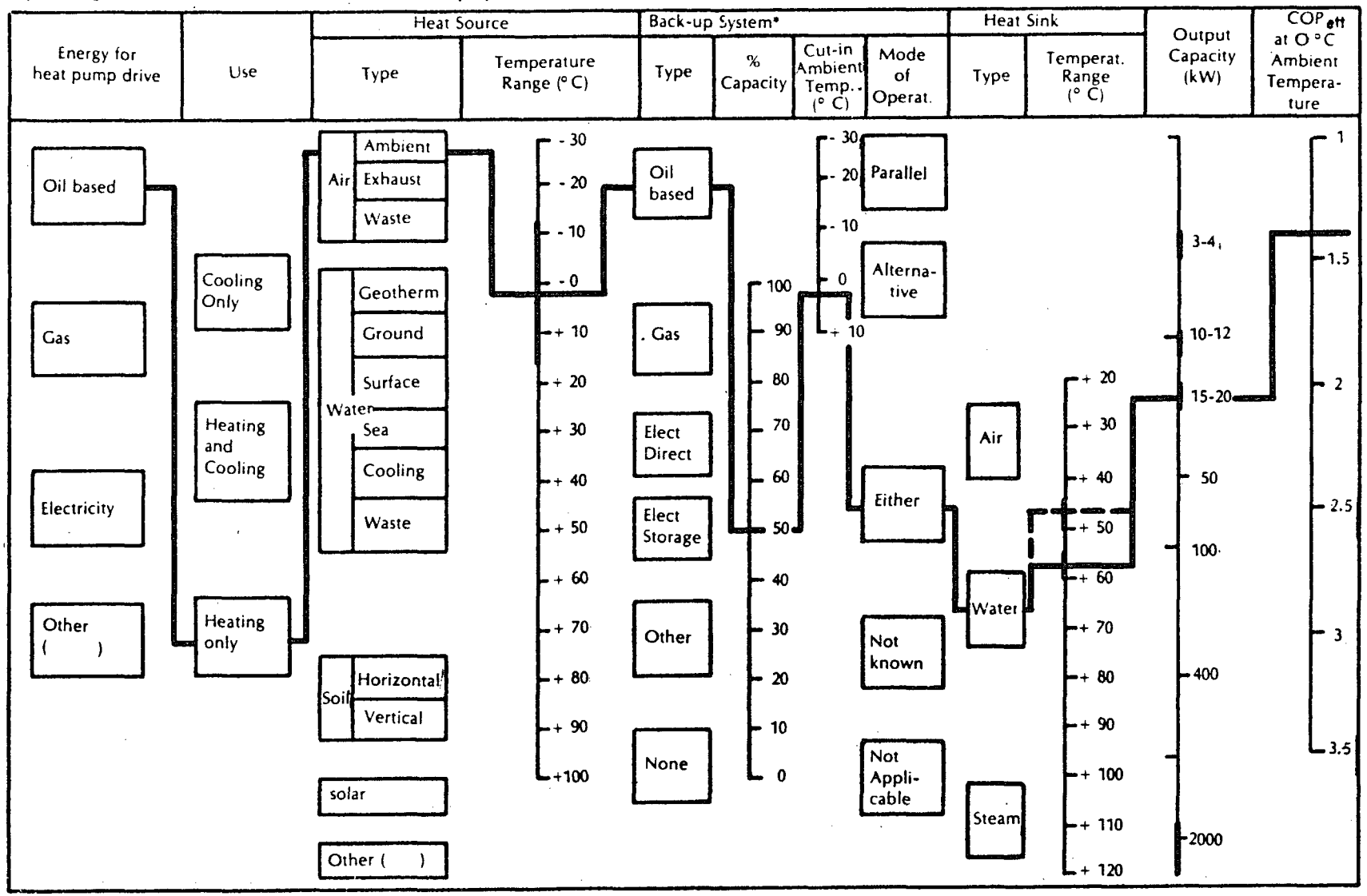

* Not emergency

Profile No 4

Profile No 4

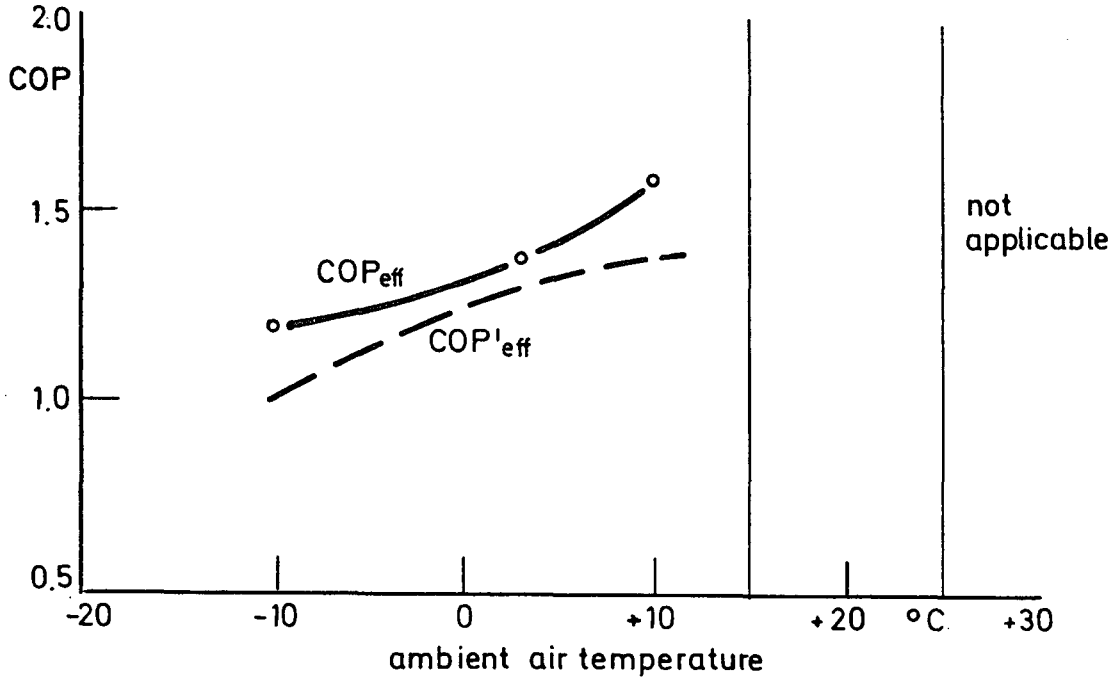
2.0
COP
1.5
1.0
0.5
COPeff
COP'eff
not applicable
-20
-10
0
+10
+20
°C
+30
ambient air temperature

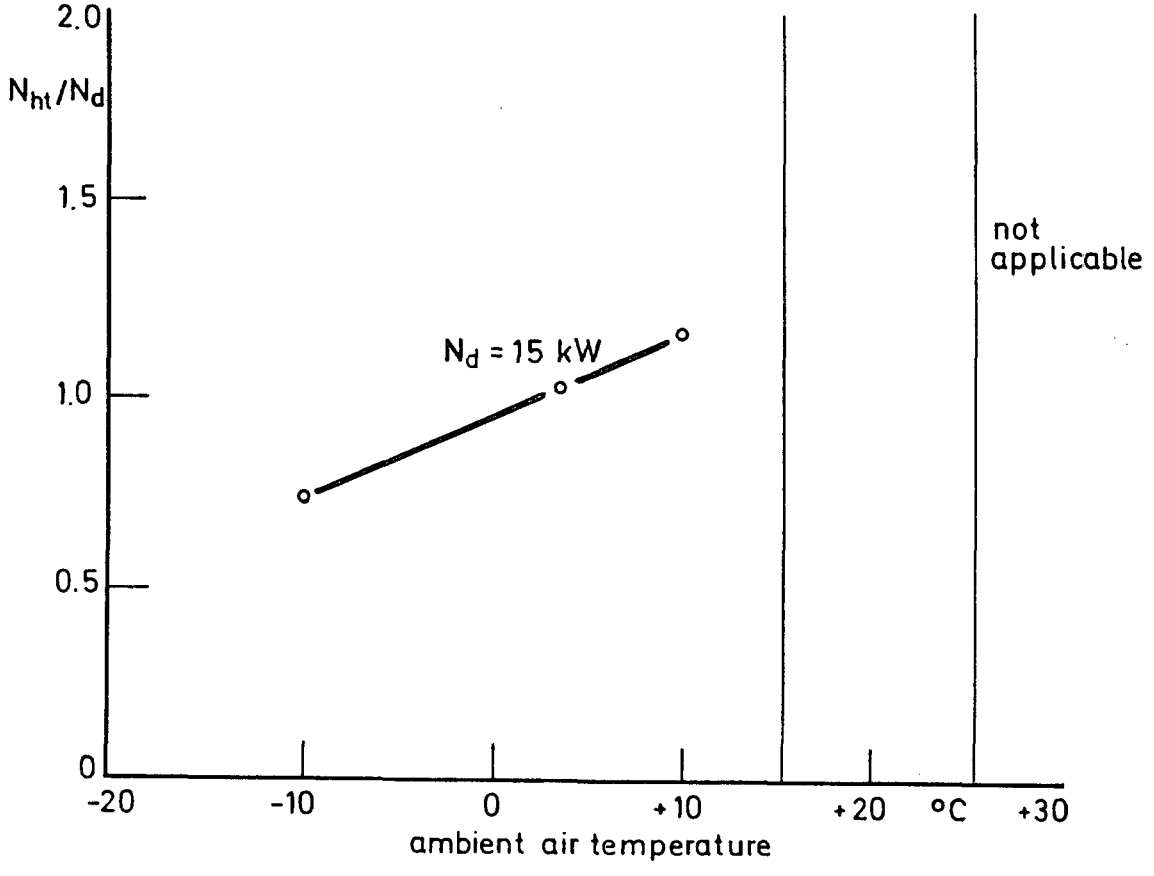
2.0
Nht/Nd
1.5
1.0
0.5
0
Nd = 15 kW
not applicable
-20
-10
0
+10
+20
°C
+30
ambient air temperature

Profile No. 4

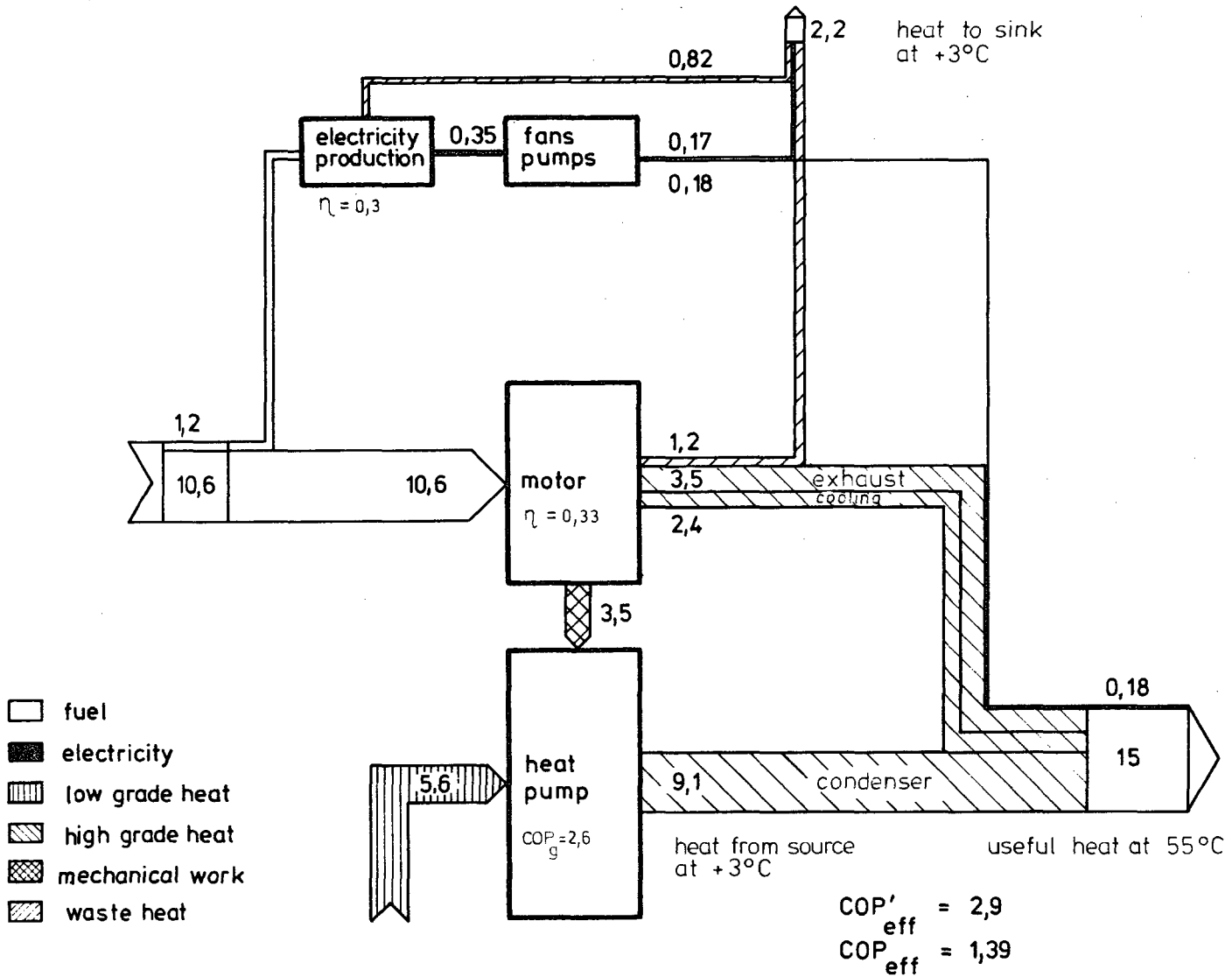
2,2
heat to sink
at +3°C
0,82
electricity
production
0,35
fans
pumps
0,17
0,18
η = 0,3
1,2
10,6
10,6
motor
η = 0,33
1,2
3,5
exhaust
cooling
2,4
3,5
0,18
15
heat
pump
COP_g = 2,6
5,6
9,1
condenser
heat from source
at +3°C
useful heat at 55°C
COP'_eff = 2,9
COP_eff = 1,39
fuel
electricity
low grade heat
high grade heat
mechanical work
waste heat

SYSTEM TYPE: Diesel-Rankine, horizontal ground source — Profile No 4 (a)

1. **Description**

Heat Pump cycle: reversed Rankine
working fluid: R22
source: horizontal ground coil, brine circuit
sink: water; feed at 45°C, return at 34°C

Drive cycle: Diesel
working fluid: air
fuel: Diesel oil or heavy fuel oil
use: school space heating; could also be district or commercial building heating

2. **Design data**

N_{hu}, heat output at +1°C source temp.	400	kW
N_{hp}, heat input (including - % heater efficiency)	90	kW
N_{aux}, electrical input (fans, pumps, controls)	9.2	kW

3. **Back-up:** type: district heating
fuel: heavy fuel oil and waste
% max. capacity: 125 ; 20 % of annual load.

4. **Controls:** capacity: speed reduction, compressor cylinder unloading
defrost: not necessary
back-up: cut-in at 0°C air temperature

5. **Performance**

air temp. °C	source temp. °C ground	source temp. °C brine	heating/cooling output, N_{hu}, (kW)	heating/cooling CoP_{eff}	heating/cooling CoP'_{eff}
- 10	+ 4	- 7		1.73	1.57 (.93)
0	+ 5	- 6	400 max.	1.73	1.57
+ 10	+10	+ 3		1.96	1.50
+ 25					
+ 35					

* includes district heating

6. **Capital Costs***)

output, N_{hu} (kW)	3/4	10/12	15/20	50	100	400	≥ 2000
unit cost (DM)						173,500	
installed cost (DM)						347,000	

*) estimated costs at 1979 prices and exchange rates without taxes; not including heat distribution or back-up costs

**) + DM 69,400 for district heating supply

7. **Maintenance costs**

2 % of installed capital cost per annum

8. **Service life in years**

source equipment: 25
heat pump: 10
drive: 10
weighted mean: 18

9. **Year of introduction:** 1980

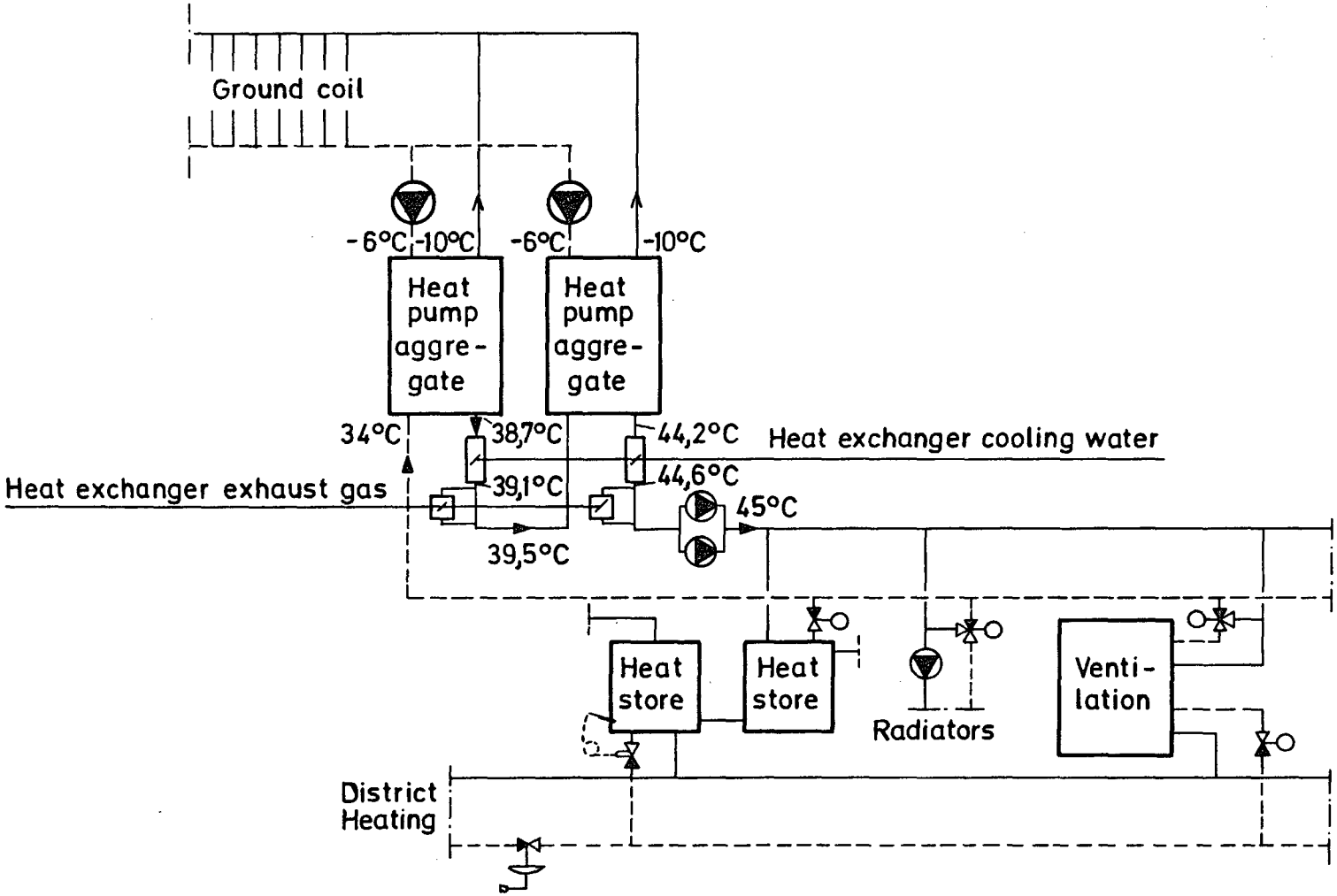

Schematic diagram

Profile No 4 a

I. E. A. Study Advanced Heat Pump Systems.

Operating Characteristics of Advanced Heat Pump Systems

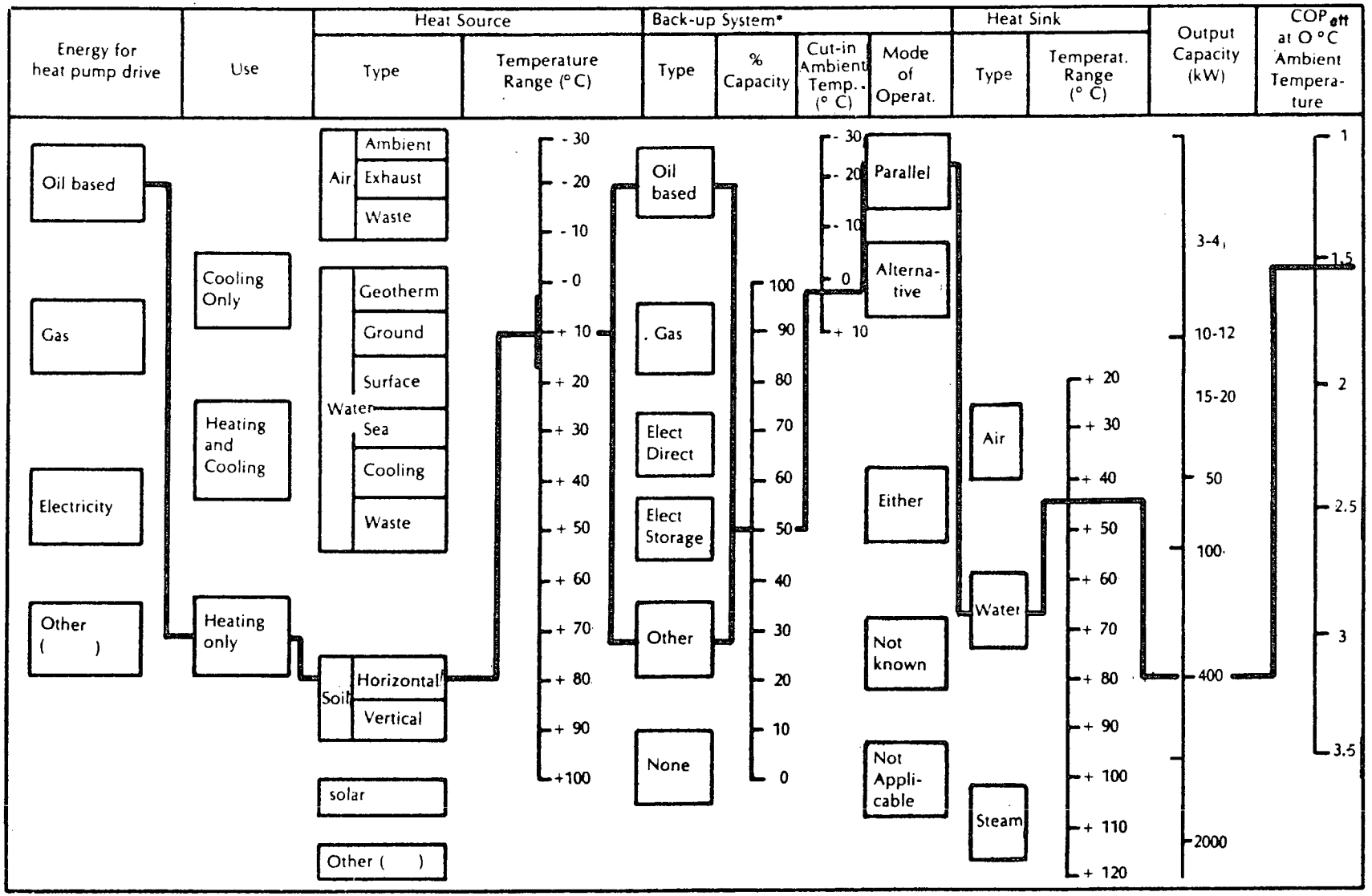

* Not emergency

Profile No 4 (a)

Profile No 4 a

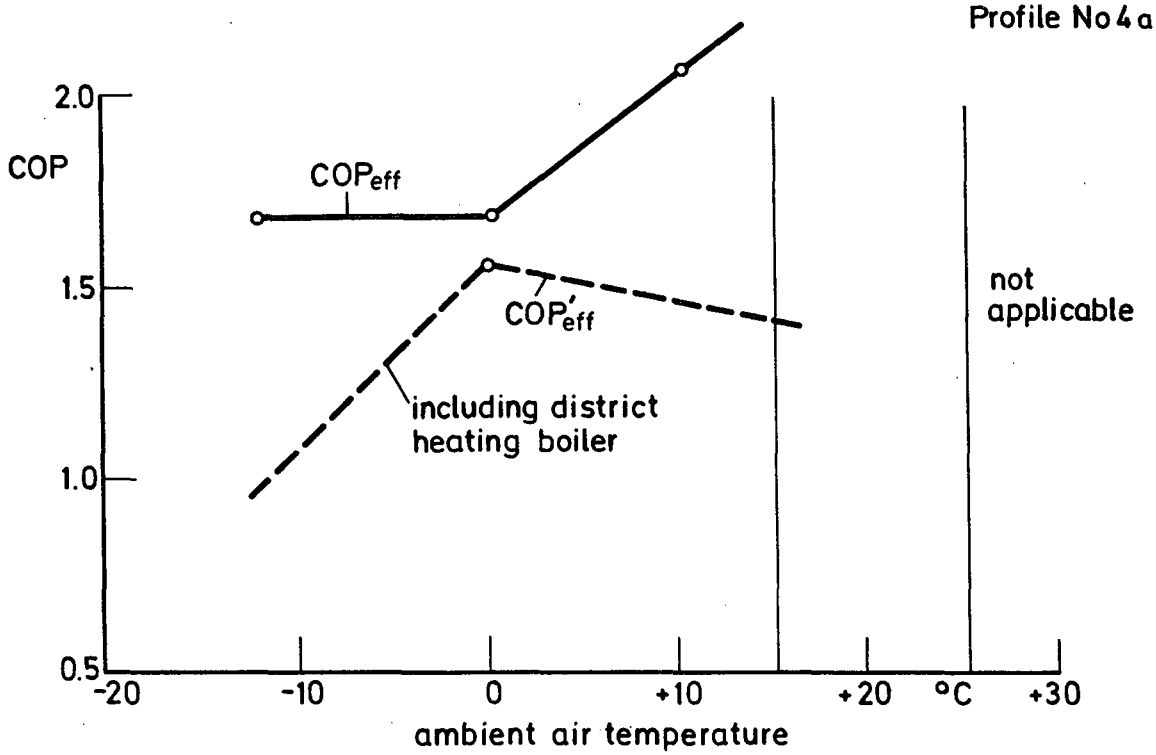

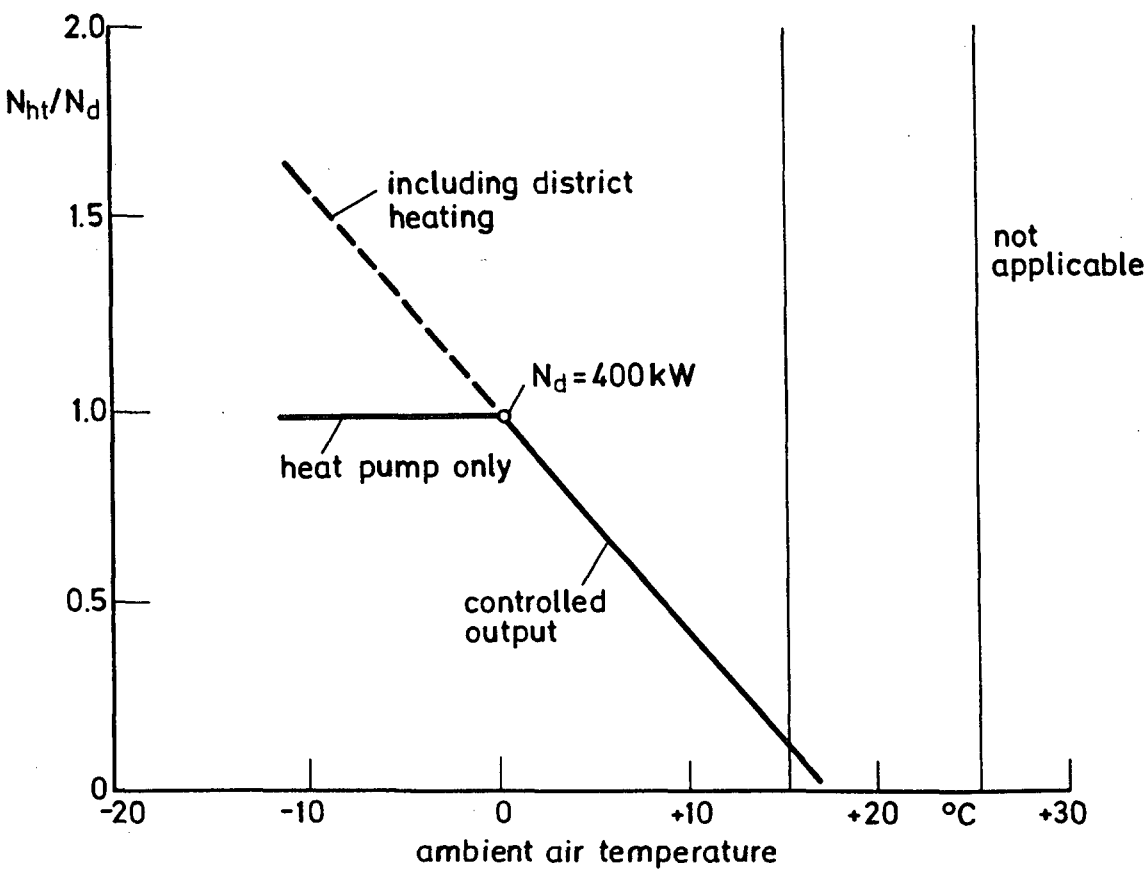

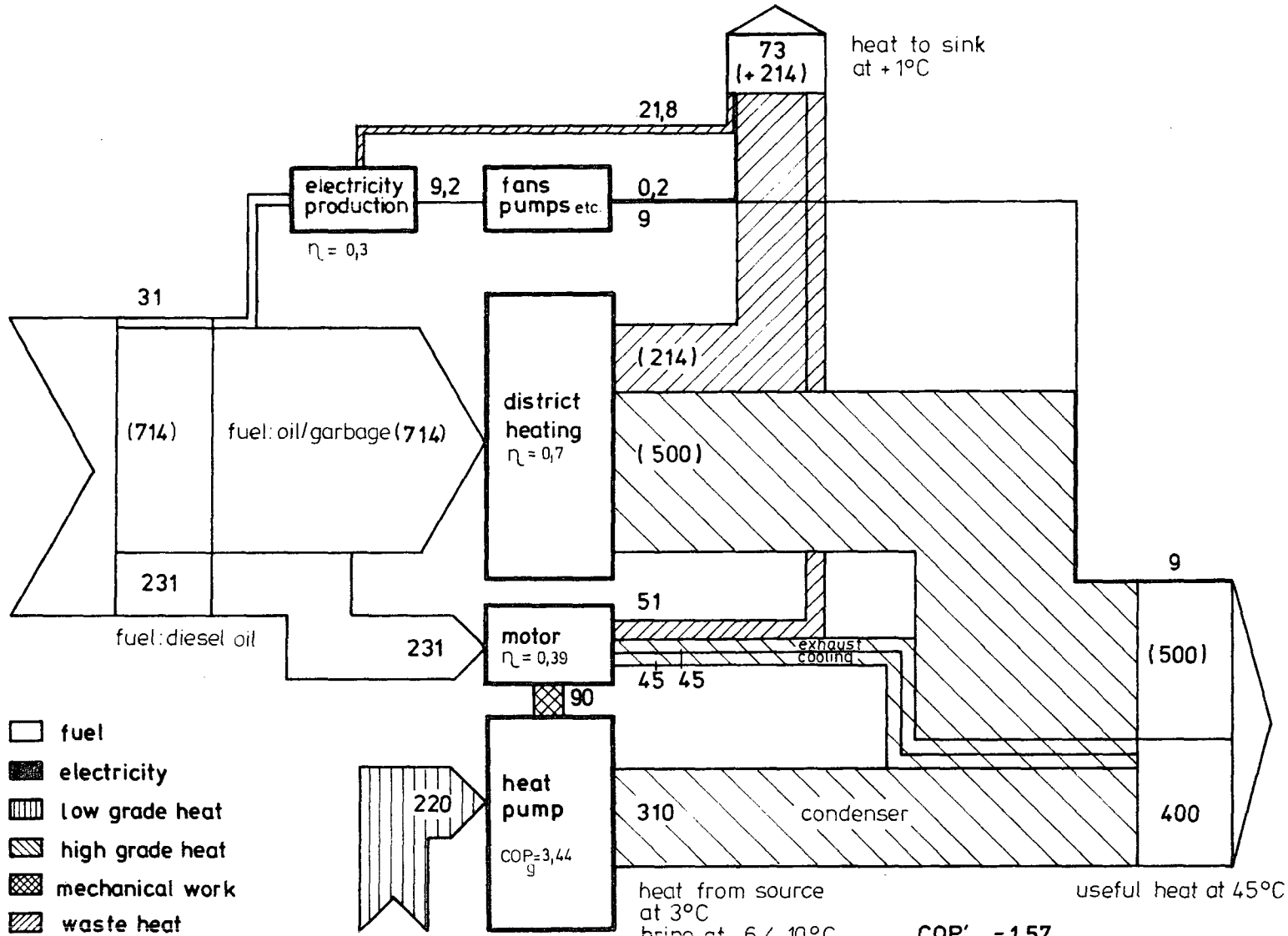

Profile No. 4a

SYSTEM TYPE: Diesel-Rankine Profile No 5

1. Description

Heat Pump cycle: Rankine, reciprocating compressor
working fluid: R12
source: air
sink: water (a) T_d = 57/80°C T_r = 38/60°C, (b) T_d = 45°C, T_r = 35°C

Drive cycle: diesel
working fluid: air
fuel: diesel oil
use: hot water central heating, district heating or commercial building heating and cooling

2. Design data

	(a)	(b)	
N_{hi}, heat output at 0 °C source temp.	816	174	kW
N_{hp}, heat input (including – % heater efficiency)	467	124	kW
N_{aux}, electrical input (fans, pumps, controls)	37	3	kW

3. Back-up:

	(a)	(b)
type:	boiler	none
fuel:	oil	-
% max. capacity:	50	-

4. Controls:
capacity: speed control and compressor capacity control
defrost: not known
back-up: not known

5. Performance

air temp. °C	source temp. °C (a)	source temp. °C (b)	heating/cooling output, N_{hi}, (kW) (a)	heating/cooling output, N_{hi}, (kW) (b)	heating/cooling CoP_{eff} (a)	heating/cooling CoP_{eff} (b)	heating/cooling CoP'_{eff} (a)	heating/cooling CoP'_{eff} (b)
– 10	– 10	– 10				1.6	1.6	1.
0	0	0	816	128	1.7	1.3	1.4	1.2
+ 10	+ 10	+ 10				1.1	1.2	
+ 25		+ 25		55		1.0		
+ 35		+ 35		55		0.8		

6. Capital Costs*)

output, N_{hi} (kW)	3/4	10/12	15/20	50	174 (b)	816 (a)	≥ 2000
unit cost (DM)					133,332	200,000	
installed cost (DM)					177,777		

*) estimated costs at 1979 prices and exchange rates without taxes; not including heat distribution or back-up costs

7. Maintenance costs
(a) 13 (includes replacement motor every 10,000 hrs)
(b) 6 % of installed capital cost per annum

8. Service life in years

source equipment:	20
heat pump:	15
drive:	10
weighted mean:	15

9. Year of introduction: before 1985

Profile No 5 a

Schematic diagram not available

Profile No 5 b

Water: heat distribution circuit

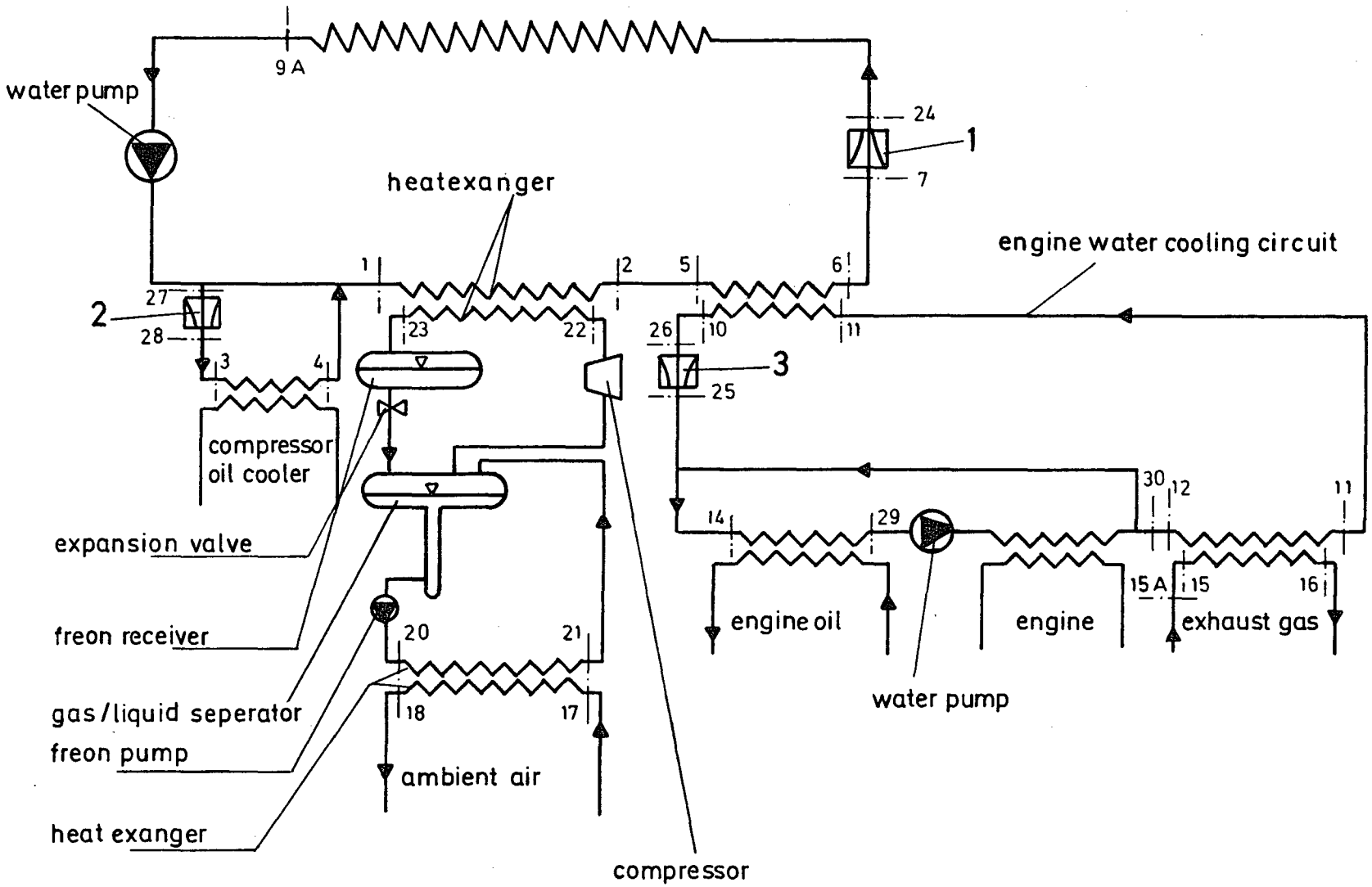

I. E. A. Study Advanced Heat Pump Systems.

Operating Characteristics of Advanced Heat Pump Systems

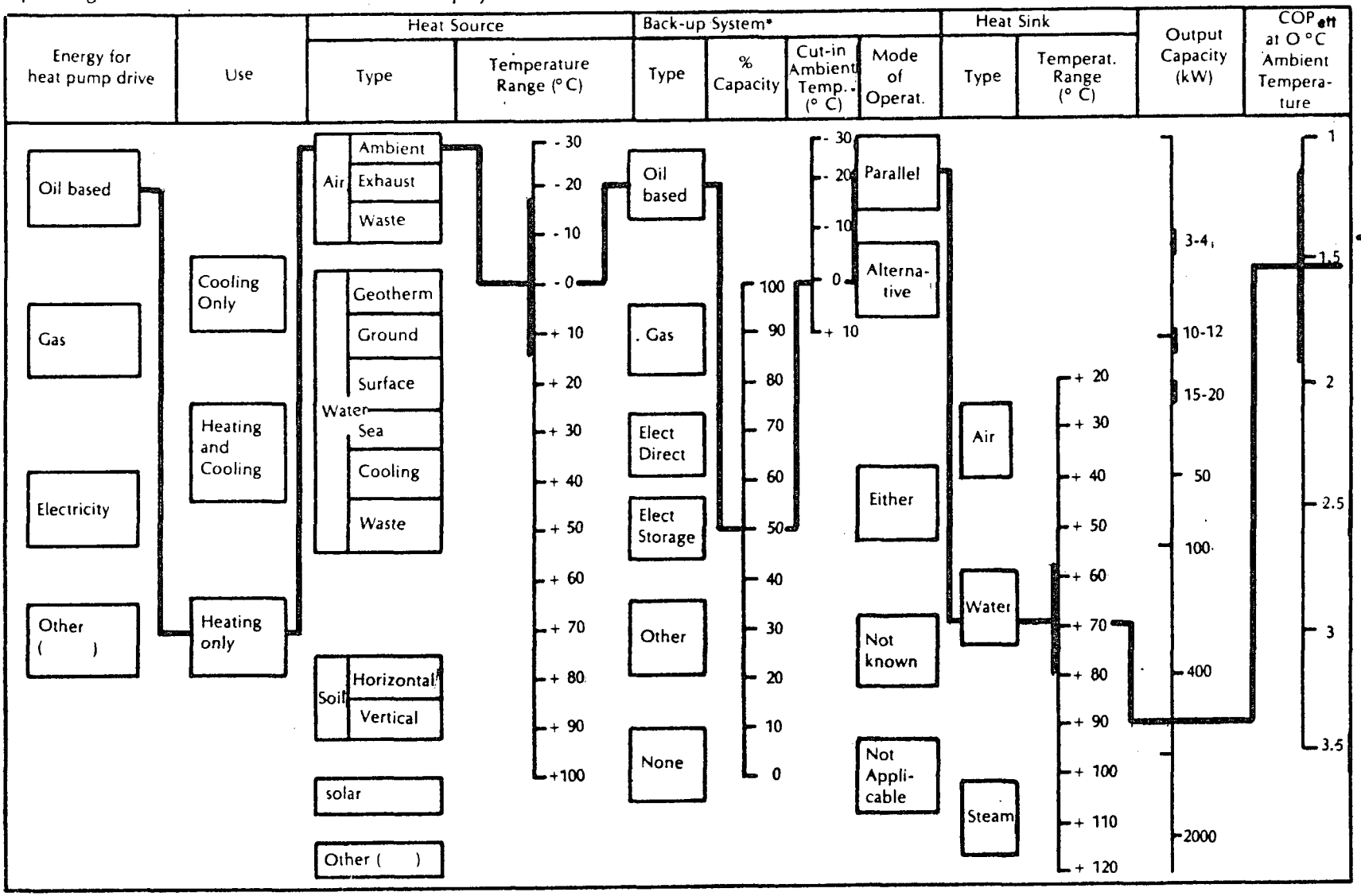

* Not emergency

Profile No 5 a

I. E. A. Study Advanced Heat Pump Systems.

Operating Characteristics of Advanced Heat Pump Systems

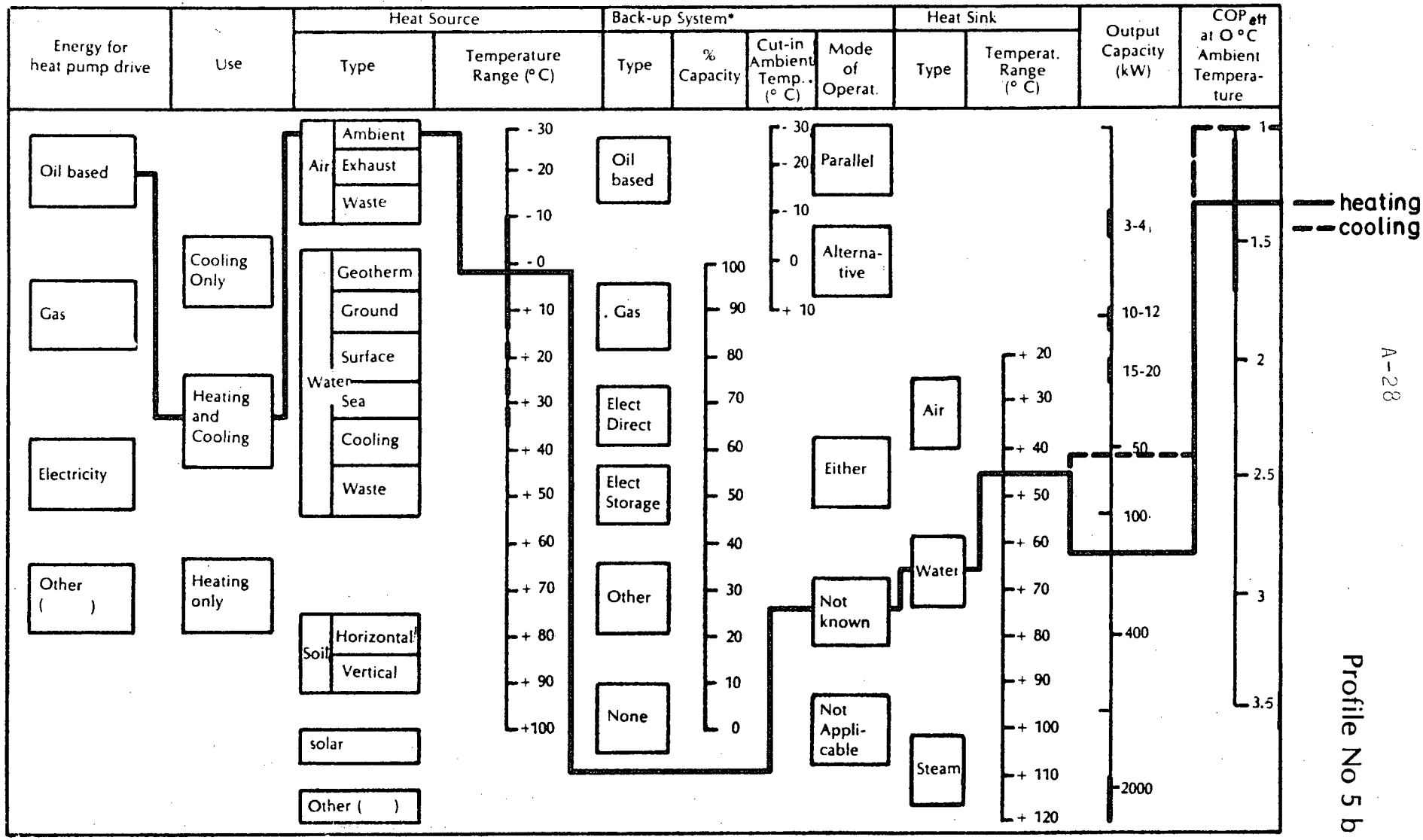

* Not emergency

A-28

Profile No 5 b

Profile No 5 a

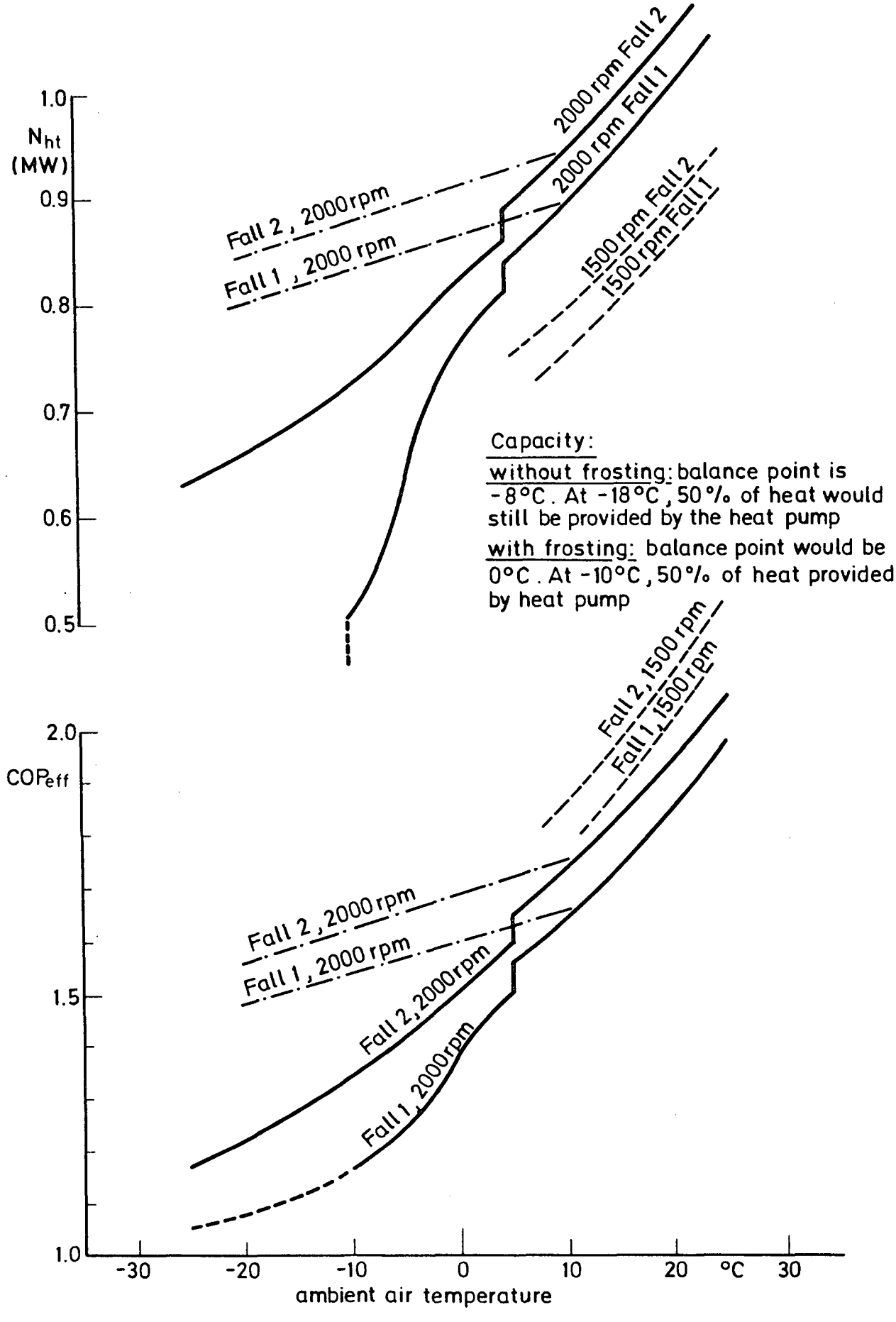

Profile No 5 b

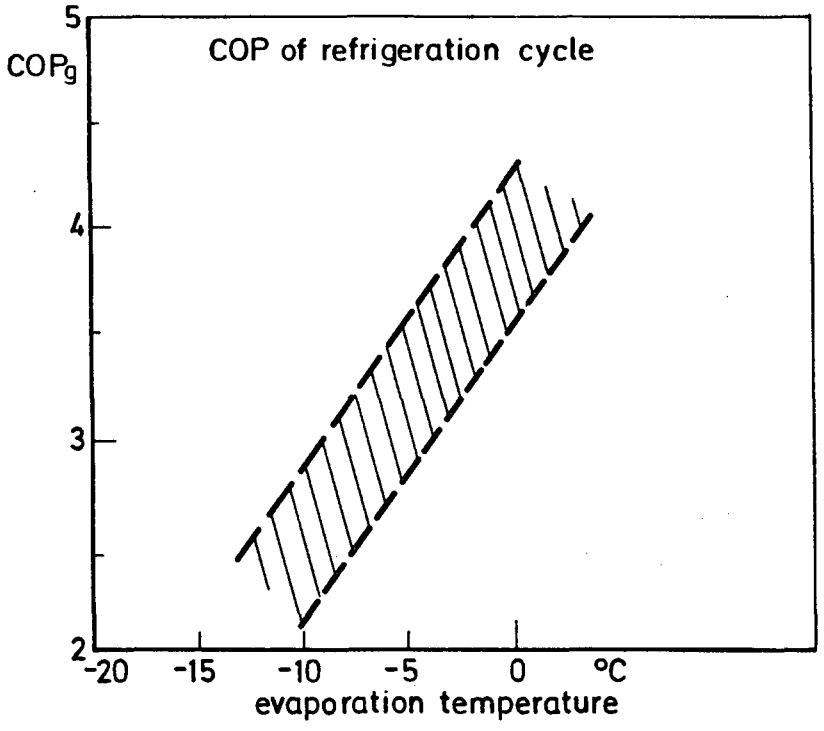

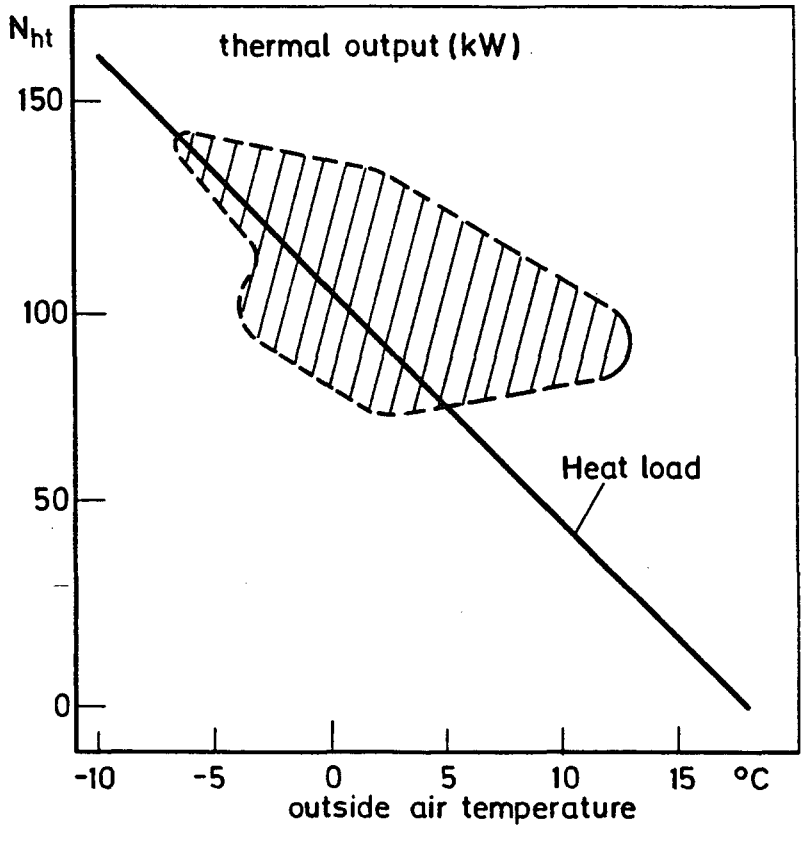

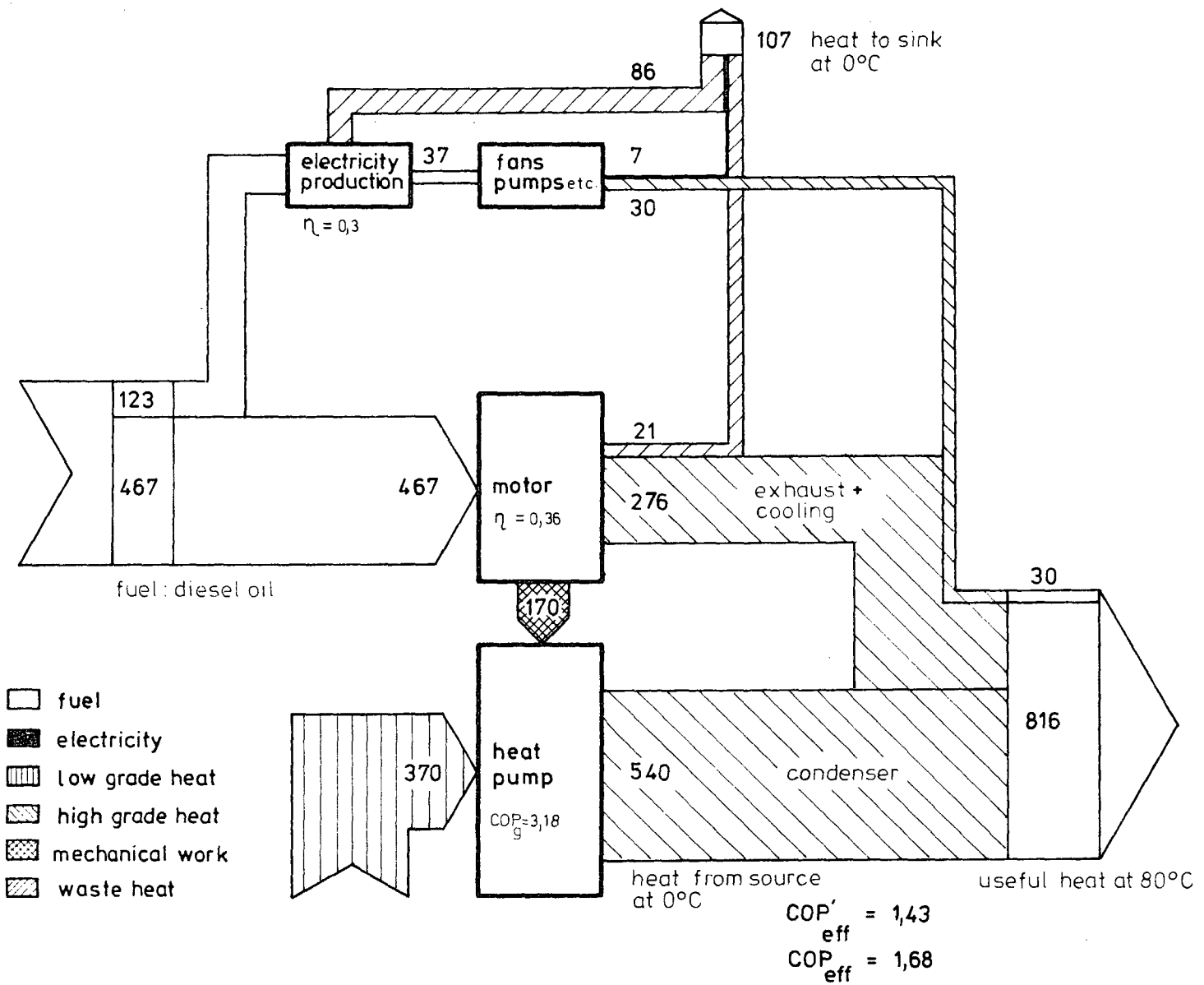

Profile No.5a

Profile No.5 b

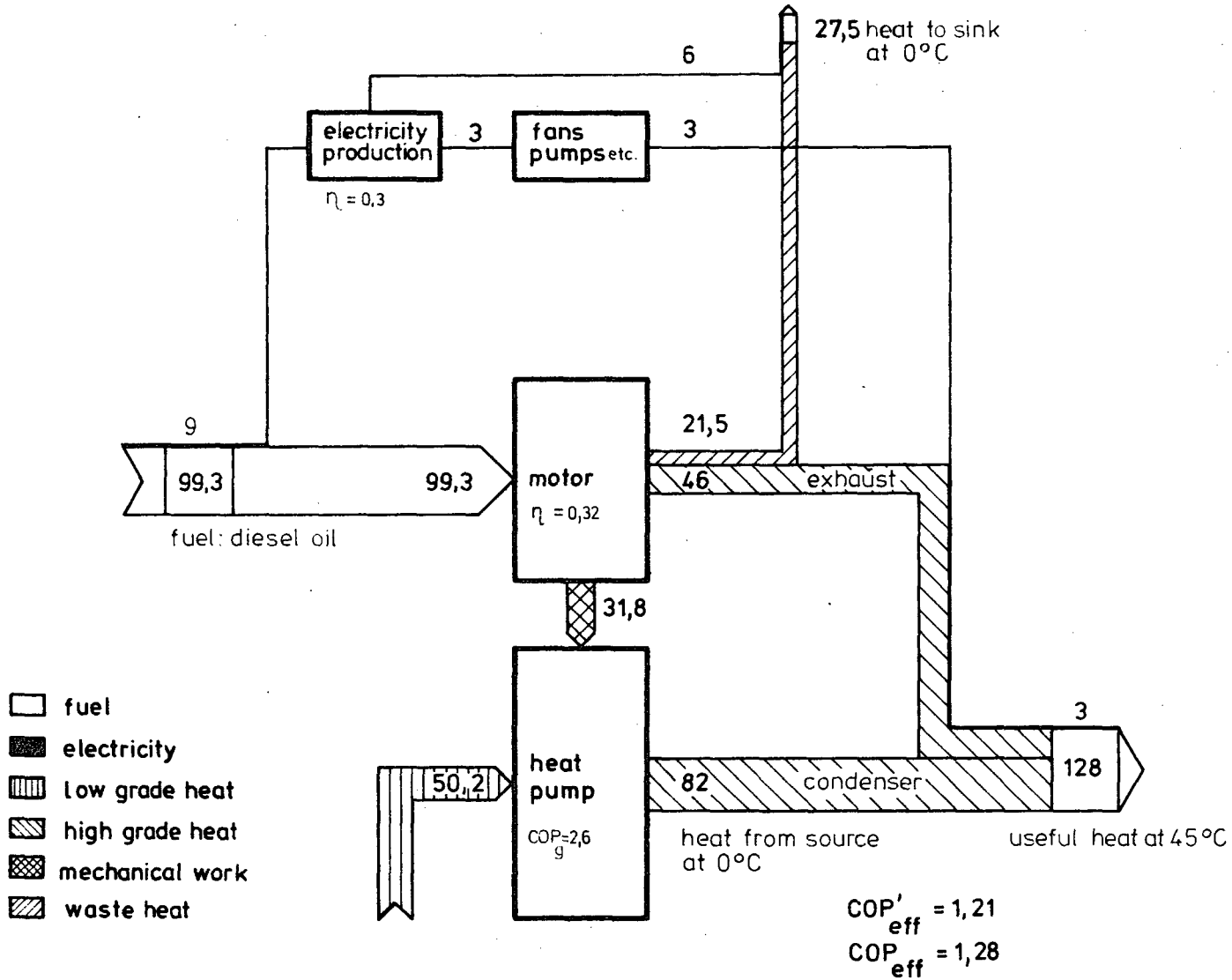

SYSTEM TYPE: Diesel-Rankine

Profile No 6

1. Description

Heat Pump cycle: Rankine, two-stage turbo compressor
working fluid: R 114
source: sewage $T_{min} = 7^0C$, $T_{max} = 18^0C$
sink: district heating water, $T_{feed} = 90^0C$, $T_{return} = 50^0C$

Drive cycle: Diesel
working fluid: air
fuel: heavy fuel oil
use: district heating

2. Design data

N_{ht}, heat output at 10 °C source temp.	10,200	kW
N_{hp}, heat input (including % heater efficiency)	5,500	kW
N_{aux}, electrical input (fans, pumps, controls)		kW

3. Back-up:

type: district heating
fuel: -
% max. capacity: -

4. Controls:

capacity: not known
defrost: not necessary
back-up: district heating parallel operation

5. Performance

air temp. °C	source temp. °C	heating/cooling output, N_{ht}, (kW)	heating/cooling	
			CoP_{eff}	CoP'_{eff}
- 10	7		1.8	not known
0	7.5		1.8	
+ 10	8 - 16		2.0	
+ 25				
+ 35				

6. Capital Costs*)

10,000

output, N_{ht} (kW)	3/4	10/12	15/20	50	100	400	≥ 2000
unit cost (DM)							
installed cost (DM)							5.2×10^6

*) estimated costs at 1979 prices and exchange rates without taxes; not including heat distribution or back-up costs

7. Maintenance costs

4 % of installed capital cost per annum

8. Service life in years

source equipment: 20
heat pump: 20
drive: 20
weighted mean: 20

9. Year of introduction: 1981

Profile No6

1. Gear
2. Gear oil
3. Lub oil I
4. Lub oil II
5. Scav. air
6. Scav. air
7. Turbocharger
8. Subcooler
9. Condenser
10. EX-3
11. EX-2
12. EX-1

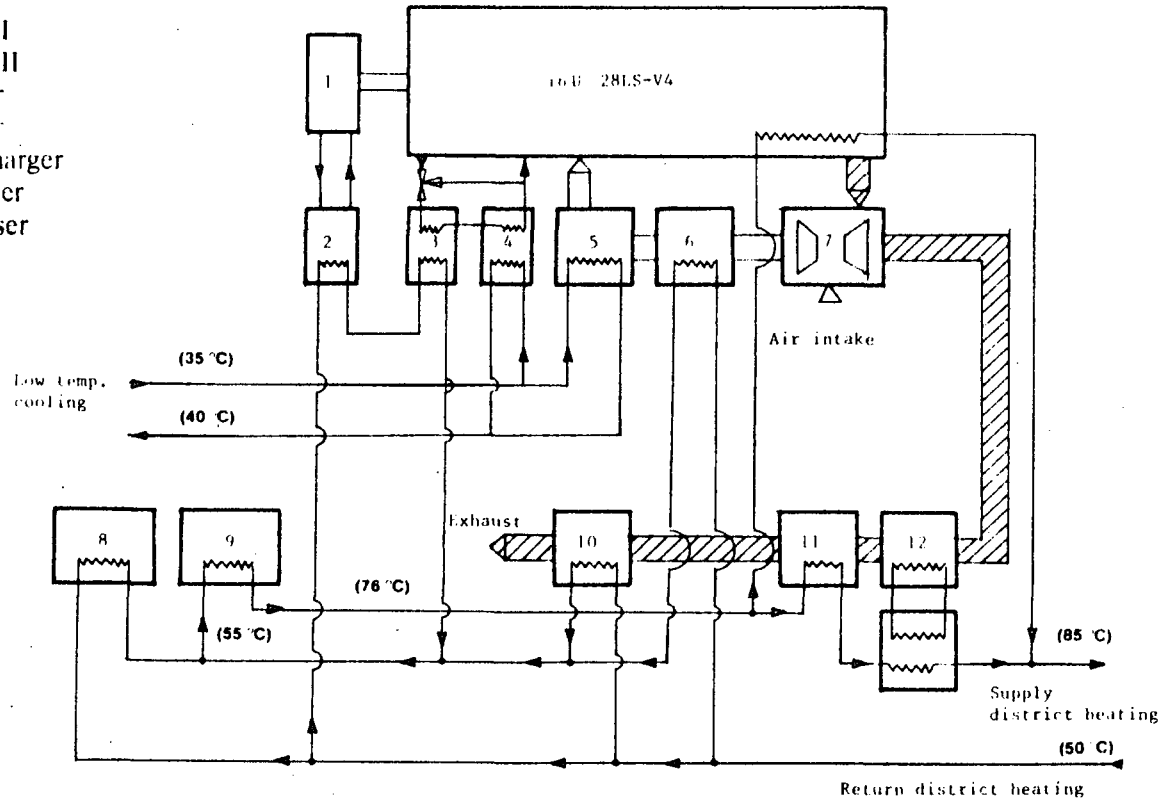

Engine with heat recovery system and coupling to the heat pump.

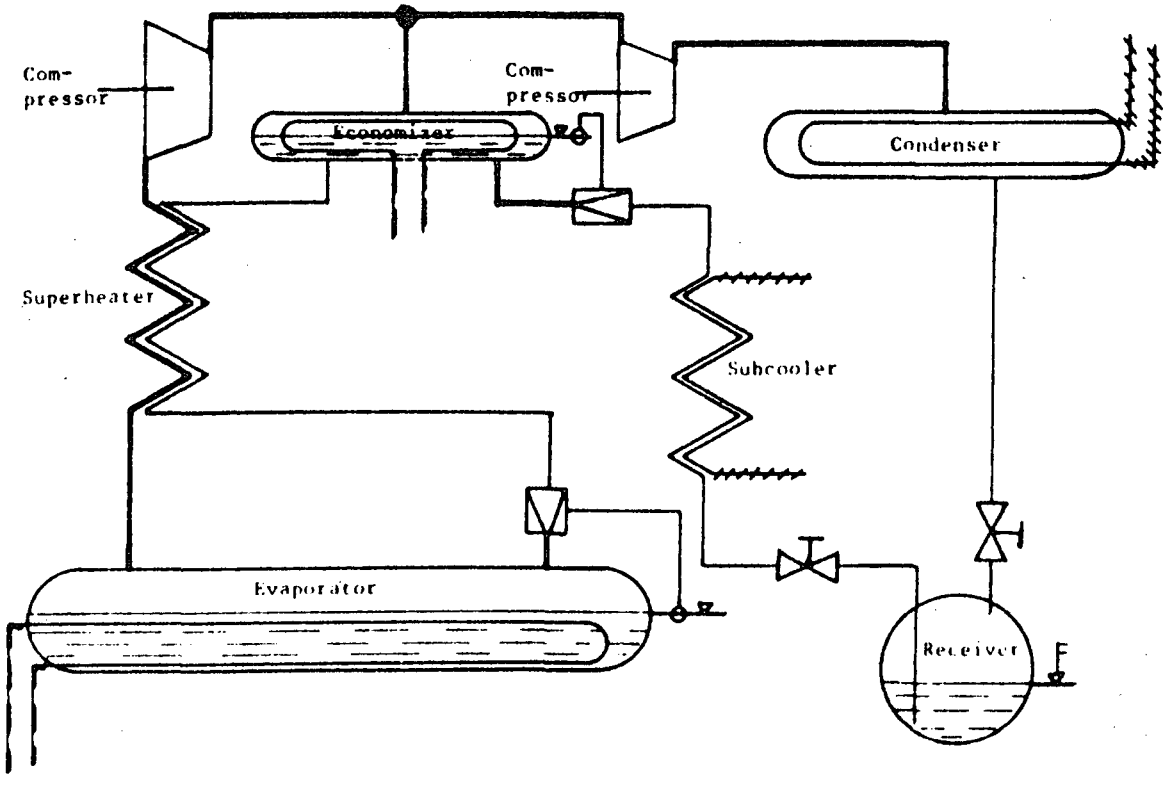

Heat pump system diagram.

I. E. A. Study Advanced Heat Pump Systems.

Operating Characteristics of Advanced Heat Pump Systems

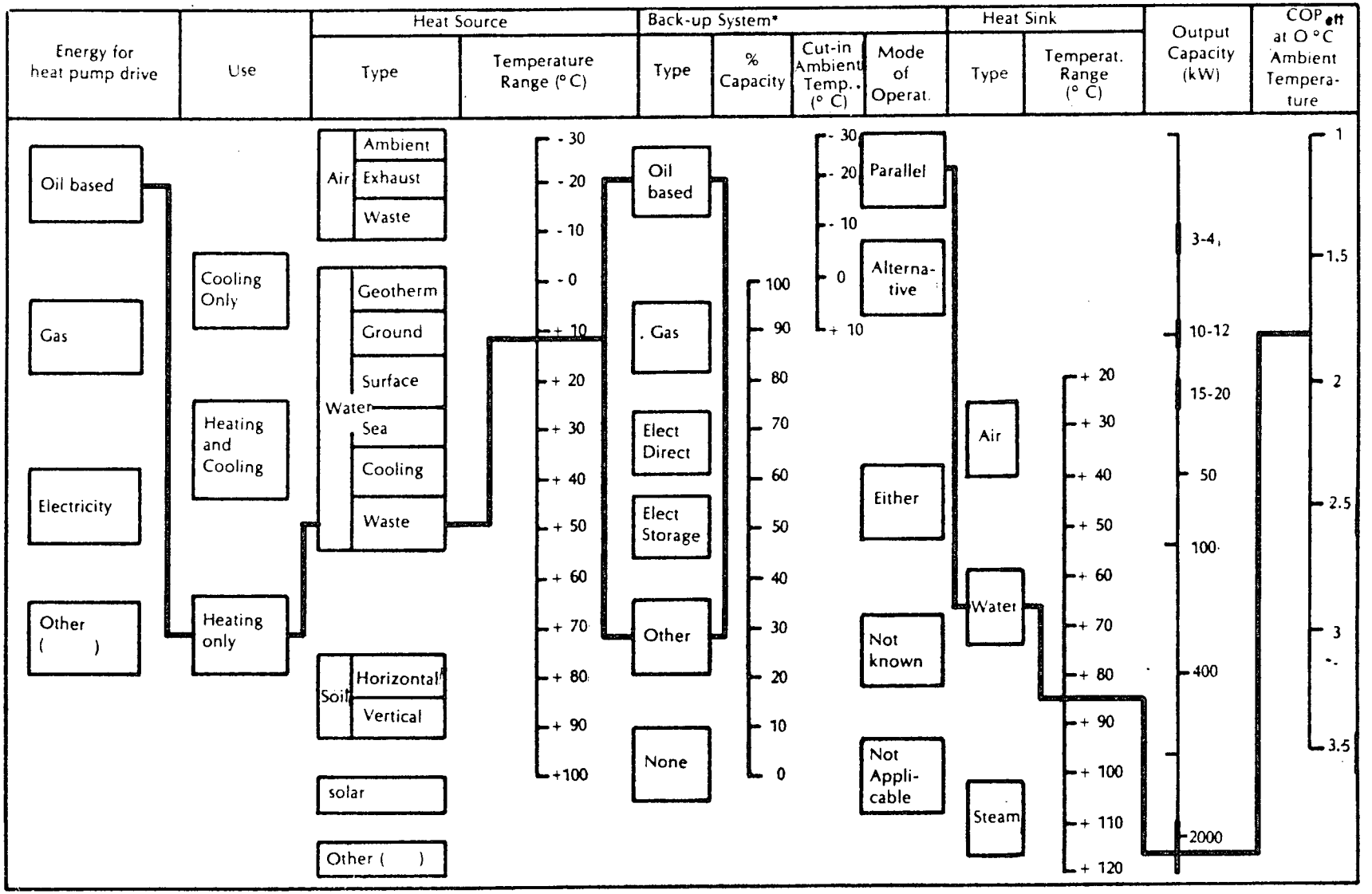

* Not emergency

Profile No.6

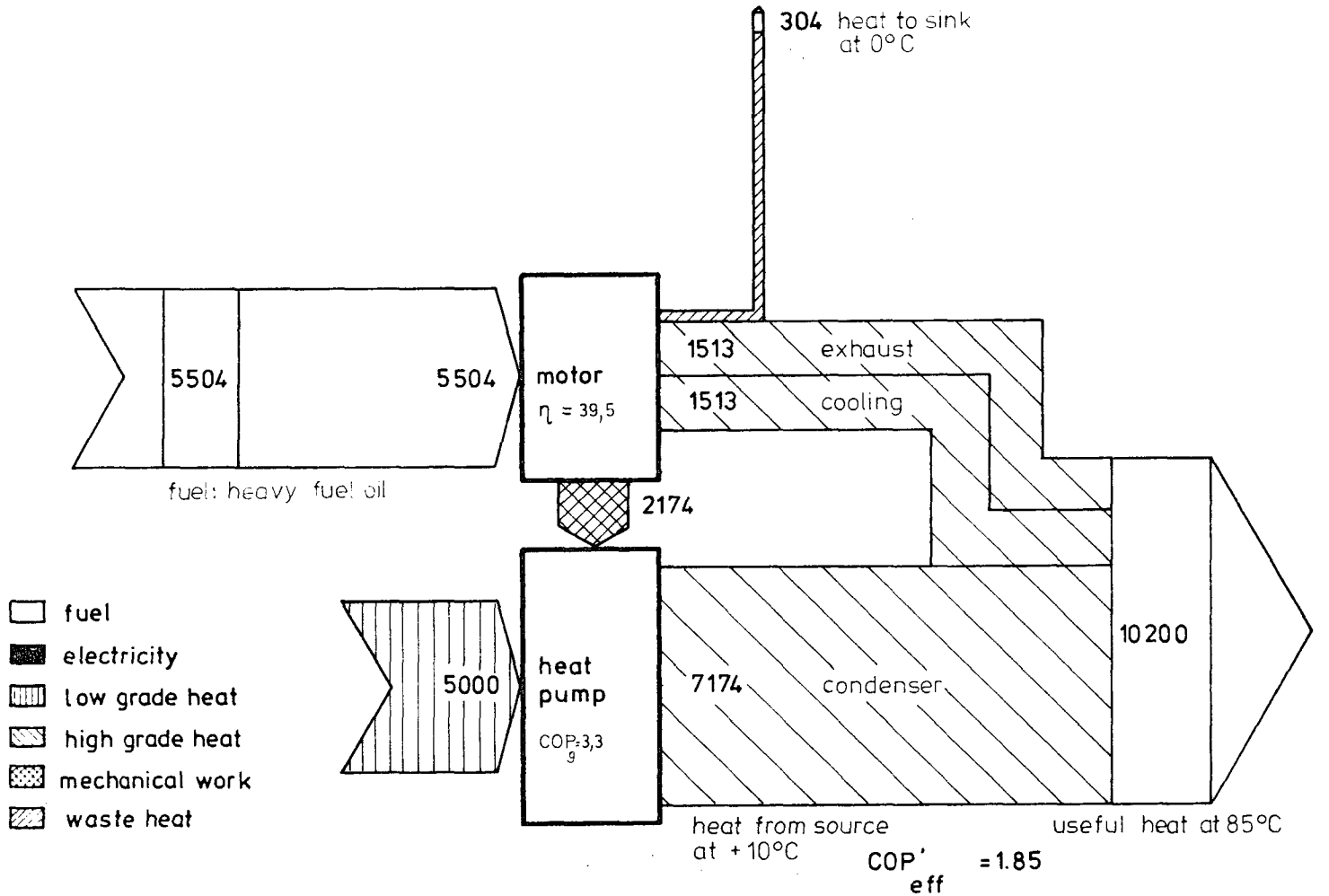
304 heat to sink at 0°C
5504
5504
fuel: heavy fuel oil
motor
η = 39,5
1513
exhaust
1513
cooling
2174
5000
heat pump
COP_g=3,3
7174
condenser
10200
heat from source at +10°C
useful heat at 85°C
COP'eff = 1.85
fuel
electricity
low grade heat
high grade heat
mechanical work
waste heat

SYSTEM TYPE: Otto-Rankine

Profile No 7

1. Description

Heat Pump	cycle:	Rankine, reciprocating compressor
	working fluid:	R22 (or R12 for higher distribution temperatures)
	source:	air (or water)
	sink:	water (a) R22: T_r = 48°C max. T_d = 80 % at 45/55°C, 20 % at 90°C; or all at 70°C max.
		(b) R12: T_r = 55°C max. T_d = 80 % at 55/65°C, 20 % at 90°C; or all at 75°C max.
Drive	cycle:	Otto
	working fluid:	air
	fuel:	natural gas
	use:	domestic and commercial central space and water heating

2. Design data

		air cooled engine	
N_{hi}, heat output at +10° C source temp.	11.8	8.8	kW
N_{hp}, heat input (including – % heater efficiency)		8.9	kW
N_{aux}, electrical input (fans, pumps, controls)		0.25	kW

3. Back-up:

type:	boiler: if system is sized for less than maximum load
fuel:	gas
% max. capacity:	up to 100

4. Controls:

capacity:	engine speed
defrost:	not known
back-up:	not known: probably external air temperature

5. Performance

air temp. °C	source temp. °C	heating/cooling output, N_{hi}, (kW) (a)	(b)	heating/cooling CoP_{eff} (a)	(b)	heating/cooling CoP'_{eff} (a)	(b)
– 10	– 10	8.5	9.0	0.93	0.60	0.88	0.57
0	0	9.6	6.6	1.1	0.72	0.99	0.67
+ 10	+ 10	12.0	5.5	1.31	0.98	1.24	0.93
+ 25 + 35	not applicable						

(a) engine water cooled: only available large sizes 100 kW output
(b) engine air cooled: only available small sizes 100 kW output

6. Capital Costs*)

actual	9.4	11.8	15.3	46	103	386	
output, N_{hi} (kW) nom	3/4	10/12	15/20	50	100	400	≥ 2000
unit cost (DM)	14,233	14,909	17,864	27,031	47,985	117,065	–
installed cost (DM)	not known						

*) estimated costs at 1979 prices and exchange rates without taxes; not including heat distribution or back-up costs

7. Maintenance costs

4 % of installed capital cost per annum

8. Service life in years

source equipment:	20
heat pump:	20
drive:	10
weighted mean:	15

9. Year of introduction: 1980

Profile No 7

Schematic diagram not available

I. E. A. Study Advanced Heat Pump Systems.

Operating Characteristics of Advanced Heat Pump Systems

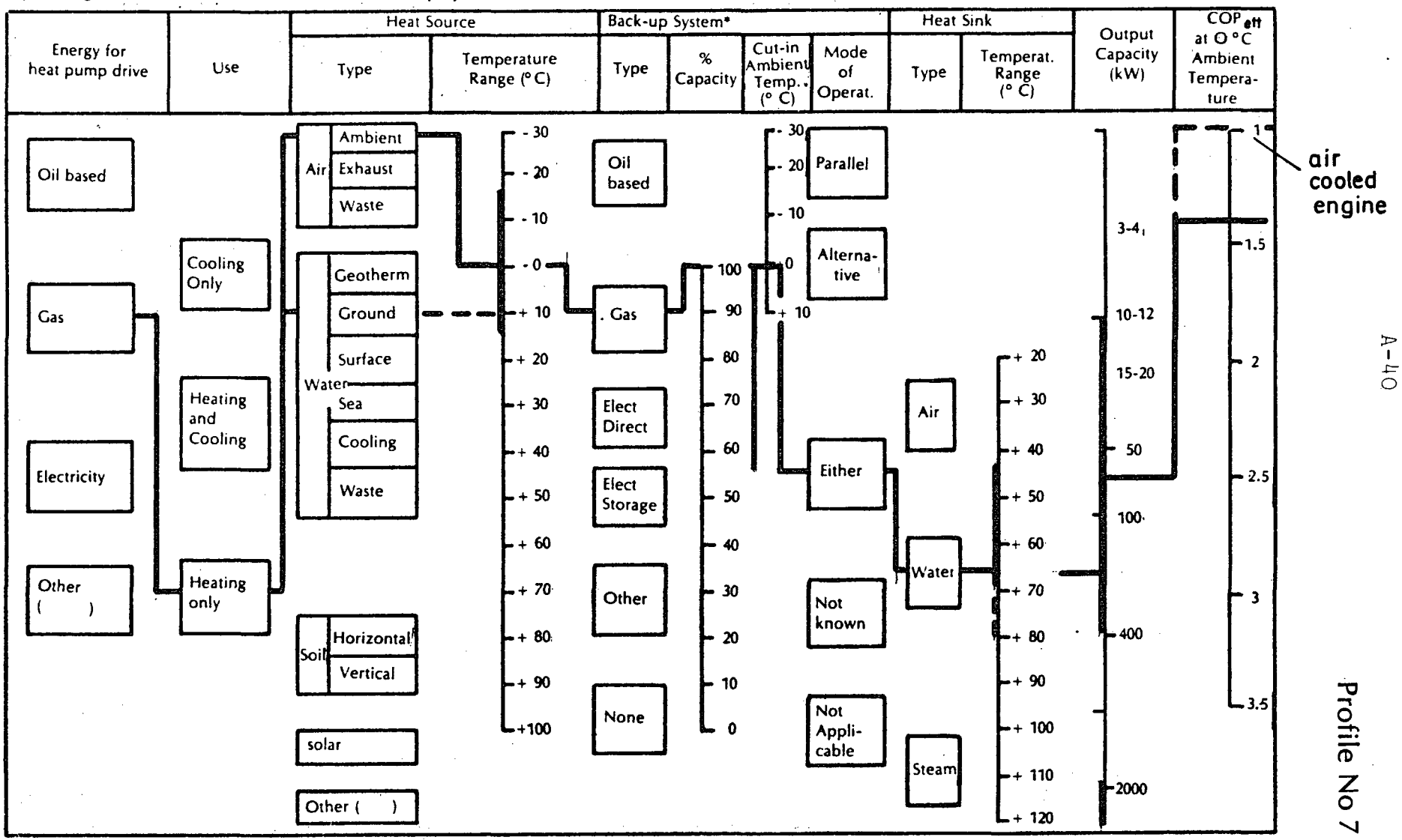

* Not emergency

Profile No 7

Profile No 7

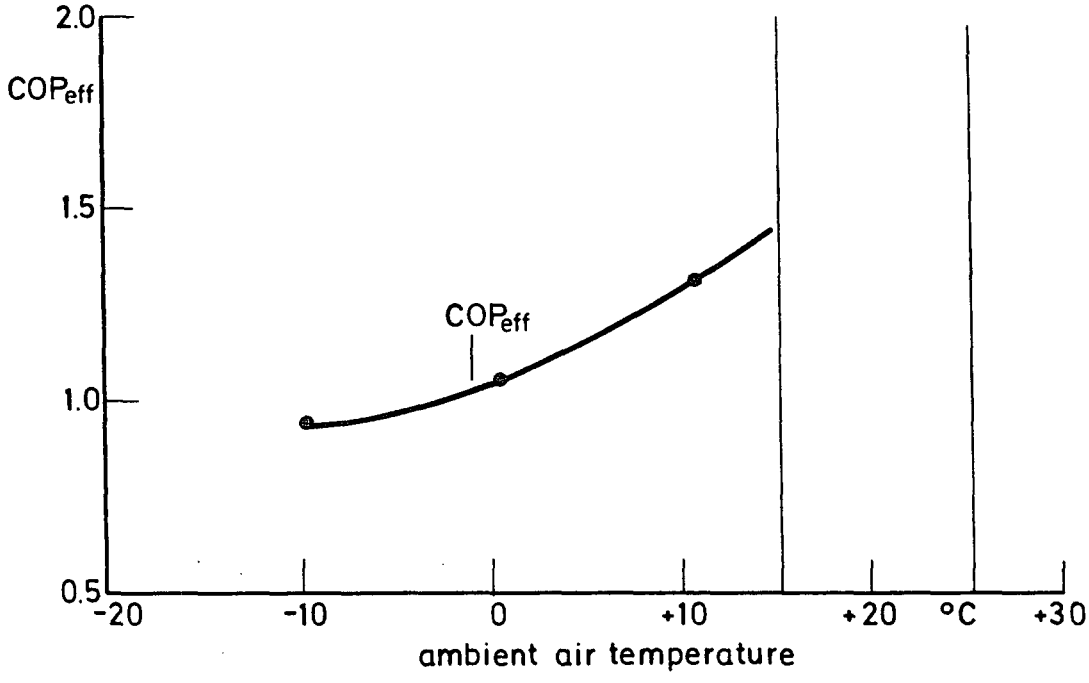
2.0
COPeff
1.5
1.0
0.5
COPeff
-20
-10
0
+10
+20
°C
+30
ambient air temperature

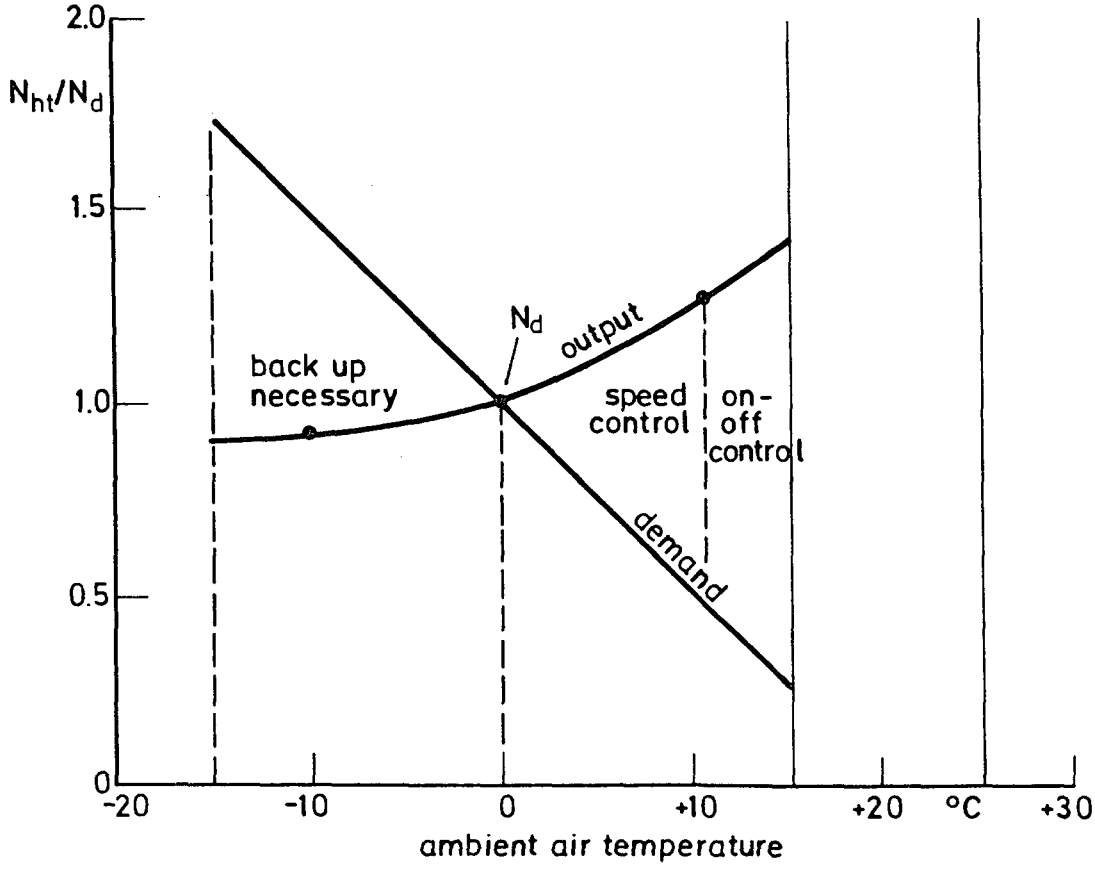
2.0
Nht/Nd
1.5
1.0
0.5
0
Nd
output
back up
necessary
speed
control
on-
off
control
demand
-20
-10
0
+10
+20
°C
+30
ambient air temperature

Profile No. 7

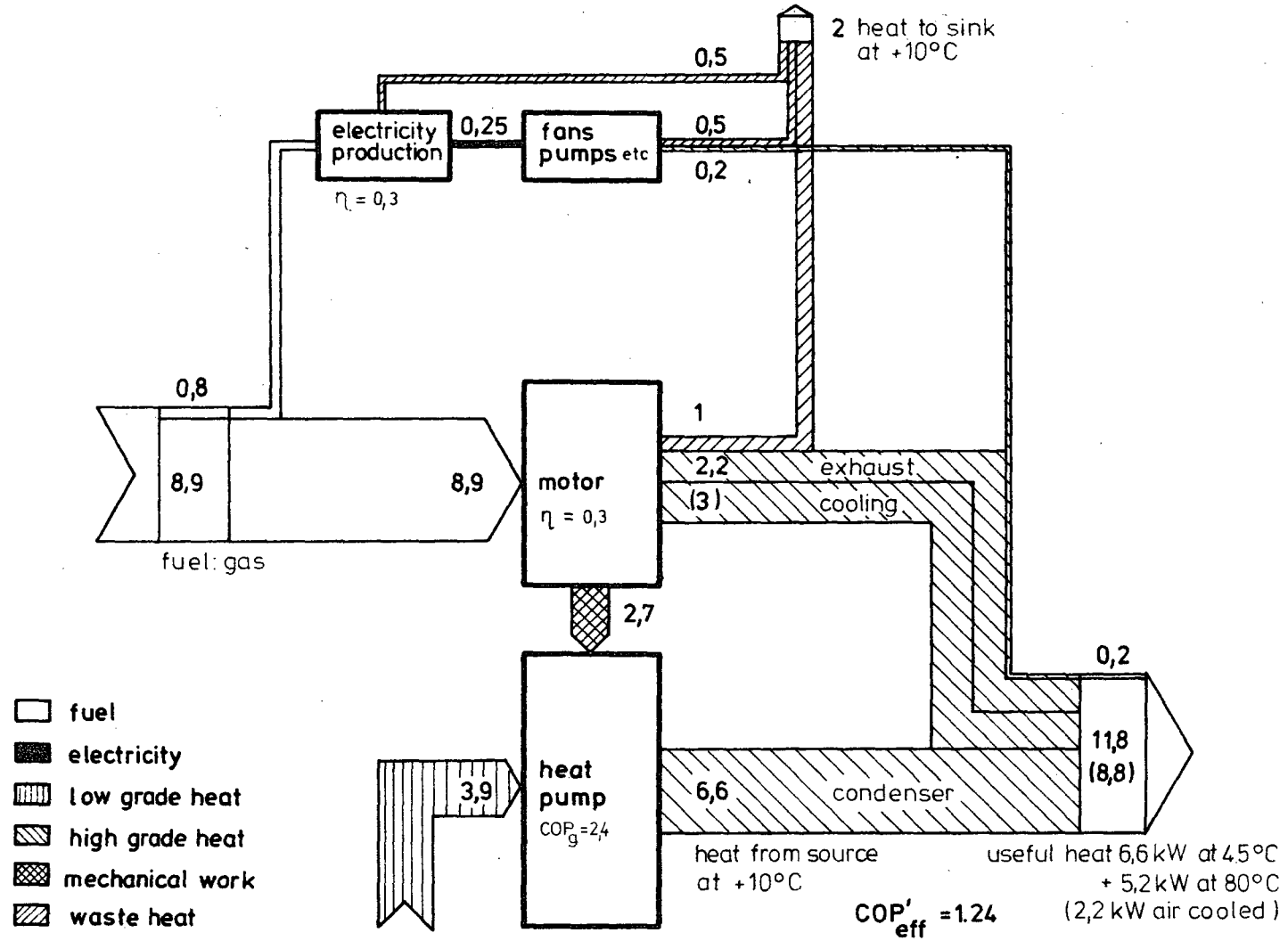
2 heat to sink
at +10°C
0,5
electricity
production
0,25
fans
pumps etc
0,5
0,2
η = 0,3
0,8
8,9
8,9
fuel: gas
motor
η = 0,3
1
2,2
(3)
exhaust
cooling
2,7
0,2
11,8
(8,8)
heat
pump
COP_g = 2,4
3,9
6,6
condenser
heat from source
at +10°C
useful heat 6,6 kW at 45°C
+ 5,2 kW at 80°C
(2,2 kW air cooled)
COP'_eff = 1.24
(0,93 with air cooled engine)
COP_eff = 1.31
(0,98 with air cooled engine)
fuel
electricity
low grade heat
high grade heat
mechanical work
waste heat

Profile No.7

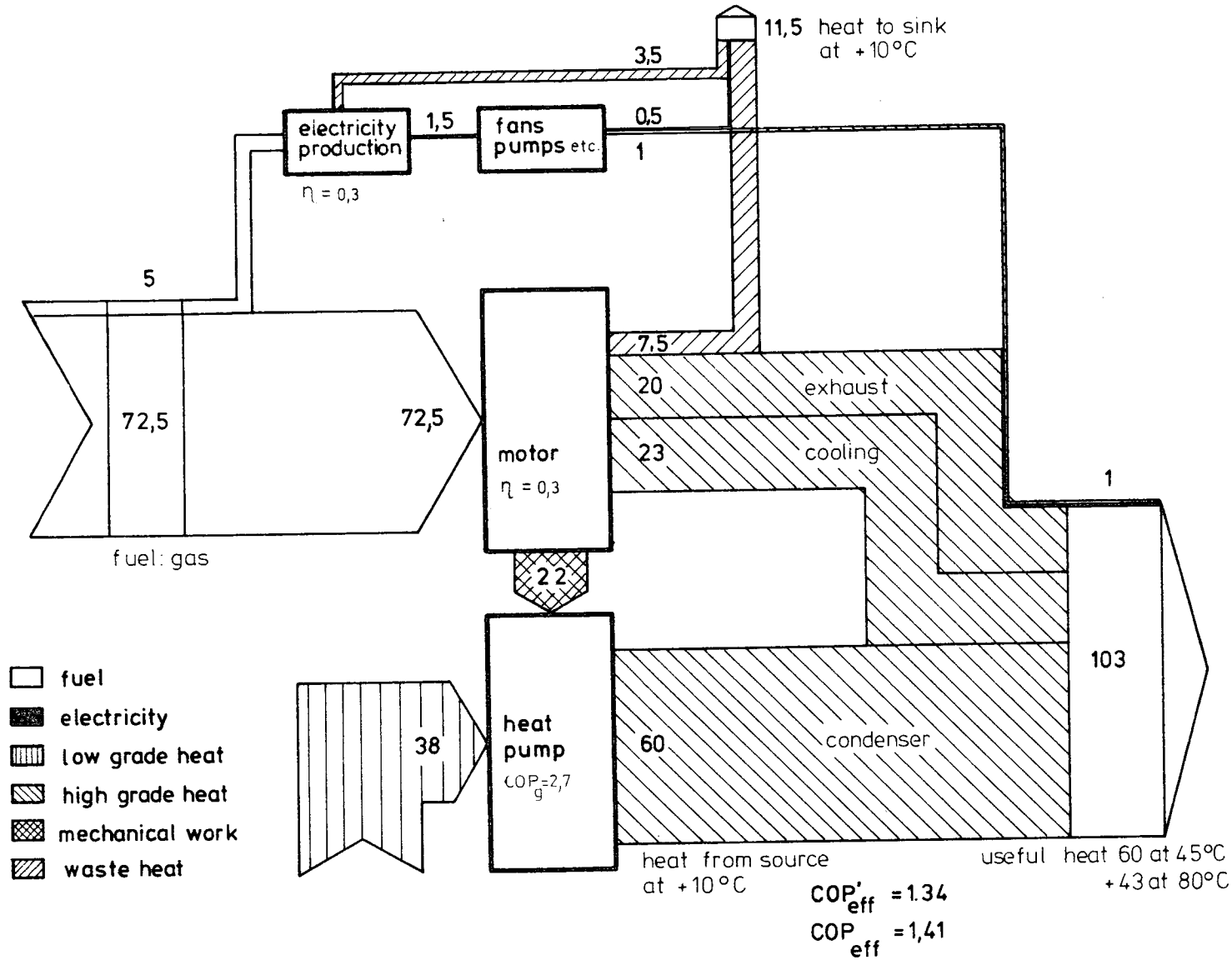
11,5 heat to sink at +10°C
3,5
electricity production
1,5
fans pumps etc.
0,5
1
η = 0,3
5
72,5
72,5
fuel: gas
motor
η = 0,3
7,5
20
exhaust
23
cooling
1
22
103
38
heat pump
COP_g=2,7
60
condenser
heat from source at +10°C
useful heat 60 at 45°C
+43 at 80°C
COP'_eff = 1.34
COP_eff = 1,41
fuel
electricity
low grade heat
high grade heat
mechanical work
waste heat

SYSTEM TYPE: Otto-Rankine Profile No 8

1. **Description**

Heat Pump cycle: Rankine, reciprocating compressor
working fluid: (a) R12, (b) and (c) R22
source: (a) ambient air, (b) surface water (c) ground water
sink: water (a) $T_d = 67^0C$, $T_r = 45^0C$; (c) $T_d = 39^0C$, T_r E 31^0C; (b) $T_d = 76^0C$, $T_r = 60^0C$.

Drive cycle: Otto engine
working fluid: air
fuel: natural gas
use: small scale district heating and commercial building heating

2. **Design data** (a) (b) (c) (a) (b) (c)

N_{hu}, heat output at 0 +3 +10 °C source temp.	98	861	245		kW
N_{hp}, heat input (including % heater efficiency)	92	561	126		kW
N_{aux}, electrical input (fans, pumps, controls)	not known				kW

3. **Back-up:**

	(a)	(b)	(c)
type:	boiler	boiler	boiler
fuel:	gas	oil	gas
% max. capacity:	?	10	50

4. **Controls:**

	(a)	(b)	(c)
capacity:	not known	not known	not known
defrost:	hot gas	not nec.	not nec.
back-up:	not known	not known	not known

5. **Performance**

air temp. °C	source temp. °C (a)	(b)	(c)	heating/cooling output, N_{hu}, (kW) (a)	(b)	(c)	heating/cooling COP_{el} (a)	(b)	(c)	heating/cooling COP'_{el} (a)	(b)	(c)
− 10	− 10											
0	0	+ 3	+ 10	98	861	245	1.1	1.5	2.0	not known		
+ 10	+ 10											
+ 25												
+ 35												

6. **Capital Costs*)**

output, N_{hu} (kW)	3/4	10/12	15/20	50	(a) 100	(c) 245	(b) 860
unit cost (DM)					74,000	202,500	470,000
installed cost (DM)					78,000	283,500	500,000

*) estimated costs at 1979 prices and exchange rates without taxes; not including heat distribution or back-up costs

7. **Maintenance costs**
(a) –
(b) n. % of installed capital cost per annum
(c) 5

8. **Service life in years**

source equipment: 25
heat pump: 15/20
drive: 15/20
weighted mean: 20

9. **Year of introduction:** 1981

Profile No 8

Schematic diagram not available

I. E. A. Study Advanced Heat Pump Systems.

Operating Characteristics of Advanced Heat Pump Systems

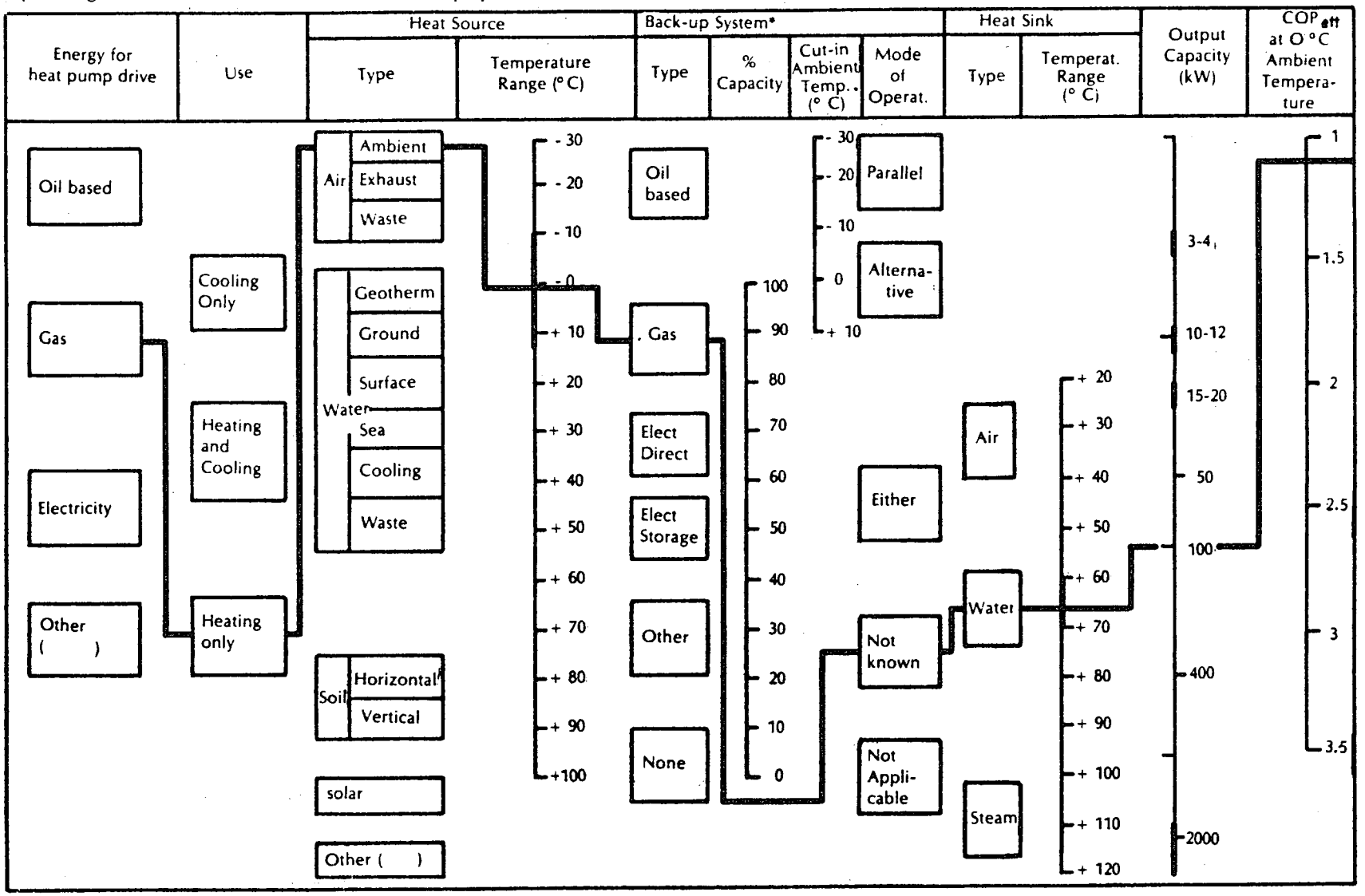

* Not emergency

Profile No 8 (a)

I. E. A. Study Advanced Heat Pump Systems.

Operating Characteristics of Advanced Heat Pump Systems

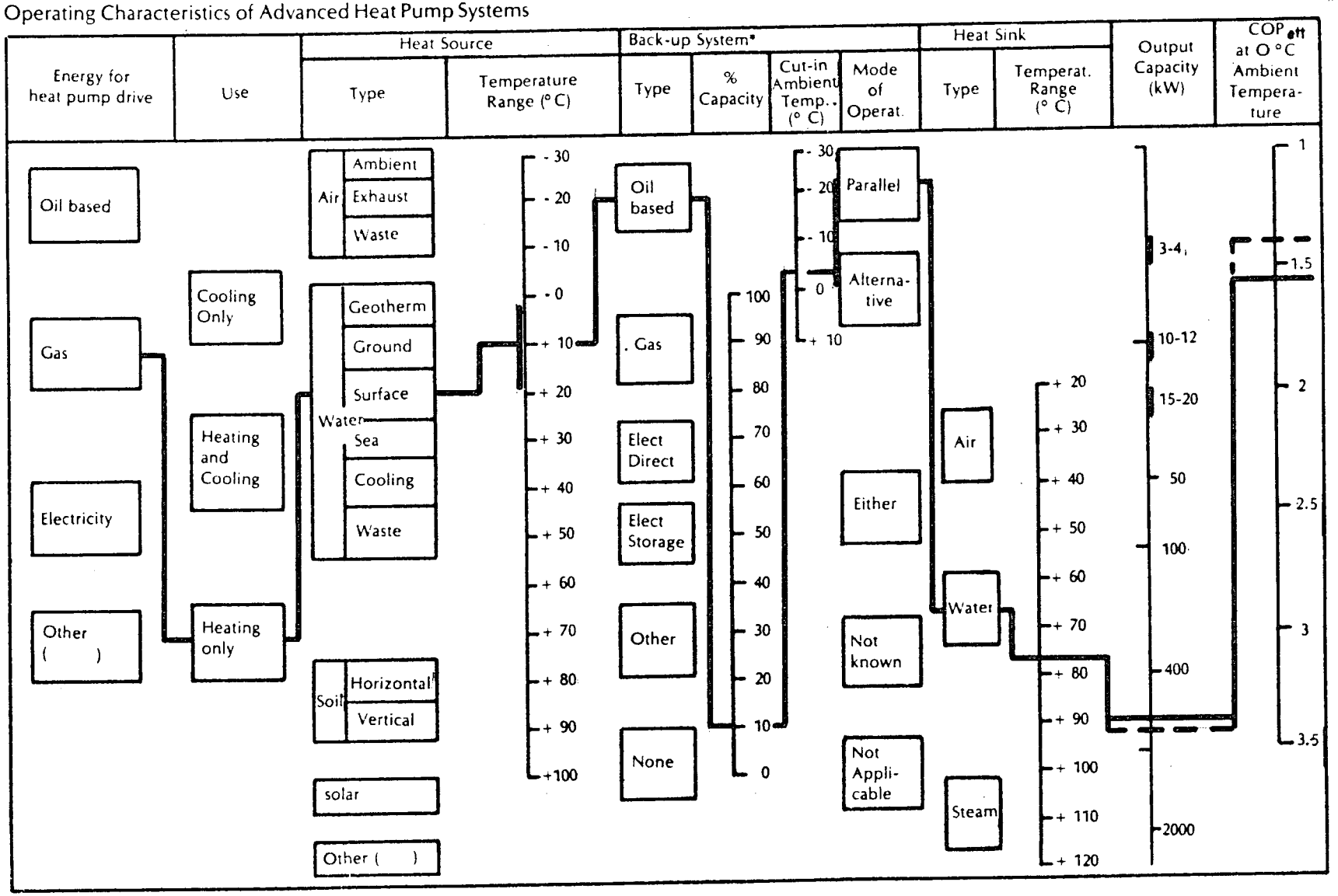

* Not emergency

A-47

Profile No 8 (b)

I. E. A. Study Advanced Heat Pump Systems.

Operating Characteristics of Advanced Heat Pump Systems

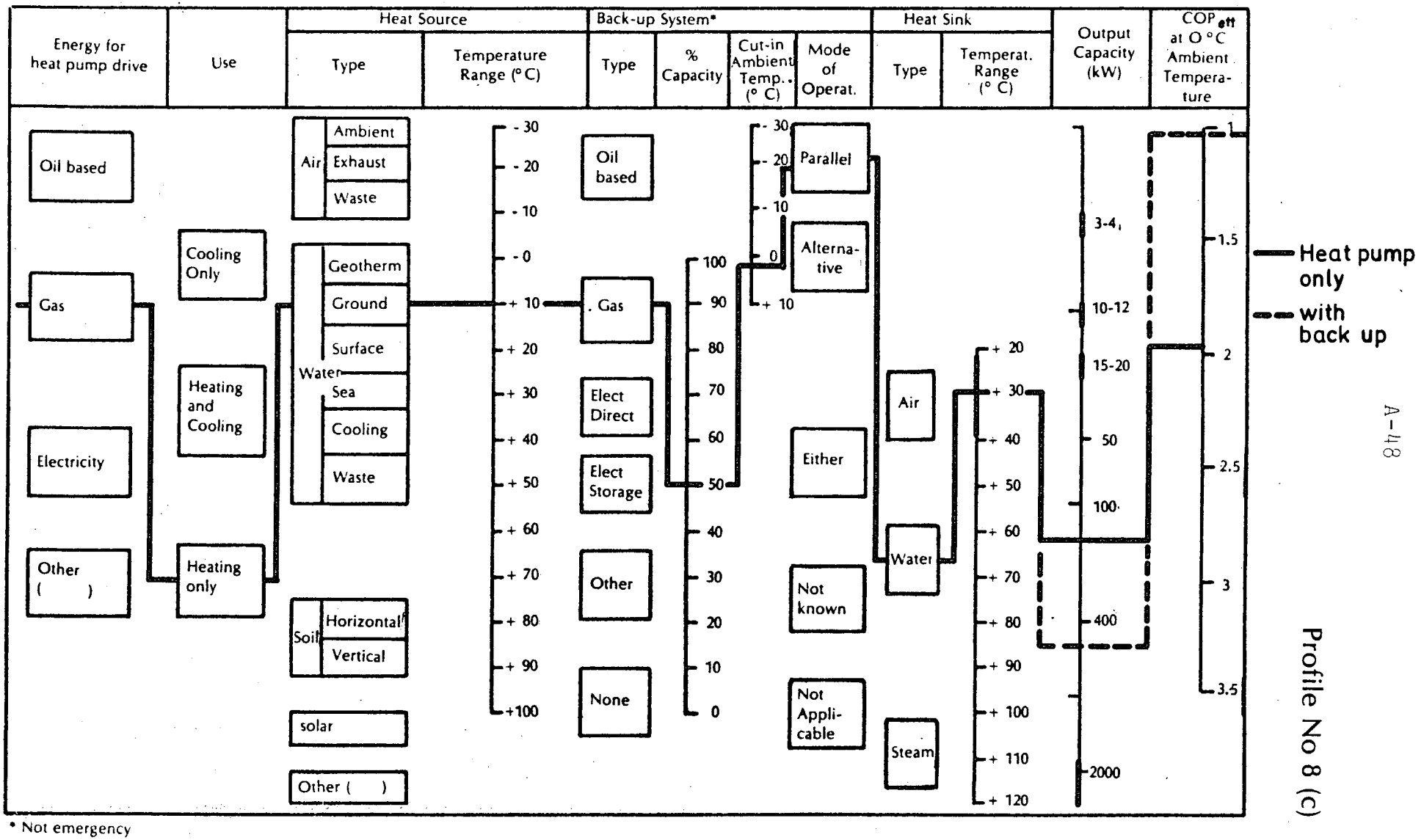

* Not emergency

Profile No 8 (c)

Profile No 8

Performance graphs not available

Profile No.8a

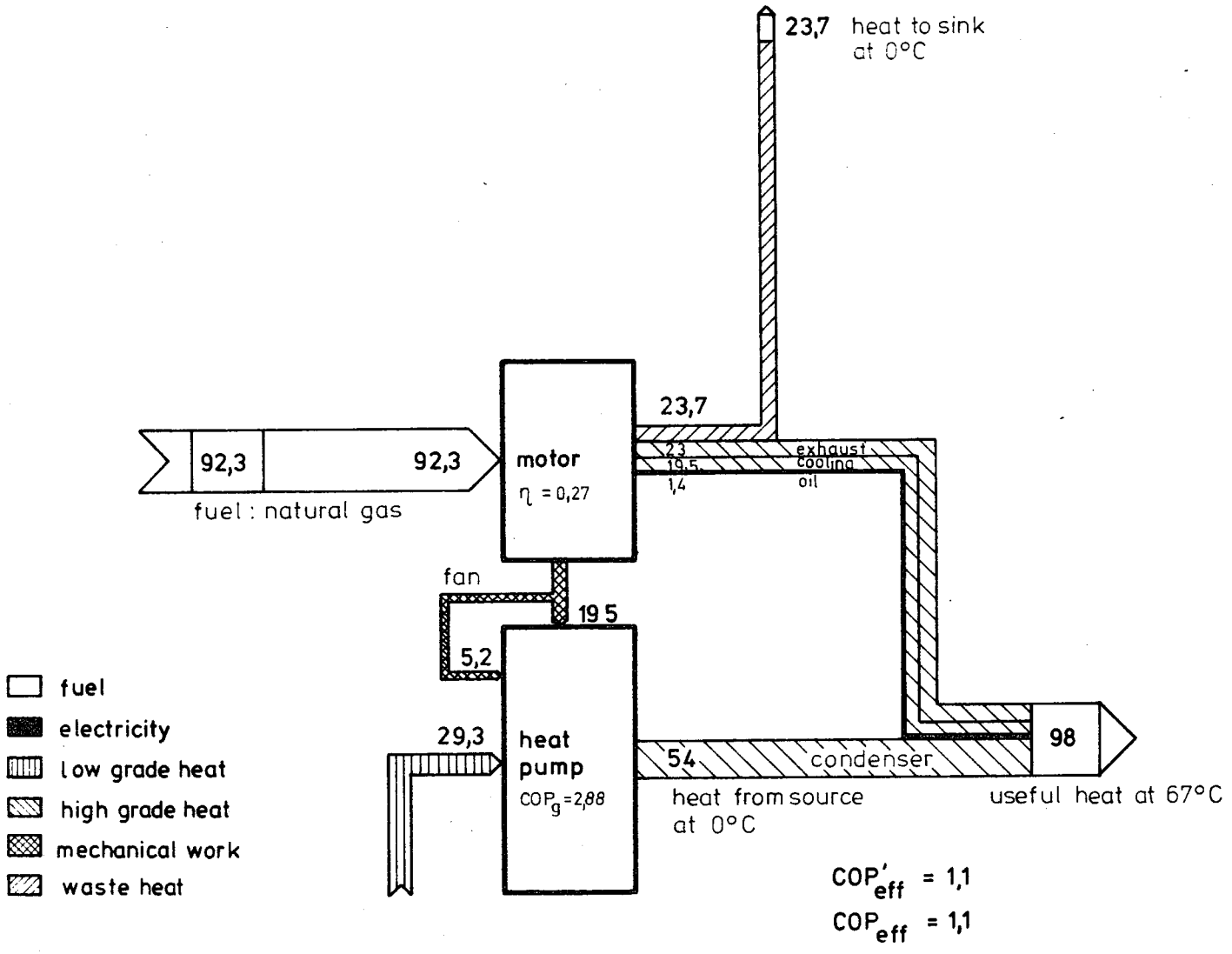

Profile No.8b

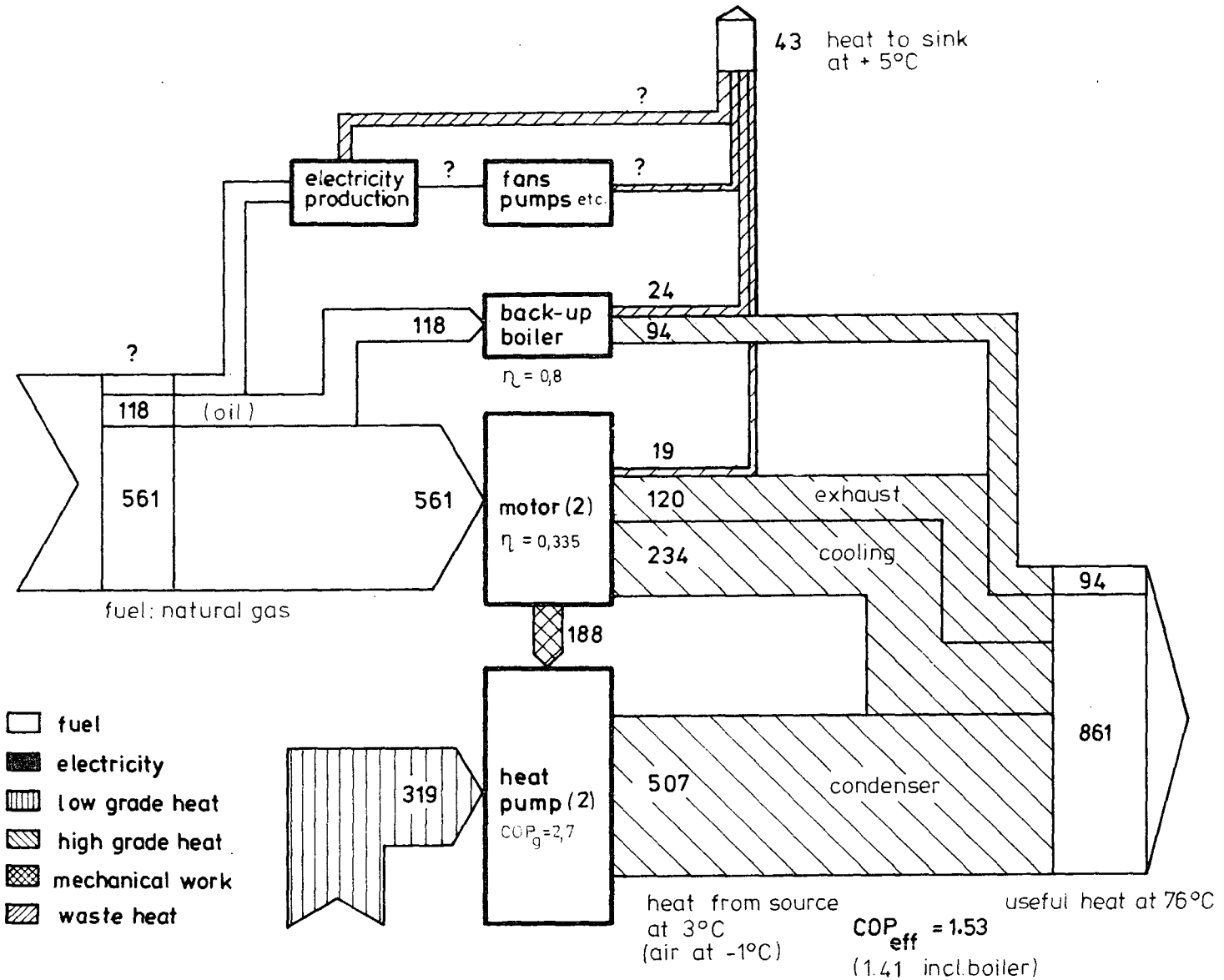

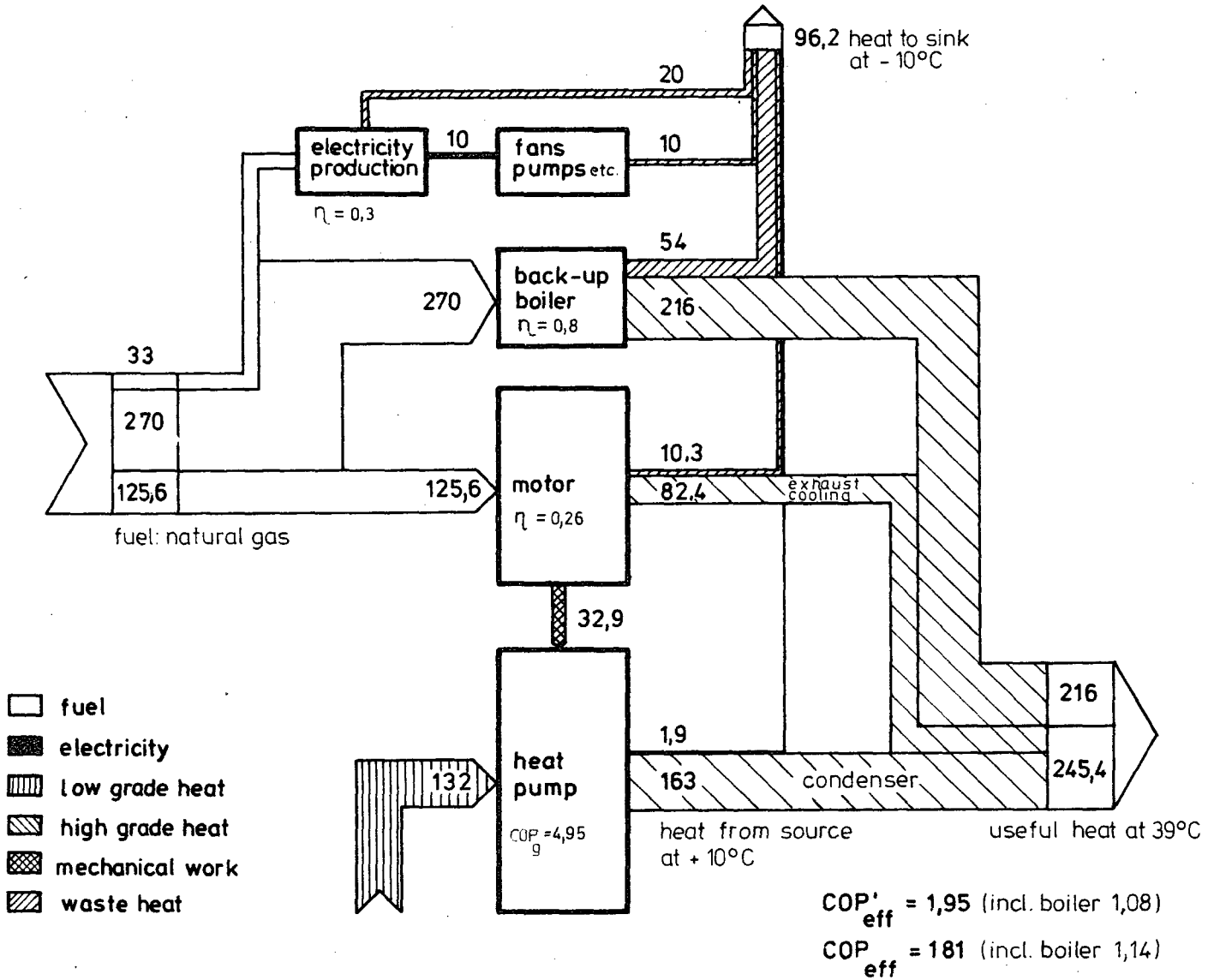

Profile No.8c

SYSTEM TYPE: Stirling-Rankine

Profile No 9

1. Description

Heat Pump cycle: reversed Rankine (inertia reciprocating compressor)
working fluid: R22
source: ambient air
sink: air: feed 34 to 37°C, return 21°C

Drive cycle: Stirling (free piston)
working fluid: Helium
fuel: natural gas
use: domestic central space heating and cooling

2. Design data

N_{hu}, heat output at +8 °C source temp.	12.6	kW
N_{hp}, heat input (including % heater efficiency)	7.2	kW
N_{aux}, electrical input (fans, pumps, controls)	1.1	kW

3. Back-up:

type: not known: probably unnecessary as unit sized for cooling load.
fuel:
% max. capacity:

4. Controls:

capacity: modulation of burner
defrost: not known
back-up: -

5. Performance

air temp. °C	source temp. °C	heating/cooling output, N_{hu}, (kW)	heating/cooling	
			CoP_{eff}	CoP'_{eff}
- 10	- 10	15	1.1	1.0
0	0	13.5	1.3	1.1
+ 10	+ 10	11.7	1.5	1.2
+ 25	+ 25	-	-	-
+ 35	+ 35	10.3	0.8	0.66

6. Capital Costs*)

output, N_{hu} (kW)	3/4	10/12	15/20	50	100	400	≥ 2000
unit cost (DM)			2750				
installed cost (DM)			5000				

*) estimated costs at 1979 prices and exchange rates without taxes; not including heat distribution or back-up costs

7. Maintenance costs

5... % of installed capital cost per annum

8. Service life in years

source equipment:
heat pump: } 15
drive:
weighted mean: 15

9. Year of introduction: 1983

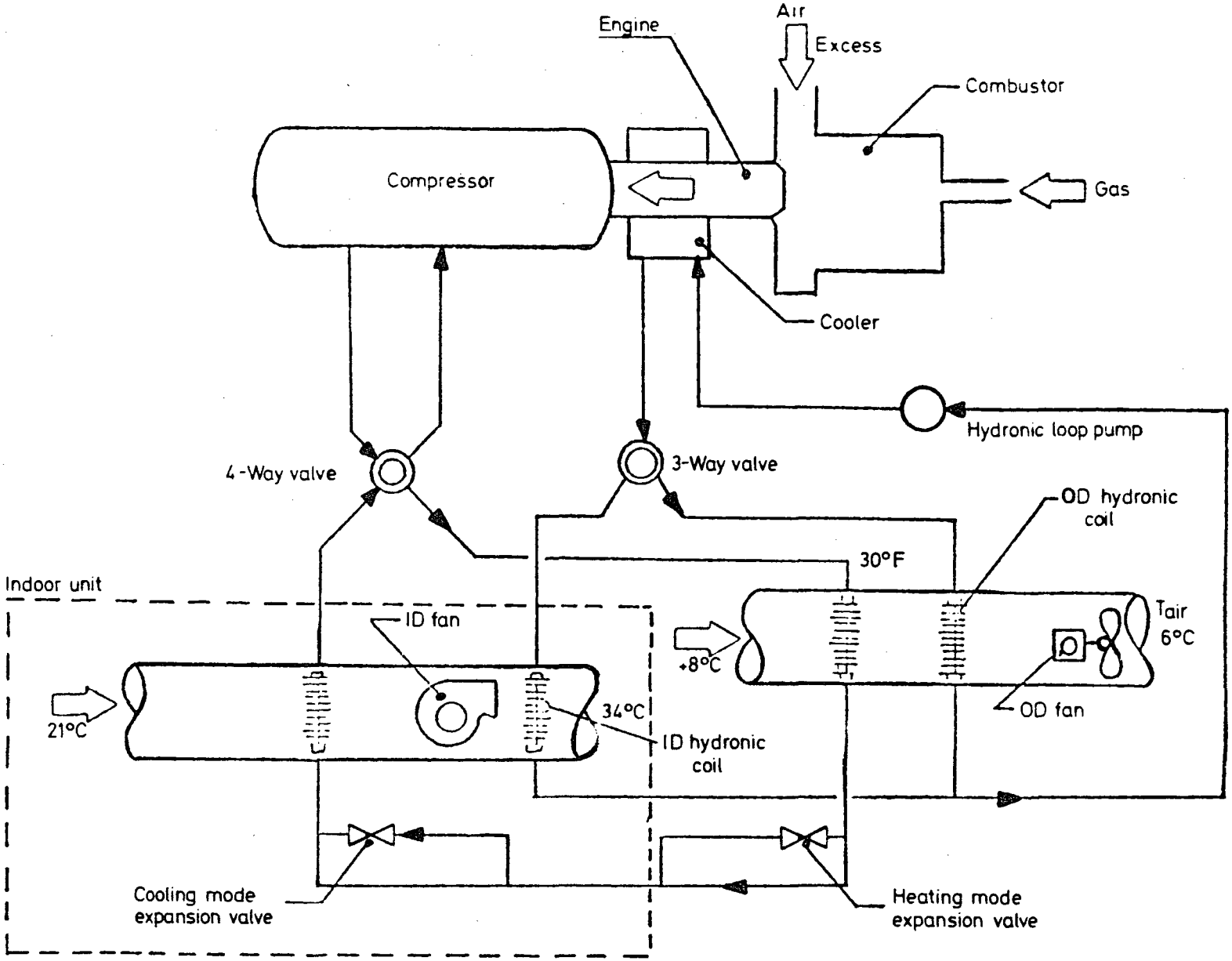

Source (+8.3°C): Heating Operation

Schematic diagram

Profile No 9

A-5/1

I. E. A. Study Advanced Heat Pump Systems.

Operating Characteristics of Advanced Heat Pump Systems

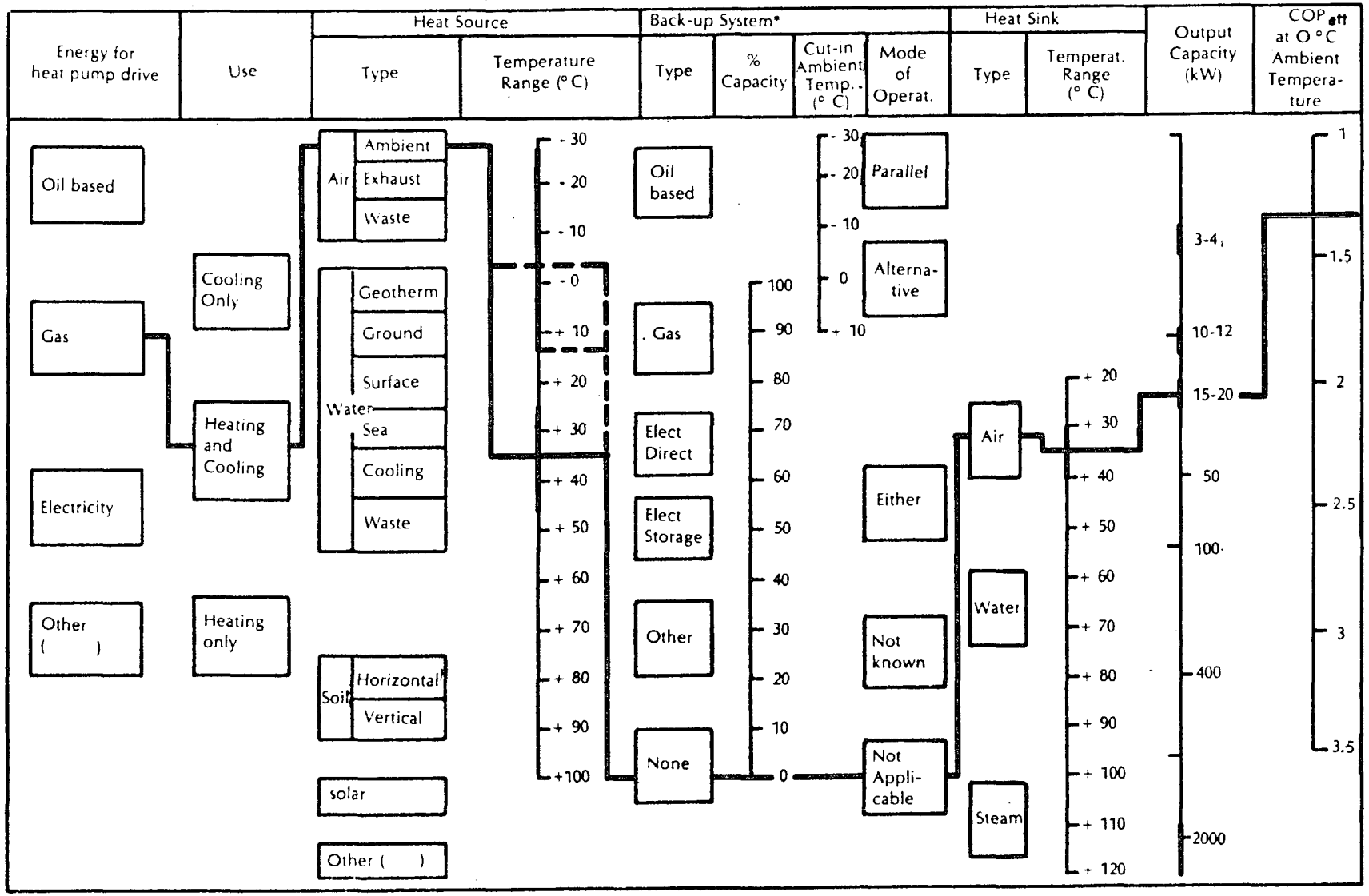

* Not emergency

Profile No 9

Profile No 9

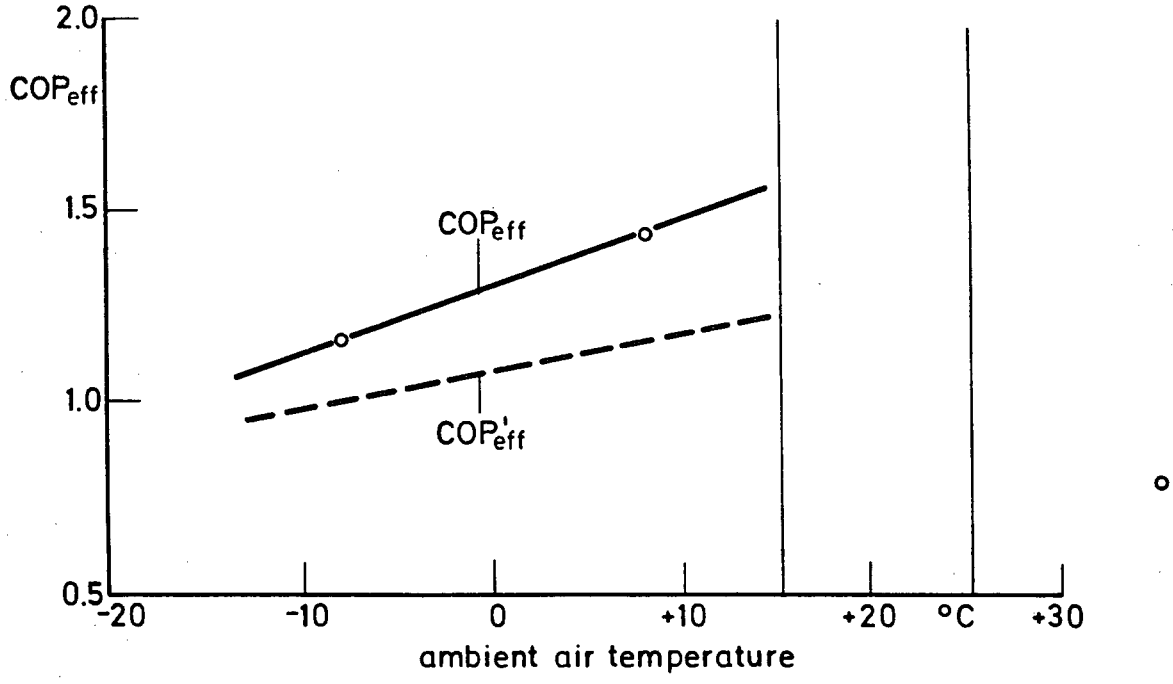
2.0
COPeff
1.5
1.0
0.5
COPeff
COP'eff
-20
-10
0
+10
+20
°C
+30
ambient air temperature

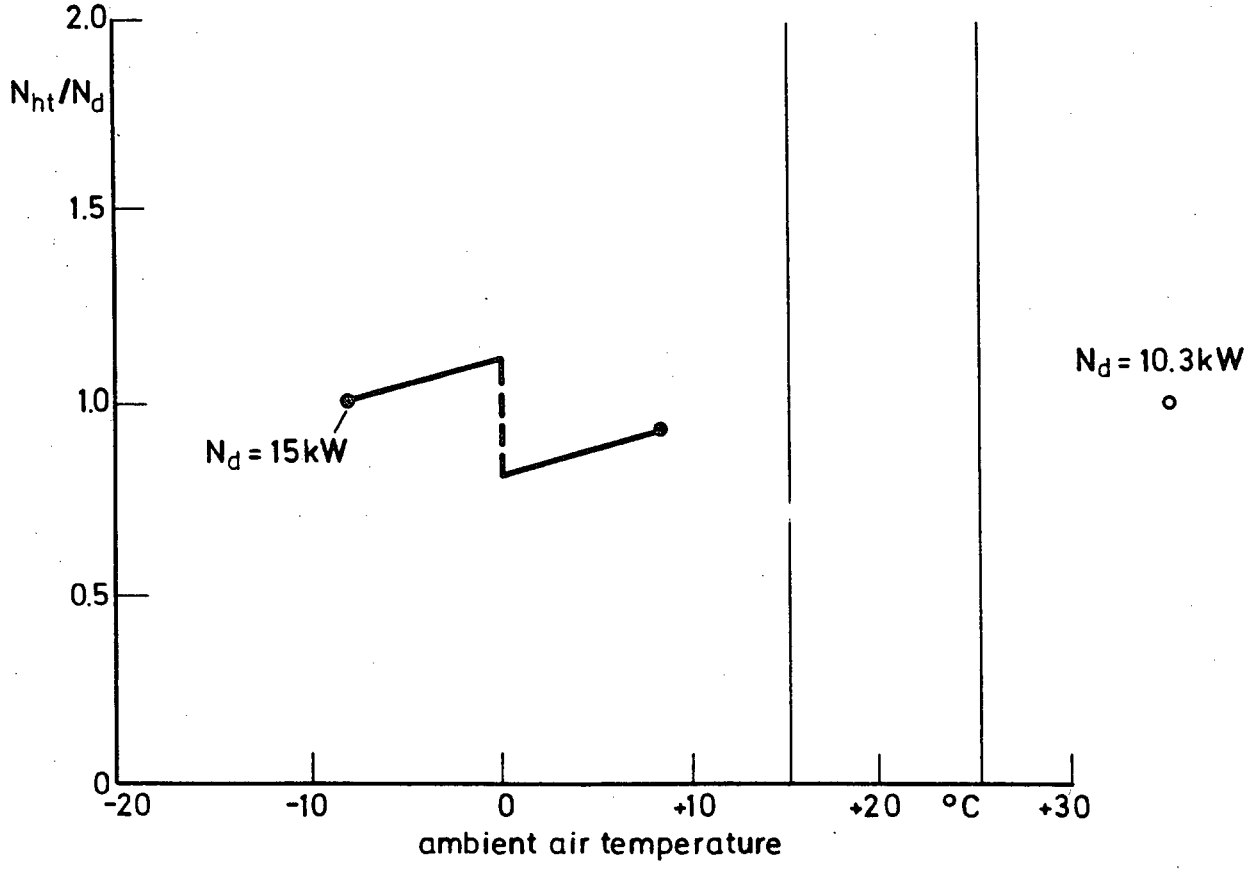
2.0
Nht/Nd
1.5
1.0
0.5
0
Nd = 15kW
Nd = 10.3kW
-20
-10
0
+10
+20
°C
+30
ambient air temperature

Profile No.9

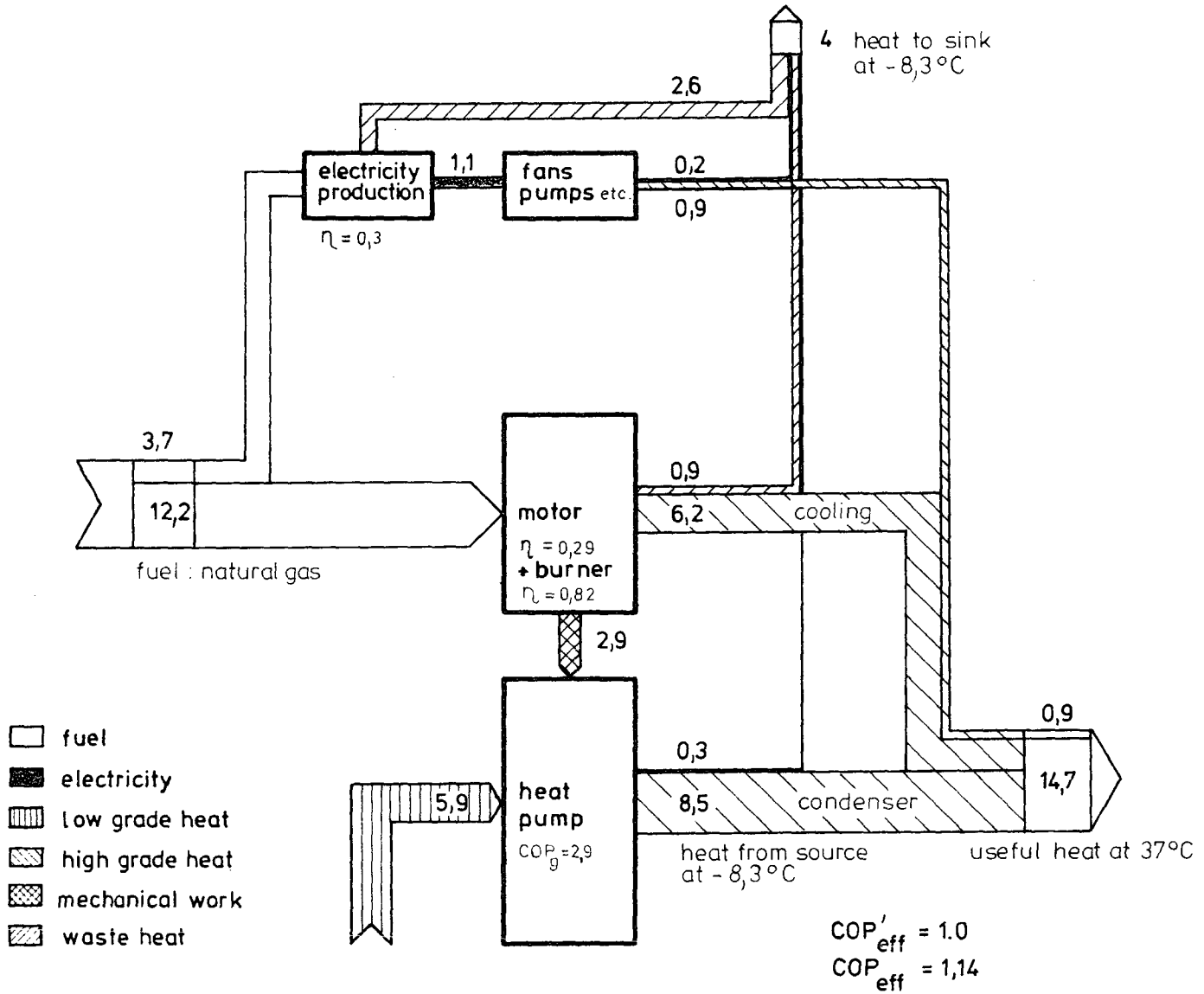
4 heat to sink at -8,3°C
2,6
electricity production
1,1
fans pumps etc.
0,2
0,9
η = 0,3
3,7
12,2
fuel : natural gas
motor
η = 0,29
+ burner
η = 0,82
0,9
6,2
cooling
2,9
heat pump
COP_g = 2,9
5,9
0,3
8,5
condenser
heat from source at -8,3°C
0,9
14,7
useful heat at 37°C
COP'_eff = 1.0
COP_eff = 1,14
fuel
electricity
low grade heat
high grade heat
mechanical work
waste heat

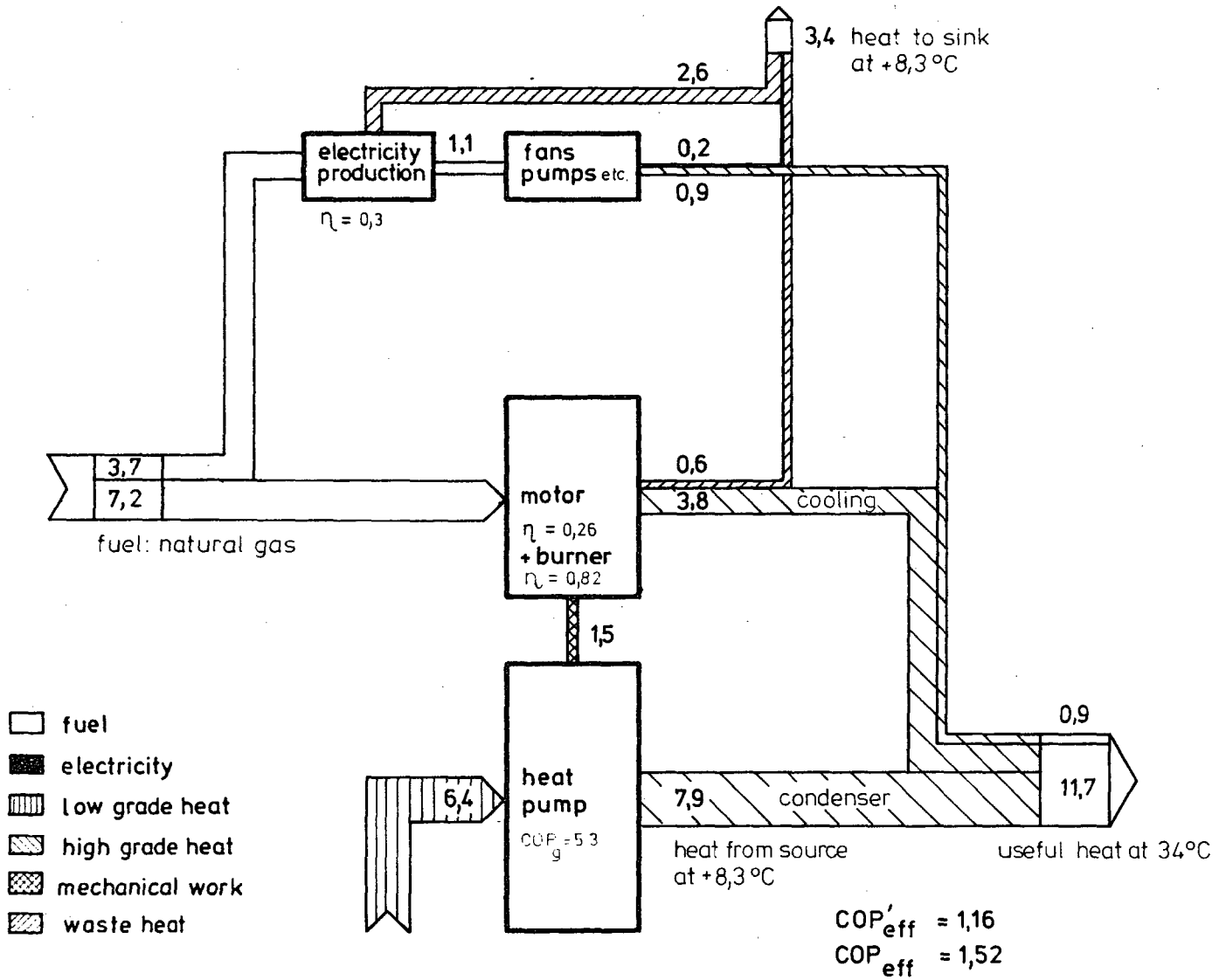

Profile No.9

A-58

SYSTEM TYPE: *chemical heat pump: solid sorption* Profile No 10

1. Description

Heat Pump	cycle:	solid sorption
	working fluid:	metal salt + H_2O
	source:	ground; 0^oC
	sink:	water, T_d = 40 to 60^oC, T_r = 35 to 50^oC
Drive	cycle:	solar radiation; 60-70^oC
	working fluid:	water
	fuel:	solar, electricity for auxiliaries
	use:	domestic central space and water heating

2. Design data

N_{hu}, heat output at 0 °C source temp.		25	kW	max.
N_{hp}, heat input (including % heater efficiency)		variable	kW	
N_{aux}, electrical input (fans, pumps, controls)	charging	0.3	kW	
	discharging	0.15		

3. Back-up:

type:	not necessary
fuel:	-
% max. capacity:	-

4. Controls:

capacity:	control of pumping rate from ground store/solar collectors
defrost:	not necessary
back-up:	not necessary

5. Performance

air temp. °C	source temp. °C	heating/cooling output, N_{hu}, (kW)	heating/cooling	
			CoP_{eff}	CoP'_{eff}
- 10 0 + 10	0^oC		not applicable see p. A-63	
+ 25 + 35	not applicable			

6. Capital Costs*)

25 kW

output, N_{hu} (kW)	3/4	10/12	15/20	50	100	400	≥ 2000
unit cost (DM)			21,250**				
installed cost (DM)							

*) estimated costs at 1979 prices and exchange rates without taxes; not including heat distribution or back-up costs

**) this cost does not include solar collectors or ground coil units. Cost estimated at DM 2125/MWh stored for all unit sizes.

7. Maintenance costs

1.. % of installed capital cost per annum

8. Service life in years

source equipment:	30
heat pump:	30
drive:	10/15
weighted mean:	≤ 30

9. Year of introduction: 1982

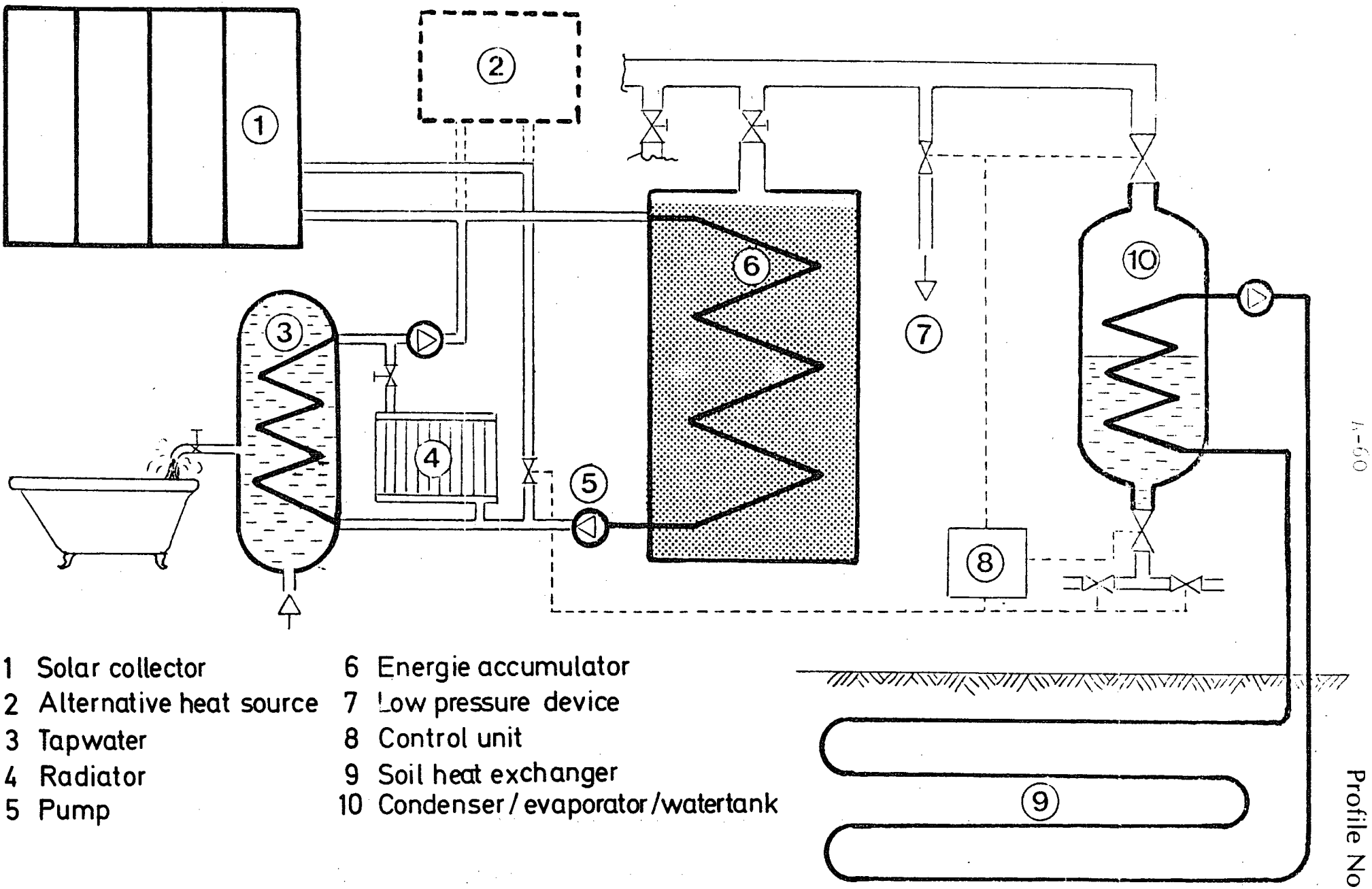

1 Solar collector
2 Alternative heat source
3 Tapwater
4 Radiator
5 Pump
6 Energie accumulator
7 Low pressure device
8 Control unit
9 Soil heat exchanger
10 Condenser / evaporator / watertank

Energie storing system tepidus

I. E. A. Study Advanced Heat Pump Systems.

Operating Characteristics of Advanced Heat Pump Systems

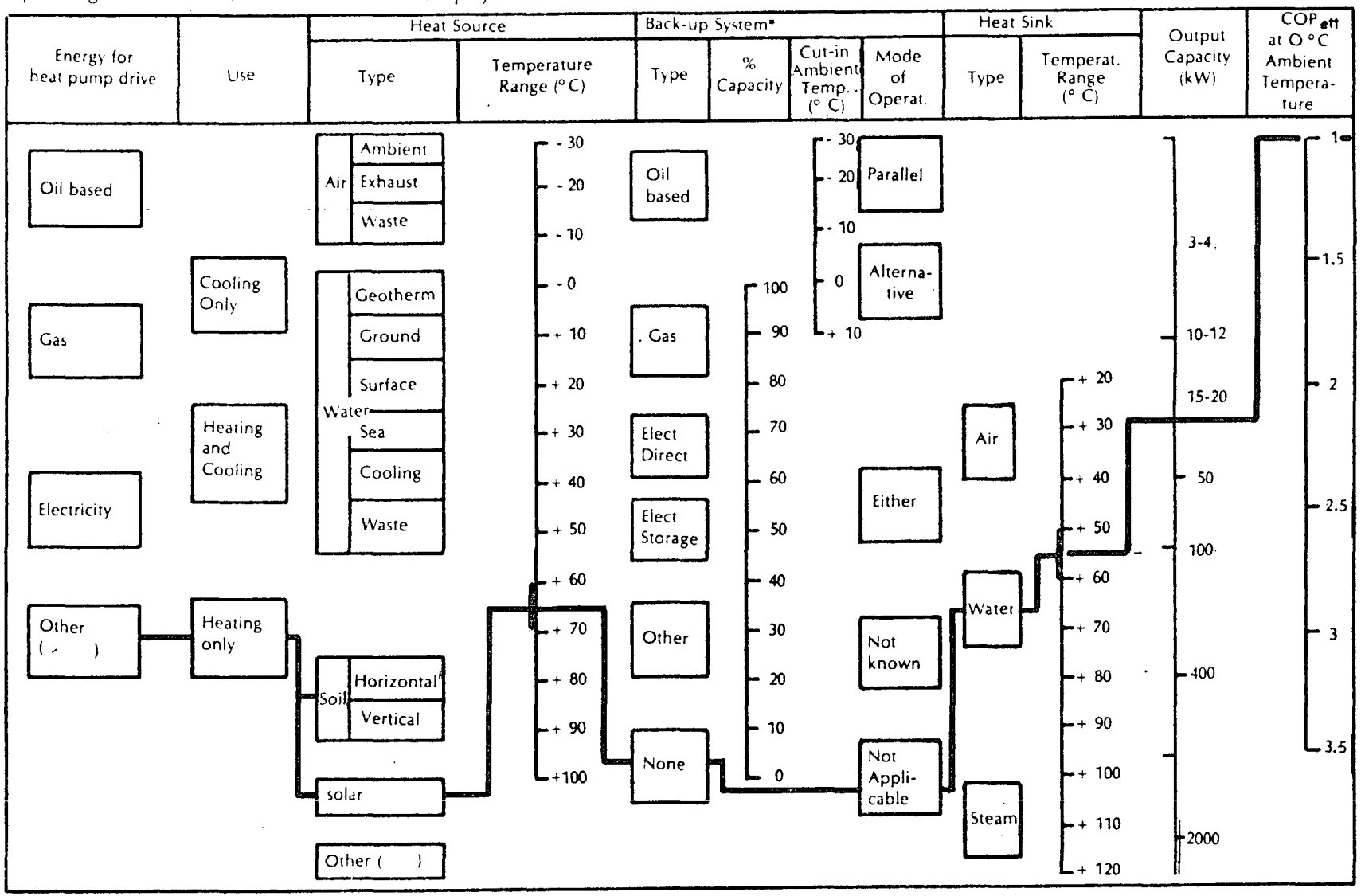

* Not emergency

Profile No 10

Profile No 10

Performance graphs not available

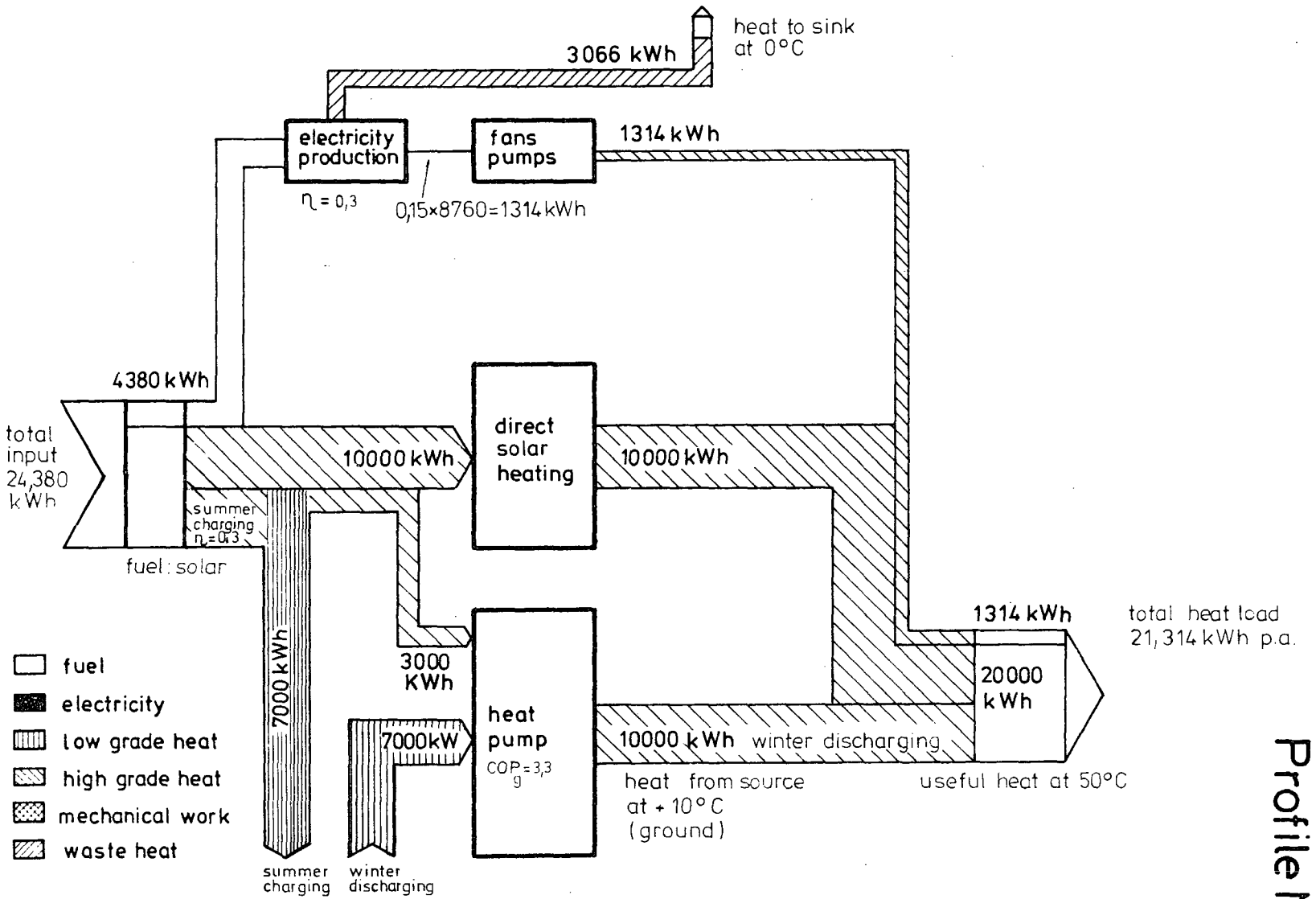

Profile No.10

SYSTEM TYPE: electric-Rankine: ground source — Profile No 13

1. Description

Heat Pump cycle: reversed Rankine
working fluid: R22
source: ground: a) vertical coil, b) horizontal coil (brine filled)
sink: water: feed 55°C, return 45°C

Drive cycle: electric motor
working fluid: -
fuel: -
use: domestic central space and water heating

2. Design data

	a)	b)	
N_{ht}, heat output at 0 °C source temp.	14.5	11	kW
N_{hp}, heat input (including - % heater efficiency)	0	0	kW
N_{aux}, electrical input (fans, pumps, controls)	5.0	4.5	kW

3. Back-up: type: direct electric, parallel operation
fuel: electric
% max. capacity: ~25

4. Controls: capacity: on/off
defrost: not necessary
back-up: not known

5. Performance

air temp. °C	source temp. °C a)	b)	heating/cooling output, N_{ht}, (kW) a)	b)	heating/cooling CoP_{eff} a)	b)	heating/cooling CoP'_{eff} a)	b)
- 10	0-20°C (brine)	-5-0°C	14	10				
0			14.5	11	3.0	2.5	0.81	0.67
+ 10			15.5	13				
+ 25	not available							
+ 35								

6. Capital Costs*)

output, N_{ht} (kW)	3/4	a) 10/12	b)	a) 15/20	b)	50	100	400	≥ 2000
unit cost (DM)		-	7900	8100	-				
installed cost (DM)		-	11,000/ ~~13,000~~	15,000/ ~~17,000~~	-				

*) estimated costs at 1979 prices and exchange rates without taxes; not including heat distribution or back-up costs

7. Maintenance costs

1.5% of installed capital cost per annum

8. Service life in years

source equipment: 20
heat pump: 10/15
drive: 10/15
weighted mean: 15

9. Year of introduction: a) 1982/85
b) 1980

Profile No 13 a

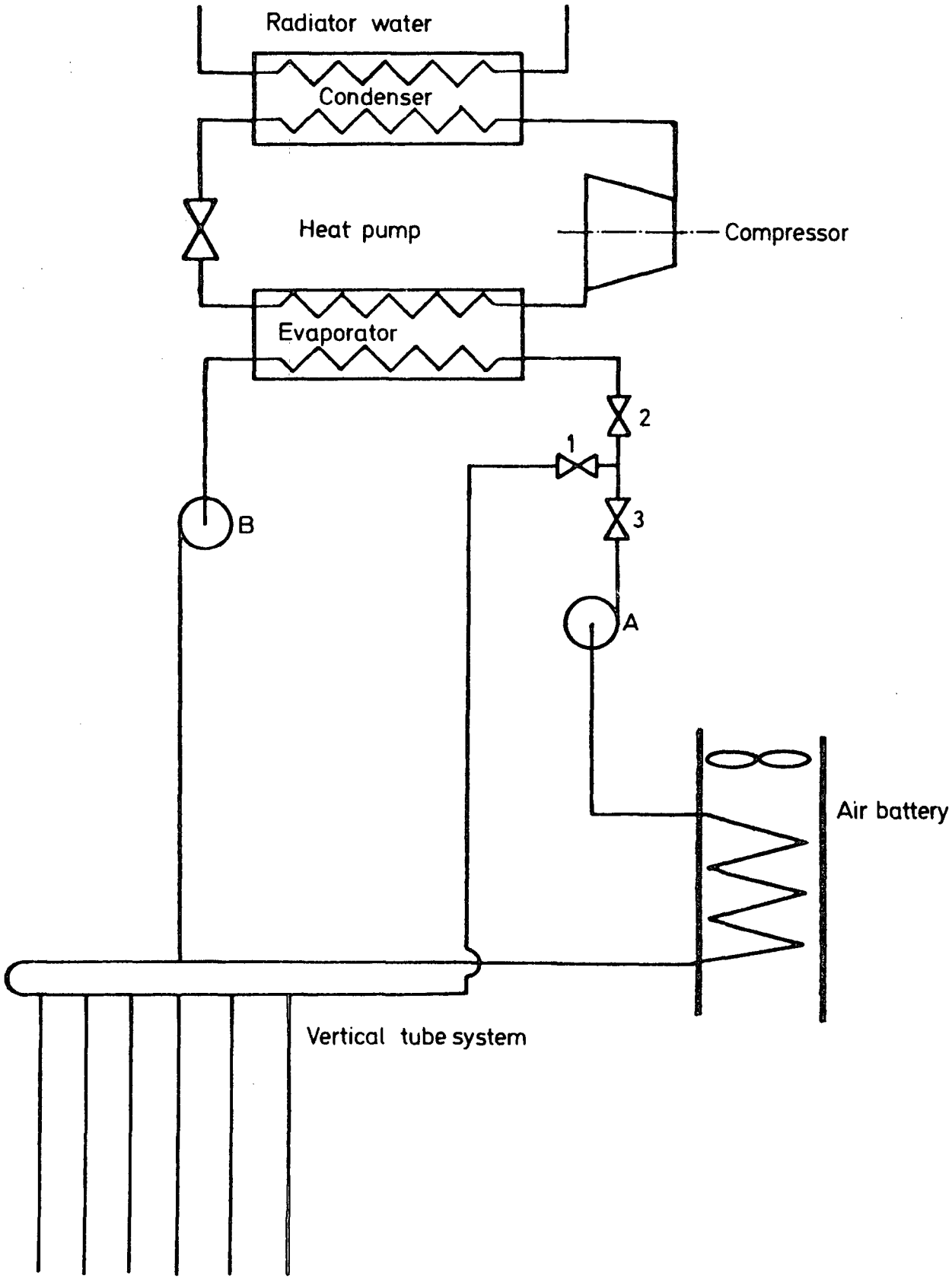

Simplified Flow Sheet

I. E. A. Study Advanced Heat Pump Systems.

Operating Characteristics of Advanced Heat Pump Systems

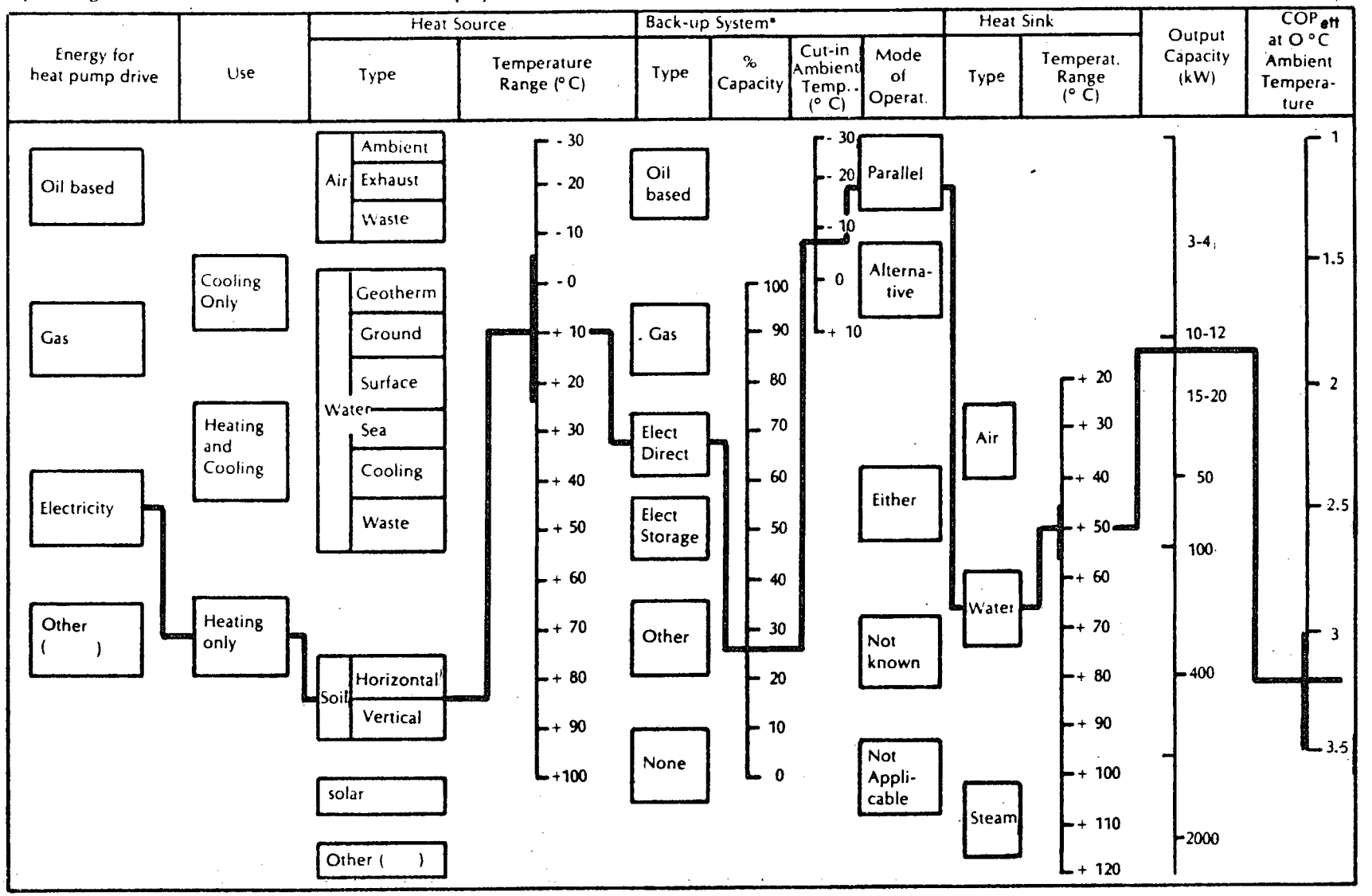

* Not emergency

Profile No 13

Profile No 13

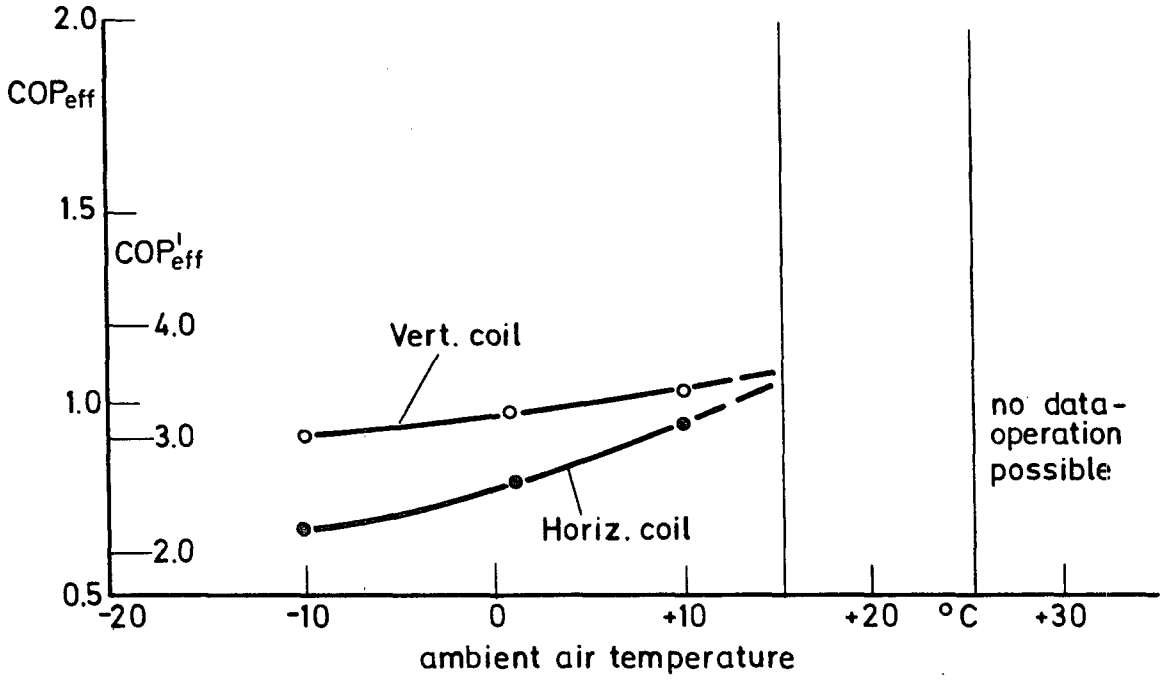

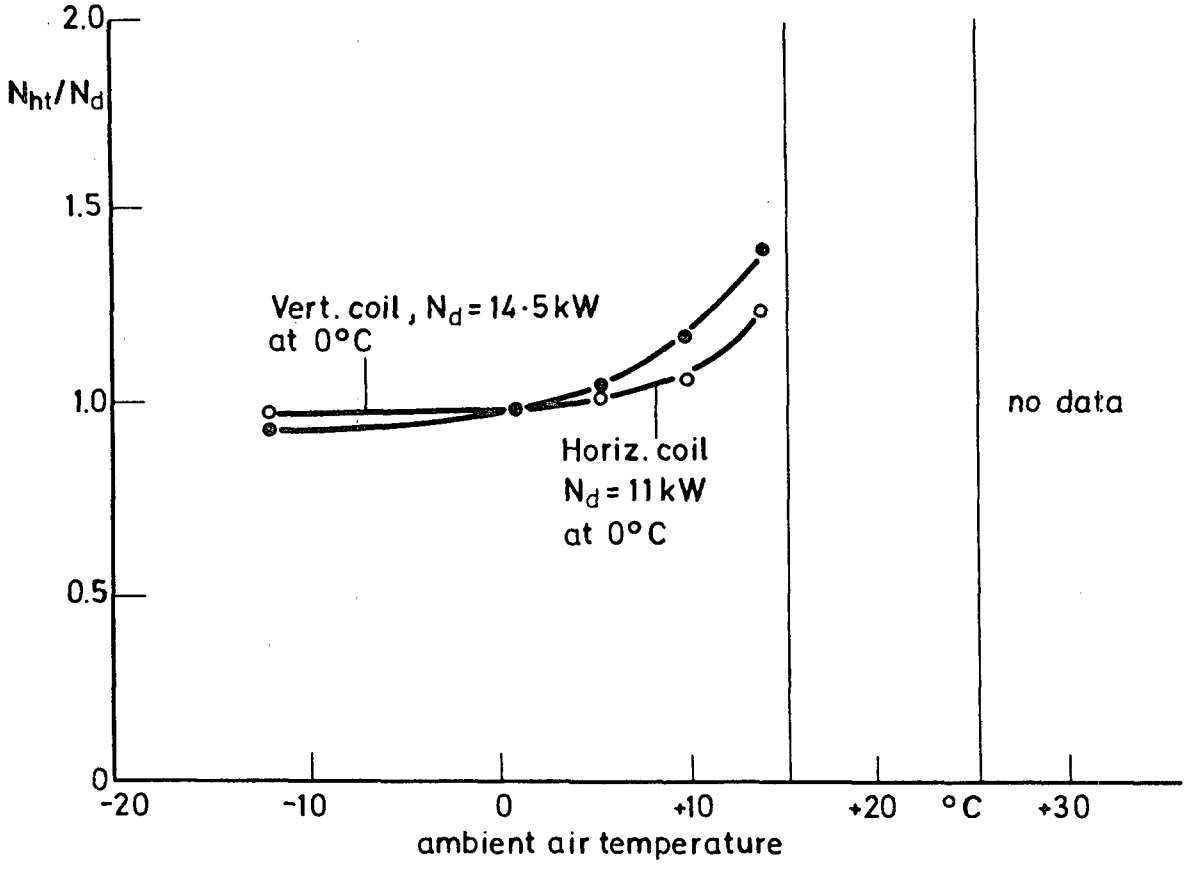

Profile No.13

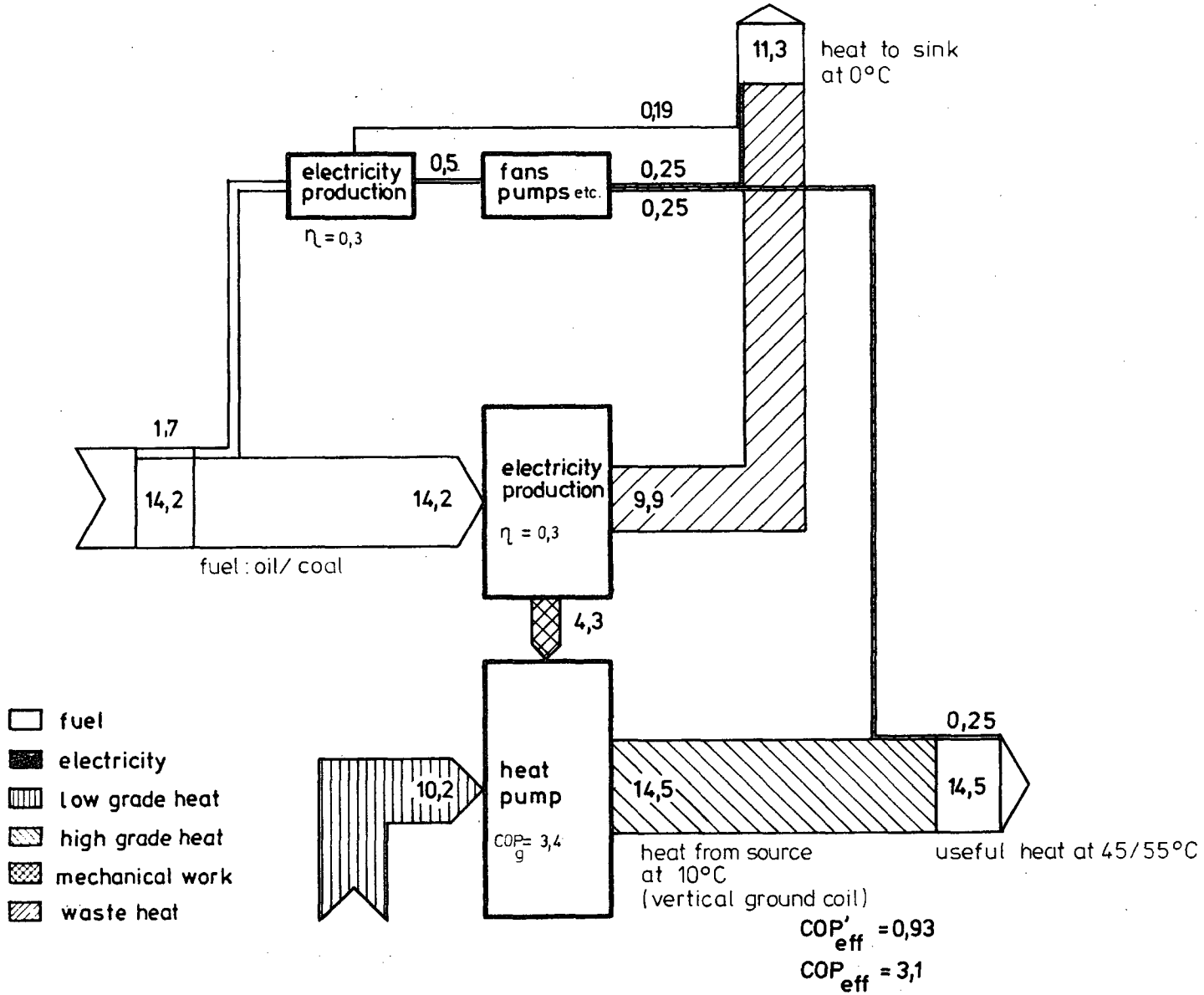

SYSTEM TYPE: absorption

Profile No 14

1. Description

Heat Pump	cycle:	absorption, single stage
	working fluid:	NH_3/H_2O
	source:	ambient air
	sink:	water, T_d = 60°C to 70°C, T_r = 40°C to 50°C
Drive	cycle:	not applicable
	working fluid:	not applicable
	fuel:	natural gas
	use:	domestic central space and hot water heating

2. Design data

N_{hu}, heat output at +10°C source temp.	10	kW
N_{hp}, heat input (including 80 % heater efficiency)	9.6	kW
N_{aux}, electrical input (fans, pumps, controls)	0.4	kW

3. Back-up:

type:	not known
fuel:	-
% max. capacity:	-

4. Controls:

capacity:	not known
defrost:	not known
back-up:	not known

5. Performance

air temp. °C	source temp. °C	heating/cooling output, N_{hu}, (kW)	heating/cooling	
			CoP_{eff}	CoP'_{eff}
- 10	- 10	not known	0.7	0.8
0	0		0.9	0.9
+ 10	+ 10	10	1.03	1.0
+ 25	+ 25			0.6*
+ 35	+ 35			0.5*

* not included in design: estimates only

6. Capital Costs*)

output, N_{hu} (kW)	3/4	10/12	15/20	50	100	400	≥ 2000
unit cost (DM)		4000	~7000				
installed cost (DM)							

*) estimated costs at 1979 prices and exchange rates without taxes; not including heat distribution or back-up costs

7. Maintenance costs

2. % of installed capital cost per annum

8. Service life in years

source equipment:	20
heat pump:	20
drive:	-
weighted mean:	20

9. Year of introduction: 1985

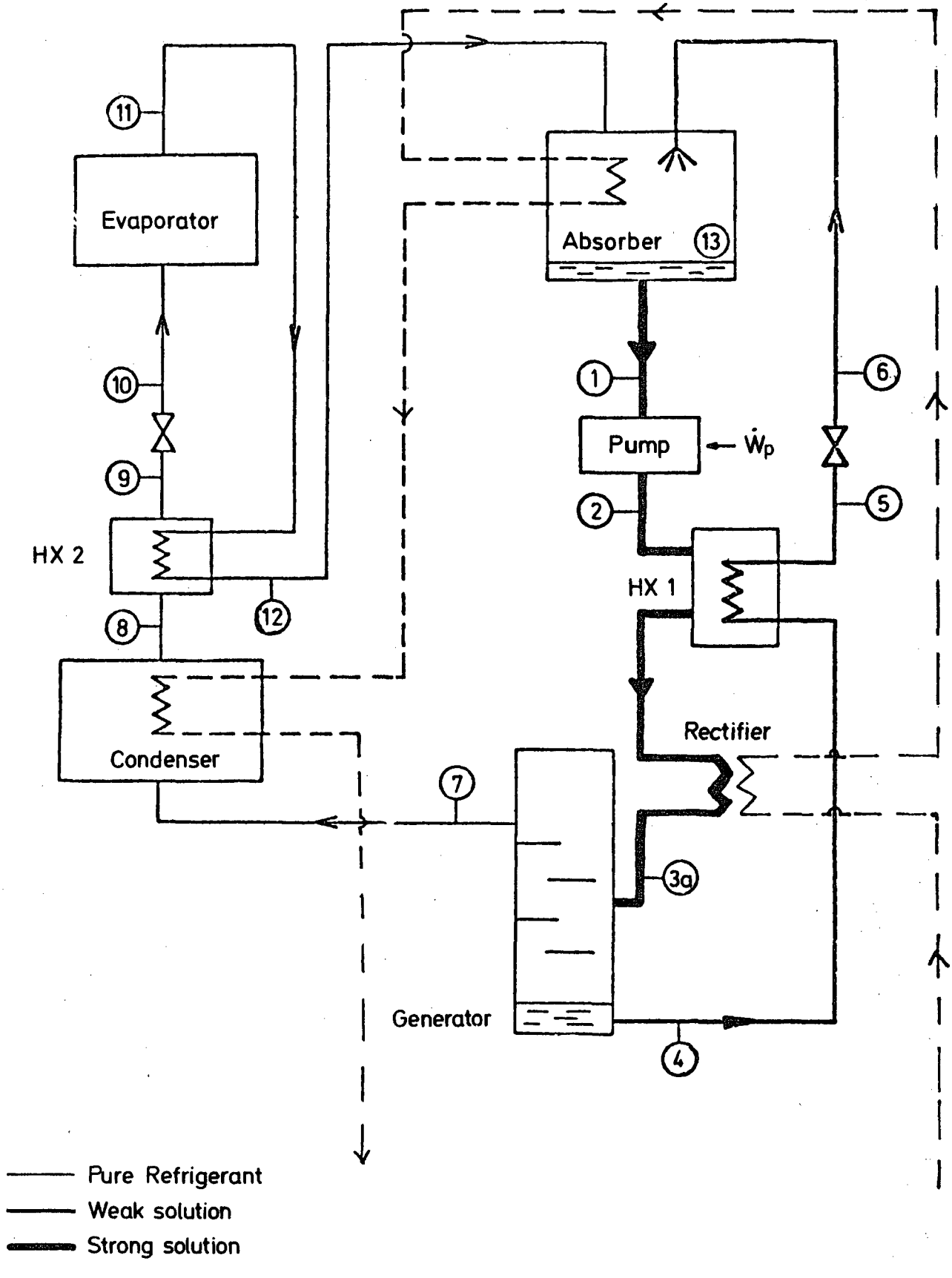

Refined Absorption Cycle Circuit

I. E. A. Study Advanced Heat Pump Systems.

Operating Characteristics of Advanced Heat Pump Systems

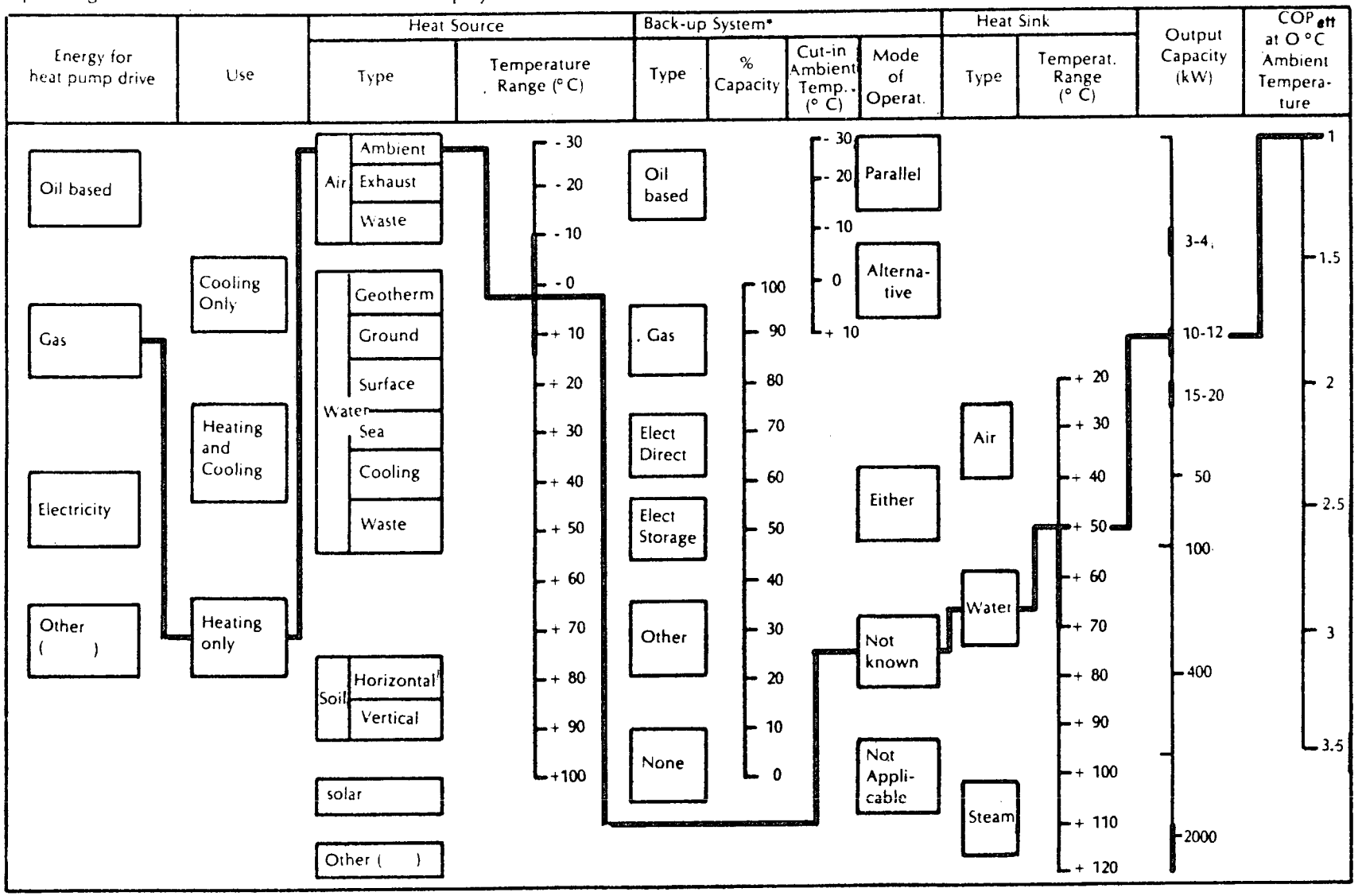

* Not emergency

Profile No 14

Profile No 14

Performance graphs not available

Profile No. 14

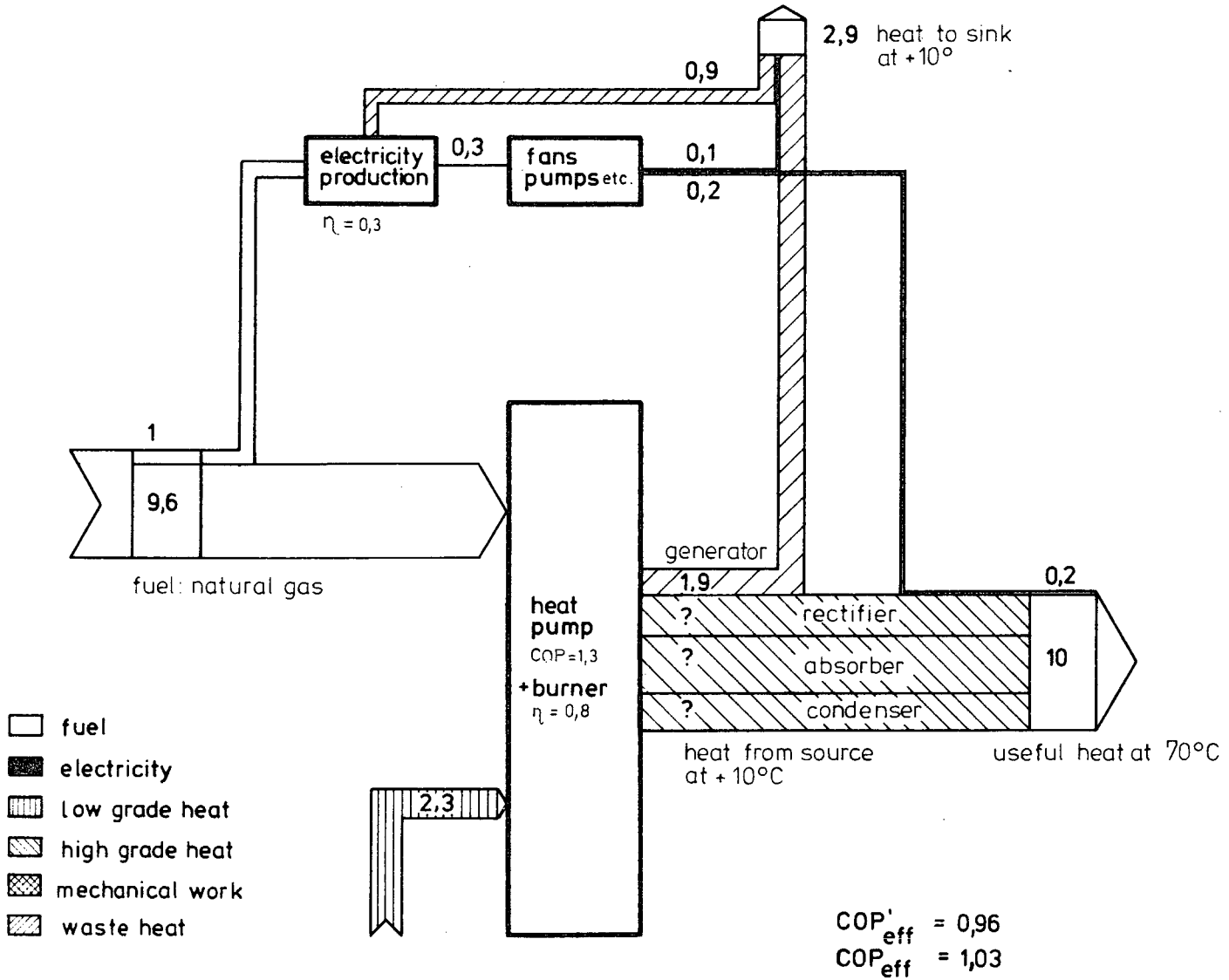

SYSTEM TYPE: Rankine-Rankine

Profile No 15

1. Description

Heat Pump cycle: reversed Rankine, centrifugal compressor
working fluid: unknown (possibly R11, R113 or R114)
source: ambient air
sink: a) water: feed 55°C, return 45°C
b) air

Drive cycle: Rankine, centrifugal turbine
working fluid: as heat pump
fuel: natural gas
use: a) domestic central space and water heating
b) domestic central space heating and cooling

2. Design data

	a)	b)	
N_{hr}, heat output at a) 0 b) +8°C source temp.	11.0	11.7	kW
N_{hp}, heat input (including 84 % heater efficiency)	9.0		kW
N_{aux}, electrical input (fans, pumps, controls)	0.2		kW

3. Back-up: type: boiler
fuel: gas
% max. capacity: 100

4. Controls: capacity: / defrost: / back-up: not known

5. Performance

air temp. °C	source temp. °C	heating/cooling output, N_{hr}, (kW) a)	b)	heating/cooling CoP_{eff} a)	b)	CoP'_{eff} a)	b)
− 10	− 10	10.6	-	1.1		1.0	
0	0	11.0	-	1.2		1.1	
+ 10	+ 10	12.1	12	1.3		1.25	
+ 25	+ 25	-	5.3		0.55		0.5
+ 35	+ 35	-	4.3		0.45		0.4

6. Capital Costs*)

output, N_{hr} (kW)	3/4	10/12	15/20	50	100	400	≥ 2000
unit cost (DM)	not	a) 3200					
installed cost (DM)	applicable	b) 5700		~ DM 500/kW			

*) estimated costs at 1979 prices and exchange rates without taxes; not including heat distribution or back-up costs

7. Maintenance costs

3 % of installed capital cost per annum

8. Service life in years

source equipment: / heat pump: / drive: 10/15
weighted mean: 10/15

9. Year of introduction: 1985

Profile No 15

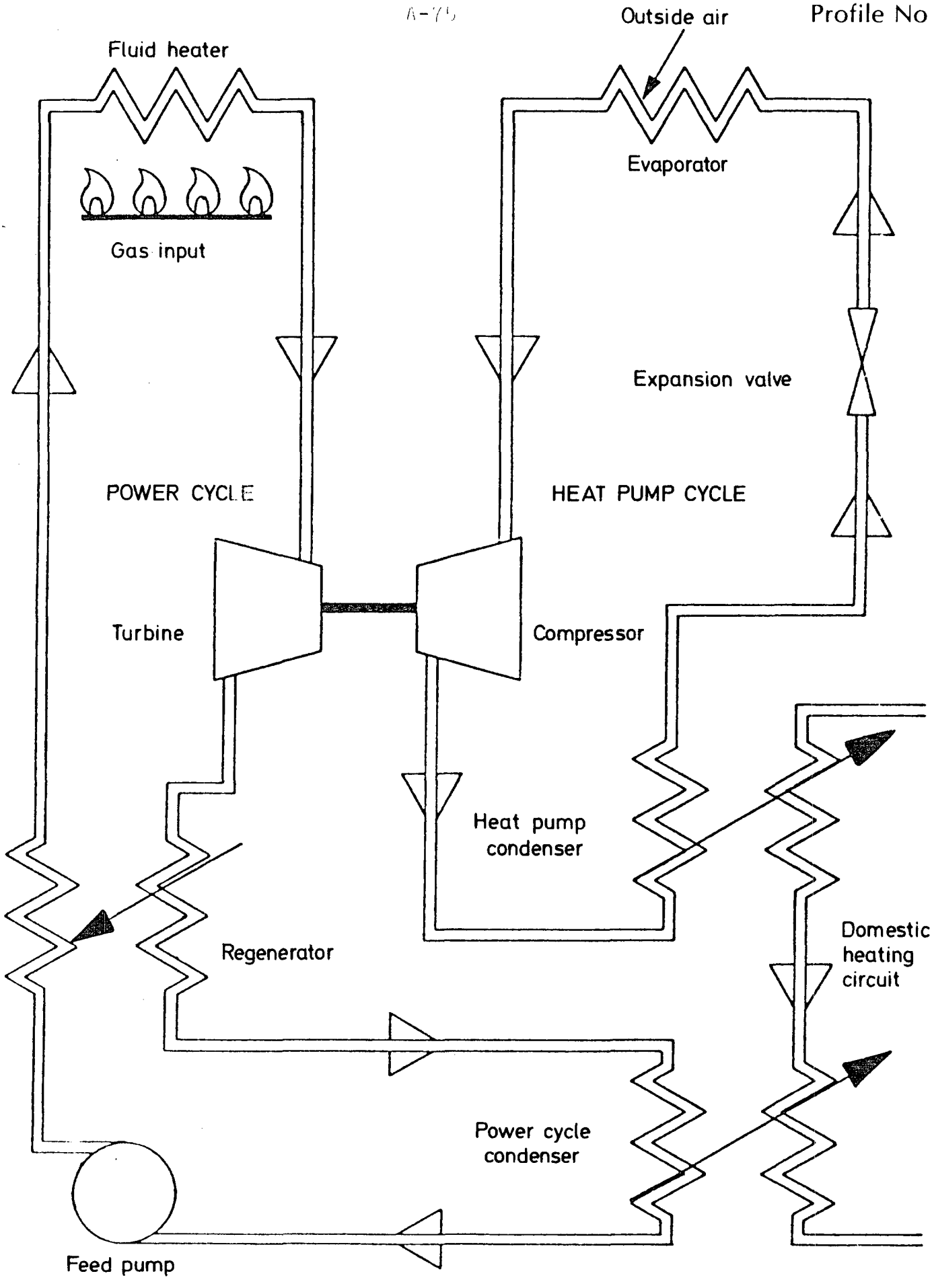

Schematic Layout

I. E. A. Study Advanced Heat Pump Systems.

Operating Characteristics of Advanced Heat Pump Systems

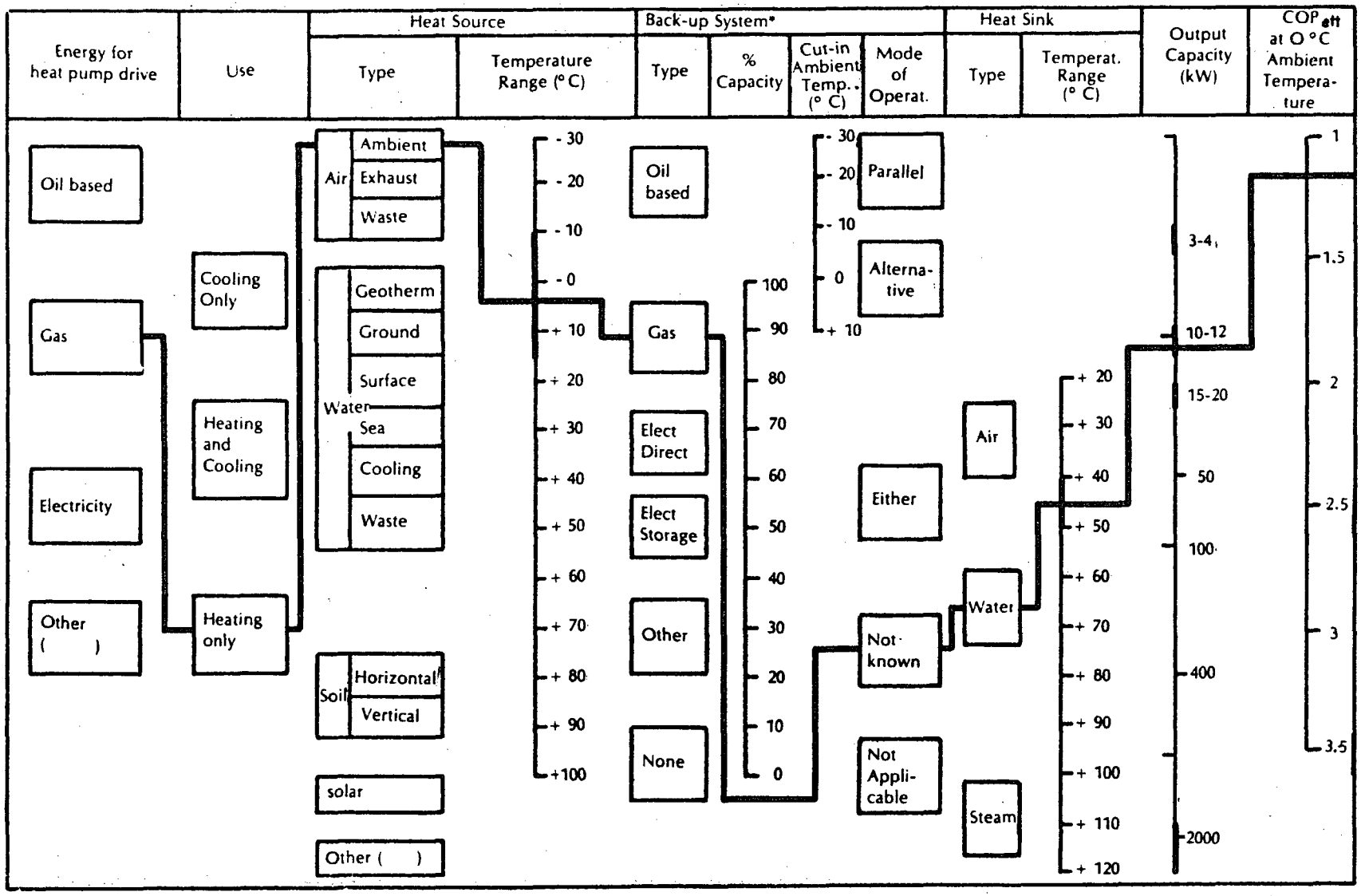

* Not emergency

Profile No 15

Profile No 15

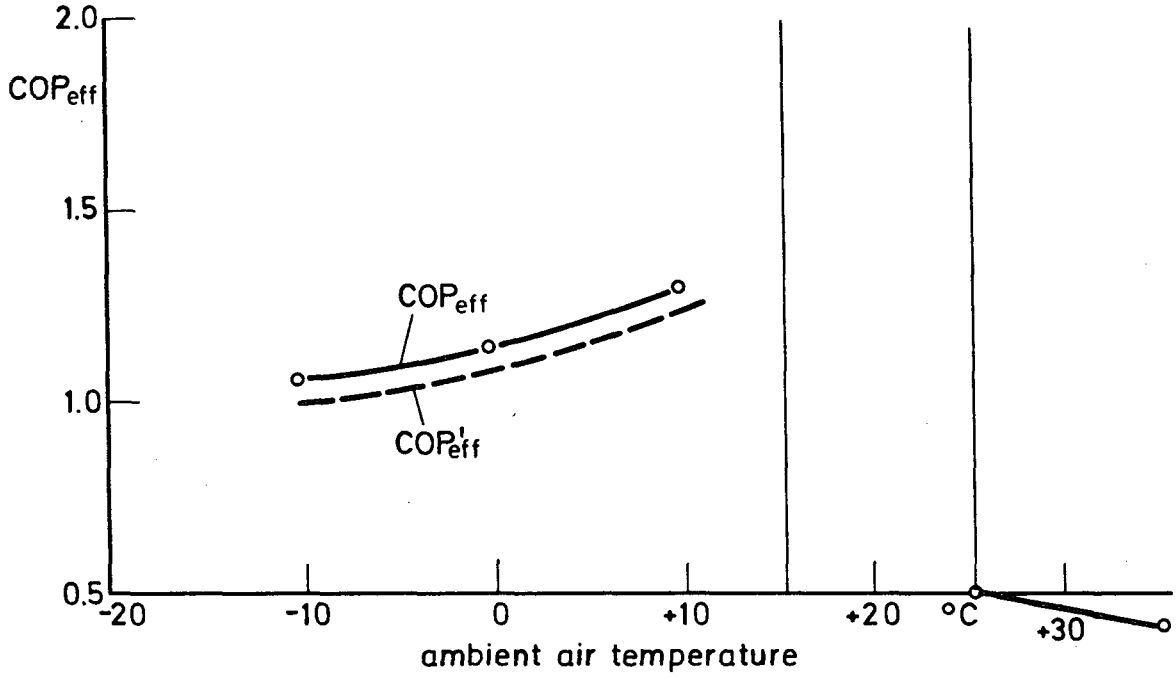

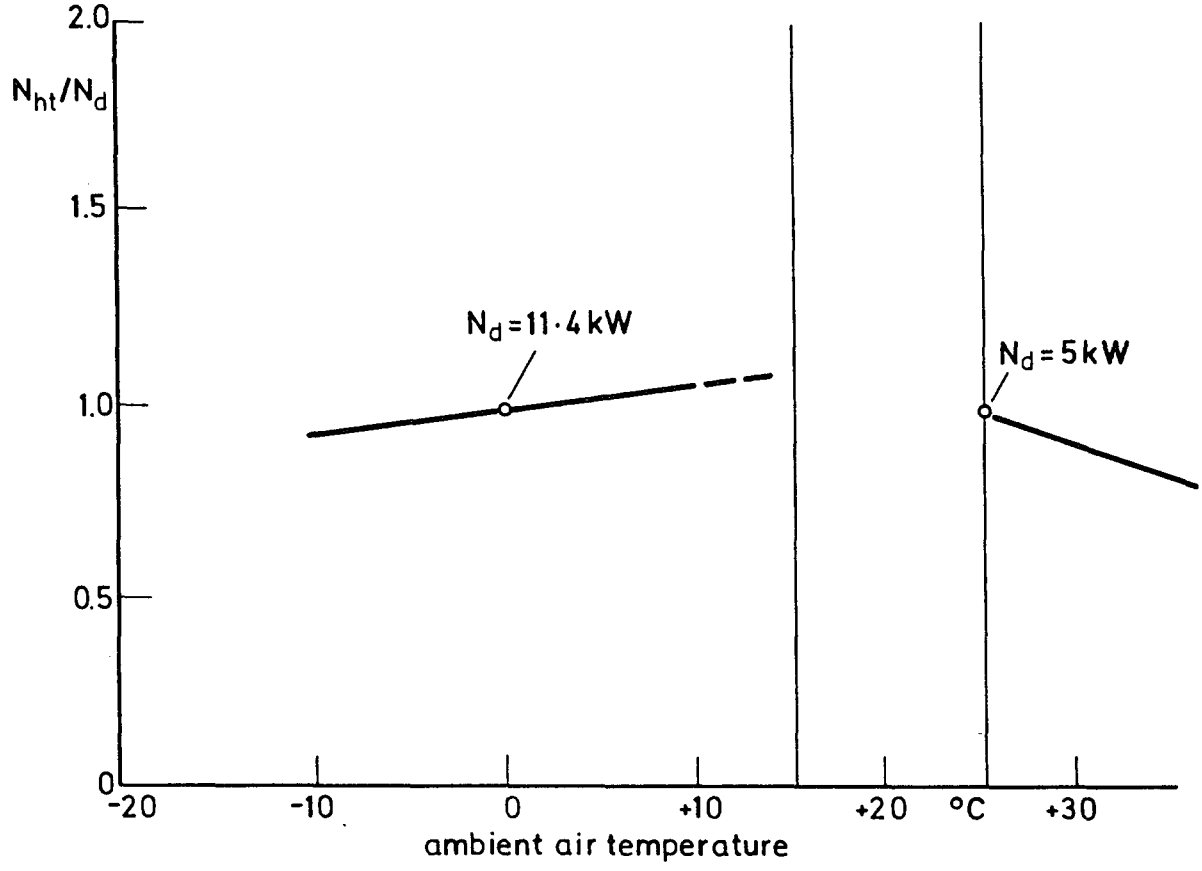

Profile No. 15

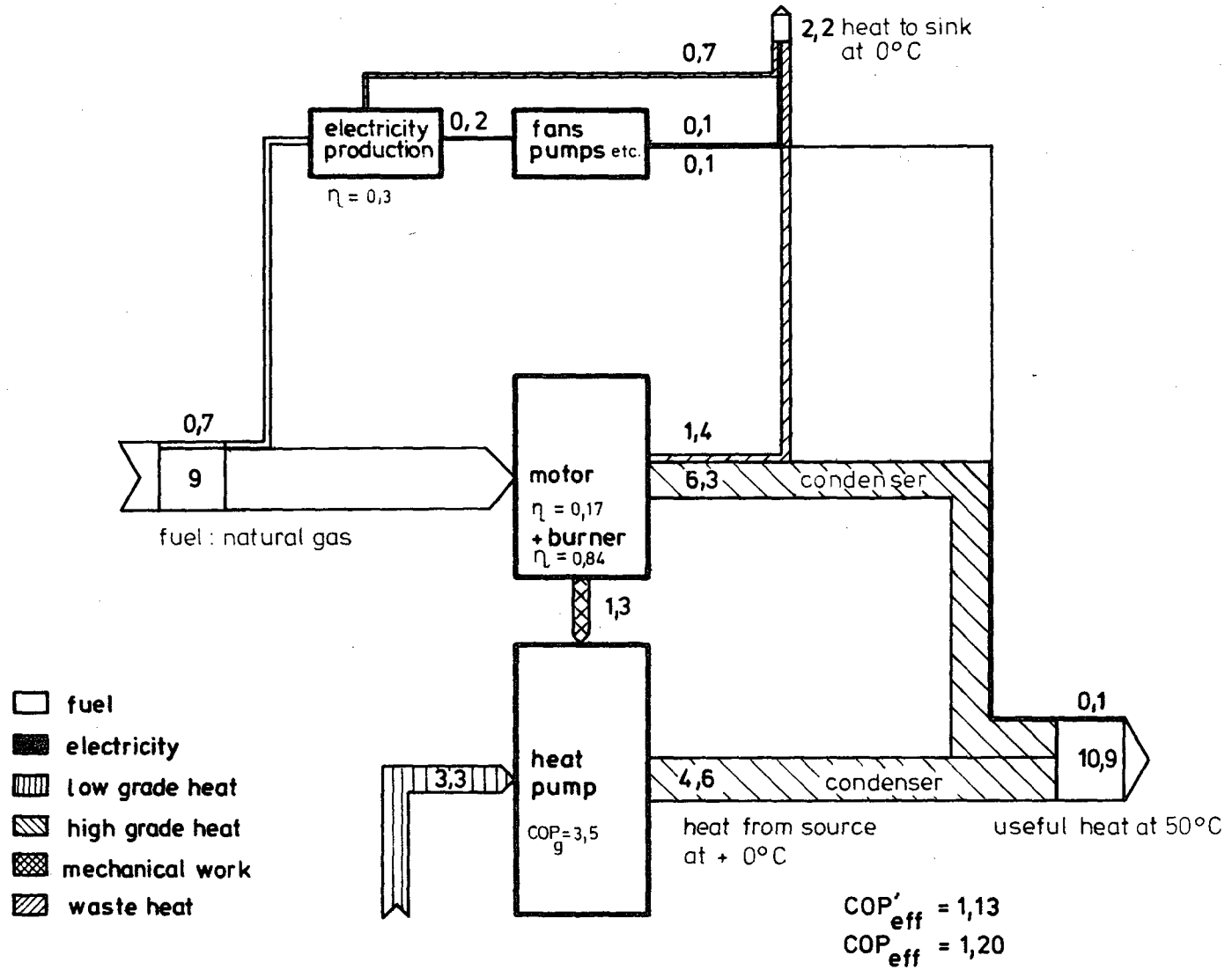

SYSTEM TYPE: Brayton-Rankine

Profile No 16

1. Description

Heat Pump cycle: reversed Rankine; centrifugal compressor
working fluid: R12
source: ambient air
sink: air

Drive cycle: Brayton; gas turbine
working fluid: air
fuel: natural gas
use: commercial space heating and cooling

2. Design data

N_{hu}, heat output at +7 °C source temp. 30.8 kW
N_{hp}, heat input (including 90% heater efficiency) 22.5 kW
N_{aux}, electrical input (fans, pumps, controls) 2.5 kW

3. Back-up:

type: not necessary, designed for cooling load
fuel: -
% max. capacity: -

4. Controls:

capacity: modulation or on/off control of burner
defrost: not known
back-up: not necessary

5. Performance

air temp. °C	source temp. °C	heating/cooling output, N_{hu}, (kW)	heating/cooling	
			CoP_{eff}	CoP'_{eff}
- 10	- 10	-	-	-
0	0	35	1.15	1.0
+ 10	+ 10	30.8	1.23	1.0
+ 25	+ 25	-	-	-
+ 35	+ 35	35	1.18	1.0

6. Capital Costs*)

output, N_{hu} (kW)	3/4	10/12	15/20	50	100	400	≥ 2000
unit cost (DM)				10,250			
installed cost (DM)				22,250			

*) estimated costs at 1979 prices and exchange rates without taxes; not including heat distribution or back-up costs

7. Maintenance costs

1. % of installed capital cost per annum

8. Service life in years

source equipment: 15
heat pump: 15
drive: 10
weighted mean: 12

9. Year of introduction: 1985/1988

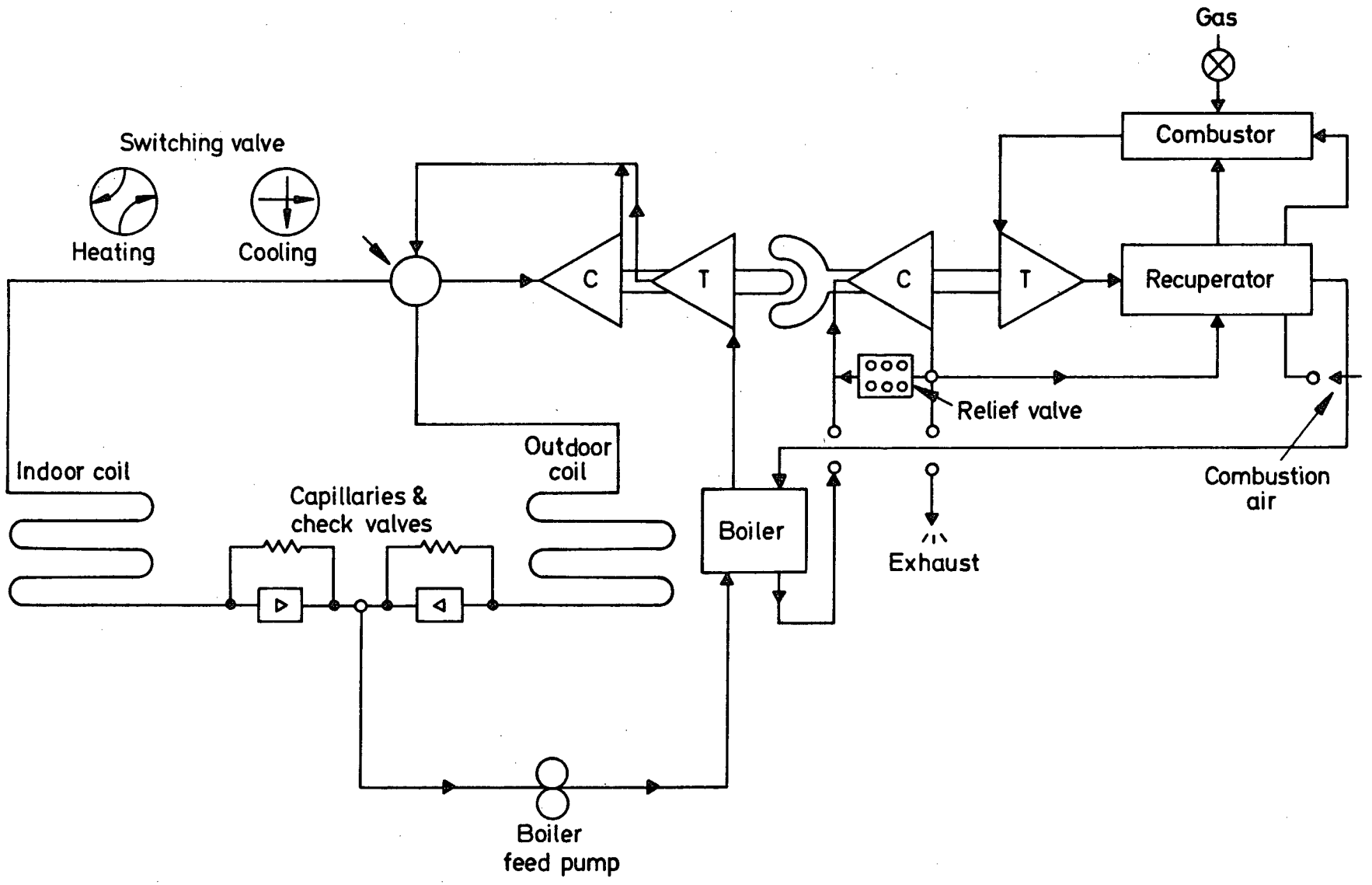

Schematic diagram

I. E. A. Study Advanced Heat Pump Systems.

Operating Characteristics of Advanced Heat Pump Systems

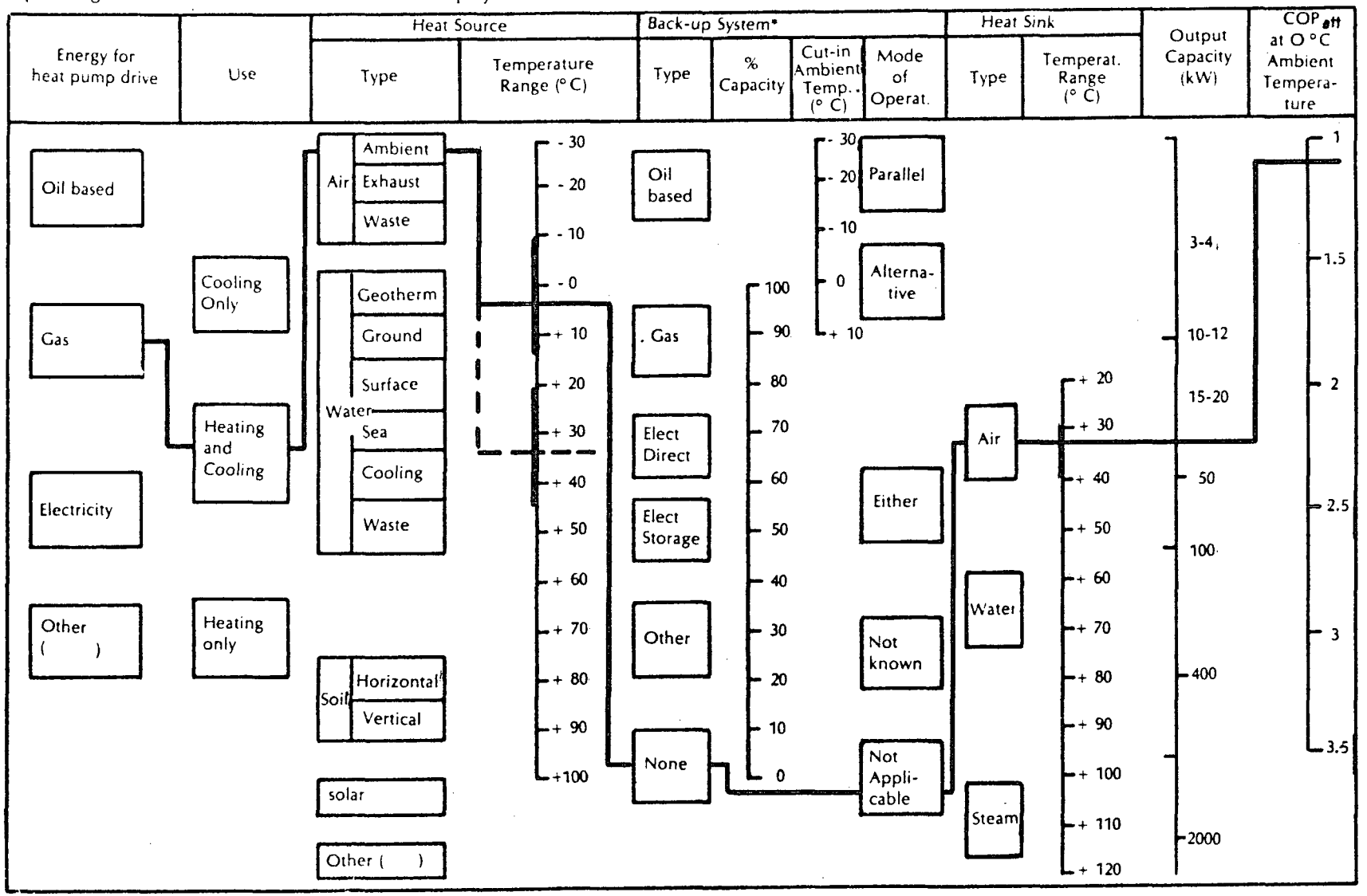

* Not emergency

Profile No 16

Profile No 16

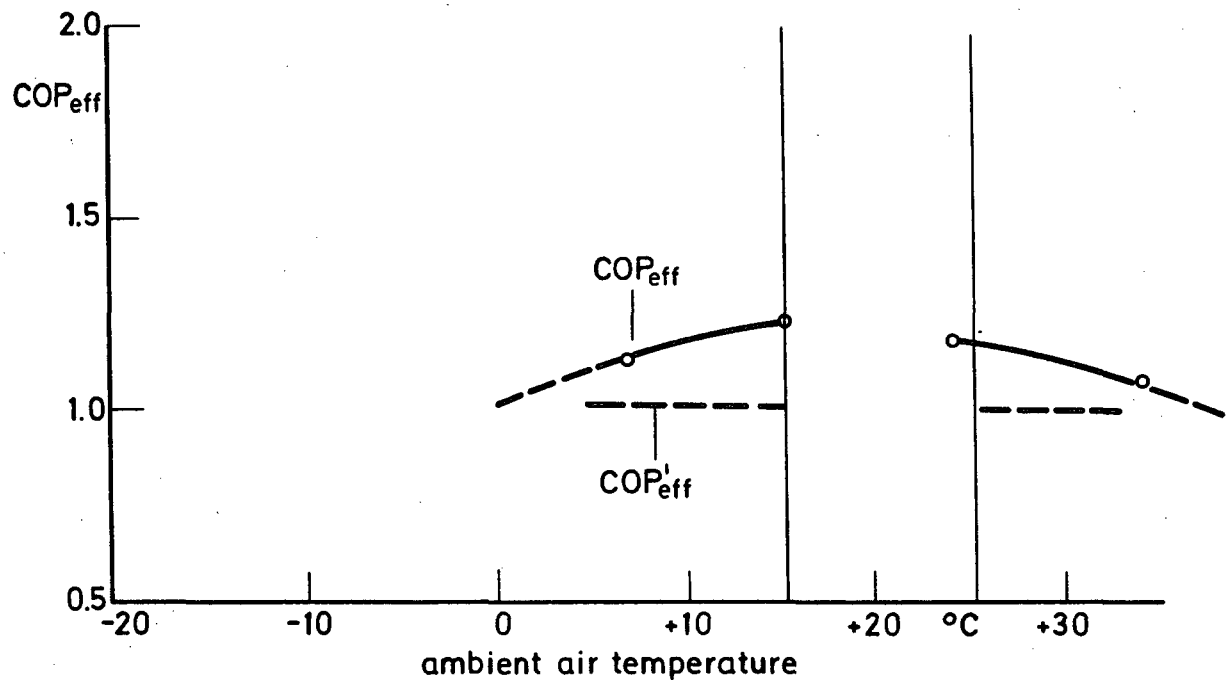

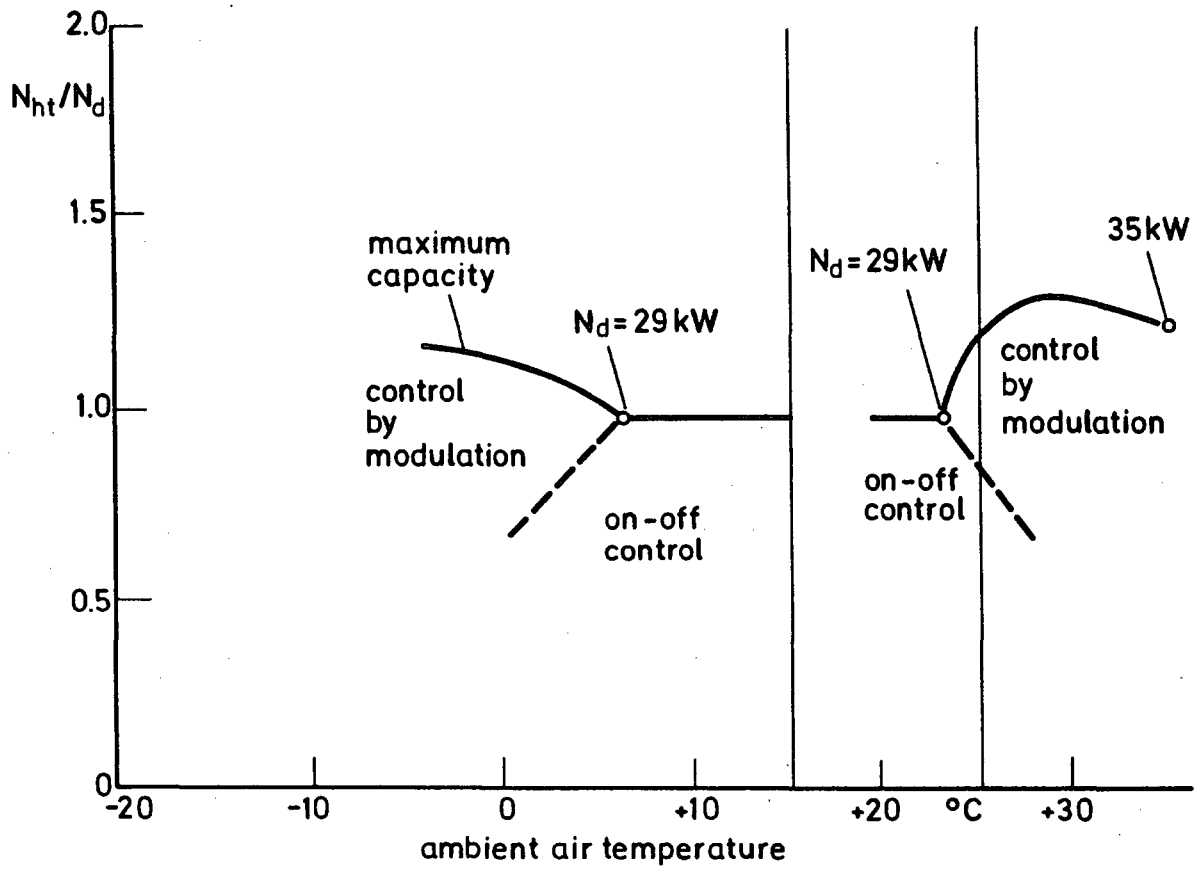

Profile No.16

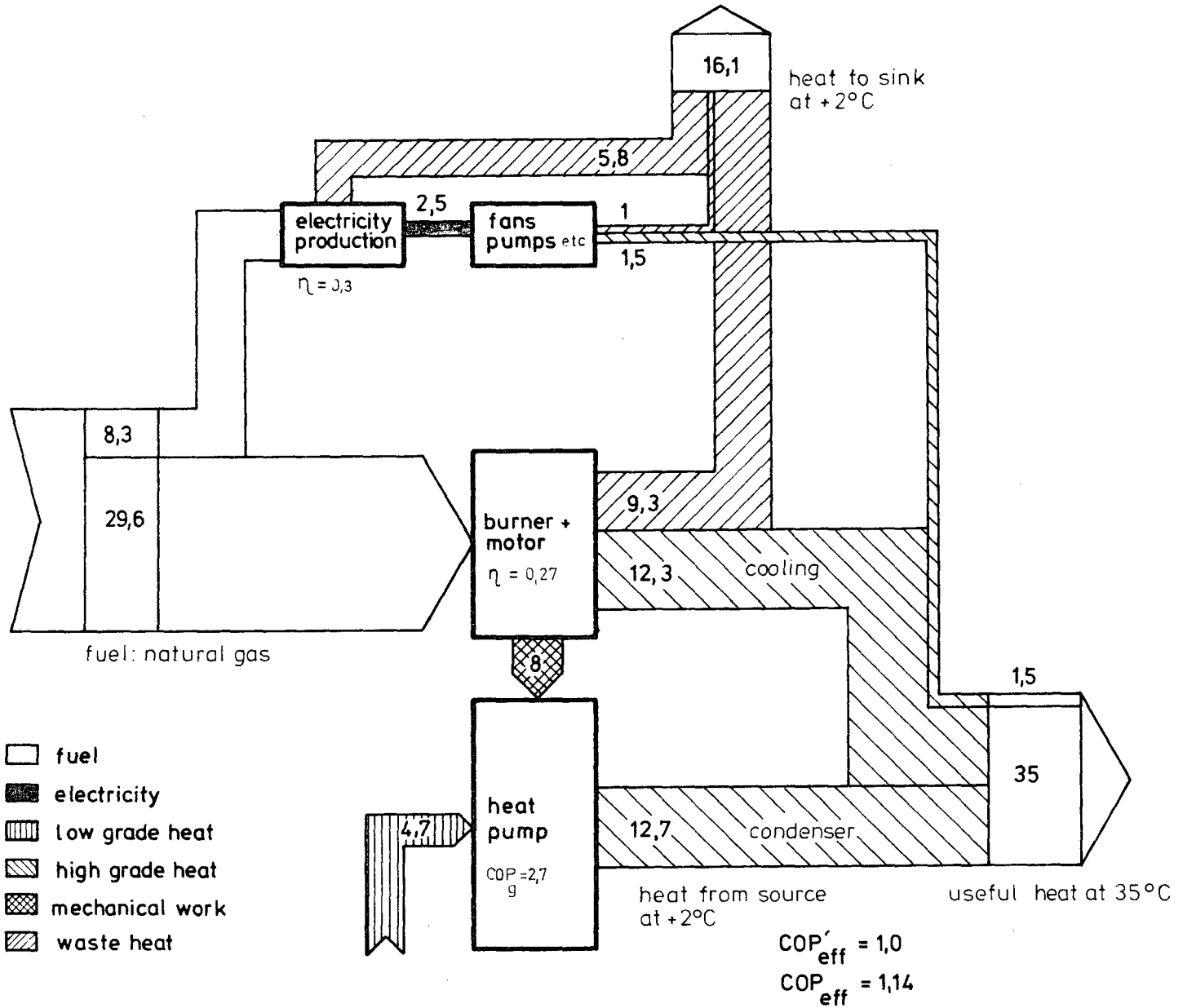

SYSTEM TYPE: single stage absorption — Profile No 19

1. **Description**

Heat Pump cycle: single stage absorption
working fluid: $LiBr-H_2O$
source: waste water 30 to 60°C
sink: water, 60 to 90°C

Drive cycle: } not applicable
working fluid:
fuel:
use: district heating and commercial building space and water heating

2. **Design data**

N_{hc}, heat output at 50 °C source temp.	8750	kW
N_{hp}, heat input (including – % heater efficiency)	6400	kW
N_{aux}, electrical input (fans, pumps, controls)	141	kW

3. **Back-up:** type: none
fuel:
% max. capacity:

4. **Controls:** capacity: not known
defrost: } not necessary
back-up:

5. **Performance**

air temp. °C	source temp. °C	heating/cooling output, N_{hc}, (kW)	heating/cooling	
			CoP_{eff}	CoP'_{eff}
– 10 0 + 10	50 mean (range 30 to 60)	8750	1.37	1.29
+ 25 + 35	} not applicable			

6. **Capital Costs**[*)]

8750

output, N_{hc} (kW)	3/4	10/12	15/20	50	100	400	≥ 2000
unit cost (DM)							70.4×10^4
installed cost (DM)							120×10^4

*) estimated costs at 1979 prices and exchange rates without taxes; not including heat distribution or back-up costs

7. **Maintenance costs**

1.. % of installed capital cost per annum

8. **Service life in years**

source equipment: } 15
heat pump:
drive:
weighted mean: 15

9. **Year of introduction:** 1982

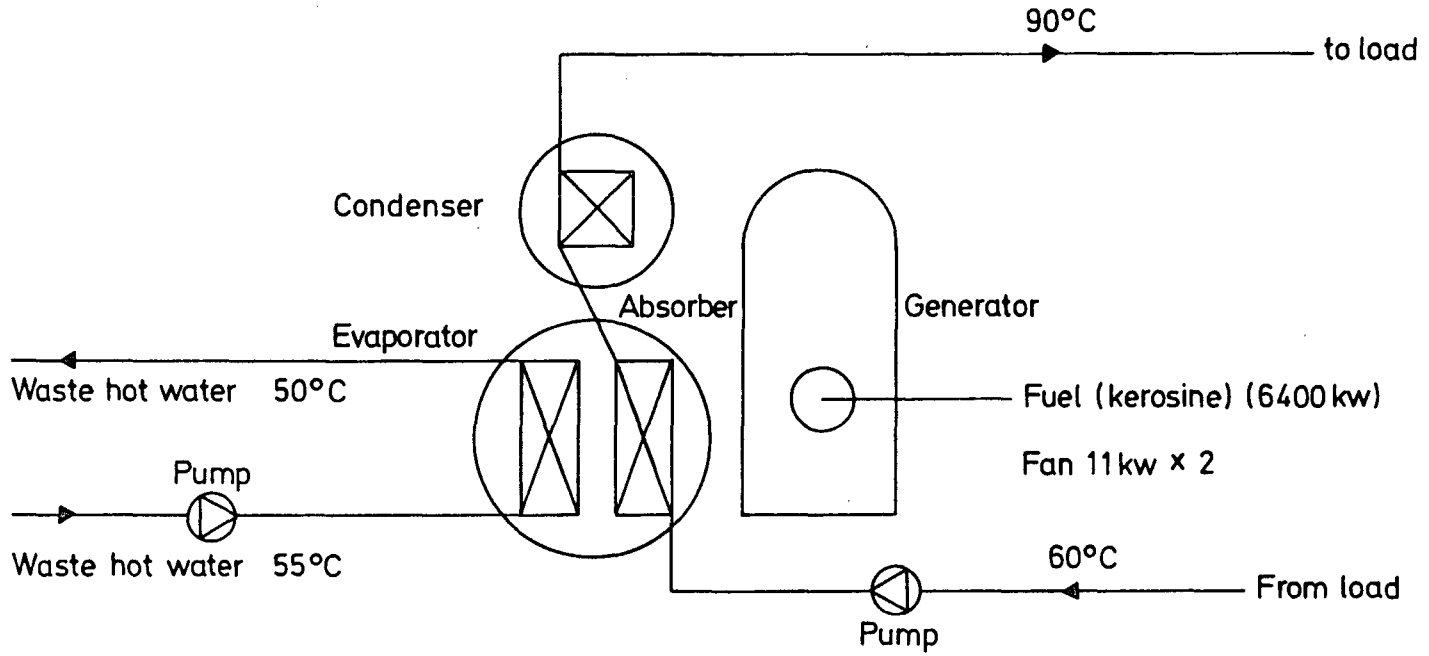

Refrigerant pump 2.2 kw
Absorbent pump 4.8 kw

Evaporator	3500 kw	Heat input	fuel	6400 kw, fan (burner) 22 kw, pump (ref., abs.) 7 kw,
Generator	5250 kw		total	6431 kw
Condenser	3850 kw	Heat output		8750 kw (from condenser and absorber)
Absorber	4900 kw	Auxiliaries		110 kw
		COP		1.34 (= 8750 / 6541)

Schematic diagram

I. E. A. Study Advanced Heat Pump Systems.

Operating Characteristics of Advanced Heat Pump Systems

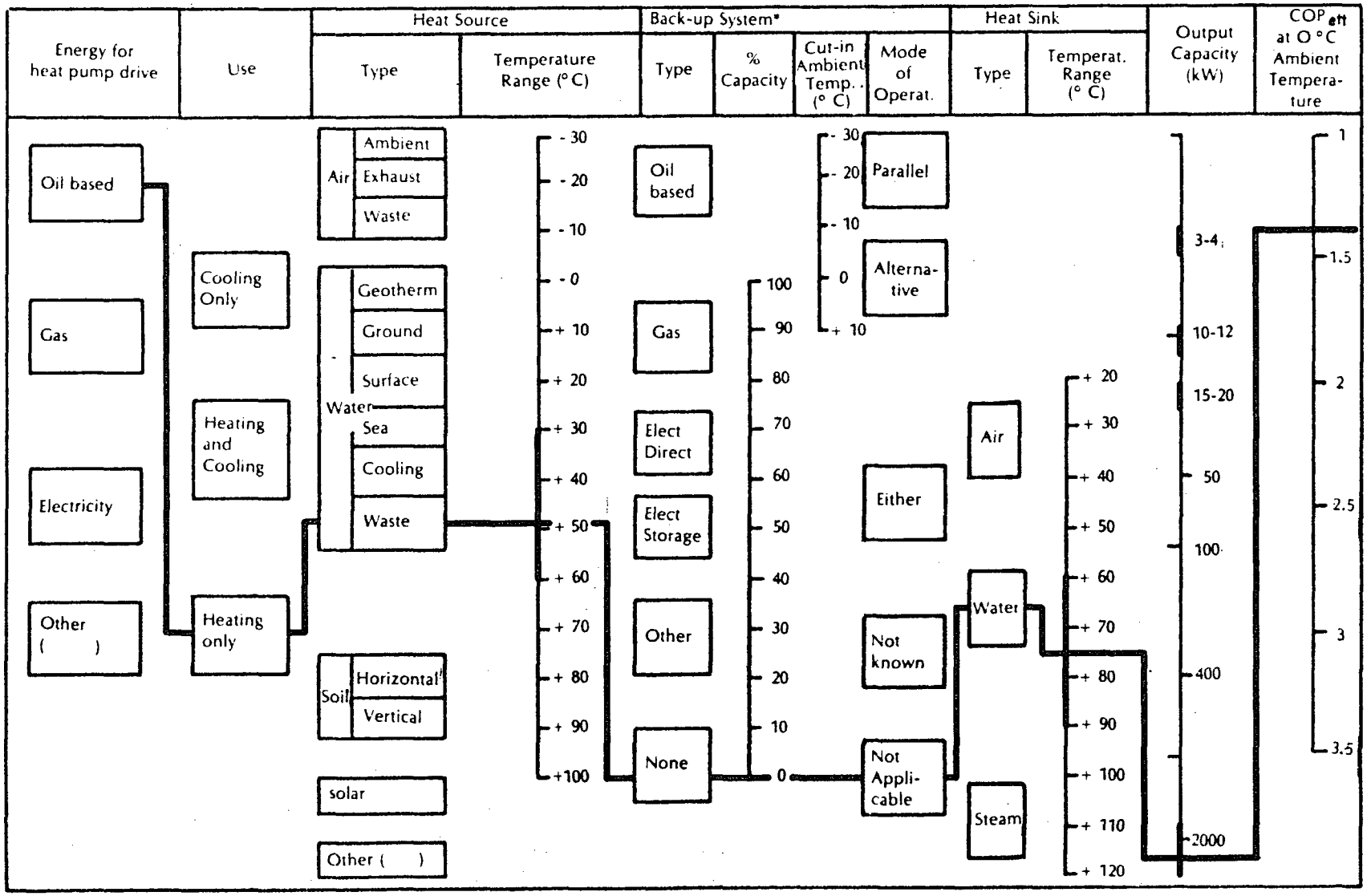

* Not emergency

Profile No 19

Profile No 19

Performance graphs not available

Profile No. 19

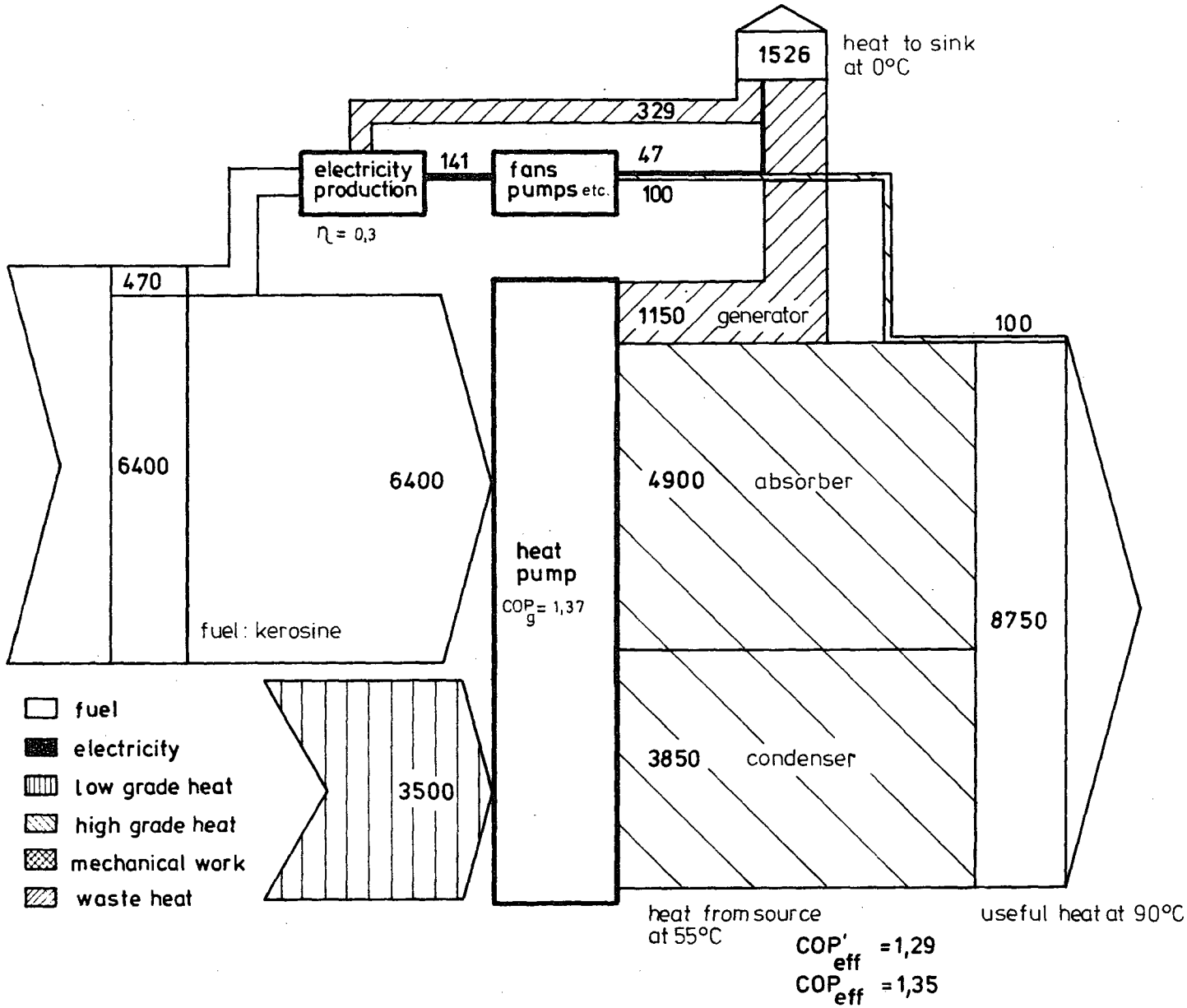

SYSTEM TYPE: combined compression-absorption — Profile No 20

1. **Description**

		first stage	second stage
Heat Pump	cycle:	electric-reversed Rankine	absorption
	working fluid:	R 114	LiBr-H_2O
	source:	waste water: feed 30 to 60°C	
	sink:	water: feed 100 to 150°C; return 40 to 70°C	
Drive	cycle:	electric motor	
	working fluid:	-	
	fuel:	-	
	use:	district heating and commercial space and water heating	

2. **Design data**

N_{hr}, heat output at 60 °C source temp.	17400	kW
N_{hp}, heat input (including - % heater efficiency)	0	kW
N_{aux}, electrical input (fans, pumps, controls)	6200	kW

3. **Back-up:** type: not necessary
   fuel: -
   % max. capacity: -

4. **Controls:** capacity: not known
   defrost: } not necessary
   back-up: }

5. **Performance**

air temp. °C	source temp. °C	heating/cooling output, N_{hr}, (kW)	heating/cooling	
			CoP_{eff}	CoP'_{eff}
- 10 0 + 10	60	17400	3.0	0.86
+ 25 + 35	not applicable			

6. **Capital Costs**[*)]

output, N_{hr} (kW)	3/4	10/12	15/20	50	100	400	17,400 ≥ 2000
unit cost (DM)							320×10^4
installed cost (DM)							420×10^4

*) estimated costs at 1979 prices and exchange rates without taxes; not including heat distribution or back-up costs

7. **Maintenance costs**

   1.5 % of installed capital cost per annum

8. **Service life in years**

source equipment:	15
heat pump:	20
drive:	25
weighted mean:	20

9. **Year of introduction:** 1982

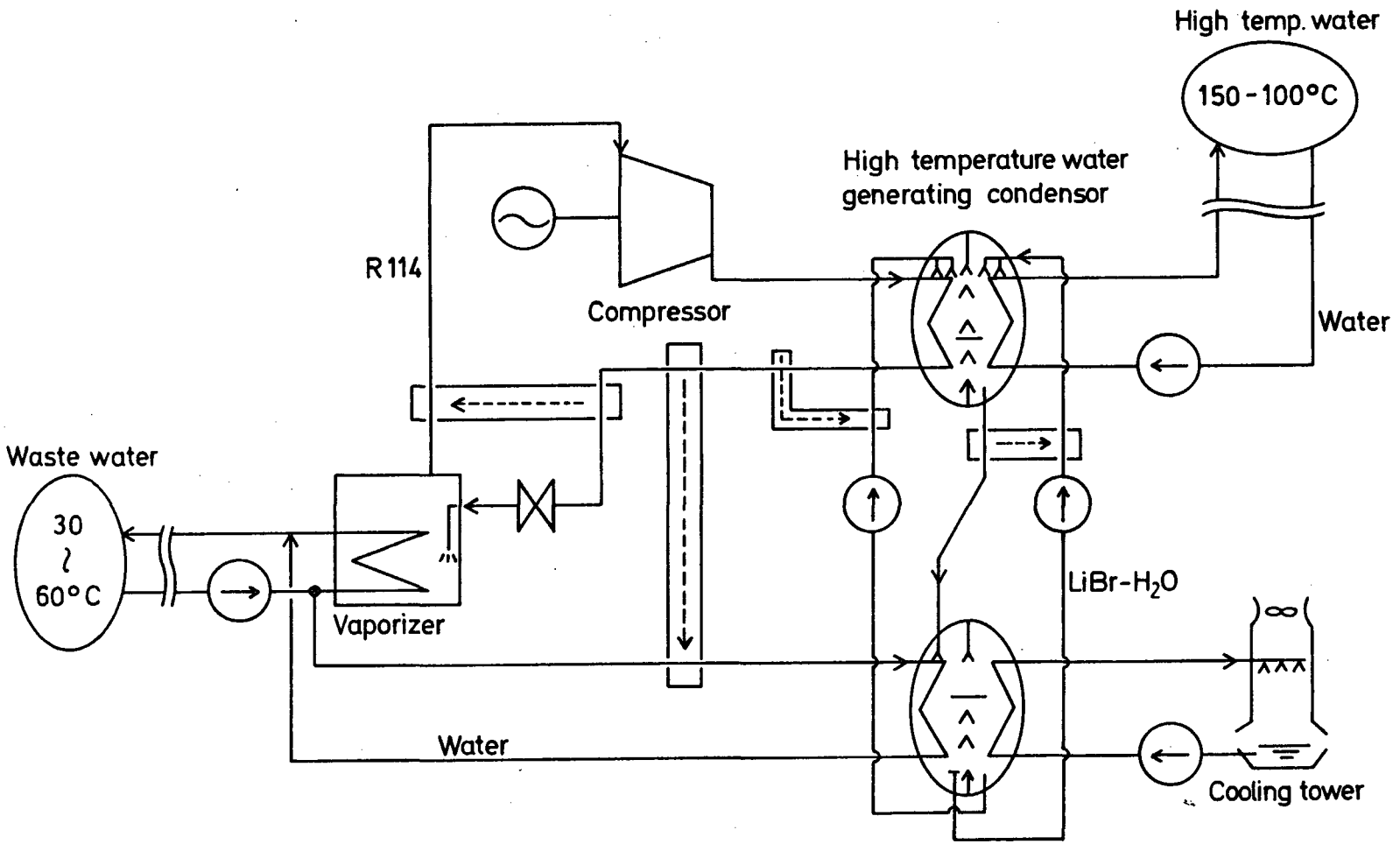

Schematic diagram

Profile No 20

I. E. A. Study Advanced Heat Pump Systems.

Operating Characteristics of Advanced Heat Pump Systems

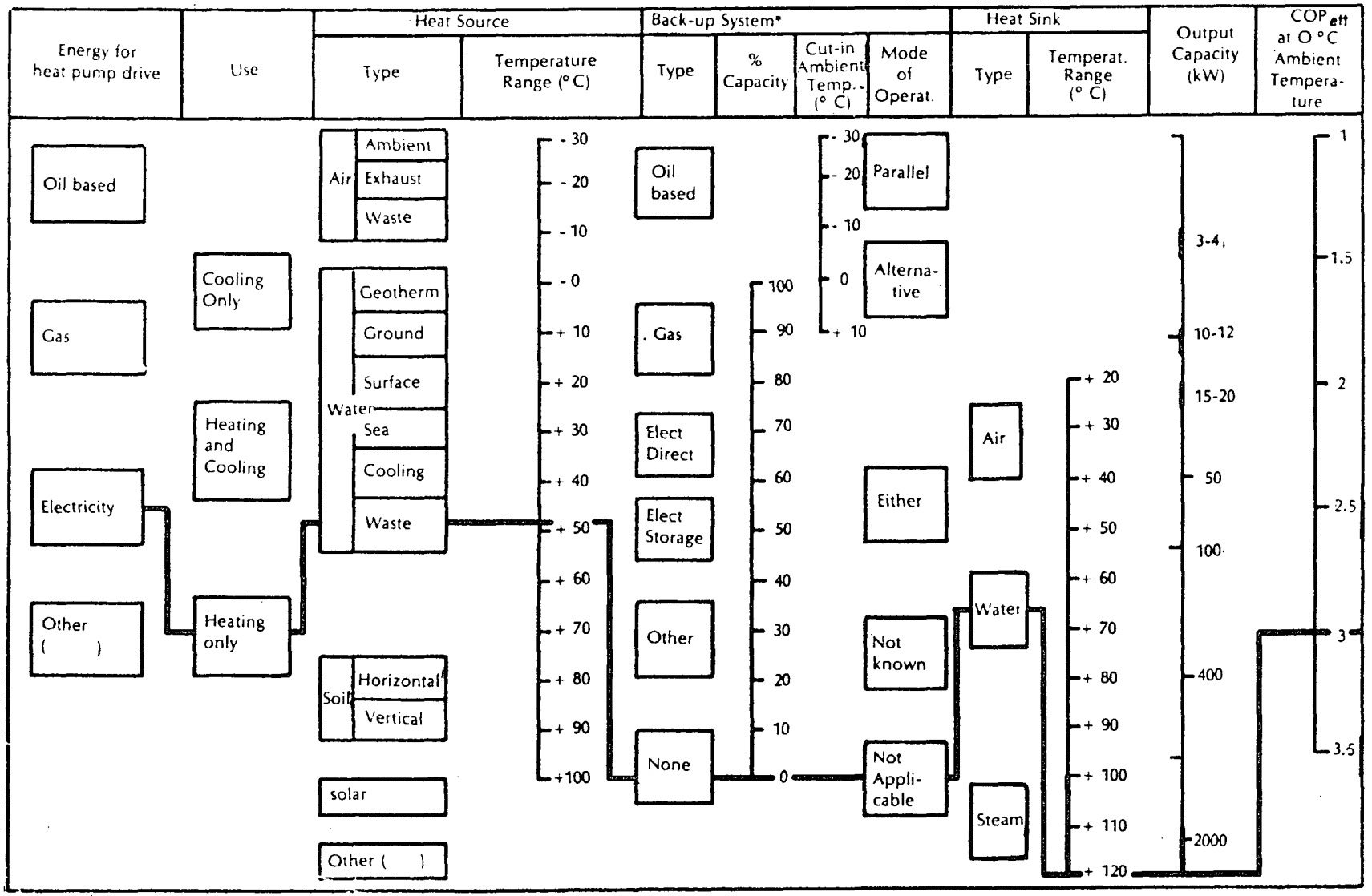

* Not emergency

Profile No 20

Performance graphs not available

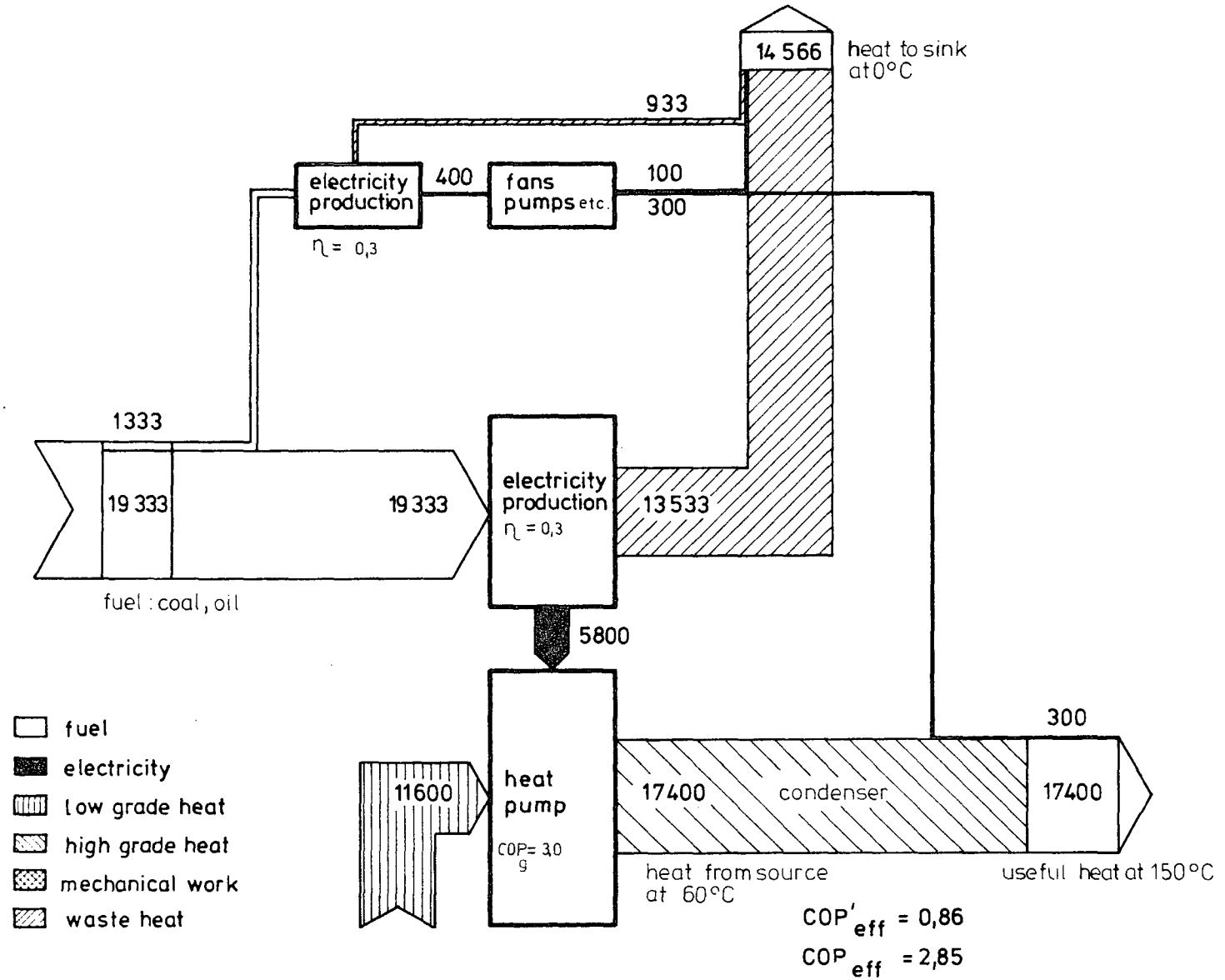

Profile No. 20