ORNL/Sub--80-7800/2

DE84 002988

ENERGY DIVISION

STATE-OF-THE-ART SURVEY OF EXISTING KNOWLEDGE FOR THE DESIGN OF GROUND-SOURCE HEAT PUMPS

D. A. Ball
R. D. Fischer
S. G. Talbert

BATTELLE COLUMBUS LABORATORIES

and

D. Hodgett
F. Auer

BATTELLE INSTITUT e.v.
FRANKFURT, FEDERAL REPUBLIC OF GERMANY

Manuscript completed August 1982
Date published November 1983

Prepared by

BATTELLE COLUMBUS LABORATORIES
505 King Avenue
Columbus, Ohio 43201

under

Subcontract 7800-19X06

with

OAK RIDGE NATIONAL LABORATORY
Oak Ridge, Tennessee 37831
operated by
UNION CARBIDE CORPORATION
for the
U.S. DEPARTMENT OF ENERGY
under
Contract W-7405-eng-26

Preface

This report is one of a series of three (3) reports describing work undertaken for ORNL to assess the potential of ground-coil heat pump technology. The assessment focused on ground-coil heat exchanger design methods and related models and evaluated the performance and economics of three major design configurations for ground-coupled systems. Specific report titles include:

- "State-of-the-Art Survey of Existing Knowledge for the Design of Ground-Source Heat Pumps"
- "Models for Simultaneous Heat and Moisture Transfer in Soils"
- "Technical and Economic Feasibility of Horizontal, Multiple Shallow-Well, and Deep-Well Ground Coupling"

DISCLAIMER

This report was prepared as an account of work sponsored by an agency of the United States Government. Neither the United States Government nor any agency thereof, nor any of their employees, makes any warranty, express or implied, or assumes any legal liability or responsibility for the accuracy, completeness, or usefulness of any information, apparatus, product, or process disclosed, or represents that its use would not infringe privately owned rights. Reference herein to any specific commercial product, process, or service by trade name, trademark, manufacturer, or otherwise does not necessarily constitute or imply its endorsement, recommendation, or favoring by the United States Government or any agency thereof. The views and opinions of authors expressed herein do not necessarily state or reflect those of the United States Government or any agency thereof.

STATE-OF-THE-ART SURVEY OF EXISTING KNOWLEDGE FOR THE DESIGN OF GROUND-SOURCE HEAT PUMPS

ABSTRACT

The objectives of the program reported here were to gather design and performance information on historical and current ground-coil heat-pump systems, to assess the adequacy of available design methods, and to define near-future R&D needs to promote the use of this technology.

The project was generally separated into two parts: (1) a review of the North American technology conducted by Battelle-Columbus, and (2) a review of European technology conducted by Battelle-Frankfurt.

The report includes descriptions of basic ground-coil design configurations, operating experience, design methodologies, and reviews of costs of existing installations.

It is found that further design-method development efforts are necessary to provide installers and manufacturers with pertinent design information in order to stimulate further implementation of ground-coupled heat pumps in the United States. Furthermore, a research effort is needed to develop parametric data on the design and performance of a ground-coil during cooling using heat and moisture models.

STATE-OF-THE-ART SURVEY OF EXISTING KNOWLEDGE FOR THE DESIGN OF GROUND-SOURCE HEAT PUMPS

SUMMARY

A ground-coil heat-pump system is defined as a heat pump in which the outdoor or evaporator coil either is placed directly in the ground or exchanges heat with the ground through a secondary fluid (usually either water or antifreeze solution) which is circulated through the ground in a closed loop. This differs from an air-source system which uses outdoor air as a heat source for the evaporator. It also differs from a well-water system which usually involves bringing well water to the evaporator and then either reinjecting the well water or discharging it on the surface; thus, well-water systems can generally be classed as open loop whereas ground-coil systems can be classed as closed loop. Hybrid systems using combination ground coil/air source or ground coil/well water are possible, sometimes desirable, and are currently used in some instances in both Europe and the U.S today. However, this study concentrated on closed-loop ground-coil heat-pump technology.

The objectives of this program were to gather design and performance information on historical and current ground-coil heat-pump systems, to assess the adequacy of available design methods, and to define near-future R&D needs to promote the use of this technology.

The project was generally separated into two parts: (1) a review of North American technology being conducted by Battelle-Columbus, and (2) a review of European technology being conducted by Battelle-Frankfurt.

This project uncovered a substantial volume of historic and current research on ground-coil heat-pump technology. Approximately 30 individual ground-coil heat-pump design and simulation methodologies were studied. In addition, numerous visits and phone contacts were made throughout Europe and North America to obtain information on the status of various ground-coil activities. A newsrelease describing this study was issued and resulted in a significant number of individuals and local installers responding with information on their experience and activities in ground-coil heat-pump systems.

Ground-coil heat-pump development efforts can be separated into two general time periods for both Europe and the U.S. The first of these is post-World War II (1946-1953) during which a number of experimental and commercial installations were made. A number of design parameters were evaluated during this time period and some design guidelines were established including some graphical design procedures based on classical line source heat transfer theories combined with empirical data. However, in general, these design procedures were considered inadequate at the time for general use. Nevertheless, this early work did define and experimentally evaluate most all reasonable ground-coil configurations being considered today. Valuable experimental data have been published from this early work on the effect of cycling operation on soil heat transfer with sand or clay backfill.

The second time period is post-Arab Oil Embargo (1973 to present). A number of experimental and design-oriented programs were begun in this period and many are continuing today. The most notable advancement in ground heat transport hardware over that of the post-World War II period involves the use of plastic pipe instead of metal pipe. Advancements have also been made in installation methods through the use of motorized trenchers and drilling machines for installing the ground coil. The advantages of using trenchers has been augmented by the use of flexible plastic pipe which can be installed in a continuous serpentine horizontal pattern. This type of system is the most common in use today.

Modern design methods differ from the earlier graphical/empirical procedures mainly by use of finite element/finite difference ground heat transport calculational procedures which are made manageable by the availability of large digital computers.

The most highly developed design models are European. These models are mostly applicable to horizontal systems for heating-only climates (air conditioning or summer heat rejection in Europe is generally not as necessary as in the U.S.). The best of these models can, according to field verification studies, account for multiple horizontal coil layers and can effectively model freezing of the earth around the coil. Some of these models have been used to generate practical design information such as the definition of cost-optimized coil diameters and spacings and guidelines on depth of burial

to assure adequate summer regeneration of the soil around the buried pipe to avoid formation of permafrost. These European models are generally not publicly available at the present time as they are held by private installer/designers or research/consultant organizations.

Models developed specifically for ground-coil heat pumps in the U.S. are generally less sophisticated and less developed than the best European models. For instance, none of the U.S. ground-coil models accounts for freezing of the soil. However, the U.S. models have been developed under government sponsorship and are generally publicly available. One U.S. model was identified that does account for freezing but this was developed for buried natural gas pipelines and would have to be adapted to heat pump applications. A Canadian model does account for freezing.

In general, models are least well developed for vertical ground-coil systems and for systems where summer heat rejection is required, such as in most of the U.S. Major uncertainties exist regarding suitable design and installation practices for systems with substantial cooling operation, due to inability of models to deal with moisture migration and soil recession away from the coil. A number of pertinent U.S. models of heat and moisture transfer in soils were developed for other applications. At least two of these models appear to be well suited, with minor changes, to predict soil temperatures and moisture content about the ground coil during summer cooling.

Despite an intense effort of experimental work in the '40s and '50s in both the U.S. and Europe, no suitable general design guidelines have been developed. European experience over the last 30 years can be summarized by a lack of use of these systems due to an economic disadvantage with respect to fossil-fueled heating systems and a lack of suitable, publicly available, design methods. Modern-day research and development efforts have utilized plastic tubing and computerized analytical techniques. Design methods have been developed in the last 10 years based on complex models that are expensive to use. There are several well-developed proprietary design and application methodologies for northern climates based on complex models. Simpler models, more suitable for on-site use, have been developed, but these are inaccurate and therefore no better than rules of

thumb. Thus, no publicly available design guidelines exist, based on theory and experiments, which enables the optimum design to be selected for each installation. In fact, in Europe, the economic optimum is often used with fossil-fuel backup.

In summary, further design-method development efforts are necessary to provide installers and manufacturers with pertinent design information in order to stimulate further implementation of ground-coupled heat pumps in the U.S. The availability of this information will also help to minimize the occurrence of inadequately designed systems which could actually inhibit acceptance of ground-coupled heat pumps. Specifically, capabilities of U.S. design methods need to be improved to handle freezing of the soil as the best privately held European models currently do. Design data for the U.S., similar to that already developed in Europe as mentioned above, also needs to be developed. Finally, a research effort is needed to develop parametric data on the design and performance of a ground-coil during cooling operation using one or more of the heat and moisture models that were developed for other applications.

TABLE OF CONTENTS

	Page
Introduction	1
Basic Ground-Coil Design Configurations	5
Horizontal Coils	5
Vertical Coils	7
Tube Materials and Brines	11
Pipe Laying Techniques	12
Use of Solar Collectors with Ground-Coupled Heat Pumps	16
Operating Experience	18
Horizontal Coils	18
Vertical Coils	21
Effects of Cycling on Soil Heat Transfer	22
Design Methodologies	25
Experience/Rules of Thumb	25
Steady-State Models	28
Transient Models	29
One-Dimensional Models	30
Two-Dimensional Models	35
Three-Dimensional Models	53
Availability of Design Methodologies	55
Review of Costs of Existing Installations	58
Availability of Design Information	60
Conclusions	62
Coil Geometry	62
System Performance	62
Reliability	63
Design Methodologies	63
Design Guidelines	65
Recommendations	66
References	67

LIST OF TABLES

Table		Page
1.	Tube Materials and Circulating Media	11
2.	Typical Overall Seasonal Performance Factors (SPF) for Ground-Coupled Heat Pumps	18
3.	Effects of Heating Operation on Overall Heat Conductivity K	22
4.	Rules of Thumb	26

LIST OF FIGURES

Figure		
1.	Single-Layer Horizontal Ground-Coil Configurations	6
2.	Vertical Coil Configurations	9
3.	GeoSystems Deep Vertical Ground Coil	10
4.	Three Basic Installation Techniques	12
5.	USA/Canada Design Methodologies	24
6.	European Design Methodologies	25
7.	Nodal Geometry for American Heliothermal Lumped-Parameter Model	34
8.	Nodal Geometry for the GROCS Serpentine Coil	38
9.	Nodal Geometry for the CONVEC Finite-Difference Model	40
10.	Nodal Geometry for the Mei/Fischer ORNL Vertical Finite-Difference Model	42
11.	Cantherm/AGA-Thermia Design Nomographs	45
12.	Nodal Geometry for the CUBE Finite-Difference Model	47
13.	Optimum Piping Size	48
14.	Optimum Maximum Heat Extraction Rate	49
15.	Piping Layout and Nodal Geometry for the ACRES Model	51
16.	Nodal Geometry and Computed Soil Temperatures for the TUD4 Model	54

FINAL REPORT

ON

STATE-OF-THE-ART SURVEY OF EXISTING KNOWLEDGE FOR THE DESIGN OF GROUND-SOURCE HEAT PUMPS

TO

OAK RIDGE NATIONAL LABORATORY
OAK RIDGE, TENNESSEE

By

David A. Ball, Robert D. Fischer, and Sherwood G. Talbert
Battelle's Columbus Laboratories

Dr. David Hodgett and Dr. Falk Auer
Battelle Institut e.V.
Frankfurt, West Germany

August 9, 1982

INTRODUCTION

A ground-coil heat pump system is defined as a heat pump in which the outdoor or evaporator coil either is placed directly in the ground or exchanges heat with the ground through a secondary fluid (usually either water or antifreeze solution) which is circulated through the ground in a closed loop. This differs from an air-source system which uses outdoor air as a heat source for the evaporator. It also differs from a well-water system which usually involves bringing well water to the evaporator and then either reinjecting the well water or discharging it on the surface; thus, well-water systems can generally be classed as open loop whereas ground-coil systems can be classed as closed loop. Hybrid systems using combination ground coil/air source or ground coil/well water are possible, sometimes desirable, and are currently used in some instances in both Europe and the U.S. today. However, this study concentrated on closed-loop ground-coil heat-pump technology.

There are some apparent advantages to ground-coil heat-pump systems. For instance, the ground exhibits less temperature variation over the year than the ambient air and thus provides potentially higher heat-pump efficiency than with air-source systems. Also, a ground-coil system does not require defrosting as do air-source systems. Well-water systems offer many of the same advantages but require a good source of well water and either a separate reinjection well or a surface drainage system which

is accessible without legal or code restrictions. Thus, ground-coil systems are believed to have wider applicability than well-water systems although there are also some locational restrictions on ground coils because adequate ground moisture must be present to insure good heat transfer between the ground and the buried coil.

Ground-coil systems present a more challenging design problem than either air-source or well-water systems. For instance, the performance of the outdoor coil on an air-source system can be readily predicted once the outdoor air temperature and humidity are known. Well-water system performance is directly related to the performance of the well which can generally be determined at the time of drilling with established well testing techniques. However, the performance of ground-coil systems is highly dependent on ground heat transfer characteristics. Soil type (clay, silt, sand, etc.) and moisture content can cause ground thermal conductivities to vary by orders of magnitude from one part of the country to another, from one lot to another within the same town, or from one point in time to another for the same lot. Thus, there are many challenges and uncertainties in designing and installing ground-coil heat pumps.

The first known record of the concept of using the ground as a heat source for a heat pump is in a Swiss patent issued in 1912 to Heinrich Zoelly[1]. Thus, the idea itself is about 70 years old.

Despite Zoelly's 1912 patent, it was not until after World War II that serious ground-coil development efforts began in both North America and Europe. This surge in interest lasted until the early 1950's when gas and oil became widely used as heating fuels.

Starting about 1946 in the U.S., 12 major ground-coil research projects were undertaken. These projects were all monitored by a joint Association of Edison Illuminating Companies-Edison Electric Institute (AEIC-EEI) committee, and the results of these projects were recorded in a series of articles in the EEI journal[2,3,4]. These projects systematically examined many ground-coil parameters including effects of pipe size, pipe spacing, depth of burial, and the effects of extended surfaces on the soil side of the pipe. Thermocouples were buried in the soil to record soil temperature as a function of time and heat extraction. Experiments included both vertical and horizontal coil configurations. They also included direct expansion of refrigerant into the ground coil and the use

of secondary fluids including water and aqueous ethylene glycol antifreeze solutions. The ground coil itself generally consisted of copper tubing for direct expansion or cast iron pipe for secondary fluids.

The AEIC-EEI heat pump committee concluded in 1953[4] that "even with this considerable amount of information (from the 12 research projects begun in 1946-1948) there is still no apparently workable design equation which can be used by the individual contractor". The head of the AEIC-EEI heat pump committee, E. R. Ambrose, summarized experience on ground-coil heat pumps in 1966[5]. Ambrose indicated that an average safe selection of horizontal ground-coil size is 200 to 400 feet of coil per ton of heat pump capacity buried 4 ft deep by 4 ft apart. However, Ambrose also concluded that the earth has not been found to be a practical and dependable heat source and sink. After a few years, it was found that the space between the earth and the pipe increased until heat transfer was no longer satisfactory even when using sand as backfill. This adverse effect does not occur, however, when the earth is used as a heat source only.

It was also during this time period that Ingersoll and Plass[6] developed the classic theory for ground pipe heat conduction. This theory is still used today as the basis for some computer simulation programs both in the U.S. and Europe which are discussed later in this report.

In Europe during the early '50s, workers in Britain and Germany were active in ground-coil heat pump research. Notable among these were Griffiths[7] and Sumner[8] in the U.K. and von Cube[9] in Germany. In Europe, Sumner and von Cube installed systems for residential heating, while Griffiths also commenced work on measurements into the properties and heat transfer within soil.

The von Cube installation (at his own house) is over 25 years old and is today still in operation recording a heating seasonal performance factor or an annual average heating coefficient of performance of about 3. The system uses direct expansion of R-22 in horizontal steel pipes placed 0.5 to 0.8 meters deep. The experience accumulated in this installation has been of great use in subsequent work on this type of system.

The next period of intense activity on ground-coil heat pumps started in Europe in 1974, following the first OPEC oil price rise, and continues to the present day. In Europe, over 30 R&D projects have been

identified concerning the development of design methods, installation techniques, or accumulation of operating experience. In addition, over 6,000 horizontal ground-coil installations have been made in Sweden, with an unknown but significant number of similar installations in Germany. All the installations are for heating only with all but a few having hydronic heat distribution systems. Horizontal coils represent the majority of installations in Europe at present, though R&D on vertical systems has in recent years been given emphasis because of the need for systems which use less land area.

In the U.S., the resurgence of activity on ground-coil systems did not occur until about 1977 to 1978 when a number of experimental and/or analytical investigations were begun. These programs involve testing of a variety of ground-coil variables and, in many cases, solar collectors have been added creating hybrid systems. In many ways, the current programs are very similar to the experimental efforts of the 1940s and 1950s. The general design guidelines developed in the earlier work have, for the most part, been reaffirmed independently by current experimental programs carried out under U.S. Department of Energy sponsorship. The most notable difference in current ground-coil heat-pump practice compared to earlier practice is the use of plastic pipe which allows continuous serpentine coils.

An unknown number of working ground-coil installations exist in the U.S., mostly installed by local contractors. Based on a response to a news release and other contacts made on this project, it is estimated that possibly as many as 1,000 such systems are active today. Both horizontal and vertical systems are being commercially installed today. These installations are widely varied in basic design and, in most cases, were designed by intuition, many times using "novel or patented ideas".

This project was undertaken with the objective of reviewing historic and current methods for designing ground-coil heat pumps. The major effort was directed at reviewing various current design methods in order to define deficiencies in ground-coil heat-pump design practices.

BASIC GROUND-COIL DESIGN CONFIGURATIONS

Ground-coil heat pump designs can be broadly classed into two categories: horizontal and vertical. Within each of these two categories, a wide variety of possibilities exist for specific geometry, installation method, materials of construction, and choice of fluid for circulating through the ground coil. The distinction between whether the system is horizontal or vertical is generally more important from a performance and operational standpoint than the other design variables mentioned above.

Horizontal systems are installed relatively close to the surface where they can be designed so that the ground is essentially self regenerating. Thus, the natural heat exchange between the ground surface and the ambient atmosphere will return the ground to its original temperature each year despite the fact that the heat pump may extract more heat during the winter than it rejects during the summer.

Vertical systems on the other hand generally extend below 10 m deep where the ground conditions are not affected by changes in the ambient atmosphere. Thus, more care must be taken to ensure a balance between heat extracted during the winter months with heat added to the ground during the summer months. This balance can be achieved by adding heat to the ground during the summer months with heat collectors on the surface (most common in Europe) or by reversing the heat pump and operating it as an air conditioner during the summer (more common in the U.S.). Regeneration is probably not required for deep wells located in areas with a high water table.

Horizontal Coils

The single layer horizontal ground coil (Figure 1) is at present the most common of all ground-coil systems in use today. The ground coil typically consists of circular plastic or metal tubes of external diameters between 20 mm and 40 mm laid at depths from 0.5 m to 2.5 m. Tube spacings vary from 0.6 m to 2.5 m.

Most modern systems today use the serpentine arrangement. This arrangement is especially attractive when flexible polyethylene or polybutylene tubing is used with low cost trenching techniques. Use of flexible

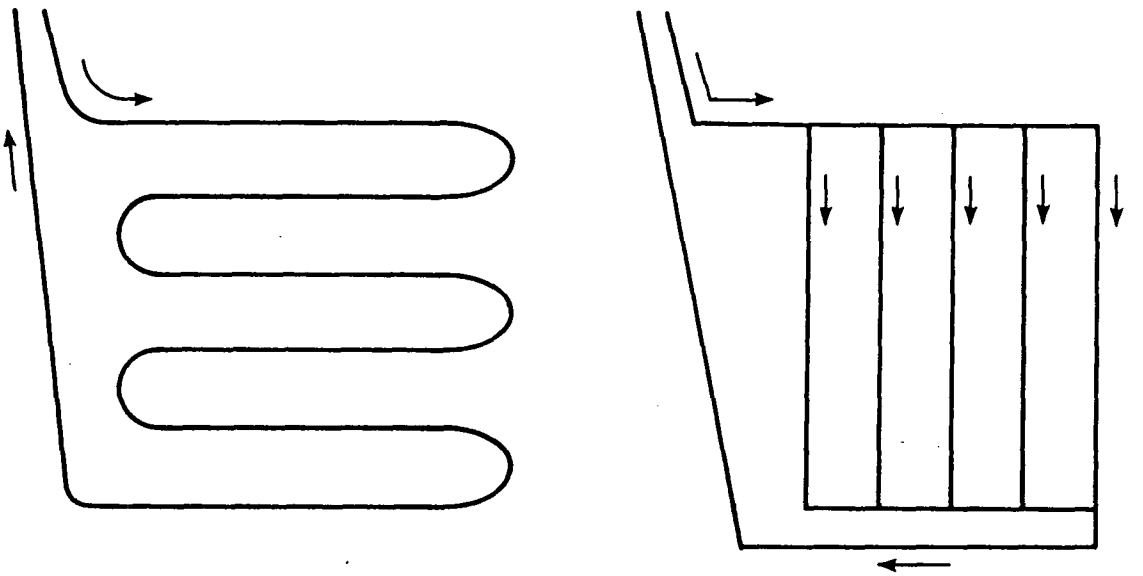

Plan View

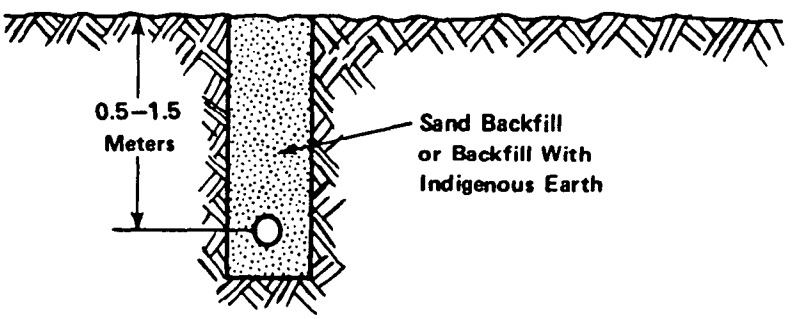

Cross Section View

FIGURE 1. SINGLE-LAYER HORIZONTAL GROUND-COIL CONFIGURATIONS

tubing minimizes the number of joints and thus leakage problems, and allows the use of low-cost trenching techniques. A single-pass grid of metal pipe connected to header manifolds is still used today but was most common in earlier work before plastic pipe became available. The grid would be expected to have slightly better thermal performance than the serpentine due to less thermal short circuiting between the outgoing and return coil sections.

A recent advance in horizontal coil design is to install a double layer with one layer at about 1 m deep and the other at about 2 m deep. This technique is currently being employed by Laborelec in Belgium[10] and Oklahoma State University in the U.S.[11]. The Oklahoma State installation involves laying a flexible pipe first at about 2 m deep, backfilling to about 1 m deep and then laying the coil back upon itself thus forming the double layer. The double layer substantially reduces the amount of land necessary for the installation.

There are also a variety of other types of horizontal (or shallow) systems being used. One type involves use of a buried tank or buried tank cluster instead of pipe grids. This type of system is currently being evaluated by Kaman Sciences under DOE sponsorship[12]. Often, buried tanks will be used in conjunction with either horizontal coils or vertical wells. The tank serves as a fluid reservoir and as a receiver for solar-heated hot water.

Other systems involve using air as the medium by which heat is exchanged with the ground. Heat is withdrawn in these systems from air in buried tiles, cement block and drainage pipe, porous volcanic soil[13], and corrugated culvert[14]. Another system which is currently being evaluated at Oak Ridge National Laboratory is based on drawing air through a crawl space to a conventional air-source heat pump[15].

Vertical Coils

Vertical ground coils are either of the shallow or deep type. Shallow coils are more common in Europe than in the U.S. and are placed about 8 to 10 m deep with about 2 to 9 m between coils. Shallow coils utilize flexible plastic tubes formed into U-tubes or hard plastic coaxial

tubes and are arranged either in circular, hexagonal, or rectangular matrices as shown in Figure 2. Circular arrangements (or hexagonal as an approximation) are favored because the cylindrical storage area formed has a minimum surface area and consequently minimal heat loss. This is particularly important for systems which are charged with heat to beyond the normal average ground temperature. Metal plate systems have been proposed and theoretically studied, but no installations of this type are known. Plastic solar collectors are used as buried vertical-plate heat exchangers in one current U.S. system[12].

Deep vertical coils are presently being installed in Germany, Sweden, and in the U.S. The German approach is to reach ground water so that the heat extraction rate per unit of tube length can be considerably increased. The most common configuration of deep vertical coils utilize coaxial tubes placed between 50 and 100 m deep depending on the depth of ground water, type of soil, etc. The Swedish installation, near Goteborg, uses flexible plastic tubes spaced apart by 10 to 20 cm in a U-tube configuration placed 35 m deep with low temperature solar collectors for regeneration. This arrangement permits a high storage density, a high storage temperature, and, consequently, a high COP for the whole system.

In the U.S., deep vertical systems also utilize coaxial U-tubes placed in direct contact with the ground. The coaxial-tube design appears to be the most common vertical-coil configuration in the U.S., although an Oklahoma consortium (Geosystems, Inc., Oklahoma State University, and Ditch Witch Corporation) are currently experimenting with a lower-cost U-tube coil configuration in which a polyethylene or polybutylene U-tube is inserted directly into a hole drilled 30 m deep.[16] No particular effort is made to maintain separation of supply and return tubes within the hole. Figure 3 shows a variant of the coaxial-tube design, installed by Geosystems, Inc., in which the well encasement is a 5-inch PVC pipe inserted to a depth of 73 m in a drilled hole.[17] This arrangement can be used with fluid temperatures below feezing with minimum cost for the antifreeze fluid, because the brine is confined to the U-tube placed within the well encasement. In a related U.S. program, direct expansion of refrigerant in various configurations of buried copper tubes is being investigated by E Tech, Inc. under DOE sponsorship.

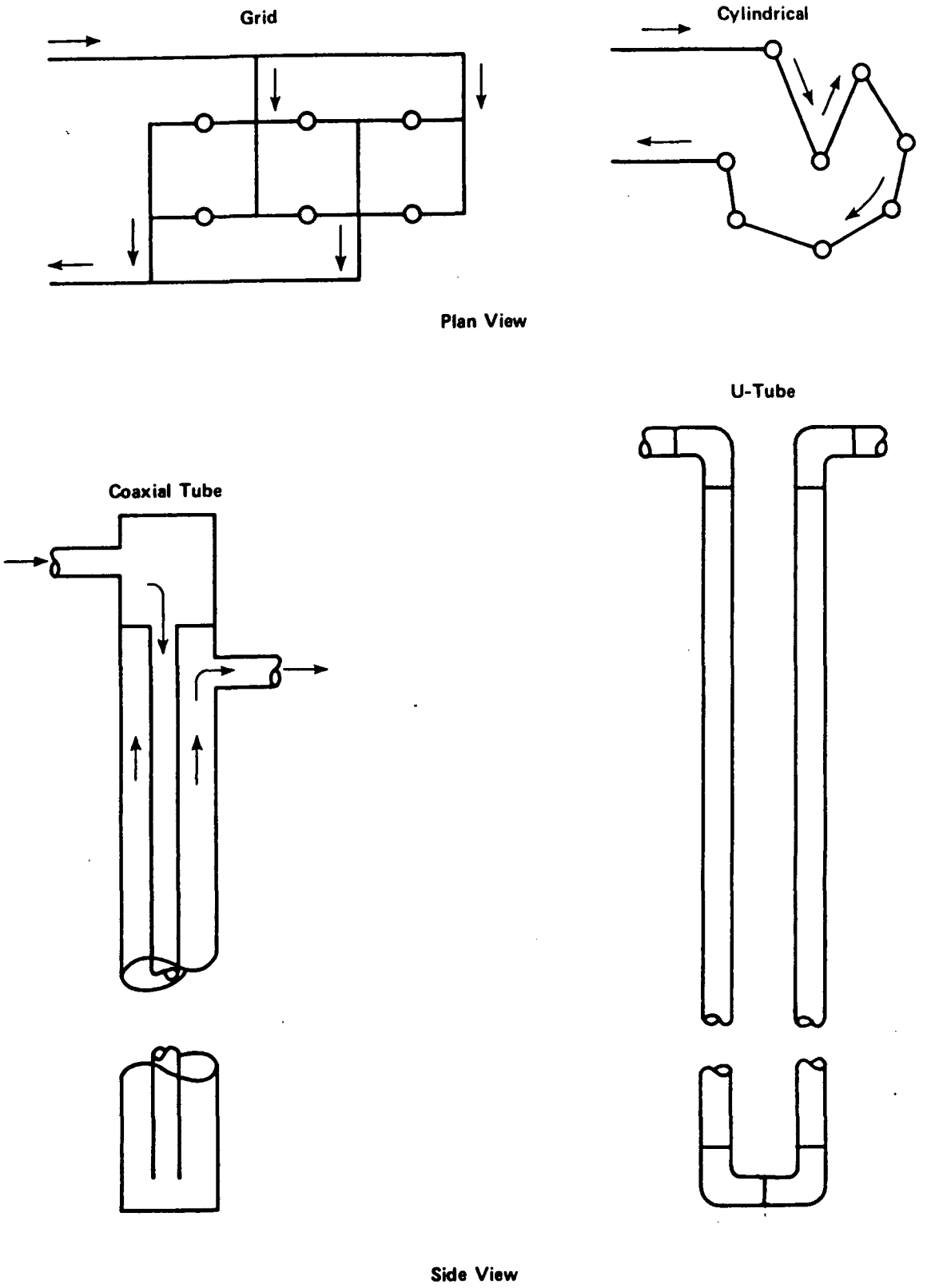

FIGURE 2. VERTICAL COIL CONFIGURATIONS

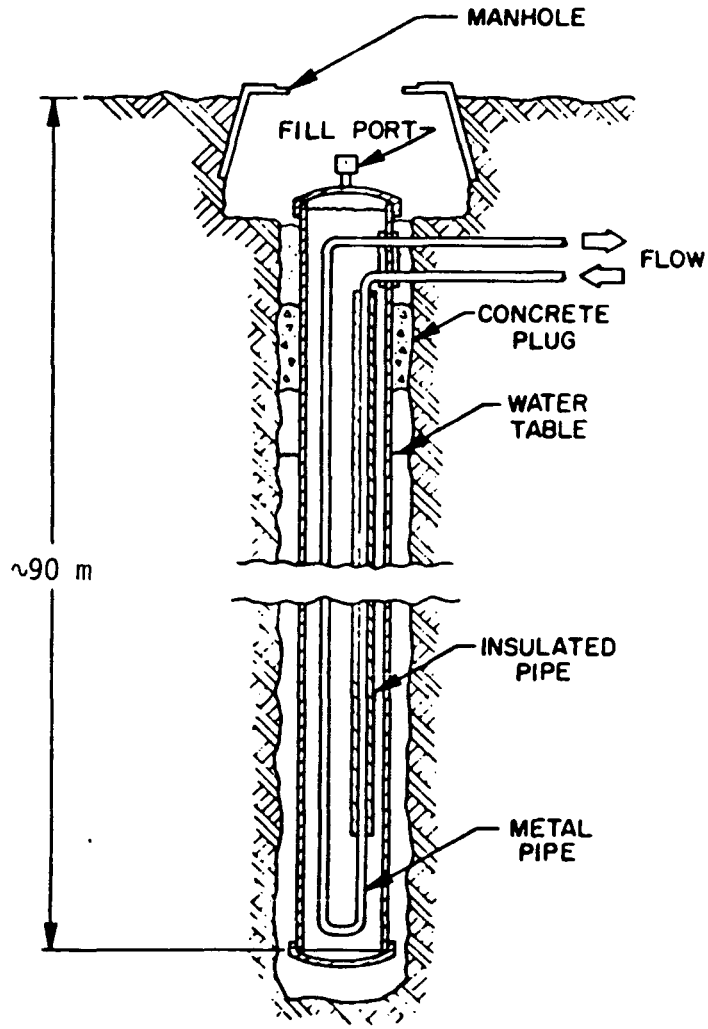

FIGURE 3. GEOSYSTEMS DEEP VERTICAL GROUND COIL[14]

Tube Materials and Brines

Most current installations use flexible polyethylene or polybutylene water-service tubing with an outside diameter between 20 and 50 mm. Water can be used in nearly any kind of tubing, but care must be taken to prevent freezing. Brines, or aqueous solutions of antifreeze, are usually used to minimize problems with freezing and extend the operating range of the heat pump. Of the brines, ethylene or propylene glycol/water is the most favored even though a concentration of over 20 percent is necessary, resulting in a high viscosity and pump power.

The selection of the material of construction and of the brine (or refrigerant) are related. In general, brines have been favored for all systems with greater than 10 kW heat output while direct expansion (particularly in vertical tubes) is favored for very small systems. Various common combinations of tube materials and circulating mediums are shown in Table 1. The properties of most brines relevant to use in heat pump systems are published by ASHRAE[19].

TABLE 1. TUBE MATERIALS AND CIRCULATING MEDIA

Tube Material	Circulating Medium
Polyethylene, PVC	Ethylene Glycol/H_2O Propylene Glycol/H_2O 25-33% concentration
Polyethylene, Nylon, PVC, Copper	$CaCl_2/H_2O$
Steel	NH_3/H_2O, 7% concentration
Steel, Copper, Nylon	Freons (direct expansion)
Steel	NH_3 (direct expansion)
Polyethylene	Methanol/H_2O

Pipe Laying Techniques

There are a number of techniques available for laying both the horizontal and vertical coils, which involve varying degrees of sophistication. In all cases, the larger the ground-coil installation, the cheaper the specific cost of installation by each method, and also more sophisticated methods can be applied to further reduce the cost.

For horizontal coils, there are four basic installation techniques which are used as shown in Figure 4. All involve marking out the site, excavation with removal of soil, optional laying of a sand bed*, pipe laying, backfill, and compression of the site to original form. Specific methodology and application factors for each method are:

Method A. This method involves excavation by a bulldozer or excavation of the whole site to a depth slightly greater than the coil depth, leveling, laying of a sand bed, laying of the pipe by hand, backfilling, and compression. Two difficulties with this technique are excavation may not be possible if the site is small or restricted, and some of the backfilling must be done manually to avoid mechanical damage to the pipe by the machinery. This technique is most appropriate for extremely sandy or rock soil or where the site would have to be excavated anyway, such as for schoolgrounds, parks, or parking lots. This is the most expensive technique.

Method B. The second method involves excavation of a trench about 0.3 m wide with a backhoe, laying of a sand bed, laying of the pipe by hand, backfilling, and compression. This technique is appropriate to medium and larger sites and can cope with stony

---

* Whether or not sand is used depends on the particular installer. Often in modern installations, sand is omitted, and the excavation is backfilled with indigenous dirt. Early experiments[4] showed thermal conductivity with sand to be superior to that with clay during heating (heat extraction) and about equivalent thermal conductivity for the two soils during cooling (heat rejection).

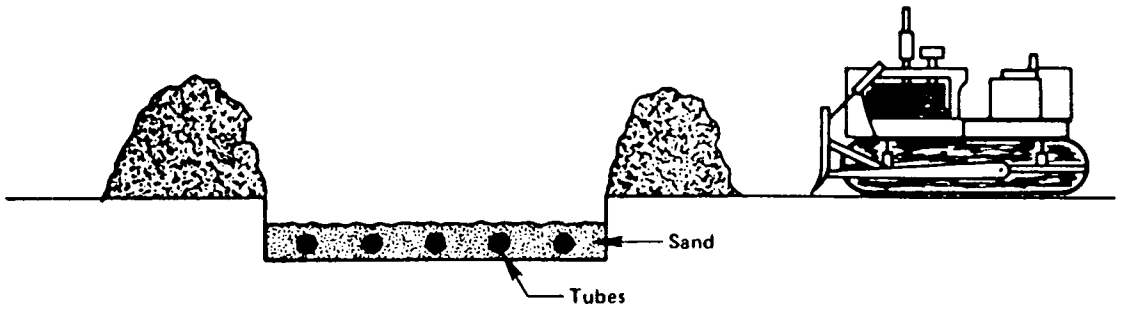

Method A. Excavation of Whole Site With Bulldozer

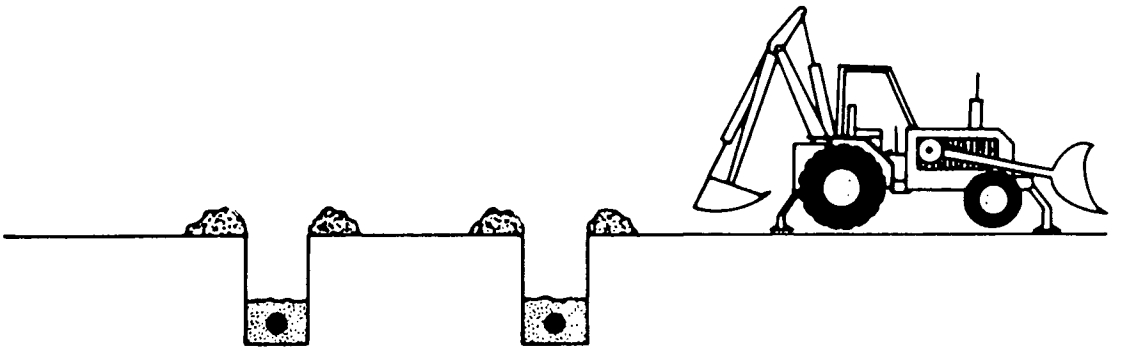

Method B. Excavation With Backhoe

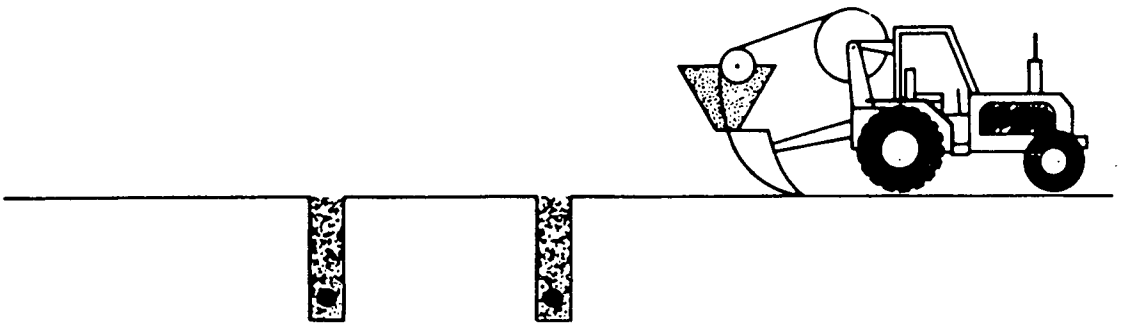

Method C. Excavation With Vibratory Plow

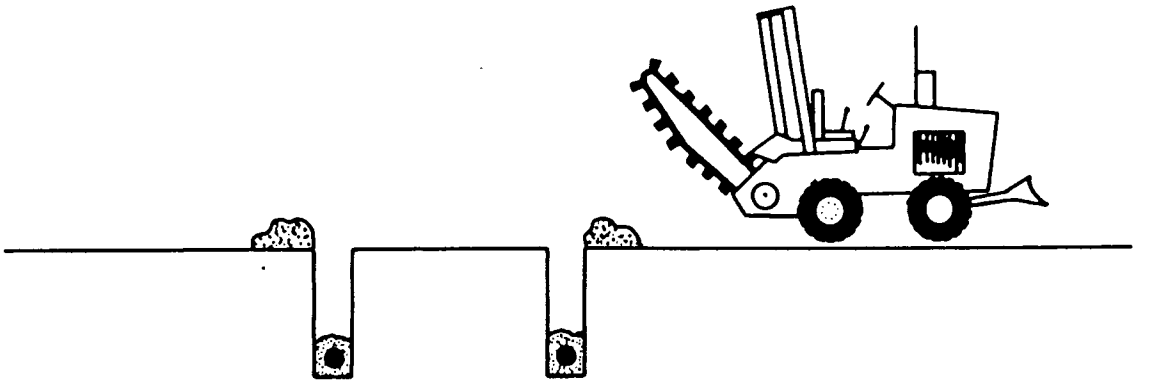

Method D. Excavate With Chain Excavator

FIGURE 4. FOUR BASIC INSTALLATION TECHNIQUES

soils and sites which are relatively restricted, i.e., where space is not available for stocking the soil. A variant of this method is to lay the first pipe in the trench at the full depth which is then backfilled and compacted to the depth of the return pipe; the excavator/pipe layer then returns in the opposite direction to lay this pipe, backfill, and compact. By this technique, a double pipe array can be laid without the machine having to maneuver at the end of each pipe run.

Method C. The third method involves excavation, laying the pipe, and backfilling in one operation with a vibratory plow, such as that used for laying buried electrical or telephone cables. This technique is the lowest in cost but is restricted to large installations with a coil depth of no more than 1.0 m and cannot be used for soils with a high rock content.

Method D. The fourth method utilizes a special purpose chain excavator to excavate a trench about 0.15 m wide to a depth of up to 1.8 m. Other installation aspects are the same as for Method B. This technique is appropriate to smallest sites and can cope with stony but not rocky soil.

For vertical coils, there are the following techniques:

(1) Drilling and insertion of pipe (or tubes with a removable inserter). This is particularly appropriate for deep coils (>10 m), for large sites, and can be used with all soil types.

(2) Water jet boring with insertion of the pipe (or tubing) in the hole. This is appropriate for shallow coils (<10 m) in clay or sandy soils.

(3) Boring by hydraulic ram using a steel tube holding the pipe or tube to be laid. The steel tube is withdrawn leaving the pipe in place. This is the most suitable technique for deep coils (>10 m) in clay or sandy soils.

(4) Impact driving of a steel well encasement. The steel tube serves as the outer tube in a coaxial coil configuration.

Any voids between the drilled hole and tubing are filled with properly compacted native soil below the water table and sand above the water table.

USE OF SOLAR COLLECTORS WITH GROUND-COUPLED HEAT PUMPS

The combination of solar collectors with ground-coupled heat pumps is a relatively recent development. Most of the experimental work in this area has been done during the period 1973 to present with no references to this type of combination of hybrid system in the earlier work (1946-1953). Penrod proposed such a hybrid system in 1964[20] and prepared a design procedure in 1969[21]. There are basically two reasons for combining solar collectors with ground-coupled heat pumps:

(1) The ground can act as a convenient and low-cost heat storage device for solar energy

(2) By using the ground as a heat sink together with a heat pump to upgrade ground temperatures to those high enough for space heating, the solar collectors can be operated at lower temperatures and thus higher efficiencies than if the solar collectors had to be used directly for space heating or water heating.

Relative to item (1) above, it would be hoped that the ground could act as a seasonal storage device for solar energy. This would allow ample storage of solar energy during the summer for use in heating during the winter. The Europeans in effect accomplish this by using solar energy during the summer to restore the ground around vertical ground coils to its original temperature at the beginning of the next heating season. The European climate requires such regeneration practices because there is no need for air conditioning during the summer and thus no opportunity to use the heat pump to regenerate the soil. Horizontal systems will regenerate naturally during the summer without active collectors.

The work of Bose at Oklahoma State University[17] has shown that solar energy stored during the summer at above-normal ground temperatures cannot be effectively carried through the next heating season. The Oklahoma State work has shown that solar collectors effectively allow about a 1-month displacement of ground temperature reduction during the heating season, thus indicating that solar energy might effectively be stored for about one month.

In 1954, Ingersoll concluded that heat storage in the ground around a single coil of more than a few hours for off-peak retrieval would likely prove a failure due to rapid heat dissipation[22].

A popular system being used in Europe today involves the combination of the "Energy Roof" with ground pipes. The "Energy Roof" involves the use of very low cost solar collectors which consist of plate fin tubes (resembling heat exchangers used in wall convectors of hydronic heat exchangers) installed on the roof of the dwelling and plumbed to the ground coil circuit. These collectors receive both radiative heat gain and heat gain due to convection from ambient air. A thermostatic control system allows heat to flow to the ground when collector temperature is above ground temperature.

The attractiveness of using solar energy with ground-coupled heat pumps is uncertain. Oklahoma State concluded that as the performance (seasonal performance factor) of the heat pump increased, solar collectors became less attractive[17]. Andrews[23] concluded, based on work sponsored through Brookhaven National Laboratory, that low cost/low performance collectors had little beneficial impact on ground-coupled heat pump performance, and high cost/high performance collectors were always more effective when used as direct heating systems instead of in series with a ground-coupled heat pump.

OPERATING EXPERIENCE

The operating experiences with ground-source heat pumps can be divided into those directly relating to performance (such as annual performance relative to different layouts and earth types) and those experiences relating to reliability and environment. Horizontal and vertical systems must also be considered separately because common conclusions cannot always be drawn. Table 2 summarizes data from various installations which have been collected from the literature and from discussion with system installers and researchers.

Horizontal Coils

In general, well designed systems have a heating seasonal performance factor (SPF) approaching 3.0 with most systems having an SPF between 2.3 and 2.7 (an exact comparison is not possible because the brine pump power is not always included). The value of this factor is dependent on performance of the heat pump at ground-coupled source temperatures as well as performance of the ground-coupling coil. Since most U.S. water-source heat pumps are optimized for use at well-water-source temperatures above 50 F, typical SPF values for present systems in the U.S. probably would be lower. The major factors affecting performance of the ground-coupling coil are the soil type and moisture content, pipe pitch and depth, and maximum rate of heat extraction. Of the soil types, clay and sand are favorable, preferably (though not necessarily) wet; least favorable is gravelly soil--a high stone content also involves high installation costs. In general, when the soil is wet or has a high ground-water level, the type of soil is unimportant. In unsaturated soil above the water table, migration of moisture away from the pipe during summer operation can substantially reduce heat rejection performance. The optimal single-layer pipe layout is between 0.8 and 1.0 m depth, with the pipe pitch about double the depth (i.e., 1.5 to 2 m spacing). Beyond 1.5 m depth, regeneration is slow, while about 0.8 m depth, the coil can be within the region affected by surface cooling and freezing in water. For some northern locations with cold climates, a pipe spacing of less than 1.5 m results in a solid ice lens between the coils and reduced rate of

TABLE 2. TYPICAL OVERALL SEASONAL PERFORMANCE FACTORS (SPF) FOR GROUND-COUPLED HEAT PUMPS

Installation	Ground Coil	Seasonal Performance Factor (Heating, except as noted)
BMFT Project Oggenhausen Germany, 1976	Single layer horizontal, 1.5 m deep, 2200 m long, polyethylene	2.0
Cube Germany, 1955	Single layer horizontal, 0.5 to 2.0 m deep, 170 m long, steel	3.1
Schleswag Rendslewg Germany	Single layer horizontal, 1.5 m deep, 1100 m long	2.7
Agathermia Sweden	Single layer horizontal, 0.95 m deep, polyethylene	2.6
Queens University United Kingdom	Single layer horizontal, 1.2 m deep, steel	2.4
Chalmers University "Utby" House Sweden	Vertical hexagon U-tube array, 10.5 m deep, PVC	3.0
Cube Ing. Union Germany	Steel horizontal	3.25
	Steel horizontal	3.12
	Steel horizontal	3.05
	Steel horizontal	3.2
	Steel horizontal	3.35
	Polyethylene horizontal	3.08
Whitemarsh House Philadelphia, PA 1948-1950	Single layer horizontal steel pipe with glycol solution, 400 m long, 1-1/2 m deep	2.4
Lansdowne House Philadelphia, PA 1948-1950	Single layer horizontal steel pipe with glycol solution, 400 m long, 1-1/2 m deep	2.6
E Tech Atlanta, GA 1979	Single layer horizontal polyethylene coaxial tubular coil	Winter 2.0 Summer 1.8
Geosystems Stillwater, OK	Double layer horizontal polyethylene, 2 m and 1.1 m deep	Winter 2.8 Summer 2.7
Cantherm Montreal, Canada	Single layer horizontal polyethylene <1 m deep	2.5 (Guaranteed) 3.0 (Expected)

regeneration in the spring. The maximum rate of heat extraction has been between about 10 W/m pipe length (about 40 W/m^2 surface area) and 75 W/m (225 W/m^2). The performance is, over a wide band of heat extraction rates, fairly insensitive to this parameter and the optimum seems to lie at a maximum value of 30 W/m, with an annual average of about 17 W/m. This is achieved when a 10-kW heat pump is used in combination with about 200 m^2 coil surface area, the coil being placed at 0.8 to 1.0 m deep and with 1.5 m spacing.

A secondary parameter is the pump power required for the brine circuit; the best systems require about 5 to 10 percent total energy input for the pump. Experience has shown that a pipe diameter of 30 to 40 mm should be used with maximum pipe lengths between 100 and 200 m. The flow should be just in the turbulent region and care should be taken to ensure equal distribution of the flow between parallel coil circuits. The brine concentration should be as diluted as possible, say with a freezing point between -10 C and -15 C, to minimize pumping losses. Finally, the correct pump type and sizing is critical since over-dimensioned or low-efficiency pumps have often been the cause of excessive pump power.

In general, poor performance has usually resulted from bad, over-optimistic or under-dimensioning of the ground coil or heat pump. This has often been a result of attempts to minimize investment costs, since experience has shown that the initial performance factor is not too sensitive to dimensioning. However, heating capacity after several heating seasons may fall off in a system operating with a high heat extraction rate per unit length of pipe due to changes in the soil adjacent to the pipe.

The major sources of unreliability have been leakages of coolant, entrainment of air in glycol systems, the controls, and the heat pump itself. The leakage of coolant can be avoided by not using screwed or other mechanical underground connections, and preferably by the avoidance of all underground connections. Air entrainment can be eliminated by laying the ground coil without sharp bends, bedding the coil in sand to avoid constrictions, bleeding the coil during the run-in period, and having a high enough flow rate (greater than 0.35 m/s or 1000 m^3/h in a 30 mm diameter tube).

The major factors affecting the environment are the production of permafrost, disturbance of flora and fauna, disturbance of the ground surface,

and pollution by leakage of coolant. The latter has already been dealt with. Disturbance of the ground surface can be minimized by placing the coils deep enough. Permafrost can be avoided by not exceeding the optimum heat extraction rate. Von Cube's own house installation, though well designed and near optimum for performance and cost, has produced light furrowing of the lawn above it. The coil in this case is placed 0.5 to 1 m deep. Further, the melting of snow and surface ice takes place up to two weeks later than elsewhere, retarding spring slightly in that part of the garden. Placing the coil deeper would have increased cost and reduced performance (though slightly), so that it has to be assumed that some surface disturbance is likely (at least in areas with vegetation). If the coil spacing and depth is close to optimum, then permafrost will not occur, nor will the production of unfrozen areas surrounded by frozen areas occur. These warm traps could result, it has been suggested, in the destruction of the local microculture which could not then migrate away from the advancing frost front. The greatest risk of this occurring is when the coils are placed deep, i.e., greater than 1.5 m.

Vertical Coils

The experience on vertical coil systems is much less than for horizontal systems. The only known well-instrumented installations are in Sweden and these have only been operational for a few years. The experience of the Chalmer's installation at Utby is that the vertical ground-coil system in a clay soil has a SPF similar to optimal horizontal systems, but requires less than half the surface area. Heat extraction rates lie in the region of 20 W/m maximum (48 to 227 W/m^2 surface area depending on tube depth). The critical factors affecting performance are, as in horizontal ground coils, soil properties and moisture content, coil layout, and heat extraction rates. The regeneration technique is also a significant factor. For example, at Utby the change from a fancoil unit to a solar/wind collector produced a significant improvement in the SPF as a result of the elimination of the fan power. Another factor influencing performance is the temperature to which the ground store can be heated in summer. This

directly affects the evaporating temperature during heating. Thus, larger heat loads can be better matched to this type of unit, as deeper coils with a smaller store diameter give a lower heat loss and consequently a higher mean storage temperature. The optimum annual average store temperature, to maximize the regenerator performance in summer and to minimize the heat loss in winter, would appear to be about 15 C. As with the horizontal systems, reliability, in the context of the ground coil itself, is mainly a result of leaks and air entrainment. Correct design of the coils (to provide natural venting of air from the coils), careful installation, and joint integrity are necessary to avoid leaks and air entrainment.

Environmental problems are also possible with vertical systems. Alternate freezing and heating of the ground around the coil could result in drying and shrinking of the soil with detrimental effects on the local environment, ecology, and also performance by increased thermal resistance. Shrinkage can also result in local collapse, viz. Utby in the first year; though this can be avoided by designing the coil to minimize ice production. The heat pump controls should opt for solar (or air) sources when the brine temperature from the regeneration system is high enough and there is a demand for heating.

The "Sun-Clay" project by the Chalmers Techniska Hogskola team in Goteborg is a good example of the use of the best experience in vertical coil systems. This hybrid heating system for a 15,000 m^2 school building utilizes an 800 kW diesel-driven heat pump with heating source provided by a vertical ground-coil "store" and a 600 m^2 array of unglazed solar-collector roof panels. The ground-coil "store" consists of a matrix of 30 m long U-tubes placed 36 m deep in clay with 16-mm-diameter polyethylene supply and return tubes spaced 20 cm apart and placed with 2 m between adjacent U-tubes. The collector pipes are placed 0.6 m deep and the entire 2200 m^2 surface area of the store in insulated with 30 cm of foamed concrete. The solar panels are made from black corrugated aluminum with attached copper tubing. The ratio of coil length to collector area was approximately 24 m/m^2.

Effects of Cycling on Soil Heat Transfer

There is some speculation that heat-pump cycling can have a pronounced effect on soil heat transfer and thus on system performance. Only

the more sophisticated transient models account for cycling effects on performance. Table 3 presents some experimental data on how soil thermal conductivity is affected by heat-pump cycling during heating operation.[4] As can be seen, the effect is to alter the thermal conductivity by a factor of about 2. During a 650-hr cooling cycling run with 6 hrs "on" and 6 hrs "off" at a coil temperature of 43.3 C, the equivalent thermal conductivity was 1.99 W/(m K) with sand backfill and 2.09 with clay backfill.

These results also show some sensitivity to type of backfill. In general, the effective thermal conductivity was higher with sand backfill for heating operation and higher with clay backfill for cooling operation.

TABLE 3. EFFECTS OF HEATING OPERATION ON OVERALL HEAT CONDUCTIVITY K

AEIC-EEI Program[4] (Kansas State College)[a] --

Soil Type[b]	Coil Temp. °C	Operating Cycle[c]	K[d] W/(m K)
Sand	-1.1	6 hrs. on/6 hrs. off	2.92
		Continuous	1.63
Clay	-1.1	6 hrs. on/6 hrs. off	2.16
		Continuous	1.11
Sand	-6.7	6 hrs. on/6 hrs. off	2.15
		4 hrs. on/4 hrs. off	2.60
		Continuous	1.59
Clay	-6.7	6 hrs. on/6 hrs. off	2.08
		4 hrs. on/4 hrs. off	1.89
		Continuous	1.66
Sand	-12.2	6 hrs. on/6 hrs. off	2.46
		Continuous	1.75
Clay	-12.2	6 hrs. on/6 hrs. off	2.51
		Continuous	1.77

(a) Four copper coils each 16.4 m long. Coils are coaxial (1/2-in. tube inside 1-1/8-in. tube) buried 1.97 m deep with either clay or sand backfill extending 0.33 m in all directions. Direct expansion of refrigerant flowing out through inside coil and back through annulus. Two coils buried in sand and two in clay.

(b) Temperatures of sand were drawn down more during "on" cycle than for clay but recovered more during "off" cycle. This showed special advantage of sand in cyclic operation.

(c) Test sequence consisted of 1634 hours of cycling operation followed by continuous operation.

(d) Average K for "on" part of cycle.

DESIGN METHODOLOGIES

Numerous earth-coil systems have been installed in various locations of the U.S. and Europe with design configurations based on experience derived from experimental prototype installations. Other systems have been designed with more sophisticated approaches using one of about 30 steady-state and transient models uncovered in this program.

Figures 5 and 6 represent design methodologies utilized in the U.S./Canada and in Europe, respectively, in categories of increasing complexity from left to right in the diagrams. Modeling categories include rules of thumb, steady-state and transient analytical, lumped parameter, finite difference in one, two, and three dimensions, and finite element in two dimensions. A discussion of different approaches within each of these categories follows.

Experience/Rules of Thumb

Rules of thumb have served well for specific localities where soil and weather conditions are fairly uniform since design specifications are based on experience with related installations. However, particularly in Europe, performance of some systems has suffered due to inability of the rule-of-thumb designer to properly assess the effect of design compromises -- such as shallower burial depth, lower pitch between tubes, and higher heat-extraction rates due to shorter tubing length -- used in response to market pressure to minimize initial costs and reduce land-area requirements. Design specifications cannot be extrapolated outside the available experience with respect to soil and weather conditions, unless the purchaser is willing to assume risks associated with an experimental prototype installation. Design optimization can only be conducted slowly over a period of years with this approach based on changes to experimental systems. Even then, weather vagaries can easily mask real differences due to design changes.

Rules of thumb uncovered in this program are given in Table 4.

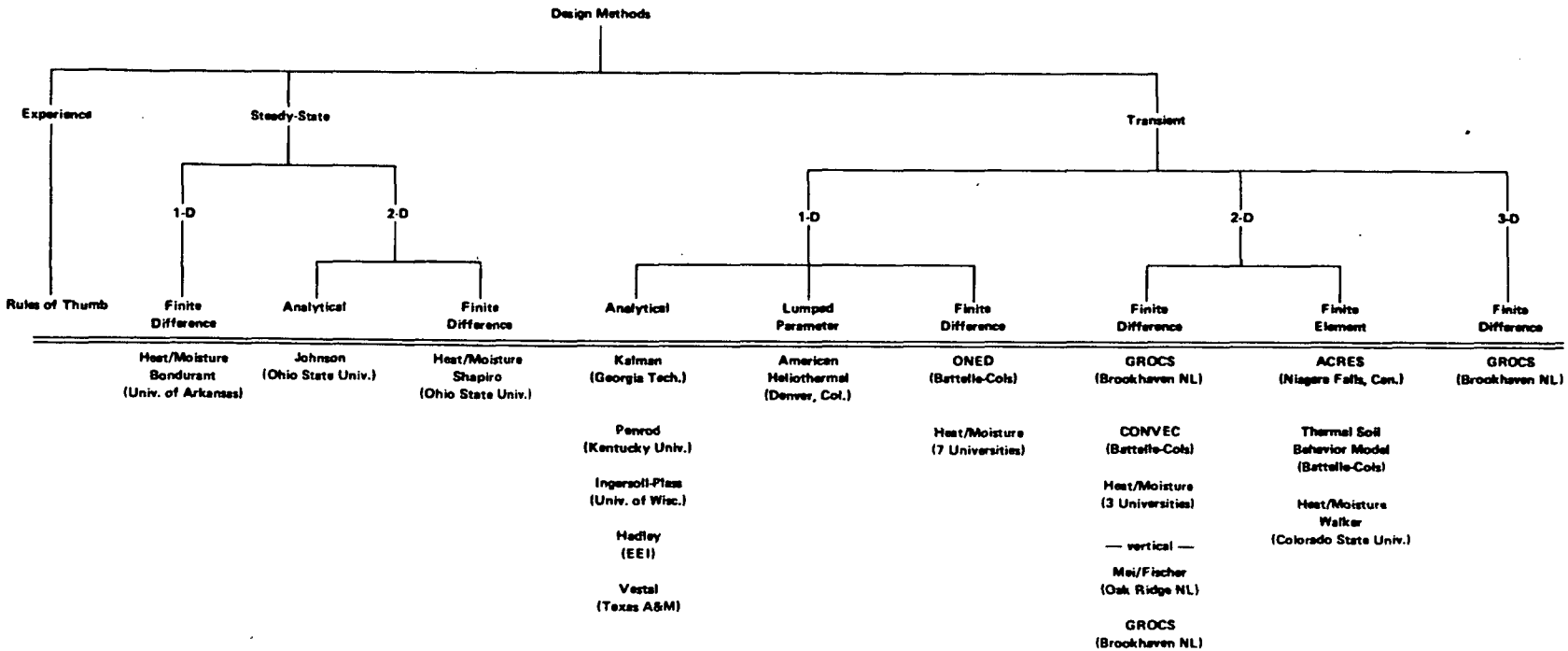

FIGURE 5. U.S./CANADA DESIGN METHODOLOGIES

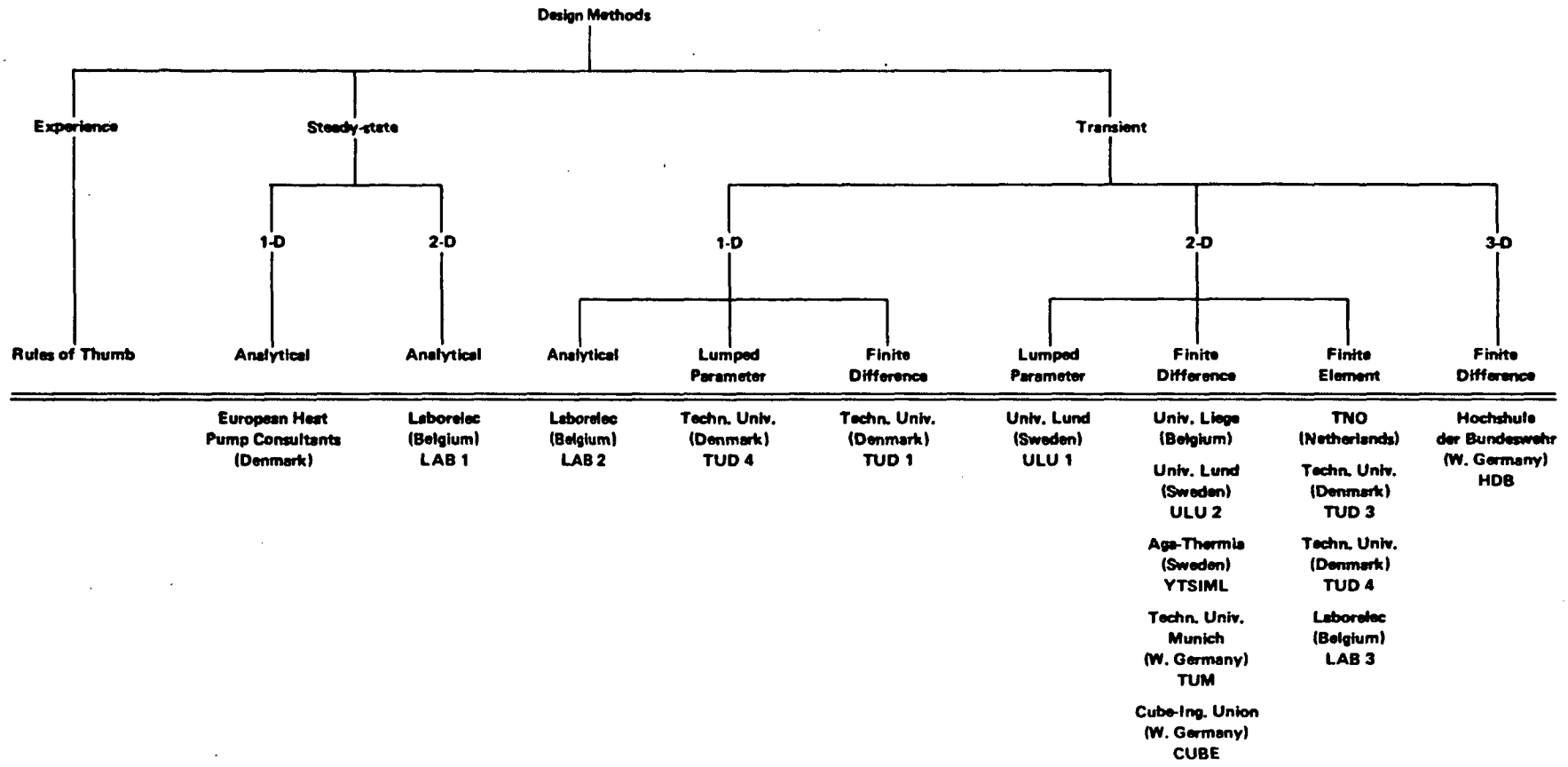

FIGURE 6. EUROPEAN DESIGN METHODOLOGIES

TABLE 4. RULES OF THUMB

- Piping Length, m/ton* of heating or cooling
  - 66 to 131[5] (copper/steel piping)
  - 98 to 131[16] (plastic piping)
  - 33 wetted vertical piping[16]
  - 126 European experience (20 w/m average heat-extraction rate per unit length at a COP of 3.0)
- Burial Depth, m
  - 1.3 with cooling
  - .50 to .8 without cooling[24]
- Spacing, m
  - 1.3 to 1.6[24]
- Outside Diameter of Piping
  - Ground heat flow to piping is independent of diameter[25]
  - Size inside diameter to minimize pumping power
- Circulation Rate
  - 2 to 4 gpm/ton (0.13 to 0.25 liters per sec/ton)[17]
  - Reynolds Number high enough to be above laminar flow but low enough to minimize pumping power, i.e., 5,000 to 10,000

* One ton is 12,000 Btu/hr or 3.5 kW.

Steady-State Models

For effective design optimization, a modeling approach is needed in which performance can be predicted in response to changes in soil and weather conditions and values for configuration variables. The steady-state models, indicated on Figures 5 and 6, are the next level of sophistication. In the U.S., three steady-state horizontal-coil models were developed for assessment of soil warming with waste heat. The Bondurant model[26],

developed at the University of Arkansas, computes temperature and moisture content in radial nodes about the pipe. The Johnson model[27], developed at Ohio State University, uses line-source theory with superposition to compute soil temperature for the region between two pipes and the surface. The Shapiro model[28], developed at Ohio State University, computes temperature and moisture content for a rectangular nodal region bounded by vertical planes through left and right pipes. Two types of steady-state models have been developed for solution with a calculator in Europe. A vertical-coil model, EHP*, developed by the European Heat Pump Consultants in Denmark[29], calculates monthly values of brine and ground temperature with a programmable calculator (TI-59 with 6 or 7 magnetic cards) from inputs of monthly solar radiation and heating load, and monthly performance of solar panels and the heat pump. Constants in the heat transfer equations have to be fitted to experimental values or values obtained from a more complex model. Accuracy of this method is unknown and likely to be similar to that for rules of thumb.

A horizontal-coil model, LAB1, developed by Laborelec in Belgium[30,31] is based on a two-dimensional analytical approximation for heat transfer from constant line sources in a semi-infinite solid. Thermal resistances for the soil, tubes, and brine are used in calculation of monthly values of brine temperature in response to monthly heat extraction rates. In comparison with results from a transient model, predicted coil lengths were about 22 percent longer with this model, which was designed for use with a simple pocket calculator.

Transient Models

Transient models provide time-dependent fluid and ground temperatures and other values that are useful for performance evaluation and design optimization. These models fall into three main groups depending on the number of dimensions considered. As shown in Figures 5 and 6, the one-dimensional group can be further subdivided into analytical, lumped parameter, and finite difference models. The two-dimensional group can be divided into

* Model acronyms are designations by developer or Battelle.

lumped parameter, finite difference, and finite element models. The three-dimensional group includes finite difference models only.

Analytical models include those that rely on a single basic conduction equation for transient heat flow. Lumped parameter models are characterized by "lumped" volumes representing various portions of the ground-coil heat-transfer system. Finite difference models are most familiar to thermal engineers because (1) the volume nodes in the model correspond to physical volumes and (2) solution of the governing differential equations for heat flow from node to node involves a simple energy balance for each node. The time step with finite difference models must be small enough to maintain modeling stability in calculation of nodal temperatures at the centroid of each node. Finite element models utilize mathematical relationships that provide computational stability with much larger time steps than used in finite difference models. Stability is more dependent on thermal properties rather than time step; some mathematical adjustment of thermal properties may at times be required to achieve an energy balance in the integral solution at each node. Nodal elements are usually triangular and temperatures are computed at vertices of the triangles.

One-Dimensional Models

One-dimensional models of ground-coil heat transfer provide the next level of sophistication above steady-state models and include analytical models, lumped parameter models, and finite difference models.

Analytical Models. Many of the U.S. design methodologies in the late '40s to early '60s utilized the Kelvin line-source theory applied to ground coupling by Ingersoll[6,22,32]. This theory is the basis for the Kalman, Penrod, and Ingersoll-Plass models in the U.S. and the LAB2 model by Laborelec in Belgium.

The basic integral equation used in this model is Eq. 1.

$$\Delta T = \frac{Q'}{2\pi k} \int_{\beta_1}^{\infty} \frac{e^{-\beta^2}}{\beta} \, d\beta \qquad (1)$$

where

ΔT = difference in temperature of brine and far-field soil at depth of coil

Q' = rate of heat transfer per ft of pipe

k = thermal conductivity

$\beta_1 = r/(2\sqrt{\alpha t})$

r = distance from center of pipe

α = thermal diffusivity of the soil

t = time since start of operations

β = integration variable .

Kalman formalized this analytical approach in a computer program at Georgia Tech[33]. The integral in Eq. 1 is solved from polynomial expressions fitted to tabulated solutions. Results for fluid temperature and ground temperature adjacent to the pipe are computed for each month for a two-year period including both cooling and heating seasons. Results from the second year are used to compute approximate values for life-cycle costs for the ground-coil components. This program was significantly reduced in size by Battelle by computing values during heating or cooling seasons in subroutines.

Kalman improved on the Ingersoll approach by separately accounting for the thermal resistance of the piping wall. Heat pump performance is modeled from least-squares polynomial expressions fitted to suppliers' steady-state performance data for both heating and cooling. Space conditioning loads are modeled with the degree days method. Far-field ground temperatures at the depth of the piping are computed for each month and a constant ground thermal conductivity is used. The program also includes the capability to assess the effect of spacing between piping.

Kalman was unable to obtain experimental data for evaluation of monthly values; however, integrated values of shorter-term tests agreed fairly well with values predicted with a modified program. Laborelec estimated that the piping will be oversized in length by 12 to 22 percent with their LAB2 model, which appears to be based on a similar approach.

Vestal[25] correlated data from numerous heat extraction and rejection experiments run at Texas A&M which included both steady-state and cyclic operation using dimensionless groups shown in Eq. 2.

$$Q/(\Delta T\ k\ L) = f[k\ \theta/(\rho\ C_p\ D^2)] \qquad (2)$$

where

Q = heat transfer rate at time θ

ΔT = temperature difference between fluid and far-field ground at depth averaged over run

k = soil thermal conductivity averaged over run

L = piping length

θ = run time

ρ, C_p = density and specific heat of the soil near the pipe averaged over run

D = inside diameter of copper coil .

From plots of these dimensionless groups, Vestal found that when soil temperatures and heat flow stabilized following the start of fluid circulation, the left group in Eq. 1 became independent of the right group and equal to a value called an intermittency factor I. From this relationship, he derived an expression for the required length of piping shown in Eq. 3.

$$L = Q(\Delta T\ k\ I) \qquad (3)$$

where

I = experimentally determined value for heat rejection or extraction which is a function of the fractional on time.

The error in values for I were estimated to be about 10 percent. A preliminary proposed procedure based on the correlation of experimental data represented by Eq. 3 was prepared[34].

Hadley had previously presented somewhat similar results from a correlation of dimensionless variables of transient data from many diverse experiments at the conclusion of the EEI program[35]. Eq. 4 gives this correlation.

$$\Delta t\ k\ L/q = 0.311\ \log_{10}[\rho\ C_p\ D^2/(\theta' k)] - 0.3696 \qquad (4)$$

where variables are defined as above for Eq. 2 except

Δt = temperature difference between the far-field ground and the coil at time θ'

q = a 4-week average heat transfer rate at the peak of the heating season

θ' = time from the beginning of the heating season to the peak 4-week period.

Hadley compared predictions of piping length from Eq. 4 with values predicted by the Kelvin line-source theory using laboratory-measured conductivity values and concluded that the latter method was over-conservative (in keeping with Laborelec's estimate of accuracy noted previously).

Lumped-Parameter Models. The American Heliothermal Corporation in Denver, Colorado, prepared a lumped-parameter computer model of ground-coil heat transfer as part of a program to explore solar-assisted heat pump operation[36] and concluded that ground coupling may be an attractive alternative. In this program, fluid in the piping and piping material are modeled as single, though separate, isothermal masses. The soil is modeled as a series of six volumes concentric about a single pipe with radial width equal to one-sixth of the depth from the surface to the pipe wall. Figure 7 shows the nodal geometry of this model. These annuli of soil are assumed to be surrounded by soil at the far-field ground temperature at the piping depth. The model assumes constant soil properties.

The program was written in BASIC and includes a heat-pump model based on least-square polynomial fit of steady-state performance data. The ground-coil heat-transfer portion of the program was rewritten by Battelle in FORTRAN in the form compatible with the TRNSYS system simulation program[37]. A stand-alone driver program was prepared by Battelle so that the model could be used independently from TRNSYS with scheduled heat extraction or rejection. It is set up for typical day-of-the-month operation with hourly time steps. No experimental verification of this model is available.

An alternative one-dimensional method is to use an approach in which the ground coil is simulated by a thin isothermal slab connected by thermal resistances to surrounding isothermal slabs of ground. The TUD4 model based on this approach is under development by the Technical University of Denmark at Lynby[38]. They hope the model can be used to simulate short-term response characteristics of the ground-coil system with a sophisticated heat-pump model. The developers expect to verify this model by comparison with results from more sophisticated models (TUD2 and TUD3) described in later sections of this report.

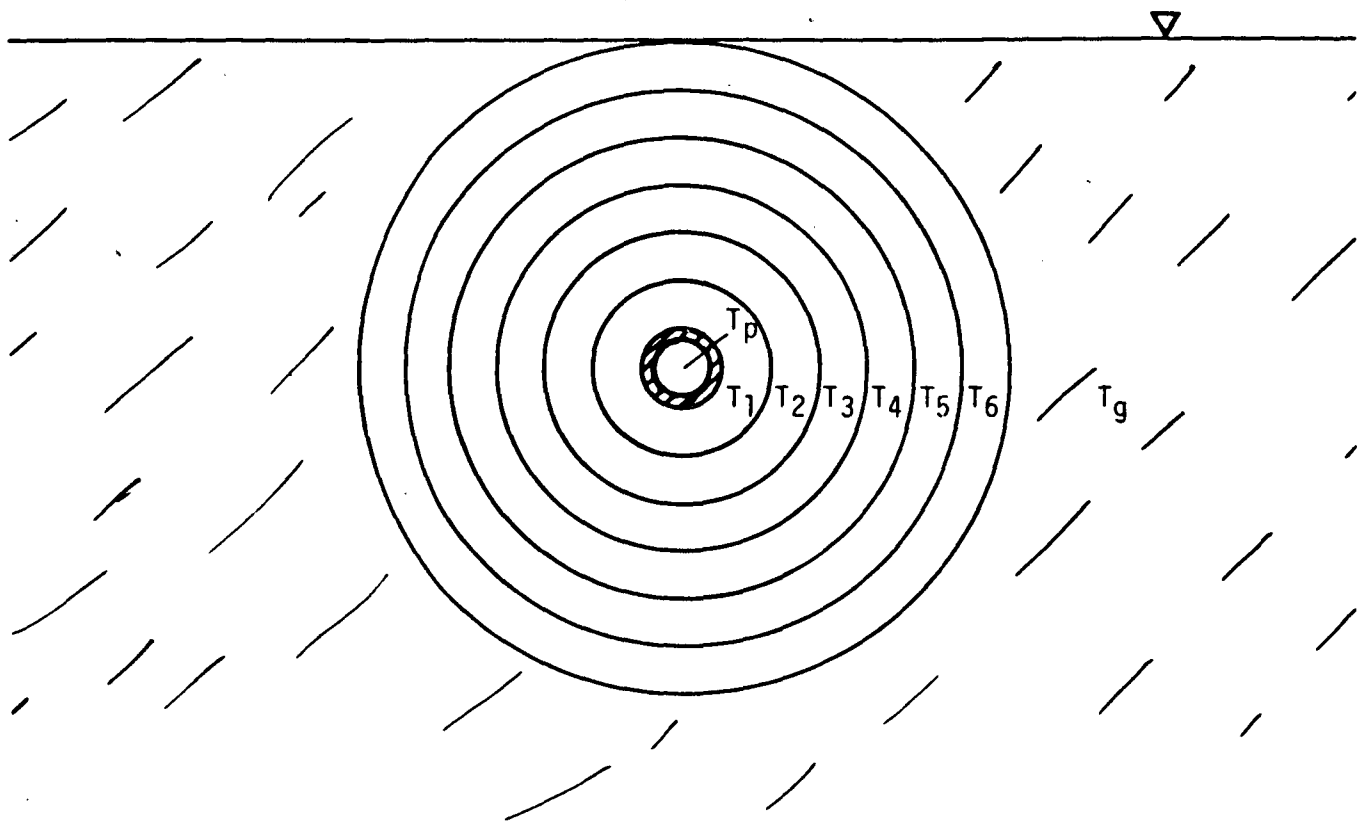

FIGURE 7. NODAL GEOMETRY FOR AMERICAN HELIOTHERMAL LUMPED-PARAMETER MODEL

Finite-Difference Models. Battelle has used a one-dimensional finite-difference model ONED to compute far-field ground temperatures in the arctic environment[39]. The analysis predicts soil temperatures with freezing in response to terrain factors, snow cover, evapotranspiration at the surface, and meteorological data. Time dependent change in depth of the freeze/thaw line correlated fairly well with experimental data in several locations.

Finite-difference heat and moisture flow models for other areas of applications have been developed at one Canadian and six U.S. universities. The Sophocleous[40], Jury[41], Hauk[42], Cassel[43], Dempsey[44], and Gee[45] models predict soil temperatures and moisture content for nodes in the depth coordinate. The Sophocleous model, developed at the University of Alberta, can accommodate layered unsaturated and saturated soil. The Dempsey model, developed at the University of Illinois, accommodates layered, unfrozen and frozen soil for calculation of freeze/thaw cycles and has a superior modeling approach for the effect of weather data on temperature and moisture flow at the ground surface.

The Hartley model[46], developed at Georgia Tech, computes temperature and moisture content for radial nodes about a buried electrical power cable. The program is not available in the thesis but is soundly developed and appears to be capable of predicting the onset of a "runaway" condition for formation of a dry core about the cable. Surface effects can only be crudely approximated in this model.

Schlosser at the Technical University of Denmark developed the TUD1 model[47] in which horizontal coils were simulated by a thin plate source with uniform heat generation. This model can be used to test short duration effects such as daily variation in brine temperature from variable boundary conditions at the surface.

Two-Dimensional Models

Two-dimensional models provide the next level of sophistication in that heat flows in both the vertical and horizontal planes in the soil due to surface and piping effects can be modeled. Some of these models are very detailed and require extensive computing time. Yet with these complex models, the output results are only as good as the model structure. For example, the nodal geometry in many models is set up for modeling transient

heat flow within a slab of earth bounded on either side by adiabatic surfaces through the center of a coil and through the midpoint between adjacent coils, at the top by the ground surface, and at the bottom by a constant temperature or constant geothermal heat flux. Other models are structured for a single isolated pipe. Ground surface temperature is specified as a mean annual value, single annual sinusoidal relation, or a value computed from local terrain and weather parameters. Some models explicitly solve for local conditions in the vicinity of the pipe while others use a steady-state analytical solution for heat transfer from the pipe to the nearest nodal boundaries. Some models allow the user to set up the internal nodal geometry while the nodal geometry is internally generated in other models. Only a few models account for freezing, and none of the heat-pump earth-coil models account for moisture diffusion due to thermal effects. Simulation of building loads and heat pump performance is very elementary in most models.

Descriptive comments on some of the more significant models listed in Figures 5 and 6 are provided below. This group includes lumped-parameter models, finite-difference models, and finite-element models. Not all of these models are publicly available. Some have never been fully documented because student developers at universities graduated or funding was lost.

Lumped-Parameter Model. The University of Lund in Sweden is developing the ULU1 model which characterizes the ground coil by a heat transfer length and the soil as a cylindrical isothermal volume[48]. Temperatures of the brine and soil are functions of time only. This model has been used to study the influence of many parameters, such as various scenarios for heat rejection or extraction. Local effects in the vicinity of the pipe are not modeled.

Finite-Difference Models. The Brookhaven National Laboratory has developed the GROCS model[49] as a user-oriented, self-contained ground-coupling subprogram for use with TRNSYS to model either a horizontal serpentine coil or a buried tank. To minimize computation time, the model uses constant soil properties and a comparatively small number of large nodal volumes. The nodal structure is set up with a network of "free" nodes in

the vicinity of the plane of the coil. Temperatures at the centroid of each of these "free" nodes are computed at each time step from an energy balance by matrix solution of simultaneous equations. The nodal network includes "rigged" nodal volumes bounding the "free" nodes. Temperature of each of the "rigged" nodes is computed by interpolation of input values for each month as a function of depth.

Localized effects near the piping, such as freezing and moisture migration, are not modeled. Rather, a thermal resistance for heat flow from the horizontal piping to the centroid of adjacent "free" nodes above and below the plane of the coil is computed using a steady-state conduction relationship which provides a means for evaluation of spacing between pipes. The effect of piping length can be evaluated by varying the length or diameter of the free nodes adjacent to the piping plane. The depth of burial can be evaluated by altering the depth of the horizontal plane of the piping. This requires adjustment in depths of adjacent nodes as well.

The program computes outlet brine temperature and soil temperature for each node in time steps of one hour or less in response to time dependent mass flow and inlet brine temperature. Values of soil temperature for rigged blocks are updated at each time step. Multiple layers of piping or reversed-flow operation can be accommodated when coupled to TRNSYS by specification of additional components which access the same nodal values. A heat-pump simulation capability is available as a standard TRNSYS subroutine which utilizes steady-state performance data.

Battelle has prepared a driver program for GROCS to replace TRNSYS which provides time dependent heat rejection or extraction from the piping. At each time step, the brine temperature to the field is computed by iteration from the known heat flow, fixed circulation rate, and computed brine temperature from the field. All inlet data arrays required in the original version are internally computed from a few simple inputs to facilitate optimization. Effects such as piping length, burial depth or spacing can now be evaluated by a change in value of that one parameter. Ground temperature tables in this modified version of GROCS are computed using the Kasuda relationship[50]. Concentric nodal geometry is used in this revised version as recommended by Andrews. The plane of the horizontal piping is represented by an equivalent circular plane as shown in Figure 8.

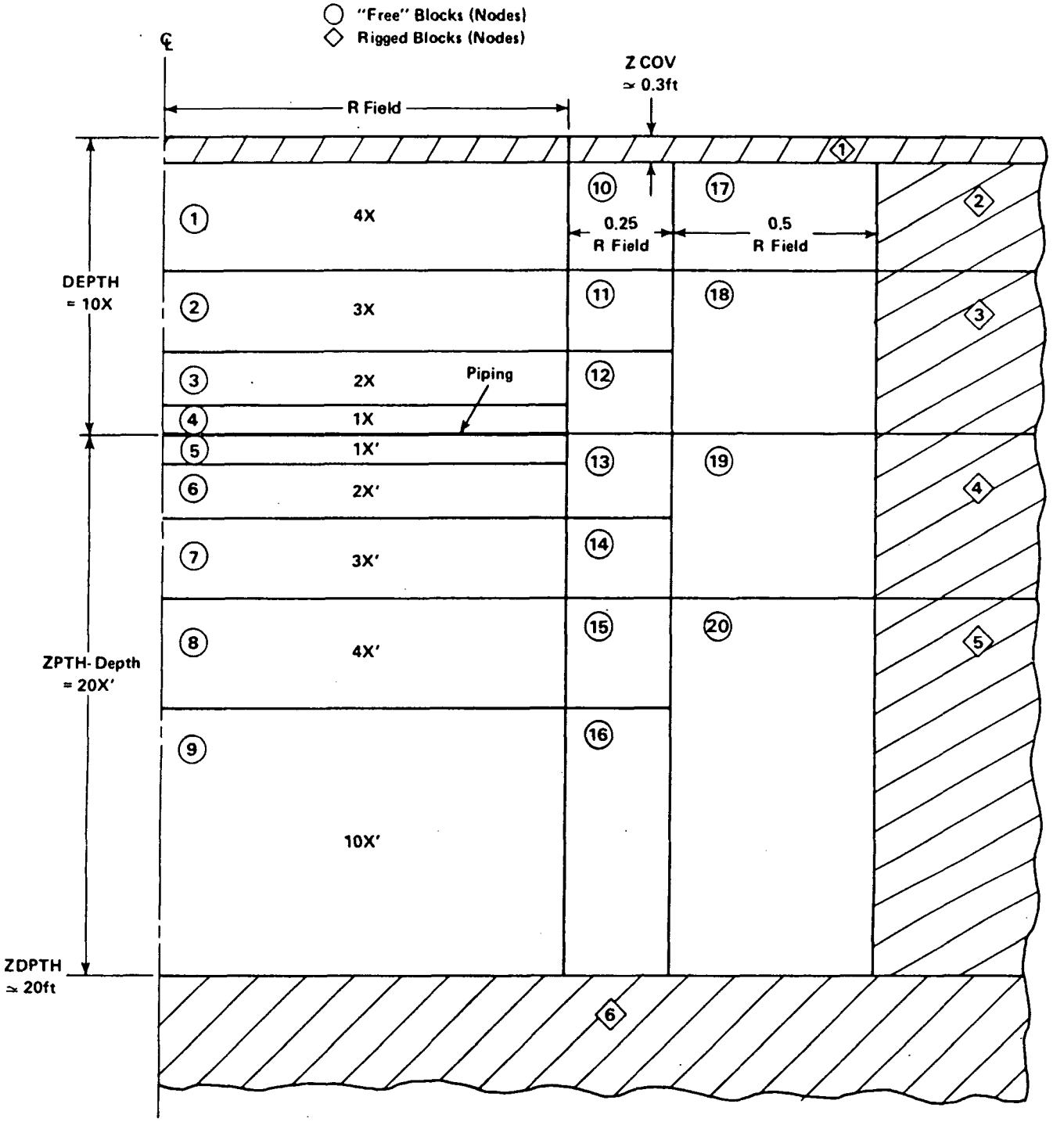

FIGURE 8. NODAL GEOMETRY FOR THE GROCS SERPENTINE COIL

Comparison of averaged long-term brine temperatures, conducted by the developers[51] and by Oklahoma State University[17], has shown fairly good agreement with computed values.

Another component subprogram in the GROCS program is available for simulation of heat flow from a buried tank. By elongating the tank, heat flow from a vertical liquid-filled coil can be simulated. The liquid in the tank model is assumed to be isothermal.

Battelle-Columbus has developed the CONVEC program for modeling earth-coupling heat transfer adjacent to a gas pipeline buried in Arctic soil with underground water movement[52]. A forward explicit approach is used in solving the governing differential equations. This model utilizes a unique approach for maximizing the time step as the calculation proceeds while maintaining computational stability. Moisture movement due to hydraulic (but not thermal) effects is modeled but can be suppressed if required. Thermal properties of the earth are computed as a function of composition, moisture content, and temperature. The model has a one-dimensional finite-difference approach for computing ground surface temperature and far-field ground temperatures as a function of terrain factors, snow cover, and meteorological data. Figure 9 shows the nodal geometry used in the present model, which is probably too complex for heat-pump earth-coil studies but could be simplified with changes to input data. As is, the model would provide extensive detail about an isolated pipe and would be especially suitable for study of heating operation with freezing.

The CONVEC model has been used to evaluate the effect of sub-surface water movement on the growth of the freeze zone about a chilled pipeline under various scenarios of water flow, burial depth, and permafrost conditions. In a current program, the CONVEC model is being used to evaluate frost-heave phenomena. Analysis for moisture migration due to thermal effects in Arctic soil is being developed.

Three two-dimensional finite-difference models of heat and moisture transfer in soils have been developed at U.S universities for agricultural application. All of these models compute temperatures and moisture content for a rectangular nodal region bounded by vertical planes on the left through the pipe and on the right midway between pipes. Sources and sinks of heat and moisture at piping nodes are modeled by specifying temperature and

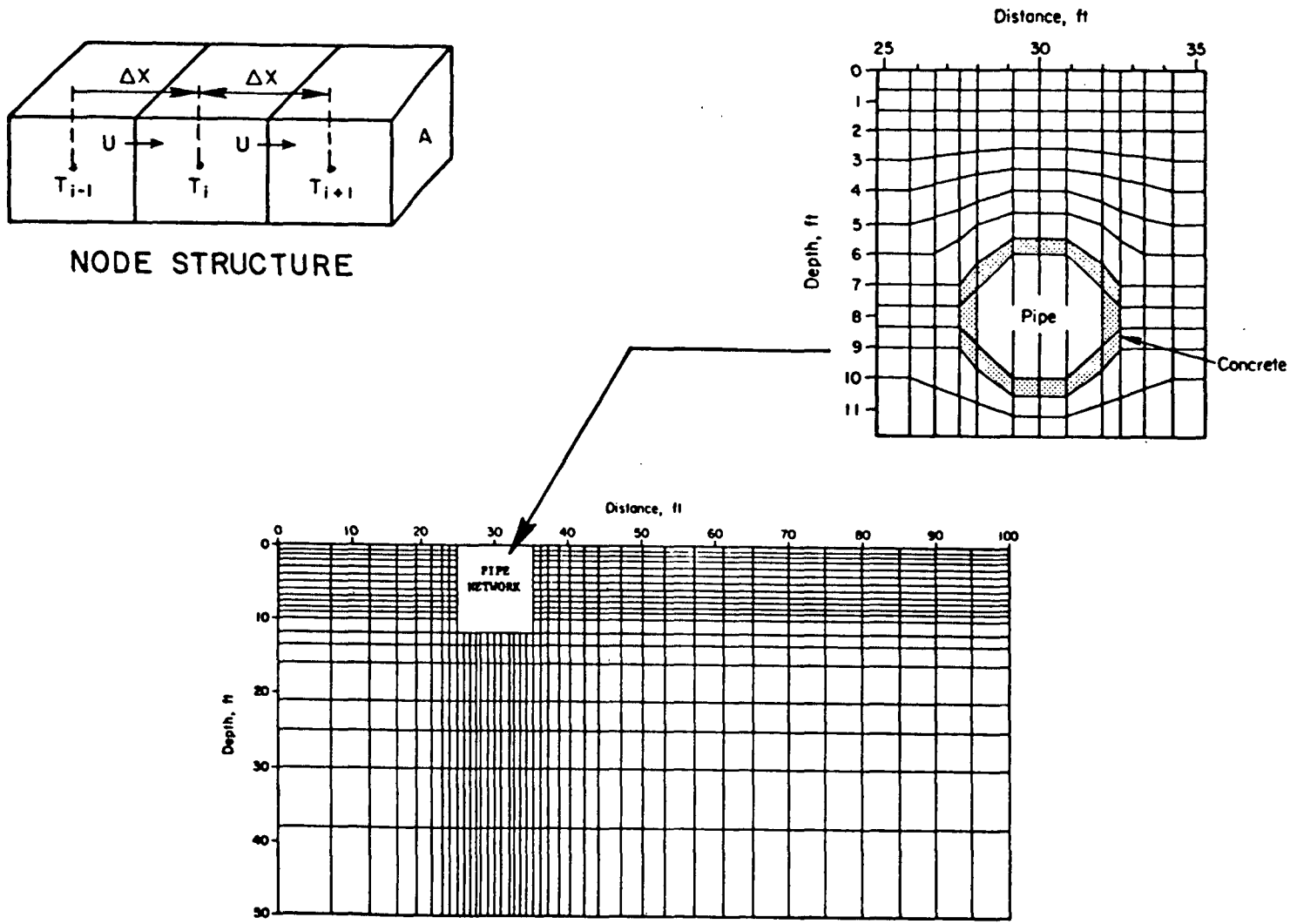

FIGURE 9. NODAL GEOMETRY FOR THE CONVEC FINITE-DIFFERENCE MODEL

moisture content at piping nodes. The Ahmed model[53], developed at Ohio State University, is soundly developed for a specific experimental apparatus and would require modification for general use. The Slegel model[54], developed at Oregon State University, and the Schroeder model[55], developed at Texas A&M University, appear to offer superior modeling capability which may be adapted for assessment of ground-coil cooling operating with reasonable effort. Both models compute temperature and moisture flows at the surface of the ground from weather data. A relatively large timestep of 24 hrs used in examples with the Slegel model indicates that very small timesteps are not needed for stability--probably due to the use of an implicit method of solution. The Schroder model is very large (~4000 statements) but contains sophisticated means to reduce computing time and assure convergence. The timestep is altered internally and node mesh size is decreased in regions of high gradients as needed for convergence. The Schroeder model accounts for gravity effects on moisture flow. Flat, sloped, or mounded surface topography is modeled using triangular nodes at the surface. Computing time with either model may be high due to iteration involved with coupled heat and moisture equations.

The Oak Ridge National Laboratory is developing the Mei/Fischer model for analysis of ground-coupling heat transfer for isolated vertical coils[56]. The coil consists of a tube-within-a-tube with liquid flow into the center tube and out of the annuli. Convective heat transfer to the walls of the inner and outer tubes are calculated from input values of the convective heat transfer coefficient at the inner wall and at the walls of the annuli. Constant input values are used for the thermal properties of the fluid, piping, and soil.

Figure 10 shows the nodal network of the Mei/Fischer model which is internally generated from specified values of piping radii, radius to undisturbed soil, depth of coil, and number of vertical nodes. Heat rejection or extraction is simulated by imposing a temperature change using steady-state heat-pump data.

Cycling behavior of the ground coil was modeled by specifying operating time as a function of time of day and portion of each hour for a typical day of the month. The program uses an explicit method to solve the governing differential equations. Because the nodal geometry includes

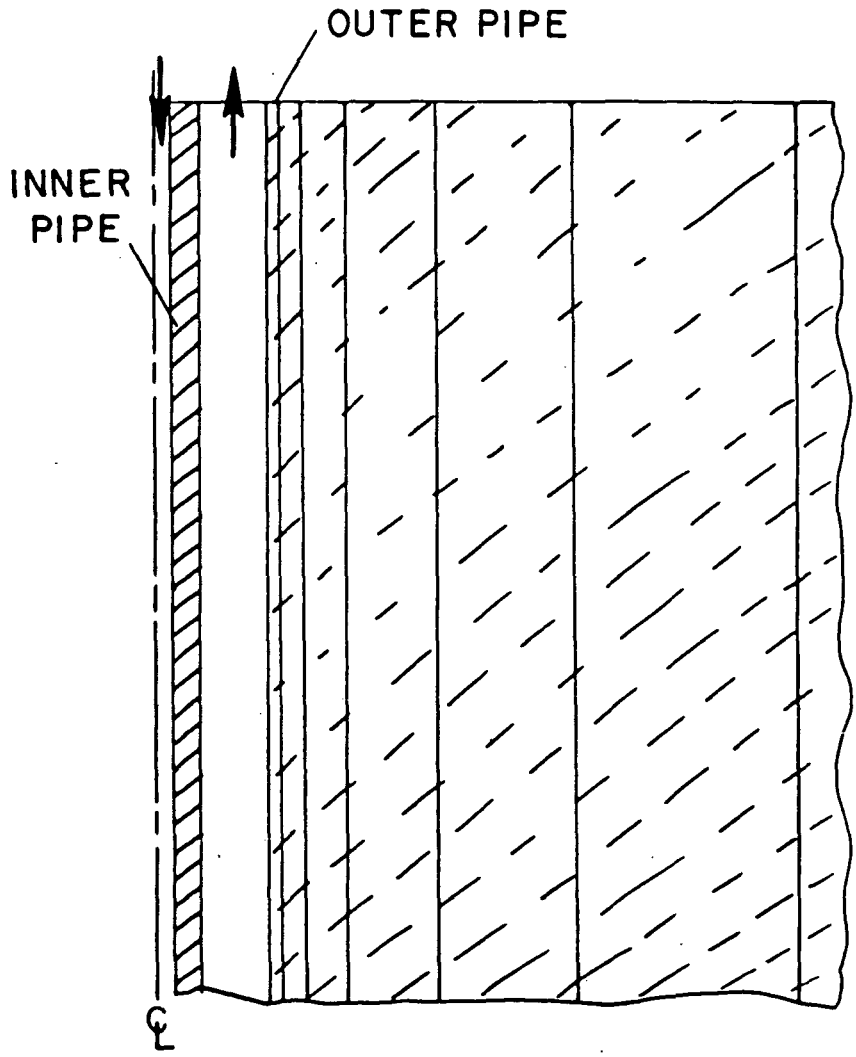

FIGURE 10. NODAL GEOMETRY FOR THE MEI/FISCHER ORNL VERTICAL FINITE-DIFFERENCE MODEL

fluid and inner piping nodes, a timestep of less than a second is required for calculation stability.

Output temperatures are provided for each node at user-controlled intervals of time. These values include liquid temperatures at up to 10 depths in the inner pipe and in the annuli, inner piping temperatures, and soil temperatures adjacent to the outer pipe and at five radial distances from the pipe at each depth.

Experimental validation of this model will be conducted in 1982 by comparison with data from a deep vertical coil being installed at ORNL.

The University of Liege developed a finite-difference model of a single vertical coil for the Belgian government[57]. The model has not been experimentally verified and work has been discontinued on it.

Claesson at the University of Lund in Sweden developed the ULU2 model for horizontal serpentine coils which utilizes variable soil properties[58]. Surface temperatures are computed as a function of convection, radiation, and ambient air temperature. Heat extraction is computed as a function of ambient temperature. Freezing in the vicinity of the pipe is accounted for by adjustment of soil properties at 0 C.

AGA-Thermia, in Sweden, has developed the YTSIML model for multiple horizontal serpentine coils from the base provided in the ULU2 model[24,59-62]. Soil properties are computed as a function of mineral density, quartz content, dry density, moisture content, and temperature. Freezing is assumed to occur at 0 C and is modeled by adjusting the properties of the soil from unfrozen to frozen values. Moisture migration is not modeled. Surface temperatures are computed from 30-year average weather data.

The YTSIML model simulates heat flow in a cross-section perpendicular to an infinite piping grid divided into rectangular cells. Heat capacities are lumped to the center of each cell and these centers are coupled by thermal resistance. Cell dimensions are chosen so that areas with high thermal gradients have smaller cells. An analytical conduction equation is used to model heat flow from the coil to nearby cells. Heat-pump performance is modeled by a simple model. Comparisons with experimental data show both good short (<10 hrs) and long-term agreement in brine temperatures for heating operation.

Cantherm, a Canadian subsidiary of AGA-Thermia based in Montreal, has extensively used the YTSIML model to develop application nomographs for

systems with heat-pump heating and direct cooling with coils buried at less than 1 m deep[24]. A particular concern of the modeling effort is to provide sufficient coil length and proper burial depth to assure thawing of the soil about the coil by the start of the following heating season.

Figure 11 shows general features of the Cantherm/AGA-Thermia nomographs used for sizing heating-only systems. From an on-site soil sample, the soil is typed in one of five categories and the moisture content is measured. The nomograph factor is found on the nomograph from the soil type and moisture content. Then a second line is drawn through the nomograph factor and climate zone, which provides the burial depth and maximum heat extraction rate per unit area of coil.

In addition to the proprietary design nomographs, the Cantherm application methodology available to dealers includes extensive proprietary installation guidelines relating to excavation, backfill, terrain features, connections, conduits through walls, alternate serpentine configurations, parallel loop designs, etc.

The Technical University of Munich in West Germany developed a model for multiple horizontal serpentine coils[63] which utilizes constant soil properties. Surface temperatures are calculated as in the ULU2 model. Heat extraction is modeled by specification of brine temperature. Additional work is planned to model moisture diffusion.

The Cube-Ingenieur Union has developed the CUBE model for multiple horizontal serpentine coils[64] which appears to be similar to the TUM model but is more sophisticated and has been verified. Soil properties are computed from analytical expressions as a function of time from inputs of soil type and moisture content as a function of depth. Freezing is assumed to occur gradually about the freezing point. Experimental data are used for the latent heat of fusion and the thermal conductivity is adjusted from unfrozen to frozen values. An analytical conduction relationship is used to model heat flow from the pipe wall to adjacent soil nodes. Moisture migration is not modeled.

The Crank-Nicholson mid-difference approach is used in solving the governing equations. A variable time step is computed during the run as required for stability with minimum run time as in the CONVEC model.

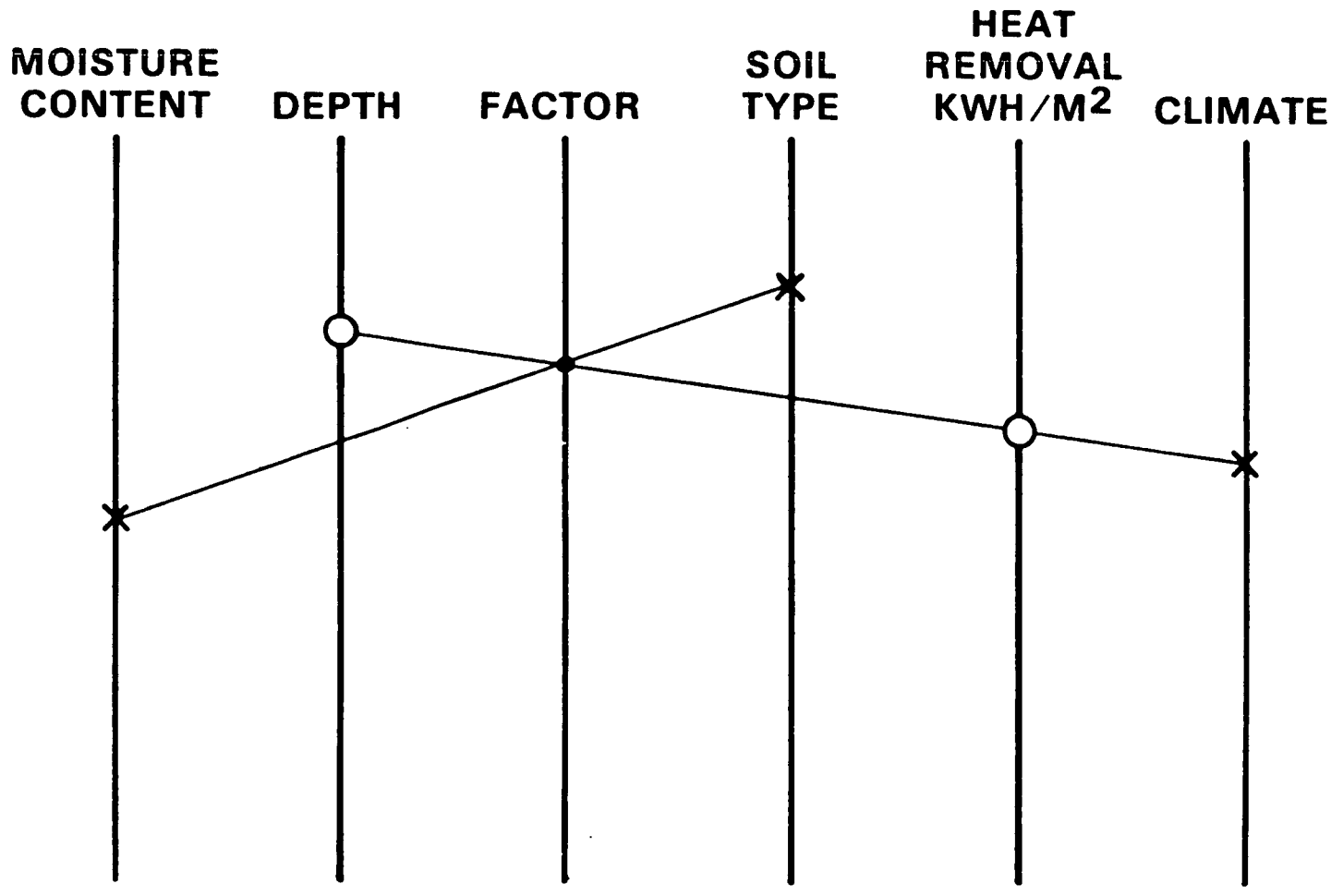

FIGURE 11. CANTHERM/AGA-THERMIA DESIGN NOMOGRAPHS

Figure 12 shows the nodal geometry for the CUBE model. The rectangular nodal network for the region bounded by a plane through the pipe and a plane equidistant between pipes is internally generated from inputs of coil layout and elemental size of the grid.

Time-dependent surface temperatures are computed with analytical expressions using monthly average weather data. Heat transfer coefficients are input for convection from the upper surface to the air and from the brine to the pipe wall. Heat extraction rates are computed with a simple degree-day model and a simple heat-pump model based on a Carnot efficiency, ambient air temperature, brine temperature, and appropriate temperature differences at the heat exchangers.

Outputs printed by the program include brine temperature, ground temperature distribution, air temperature, heat-pump output and COP, heat-extraction rate, and total heat extraction to date.

Development of the CUBE program was 80 percent financed by the German Ministry of Research and Technology (KFA Julich) and prepared under subcontract by a firm of geophysical engineering consultants (Ing.-Buro fur Geophysik: Dr. Sattlegger). The program has been compared to experimental data on undisturbed ground and for a single pipe installation. Agreement with undisturbed ground data was particularly good when the lower isothermal boundary was set lower than 10 m. Since the model was not developed for simulation of single pipes, the maximum possible spacing of 2.8 m was used. Good agreement of ground temperature profiles was achieved in a comparison for a complete heating season at the Balstrag installation. The 40 mm O.D. x 10 m long pipe was buried 1.5 m deep in clay.

The CUBE program with a life-cycle economic analysis subprogram has been used to generate optimal dimensioning and heat extraction values for heating-only systems such as the following:

- Minimum spacing = 0.8 m
- Optimum depth = 0.5 to 1.0 m (in agreement with AGA-Thermia/ Cantherm values).

Figures 13 and 14 show further optimization results for the first three types of excavation methods shown on Figure 4 and described on page 12.

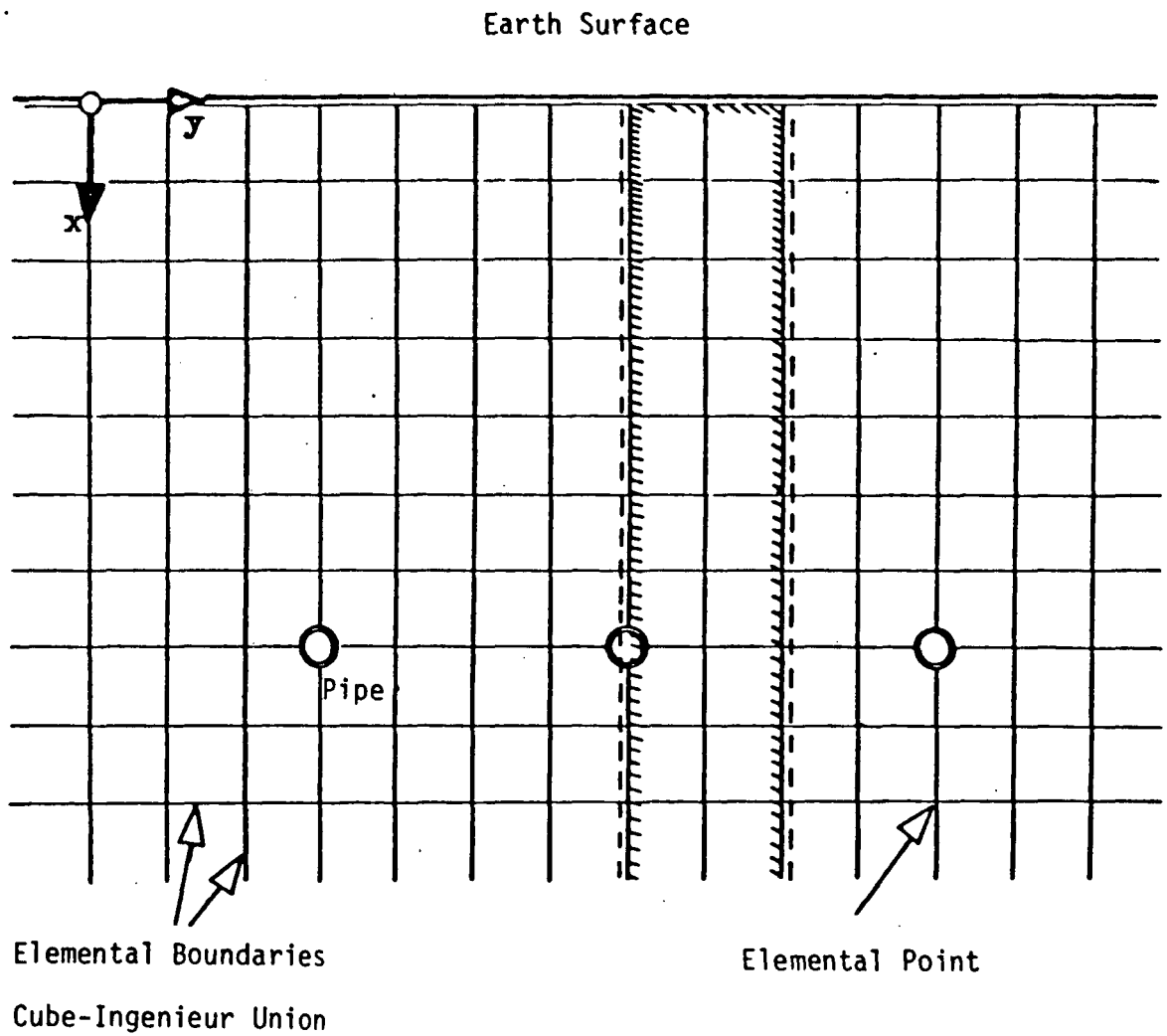

FIGURE 12. NODAL GEOMETRY FOR THE CUBE FINITE-DIFFERENCE MODEL

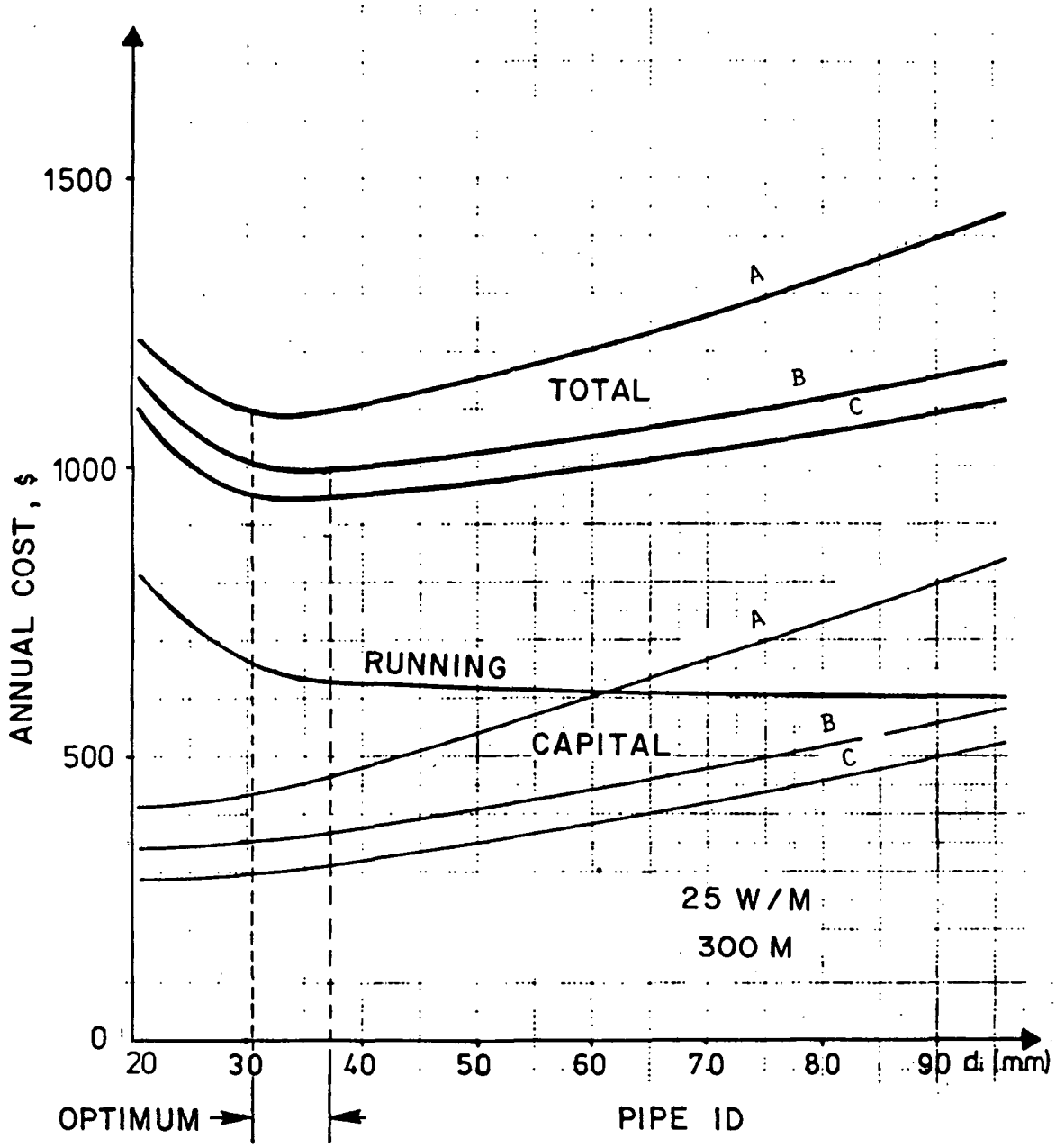

FIGURE 13. OPTIMUM PIPING SIZE

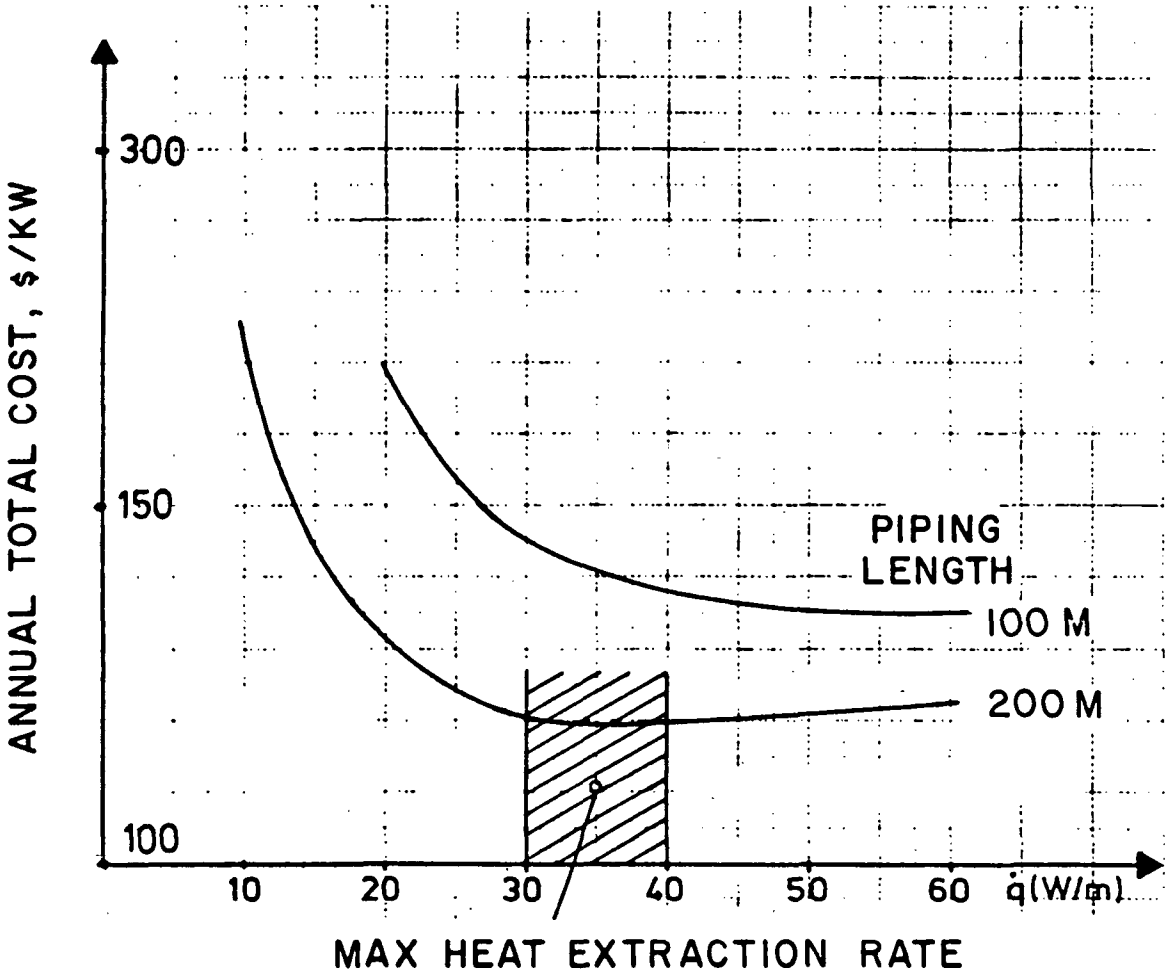

FIGURE 14. OPTIMUM MAXIMUM HEAT EXTRACTION RATE

Letters A, B, and C correspond to excavation methods A, B, and C in Figure 4. Figure 13 shows that the optimum inside coil diameter for polyethylene coil is in the range of 30 to 40 mm. Figure 14 shows that the optimum maximum heat extraction rate is in the range of 30 to 40 W/m. The corresponding annual average heat extraction rate is less than 20 W/m.

Finite-Element Models. The Acres Consulting Services, Ltd. in Niagara Falls, Ontario, has developed finite-element models for multiple horizontal coils and multiple vertical coils[65] in a program sponsored by the National Research Council of Canada. The basis of the numerical solution in this model is the Galerkin, weighted residual, pseudofunctional method. The programs were designed to run with 1/2 month timesteps for run times of three to four years. The nodal structure of each model is very detailed and triangular elements are used as shown in Figure 15. The modeling region is bounded by adiabatic planes through the pipe and through the soil midway between pipes.

Soil properties are computed as a function of dry density, temperature, and moisture content from fitted relationships for soil typical of the Niagara Falls area. At the ground surface, temperature and moisture are specified as annually varying sinusoidal values. Moisture at several depths is specified and varies linearly from that at depth to the surface value. Moisture migration is not computed during the run. The model accommodates freezing with the assumption that moisture in excess of 22 percent would freeze at 0 C and the remaining moisture would freeze at a temperature computed from an analytical relationship. Snow cover is accommodated by an adjustment to the surface temperature. Evapotranspiration, radiation, and convection at the surface are not explicitly modeled.

Heat extraction and heat-pump models are similar to that in the CUBE model. The ACRES models were used to generate performance data on baseline system configurations which showed the progressive growth of the frost zone. The developers were unable to explore effects of pipe spacing, burial depths, and extraction rates as scheduled because of delays in model development related to model stability. No experimental verification of the model is available.

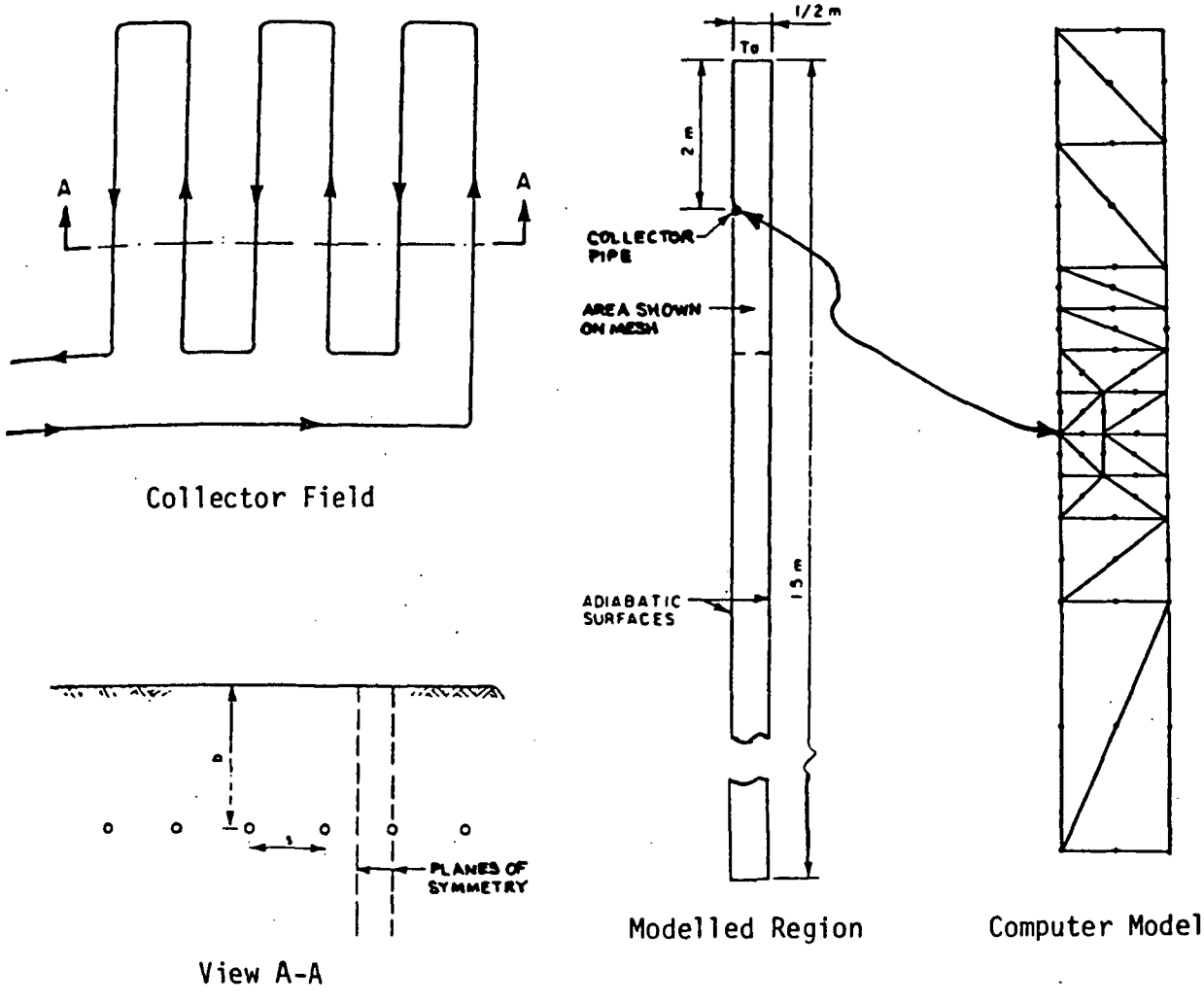

FIGURE 15. PIPING LAYOUT AND NODAL GEOMETRY FOR THE ACRES MODEL

Battelle-Columbus and E. W. Brooker and Assoc. developed the finite-element Thermal Soil Behavior Model[66] as a predecessor to the CONVEC model. The solution method employed is the same as in the ACRES model. Other features of this model are the same as described previously for the CONVEC model. Battelle abandoned the finite-element potion of this code in development of the CONVEC model in order to accommodate underground moisture flow.

A two-dimensional finite-element model of heat and moisture transfer in soils was developed at Colorado State University by Walker[67] to compute temperatures and moisture content in buried thermal energy storage for solar systems. The program has extensive capabilities but need improved accuracy in predicting values of moisture content.

The TNO organization of the Netherlands has developed finite-element models for multiple horizontal coils and multiple vertical coils[68]. The basis of the numerical solution is the Dufort-Frankel method for the soil and piping elements and the Crank-Nicholson mid-difference method for the brine flow elements. A proprietary TNO subprogram called BERTRAM is used for solution of the finite-element equations. The nodal network is rectilinear with nodes with four and five sides. The boundaries of the nodal network are the same as in the CUBE and ACRES models. A time step of 1/2 to 5 hours is used. Soil properties are assumed to be constant because of the anticipated use of the model in the Netherlands soil where the water table level is less than 1 m deep in most of the land areas. Any freezing allowance is accounted for by increasing input values of thermal conductivity by 1.2 for the soil near the pipe. Surface temperature is a function of ambient air temperature and undisturbed soil temperature at 0.75 and 1.0 m deep. The heat-extraction and heat-pump models are similar to those in the CUBE model.

The TNO models have been used for parametric studies concentrating on conditions in the Netherlands. Experimental data from a few experiments were used to fit some of the constants in the program but verification with data from other sources has not yet been conducted.

Schlosser at the Technical University of Denmark developed the TUD3 and TUD4 finite-element models for multiple horizontal and vertical coils[47]. These models are similar except that the TUD3 model accounts

for freezing and the TUD4 model does not. Figure 16 shows the triangular elements of these models and end-of-month soil temperatures computed with the TUD4 model.

The TUD3 model uses an enthalpy balance method so that freezing does not introduce a discontinuity in the model. Soil temperatures are computed from the known enthalpy distribution using appropriate thermal and physical properties.

Surface temperatures are computed from a periodic function for ambient air temperature fitted to weather data using assumed constants for convection and radiation. The TUD3 model was adjusted to match measured undisturbed ground temperature by altering heat transfer constants.

Soil temperatures are solved for in the TUD4 model by Gear's method, which significantly reduces computing time. This model suffers from the same weaknesses as the full model: it has been fitted to old weather/soil data of doubtful accuracy and has not been verified with other data. Heat-extraction and heat-pump models similar to that in the CUBE program are used in both models.

Laborelec has developed the LAB3 finite-element model for a horizontal coil based on an earlier electric-cable ground warming model which includes freezing but not moisture migration[30,31]. A Laborelec proprietary program is used to solve for temperatures in a nodal network with triangular elements. Soil thermal capacity is adjusted in the vicinity of the freezing point to account for the latent heat of fusion during freezing using the same data as in the CUBE model. Otherwise, constant soil properties are used. Surface temperatures, heat-extraction and heat-pump characteristics are computed as in the CUBE model. Verification studies of the LAB3 model are being conducted in 1981.

Three-Dimensional Models

The GROCS program developed by Brookhaven National Laboratory can provide three-dimensional results for a single-pass horizontal coil by segmenting the length of nodes above and below the plane of the coil. In this way, variations in brine temperature along the length of a coil can be studied. Such a model would be useful in evaluating systems which

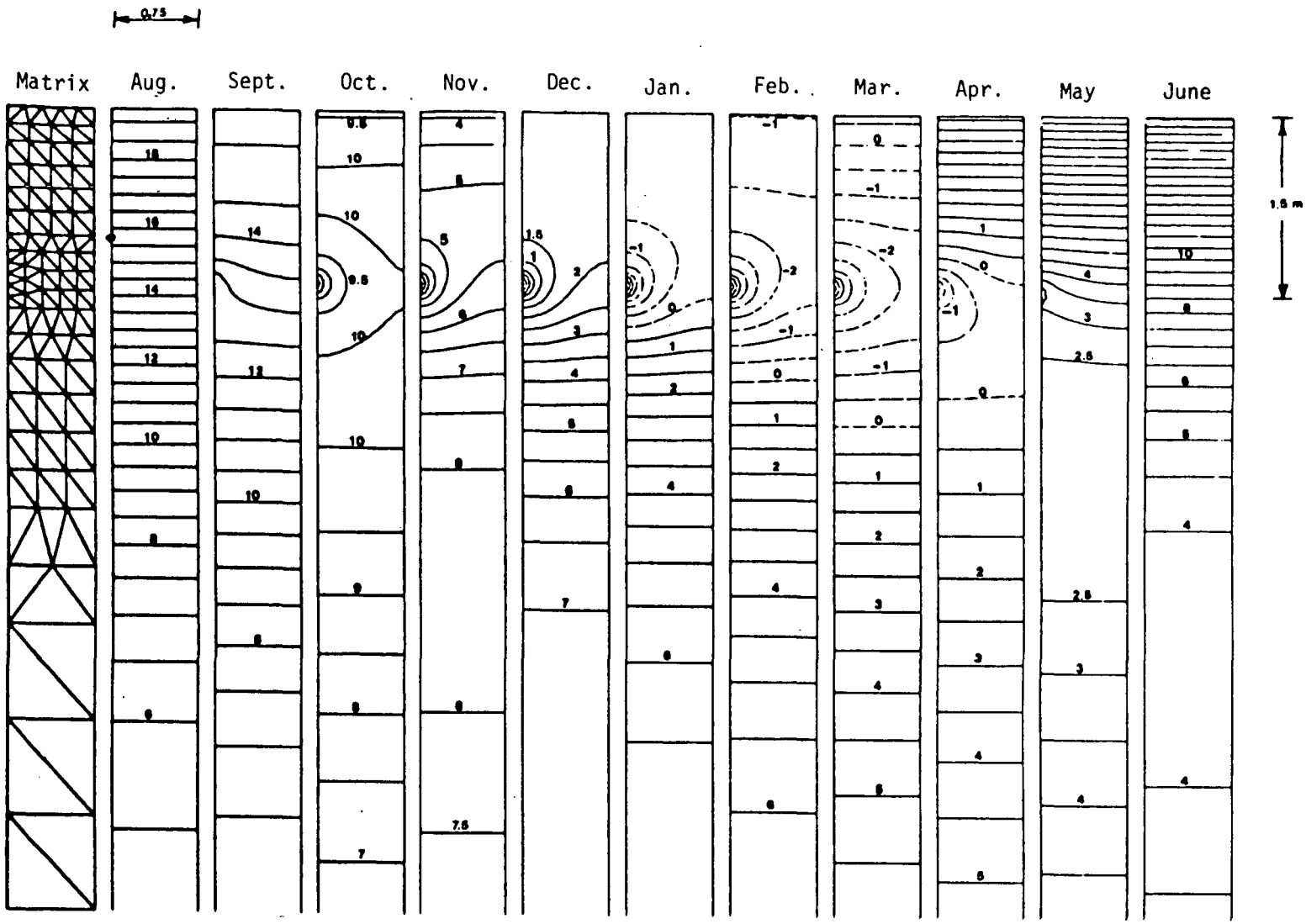

Isotherms around pipes with heat extraction (1.5 m under surface) without allowance for latent heat. Temperatures in °C.

Technical University of Denmark

FIGURE 16. NODAL GEOMETRY AND COMPUTED SOIL TEMPERATURES FOR THE TUD4 MODEL

extract and reject heat in alternate flow directions. In order to model such length-of-field effects, the coil configuration should be a single pass between manifolds rather than serpentine.

Landes and Haslbeck of the Hochschule der Bundeswehr have prepared the HDB three-dimensional finite-difference model for flat-plate vertical coils for the West German Army[70]. The plate surface temperature is assumed to be equal to the brine temperature which is computed from soil temperatures and heat demand. Surface temperatures are computed from a periodic function. Freezing is not modeled. The model has not been verified.

Availability of Design Methodologies

Design methodologies based on experience and rules of thumb will continue to be used within limited geographic regions. More sophisticated approaches are needed to properly assess design innovations and applications outside the known area of experience.

Steady-state models are judged to be of limited usefulness, since even the most elementary transient model will provide more accurate results.

The correlations of transient experimental data by Vestal and Hadley appear to have limited usefulness because of uncertainty in selecting a representative value for the design temperature difference. Vestal's proposed design procedure includes a wealth of related application information.

The Kalman model is judged to be the most useful of the simpler transient models in that the model utilizes well known theory (used by Penrod, Ingersoll-Plass, and others), is set up to provide typical day of the month performance for both heating and cooling, has a reasonably good heat-pump model, and contains an elementary life-cycle cost analysis. In addition, the Battelle-modified version is compact and user-oriented. The Kalman thesis contains a wealth of application information.

Monthly values computed with the ground-coupling portion of the American Heliothermal lumped-parameter model were compared to results for the same design problem computed by the Kalman and GROCS models in a separate design study. Comparisons of average monthly brine temperatures

computed by all three models appear to agree reasonably well. The original American Heliothermal program contains a stochastic weather model and a good heat pump model based on least squares fit of steady-state performance data.

The GROCS program has been available for use with TRNSYS since September 1979 and is presumably in use by many organizations in conjunction with the TRNSYS program. TRNSYS provides excellent support programs for weather data, building loads, and heat-pump performance. The stand-alone driver program prepared by Battelle coupled to the GROCS horizontal coil subprograms should simplify the effort in conducting ground-coupling optimization studies.

The CONVEC model is available for application by Battelle but would have to be adapted to heat-pump earth-coupling studies. A particularly strong feature of this model is the calculation of ground surface temperatures and freeze/thaw zones about the pipe.

The Mei/Fischer vertical-coil model will be available from ORNL after verification studies are completed. This model is more appropriately applied to deep wells in that it uses constant soil properties. Variable soil properties and freezing could be accommodated in the model with minor development effort, if needed, for modeling performance of shallow vertical coils.

Listings for all of the U.S. heat and moisture models are available in the literature, except for the Hartley, Cassel, and Gee models. A more detailed assessment of the heat and moisture models has been prepared by Battelle.[69]

The ACRES horizontal and vertical-coil models are available for contract research by the developers. The programs feature a detailed modeling capability which includes freezing. No further model development has been conducted since the original study was concluded in June 1978.

Of the European models, only the YTSIML and CUBE models show some evidence of becoming publicly available. The TNO and Laborelec models rely on proprietary subprograms. The University of Lund and Technical University of Munich models appear to be less sophisticated than the YTSIML and CUBE models. The Technical University of Denmark models are no longer supported and may need further development.

Presently, the Cantherm subsidiary of AGA-Thermia in Canada is utilizing the YTSIML program in preparation of application materials for the North American market and wishes to restrict distribution of the program while establishing a market position.

Reported evidence indicates that the CUBE model may be the most extensively tested and proven model in use and appears to be available on the basis of contracted research or outright purchase. The author of the CUBE model was unable to get continued financing for further model development from the German government.

A strong feature of both the YTSIML and CUBE models is the capability of detailed modeling of soil temperatures about the coil with variable soil properties including freezing. Both programs are weak in modeling loads and heat-pump characteristics, and neither are suitable for modeling vertical coils.

REVIEW OF COSTS OF EXISTING INSTALLATIONS

Experience with marketing ground-coupling heat-pump systems in the U.S. suggests that the primary additional costs for the ground-coupled heat-pump system is the installed cost of the ground coil or well itself[11]. The additional cost of the brine pump and refrigerant-to-brine heat exchanger should be substantially offset in a mature product by eliminating the outdoor air-to-air coil and fan on conventional air-source units. Installed cost of ground coils is about $4.60* per m for horizontal configurations and $25 per m for a deep vertical coil. A trenching cost of about $3 per m included in the above figure for horizontal coils agrees with recent experience in two separate experiments in which trenching was contracted locally at the prevailing rates[71,72].

Installation costs in Germany are much higher than the above values due to a substantial fee related to acquisition of required permits. Von Cube[9] conducted a cost optimization in West Germany and determined that the installed cost of the ground coil could be reduced to about $10 per m using a plow excavator to install flexible plastic piping. Using this value, the ground coil is estimated to cost about $120 per kW of heat delivered to the conditioned space. The ground coil of a 10-kW system installed with conventional excavation techniques costs about $450 per kW. This value decreased to $250 per kW for an 80-kW system[73].

Two German companies offer 50 to 100 m deep vertical-coil systems at $1,500 to $2,000 per bore and $900 to $1,000 per bore. A single family home would require about four such bore holes.

In Belgium, costs for horizontal ground coils range from $2.4 to $24 per m and $48 per m for one vertical system[74].

In Sweden, the cost of a ground coil for one 13-kW heating system was about $129 per kW of heat delivered to the conditioned space[75].

Operating costs for ground-coupling heat-pump systems can be estimated from expected space conditioning loads using a heating seasonal performance factor of 3.0, assuming that pumping power for circulating the brine is included in that figure. Annual electrical consumption by a ground-coupled heating system for four German residences was correlated by Eq. 5:

---

* 1981 dollars.

$$E = 0.91\ H \tag{5}$$

where

E = annual electrical consumption per unit of living area, kWh/m^2

H = Heating demand of the residence per unit of living area, W/m^2.

Annual maintenance costs based on 25 years of operation of the Cube system[9] is estimated to be about $65 or about 1.5 percent of the capital cost of the system.

AVAILABILITY OF DESIGN INFORMATION

Under most circumstances, design application information is obtained from organizations involved in marketing products or services. The following North American organizations were judged to have significant recent experience in application of ground-coupling technology.

Company	Comments
Alten Northwest 1134 Poplar Pl. S. Seattle, WA 98144 206/329-9692	Hybrid heating/cooling system with horizontal 4-inch PVC pipe coupled to unglazed solar collectors. Ethylene-glycol/water brine.
Cantherm 8089 Trans-Canada Highway St. Laurent, Quebec H4S 1S4 Canada 514/334-4870	Heating systems with direct cooling using horizontal polyethylene tubing and ethylene-glycol/water brine.
Genesis Energy Systems Div. of Hattersly & Sons, Inc. 3989 Mobil Avenue Fort Wayne, IN 46895 219/483-7974	Hybrid heating systems with solar collectors.
E-Tech, Inc. 3570 American Drive Atlanta, GA 30341 404/458-6643	Heating/cooling systems with horizontal polyethylene tubing in southeastern U.S. under contract to U.S. DOE.
Geosystems, Inc. 3623 N. Park Drive Stillwater, OK 74074 405/372-6851	Heating and cooling systems using polybutylene tubing (horizontal) and PVC pipe (vertical) and water or propylene-glycol/water brine.
Kaman Sciences Corp. 1500 Garden of the Gods Road Colorado Springs, CO 80907 303/599-1500	Hybrid heating/cooling systems with solar collectors and buried tanks.
Trendsetter Industries 10183 Croydon Way Sacramento, CA 95827 916/361-0107	Heating/cooling systems with polybutylene tubing irrigated by septic water or external drip irrigation.

In general, there appears to be a lack of design information available for systems which reject a significant amount of heat to the ground. Rules of thumb, nomographs, simple analytical correlations, and computer models have been discussed in previous sections.

Soil properties required in some of the design procedures are not usually available for local soils; however, fairly extensive data are available for various soil classifications. Kersten[76] measured thermal properties of an extensive number of frozen and unfrozen soils and described appropriate measurement methodology. Property data and correlations for selected soils, available in the documents on heat and moisture models, are summarized in the Battelle review of these documents[69]. Other sources of soil data are included in work by von Cube[9], Kalman[33], Mickley[77], Havens[78], and Black[79]. Specific heat and thermal conductivity of soils can be calculated by the de Vries method[80,81] as a function of water content, temperature, soil mineralogical composition, and bulk density. A program for calculating thermal conductivity by this method with a HP-97 programmable calculator has been prepared and validated by Walker[67]. A number of other correlations for thermal conductivity of soils are available[7,34]. An in situ method of measurement of soil thermal conductivity is available[82,83]. Far-field earth temperatures are best obtained from local measurements; however, several analytical approaches are available[33,50].

CONCLUSIONS

Conclusions from this survey are discussed in the areas of coil geometry, system performance, reliability, design methodologies, and design guidelines.

Coil Geometry

Horizontal serpentine coils have been and at present are the most common coil configuration, particularly for heating-only systems. With the availability of regeneration from heat rejection by systems installed in climates with a substantial cooling need, other coil configurations are practical. These include multiple shallow vertical coils and horizontal coils with supply and return tubing in the same trench at different elevations. Deep well configurations are attractive when sufficient ground space is unavailable; higher installation cost per unit length of four to six times that for a horizontal coil is partially offset by an improvement in conductance to the soil of at least two to three times.[34]

System Performance

A seasonal performance factor of about 3.0 can be expected for a properly designed and installed residential ground-coupled heat pump system in the heating mode and about 2.8 in the cooling mode. This represents about a 50 percent improvement in seasonal heating performance in comparison with that for air-source heat pumps and about equivalent cooling performance. Lower performance can probably be expected from systems installed in the U.S. using available water-source heat pumps designed for operation at well-water temperatures of 50 F or higher.

Cycling operation has been found to enhance heat extraction from the ground for systems designed to operate above freezing because the soil adjacent to the coil has a chance to recover to far-field conditions. This transient phenomenon is not well understood. It appears that oversizing of ground-coupled heat pumps with respect to building heating loads may enhance overall heating system performance.

Available experimental data from programs conducted in the late '40's suggest that thermal conductance from the coil to far-field soil will be improved with sand or clay backfill for heating or cooling, respectively. With sand backfill, moisture migration to the coil during heating is presumably enhanced with sand backfill. Conversely, with clay backfill, moisture migration away from the coil during cooling operation is retarded.

Reliability

Long-term (∿20 years) durability of buried steel and copper tubing has been demonstrated. Life expectancy of thin-walled polyethylene and polybutylene service-water tubing in the heating-only application is expected to be equally as good; however, present experience is limited to less than five years. In the cooling application with heat rejection temperatures exceeding 37.8 C, some cracking of polyethylene tubing has been experienced upon subsequent cooldown for heating operation. This was due to localized stresses induced by conformity of the tubing to stones when hot.

Freeze protection is required with water in the loop to avoid heat exchanger failure, particularly in the event of a circulating pump failure in the long term. Some heat exchangers used primarily on well-water heat-pump systems utilize a concentric copper tube within a polybutylene tube that is less susceptible to freezing damage. The most foolproof approach is to use an antifreeze mixture of water and ethylene glycol, propylene glycol, or calcium chloride.

Receding of the soil from the pipe after a period of several years was experienced in the late '40s. An understanding of this phenomenon may be critical to the long-term operating success of these systems, particularly for systems operating with summer heat rejection.

Design Methodologies

A wide variety of design methodologies are or have been utilized by system developers. Rules of thumb related to coil length and burial

depth based on prototype installations have served well for a particular locality; however, designers need more information to properly assess design innovations and effect of climatic variables.

Design methods based on line-source theory can provide typical day of the month values that are useful for optimizing burial depth and coil length. The Kalman-Georgia Tech model modified by Battelle appears to be a useful design tool but has not been adequately experimentally verified.

Lumped parameter models, such as the American Heliothermal model, utilize rather gross approximations to actual heat transfer conditions in the soil but can provide useful transient performance information.

Finite-difference and finite-element models predict brine and soil temperatures for a specific model geometry. The accuracy of predictions are dependent on the level of detail in the model for nodal geometry, soil properties, surface effects, heat-pump characteristics, and space-conditioning loads. No ground-coupling heat-pump model at present accounts for moisture migration due to thermal effects.

None of the more complex European models are publicly available at present for one reason or another. Of these, the YTSIML and CUBE models appear to be the most sophisticated. The CUBE and CONVEC finite-difference models and the ACRES finite-element model are available from the developers for contract work. All of these models include provision for freezing of the soil near the coil.

The GROCS finite-difference model is a useful design tool for evaluating weekly or typical day-of-the-month brine temperatures and has been widely distributed in the U.S. for use as a TRNSYS subprogram. The stand-alone version of GROCS for a horizontal serpentine coil prepared by Battelle should be a useful optimization tool. However, in its present form, GROCS provides little detail in the vicinity of the coil and does not model freezing.

Heat pump and space-conditioning load models used in most ground-coupling models are elementary and could be much improved with publicly available models.

Design Guidelines

Despite an intense effort of experimental work in the '40s and '50s in both the U.S. and Europe, no suitable general design guidelines have been developed. European experience over the last 30 years can be summarized by a lack of use of these systems due to an economic disadvantage with respect to fossil-fueled heating systems and a lack of suitable, publicly available, design methods. Modern-day research and development efforts have utilized plastic tubing and computerized analytical techniques. Design methods have been developed in the last 10 years based on complex models that are expensive to use. There are several well-developed proprietary design and application methodologies for northern climates based on complex models. Simpler models, more suitable for on-site use, have been developed, but these are inaccurate and therefore no better than rules of thumb. Major uncertainties exist regarding suitable design and installation practices for systems with substantial cooling operation, due to inability of models to deal with moisture migration and soil recession. Thus, no publicly available design guidelines exist, based on theory and experiments, which enables the optimum design to be selected for each installation. In fact, in Europe, the economic optimum is often used with fossil-fuel backup.

In summary, further design-method development efforts are necessary to provide installers and manufacturers with pertinent design information in order to stimulate further implementation of ground-coupled heat pumps in the U.S. The availability of this information will also help to minimize the occurrence of inadequately designed systems which could actually inhibit acceptance of ground-coupled heat pumps. Specifically, capabilities of U.S. design methods need to be improved to handle freezing of the soil as the best privately held European models currently do. Design data for the U.S., similar to that already developed in Europe as mentioned above, also needs to be developed. Finally, a research effort is needed to develop parametric data on the design and performance of a ground-coil during cooling operation using one or more of the heat and moisture models that were developed for other applications.

RECOMMENDATIONS

Further development of design methods are necessary to provide installers and manufacturers with appropriate analytical tools and pertinent design information for stimulating further implementation of ground-coupled heat pumps in the U.S. The availability of these tools and information will also help to minimize the occurrence of inadequately designed systems which could inhibit acceptance of ground-coupled heat pumps.

Specific recommendations for near-term research and development are:

(1) Capabilities of U.S. design methods need to be improved to handle freezing of the soil, as the best privately held models do to extend the range of performance predictions to lower source temperatures encountered in systems used in northern climates, which are operated with little or no auxiliary energy.

(2) A research effort should be undertaken to develop parametric data on the design and performance of a ground coil during cooling operation using one or more of the heat and moisture models developed for other applications.

(3) Appropriate heat-pump and space-conditioning load models for use in ground-coupling models should be developed from publicly available methodology.

(4) Available experimental data from historical and current programs should be analyzed/compiled or, if necessary, developed for use in development of comprehensive design guidelines.

(5) Current field experience with polyethylene/polybutylene service-water piping in ground-coil systems should be monitored to establish durability of such piping in this application.

(6) Current field experience with sand, clay, or native-soil backfill should be monitored to establish recommended type of backfill for system applications ranging from heating-only to cooling-only service.

REFERENCES

1. Wirth, E., Aus der Entwicklungsgeschichte der Warmepumpe Schweizerische Bauzeitung, 73, No. 42, pp. 647-651 (1955).

2. "Initial Survey of Heat Pump Research", EEI Journal (March 1948).

3. "Progress Report on Heat Pump Research", EEI Journal (August 1949).

4. "Research Results Concerning Earth as a Heat Source or Sink", EEI Journal (September 1953).

5. Ambrose, "Heat Pumps and Electric Heating", Wiley and Sons, Inc. (1966).

6. Ingersoll and Plass, "Theory of the Ground Pipe Heat Source for the Heat Pump", Heating, Piping, and Air Conditioning, 20, No. 7 (July 1948).

7. Griffiths, M.V., "Heat Pump Sources. Heat Transfer from Soil to Buried Pipes", ERA Report Y/T 18, Electrical Research Association, Leatherhead, U.K. (1955).

8. Sumner, J.A., "Domestic Heating by the Heat Pump", J. Inst. Heating and Ventilating Engineers, 23, pp. 129-151 (July 1955).

9. von Cube, H.L. and Stiemle, F., Warmepumpen, Grundlagen und Praxis, VDI-Verlag VDI-Verlag GmbH, Dusseldorf (1978).

10. Geeraert, B., "Nordic Symposium on Heat Pump Systems", Goteborg, Sweden (October 15-16, 1979).

11. Visit of Sherwood Talbert (BCL) to Oklahoma State University and Geo-Systems, Stillwater, Oklahoma (February 1981).

12. Metz, P.D., "The Ground-Coupled Solar Heat Pump Program in the United States", Proceedings of the 5th Annual Heat Pump Technology Conference, Oklahoma State University (April 1980).

13. Personal conversation with Ralph Schlictig, Seattle, Washington (June 1981).

14. Scott, N.R., et al., "Analysis and Performance of an Earth-Air Heat Exchanger", Paper No. 65-840, Chicago meeting of American Society of Agricultural Engineers, St. Joseph, Michigan (1965).

15. McGill, R.N., "Crawl Space Assisted Heat Pumps", paper presented at the DOE Heat Pump Contractor's Program Integration Meeting, McLean, Virginia (June 1981).

16. Personal conversation with James Partin, GeoSystems, Stillwater, Oklahoma (July 15, 1981).

17. Bose, J.E., "Design and Testing of Solar Assisted Earth Coils", Final Report to DOE, Contract EM-78-S-01-4257 (January 1981).

18. Kalman, M.D., "An Investigation of Direct Expansion in Ground Source Heat Pumps", paper presented at DOE Heat Pump Contractor's Program Integration Meeting, McLean, Virginia (June 1981).

19. "Secondary Coolants (Brines)", Chapter 17, ASHRAE 1977 Fundamentals and "System Practices for Secondary Refrigerants (Brines)", Chapter 28, ASHRAE 1980 Systems Handbook.

20. Penrod, E.B. and Prasanna, K.V., "Analysis of a Proposed Solar-Earth Heat Pump", Eng. Exp. Sta. Bul. No. 74, University of Kentucky (December 1974).

21. Penrod, E.B. and Prasanna, K.V., "A Procedure for Designing Solar-Earth Heat Pumps", Heating, Piping, and Air Conditioning, pp. 97-110 (November 1969).

22. Ingersol, L.R., et al., "Theory of Earth Heat Exchangers", Chapter 13, Heat Conduction, Univ. of Wisconsin Press, pp. 240-271 (1954).

23. Andrews, J.W., "Technical Support: Solar Assisted Heat Pump Systems", Proc. of the DOE Heat Pump Integration Task Force held in McLean, Virginia (June 1981).

24. Oskarsson, S.V., "Ground Coupled Heat Pump Systems", paper presented at National Water Well Association Conference, and personal conversation (February 1981).

25. Vestal, D.M. and Fluker, B.J., "Earth as Heat Source and Sink for Heat Pumps", Heating, Piping, and Air Conditioning, pp. 117-123 (August 1956).

26. Bondurant, J.L., "Coupled Heat and Moisture Transfer in Soil With Applications to the Design of a Warm Water Subsurface Irrigation System", M.S. Thesis, University of Arkansas (1975).

27. Johnson, S.E., "Soil Temperature and Moisture Content Measurements for a System of Subsurface Heating Pipes", M.S. Thesis, Ohio State Universtiy (1976).

28. Shapiro, H.N., "Simultaneous Heat and Mass Transfer in Porous Media with Application to Soil Warming With Power Plant Waste Heat", Ph.D. Thesis, Ohio State University (1975).

29. Fordsmand, M. and Eggers-Lura, A., "Factors Determining the COP of Heat Pumps and Feasibility Study on its Improvement", Commission of European Communities, Proc. Int'l. Seminar entitled New Ways to Save Energy, Brussels, pp. 85-93 (October 1979).

30. Geeraert, B. and Steffens, J.C., "The Use of Soil With and Without Artificial Heat Generation as a Heat Source for the Heat Pump", Commission of European Communities, Proc. Int'l. Seminar entitled New Ways to Save Energy, Brussels, pp. 94-101 (October 1979).

31. Geeraert, B., et al., "Chauffage de Logements par Pompe a Chaleur Sol en Utilisant Comme Source de Chaleur l'Energie Solaire Stockee Dans les Couches Superficielles du Sol", Laborelec Report 8.5128. M.R2.BG.er (January 16, 1980).

32. Ingersoll, L.R., et al., "Theory of Earth Heat Exchangers for the Heat Pump", Heating, Piping, and Air Conditioning, 22, No. 5, pp. 113-122 (May 1950).

33. Kalman, M.D., "Earth Heat Exchangers for Ground Source Heat Pumps", M.S. Thesis at Georgia Institute of Technology (March 1980).

34. Vestal, D.M. and Fluker, B.J., "A Proposed Procedure for the Design of a Heat Pump Buried Coil", Texas Eng. Exp. Station, College Station, Texas (September 24, 1954).

35. Hadley, W.A., "Operating Characteristics of Heat Pump Coils -- A Rational Correlation", Edison Electric Inst. Bul., pp. 457-461 (December 1949).

36. Skartredt, G., et al., "Evaluation of Solar Collectors for Heat Pump Applications", Final Report to Albuquerque Operations Office, U.S. Dept. of Energy, Contract No. DE-AC04-78CS 35351 (August 1980).

37. Klein, S.A., et al., "TRNSYS - A Transient System Simulation Program", Eng. Exp. Sta. Rept. No. 38, University of Wisconsin (June 1979).

38. Personal communication with Prof. P. Worsoe-Schmidt and Mr. P. Dang, Tech. Univ. of Denmark, Lyngby, Denmark (1981).

39. Holt, C.F., et al., "The Simulation of Thermal Behavior of Permafrost Soil", ASME Paper 76-WA/HT-57 (1976).

40. Sophocleous, M.A., "Analysis of Heat and Water Transport in Unsaturated-Saturated Porous Media", Ph.D. Thesis, University of Alberta (1978).

41. Jury, W.A., "Simultaneous Transport of Heat and Moisture Through a Medium Sand", Ph.D. Thesis, University of Wisconsin (1973).

42. Hauk, R.W., "Soil Temperature and Moisture Fields as Predicted by a System of Coupled Equations", Ph.D. Thesis, Cornell University (1971)

43. Cassel, D.K., et al., "Soil-Water Movement in Response to Imposed Temperature Gradients", Soil Science Soc. Proc., 33 pp. 493-500 (1969).

44. Dempsey, B.J., "A Heat-Transfer Model for Evaluating Frost Action and Temperature Related Effects in Multilayered Pavement Systems", Ph.D. Thesis, University of Illinois (1969).

45. Gee, G.W., "Water Movement in Soils as Influenced by Temperature Gradients", Ph.D. Thesis, Washington State University (1966).

46. Hartley, J.G., "An Analysis of the Thermal Stability of the Soil Environment of Underground Electrical Cables", Ph.D. Thesis, Georgia Tech (1977).

47. Schlosser, K., "En Matematisk Model for Varmeoptagelse Fra Jorden", Report No. F28-78.01, Danmarks Tekniske Hojskole, Laboratiet for Koleteknik, Lyngby, Denmark (July 1978).

48. Claesson, J. and Johansson, M., "Continuous Heat Source Model for Ground Heat Storage", Swedish Council for Building Research, Doc. No. D34.1980, Stockholm (1980).

49. Andrews, J.W. and Metz, P.D., "Computer Simulation of Ground-Coupled Storage in a Series Assisted Heat Pump System", Proc. 1979 Int'l. Solar Energy Soc. Congr., Atlanta (May 1979).

50. Kusuda, T. and Achenbach, P.R., "Earth Temperature and Thermal Diffusivity at Selected Stations in the United States", ASHRAE Trans., 71, Part 1, pp. 61-75 (1965).

51. Metz, P.D., "Experimental Results from the First Year of Operation of the Solar Ground Coupling Research Facility at Brookhaven National Laboratory", Proc. of 2nd Int'l Conf. on Alternative Energy Sources, Miami Beach, FL, pp. 527-540 (December 1979).

52. Whitacre, G.R., et al., "A Convective Model for Subsurface Flow Around a Chilled Pipe", Battelle report to Canadian Arctic Gas Study Limited (October 31, 1974).

53. Ahmed, E.A., "Simulation of Simultaneous Heat and Moisture Transfer in Soils Heated by Buried Pipes", Ph.D. Thesis, Ohio State University (1980).

54. Slegel, D.L., "Transient Heat and Mass Transfer in Soils in the Vicinity of Heated Porous Pipes", Ph.D. Thesis, Oregon State University (1975).

55. Schroeder, C.N., "The Development of an Optimized Computer Simulation Model for Heat and Moisture Transfer in Soils", Ph.D. Thesis, Texas A&M (1974).

56. Letter from S. K. Fischer, Oak Ridge National Laboratory (February 19, 1981).

57. Bande, P., "Use of the Ground as a Cold Source for Heat Pump: Development of a Calculation Model", Nordic Symp. on Earth Source Heat Pumps, Goteborg, and personal communication (October 15-16, 1979).

58. Johansson, M. and Westman, K., "Dator Program for Studium av Temperatur Och Frysnmgs-fortoppi Mark Kring Kylrov Till Varmepump", Lundstechniska Hogskola, Rapport BKL 1979:9 and personal communication.

59. Morgensen, H.P., "Earth Heat Pump Systems", Talk at Symposium on Low Temperature Heat Storage, and personal communication.

60. Morgensen, H.P., "The Ground as a Heat Source for Heat Pumps -- Performance and Reactions", Paper E1-27, XV Int'l. Congr. of Refr., Venice (September 23-29, 1979).

61. Granryd, E.G., "Ground Source Systems in a Northern Climate", Paper E1-82, XV Int'l. Congr. of Refr., Venice (September 23-29, 1979).

62. Morgensen, H.P., "Experiences from Earth Heat Pumps in Sweden", Nordic Symp. on Earth Source Heat Pumps, Goteborg (October 15-16, 1979).

63. Neiss, J. and Winter, E.R.F., "Erdreich als Warmegelle", Elektowarme Int'l., Ed. A, 35 (1977)

64. Cube, V., "Erarbeitung Eines Optimierungsverfahrens Fur die Auslegung Von Erdboden schlangen als Warmequelle Fur Warmepumpun", Abschlußbericht BMFT-FB-T80-121, Forderungsnummer 03E4127A/ET58001A (August 1980).

65. Atkinson, C.H., "Ground Heat Source Heat Pumps", Report of work on Contract No. OSR77-00145 for the Div. of Bldg. Res., Nat'l. Res. Council of Canada, Acres Consulting Service Ltd., Niagara Falls, Ontario (June 1978).

66. Whitacre, G.R., et al., "Thermal Soil Behavior Model", Final Report to Gas Arctic/Northwest Project Study Group by Battelle-Columbus and E. W. Brooker and Assoc., Edmonton, Alberta (August 4, 1972).

67. Walker, W.R., et al., "Studies of Heat Transfer and Water Migration in Soils", Colorado State University Report DOE/CS/30139-T1 (April 1981).

68. Nievergeld, P.G.N., "Investigations on Using the Earth as a Heat Storage Medium and as a Heat Source for Heat Pumps", Nordic Cymp. on Earth Source Heat Pumps, Goteborg, and personal communication (October 15-16, 1979).

69. Fischer, R.D., "Models of Simultaneous Heat and Moisture Transfer in Soils", Battelle Report to Oak Ridge National Laboratory (August 9, 1981).

70. Personal communication with Battelle-Frankfurt.

71. Metz, P., "Ground Energy Coupling", U.S. DOE Heat Pump Integration Task Force Meeting (June 1981).

72. Personal communication with John Andrews, monitor of the E-Tech Ground-Coupling Program in the Southeastern U.S. sponsored by the U.S. DOE.

73. Ruhm, D., "Warmegewinn 30 Watt je Quadratmeter Sanitar - und Heizung stechnik", 3, pp. 177-182 (1980).

74. Depreter, M.A. and Geeraert, M.B., "L'utilisation du Sol et de Collecteurs Solaires non Vitre' Comme Source de Chalew Pew le Chauffage des Batiments par Pome a Chaleur", XI Joumees d'Etudes, Comite' Francais d' Electrothermie, Versailles (December 4-5, 1980).

75. Sunse (Sluveden), Sanitar - und Fleizungstecknile, No. 12, pp. 1112-1116 (1980).

76. Kersten, M.S., "Thermal Properties of Soils", Eng. Exp. Sta. Bul. No. 28, University of Minnesota, pp. 1-226 (June 1949).

77. Mickley, A.S., "The Thermal Conductivity of Moist Soil", AIEE Trans., 70, pp. 1789-1797 (1951).

78. Havens, J.A., "Heat and Moisture Conduction in Unsaturated Soils", NTIS PB-242 328, Report prepared at Arkansas University for Office of Water Research and Technology (June 1974).

79. Martin, M.A. and Black, W.Z., "Practical Aspects of Applying Soil Thermal Stability Measurements to the Rating of Underground Power Cables", paper presented at IEEE meeting, Atlanta, GA (February 1981).

80. de Vries, D.A., "The Thermal Conductivity of Granular Materials", Annexe 1952-1 Bulletin, Institute International du Froid, pp. 115-131 (1952).

81. de Vries, D.A., "Thermal Properties of Soils", Chapter in Physics of the Plant Environment, W.R. Van Wijk, Editor, North Holland Publishing Co., Amsterdam, Netherlands (1963).

82. Stickford, G.H., et al., "Thermal Conductivity Measurements Using the Line Source Probe Technique", paper presented at the 27th Instrumentation Symposium, Indianapolis, IN (April 1981).

83. Hartley, J.G. and Black, W.Z., "Minimization of Measurement Errors Involved in the Probe Method of Determining Soil Thermal Conductivity", ASME Trans., J. of Ht. Transfer, pp. 530-531 (August 1976).

84. Personal conversation with Phil Metz at Brookhaven National Laboratory and Vince Mei at Oak Ridge National Laboratory and the experience of Chalmers University at the Utby House in Sweden.

INTERNAL DISTRIBUTION

1. V. D. Baxter
2. R. S. Carlsmith
3. F. A. Creswick
4. R. C. DeVault
5. J. E. Dobson
6. R. D. Ellison
7-10. P. D. Fairchild
11. S. K. Fischer
12. W. Fulkerson
13. V. O. Haynes
14. P. Intemann
15. S. V. Kaye, Consultant
16. T. R. LaPorte, Consultant
17. R. N. McGill
18. V. C. Mei
19. J. W. Michel
20. R. E. Minturn
21. W. R. Mixon
22. L. I. Moss, Consultant
23. J. C. Moyers
24. E. A. Nephew
25. M. W. Russell, Consultant
26. W. H. Williams, Consultant
27-28. Central Research Library
29. Document Reference Section
30. Laboratory Records - RC
31-32. Laboratory Records Department
33. ORNL Patent Section

EXTERNAL DISTRIBUTION

34. Phil Albertson, Manager, Charles Machine Works, Inc., P.O. Box 66, Perry, OK 73077
35. C. H. Atkinson, Environmental Division, Acres Consulting Serv., Ltd., 5259 Dorchester Road, Niagara Falls, Ontario 12E G61
36. B. Backstrom, Chalmers University of Technology, Jordvarme Gruppen, S-41296, Goteborg, Sweden
37. Michael K. Bergman, Staff Scientist, American Public Power Assoc., 2301 M Street, N.W., Washington, DC 20037
38. W. Z. Black, Professor, School of Mech. Eng., GA Institute of Technology, Atlanta, GA 30332
39. Andrew L. Blackshaw, Manager, R&D, E-Tech, Inc., 3750 American Drive, Atlanta, GA 30341
40. James E. Bose, School of Technology, Oklahoma State University, Stillwater, OK 74078
41. David Cabot, President, Avondale Solar Corporation, P.O. Box 501, 44 Avondale Road, Westerly, RE 02891
42. James M. Calm, Project Manager, Heat Pump Development, Electric Power Res. Inst., 3412 Hillview Avenue, Palo Alto, CA 94303
43. Barry J. Dempsey, Dept. of Civil Engineering, University of Illinois, Urbana, IL 61801
44. R. J. Denny, Air-Conditioning & Refrigeration Institute, 1815 N. Fort Meyer Drive, Arlington, VA 22209
45. Richard Dougall, Dept. of Mechanical Engineering, University of Pittsburgh, Pittsburg, PA 15261
46. G. D. Duffy, Air Conditioning News, P.O. Box 2600, Troy, MI 48007
47. David G. Dutton, Vice President - Marketing, McElroy Manufacturing, Inc., P.O. Box 15580, Tulsa, OK 74112

48. John A. Edwards, North Carolina State University, Department of Mechanical and Aerospace Engineering, P.O. Box 5246, Raleigh, NC 27607
49. Don Ellis, Genesis Energy Systems, Div. of Hattersly & Sons, Inc., 3989 Mobil Avenue, Fort Wayne, IN 46896
50-54. Robert D. Fischer, Battelle Columbus Laboratories, 505 King Avenue, Columbus, OH 43201
55. R. J. Fiskum, Energy Conversion Equipment Branch, CE-113.2, Department of Energy, 1000 Independence Avenue S.W., Washington, DC 20585
56. Victor Goldschmidt, Ray W. Herrick Laboratories, Purdue University, W. Lafayette, IN 47907
57. E. Granryd, Dept. of Applied Thermodynamics and Refrigeration, Royal Institute of Technology, S-10044 Stockholm, Sweden
58. Robert M. Gregson, Vice President, Alten Northwest, 1134 Poplar Place, S., Seattle, WA 98144
59. G. C. Groff, Director, Research Division, Carrier Corporation, Carrier Parkway, Syracuse, NY 13201
60. Floyd Hayes, Thermal Systems, The Trane Company, 3600 Pammell Creek Road, LaCrosse, WI 54601
61. Mark R. Hogan, Manager, Westinghouse Electric Corporation, R&D Center, Purdue Industrial Res. Park, 1291 Cumberland Avenue, West Lafayette, IN 47906
62. Michael Hughes, Friedrich Air Conditioning & Refrigeration, 2007 Beechgrove Pl., Utica, NY 13507
63. Patrick J. Hughes, P.E., W. S. Fleming & Associates, Inc., 5802 Court Street Road, Syracuse, NY 13206
64. G. Hultmark, Secretary, Chalmers Univ. of Technology, Jordvarme Gruppen, S-41296, Goteborg, Sweden
65. Douglas Jardine, Kaman Sciences Corporation, 1500 Garden of the Gods Rd., Colorado Springs, CO 80907
66. William S. Johnson, P.E., University of Tennessee, Energy, Environment and Resources Center, Knoxville, TN 37916
67. W. A. Jury, Assoc. Professor of Soil Physics, Dept. of Soil & Environ. Sci., University of California, Riverside, CA 92521
68. Mark Kalman, E-Tech Incorporated, 3570 American Drive, Atlanta, GA 30341
69. Herbert Kaufman, ARCO Comfort Products Company, 1271 Avenue of the Americas, New York, NY 10020
70. Richard Kurtz, Naval-Base-Housing Engineering, Naval Civil Engineering Lab., Port Hueneme, CA 93043
71. Edward A. Kush, 65 Crystal Rock Ct., Middle Island, NY 11953
72. Arvo Lannus, Residential & Commercial Applications, Electric Power Research Inst., 3412 Hillview Avenue, P.O. Box 10412, Palo Alto, CA 94303
73. Terry R. Larson, Marketing Services Manager, PLEXCO, 3240 N. Manniheim Road, Franklin Park, IL 60131
74. Calvin D. MacCracken, Calmac Manufacturing Company, 150 South Van Brunt Street, Englewood, NJ 07631
75. Philip Metz, Brookhaven National Laboratory, Building 701, Upton, NY 11973
76. P. Munter, Teknologisk Institut, Gregersensvej, DK-2630 Tastrup, Denmark

77. Joseph P. Murphy, Director of Education and Training, Oasis Energy Systems, 4425 N. High Street, Columbus, OH 43214
78. Richard A. O'Neil, Niagara Mohawk Power Corporation, 300 Erie Blvd. West, Syracuse, NY 13202
79. Sven G. Oskarsson, Cantherm, 8089 Trans-Canada Hwy., St. Laurent, Quebec H4S 1S4
80. Jerald Parker, School of Mechanical & Aerospace Eng., Oklahoma State University, 218 Engineer North, Stillwater, OK 74078
81. James R. Partin, GeoSystems, Inc., 3623 N. Park Drive, Stillwater, OK 74074
82. M. Porsvig, Danish Geotechnical Inst., 1 Maglebjergvej, DK-2800 Lyngby, Denmark
83. J. Rizzuto, New York State Energy Research & Development Auth., Agency Building No. 2, Rockefeller Plaza, Albany, NY 12223
84. G. Rosenbald, Chalmers University of Technology, Jordvarme Gruppen, S-41296, Gotebörg, Sweden
85. J. D. Ryan, Energy Conversion Equipment Branch, CE-113.2, Department of Energy, 1000 Independence Avenue S.W., Washington, DC 20585
86. F. Schabkar, Graz University of Technology, Kopernikusgasse 24, A-8010 GRAZ, Austria
87. Ralph Schlichtig, P.E., Unconventional Heat and Power Sources, 11212 3rd Avenue, S., Seattle, WA 98168
88. A. H. Schroer, Sales Development Manager, Shell Chemical Company, Polybutylene Department, One Shell Plaza, P.O. Box 2463, Houston, TX 77002
89. Howard N. Shapiro, Dept. of Mech. Eng., Engineering Research Inst., Iowa State University, Ames, IA 50010
90. Graham Siegel, TVA Chattanooga, Research & Development, 1850 Commerce Union Bank Bldg., Chattanooga, TN 37401
91. Gary Skartvedt, American Heliothermal Corporation, Denver, CO 80222
92. Mason Somerville, Professor, Dept. of Mech. Eng., University of Arkansas, Fayetteville, AR 72701
93. Mario A. Sophocleous, Kansas Geological Survey, University of Kansas, Lawrence, KS 66044
94. Don Stephenson, National Research Council, Division of Buildings Res., Montreal Road, Ottawa, Canada KIA 0R6
95. Lee Sumner, Research Engineer, York Division, Borg-Warner Corporation, P.O. Box 1592, York, PA 17405
96. O. J. Svec, Geotechnical Section, Division of Building Research, National Research Council of, Canada, Ottawa, Ontario KIA 0R6
97. M. Keith Swinehart, Vanguard Plastics, Inc., 831 N. Vanguard Street, McPherson, KS 67460
98. Ralph Tilney, Alco Controls, 336 Chasselle, St. Louis, MO 63141
99. Jeffrey W. Wright, Engineering Consultant, Kansas Gas and Electric Co., Wichita, KS
100. Office of the Assistant Manager for Energy R&D, U.S. Department of Energy, Oak Ridge Operations, Oak Ridge, TN 37830

101-127. Technical Information Center, Department of Energy, P.O. Box 62, Oak Ridge, TN 37830