EFFECT OF BACKFILLING MATERIAL ON GROUND COIL PERFORMANCE

V.C. Mei, P.E., Ph.D.

ABSTRACT

Ground-coupled heat pump (GCHP) systems use the ground as low-grade solar energy storage medium. Their high potential for energy conservation has long been recognized. However, the effect of ground coil backfilling material has never been seriously analyzed for GCHP applications.

For the northern part of the U.S. where winter heating load dominates, variation in backfilling material can probably be ignored, because the soil adjacent to the ground coil (and any void) will be saturated for winter operation. It is not economically viable to add thermal backfill for relatively mild and short summer operation. For those areas where the summer cooling load dominates, the choice of a backfilling material becomes very important for the following reasons: (1) to minimize the contact resistance between coil and soil and (2) to maintain high thermal conductivity in the backfilling region even under very dry ground conditions. Both reasons involve moisture migration during ground coil summer heat rejection.

This paper presents a mathematical model to describe the operation of horizontal ground coils, which includes the effect of backfilling material. The model was validated with field experimental data, with overall error between calculated and measured total energy exchange between coil and ground of only 4.4% with the former on the conservative side.

Three different backfilling materials were analyzed: clay, sand, and a fluidized mixture used for underground cable backfilling. The calculated results indicated that backfilling material made a big difference in coil performance. The fluidized mixture dissipates 47% more heat than the clay and 23% more than the sand.

This model can be used to assess the effect of different kinds of backfilling materials. Improvements in coil performance versus cost of backfilling material can now be more realistically analyzed.

INTRODUCTION

Ground-coupled heat pump (GCHP) systems use ground as a low-grade solar energy storage medium. Their high efficiency has long been recognized. However, GCHPs are also considered suitable for winter heating only because of favorable ground conditions.

In the northern part of the U.S. where winter heating load dominates, backfilling material is probably not important. To add the additional cost of a selected thermal backfill for a relatively mild and short summer is not economically viable. For those areas where the summer cooling load is heavy, heat dissipation by the ground coil will cause the moisture to migrate away from the coil, which can result in increased contact resistance between the coil and soil and potentially dry out the soil around the coil. This problem has been rigorously studied for underground power cable heat dissipation (Adams and Baljet 1968; Mitchell et al. 1980; Radhakrishna

1981). Their basic solution is to find a suitable backfilling material to minimize the contact resistance and to maintain high ground thermal conductivity around the cable even under very dry ground conditions. For GCHPs, however, extremely conservative ground coil design seems to be the only solution so far.

Summer field experimental data from Tennessee on GCHPs (Johnson et al. 1985) indicated that soil thermal conductivity for clay backfilling, measured 1/2 inch and 6 inches (1.3 and 15 cm) away from the coil wall, had different values, with the former considerably smaller than the latter one. Similar results were obtained for sand backfilling (Johnson et al. 1985). This is a clear indication of increased contact resistance or soil dry-out or both.

This paper presents a mathematical model describing the operation of horizontal ground coils, which includes the effect of backfilling material. The model was solved numerically and was validated with field experimental data. Overall error between calculated and measured total energy exchange between coil and ground was 4.4%, with the former on the conservative side, after a 32-day simulation. Measured and calculated ground temperatures are also closely matched, within 2 F (1.1°C).

Three different backfilling materials were analyzed: clay, sand, and a fluidized mixture that is used for underground cable backfilling (Boggs et al. 1981). The calculated results indicated that backfilling material made a big difference in coil performance. The fluidized mixture dissipated 47% more heat than clay and 23% more heat than sand. These figures show that with the proper selection of backfilling material, the coil heat dissipation capacity can be drastically improved. This model can be used to assess different kinds of backfilling materials. The benefit of the improvement in ground coil performance versus the additional cost of backfilling material can now be realistically analyzed.

An easy-to-use computer code, based on the model, was written for personal computer application. This code will be very useful for ground coil design, or to compare the ground coil designs with other methods, where the selection of backfilling material is important.

MATHEMATICAL MODEL

The model is based on energy balances subject to the following assumptions:

1. The soil and backfilling material regions are homogeneous.

2. The thermal properties in the two regions are constant but not necessarily equal to each other.

3. The fluid temperature and velocity are uniform at any coil cross section.

4. The coil is buried deep enough that the distance between ground surface and coil can be considered as far field.

5. Heat transfer from the center of the coil to the ouside coil wall is axially symmetrical.

Assumptions 1 and 2 are true for ground coil winter operation only; they are not true for summer operation due to moisture migration. However, since moisture migration usually affects only a small region adjacent to the coil, it is assumed that the effect of soil moisture migration outside the backfilling region is very small. With the inclusion of a backfilling material region, assumptions 1 and 2 are then acceptable for coil summer operation. Assumption 3 is valid for large coil length-over-diameter ratios. Field experiments of Freund and Whitlow (1959) indicated that thermal penetration caused by coil operation was generally not more than 3 ft (1 m). Since coils are usually buried at least that deep, assumption 4 is also valid. Because the coil wall is usually very thin, assumption 5 is true when the fluid is well mixed.

With the above assumptions, the following operations can be derived for the system shown in Figure 1.

Heat exchange between fluid and coil inside wall:

$$-V \frac{\partial T_f}{\partial x} + \frac{2K_p}{r_0 \rho_f C_f} \frac{\partial T_p}{\partial r}\Big|_{r_0} = \frac{\partial T_f}{\partial t} \; ; \tag{1}$$

Heat transfer in the coil wall:

$$\frac{\partial^2 T_p}{\partial r^2} + \frac{1}{r}\frac{\partial T_p}{\partial r} = \frac{1}{\alpha_p}\frac{\partial T_p}{\partial t} \qquad (r_0 \le r \le r_1) \; ; \tag{2}$$

Heat transfer in the backfilling material:

$$\frac{\partial^2 T_b}{\partial r^2} + \frac{1}{r}\frac{\partial T_b}{\partial r} + \frac{1}{r^2}\frac{\partial^2 T_b}{\partial \theta^2} = \frac{1}{\alpha_b}\frac{\partial T_b}{\partial t} \qquad (r_1 \le r \le r_2) \; ; \tag{3}$$

Heat transfer in the soil:

$$\frac{\partial^2 T_s}{\partial r^2} + \frac{1}{r}\frac{\partial T_s}{\partial r} + \frac{1}{r^2}\frac{\partial^2 T_s}{\partial \theta^2} = \frac{1}{\alpha_s}\frac{\partial T_s}{\partial t} \qquad (r_2 \le r \le r_F) \; ; \tag{4}$$

where conductive heat transfer in the x direction in Equations 2, 3, and 4 is neglected because of low thermal conductivity values of plastic coil, backfilling material, and soil and long distance in the x direction.

Boundary conditions:

At $r = r_0$,

$$h(T_p - T_f)|_{r_0} = K_p \frac{\partial T_p}{\partial r}\Big|_{r_0} \; . \tag{5}$$

At $r = r_1$,

$$T_b = T_p; \tag{6}$$

$$2\pi K_p \frac{\partial T_p}{\partial r}\Big|_{r_1} = K_b \int_0^{2\pi} \frac{\partial T_b}{\partial r}\Big|_{r_1} d\theta \; . \tag{7}$$

At $r = r_2$,

$$T_s = T_b \; , \tag{8}$$

$$K_b \frac{\partial T_b}{\partial r}\Big|_{r_2,\theta} = K_s \frac{\partial T_s}{\partial r}\Big|_{r_2,\theta} \; . \tag{9}$$

Equations 6 through 9 have not included contact resistance, since one of the purposes of backfilling material is to minimize, or eliminate, contact resistance. However, if there exists a contact resistance, it will be very simple to include it in the model.

At $r = r_F$,

$$T_{sF} = TA - DT \times \exp\left(-Z\sqrt{\frac{\pi}{8766\alpha_s}}\right) \times \cos\left(\frac{2\pi t_0}{8766} - \phi - Z\sqrt{\frac{\pi}{8766\alpha_s}}\right) . \quad (10)$$

Equation 10 is Kusuda's Correlation (1965); however, it only provides approximate far field temperature calculation. If there exists a measured ground temperature profile at depths, such data should be used to replace Equation 10.

Initial conditions ($t = 0$):

$$\begin{aligned} T_f &= T_{fi}\ (x) \\ T_p &= T_{pi}\ (x,r) \\ T_b &= T_{bi}\ (x,r,\theta) \\ T_s &= T_{si}(x,r,\theta)\ , \end{aligned} \quad (11)$$

where T_{fi}, T_{pi}, T_{bi}, and T_{si} can be easily calculated by Equation 10 or from the ground temperature profile at depths if it is available.

Fluid inlet condition:

$$T_f\ (t,x=0) = T_{fo}(t)\ . \quad (12)$$

Equation 12 represents the heat pump operation. $T_{fo}(t)$ can be easily determined from the heat pump performance data if the inlet fluid temperature to heat pump (ground coil exit fluid temperature) and fluid rate are known.

The model described so far is for the ground coil with fluid circulation. During the "off" cycle period, the fluid velocity, V, in Equation 11 is zero. Since the fluid thermal capacity is very small, Equation 5 can be written in the form

$$T_f = T_p\ . \quad (13)$$

MODEL VALIDATION

The mathematical model was solved numerically. A finite difference computer code was written for personal computer application. The computer code was used to simulate the field experimental data (Johnson et al. 1985). The hourly ground coil fluid inlet temperature and far field temperature at 2-, 3-, 4-, and 10-ft (0.6-, 0.9-, 1.2- and 3.0-m) depths were provided. The ground far field temperature profile was calculated by linearly extrapolating [0 to 2 ft (0 to 0.6 m)] and interpolating among the four readings.

Figure 2 shows the position of thermocouples used to measure backfilled sand thermal conductivity during the field test, between points 1 and 2 and points 3 and 4. Table 1 (Johnson et al. 1985) shows the average values of thermal conductivity of sand measured for four months. It can be seen that the values from the coil wall (point 1) to point 2 are much smaller than those measured between points 3 and 4. This is a good indication that the sand near the coil is dried out. The thermal conductivity value of sand was taken as the measurement between points 3 and 4 in this study for two reasons: (1) contact resistance for sand should not exist (Svec 1983) and (2) for only 1/2 inch (1.3 cm) away from the coil, any error in measuring either the distance or temperatures will be amplified. Since the simulation went from June 4 to July 6, 1984, the July average value was used (June average values were not available), where the moisture migration had not started. Table 2 shows the measured thermal conductivities of clay, between 6 and 12 inches (152 and 305 mm) away from the coil wall, for a 9-hour continuous heat pump operation. The ninth-hour measurement was used in the simulation involving sand backfill near the coil and probably did not have the effects of contact resistance and moisture migration.

Figure 3 shows the thermocouple positions for the clay thermal conductivity measurement in an early field test (Johnson et al. 1985). Measurements were taken between points 1 and 2, 1 and 4, and 3 and 4. Table 3 (Johnson et al. 1985) shows the values measured. It can be seen that the measured values between points 1 and 2 and 1 and 4 are much smaller than between points 3 and 4. It is clear that there exists a contact resistance and a possible dried-out region between the soil and the coil wall. Since the region of interest is 3-in (7.6-cm) thick around the coil, the average value measured between points 1 and 2 and 1 and 4 was used for parametric study for clay backfill only. In other words, this K value for clay actually includes the contact resistance and the dried-out soil region.

The following list shows the input information for the model validation with sand backfill.

Coil length = 700.0 ft (213.4 m)

Coil burial depth = 4 ft (1.2 m)

Coil size = 0.69-in I.D. and 0.83-in O.D. (17.5-mm I.D. and 21.1-mm O.D.)

Coil material = polyethylene

Coil thermal conductivity = 0.266 Btu/h·ft·F (0.460 W/m·K)

Coil specific heat = 0.52 Btu/lbm·F (2.18 kJ/kg·K)

Fluid = water-methanol mixture (20% by weight)

Flow rate = 8.43 gpm (1.91 m^3/h)

Thermal conductivity of fluid = 0.203 Btu/h·ft·F (0.351 W/m·K)

Specific heat of fluid = 0.982 Btu/lbm·F (4.11 kJ/kg·K)

Backfilling material = sand

Sand thermal conductivity (coil wall to 3 inches (76 mm) from coil center) = 0.881 Btu/h·ft·F (1.525 W/m·K)

Specific heat of sand = 0.210 Btu/lbm·F (0.88 kJ/kg·K)

Density of sand = 108.2 lb/ft^3 (1733.7 kg/m^3)

Soil thermal conductivity (for region beyond 3 inches (76 mm) away from coil center) = 1.62 Btu/h·ft·F (2.80 W/m·K)

Soil specific heat = 0.4 Btu/lbm·F (1.676 kJ/kg·K)

Soil density = 93.08 lb/ft^3 (1491.4 kg/m^3)

The backfilled region is about 6 in (152.4 mm) square. For convenience it was assumed that the boundary of the backfilling region and soil is circular with a radius of 3 in (76 mm). This assumption will result in slightly conservative calculation.

A total of 32 days were simulated, from June 4 to July 6, 1984. Longer simulation periods were possible, but it was decided that a 32-day simulation would be long enough to provide a qualitative comparison and yet would not take too long on a small computer. Besides, monthly measured sand and soil thermal conductivity kept on changing (Johnson et al. 1985) due to soil moisture migration. Further modification of the computer code will be needed if the simulation is longer than one month to accommodate the changing thermal properties of soil and sand.

The heat pump hourly cyclic schedule was determined by the measured heat pump hourly power consumption divided by the heat pump power consumption when it was operated at steady state.

Figure 4 shows the comparison of measured and calculated daily energy exchange between coil and soil. The calculated values closely match the measured ones. Figure 5 shows the comparison of calculated and measured ground temperature profile at the coil burial depth. Again, the match is excellent. Figure 6 shows the calculated and measured cumulative energy exchange between coil and soil for 32 days. The calculated value, at the end of simulation, is only 4.4% off the measured one, on the conservative side. Figures 4, 5, and 6 indicate that the model predicts the measured results very well.

PARAMETRIC STUDY

Two other types of backfilling materials were studied: clay and a fluidized mixture. The clay was actually the soil dug up during the trenching process. The specific fluidized mixture (Boggs et al. 1981) is composed of a fine aggregate, coarse aggregate, cement or cement-based material, fluidizing component (e.g., fly ash or bentonite) and steel cuttings as the additive. The mixture is used to enhance the underground cable heat dissipation.

The thermal properties of the clay and the fluidized mixture are listed as follows:

	Clay	Fluidized Mixture
Thermal conductivity, Btu/h·ft·F (W/m·K)	0.463 (0.801)	1.926 (3.334)
Specific heat, Btu/lb·F (kJ/kg·K)	0.40 (1.68)	0.23 (0.96)
Density, lb/ft^3 (kg/m^3)	93.08 (1491.4)	139.36 (2223.0)

The thermal conductivity of clay backfilling is taken from Table 3. This value could have included the effects of contact resistance and moisture migration.

Figure 4 shows the comparison of the three backfilling materials on daily energy exchange between soil and coil. It is clear that the fluidized mixture performs far better than clay and sand. Figure 5 shows that when the thermal conductivity of the backfilling material increases, the calculated soil temperature increases due to more heat dissipation. Figure 6 shows the calculated cumulative energy exchange between soil and coil over a 32-day operation for three backfilling materials. The fluidized mixture dissipated 47% more heat than the clay and 23% more heat than the sand. This indicates that backfilling material does make a difference in ground coil performance.

DISCUSSION AND CONCLUSION

GCHPs are generally considered for winter heating only due to the favorable ground conditions. For summer operation, there exists the possible contact resistance and soil dry out around the coil, which could drastically cut down the coil's heat dissipation capacity. Sand has often been used as the backfilling material to reduce the contact resistance; however, sand cannot stop the moisture migration that could result in a dried-out region, even though this region is usually very small. A good thermal backfill, however, will reduce the effect of moisture migration due to the increase of soil heat transfer area. It should also eliminate, or minimize, the contact resistance, as well as maintain a high thermal conductivity even at very dry ground conditions. The effect of the thermal backfilling material is very difficult to analyze for GCHP application because the heat pump is not always running and the ground coil fluid temperature is quite low, usually not over 120 F (48.9°C). Using the approach adopted for underground power cable heat dissipation (Boggs et al. 1981) might result in overly conservative design, because the maximum allowable cable temperature is around 185 F (85°C), which is too high for GCHP application.

The mathematical model presented in this paper includes the effect of backfilling materials. The model has been solved numerically (Mei 1986) and is validated with the field experimental data to a very satisfactory degree. The calculated total heat dissipation is only 4.4% less than the measured dissipation over a 32-day period. The calculated ground temperatures also closely match the measured values.

The parametric study indicates that the fluidized mixture backfill dissipates 47% more heat than the clay and 23% more heat than the sand over a 32-day computer simulation. Backfilling material is clearly a very important factor in GCHP design. Thermal backfilling is usually ignored in GCHP because most systems are designed for winter heating application. For areas where summer cooling load is heavy, the selection of backfilling material could greatly affect the coil's heat dissipation capacity. This model can be used to assess the merit of different

types of backfilling materials. The improvement of GCHP performance versus the additional cost of such material can now be realistically analyzed.

NOMENCLATURE

C - specific heat
DT - one-half amplitude of annual surface temperature
h - convective heat transfer coefficient,
K - thermal conductivity
r - radius
T - temperature
TA - annual average ground surface temperature
t - time
t_o - time of the year, from Jan. 1, h
V - fluid velocity
x - distance along the ground coil
z - depth

Greek Letters

ρ - density
θ - angular direction, defined in Equations 3 and 4
ϕ - phase angle, radian
α - thermal diffusivity

Subscripts

0 - pipe inside wall
1 - pipe outside wall
2 - boundary between backfill and soil
b - backfilled region
f - fluid
i - initial
p - coil
s - soil region
F - far field

REFERENCES

Adams, J. I., and Baljet, A. F. 1968. "Thermal behaviour of cable backfill materials." IEEE Transactions on Power Apparatus and Systems, V PAS-87. N4, pp. 1149-1161.

Boggs, S. A., et al. eds. 1981. Underground cable thermal backfill. Toronto, Canada: Pergamon Press.

Freund, E. A., and Whitlow, G. S. 1959. "Earth source heat pumps: Characteristics, design and operation." J. Am. Inst. Electr. Engr., p. 540.

Johnson, W. S., et al. 1985. TECH House I horizontal coil ground coupled heat pump: 1983-84 annual performance. ORNL/Sub/81-7685/3&92, Oak Ridge National Laboratory, Oak Ridge, TN.

Kusuda, T., and Achenbach, P. R. 1965. "Earth temperature and thermal diffusivity at selected stations in the United States." ASHRAE Transactions, 71 (1), p. 61.

Mei, V. C., Horizontal ground-coil heat exchanger: theoretical and experimental analysis. ORNL/CON-193, Oak Ridge National Laboratory, Oak Ridge, TN.

Mitchell, J. M., et al. 1980. Backfill materials for underground power cables. Phase I, EPRI Report RP 784-2.

Radhakrishna, H. S. 1981. "Fluidized cable backfills." Symposium on Underground Cable Thermal Backfill, Sept. 17-18, 1981, Toronto, Canada.

Svec, O. J.; Goodrich, L. E.; and Palmer, J. H. L. 1983. "Heat transfer characteristics of in-ground heat exchangers." J. of Energy Res., Vol. 7, p. 263.

ACKNOWLEDGMENT

Research sponsored by the Office of Buildings and Community Systems, U.S. Department of Energy, under contract DE-AC05-84OR21400 with Martin Marietta Energy Systems, Inc.

TABLE 1
Average Monthly K Value of Sand (Johnson et al. 1985)

Month	Average Btu/h·ft·F (W/m·K)		Average moisture % saturation
	Point 1[a] to point 2[a]	Point 3[a] to point 4[a]	
July	0.643 (1.113)	0.881 (1.525)[b]	79.2
August	0.412 (0.714)	0.750 (1.298)	68.1
September	0.350 (0.606)	0.783 (1.256)	16.1
October	0.283 (0.490)	0.746 (1.291)	2.8

[a]From Figure 2.
[b]K values used in simulation.

TABLE 2
K Value of Clay[a,b] away from Coil Wall
(Johnson et al. 1985)

Hour	Measured between clay at 6 and 12 inches (125 and 305 mm) away from coil wall	
	Btu/h·ft·F	(W/m·K)
1	41.32	(71.52)
2	17.88	(30.95)
3	7.11	(12.30)
4	4.20	(7.27)
5	3.07	(5.31)
6	2.37	(4.11)
7	2.01	(3.48)
8	2.25	(3.09)
9	1.62	(2.81)

[a]Test performed on September 22, 1984.
[b]For clay region outside the backfill material.

TABLE 3
K Value of Clay[a,b] Close to Coil Wall (Johnson et al. 1985)
in MBtu/h·ft·F (W/m·K)

	Point 1[c] to point 2[c]	Point 1 to point 4[c]	Point 3 to point 4
Cooling	0.3249 (0.5624)[d]	0.6002 (1.0390)[d]	1.045 (1.809)
Heating	0.3570 (0.6180)	0.7111 (1.2310)	1.2622 (2.1850)

[a]Steady state tests performed in April 1984.
[b]For clay backfill region only. For region outside backfill material, see Table 2 for clay thermal conductivity.
[c]From Figure 3.
[d]Average values of 0.3249 and 0.6002 (0.5624 and 1.0390), or 0.4626 (0.8007), are used in parametric study.

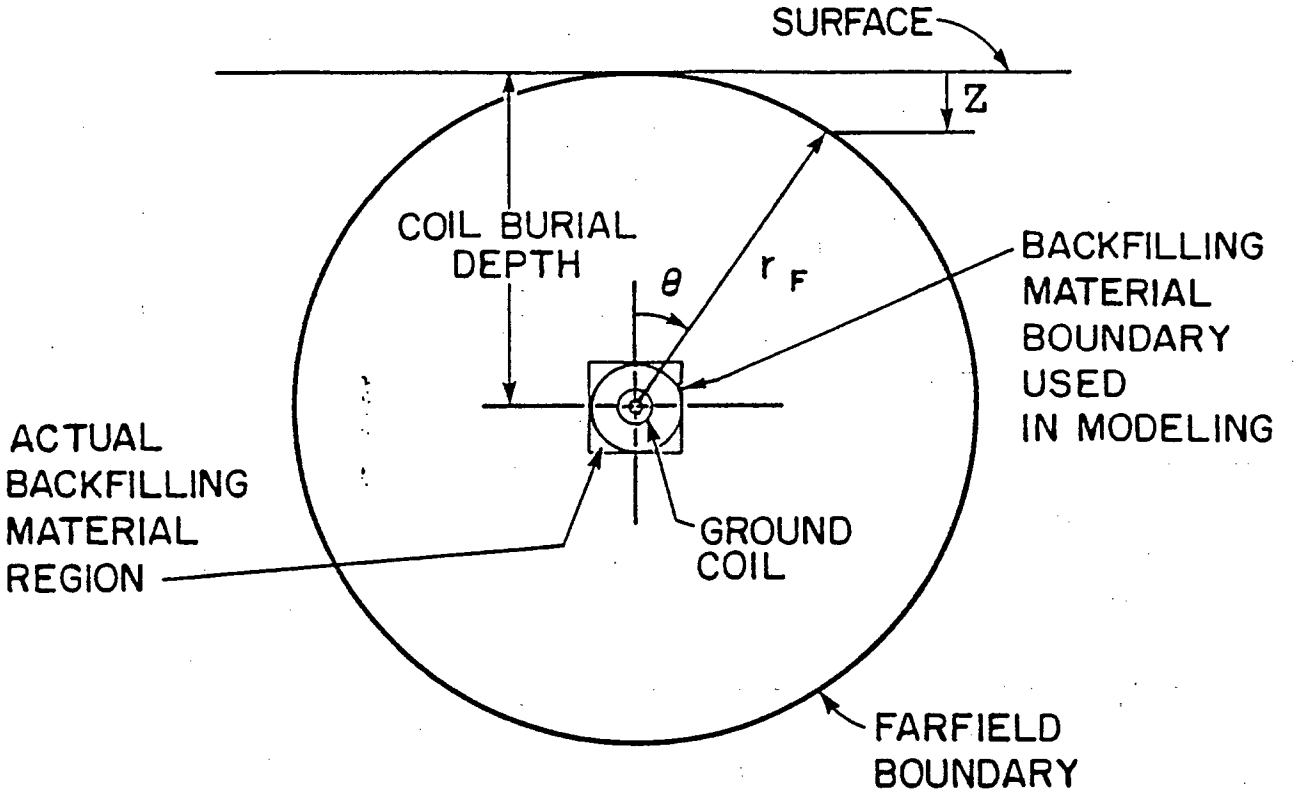

Figure 1. Schematic of ground coil

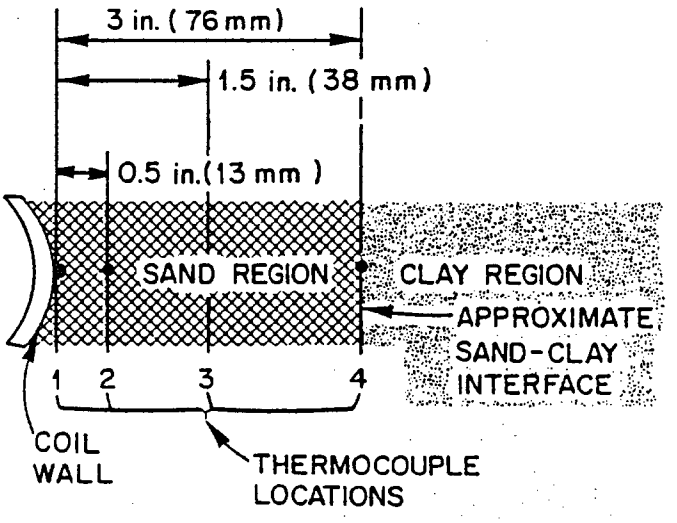

Figure 2. Sand backfilling and position of thermocouples

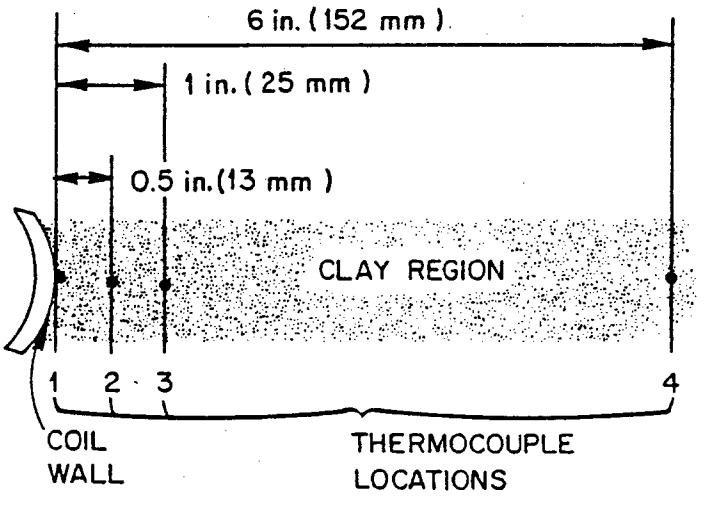

Figure 3. Clay backfilling and position of thermocouples

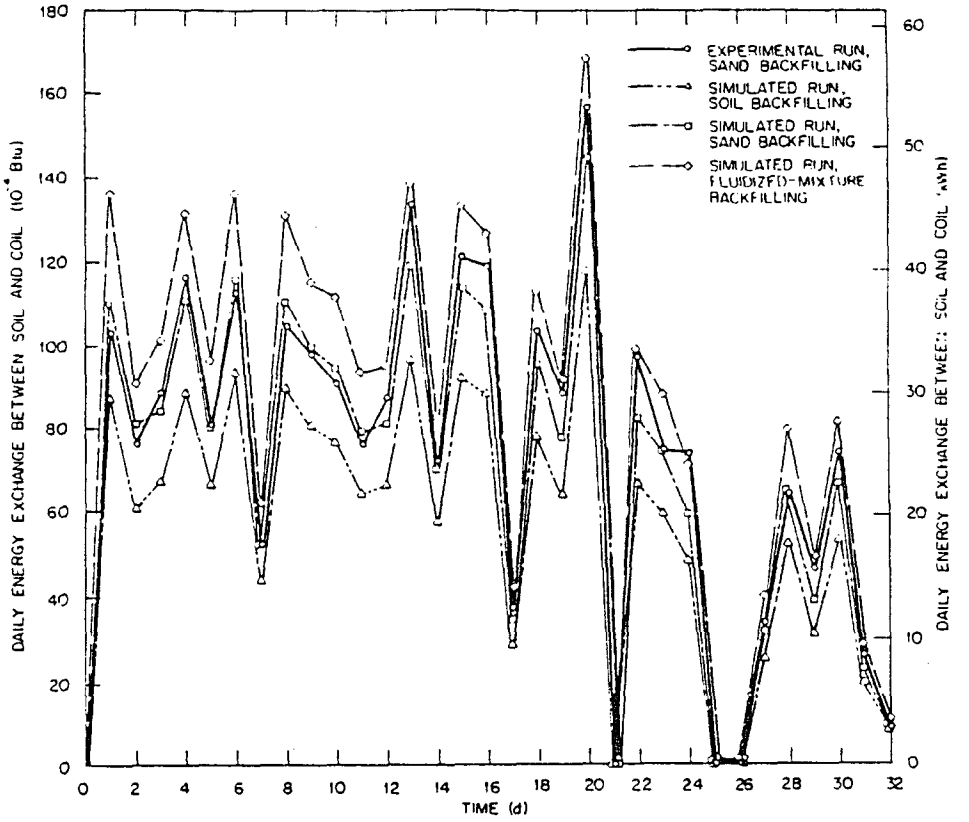

Figure 4. Comparison of measured (sand backfill) and calculated daily energy exchange between coil and soil for different backfilling materials

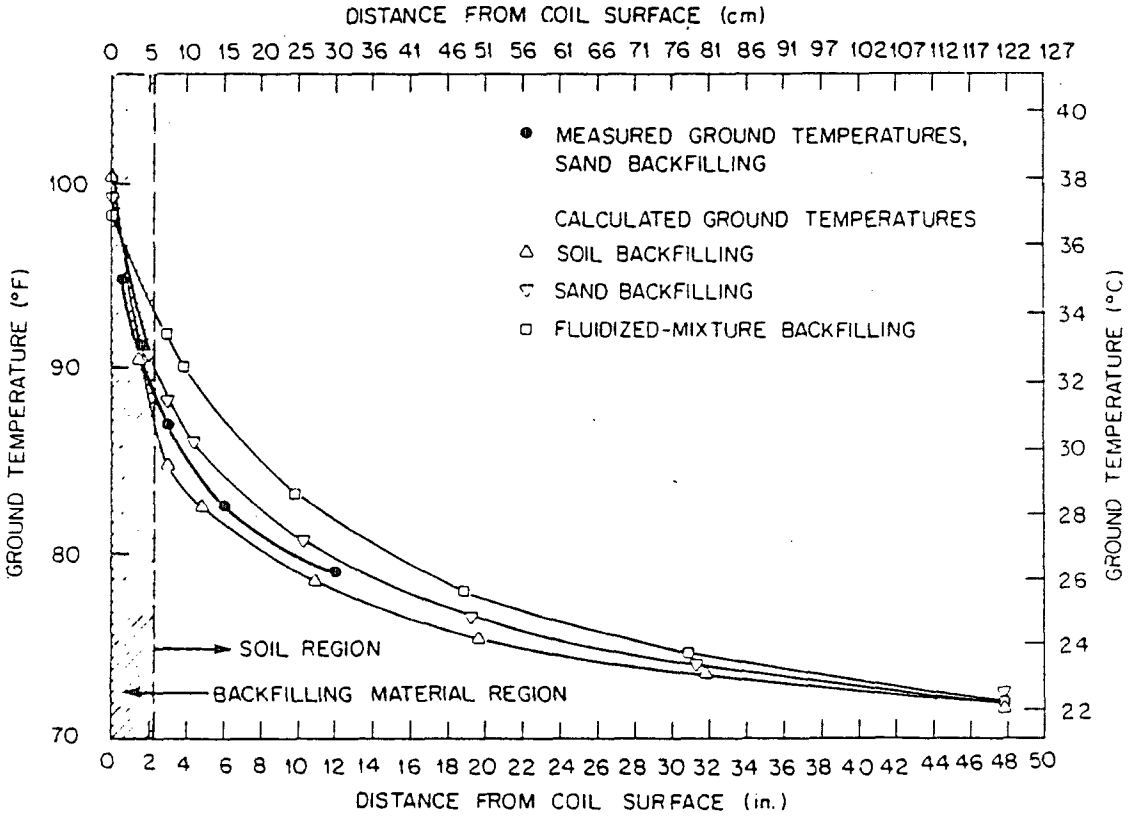

Figure 5. Comparison of calculated and measured ground temperatures after 32-day coil operation

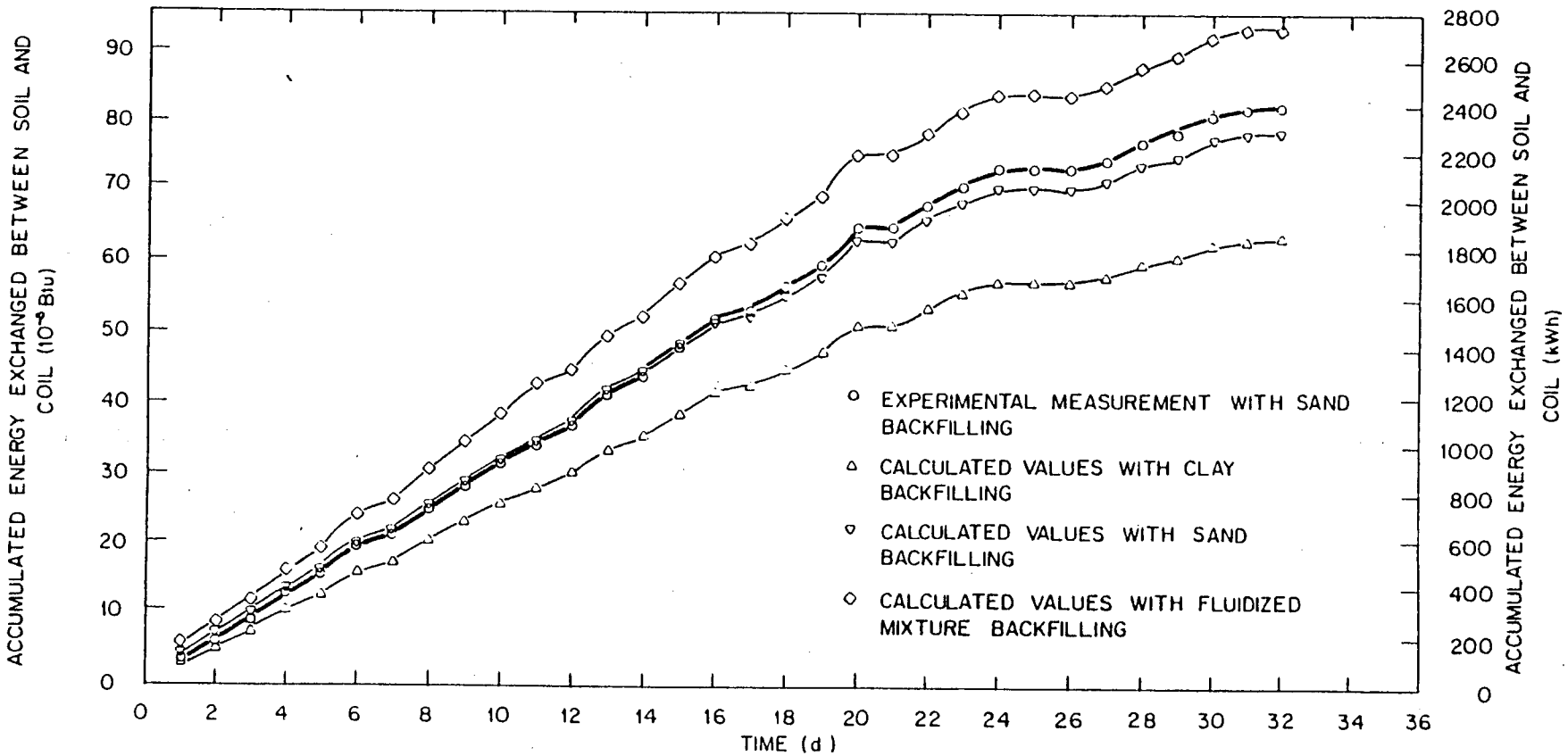

Figure 6. Comparison of calculated and measured cumulative energy exchange between coil and soil