# Development of Deemed Energy and Demand Savings for Residential Ground-Source Heat Pump Retrofits in the State of Texas

**John A. Shonder**
*Member ASHRAE*

**Patrick J. Hughes, P.E.**
*Member ASHRAE*

**Jeff Thornton**
*Member ASHRAE*

## ABSTRACT

*This report summarizes work to develop savings estimates for geothermal heat pump retrofits in residential applications in the four major climatic regions of Texas. Substantive Rule §25.181 of the Public Utility Commission of Texas requires electrical utilities in that state to achieve, by January 1, 2004, a minimum 10% reduction in demand growth through energy efficiency programs designed to reduce customers' purchased energy consumption and/or demand. The development of such programs requires estimates of deemed savings[1] for various energy conservation measures. Building on work performed during the evaluation of a residential geothermal heat pump retrofit project at a large U.S. Army facility in Louisiana, the authors modeled the performance of a complete neighborhood of 200 multifamily residences, comparing the annual energy consumption and peak demand of geothermal or ground-coupled heat pumps (GCHPs) and 10 SEER air-source heat pumps in Amarillo, Dallas/Fort Worth, Houston, and Corpus Christi. Three different GCHP efficiency levels were modeled, and the systems were modeled both with and without desuperheaters to supplement domestic hot water tanks. The medium- and high-efficiency GCHPs were found to provide significant energy and demand savings in all four cities.*

1. § 25.181 defines *deemed savings* as "a pre-determined, validated estimate of energy and peak demand savings attributable to an energy efficiency measure in a particular type of application that a utility may use instead of energy and peak demand savings determined through measurement and verification activities."

## BACKGROUND

In 1998, the authors completed the detailed evaluation of an energy savings performance contract (ESPC) at Fort Polk Joint Readiness Training Center in Leesville, Louisiana (Hughes and Shonder 1998). Under the terms of the ESPC, space conditioning systems in 4,003 residences were converted to geothermal or ground-coupled heat pumps (GCHPs). Prior to the implementation of the ESPC, 3,243 (or about 81%) of the residences were served by air-source heat pumps, while the remaining 760 had central air conditioners with natural gas forced-air furnaces. Other conservation measures installed under the ESPC included hot gas desuperheaters (to supplement hot water tank heating elements), compact fluorescent lighting, upgraded attic insulation, and low-flow shower heads.

The evaluation showed that for a typical year at the site, the retrofits resulted in savings of 25.8 million kWh (6440 kWh per residence), or about 33% of the total pre-retrofit electrical use. Peak electrical demand for a typical year was also reduced by about 7.6 MW (1.9 kW per residence), which is 43.5% of the pre-retrofit peak demand for a typical year. The project achieved a reduction in $CO_2$ emissions of about 22,400 tons per year.

In the course of the evaluation, the authors developed a detailed, hourly energy use model for all of the loads on an electrical feeder serving 200 multifamily residences in 46 separate buildings (this particular feeder served housing constructed in 1981, and the majority of the pre-retrofit air-source heat pumps were of the same vintage). The building load models were based on as-built construction plans, with lighting/appliance electrical use profiles determined from approximately one year of 15-minute-interval pre-retrofit end-use data collected from 20 residences at Fort Polk. Manu-

**John Shouder** is a staff member and **Patrick J. Hughes** is a program manager at Oak Ridge National Laboratory, Oak Ridge, Tenn. **Jeff Thornton** is a partner at Thermal Energy System Specialists, Madison, Wis.

THIS PREPRINT IS FOR DISCUSSION PURPOSES ONLY, FOR INCLUSION IN ASHRAE TRANSACTIONS 2002, V. 108, Pt. 1. Not to be reprinted in whole or in part without written permission of the American Society of Heating, Refrigerating and Air-Conditioning Engineers, Inc., 1791 Tullie Circle, NE, Atlanta, GA 30329. Opinions, findings, conclusions, or recommendations expressed in this paper are those of the author(s) and do not necessarily reflect the views of ASHRAE. Written questions and comments regarding this paper should be received at ASHRAE no later than **January 25, 2002**.

facturers' performance data for the 1981-vintage equipment were used to model the air-source heat pumps. To calibrate the simulation, the building models were adjusted (by changing occupancy schedules and parameters associated with outdoor air infiltration) until the sum of the electrical use predicted by the 46 building models matched the total electrical consumption on the feeder, as monitored at the site, to within 5%, on an annual basis.

Once the pre-retrofit feeder model was calibrated, the energy conservation measures—including the ground-source heat pumps—were implemented in the building models, and the complete feeder model was run once again to predict post-retrofit energy use. Comparison of the pre- and post-retrofit feeder models predicted an energy savings of 912,000 kWh per year. When the retrofits were installed and post-retrofit energy use monitored, actual energy savings from the feeder were determined to be 872,000 kWh. Put another way, the model was able to predict energy savings for this feeder to within a 5% variance from measured values. For this reason, we are confident that the same model, with suitable modifications, can be used to develop reliable deemed energy savings for ground-source heat pump retrofit projects in the state of Texas.

Obviously, no single model will be completely representative of the entire stock of family housing that exists in the state. However, there are a number of reasons why the Fort Polk feeder model is well suited to the development of deemed savings figures for GCHP retrofits in Texas. These reasons include the following:

1. Because the model is calibrated to field-monitored data collected from individual residences, it predicts the behavior of real buildings in response to actual weather and the living habits of real occupants. This contrasts with uncalibrated models, whose many parameters can be adjusted to give widely varying results.
2. The use of 46 buildings (with 200 total residences) captures more diversity in energy use than the model of a single residence.
3. The feeder model uses what is currently the most accurate method available to model the performance of vertical-bore ground heat exchangers for the GCHPs. The same algorithm has been used to calibrate commercially available software used to design commercial and residential GCHP systems.
4. Fort Polk's location in west central Louisiana, about 30 miles from the Texas state line, means that construction techniques and materials used for the 200 residences are similar to those used for housing in most regions of Texas.

## OBJECTIVE

The objective of this work was to develop estimates for the energy savings and peak demand reductions that can be achieved in Texas by replacing air-source heat pumps with ground-source heat pumps. The estimates were developed by driving the Fort Polk feeder model with typical meteorological year (TMY) weather data from Amarillo, Dallas/Fort Worth, Houston, and Corpus Christi. In each city, the feeder model was run a total of seven times. First, in order to estimate pre-retrofit energy consumption, the feeder model was run with a 10 SEER air-source heat pump, as specified by the Texas PUC. The air-source heat pumps were then replaced in turn by low-efficiency, medium-efficiency, and high-efficiency ground-source heat pumps. For each efficiency level, the total electrical use of the feeder was calculated both with and without hot gas desuperheaters supplementing the heating elements of the residences' hot water tanks. The total energy and demand savings were calculated for each case, compared to air-source heat pumps.

As stated above, no single model will be completely representative of the entire stock of family housing that exists in an entire state. The feeder modeled here is characteristic of military family housing. Residents consist of military personnel, their spouses, and children. At the time the electrical and water use data were collected, the total population of the 200 residences was approximately 600.

## DESCRIPTION OF THE FORT POLK FEEDER MODEL

Figure 1 presents a site plan for the electrical feeder designated Feeder 1 at Fort Polk. The area contains three unique building types: 12 buildings designated as type 1, a four-plex; 18 buildings designated type 2, a different four-plex; and 16 buildings of type 3, a five-plex. Figure 2 is a photograph of one of the five-plex residences.

Among the three building types, there are two unique apartment floor plans: apartment type A, containing 1142 $ft^2$ of living space, and apartment type B, containing 1114 $ft^2$. One apartment of type B exists in each of the five-plexes; the remaining apartments in both the five-plexes and the four-plexes are of type A. Thus, there are 184 apartments of type A and 16 apartments of type B, for a total of 227,952 square feet of living space on the feeder.

Beginning with as-built construction plans obtained from the site, an energy use model for each building on the feeder was developed using TRNSYS (Klein et al. 1996), a modular system simulation package in which the user specifies the components that constitute the system and the manner in which these components are interconnected. Driven by hourly weather data, occupancy schedules, and lighting/appliance use profiles, the simulation determines, during each 15-minute interval throughout the year, the conduction gains and losses to walls, windows, floors, and ceilings; internal gains (due to occupancy, thermal mass effects, and electrical appliances), infiltration loads, and solar gains. If the temperature of the space is such that heating or cooling is required (based on the comfort setpoints), the space conditioning device is also energized during the interval. The net heat gain or loss during the time interval determines the temperature of the space at the end of the interval, and the model proceeds in this manner to

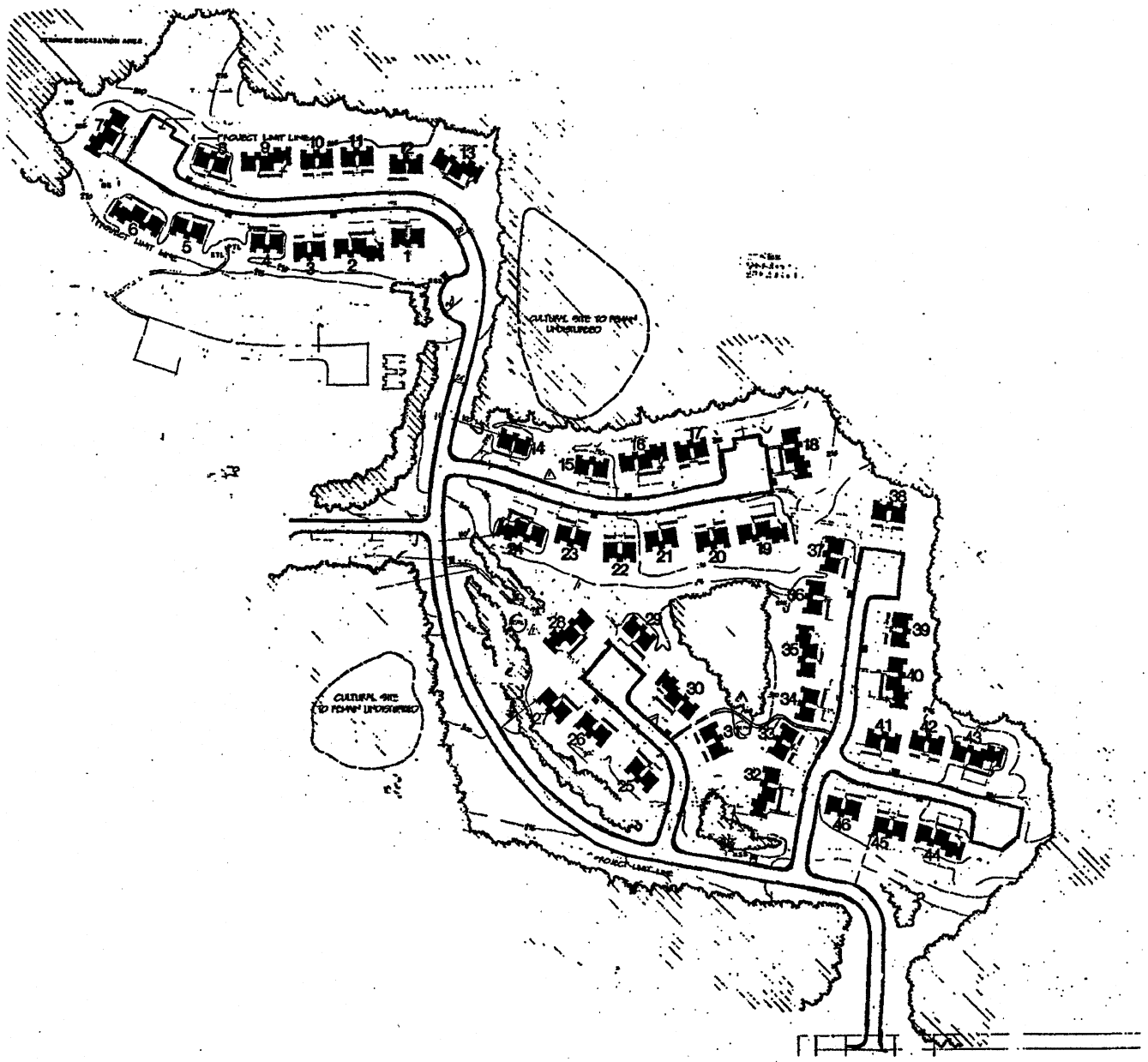

***Figure 1*** *Site map of buildings on the modeled feeder.*

simulate the behavior of the system for an entire year. A schematic of the simulation is presented in Figure 3.

The hourly electrical load for appliances and lighting in each residence was determined from end-use data collected at 15-minute intervals for a period of approximately one year from a sample of 20 residences at Fort Polk. Electrical use was normalized by floor space and then averaged over the 20 residences to develop an average profile. Since there was a significant difference in demand between weekdays and weekends, two separate profiles were developed. These are presented in Figure 4.

The energy use of the hot water tanks in the 20 residences was also collected at 15-minute intervals, and the data were used to develop hot water draw profiles. Because hot water use is assumed to be a function of number of occupants rather than floor area, hot water use was not normalized to floor area. The weekday and weekend hourly hot water draw for each residence is presented in Figure 5. Each residence was assumed to contain a 52-gallon, electrically heated hot water tank.

Standard residential occupancy schedules, the hot water draw, the lighting/appliance load developed from the monitored data, and performance maps of the air-source heat pumps allowed the energy use of the building to be calculated at 15-minute intervals.

The pre-retrofit electrical energy use for the feeder was also monitored directly at the site at 15-minute intervals for

about one year. A correlation of daily electrical use with daily average temperature was used to estimate the annual energy use of the feeder during a TMY at the site. The feeder model was then driven using TMY weather data, and parameters associated with the outdoor air infiltration of individual apartments were adjusted until the total annual energy use predicted by the model was within 5% of the site-monitored data as adjusted to a typical meteorological year. The results are presented in Figure 6. For a TMY, the model predicts total energy use of about 3 million kWh. When adjusted to the same TMY, the site-monitored pre-retrofit data predict an energy use of 2.87 million kWh. Very good agreement is also shown for daily energy use.

With the feeder model calibrated to the pre-retrofit data, the energy conservation measures were implemented in the model. The lighting load was reduced to account for fixture delamping and replacement of existing fixtures with CFLs, and the hot water load was reduced to account for the installation of low-flow shower heads. Finally, the air-source heat pump in each residence was replaced with a ground-source heat pump, which included a hot gas desuperheater to provide additional heat to the hot water tank.

For ground-source heat pump system simulations, the most important component model is the ground heat exchanger. Although several ground heat exchanger models were available, the duct ground heat storage model (Hellstrom et al. 1996) developed at the University of Lund, Sweden, was chosen for the study because it is well documented and vali-

***Figure 2*** *Typical multifamily residence on the modeled feeder.*

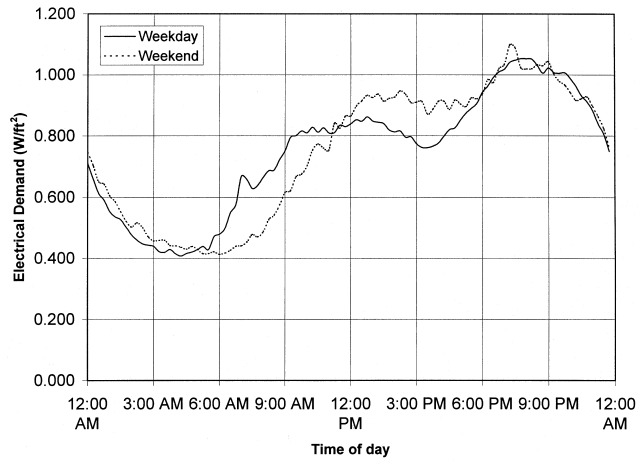


***Figure 4*** *Daily lighting/appliance electrical demand profile for weekdays and weekends.*

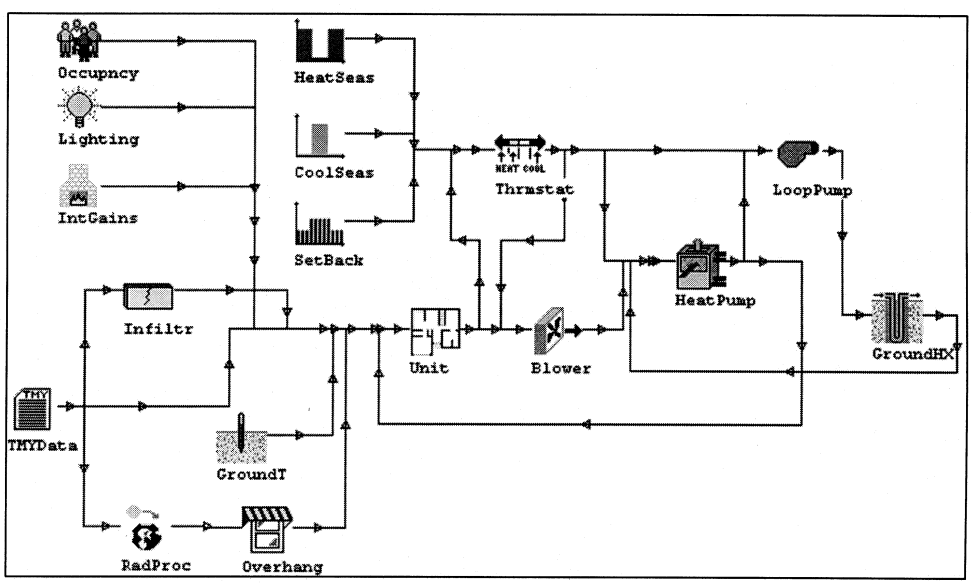


***Figure 3*** *Schematic of TRNSYS simulation of a residence. The simulation also includes a domestic hot water tank model (not shown) that is coupled to the GCHP system.*

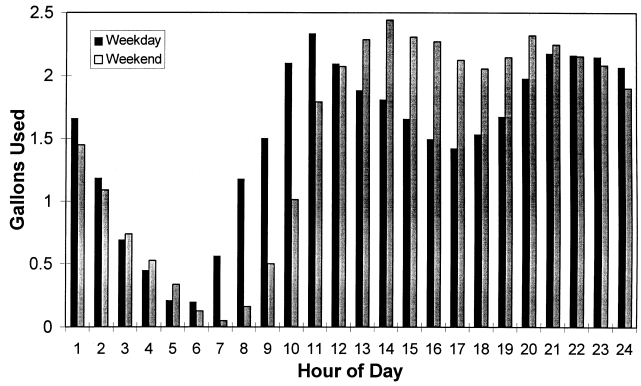


***Figure 5*** *Hourly hot water draw per residence.*

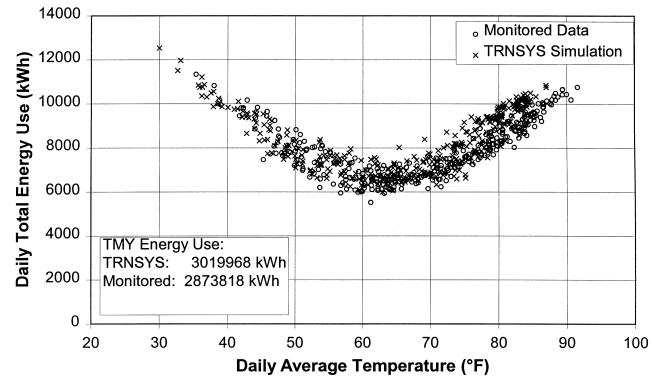


***Figure 6*** *Daily pre-retrofit energy use vs. daily average temperature, site-monitored and calibrated simulation.*

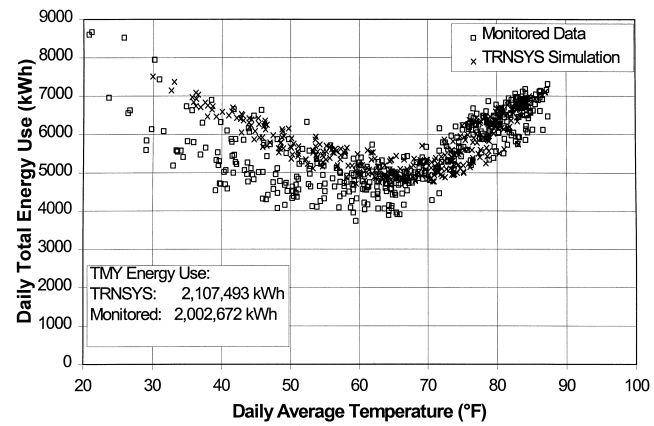


***Figure 7*** *Total daily post-retrofit electrical energy use vs. daily average temperature for the Fort Polk Feeder, site-monitored and simulated by TRNSYS model.*

dated and considers multi-bore interactions and long-term (multi-year) effects. The same model has been used with excellent results to benchmark and compare commercially available ground heat exchanger design software (Shonder et al. 1999; Shonder et al. 2000). Since soil thermal properties (undisturbed temperature and thermal conductivity) have a large impact on ground heat exchanger performance, data collected from a pilot installation of a GCHP at Fort Polk were used to calibrate soil thermal parameters in the heat exchanger model. Using building load information and the soil properties, a vertical-bore heat exchanger array was designed for each residence.

The feeder model was run once again with the ground-source heat pumps and the other retrofits in place. The model indicated that during a TMY, the residences would consume a total of about 2.1 million kWh in electrical energy. Post-retrofit electrical energy use for the entire feeder, collected for approximately one year, was available to test this prediction. A correlation of daily electrical use with daily average temperature was used to normalize the site-monitored data to the TMY for the site. Analysis of the data indicated that during a typical year, the residences on the feeder would use about 2.0 million kWh in electrical energy. The agreement between the model and the site-monitored data is within 2%.

A comparison of the monitored and predicted energy use for the feeder is presented in Figure 7. Very good agreement is evident for daily energy use as well as annual energy use. The divergence for the low-temperature data is due to the fact that at the beginning of construction, so-called "dummy" thermostats with fixed setpoints were installed as an additional energy conservation measure. Because of complaints from occupants, however, these were replaced in mid-year with fully adjustable thermostats. The site-monitored data reflect the two different setpoint conditions during the winter of the post-retrofit period. Fortunately, because the winter season at Fort Polk is so short, this discrepancy turns out to have only a small effect on the annual comparison.

## MODELING THE FEEDER IN TEXAS

Since the feeder model predicted the energy savings at Fort Polk with very good accuracy, it was assumed that the same model could be used to estimate the savings of similar retrofit projects in other locations, using appropriate soil thermal parameters and weather data. Accordingly, we proposed to develop savings estimates for the use of ground-source heat pumps in four cities that effectively define the range of climates experienced in Texas: Amarillo, Dallas/Fort Worth, Houston, and Corpus Christi. The sections below detail the weather, soil thermal properties, building design, and pre- and post-retrofit space conditioning equipment used to model the feeder in each of the four cities.

### Local Weather and Soil Characteristics

Pre- and post-retrofit energy use models were driven by TMY-2 weather data files corresponding to each of the four

different cities. A TMY-2 weather file for a given location is based on a statistical analysis of 30 years of weather data (Marion and Urban 1995). Each month in the file represents an actual month of recorded weather for that location, intended to be the most typical of the 30 months analyzed. The files include ambient temperature, relative humidity, incident solar radiation, and wind speed values at hourly increments for a year. The hourly TMY-2 data files were expanded to 15-minute increments through linear interpolation in order to conform with the 15-minute time increment of the TRNSYS simulation. Incident solar radiation on each of the exterior surfaces of the buildings was processed and subject to overhang and wingwall shading calculations.

While TMY-2 weather files were available for each of the four cities, soil thermal conductivities—which depend on local geology and groundwater flow—were not. In general, soil properties vary considerably across a given region, and "typical" soil thermal conductivities are not available for any location in the United States. It is for this reason that thermal properties are often measured at the project site, with one or more short-term in situ tests. An individual familiar with the design of ground-source heat pumps in the state of Texas confirmed that thermal conductivities vary widely throughout the state (Tinkler 2000), ranging from approximately 0.9 to 1.8 Btu/h·ft·°F depending on the characteristics of the subsurface geology.

Fortunately, soil thermal conductivity has a very small impact on the energy consumption of a properly designed GCHP system. Given two buildings with identical heating and cooling loads—one in a location with high soil thermal conductivity and one in a location with low soil conductivity—the low-conductivity soil will obviously require a larger borefield than the high-conductivity soil. But if both borefields are designed to limit the maximum water temperature to the same value, then the entering water temperature to the heat pumps in both buildings will be about the same throughout the year. All things being equal, entering water temperature determines the efficiency of the heat pumps, so the heat pumps in both buildings will use about the same amount of energy. The larger borefield may require slightly more energy for pumping, but because a well-designed GCHP system uses less than 15% of total energy use for pumping, the difference in annual energy use will be small.

In the absence of more specific information, it was decided to use thermal conductivities of 1.2 Btu/h·ft·°F for Houston and Corpus Christi and 1.4 Btu/h·ft·°F for Amarillo and Dallas/Fort Worth. Table 1 summarizes the soil thermal conductivities and deep earth temperatures used for the simulations in the four locations.

**TABLE 1**
**Soil Properties for the Four Cities**

| City | Soil Thermal Conductivity (Btu/h·ft·°F) | Deep Earth Temperature (°F) |
|---|---|---|
| Corpus Christi | 1.2 | 71 |
| Houston | 1.2 | 71 |
| Dallas/Ft. Worth | 1.4 | 68 |
| Amarillo | 1.4 | 62 |

**TABLE 2**
**R-Values of Building Surfaces**

| Surface | R-value ($ft^2 \cdot °F \cdot h/Btu$) |
|---|---|
| Roof | 3.12 |
| Ceiling | 39.16 |
| Underside of roof | 2.51 |
| Unconditioned area ceiling | 2.45 |
| Between apartments (L/R) | 11.88 |
| Between apartments (up/down) | 15.95 |
| Between unconditioned spaces | 11.03 |
| Exterior wall (stucco) | 10.77 |
| Exterior wall (lap siding) | 10.92 |
| Doors | 2.75 |
| Interior partitions | 2.91 |
| Exterior wall—unconditioned space | 2.65 |
| Floor | 3.42 |
| Double-pane windows | 2.10 |

## Building Characteristics

The TRNSYS simulation model for each building was developed from as-built construction drawings, which include the dimensions and materials used to construct walls, floors, ceilings, windows, and doors. Table 2 provides the R-values of all surfaces in the buildings, as calculated from the thermal properties of the construction materials. These values correspond to the pre-retrofit construction at Fort Polk (i.e., the buildings as they existed before any energy conservation measures were installed). Setpoints were assumed to be 78°F in cooling and 70°F in heating, as specified by the PUC.

Electrical use for lighting and other appliances was assumed to be the same as in the pre-retrofit case at Fort Polk. Each residence was assumed to contain a 52-gallon hot water tank, with hot water draw also as in the Fort Polk pre-retrofit case.

## Pre-Retrofit (Air-Source) Space Conditioning Equipment

The PUC specified the SEER of the existing air-source equipment to be 10.0. Accordingly, in each of the four locations, the pre-retrofit case was modeled by equipping each apartment with an air-source heat pump, selected from the product line of a major equipment manufacturer. The nominal cooling capacity of the selected model was 1.5 tons, with an

SEER of 10.0. Catalog performance data were used to model the heat pump.

In Corpus Christi, Houston, and Dallas/Fort Worth, the heat pumps were modeled with two-stage supplemental electric resistance heating elements. The first stage of 5 kW energizes when space temperature falls below 67°F; when space temperature falls below 64°F, the second 5-kW element is energized.

The city of Amarillo has a significant heating requirement. At the request of the PUC, supplemental heating for residences in that city was assumed to be supplied by a 36,000-Btu natural gas furnace rather than resistance heat. Since the study was concerned with electrical use only, natural gas use was not totaled.

### Post-Retrofit (Ground-Source) Space Conditioning Equipment

For the post-retrofit model, the air-source heat pump in each residence was replaced with a ground-source heat pump. Because the energy savings depends on efficiency of the equipment installed, three representative ground-source heat pumps were chosen: a low-efficiency model, a medium-efficiency model, and a high-efficiency model.

Comparing the performance of heat pumps from different manufacturers is somewhat problematic because, until recently, equipment could be rated by any of three different Air Conditioning and Refrigeration Institute (ARI) standards. In January 2000, ARI adopted the single standard, ISO/ARI 13256-1 (ISO 1998). Unfortunately, not all manufacturers have made the transition, and most product literature still references one of the previous ARI standards. For consistency, the EER ratings of the three heat pumps used in this study were all interpolated to the ISO/ARI 13256-1 rating condition of 77°F entering water temperature.

For the low-efficiency GCHP, performance data from a model with EER of about 12.4 were used. The medium-efficiency model used performance data from a GCHP with EER of approximately 16.8 at the ISO rating condition. Finally, to model the high-efficiency GCHP, performance data from an 18.3 EER model were used. Table 3 presents the cooling capacity, power draw, and EER of the three heat pumps, interpolated to 77°F entering water temperature.

It should be noted that the three modeled GCHPs have slightly different rated capacities (nominally, 19,000, 21,000, and 22,000 Btu/h for the low-, medium-, and high-efficiency heat pumps, respectively). Since the objective here was to determine the effect of efficiency on energy savings, the heat pumps were chosen on the basis of their EER, not their capacity. As with EER, different manufacturers rate the capacity of their equipment at different conditions, and no two machines will have the same capacity as a function of entering water temperature. In an actual residence, installing a heat pump with excess capacity may result in short cycling and humidity control problems, which, in turn, could affect energy use. Nevertheless, because the difference in capacity between the low- and high-efficiency models for this study is only 10%, any differences in energy consumption due to this effect are likely to be small.

Manufacturers' performance data for ground-source heat pumps include the energy use of the fan but not that of the fluid circulating pump. For this study, the instantaneous power draw of the pump is assumed to be 220 W, which is the value measured at Fort Polk.

In each post-retrofit case, energy use was calculated both with and without the use of a hot gas desuperheater. By rejecting waste heat from the compressor to the residence's hot water tank, a desuperheater reduces the electrical energy consumed by the tank heating elements in providing hot water for the occupants. In the case of a ground-source heat pump, a desuperheater has the additional benefit of reducing the amount of heat rejected to the ground. When heat is rejected to the hot water tank, water circulates through the ground heat exchanger at a somewhat lower temperature, and the heat pump operates more efficiently. The simulation model for each residence includes a detailed representation of the domestic hot water tank, heated by both the desuperheater and the tank elements.

## RESULTS

The results of the study are presented by city in Tables 3 through 6. Annual electrical energy savings are provided in kWh per $ft^2$ (assuming 227,952 $ft^2$ of living space on the feeder) and in kWh per ton of replaced cooling capacity (the pre-retrofit feeder in each of the four cities included a total of 300 tons of capacity). When desuperheaters are included, the annual energy savings range from 0.15 kWh/$ft^2$ for low-efficiency GCHPs in Corpus Christi to 2.30 kWh/ $ft^2$ for high-efficiency GCHPs in Amarillo.

Without desuperheaters, the low-efficiency GCHP uses more energy than the 10 SEER air-source heat pump in Corpus Christi, Houston, and Dallas/Ft. Worth (this is shown as a negative savings in the tables). The highest savings without desuperheaters—1.5 kWh/ $ft^2$—occurs in Amarillo using high-efficiency GCHPs.

For the purposes of this study, the PUC specified peak electrical demand as the maximum demand occurring during the "on-peak period," defined as Monday through Friday from May 1 through September 30, between the hours of 1 p.m. and 7 p.m. The model determines electrical demand by totaling the feeder electrical use in each hour. Depending on load diversity, using a one-hour interval may give a lower demand estimate than the 15-minute interval typically used by electrical utilities to calculate demand charge. With 200 separate buildings, the feeder model does include significant load diversity, so the error associated with using a one-hour time interval is likely to be small.

It should be noted that the different cooling capacities of the three modeled GCHPs and the air-source heat pump may affect the accuracy of the demand savings calculations. The demand savings presented here reflect our inference that over-

## TABLE 3
## Annual Energy and Demand Savings of Replacing 10 SEER Air-Source Heat Pumps with Low, Medium, and High Efficiency GCHPs in Corpus Christi, with and without Desuperheaters

| Corpus Christi—With Desuperheater | | | | |
|---|---|---|---|---|
| GCHP Efficiency | Energy Savings | | Demand Savings | |
| | (kWh/ft$^2$) | (kWh/ton) | (W/ft$^2$) | (kW/ton) |
| Low (12.4 EER) | 0.15 | 113 | –0.14 | –0.11 |
| Medium (16.8 EER) | 1.59 | 1210 | 0.74 | 0.57 |
| High (18.3 EER) | 1.95 | 1480 | 0.87 | 0.66 |
| **Corpus Christi—Without Desuperheater** | | | | |
| Low (12.4 EER) | –1.16 | –883 | –0.56 | –0.42 |
| Medium (16.8 EER) | 0.51 | 389 | 0.17 | 0.13 |
| High (18.3 EER) | 0.80 | 607 | 0.33 | 0.25 |

## TABLE 4
## Annual Energy and Demand Savings of Replacing 10 SEER Air-Source Heat Pumps with Low, Medium, and High Efficiency GCHPs in Houston, with and without Desuperheaters

| Houston—With Desuperheaters | | | | |
|---|---|---|---|---|
| | Energy Savings | | Demand Savings | |
| GCHP Efficiency | (kWh/ft$^2$) | (kWh/ton) | (W/ft$^2$) | (kW/ton) |
| Low (12.4 EER) | 0.28 | 210 | –0.06 | –0.05 |
| Medium (16.8 EER) | 1.62 | 1229 | 0.79 | 0.60 |
| High (18.3 EER) | 1.89 | 1438 | 0.83 | 0.63 |
| **Houston—Without Desuperheaters** | | | | |
| Low (12.4 EER) | –1.02 | –772 | –0.56 | –0.43 |
| Medium (16.8 EER) | 0.55 | 417 | 0.14 | 0.11 |
| High (18.3 EER) | 0.85 | 646 | 0.37 | 0.28 |

## TABLE 5
## Annual Energy and Demand Savings of Replacing 10 SEER Air-Source Heat Pumps with Low, Medium, and High Efficiency GCHPs in Dallas/Fort Worth, with and without Desuperheaters

| Dallas/Ft. Worth—With Desuperheaters | | | | |
|---|---|---|---|---|
| | Energy Savings | | Demand Savings | |
| GCHP Efficiency | (kWh/ft$^2$) | (kWh/ton) | (W/ft$^2$) | (kW/ton) |
| Low (12.4 EER) | 0.31 | 237 | –0.03 | –0.02 |
| Medium (16.8 EER) | 1.65 | 1255 | 0.76 | 0.58 |
| High (18.3 EER) | 2.03 | 1545 | 0.93 | 0.70 |
| **Dallas/Ft. Worth—Without Desuperheaters** | | | | |
| Low (12.4 EER) | –0.93 | –706 | –0.45 | –0.34 |
| Medium (16.8 EER) | 0.61 | 460 | 0.13 | 0.10 |
| High (18.3 EER) | 1.00 | 758 | 0.44 | 0.34 |

**TABLE 6**
**Annual Energy and Demand Savings of Replacing 10 SEER Air-Source Heat Pumps with Low, Medium, and High Efficiency GCHPs in Amarillo, with and without Desuperheaters**

| | Energy Savings | | Demand Savings | |
|---|---|---|---|---|
| GCHP Efficiency | (kWh/ft$^2$) | (kWh/ton) | (W/ft$^2$) | (kW/ton) |
| **Amarillo—With Desuperheaters** | | | | |
| Low (12.4 EER) | 1.06 | 804 | 0.07 | 0.06 |
| Medium (16.8 EER) | 1.77 | 1346 | 0.71 | 0.54 |
| High (18.3 EER) | 2.30 | 1750 | 0.84 | 0.64 |
| **Amarillo—Without Desuperheaters** | | | | |
| Low (12.4 EER) | 0.12 | 92 | –0.43 | –0.32 |
| Medium (16.8 EER) | 0.96 | 732 | 0.08 | 0.06 |
| High (18.3 EER) | 1.50 | 1140 | 0.27 | 0.21 |

sizing is inherent in conventional design load calculations. This oversizing means that the base case, 300 tons of standard air-source heat pump equipment, satisfies the cooling loads on the peak day (which may be hotter than the design day) without simultaneous, continuous operation of all units on the feeder. Because load diversity also occurs in the simulations when cooling loads are met by the higher efficiency, higher capacity GCHP equipment, we are confident that the demand reductions are representative of the reductions that would be seen in actual housing when replacing air-source heat pumps with GCHPs.

Tables 3 though 6 present demand savings in W/ft$^2$ and kW/ton of replaced capacity. The results show that the low-efficiency GCHP causes higher electrical demand than the air-source heat pump in almost every case, despite the fact that it has energy savings in some situations. The largest demand savings occurs with the high-efficiency GCHPs in Corpus Christi, where a 0.87 W/ft$^2$ is seen.

It is of interest to compare the energy and demand savings estimates for the four Texas cities with the savings that actually occurred on the modeled feeder at Fort Polk. For a TMY, the monitored Fort Polk data indicated that energy savings would be about 2.82 kWh/ft$^2$, or about 2144 kWh per ton of replaced equipment. Demand savings at Fort Polk were measured at 0.85 W/ft$^2$ or 0.65 kW/ton. These figures are generally higher than the estimates presented here because the retrofits at Fort Polk included lighting and insulation upgrades and because the pre-retrofit air-source heat pumps were of lower efficiency. Climatic differences are also a factor.

## CONCLUSIONS

A feeder containing 200 residences in 46 buildings was modeled in four Texas cities to determine the energy and demand savings of replacing 10.0 SEER air-source heat pumps with low-, medium-, and high-efficiency ground-source heat pumps, both with and without the use of hot gas desuperheaters to supplement hot water heating. With the results, second order equations were developed to estimate energy and demand savings based on the EER of the GCHPs installed in each city. These equations can be used to establish deemed savings for residential GCHP retrofit projects in various regions of Texas based on the location of the retrofit and the performance of the retrofit equipment installed.

The results of the study indicate that significant savings can be achieved with medium- to high-efficiency GCHPs but that some lower-efficiency models may result in higher demand and/or higher electrical energy use when replacing a 10.0 SEER air-source heat pump. For this reason, it is recommended that the Texas PUC establish some minimum efficiency criteria for qualifying GCHPs. For example, the U.S. Environmental Protection Agency awards an “Energy Star” rating to GCHPs with a minimum EER of 13.0.

## REFERENCES


Hellstrom G., L. Mazzarella, and D. Pahud. 1996. Duct ground heat storage model. Lund-DST. TRNSYS 13.1 Version. Department of Mathematical Physics, University of Lund, Sweden.

Hughes, P.J.,and J.A. Shonder. 1998. The evaluation of a 4000-home geothermal heat pump retrofit at Fort Polk, Louisiana: Final Report, ORNL/CON-460.

ISO. 1998. ISO 13256-1:1998: *Water-source heat pumps—Testing and rating for performance—Part 1: Water-to-air and brine-to-air heat pumps*. International Standards Organization.

Klein S.A., et. al. 1996. *TRNSYS manual: A transient simulation program*. Version 14.2 for Windows. Solar Energy Laboratory, University of Wisconsin.

Marion, W., and K. Urban. 1995. *User's manual for TMY2s (Typical Meteorological Years)*. Golden, Colo.: National Renewable Energy Laboratory.

Shonder J.A., V.D. Baxter, J.W. Thornton, and P. Hughes. 1999. A new comparison of vertical ground heat exchanger design methods for residential applications. *ASHRAE Transactions* 105(2): 1179-1188.

Shonder J.A., V.D. Baxter, P.J. Hughes, and J.W. Thornton. 2000. A comparison of vertical ground heat exchanger design software for commercial applications. *ASHRAE Transactions* 106(1): 831-842.

Tinkler, G. 2000. Enlink Geoenergy Services. Personal communication to John Shonder, November.