ORNL/Sub-81/7762/1

# IMPROVING THE EFFICIENCY OF REFRIGERATORS AND HEAT PUMPS BY USING A NONAZEOTROPIC MIXTURE OF REFRIGERANTS

Philippe F. Launay

Date Published: October 1981

Report Prepared by
University of Illinois at Urbana-Champaign
Urbana, Illinois 61801
under
Subcontract 7762

for

Oak Ridge National Laboratory
Oak Ridge, Tennessee 37830
operated by
UNION CARBIDE CORPORATION
for the
U. S. Department of Energy
Contract No. W-7405-eng-26

# FOREWORD

This report was originally a thesis submitted in partial fulfillment of the requirements for the Master of Science degree in Mechanical Engineering in the Graduate College of the University of Illinois at Urbana-Champaign.

Kay E. Heidenreich
Energy Division
Oak Ridge National Laboratory

## ABSTRACT

A review of the literature since that covered in a 1978 Oak Ridge National Laboratory report (ORNL/Sub-78/55463/1) shows lively interest in the subject of refrigerant mixtures both for conserving energy in refrigerators and for adjusting the capacity of heat pumps. A paper by Jungnickel et al.* shows that the heat-transfer coefficient of a mixture is less than that of either of the components.

The major contribution of this thesis is in the refinement of the existing simulation program and in the development of an optimization technique using sensitivity coefficients. The optimization technique was applied on the two-evaporator refrigerator concept to determine the best distribution of a specified total heat transfer area. A further objective of the optimization was to determine the optimum concentration of a mixture of R-12 and R-114. For minimum compressor power the concentration of approximately 40% R-114 and 60% R-12 is optimum, and the distribution of heat-transfer area on a percentage basis is as follows:

| | |
|---|---|
| low-temperature evaporator | 28% |
| high-temperature evaporator | 12% |
| high-temperature heat exchanger | 4% |
| low-temperature heat exchanger | 0% |
| high-temperature condenser | 28% |
| low-temperature condenser | 28% |

The optimization study showed that the low-temperature heat exchanger could be omitted without affecting the power requirement.

A test facility has been constructed which is capable of measuring the power requirements for varying compositions of refrigerant mixtures.


*H. Jungnickel, P. Wassilew, and W. E. Kraus, "Investigations into Heat Transfer in Boiling Binary Refrigerant Mixtures," Paper No. B1-97, *XV International Congress of Refrigeration*, Venice, September 1979.

# IMPROVING THE EFFICIENCY OF REFRIGERATORS AND HEAT PUMPS BY USING A NON AZEOTROPIC MIXTURE OF REFRIGERANTS

Master of Science Thesis in Mechanical Engineering
University of Illinois at Urbana-Champaign

by

Philippe F. Launay
Dip. In., Ecole Centrale des Arts et Manufactures, 1978

under the direction of
W. F. Stoecker
Professor of Mechanical Engineering

1981

Urbana, Illinois

## ACKNOWLEDGEMENTS

The author thanks his advisor Dr. W. F. Stoecker for his friendly and patient help during the development of this thesis. Dr. Stoecker is also the author of the starting point of this work (Reference 1).

The sponsor of this project is the U.S. Department of Energy through Oak Ridge National Laboratory, operated by Union Carbide Corporation. We thank particularly the project monitor, Donald Walukas, for his help and guidance.

Other students have suffered on the experimental part of this project, burning their fingers while soldering, staining their jeans with compressor oil or scratching their T-shirts crawling under the evaporators. Therefore credit should be given, by order of time spent on the project, to: Kay Heidenreich, Mark Schmidt, Perry Baker and Paul Fuson.

Greg Cler, of the Mechanical Engineering workshop, taught the author how to solder pipes and helped him very efficiently to get acquainted with the confusing jargon of plumbing.

Amanda Horner and June Kempka should also get credit for having accepted an overload of work to type this report on time for the deposit deadline.

Finally the author would like to thank, as a whole, all the numerous people who helped make his stay in this country a very enjoyable and fruitful one.

TABLE OF CONTENTS

1. THE POTENTIAL FOR REFRIGERANT MIXTURES..... 1
1.1 The History of Refrigerant Mixtures..... 1
1.2 The Ideal Refrigeration Cycle with a Single Refrigerant..... 1
1.3 The Ideal Refrigeration System with a Binary Mixture..... 3
1.4 Further Explanation--Temperature Profiles..... 5

2. CURRENT STATUS OF THE APPLICATION OF REFRIGERANT MIXTURES..... 9
2.1 The Oak Ridge Report--Literature Published Before 1977..... 9
2.2 The Literature since the Oak Ridge Report..... 9

3. TEST FACILITY.....12
3.1 Purpose of the Experimental Tests.....12
3.2 Flow Diagram.....12
3.3 Following the Path of the Refrigerant.....17
3.4 The Evaporators, Condensers and Heat Exchangers...19

4. SIMULATION STUDIES.....24
4.1 Method of Simulation.....24
4.2 Modeling the Facility--Nomenclature.....24
4.3 Properties of the Refrigerants.....30
4.4 Equations describing the Facility--The subroutine EQNS.....33

5. OPTIMIZATION.....41
5.1 Definition--Sensitivity Coefficients.....41
5.2 Searching along the Constraint.....43
5.3 Direction of Maximum Improvement--Relative Gradient.....45
5.4 Univariant Search along the Relative Gradient--Convergence.....48
5.5 Parallelism of the Temperature Gradients.....49
5.6 Comments on the "relative gradient" method.....50
5.7 Result of the Optimization--The Program REFMIX5.....52

6. CONCLUSION AND RECOMMENDATIONS FOR FUTURE WORK.....62
6.1 Experimental Work.....62
6.2 Analytical work.....63

LIST OF REFERENCES.....65

APPENDICES
1 Listing of the Subroutine EQNS.....67
2 Listing of the Program REFMIX5 followed by a Line Line Explanation.....79
3 Sample Optimization.....97

# PREFACE

The purpose of this report is to:

1. Briefly summarize the main conclusions of previous papers qualitatively explaining why refrigerant mixtures have a potential for energy savings.
2. Examine the current status of the applications of refrigerant mixtures.
3. Describe an experimental facility designed to compare quantitatively the performance of refrigerant mixtures of varying composition while getting relevant data (e.g. heat transfer coefficents).
4. Present a computer simulation of this facility including an optimization study.

Although no experimental evidence is available at the time of the report the possibility of energy conservation by the use of refrigerant mixtures is confirmed analytically. The optimization study shows that optimal use of a mixture can be achieved with a system somewhat simpler than what was originally expected.

# 1. THE POTENTIAL FOR REFRIGERANT MIXTURES

## 1.1 The History of Refrigerant Mixtures

Though the idea of using a mixture of refrigerants instead of a pure refrigerant in a refrigeration system is nearly a century old, satisfying studies on the potential of a mixture for energy savings appeared only in the early 1950's. Since then, and especially during the 1970's many good papers have pointed out that using a non-azeotropic binary mixture can be advantageous from an energy standpoint when the refrigeration duty is to cool a fluid stream through a large temperature difference. Another advantage is that a mixture can achieve a low evaporating temperature with a moderate pressure ratio during single stage compression.

## 1.2 The Ideal Refrigeration Cycle with a Single Refrigerant

To get a feeling for a theoretical explanation of why a refrigerant mixture should be more efficient than standard systems in certain cases, let us consider the ideal refrigeration unit shown in Fig. 1-1.

The cycle consists of:

1. An isentropic compression from 1 to 2,
2. A condensation process from 2 to 3,
3. An isentropic expansion from 3 to 4 (the work being recovered), and
4. An evaporation process from 4 to 1.

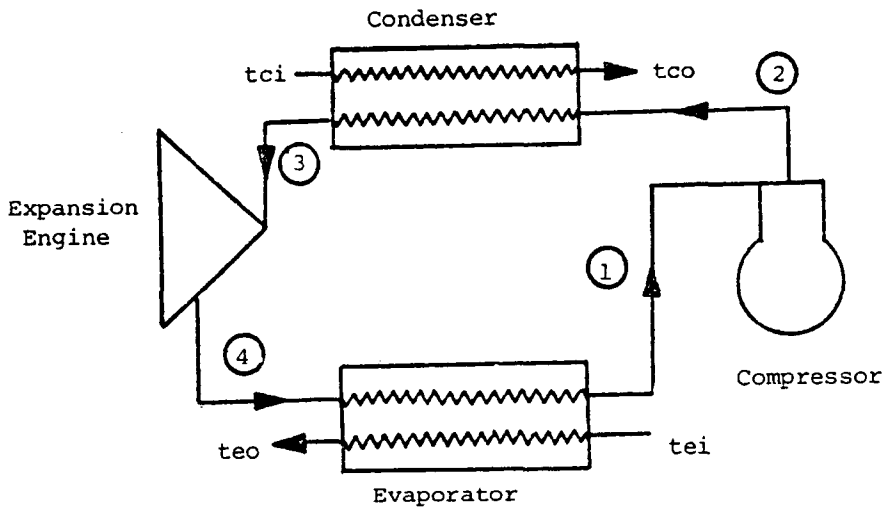


Figure 1-1 Ideal refrigeration system

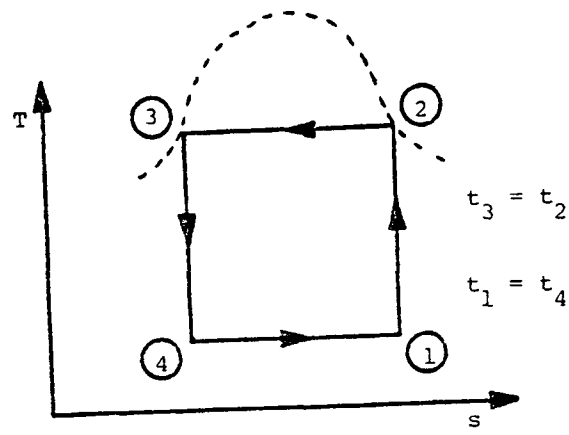


Figure 1-2 T-s diagram of an ideal refrigeration cycle using a single refrigerant

Assuming no pressure drop in the evaporator and the condenser, both evaporation and condensation occur at constant pressure. Therefore, if a single refrigerant is used, by virtue of a well-known property of all pure substances, the phase change in the condenser and the evaporator are constant temperature processes (ruling out, of course, any superheating or subcooling). If the cycle is represented on a T-s diagram, a Carnot cycle (Fig. 1-2) is obtained.

## 1.3 The Ideal Refrigeration System with a Binary Mixture

If we now consider the system of Fig.1-1 operated with a binary mixture, 2 to 3 and 4 to 1 will still occur a constant pressure but no longer at constant temperature. Classically, if the mixture is non-azeotropic, a constant pressure phase change takes place with a variation of temperature, the temperature gap between the saturated vapor and the saturated liquid being a function of the composition of the mixture (and, of course, of the components of the mixture). This fact is the root of the idea of using a mixture of refrigerants. One can follow, for instance, the condensation of an ideal (non-azeotropic) mixture of refrigerants in a pipe on a temperature concentration diagram (Fig. 1-3). The shape of the t-x-p curves for ideal mixtures (recommended since we want as large a temperature change as possible) can be easily derived from Raoult's and Dalton's law with a reasonable accuracy.

Because of the temperature change occurring during the evaporation and condensation with a binary mixture of

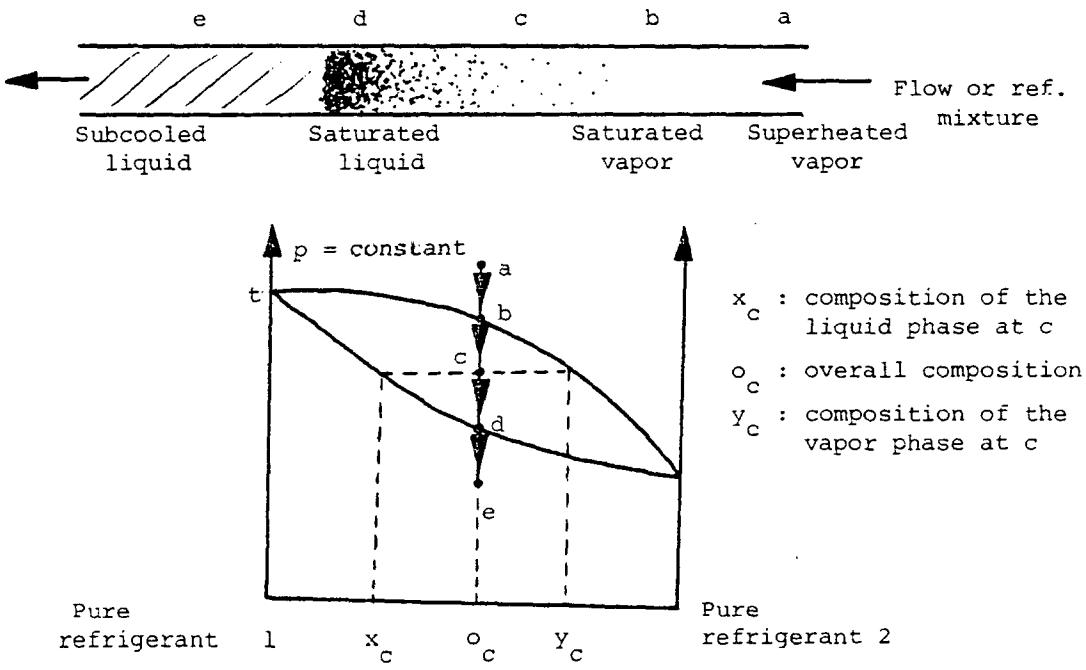


Figure 1-3 Condensation of a binary mixture in a pipe

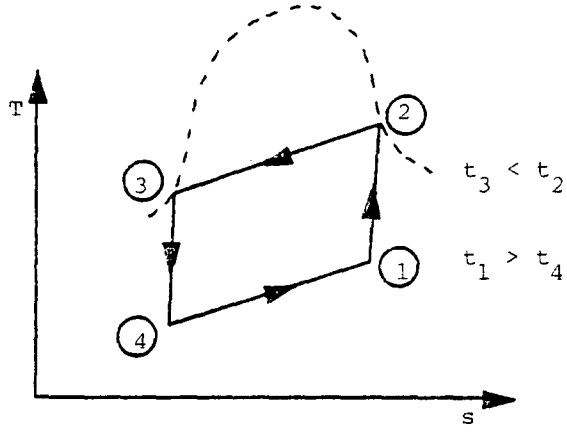


Figure 1-4 T-s diagram of an ideal cycle using a mixture of refrigerants

refrigerants used in the ideal system of Fig. 1-1 one would get a Lorenz cycle instead of a Carnot cycle (Fig. 1-4).

Assuming that these two cycles can perform the same duty operating with the same extreme temperatures (which is not exactly true as we will see later), we can compare the two cycles on the same T-s diagram (Fig. 1-5).

Since we consider ideal reversible cycles, areas on the T-s diagram represent energies. $Q_e$ and P being, respectively, the refrigeration heat and the net work necessary to operate the cycle in the single refrigerant system, and A and B being the triangular areas shown in Fig. 1-5, the coefficients of performance of the two cycles are:

$$\text{COP(single ref.)} = \frac{Q_e}{P} \qquad (1\text{-}1)$$

$$\text{COP(mixture)} = \frac{Q_e + B}{P - A - B} \qquad (1\text{-}2)$$

Thus the COP of the system operating with a mixture is higher.

## 1.4 Further Explanation--Temperature Profiles

One can get useful insight from temperature profiles in, say, an evaporator (similar conclusions can be drawn considering a condenser). At this point, the reader should note that, with the single refrigerant system, parallel flow crossflow or counterflow heat exchangers give exactly the same result (since the temperature of the refrigerant is constant). But with the

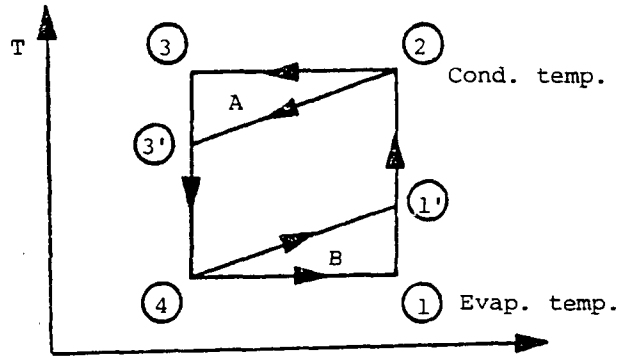


Figure 1-5

Composite T-s diagram

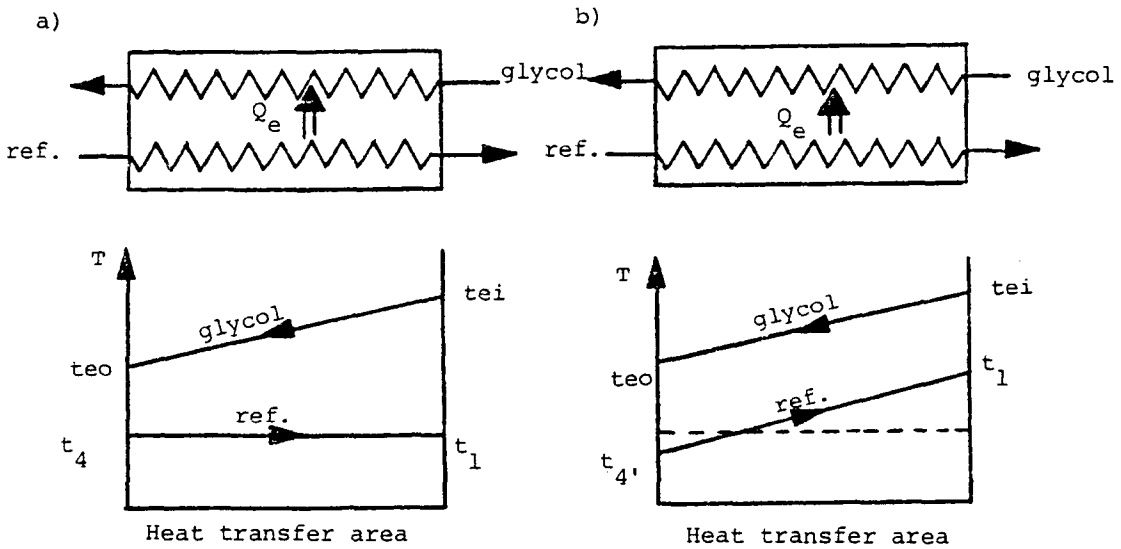


Figure 1-6 a) and b) Temperature profiles in the evaporator with a single ref. and a mixture resp.

Figure 1-7

More realistic composite T-S diagram

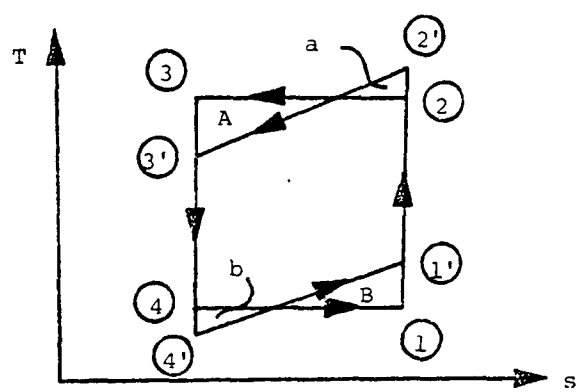

refrigerant mixture system, to achieve the temperature gap $t_1 - t_4$ shown in Fig. 1-4 one should use strictly <u>counterflow heat exchangers</u>, which is a major requirement of the system using a mixture.

Assuming that counterflow heat exchangers are used, one can compare the temperature profiles of both streams in the two cases (Fig. 1-6a and b). In Fig. 1-6a, we notice that on the inlet of antifreeze side the temperature difference tei - $t_1$ between the two streams is greater than teo - $t_4$ on the other side. When a mixture is used (Fig. 1-6b), since the temperature gap $t_1 - t_4$ is a function of the composition (given the two components of the mixture) there may be a composition for which the temperature changes of both streams match (or at least get closer). The two curves are then parallel which is thermodynamically more efficient.

However if we want the two systems to perform exactly the same refrigeration duty (same $Q_e$, tei and teo), the log-mean temperature differences in both cases must be equal:

$$t_{eo} - t_{4'} = \frac{((tei-t_1) - (teo-t_4)}{\ln((tei-t_1)/(teo-t_4)} \qquad (1\text{-}3)$$

So $t_{4'} < t_4$ and as mentioned previously, the diagram of Fig. 1-5 is a little biased. A more realistic diagram is given in Fig. 1-7. Consequently, a and b being the small areas defined in Fig. 1-7, in Eq. (1-2), A should be replaced by A - a and B should be replaced by B - b and a theoretical potential for energy savings exists if A > a of B > b or both (which was shown by simulation studies).

Figure 1-6 also clearly shows that it is possible to conserve energy with a refrigerant mixture only if the condenser cooling fluid or the fluid being chilled in the evaporator change temperature. If the temperature of the sink and the source are constant (for instance if the flow rates in the cooling and warming fluids approach infinity) the single refrigerant is more efficient.

# 2. CURRENT STATUS OF THE APPLICATION OF REFRIGERANT MIXTURES

## 2.1 The Oak Ridge Report--Literature Published Before 1977

The Oak Ridge report (Reference 1) was the starting point of the study of refrigerant mixtures conducted at the University of Illinois. Reference 1 includes p. 56 to 64 a critical review of 49 US and foreign papers on the use of a mixture of refrigerants that were published before 1977.

An independent simulation study showed that using a 50% mixture of R12-R114 in a two-evaporator refrigerator typical of domestic refrigerator could improve the COP of 12%. Based on this result and on the review of the literature the report concluded that the theoretical prospects looked favorable and recommended an experimental study.

## 2.2 The Literature since the Oak Ridge Report

Since the Oak Ridge report several papers on refrigerant mixtures have appeared. In order to update the bibliography given in Reference 1, these papers are listed in the list of References [4-11].

To demonstrate the interest in refrigerant mixtures in different fields and at different levels a short synopsis of some of these papers is given in the following.

Jakobs and Kruse [8]

This paper presents experimental results and is mostly directed toward the use of refrigerant mixtures in heat pumps.

Therefore the main desirable feature of mixtures that is taken advantage of is the gain of capacity control as well as of energy savings. The advantage of lower discharge temperatures when operating over the large pressure ratios experienced in heat pumps is also pointed out. The test facility used included a rectifier column to adjust the concentration of a mixture of R12-R114. the conclusion of the paper is that the first measurements confirm the theoretical predictions of the behaviour of non-azeotropic mixtures in heat pump applications:

1. "Gliding" temperatures in the two phase region of the heat exchangers (more parallel temperature profiles)
2. Improvement of the coefficient of performance
3. More capacity control

Kaiser, Salhi and Polcini [10]

This article refers to particular applications in cracking plants where a process fluid is to be cooled over a wide range and down to a very low temperature. Conventionally, propylene has been used for the higher temperature cooling and also for the condensing of ethylene in a low temperature cycle. The report suggests that mixed refrigerants have many advantages for the lower temperature cooling, providing a simpler system with less operating problems

Kasachki [11]

This report deals with the ability of a non azeotropic refrigerant mixture plant to maintain its characteistics should partial leakage occur and also investigates the consequent recharging of the plant. The method of recharging proposed illustrates the greater complication of the problem in the case of non-azeotropic mixtures as compared with single-component and azeotropic refrigerants.

Jungnickel, Wassilew and Kraus [9]

Heat transfer during nucleate pool boiling was experimentally determined for the mixtures R12-R113, R22-R12, R13-R12, R13-R22 and R23-R13. For purposes of comparison, the respective five pure refrigerants were also investigated. The measurement results show clearly that the heat transfer for an evaporating mixture deteriorates as compared to the pure components. Essential parameters influencing this reduction are pressure, difference between vapour and liquid composition and heat flux.

As a whole, these papers demonstrate much activity in the field of refrigerant mixtures that seem to have a wide range of applications. However, most of them point out that engineering bases of calculation are not yet available to the designer.

# 3. TEST FACILITY

## 3.1 Purpose of the Experimental Tests

The first recommendation of the Oak Ridge report (Reference 1) was to try to expand the experimental knowledge of the behaviour of refrigerant mixtures and to check if the favorable conclusions of the preliminary simulations would not be altered by practical problems (oil problems, bad equilibrium between liquid and vapor phase, low heat transfer coefficients, etc...). Pictures showing different views of the test facility designed and built for that purpose are shown in Fig. 3.1 and Fig. 3.2.

## 3.2 Flow Diagram

The flow diagram of the Fig. 3.3 together with Table 3.1 give an overview of the facility that includes seven basic components:

1. The high temperature condenser (HTC). The cooling fluid is tap water, the quantity of water is measured by a regular domestic water meter and the flow rate is controlled by a valve.
2. The low temperature condenser (LTC) exactly identical to the HTC.
3. The first refrigerant to refrigerant heat exchanger (HX1).
4. The second heat exchanger (HX2) similar to HX1.
5. The low temperature evaporator (LTE). The warming fluid is an antifreeze mixture of water and ethylene glycol and is

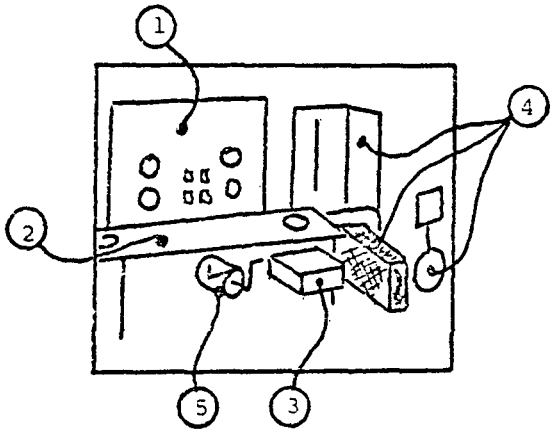


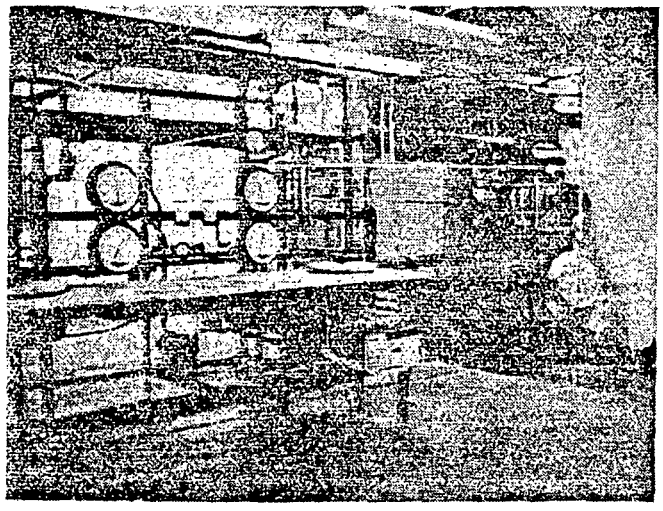

Figure 3-1 Photograph showing:.

1. the plexiglass control panel on which various gauges and meters are mounted
2. the bench bearing the two variable transformers
3. the data logger (thermocouple temperature) beneath the bench
4. the driving unit with the torque meter on the right
5. one of the glycol loop pumps in the back

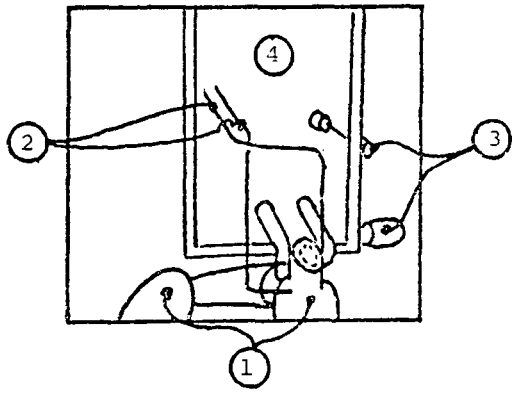


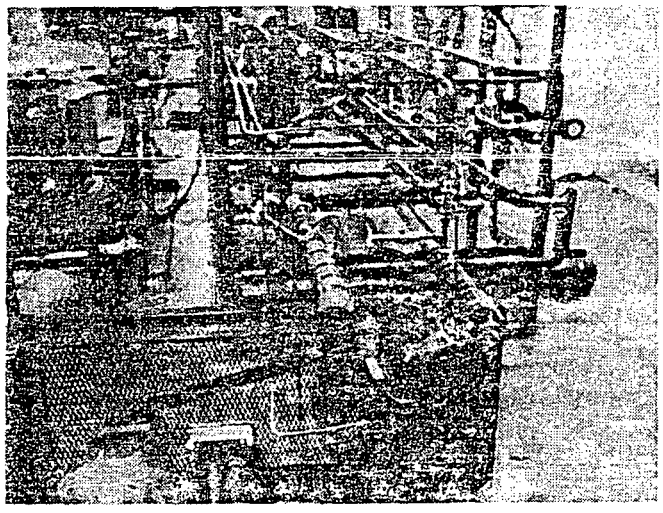

Figure 3-2 Photograph showing

1. the compressor and the variable speed motor
2. the pressure lines to measure the suction and discharge pressures
3. one of the glycol loop pumps and the corresponding heater on the right
4. the heat exchangers in the background

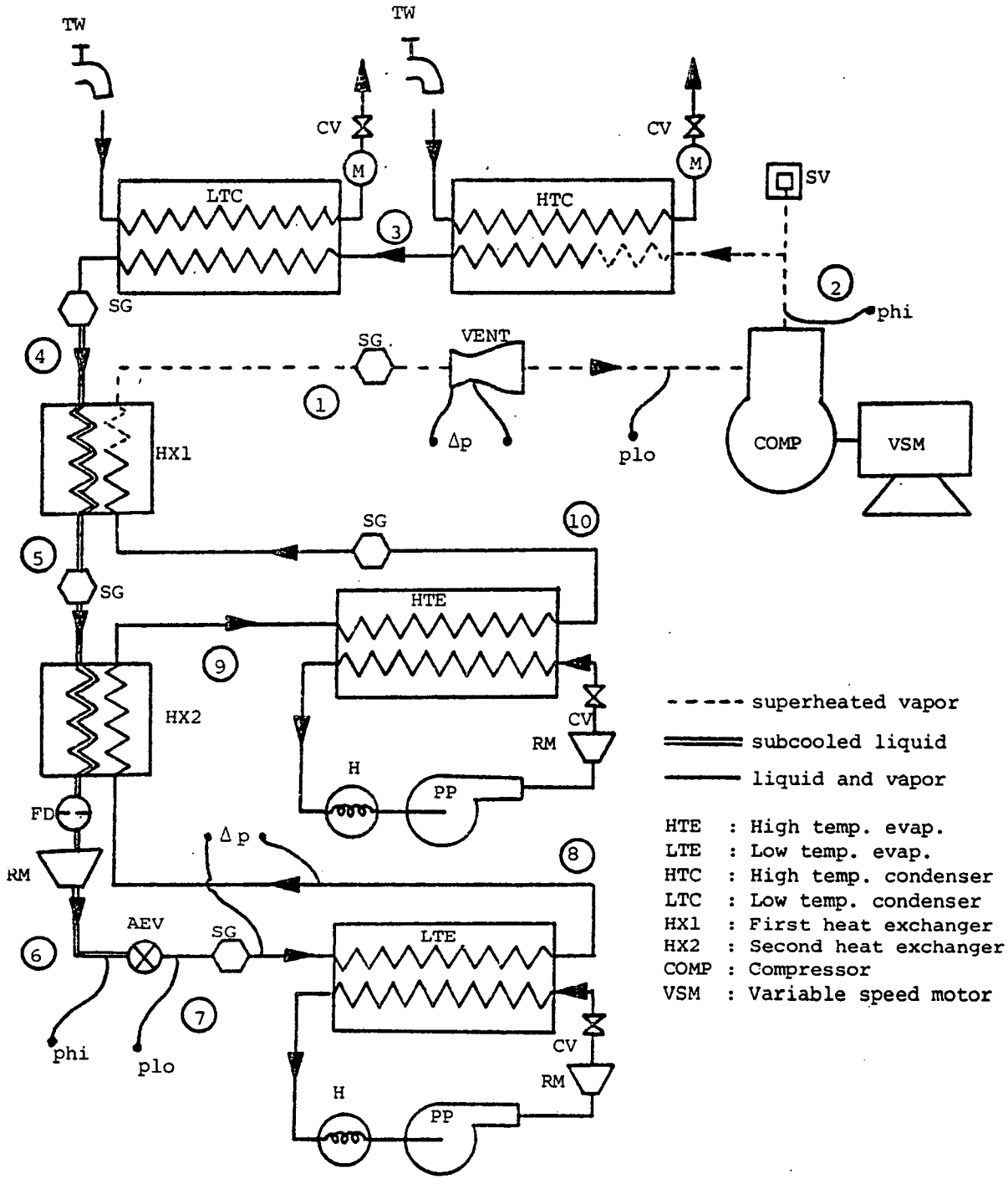


Figure 3-3 Flow diagram of the facility (see Table 3.1 for meaning of symbols)

Table 3.1 Symbols used in Figure 3.3

| | | |
|---|---|---|
| | SG | Sight glass |
| | TW | Tap water |
| | CV | Controlling valve |
| M | | Water meter |
| | SV | Safety valve |
| | phi | High pressure measurement |
| | plo | Low pressure measurement |
| | $\Delta p$ | Pressure difference measurement |
| | VENT | Venturi (flow rate of refrigerant measurement) |
| | RM | Rotameter |
| | H | Heater |
| | PP | Pump |
| | AEV | Adjustable expansion valve |
| | FD | Filter dryer |

recycled by a pump. Apart from the pump, this closed circuit (the "glycol loop") includes a domestic electrical heater that controls the heat load and a valve that controls the flow rate measured by a flowmeter of the rotameter type.

6. The high temperature evaporator (HTE) similar to the LTE.
7. The driving unit composed of a variable speed motor with torque and rpm measurements, coupled with a compressor.

It is hoped that the different possible adjustments (quantity of refrigerant charged in the system, pressure change through the adjustable expansion valve, speed of the motor, flow rates of water in both condensers and flow rates of glycol and heat load in both evaporators) will allow to keep the refrigeration duty (heat load and evaporating temperatures) constant, to control the superheat at point 1 and to satisfy the requirement of saturated liquid at point 4.

### 3.3 Following the Path of the Refrigerant

After the compressor at point 2 (Fig. 3.3) the hot refrigerant in form of high pressure superheated vapor enters the high temperature condenser (HTC) where it is cooled by tap water. Somewhere in the HTC, the refrigerant becomes saturated vapor and thereafter it condenses. The fraction of liquid phase goes on increasing in the low temperature condenser (LTC) between points 3 and 4 and at point 4 the refrigerant becomes saturated liquid (which can be checked thanks to a sight glass). Then between points 4 and 5 and between 5 and 6 the refrigerant is subcooled in heat exchanger 1 and heat exchanger 2 (HX1 and HX2)

by the cold refrigerant coming from the high temperature evaporator (HTE) and the low temperature evaporator (LTE), respectively. At point 6, the subcooled liquid passes through a filter drier and a flowmeter of the rotameter type. At this point, the refrigerant is still at a high pressure (though, of course, a little less high than at point 2, right after the compressor, due to pressure drops). Between points 6 and 7 the refrigerant is expanded through the adjustable expansion valve and the pressure drops. Pressure gauges measure the pressure on both the high and the low pressure sides of the expansion valve. At point 7 the cold, low pressure refrigerant is in the two-phase region and enters the low temperature evaporator. Between points 7 and 8, the refrigerant evaporates absorbing the heat produced in the glycol loop by the heater controlled by a variable transformer. the power to the heater is measured by an ammeter and a voltmeter. The pressure drop between points 7 and 8 in the LTE is measured by a differential pressure gauge and a differential pressure transducer. Between points 8 and 9, the refrigerant helps to "pull down" as much as possible the temperature at point 6 in HX2. Between points 9 and 10, the evaporation goes on in the HTE with a circuit very similar to the LTE. At some point between points 10 and 1 in HX1 the refrigerant reaches the saturated vapor state so that the sight glass at point 1 should show no liquid contrary to the sight glass at point 10. At point 1, the superheated low pressure vapor passes through a venturi that enables the measurement of the flow rate, to check the other measurement at point 6. The

pressure drop through the venturi is measured by a differential pressure transducer and a differential pressure gauge. Then, the refrigerant goes back in the compressor and returns at point 2, the pressure being again measured at both the high and the low pressure sides of the compressor.

### 3.4 The Evaporators, Condensers and Heat Exchangers

The LTE, HTE, LTC, HTC, HX1 and HX2 are all tube-in-tube counterflow heat exchangers, LTE, HTE, LTC, HTC being exactly identical.

The HTC, LTC, LTE and HTE all consist of a 12.7 mm (1/2 in.) ID and 15.9 mm (5/8 in.) OD hard copper tube of a total heat transfer length of 9.3 m, which gives a heat exchange area of about $0.42 m^2$. This inner tube in which the warm or cold refrigerant circulates is enclosed in a 25.4 mm (1 in.) ID and 28.6 mm (9/8 in.) OD hard copper tube with the cooling or warming fluid going the other way (at counterflow) in the interspace (Figs. 3.4 and 3.5). Four thermocouples in each stream measure the temperature of the flow, one in the inlet, one in the outlet, and two at intermediary positions. The solder tip of these thermocouples is directed in a direction opposite to the flow to get more accurate measurements. In addition to these, three long thermocouples going to the middle of each of the three branches of the "S" (see Fig. 3.4) on the refrigerant side (inner tube) plus three other thermocouples soldered on the surface of the inner tube, also in the middle, enable the measurement of the heat transfer coefficient on the refrigerant side. These

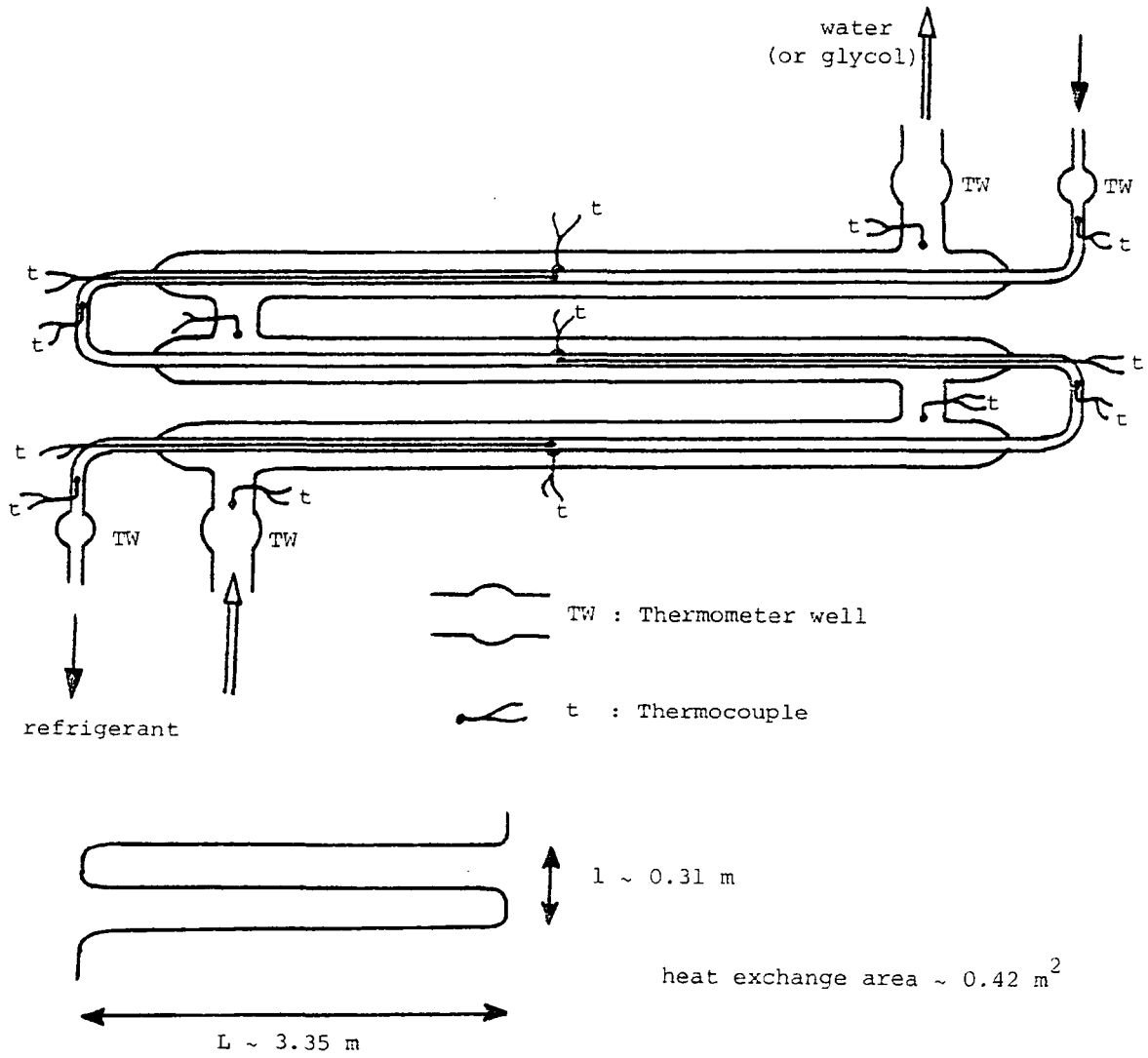


Figure 3.4 Schematic top view of the HTC, LTC, HTE or LTE

Figure 3.5 Cutaway view of a tube

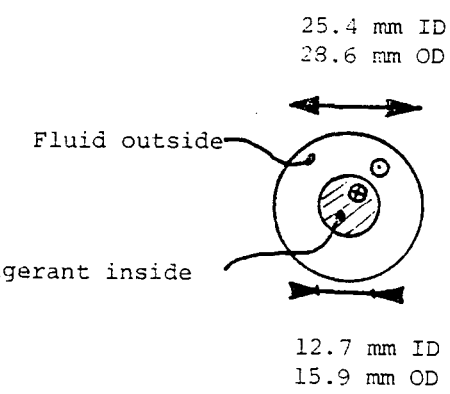

thermocouples are themselves inserted in a small 3.2 mm (1/8 in.) ID brass tubing and sealed with an epoxy at the outside end (Fig. 3.6). The first epoxy tried was leaking and the sealing is in fact ensured by a torr seal resin (designed for vacuum systems) on top of it. The long thermocouple tubings are held in place by two small star shaped pieces of plexiglas (Fig. 3.7). Four thermometer wells at both end of both streams permit a direct check of the temperatures given at these points by the thermocouples (Fig. 3.8). It should be noted that there is no solder joint in the enclosed part of the inner tube and, therefore, all the places where the refrigerant could leak are accessible and reparable (provided that there is no thermocouple too close because heating the pipe would melt the insulation).

HX2 is a 1.6 m long (heat exchange length) tube-in-tube counterflow heat exchanger which is build with the same pipes as the evaporators and condensers, i.e., 12.7 mm ID and 15.9 mm OD for the inside tube, 25.4 mm ID and 28.6 mm OD for the outside tube. The cold refrigerant from the LTE runs in the inner tube (to minimize heat transfer to the atmosphere). Four thermocouples and four thermometer wells enable the measurement of the temperatures at both end of both streams. HX1 has a heat exchange area of about 0.07 $m^2$.

HX1 is identical to HX2 in every respect except the length and the diameter of the pipes. The inner pipe where the transition two phase region-superheated region occurs is 19mm (3/4 in.) ID and 22.2mm (7/8 in.) OD (instead of 12.7 mm ID and 15.9 mm OD) to take into account the increase in specific volume

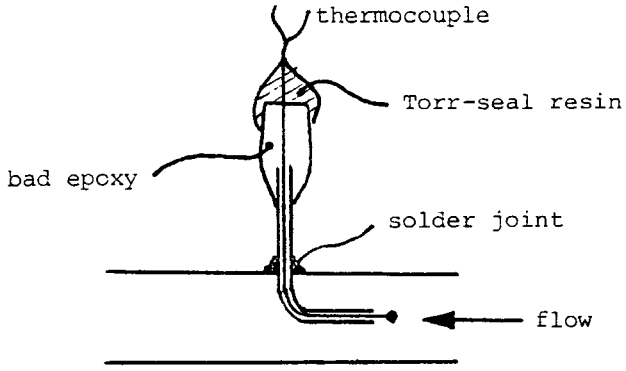


Figure 3.6 Sealing of the thermocouples

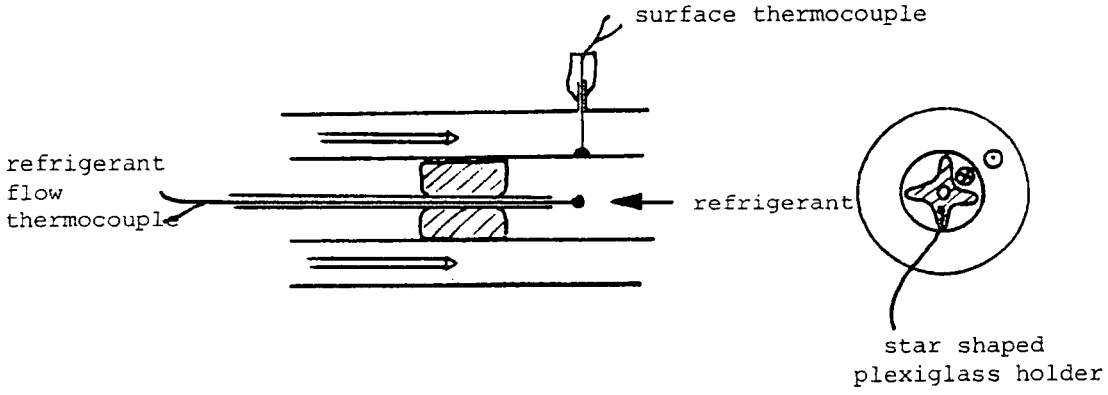


Figure 3.7 Arrangement of the thermocouples to measure the U-value on the refrigerant side.

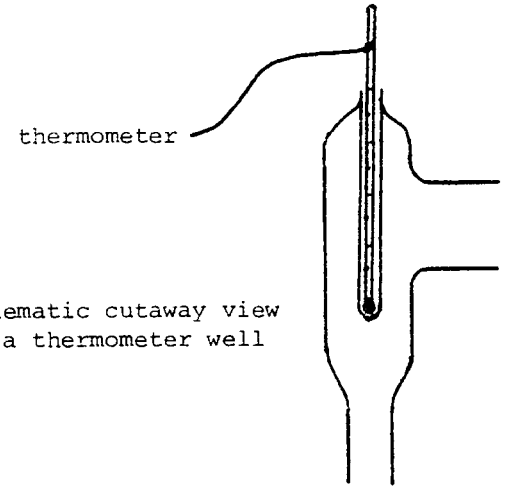


Figure 3.8 Schematic cutaway view of a thermometer well

of the refrigerant. The outside tubing is 31.7 mm (1 1/4 in.) ID and 34.9 mm (1 3/8 in.) OD. The heat transfer length is 1.4 m which gives a heat transfer area of about 0.09 $m^2$.

Of course the whole system is insulated except where the influence of the atmosphere is negligible.

The total heat transfer area is about 1.8 $m^2$.

# 4. SIMULATION STUDIES

## 4.1 Method of Simulation

To "simulate" a physical system means, in this context, to write equations realistically describing the system and to solve them. The sources of these equations are: characteristics of components, property equations, energy balances, and mass balances. Since in this case, as in most engineering cases, the results can be roughly predicted, the Newton-Raphson technique is a good method to solve these equations. The code, based on this technique, that was used in this study is fully described in Reference 2. Basically, when the user calls subroutine SIMUL, the matrix of the partials of the residuals with respect to the variables is computed numerically by subroutine PARDIF and then subroutine GAUSSY computes the correction of the variables to get a point closer to the solution than the initial one. The residuals corresponding to the equations describing the physical system are computed by subroutine EQNS written by the user. This code has been slightly modified to get more printing flexibility and to include the possibility of damping of the iterations in case of divergence.

A detailed description of program REFMIX5, written to simulate (and optimize) a two-evaporator, two-condenser, and two-heat exchangers refrigeration unit of the type of the test facility is given in APPENDIX 2.

## 4.2 Modeling the Facility--Nomenclature

The schematic diagram of the modeled system is shown in Fig. 4.1. The numbering convention corresponds to the convention of the facility flow diagram (Fig. 3.3).

The assumptions that were made are:

1. Saturated liquid at point 4 (after the low temperature condenser),
2. Imposed superheat at point 1 (before the compressor), and
3. No pressure drops and no heat transfer to the atmosphere.

For reasons developed in Reference 1, the mixture chosen was composed of Refrigerant R12 and R114.

The parameters (stored in program REFMIX5 as array DAT) that must be given for the program to be able to compute the unknown variables are:

| | | |
|---|---|---|
| DAT(1) | = conc | Global mass concentration of R114 in the mixture |
| DAT(2) | = Ael | Heat exchange area of the LTE, $m^2$ |
| DAT(3) | = $Ax_1$ | Heat exchange area of HX1, $m^2$ |
| DAT(4) | = $Ax_2$ | Heat exchange area of HX2, $m^2$ |
| DAT(5) | = Acl | Heat exchange area of the LTC, $m^2$ |
| DAT(6) | = Ach | Heat exchange area of the HTC, $m^2$ |
| DAT(7) | = Wgel | Flow rate of glycol in the LTE, kg/s |
| DAT(8) | = Wgeh | Flow rate of glycol in the HTE, kg/s |
| DAT(9) | = Wclt | Flow rate of cooling water in the LTC, kg/s |
| DAT(10) | = Wcht | Flow rate of cooling water in the HTC, kg/s |
| DAT(11) | = Qelt | Heating load on the LTE in kw |

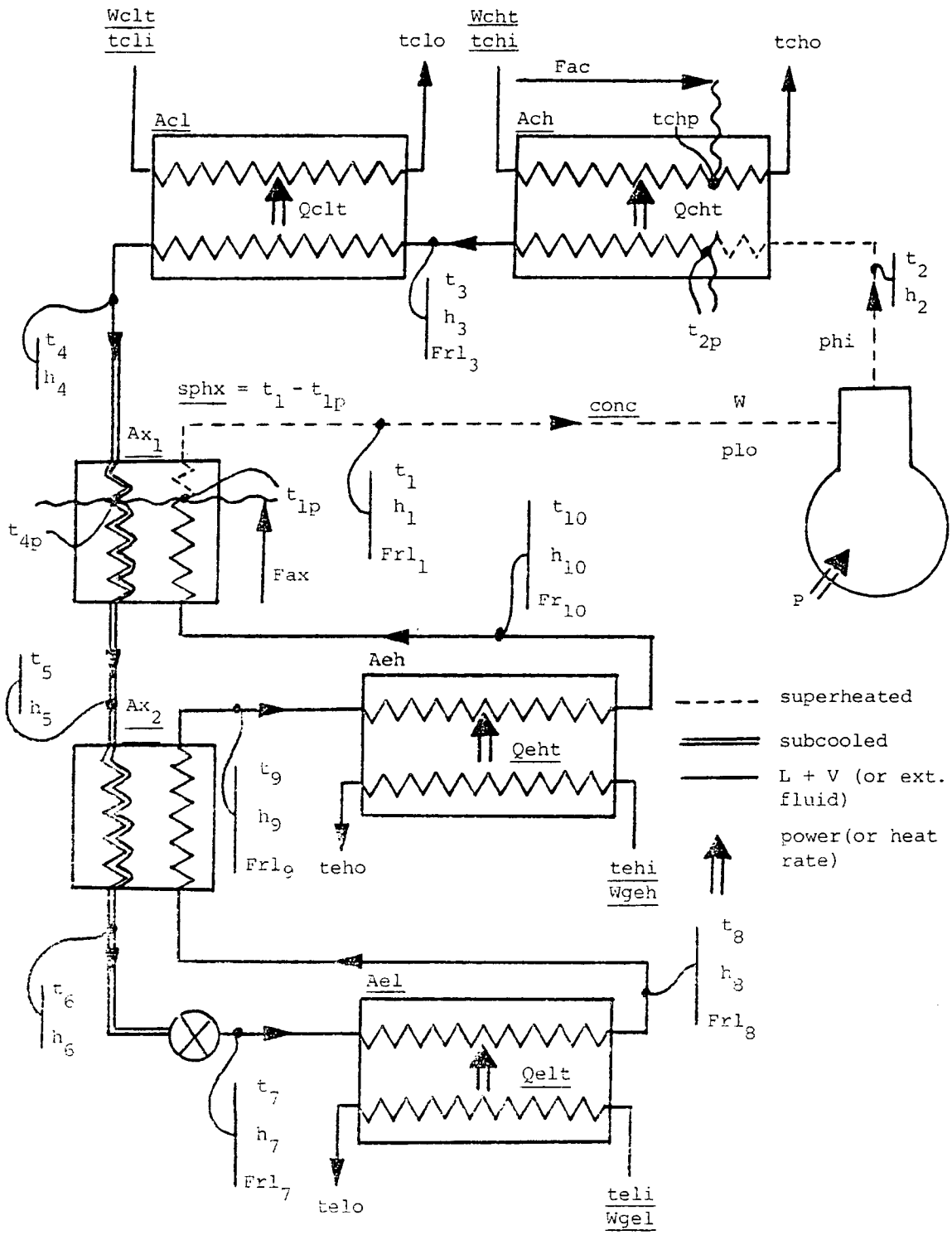


Figure 4.1 Model of the Facility (imposed parameters are underlined

| | | |
|---|---|---|
| DAT(12) = Qeht | Heating load on the HTE in kw |
| DAT(13) = tcli | Inlet temperature of water to the LTC, °C |
| DAT(14) = tchi | Inlet temperature of water to the HTC, °C |
| DAT(15) = teli | Inlet temperature of glycol to the LTC, °C |
| DAT(16) = tehi | Inlet temperature of glycol to the HTC, °C |
| DAT(17) = sphx | Superheat of the refrigerant at point 1, °C |

Given these parameters, subroutine SIMUL computes the exact value of the following 42 variables (stored in array V) with an iteration scheme starting from rough estimates.

| | |
|---|---|
| V(1) = W | Flow rate of refrigerant, kg/s |
| V(2) = phi | Pressure on high pressure side, kPa |
| V(3) = plo | Pressure on low pressure side, kPa |
| V(4) = $t_1$ | Temperature at point 1, °C |
| V(5) = $t_{1p}$ | Saturation temperature in HX1, °C |
| V(6) = $t_2$ | Temperature at point 2, °C |
| V(7) = $t_{2p}$ | Saturation temperature in the HTC, °C |
| V(8) = $t_3$ | Temperature at point 3, °C |
| V(9) = $t_4$ | Temperature at point 4, °C |
| V(10) = $t_{4p}$ | Temperature corresponding to $t_{1p}$ on other stream, °C |
| V(11) = $t_5$ | Temperature at point 5, °C |
| V(12) = $t_6$ | Temperature at point 6, °C |
| V(13) = $t_7$ | Temperature at point 7, °C |
| V(14) = $t_8$ | Temperature at point 8, °C |
| V(15) = $t_9$ | Temperature at point 9, °C |

| | | |
|---|---|---|
| V(16) = | $t_{10}$ | Temperature at point 10, $^{o}C$ |
| V(17) = | $h_1$ | Enthalpy at point 1, kJ/kg |
| V(18) = | $h_2$ | Enthalpy at point 2, kJ/kg |
| V(19) = | $h_3$ | Enthalpy at point 3, kJ/kg |
| V(20) = | $h_4$ | Enthalpy at point 4, kJ/kg |
| V(21) = | $h_5$ | Enthalpy at point 5, kJ/kg |
| V(22) = | $h_6$ | Enthalpy at point 6, kJ/kg |
| V(23) = | $h_7$ | Enthalpy at point 7, kJ/kg |
| V(24) = | $h_8$ | Enthalpy at point 8, kJ/kg |
| V(25) = | $h_9$ | Enthalpy at point 9, kJ/kg |
| V(26) = | $h_{10}$ | Enthalpy at point 10, kJ/kg |
| V(27) = | $Frl_7$ | Fraction of liquid at point 7 |
| V(28) = | $Frl_8$ | Fraction of liquid at point 8 |
| V(29) = | $Frl_9$ | Fraction of liquid at point 9 |
| V(30) = | $Fr_{10}$ | Fraction of liquid at point 10 |
| V(31) = | $Frl_3$ | Fraction of liquid at point 3 |
| V(32) = | Fac | Fraction of area of the HTC without superheat |
| V(33) = | Fax | Fraction of area of HX1 without superheat |
| V(34) = | Qclt | Rate of heat exchanged in the LTC, kw |
| V(35) = | Qcht | Rate of heat exchanged in the HTC, kw |
| V(36) = | tchp | Temperature corresponding to $t_{2p}$ on other stream, $^{o}C$ |
| V(37) = | Aeh | Area of HTE, $m^2$ |
| V(38) = | telo | Outlet temperature of glycol from the LTE, $^{o}C$ |
| V(39) = | teho | Outlet temperature of glycol from the HTE, $^{o}C$ |
| V(40) = | tclo | Outlet temperature of water from the LTC, $^{o}C$ |
| V(41) = | tcho | Outlet temperature of water from the HTC, $^{o}C$ |

V(42) = P  Compression power, kw

In an attempt to reduce the number of equations, neither the mass fractions of R114 in liquid and vapor phases in the five two-phase points (3,7,8,9,10), nor the enthalpies of the liquid and vapor phases at these points are computed directly by the simulation (as opposed to the work presented in Reference 1). These values are not as important to know as the values of the other variables and if needed they can be computed easily. Another difference between this program and the previous work is that the areas, rather than the UA's of the evaporators, condensers, and heat exchangers are given (the UA's are computed inside the subroutine EQNS). This choice of parameters is more logical because the final purpose of this program is to optimize the distribution of heat exchange area among HTC, LTC, HX1, HX2, LTE, and HTE. When accurate measurements of the heat transfer coefficients are available, they should replace the estimates presently used.

Because an equation was missing, the area of the high temperature evaporator is an unknown which means that the size of this evaporator is a function of the design of the rest of the system. This was preferred to getting the missing equation by arbitrarily fixing one of the variables.

To be able to make a fair comparison between a pure refrigerant and a mixture the refrigeration duty, controlled by the parameters Qelt, Qeht, Qgel, Wgeh, teli, tehi can be kept

constant (consequently telo and teho are not really unknowns since they can be computed easily given these parameters).

In the rest of the text the term "parameters" refers to the variables needed by the simulation program as data input to compute the other variables, simply referred to as the "variables". Given a rough guess of the "variables" the program computes their exact values which are functions of the parameters. For instance, the power P and the area of the HTE, Aeh (respectively V(42) and V(37) in the program REFMIX5) are functions of conc, Acl, $Ax_1$,...sphx (array DAT in the program REFMIX5).

## 4.3 Properties of the Refrigerants

The equations solved by subroutine SIMUL are, as already mentioned, expressed in subroutine EQNS that has been written to be as readable as possible (see APPENDIX 1).

The saturation pressures and the enthalpies of saturated liquid and vapor of both R12 and R114 as a function of the temperature are the same as those used in the Department of Energy report (Reference 1). They are defined as FORTRAN arithmetic statement functions in the beginning of subroutine EQNS. Other properties defined in the beginning of EQNS are: conversion from mass fraction to mole fraction of R114 and vice versa, plus mole concentration of R114 in the liquid and in the vapor derived using Dalton and Raoult's laws (for more details see Reference 1, p. 18).

However, more general equations for the isentropic work of compression of R12 and R114 were needed because the vapor at point 1 (initial point of the compression) is no longer assumed to be saturated but has instead a given superheat sphx. These equations express the isentropic work as a function of t (the initial temperature in $^{o}C$), $p_1$ (the initial pressure in kPa) and $p_2$ (the final pressure in kPa).

1. Isentropic work of compression of R12 (kJ/kg)

$$
\begin{aligned}
WI_2(t,p,_1p,_2) = (t+273.15)[((&.6933\ 10^{-1} + .232\ 10^{-4}t) \\
&+ (-.201910^{-4} + 0.757\ 10^{-7}t)\ p_1)\ \ln\ (p_2/p_1) \\
&+ ((.414\ 10^{-2} - .148\ 10^{-4}t) + (-.876\ 10^{-5} + \\
&\quad .231\ 10^{-6}\ t)\ p_1)\ \ln^2(p_2/p_1)]
\end{aligned}
$$

2. Isentropic work of compression of R114 (kJ/kg)

$$
\begin{aligned}
WI_4(t,p_1,p_2) = (t + 273.15)\ [((&.4969\ 10^{-1} + 0.36\ 10^{-5}t) \\
&+ (-.302410^{-4} + .4083\ 10^{-6}t)\ p_1)\ \ln(p_2/p_1) \\
&+ ((.75\ 10^{-3} + .285\ 10^{-4}t) + (.428\ 10^{-5} + \\
&\quad .365\ 10^{-6}\ t)\ p_1)\ \ln^2\ (p_2/p_1)]
\end{aligned}
$$

These equations have an accuracy of 0.1%, based on values computed from tables, in the operating range. The total power is computed substituting the <u>partial pressures</u> of R12 and R114 in $WI_4$ and $WI_2$, proportioning them on a mass basis, multiplying by

the refrigerant flow rate and dividing by the efficiency (taken as 0.75).

Moreover in this version the superheat is taken into account by breaking both HX1 and HTC into two parts (evaporating and superheating part and condensing and desuperheating part respectively). Therefore equations for the enthalpies of the superheated vapors of R12 and R114 as a function of the pressure (in kPa) and the temperature ($^{o}C$) had to be derived. These equations are:

1. Enthalpy of superheated vapor of R12 (kJ/kg)

scaled pressure $pp = (p - 609.81)/554.19$

scaled temperature $tp = (t - 10)/50$

$$h2sh = (351.740 - 12.954\ pp - 2.367\ pp^2)$$
$$(35.957 + 8.406\ pp + 2.484\ pp^2)\ tp +$$
$$(-.619 - 2.379\ pp - .748\ pp^2)\ tp^2$$

2. Enthalpy of superheated vapor of R114 (kJ/kg)

scaled pressure $pp = (p - 251.66)/244.77$

scaled pressure $tp = (t - 10)/55.556$

$$h4sh = (341.528 - 4.4\ pp - .432\ pp^2) +$$
$$(39.811 + 2.054\ pp + .232\ pp^2)\ tp +$$
$$(1.475 - .535\ pp + .012\ pp^2)\ tp^2$$

These equations were obtained applying least square fits to tabular data, which is the origin of these scaled temperatures and pressures used to reduce the range of the variables to

[-1,+1]. This method often gives much better results with least square fits than the straightforward way (see Forsythe, Computer Methods for Mathematical Computations, pp. 199-200). Both h2sh and h4sh are accurate to 0.1% in the operating range.

## 4.4 Equations describing the Facility--The subroutine EQNS

As noted in Section 4.2 certain unknowns are not explicitly given in the output of subroutine SIMUL. They are computed inside subroutine EQNS before the residuals, as part of preliminary computations and substituted when needed.

Turning now to the external fluids, the specific heat (in kJ/($^{o}$C kg)) of a 50% water-glycol antifreeze (suitable down to -30$^{o}$C) as a function of the temperature t in $^{o}$C can be taken as: cpg = 3.324 + 0.0046t (W. F. Stoecker Refrigeration and air conditioning, Chapter 15).

Also included in the preliminary computations are the computations of the UA-values and in particular of the UA-values of the LTC and HX1, both broken into two parts. Since Fac is the fraction of area of the HTC where there is only condensation, the area of condensation Aco is:

$$Aco = Fac \times Ach$$

and the area of desuperheat is:

$$Ads = (1 - Fac) \times Ach$$

The UA's are then computed by multiplying these areas by the heat transfer coefficients. UAEX and UASX, the UA values in the evaporating and superheating part of HX1, are computed in a similar manner.

Residuals 1 through 5 enable the computation of the fraction of liquid at points 7,8,9,10,3 using xl's and xv's from the preliminary computations. They express the conservation of the mass of R114 with an equation of the form:

RES(1) to RES(5) conc = Frl x xl + (1 - Frl) x xv

Residuals 6 through 10 enable the computation of the enthalpy at points 7,8,9,10,3 using hl's and hv's from the preliminary computations.

RES(6) to RES(10) h = Frl x hl + (1 - Frl) x hv

Residuals 11,12,13 enable the computation of the enthalpy at points 4,5,6 (saturated or subcooled liquid points; the enthalpy of the subcooled liquid can be fairly well approximated by the enthalpy of the saturated liquid at the same temperature).

RES(11) to RES(13) h = conc x hl141 (t) +
+ (1 - conc) x hl21(t)

Residuals 14 through 21 express heat exchanger equations (one equation each for LTC, HX2, LTE and HTE but two equations for HTC and HX1 that have been broken into two parts). When possible these equations have been written in the logarithmic form that was found to converge faster.

$$\text{RES(14)}\quad Qclt = UACL \times \frac{((t_3 - tclo) - (t_4 - tcli))}{\ln((t_3 - tclo)/(t_4 - tcli))}$$

$$\text{RES(17)}\quad Qelt = UAEL \times \frac{((teli - t_8) - (telo - t_7))}{\ln((teli - t_8)/(telo - t_7))}$$

$$\text{RES(18)}\quad Qeht = UAEH \times \frac{((tehi - t_{10}) - (teho - t_9))}{\ln((tehi - t_{10})/(teho - t_9))}$$

$$\text{RES(21)}\quad W \times (h_9 - h_8) = UAX2 \times \frac{((t_5 - t_9) - (t_6 - t_8))}{\ln((t_5 - t_9)/(t_6 - t_8))}$$

Residuals 15 and 16 result from the breaking of the HTC into two parts (Fig. 4.2).

As already seen

$$Aco = Fac \times Ach \qquad Ads = (1 - Fac) \times Ach$$

$$UACO = Uco \times Aco \qquad UADS = Uds \times Ads$$

$Q_1$ and $Q_2$ being the heat rates in kw defined in Fig. 4.2

$$Q_1 + Q_2 = Qcht$$

$$Q_1 = CPwa \times Wcht \times (tcho - tchp)$$

$$Q_2 = CPwa \times Wcht \times (tchp - tchi)$$

and $Q_1/Q_2 = (tcho-tchp)/(tchp-tchi)$

Therefore

$$Q_1 = Qcht \times \frac{(tcho - tchp)}{(tcho - tchi)}$$

$$Q_2 = Qcht \times \frac{(tchp - tchi)}{(tcho - tchi)}$$

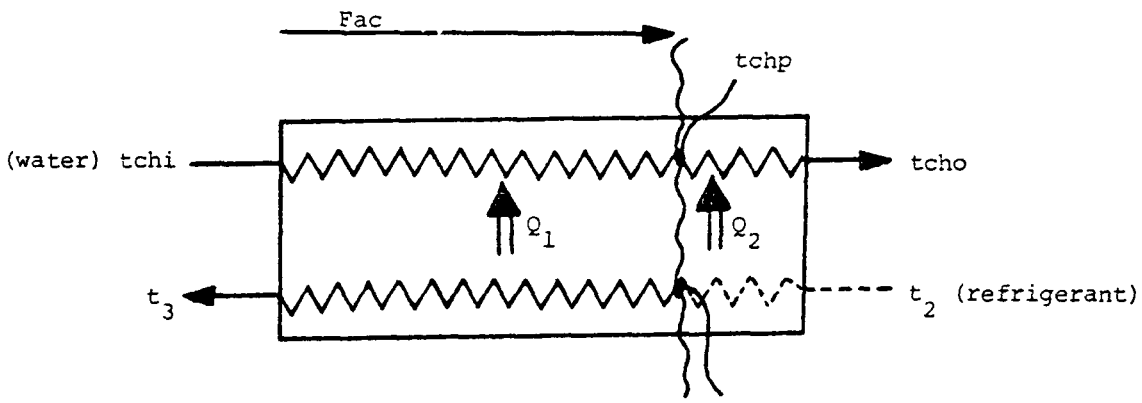


Figure 4.2 Breaking the HTC into two parts

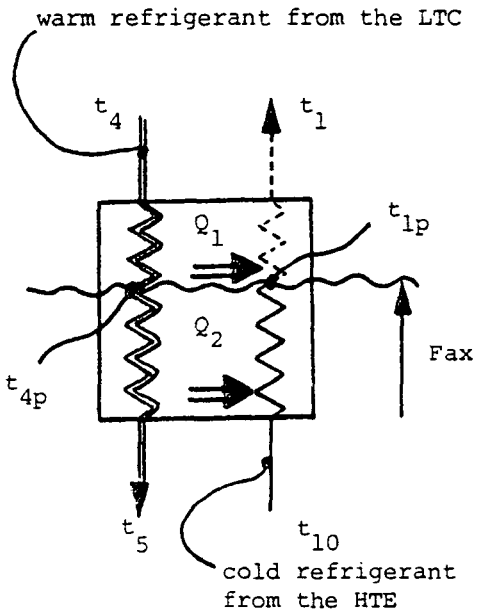


Figure 4.3 Breaking $HX_1$ into two parts.

Eliminating $Q_1$ and $Q_2$

$$\text{RES(15)} \quad Qcht \times \frac{(tcho-tchp)}{(tcho-tchi)} = UADS \times \frac{((t_2-tcho) - (t_{2p}-tchp))}{\ln((t_2-tcho)/(t_{2p}-tchp))}$$

$$\text{RES(16)} \quad Qclt \times \frac{(tchp - tchi)}{(tcho - tchi)} = UACO \times \frac{((t_{2p} - tchp) - (t_3 - tchi))}{\ln((t_{2p} - tchp)/(t_3 - tchi))}$$

Residuals 19 and 20 can be rederived in a similar way replacing Qcht by $W \times (h_1 - h_{10})$ (Fig. 4.3)

$$Aex = Fax \times Ax_1 \qquad Asx = (1 - Fax) \times Ax_1$$

$$UAEX = Uhx \times Aex \qquad UASX = Usx \times Asx$$

$$Q_1 = W \times (h_1 - h_{10}) \times (t_{2p} - t_{4p})/(t_4 - t_5)$$

$$Q_2 = W \times (h_1 - h_{10}) \times (t_{4p} - t_5)/(t_4 - t_5)$$

$$\text{RES(19)} \quad W \times (h_1 - h_{10}) \times \frac{(t_4-t_{4p})}{(t_4 - t_5)} = UASX \times \frac{((t_4 - t_1) - (t_{4p} - t_{1p})}{\ln((t_4 - t_1)/(t_4 - t_{1p})}$$

$$\text{RES(20)}\ W \times (h_1 - h_{10}) \times \frac{(t_{4p} - t_5)}{(t_4 - t_5)} = UAEX \times \frac{((t_{4p} - t_{1p}) - (t_5 - t_{10}))}{\ln((t_{4p} - t_{1p})/(t_5 - t_{10}))}$$

Residuals 22,23,24 express saturation conditions (saturated liquid at point 4 and saturated vapor at points 1p and 2p).

RES(22) mol(conc) = xcv1p (global mole conc.=mole conc. in vapor)

RES(23) mol(conc) = xcl4 (global mole conc.=mole conc. in liquid)

RES(24) mol(conc) = xcv2p

Residuals 25 through 32 express heat balances on the refrigerant side.

RES(25) $Qelt = W \times (h_8 - h_7)$ (HB in LTE)

RES(26) $h_7 = h_6$ (HB in expansion valve)

RES(27) $Qcht = W \times (h_2 - h_3)$ (HB in HTC)

RES(28) $Qclt = W \times (h_3 - h_4)$ (HB in LTC)

RES(29) Qclt + Qcht = P + Qelt + Qeht (global HB)

RES(30) $h_1 - h_{10} = h_4 - h_5$ (HB in HX1)

RES(31) Qeht = W x $(h_{10} - h_9)$ (HB in HTE)

RES(32) $h_5 - h_6 = h_9 - h_8$ (HB in HX2)

Residuals 33 through 42 express the remaining equations

RES(33) $h_2$ = conc x h4sh2 + (1 - conc) x h2sh2 (Enthalpy at 2)

RES(34) P = W x [conc x E114 + (1 - conc) x E12]/η (Power)

RES(35) $h_1$ = conc x h4sh1 + (1 - conc) x h2sh1 (Enthalpy at 1)

RES(36) $(h_4 - h_5) \times \frac{(t_4 - t_{4p})}{(t_4 - t_5)} = h_1 - [\text{conc} \times \text{h114v1p} + (1 - \text{conc}) \times \text{h12v1p}]$

(From breaking HX1 into two parts)

RES(37) $\text{Qcht} \times \frac{(\text{tcho} - \text{tchp})}{(\text{tcho} - \text{tchi})} = W \times (h_2 - \text{conc} \times \text{h114v2p} - (1 - \text{conc}) \times \text{h12v2p})$

(From breaking the HTC into two parts)

RES(38) Qelt = Wgel x CPgl x (teli - telo)
(HB in the LTE on glycol side)

RES(38) Qelt = Wgeh x CPgh x (tehi - teho)
(HB in the HTE on glycol side)

RES(40) sphx = $t_1 - t_{1p}$ (by definition of sphx)

RES(41) Qclt = Wclt x CPwa x (tclo - tcli)
(HB in the LTC on water side)

RES(42) Qcht = Wcht x CPwa x (tcho - tchi)
(HB in the HTC on water side)

# 5. OPTIMIZATION

## 5.1 Definition--Sensitivity Coefficients

When the simulation is successful, i.e. subroutine SIMUL computes the 42 variables given the 17 parameters with a fair efficiency, the next step is to try to find the set of parameters that gives the most "desirable" results, in other words to optimize. The first task, then, is to choose a definition of these most desirable results. A reasonable one would be to find the concentration of the mixture and the distribution of area among HTC, LTC, HX1, HX2, LTE and HTE that gives a minimum power while keeping constant the sum of these areas. (If the global size of the system increases with the same distribution of area the power will decrease without having really improved the system). The other parameters, in particular those that define the refrigeration duty: Qelt, Qeht, teli, tehi, Wgelt, Wgeht and the flow rates in the condensers Wclt and Wcht should be kept constant. Another possible approach could be to find the minimum of the same objective function P but optimizing the distribution of cooling fluid flow rates in the condensers Wclt and Wcht keeping their sum constant ("In which cooling fluid stream is it worth putting the biggest pump?").

The first step of the optimization method used in this study was to compute the sensitivity coefficients of each variable with respect to each parameter, i.e. to solve the problem: "What is the variation of this variable resulting from a unit variation of this parameter?". The most straightforward way to compute these

sensitivity coefficients is to increase each parameter of a small amount and to carry out the simulation, in other words to compute them numerically. But there is a more elegant (and more efficient) way which simply takes advantage of a by-product of the Newton-Raphson iteration technique: the Jacobian at the solution Point, (W. F. Stoecker, "Lectures in thermal systems," ME 423, University of Illinois, 1980). During simulation subroutine GAUSSY solves the matrix equation:

$$[PD]\ [Vcorr] = [R] \qquad (5.1)$$

where [PD] is the 42 x 42 matrix of the partials of all 42 residuals R with respect to all 42 variables V (computed numerically by subroutine PARDIF), [Vcorr] is the 42 array of the variations of the 42 variables to correct them in order to get a point closer to the solution, [R] is the 42 array of the current value of the residuals. At the solution of the simulation $R_i = 0$ therefore $Vcorr_i = 0$ ($i = 1,...42$). If, starting from the solution, we increase one of the parameters DAT(K) by a small amount $\Delta D_k$ that produces a change [ $\Delta R$] in the array of the residuals, the resulting change [ $\Delta V$] in the array of the variables will be such that:

$$[PD]\ [\Delta V] = -\ [\Delta R] \qquad (5.2)$$

and

$$[\Delta V] = -\ [PD^{-1}]\ [\Delta R]$$

$$\Delta V_j = - \sum_{i=1}^{42} PD_{ji}^{-1} \Delta R_i$$

$$\frac{\Delta V_j}{\Delta D_k} = - \sum_{i=1}^{42} PD_{ji}^{-1} \left(\frac{\Delta R_i}{\Delta D_k}\right)$$

Taking the limit as $\Delta D_k \to 0$ we get the sensitivity coefficients

$$SC_{jk} = \frac{\partial V_j}{\partial D_k} = - \sum_{i=1}^{42} PD_{ji}^{-1} \frac{\partial R_i}{\partial D_k} \qquad (5.3)$$

Consequently to compute the change in the variable V(J) produced by a unit change in the parameter DAT(K) all one has to do is to invert the matrix [PD] and to compute (numerically in this case) the partials of the residuals with respect to the parameter DAT(K) $\frac{\partial R_i}{\partial D_k}$ (i = 1,...42). Using an efficient routine to invert [PD], this half-analytic procedure ([PD] and $\frac{\partial R_i}{\partial D_k}$ are computed numerically) turns out to be about 15 times faster than the "brute force" way of running a simulation for each small change of a parameter.

## 5.2 Searching along the Constraint

At this point one is able to predict what would be the effect on the power P and on the area Aeh of a small change in conc, Acl, $Ax_1$, $Ax_2$, Acl or Ach and the problem to be solved is to minimize P staying on the constraing Ael + Aeh + $Ax_1$ + $Ax_2$ + Acl + Ach = 1.5 $m^2$ (arbitrary number of the same order of magnitude as the total heat exchange area in the actual facility). For notational conveniences let

$$P = f \qquad Ach = h$$

$$conc = x_1 \qquad Ael = x_2 \qquad Ax_1 = x_3$$

$$Ax_2 = x_4 \qquad Acl = x_5 \qquad Ach = x_6$$

$$\frac{\partial f}{\partial x_i} = a_i \quad (i = 1,\ldots 6)$$

$$\frac{\partial h}{\partial x_1} = b_1$$

$$1 + \frac{\partial h}{\partial x_i} = b_i \quad (i = 2,\ldots 6)$$

With these notations the problem is to minimize $f(x_1,\ldots x_6)$ subject to

$$x_2 + x_3 + \ldots + x_6 + h(x_1,x_2,\ldots x_6) = 1.5$$

all $\frac{\partial f}{\partial x_i}$ and $\frac{\partial h}{\partial x_i}$ being known. The method of "search along the constraint" or "hemstiching" (Reference 3) is classical in such a case. (In the following derivation as in the rest of the text the second order terms are neglected).

Starting from a trial point, the first step is to drive toward the constraint to get a feasible point. If at the trial point

$$x_2 + x_3 + \ldots + h(x_1,\ldots x_6) = Sa,$$

assuming small $\Delta x_i$'s, the variation of the total area is:

$$\Delta x_2 + \ldots + \Delta x_6 + \Delta h = \Delta x_2 + \ldots + \Delta x_6 + \frac{\partial h}{\partial x_1} \Delta x_1 + \ldots + \frac{\partial h}{\partial x_6} \Delta x_6$$

$$= b_1 \Delta x_1 + b_2 \Delta x_2 + \ldots + b_6 \Delta x_6$$

and to get the desired change the $\Delta x_i$'s must be such that:

$$\sum_{i=1}^{6} b_i \Delta x_i = 1.5 - Sa$$

Classically, the fastest move to get this result is such that

$$\Delta x_i = \lambda b_i \qquad \lambda = \frac{(1.5 - Sa)}{\sum_{i=1}^{6} b_i^2} \tag{5.4}$$

and if the trial point was not too far from the constraint, the move:

$$x_i \leftarrow x_i + \left(\frac{1.5 - Sa}{\sum_{i=1}^{6} b_i^2}\right) \tag{5.5}$$

should give a fairly good feasible point (if not one can iterate until the constraint is reached).

## 5.3 Direction of Maximum Improvement--Relative Gradient

Once on the constraint the method is to move tangentially to it in the direction of maximum improvement of the objective

function. To find how to determine this direction it can be useful to examine a simpler problem. For instance trying to optimize the one-evaporator, one condenser, one-heat exchanger system considered Fig. 5.1 <u>at a constant concentration, all three areas being parameters</u> letting

$$p = f,\ Aco = Ax_1 = x_1,\ Ahx = Ax_2 = x_2,\ Acv = Ax3 = x_3$$

and $$\frac{\partial f}{\partial x_i} = a_i \quad (i = 1,2,3),$$

the equivalent problem would be to minimize $f(x_1,x_2,x_3)$ at a constant area $\Delta x_1 + \Delta x_2 + \Delta x_3 = 0$. Intuitively $a_i$ represents the "efficiency" of heat exchanger i and it is desired to take some area from an inefficient heat exchanger to put it in a more efficient one. A straightforward way to do this is to compute an average $A_v$ of these "efficiencies" and to change the area of heat exchanger i proportionally to $a_i - A_v$. This way if Hxi is more efficient than average its area is going to increase whereas if it is less efficient its area will decrease accordingly. In other words, to take the constraint into account, the real gradient (usual direction of fastest move) is replaced by a "relative gradient"

$$Av = (a_1 + a_2 + a_3)/3$$

and if $\Delta x_i = \lambda(a_i - Av) \quad (i = 1,2,3)$ then,

$$\Delta x_1 + \Delta x_2 + \Delta x_3 = 0$$

so <u>the move along the "relative gradient" is tangent to the constraint.</u>

The actual problem is to minimize $f(x_1,\ldots x_6)$ subject to $\sum_{i=1}^{6} b_i\ \Delta x_i = 0$ knowing the gradient $\frac{\partial f}{\partial x_i} = a_i (i = 1,\ldots,6)$.

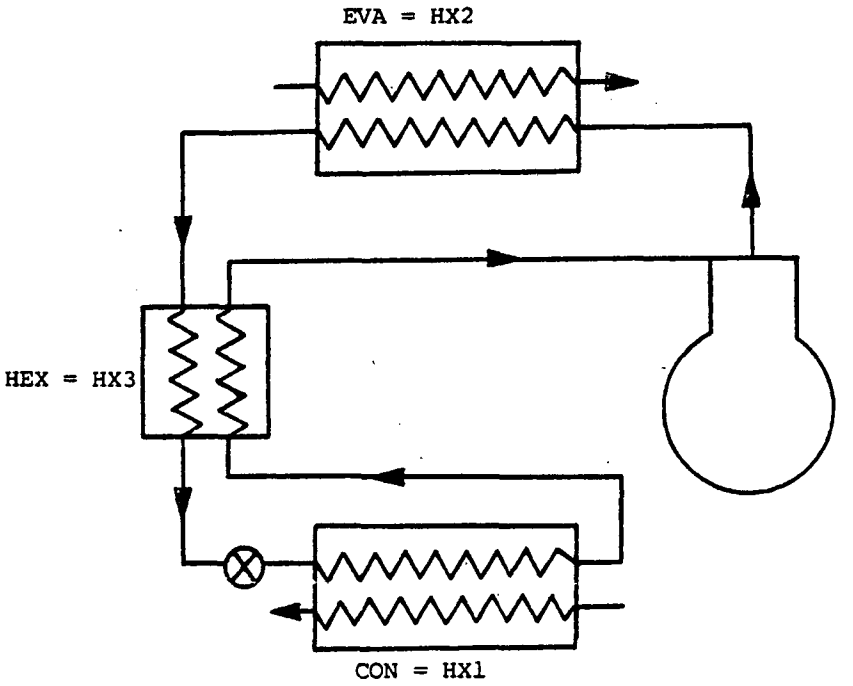


Figure 5.1 One condenser, one evaporator and one refrigerant-to-refrigerant heat exchange refrigeration unit.

By analogy with the simpler problem one can define an average and a "relative gradient", direction of improvement tangent to the constraint.

$$Av = \left(\sum_{i=1}^{6} b_i a_i\right) / \left(\sum_{i=1}^{6} b_i\right) \qquad (5.6)$$

$$\Delta x_i = \lambda(a_i - Av) \rightarrow \sum_{i=1}^{6} b_i \, \Delta x_i = 0$$

## 5.4 Univariant Search along the Relative Gradient--Convergence

Once its direction is determined the amplitude $\lambda$ of the move is still to be chosen. A logical way to choose $\lambda$ is to find the minimum of the function $P(\lambda) = f(x_1 + \lambda\Delta x_1, \ldots, x_6 + \lambda\Delta x_6)$ with $\Delta x_i = a_i - Av$. To perform this univariant search along the relative gradient two mehods were tried: the "dichotomous" search and the "exhaustive" search (Reference 3, 9.3 and 9.6). The dichotomous search did not give very good results because to compute the new power after a change in the $x_i$'s (conc, Ael, $Ax_1$, $Ax_2$, Acl, Ach) a simulation has to be carried out starting from the V's corresponding to the former set of conc,...,Ach. The time to compute the new V's (and the chance of divergence) increases very fast with the amplitude of the move and it was found to be much more efficient to increment steadily $\lambda$ of a small amount as long as the power keeps on decreasing and to stop when P starts to go up or when one of the parameters is about to reach a non physical value (negative area for instance).

After the first cycle of return to the constraint followed by a univariant exhaustive search along the relative gradient the

optimization proceeds with another cycle until the optimum is reached. To make sure that the optimization is converging one may just follow the amplitude of the changes in the parameters (This is incidently how SIMUL stops the Newton-Raphson iteration) or the improvement of P. Another way to check the convergence is to compute $\frac{\partial P}{\partial \lambda} = \sum_{i=1}^{6} a_i \, (a_i - Av)$ , the "slope of the hill" at the starting point of the univariant search. Near the optimum this slope should be smaller than at the beginning of the optimization.

## 5.5 Parallelism of the Temperature Gradients

It has been pointed out at the end of Chapter 1 in Sec.1.4 that the parallelism of the temperature profiles is one way to explain the better performances of refrigerant mixtures as compared to single refrigerants (cf also Fig. 1.6). This does not mean that the temperature gradients should all be more parallel in HTC, LTC, HX1, HX2, LTE and HTE at the optimum, but that they should be "globally" more parallel. To show that, one can either sketch the temperature profiles at each step of the optimization or compute their "skewness." For instance the "skewness" of the temperature profiles in the LTC could be defined as $((t_3 - tclo) - (t_4 - (tcli))^2$. And to get a "global skewness" of the temperature profiles for the whole system one can weigh these "skewnesses" with the area of the heat exchangers before totaling them. The inverse of the global skewness could then be called the "global parallelism" of the temperature profiles. The "global parallelism" computed this way (and normalized to get values of the order of magnitude of 10) was indeed found to increase at each step of the optimization (see the sample optimization

in APPENDIX 3).

## 5.6 Comments on the "relative gradient" method

The method described in Sec. 5.3 can obviously be used to cope with any monoconstrained problem, for example if it is attempted to optimize $f(x_1,\ldots,x_n)$ subject to $\gamma(x_1,\ldots,x_m) = 0$ knowing $\frac{\partial f}{\partial x_i} = a_i$ and $\frac{\partial \gamma}{\partial x_i} = b_i$ $(i = 1,\ldots,n)$ and starting from a feasible point, the move $\Delta x_i = \lambda\ (a_i - Av)$ with $A_v = (\sum_{i=1}^{n} b_i a_i)/(\Sigma\ b_i)$ is a good guess of the best way to improve f tangentially to the constraint. It can also be easily generalized if the problem is multiconstrained by alterning moves tangent to a constraint and another with returns to the intersection of all constraints, changing of constraint every time.

Another possible method to get a move tangent to the constraint $\sum_{i=1}^{n} b_i\ \Delta x_i = 0$ is to choose arbitrarily one change of variable $\Delta x_j$, to compute it in terms of the others, and to compute a new gradient in terms of the other variables

$$\Delta x_j = \sum_{\substack{i=1 \\ i\neq j}}^{n} \left(-\frac{b_i}{b_j}\right) \Delta x_i$$

$$\Delta f = \sum_{i=1}^{n} a_i\ \Delta x_i$$

$$= \sum_{i=1}^{n} \left(a_i - a_j \frac{b_i}{b_j}\right) \Delta x_i$$

and the move $x_i \to x_i + \lambda(a_i - a_j \frac{b_i}{b_j})$, $(i \neq j)$

$$x_j \rightarrow x_j + \lambda \sum_{\substack{i=1 \\ i \neq j}}^{n} \left(-\frac{b_i}{b_j}\right) \Delta x_i$$

is tangent to the constraint.

However there is no easy way to decide which $\Delta x_j$ to substitute, this method does not seem to have any obvious physical interpretation (as the one developed in Sec. 5.3) and it is not as easy to program. For these reasons it has not been used in this work.

In the case of the simulation of the facility, the "relative gradient" method was found to converge much faster than the third alternate way of optimizing one parameter at a time along the constraint (which should be true in most cases since all parameters are improved at a time).

However, difficulties can arise when the parameters do not have the same physical meaning. For example, in Eq. (5.6), $b_2, b_3, \ldots, b_6$ are dimensionless but $b_1$ is an area divided by a concentration and adding them is not very satisfactory with respect to the homogeneity. The way this difficulty was altering the results was that the correct area distribution was found with two incorrect concentrations. The problem could probably have been solved by an adequate (but arbitrary) weighting of the $a_i$'s (and $b_i$'s) but, instead, it was chosen to optimize first the concentration along the constraint and then to optimize the area distribution at constant concentration. Based on this experience it does not seem to be a good idea to try to optimize parameters having a different physical sense at one time, when using this

method.

The "relative gradient" method is in fact very close to the "projected gradient" method (Beveridge and Schelchter, Optimization: Theory and Practice, p. 435). In that method the move tangent to the constraint is:

$$\Delta x_i = \lambda(a_i - b_i \frac{\Sigma a_j b_j}{\Sigma b_j^2})$$

instead of

$$\Delta x_i = \lambda(a_i - \frac{\Sigma a_j b_j}{\Sigma b_j})$$

For $b_i$'s equal to one (simpler problem), they both give the same move. The "projected gradient" method gave the same results as the "relative gradient" method, with the same efficiency, when tried on the optimization of the facility.

## 5.7 Result of the Optimization--The Program REFMIX5

The technique described in preceeding sections has been used in the program REFMIX5 (APPENDIX 2) to optimize the system according to the definition of Sec. 5.1 with

DAT(7) = Wgel = 0.06 kg/s

DAT(8) = Wgeh = 0.03 kg/s

DAT(9) = Wclt = 0.1 kg/s

DAT(10) = Wcht = 0.1 kg/s

DAT(11) = Qelt = 2 kw

DAT(12) = Qeht = 1 kw

DAT(13) = tcli = 25 °C

DAT(14) = tchi = 25 °C

DAT(15) = teli = -15 °C

DAT(16) = tehi = -10 °C

DAT(17) = sphx = 5 °C

(The underlined parameters define the refrigeration duty). The reader should note that the load on the HTE is half of the load on the LTE and that the flow rates of glycol are proportioned accordingly.

An accepted drawback of this technique, as of all types of "hill-climbing" techniques, is that one can never be sure to reach the absolute optimum. However the chances of always getting the same relative optimum with different trial points are slim and a good coverage of the feasible region permits drawing relatively safe conclusions.

Three examples of optimization are summed up in Table 5.1 one of them being detailed in APPENDIX 3. The three final points suggest that the optimum for the given set of fixed parameters and for a total area of 1.5 $m^2$ is:

$conc^* = 0.68$

$Ael^* = 0.40\ m^2$

$Aeh^* = 0.20\ m^2$

$Ax_1^* = 0.06\ m^2$

Table 5.1 Examples of Optimization

| Initial Feasible Point | | | | | | | | Corresponding Final Point Reached | | | | | | | |
|---|---|---|---|---|---|---|---|---|---|---|---|---|---|---|---|
| | $m^2$ | | | | | | kw | | $m^2$ | | | | | | kw |
| conc | Ael | Ach | AX1 | AX2 | Acl | Ach | P | conc | Ael | Ach | AX1 | AX2 | Acl | Ach | P |
| 0.4 | 0.346 | 0.132 | 0.127 | 0.098 | 0.382 | 0.432 | 1.189 | 0.682 | 0.408 | 0.193 | 0.063 | 0.020 | 0.384 | 0.431 | 1.145 |
| 0.8 | 0.311 | 0.130 | 0.125 | 0.081 | 0.421 | 0.421 | 1.175 | 0.692 | 0.399 | 0.189 | 0.06 | 0.021 | 0.45 | 0.416 | 1.145 |
| 0.145 | 0.389 | 0.093 | 0.137 | 0.087 | 0.391 | 0.391 | 1.259 | 0.683 | 0.408 | 0.194 | 0.061 | 0.019 | 0.368 | 0.433 | 1.145 |

$Ax_2^* = 0.02\ m^2$

$Acl^* = 0.40\ m^2$

$Ach^* = 0.42\ m^2$

and gives a power of 1.145 kw.-

Once the optimum is found, an important question to be raised is: "How flat is the surface $f(x_1,\ldots,x_6)$ at the optimum $x_1^*,\ldots,x_6^*$?". For instance, if it is found that P is not very sensitive to a slight modification of the distribution of area, the system might work almost as well without $HX_2$ ($Ax_2^* = 0.02\ m^2$, only 1% of the total area) and even without HX1 ($Ax_2^* = 0.06\ m^2$ = 4% of the total area). Feasible points generated in the neighborhood of the optimum showed that with:

conc = 0.7

$Ael = 0.42\ m^2$

$Ax_1 = 0.06\ m^2$

$Ax_2 \simeq 0.00\ m^2$

$Acl = 0.42\ m^2$

$Ach = 0.42\ m^2$

The power becomes 1.146 kw (instead of 1.145 kw) and with

conc = 0.7

$Ael = 0.43\ m^2$

$Aeh = 0.21\ m^2$

$Ax_1 \simeq 0.00\ m^2$

$Ax_2 = 0.00\ m^2$

Acl = 0.43 $m^2$

Ach = 0.43 $m^2$

The power is 1.19 kw. Therefore the influence of the second heat exchanger HX2 is negligible and the first heat exchanger $HX_1$ yields an improvement of 3.3%. another important point is that the repartition of area between LTE, LTC and HTC is not very crucial and, for the given set of fixed parameters, they can be taken as equal.

The purpose of this study being to determine the improvement that can be expected from the use of a mixture of refrigerant, the next logical step is to optimize the distribution of area for a system using pure R12 and to compare the results with the ones above. Figure 5.2 shows the power consumed at a concentration conc by a system optimized at this concentration. For conc $\simeq$ 0 (pure R12) the optimal repartition area was found to be

conc $\simeq$ 0.00

Ael = 0.46 $m^2$

Aeh = 0.12 $m^2$

$Ax_1$ $\simeq$ 0.00 $m^2$

$Ax_2$ $\simeq$ 0.00 $m^2$

Acl = 0.46 $m^2$

Ach = 0.46 $m^2$

and gives a power of 1.26 kw. Therefore an optimized system using a mixture of R12-R114 gives a potential improvement of 9% with respect to an optimized system using pure R12 with the same total heat exchange area of 1.5 $m^2$ and in the considered

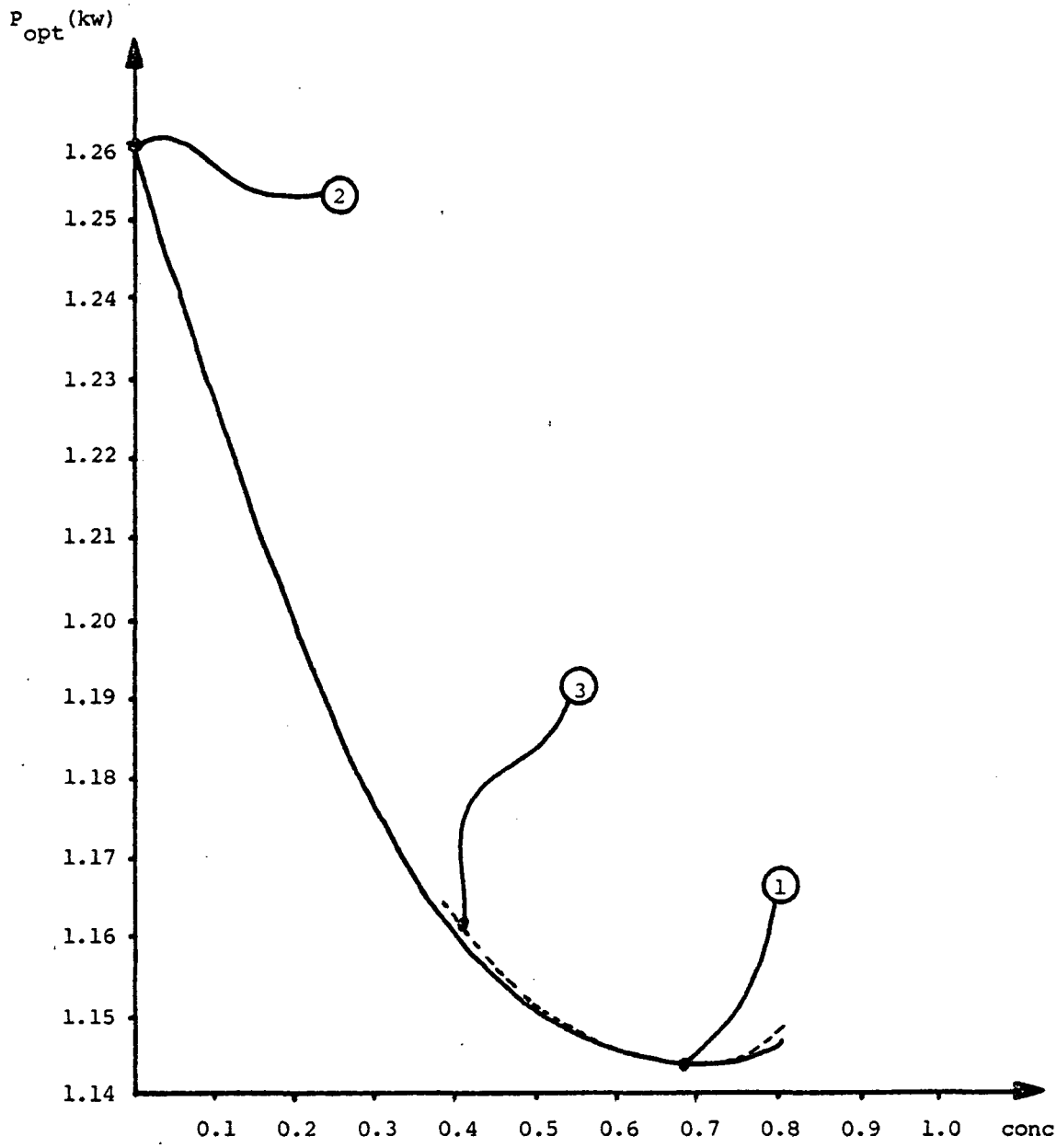


Figure 5.2 Power as a function of the mass concentration of R114 for a system optimized at this concentration (the total heat exchange area is held constant and equal to $1.5m^2$). The meaning of the symbols is given in Table 5.2.

(1) Absolute optimum:

$conc^* = 0.68$

$Ael^* = 0.40\ m^2$

$Aeh^* = 0.20\ m^2$

$AX_1^* = 0.06\ m^2$

$AX_2^* = 0.02\ m^2$

$Acl^* = 0.40\ m^2$

$Ach^* = 0.42\ m^2$

(2) Optimum with pure R12

$Ael = 0.46\ m^2$

$Aeh = 0.12\ m^2$

$AX_1 \simeq 0.00\ m^2$

$AX_2 \simeq 0.00\ m^2$

$Acl = 0.46\ m^2$

$Ach = 0.46\ m^2$

(3) Power as a function of conc for a constant "almost optimized" area distribution of:

$Ael = 0.42\ m^2$

$Aeh = 0.18\ m^2$

$AX_1 = 0.06\ m^2$

$AX_2 \simeq 0.00\ m^2$

$Acl = 0.42\ m^2$

$Ach = 0.42\ m^2$

Table 5.2 Symbols used in Figure 5.2.

conditions (p. 52). It is interesting to note that, with pure R12, both $HX_1$ and $HX_2$ not only do not help the system but are even slightly detrimental to its efficiency.

Apart from the low values of $Ax_1$ and $Ax_2$, another interesting feature of the optimum is the value of the optimal concentration found to be $conc^* = 0.68$. Recalling from Chapter 1 that we expect parallel temperature profiles in the evaporators and condensers at the optimum, one value greater than 0.5 only is surprising. The maximum temperature change during the evaporation or condensation of a refrigerant mixture is achieved near conc = 0.5 (see Fig. 5.3). Consequently one would expect either one optimum at 0.5 or two optima at concentrations symmetrical with respect to 0.5. This latter situation would be expected if the temperature profiles of the external fluids are not very steep and in this case the curve of fig. 5.2 would be "camel-shaped". However the parallelism of the profiles is not the only variable that influences the power. For instance if the maximum condensing temperature of the refrigerant drops more than the minimum evaporating temperature the surface enclosed by the cycle in a T-s diagram (which represents the power in an ideal system) decreases. As pointed out in Reference 8 (see Chapter 2) a lower discharge temperature of the compressor is indeed expected as the concentration of R114 increases. Whatever the proper explanation, if the temperature gradients of the external fluids are made steeper (by decreasing the flow rates) the optimal concentration should decrease toward 50%. The suggested study has been carried out and the expected shift was

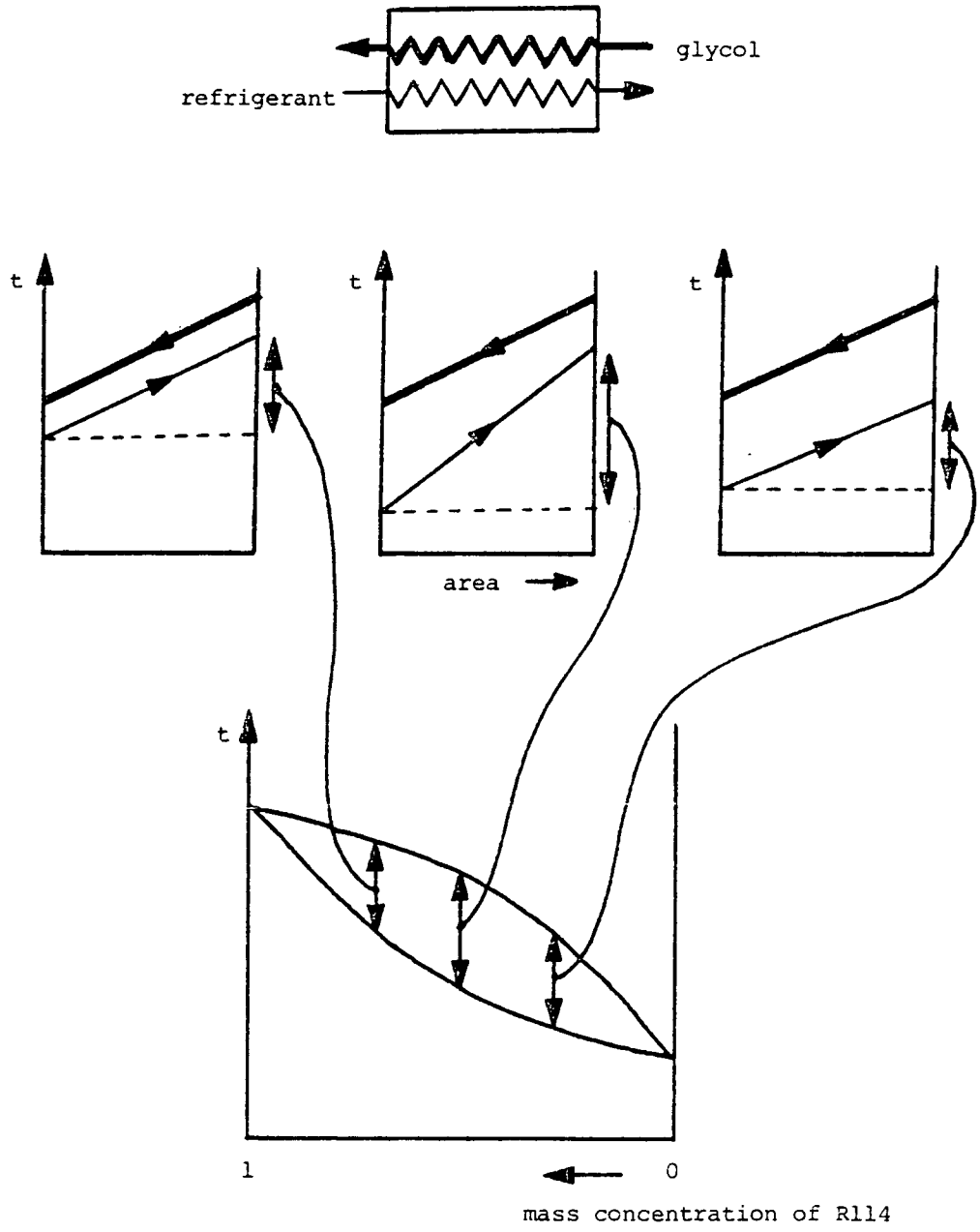


Figure 5.3 Temperature profiles in an evaporator with different concentrations. For the purpose of discussion the pressure is assumed to be constant.

observed (but was found to be very small). With

Wgel = 0.06 kg/s

Wgeh = 0.03 kg/s

Wclt = 0.0 kg/s

Wcht = 0.1 kg/s

the average temperature change in the external fluids is 7.6°C, the optimal concentration is 0.68 and the corresponding power is 1.14 kw. With

Wgel = 0.03 kg/s

Wgeh = 0.015 kg/s

Wclt = 0.05 kg/s

Wcht = 0.05 kg/s

the average temperature change in the external fluids is 15.6°C, the optimal concentration is 0.66 and the power is 1.51 kw. The system using pure R12 was also optimized with these new flow rates and the optimal power was 1.73 kw. In this case a refrigerant mixture system gives an improvement of 13% instead of 9% with the previous flow rates and it is confirmed that the greater the temperature change of the external fluids, the more advantageous a refrigerant mixture unit.

To conclude these remarks on the optimal concentration it should be noted that the reduction of the power is not the only criterion. It might also be desirable to operate at a lower concentration of R114 because the greater this concentration the lighter the mixture. A low density mixture could require a greater displacement rate of the compressor (most compressors are

designed for R12 by far the most widely used refrigerant). As can be seen from Figure 5.2 between 40% and 70% the power reduces only 1.4%. For these reasons the mixture 40% R114-60% R12 (mass percentage) might still be the best choice.

# 6. CONCLUSION AND RECOMMENDATIONS FOR FUTURE WORK

## 6.1 Experimental Work

At this point in time the facility has run satisfactorily with pure R12, i.e. the conditions of imposed superheat at point 1 and saturated liquid at point 4 could be met. Unfortunately, some of the heat balances gave an error greater than 10%, which can be considered a limit before proceeding to experiments with a mixture. Some of the suspected instruments (low pressure gauges, rotameters, venturi) might have to be recalibrated and even replaced before reliable data can be obtained. However, one can already give a few comments on the preliminary experiments:

1. The first results with pure R12 seem compatible with the simulation program.
2. Getting the specified refrigeration duty in both evaporators with different refrigerant concentrations is probably going to be very difficult. It might be advisable to try first to make runs with one evaporator.
3. Once acquainted with the facility we should try to design a methodical procedure to run the experiments (with a check list) and to find a convenient way to

store the data in order to make the analysis easier (flow diagram, developed through computer graphics, showing the state points throughout the cycle , for example).

4. When the experimental data can be considered reliable, the simulation program should be modified to take the results into account.

## 6.2 Analytical work

According to the simulation, our test facility running with a mixture of 70% R114 - 30% R12 (mass percentage) should require about 7% less power than running with pure R12 and performing the same refrigeration duty.

A system of the total heat transfer area of our facility but with an optimized distribution of heat exchange area and using a mixture of R12 - R114 should give an improvement of about 9% with respect to an optimized system using pure R12 of the same total heat transfer area.

The optimization also showed that the facility could work as well without the second heat exchanger HX2. It would be useful to check if this conclusion still holds for different systems and to study the evolution of the optimal distribution of area when the other parameters (flow rates of external fluids, heat load on evaporators etc...)vary. An example of such a study is given at the end of Sec. 5.7.

It would also be interesting to know what set of such parameters gives the best improvement based on an optimized system using pure R12 (the optimization showed that with pure R12 the best system does not include any refrigerant to refrigerant heat exchanger). This study would, in other words, answer the question: "For what kind of system is it most advisable to use a mixture of refrigerants instead of a pure one?". The same studies could be carried out investigating different mixtures as suggested in Reference 1, p. 14-15. These studies should be aimed at pointing out simple information and "rules of thumb" to help the task of a future designer of refrigerant mixture units.

At a more practical level the efficiency of the program REFMIX5 could be improved by the following steps:

1. Change the order of the equations and of the variables in subroutine EQNS in order to have a more diagonal Jacobian (the equations have been grouped this way in the first place for readability purposes and to be easier to be checked and modified).
2. Modify SYSSIM1 so that ITER is an output variable and the residuals can be written in a readable fashion without having to redefine the variables whenever EQNS is called. (Lines 49-90 of EQNS)
3. Try other routines available on CYBER: MINPACK instead of SYSSIM and LINV3F, of IMSL, instead of GAUSSY (which forces the resetting of R and PD and the investion of PD after every call to SIMUL).

# LIST OF REFERENCES


1. Stoecker, W. F., "Improving the energy effectiveness of domestic refrigerators by the application of refrigerant mixtures," September 1978, University of Illinois, for the Oak Ridge National Laboratory operated by Union Carbide Corporation for the United States Department of Energy.

2. Stoecker, W. F., "A generalized program for steady-state system simulation", ASHRAE transactions, Vol. 77, Part i, pp. 140-148, 1971.

3. Stoecker, W. F., Design of thermal systems, McGraw-Hill Book Company.

4. Bougard, J. D. F., and Jabot, R. H. E., "Calculating the state variables of halogenated hydrocarbons and halogenated hydrocarbon mixtures using the virial equation of state and the Kihara interaction potential," Paper No. B1-62, XV Int. Congress of Refrig., Venice, Sept. 1979.

5. Cooper, W. D., and Borchardt, H. J., "The use of refrigerant mixtures in air-to-air heat pumps," Paper No. E1-60, XV Int. Congress of Refrig., Venice, Sept. 1979.

6. Doring, R., and Knapp, H., "Thermodynamic properties of mixtures of fluorinated hydrocarbons," Paper No. B1-76,, XV Int. Congress of Refrig., Venice, Sept. 1979.

7. Do vuong, T., and Straub, J. "An experimental investigation of the surface tension and refractive index of binary ltures," Paper No. B1-9, XV Int. Congress of Refrig., Venice, Sept. 1979.

8. Jakobs, R., and Kruse, H., "The use of non azeotropic refrigerants mixtures in heat pumps for energy savings", Paper No. 79-1068, XV Int. Congress of Refrig., Venice, Sept. 1979.

9. Jungnickel, H., Wassilew, P. and Kraus, W. E., "Investigations into heat transfer in boiling binary refrigerant mixtures", Paper No. B1-97, XV Int. Congress of Refrig., Venice, Sept. 1979.

10. Kaiser, V., Salhi, O., and Polcini, C., "Analyse mixed refrigerant cycles", Paper No. 79-0435, XV Int. Congress of Refrig., Venice, Sept. 1979.

11. Kasachki, G., "Two aspects of the practical applications of non azeotropic refrigerants," Paper No. B1-89., XV Int. Congress of Refrig., Venice, Sept. 1979.

12. Kraus, W. E., and Vollmer, D., "Thermodynamic diagrams for non azeotropic refrigerant mixtures," Paper No. B1-48, XV Int. Congress of Refrig., Venice, Sept. 1979.

13. Kraus, W. E., and Vollmer, D., "Application on the Redlich-Kwong equation of state to halogenated refrigerants and their mixtures," Paper No. 79-1715, XV Int. Congress of Refrig., Venice, Sept. 1979.

14. Saluja, S. N., James, R. W., and Cryne, A., "Problems in the use of mixed refrigerants," Paper no. 78-1801, XV Int. Congress of Refrig., Venice, Sept. 1979.

15. Takaishi, Y., and Uematsu, M., "Measurements of the $PVT_x$ properties of binary refrigerants", Paper No. B1-36.

# APPENDIX 1

## Listing of the Subroutine EQNS

```
      SUBROUTINE EQNS(NVAR,V,R)
C     ************************
      DIMENSION  V(NVAR),R(NVAR),DAT(17)
      COMMON DAT
C
C
CC    DEFINING USEFUL FUNCTIONS (SAT.PRESS.,ENTHALP.,ETC.......)
C
C
      P12S(T) =EXP(14.861 - 2498.3/((T)+273.15))
      P114S(T)=EXP(15.407 - 2993.2/((T)+273.15))
      H12V(T) =351.48 + .42825*(T) - .00071*(T)**2 - .0000051*(T)**3
      H114V(T)=337.41 + .6234*(T) + .000086*(T)**2 - .00000385*(T)**3
      H12L(T) =200. + .9251*(T) + .00081*(T)**2 + .0000048*(T)**3
      H114L(T)=200. + .9545*(T) + .00116*(T)**2 + .000003*(T)**3
      AMOLF(X)=(X)/(1.4135 - 0.4135*(X))
      AMASF(X)=1.4135*X/(1.+0.4135*X)
      XCL(P,T)=(P-P12S(T)) / (P114S(T)-P12S(T))
      XCV(P,T,X)=P114S(T)*X/P
C
C-----WORK OF ISENTROPIC COMPRESSION FOR R12 & R114
      C2N1(T,P)=(T + 273.15)*((.6933E-1 + .232E-4*T) +
     *          (-.2019E-4 + .797E-7*T)*P)
      C2N2(T,P)=(T + 273.15)*((.414E-2 - .148E-4*T) +
     *          (-.876E-5 + .231E-6*T)*P)
      WI2(T,P1,P2)=(C2N1(T,P1) + C2N2(T,P1)*ALOG(P2/P1))*ALOG(P2/P1)
      C4N1(T,P)=(T + 273.15)*((.4949E-1 + .36E-5*T) +
     *          (-.3024E-4 + .4083E-6*T)*P)
      C4N2(T,P)=(T + 273.15)*((.75E-3 + .285E-4*T) +
     *          (.428E-5 + .365E-6*T)*P)
      WI4(T,P1,P2)=(C4N1(T,P1) + C4N2(T,P1)*ALOG(P2/P1))*ALOG(P2/P1)
```

```
C
C-----ENTHALPY OF SUPERHEATED VAPOR OF R12 & R114
      PP4(P)=(P-251.66)/244.77
      PP2(P)=(P-609.81)/554.19
      TP4(T)=(T-10.)/55.556
      TP2(T)=(T-10.)/50.
      A4(P) =341.528 - 4.400*PP4(P) - .432*PP4(P)**2
      B4(P) = 39.811 + 2.054*PP4(P) + .282*PP4(P)**2
      C4(P) =  1.475 -  .535*PP4(P) + .012*PP4(P)**2
      H4SH(P,T)=A4(P) + B4(P)*TP4(T) + C4(P)*TP4(T)**2
      A2(P) =351.740 - 12.954*PP2(P) - 2.367*PP2(P)**2
      B2(P) = 35.957 +  8.406*PP2(P) + 2.484*PP2(P)**2
      C2(P) =  -.619 -  2.379*PP2(P) -  .748*PP2(P)**2
      H2SH(P,T)=A2(P) + B2(P)*TP2(T) + C2(P)*TP2(T)**2
C
CC     REDEFINING V(I) TO MAKE EQUATIONS EASIER TO UNDERSTAND
C
      W   =V(1)
      PHI =V(2)
      PLO =V(3)
      T1  =V(4)
      T1P =V(5)
      T2  =V(6)
      T2P =V(7)
      T3  =V(8)
      T4  =V(9)
      T4P =V(10)
      T5  =V(11)
      T6  =V(12)
      T7  =V(13)
      T8  =V(14)
```

```
      T9  =V(15)
      T10 =V(16)
      H1  =V(17)
      H2  =V(18)
      H3  =V(19)
      H4  =V(20)
      H5  =V(21)
      H6  =V(22)
      H7  =V(23)
      H8  =V(24)
      H9  =V(25)
      H10 =V(26)
      FRL7=V(27)
      FRL8=V(28)
      FRL9=V(29)
      FR10=V(30)
      FRL3=V(31)
      FAC =V(32)
      FAX =V(33)
      QCLT=V(34)
      QCHT=V(35)
      TCHP=V(36)
      AEH =V(37)
      TELO=V(38)
      TEHO=V(39)
      TCLO=V(40)
      TCHO=V(41)
      P   =V(42)
C
CC    IMPOSED PARAMETERS
C
```

```
      CONC=DAT(1)
      AEL =DAT(2)
      AX1 =DAT(3)
      AX2 =DAT(4)
      ACL =DAT(5)
      ACH =DAT(6)
      WGEL=DAT(7)
      WGEH=DAT(8)
      WCLT=DAT(9)
      WCHT=DAT(10)
      QELT=DAT(11)
      QEHT=DAT(12)
      TCLI=DAT(13)
      TCHI=DAT(14)
      TELI=DAT(15)
      TEHI=DAT(16)
      SPHX=DAT(17)
C
CC    PRELIMINARY COMPUTATIONS
C
C-----MASS CONCENTRATION OF R114 IN LIQ. & VAP. AT 3,7,8,9,10
      XCL7=XCL(PLO,T7)
      XCL8=XCL(PLO,T8)
      XCL9=XCL(PLO,T9)
      XCL10=XCL(PLO,T10)
      XCL3=XCL(PHI,T3)
      XL7 =AMASF(XCL7)
      XL8 =AMASF(XCL8)
      XL9 =AMASF(XCL9)
      XL10=AMASF(XCL10)
      XL3 =AMASF(XCL3)
```

```
      XV7 =AMASF(XCV(PLO,T7,XCL7))
      XV8 =AMASF(XCV(PLO,T8,XCL8))
      XV9 =AMASF(XCV(PLO,T9,XCL9))
      XV10=AMASF(XCV(PLO,T10,XCL10))
      XV3 =AMASF(XCV(PHI,T3,XCL3))
C
C-----MOLE CONCENTRATION OF R114 IN VAP. AT 1P,2P & LIQ. AT 4
      XCV1P=XCV(PLO,T1P,XCL(PLO,T1P))
      XCL4 =XCL(PHI,T4)
      XCV2P=XCV(PHI,T2P,XCL(PHI,T2P))
C
C-----ENTHALPIES OF LIQ. & VAP. AT 3,7,8,9,10 (2-PHASE REGION)
      HL7 =XL7*H114L(T7) + (1.-XL7)*H12L(T7)
      HL8 =XL8*H114L(T8) + (1.-XL8)*H12L(T8)
      HL9 =XL9*H114L(T9) + (1.-XL9)*H12L(T9)
      HL10=XL10*H114L(T10) + (1.-XL10)*H12L(T10)
      HL3 =XL3*H114L(T3) + (1.-XL3)*H12L(T3)
      HV7 =XV7*H114V(T7) + (1.-XV7)*H12V(T7)
      HV8 =XV8*H114V(T8) + (1.-XV8)*H12V(T8)
      HV9 =XV9*H114V(T9) + (1.-XV9)*H12V(T9)
      HV10=XV10*H114V(T10) + (1.-XV10)*H12V(T10)
      HV3 =XV3*H114V(T3) + (1.-XV3)*H12V(T3)
C
C-----PARTIAL PRESSURES OF R12 & R114 IN SUPERHEATED REGION
      PP4H=AMOLF(CONC)*PHI
      PP2H=PHI - PP4H
      PP4L=AMOLF(CONC)*PLO
      PP2L=PLO - PP4L
C
C-----WORK OF COMPRESSION
      E12 =WI2(T1,PP2L,PP2H)
```

```
      E114=WI4(T1,PP4L,PP4H)
      ETA =.75
C
C-----CP'S OF LIQUIDS
      CPGL=3.324 + .0046*(TELI+TELO)/2.
      CPGH=3.324 + .0046*(TEHI+TEHO)/2.
      CPWA=4.19
C
C-----UA VALUES
      ACO =FAC*ACM
      ADS =(1.-FAC)*ACM
      UCO =1.
      UDS =0.2
      UEV =1.1
      UACO=UCO*ACO
      UADS=UDS*ADS
      UAEH=UEV*AEH
      AEX=FAX*AX1
      ASX=(1.-FAX)*AX1
      UHX=1.2
      USX=.8
      UAEX=UHX*AEX
      UASX=USX*ASX
      UAEL=UEV*AEL
      UACL=UCO*ACL
      UAX2=UHX*AX2
C
CC    COMPUTING RESIDUALS
C
C-----FRACTION OF LIQ. PHASE AT 3,7,8,9,10
      R(1) =-CONC + FRL7*XL7 + (1.-FRL7)*XV7
```

```
C
      R(2) =-CONC + FRL8*XL8 + (1.-FRL8)*XV8
C
      R(3) =-CONC + FRL9*XL9 + (1.-FRL9)*XV9
C
      R(4) =-CONC + FR10*XL10 + (1.-FR10)*XV10
C
      R(5) =-CONC + FRL3*XL3 + (1.-FRL3)*XV3
C
C-----ENTHALPIES AT 3,7,8,9,10
      R(6) =-H7 + FRL7*HL7 + (1.-FRL7)*HV7
C
      R(7) =-H8 + FRL8*HL8 + (1.-FRL8)*HV8
C
      R(8) =-H9 + FRL9*HL9 + (1.-FRL9)*HV9
C
      R(9) =-H10 + FR10*HL10 + (1.-FR10)*HV10
C
      R(10)=-H3 + FRL3*HL3 + (1.-FRL3)*HV3
C
C-----ENTHALPIES AT 4,5,6
      R(11)=-H5 + CONC*H114L(T5) + (1.-CONC)*H12L(T5)
C
      R(12)=-H6 + CONC*H114L(T6) + (1.-CONC)*H12L(T6)
C
      R(13)=-H4 + CONC*H114L(T4) + (1.-CONC)*H12L(T4)
C
C-----HEAT EXCHANGER EQUATIONS
      R(14)=-QCLT + UACL*((T3-TCLO)-(T4-TCLI))/
     *       ALOG((T3-TCLO)/(T4-TCLI))
C
```

```
      R(15)=-QCHT*(TCHO-TCHP)/(TCHO-TCHI) + UAOS*((T2-TCHO)-
     *       (T2P-TCHP))/ALOG((T2-TCHO)/(T2P-TCHP))
C
      R(16)=-QCHT*(TCHP-TCHI)/(TCHO-TCHI) + UACO*((T2P-TCHP)-
     *       (T3-TCHI))/ALOG((T2P-TCHP)/(T3-TCHI))
C
      R(17)=-QELT + UAEL*((TELI-T8)-(TELO-T7))/
     *      ALOG((TELI-T8)/(TELO-T7))
C
      R(18)=-QEHT + UAEH*((TEHI-T10)-(TEHO-T9))/
     *       ALOG((TEHI-T10)/(TEHO-T9))
C
      R(19)=-W*(H1-H10)*(T4-T4P)/(T4-T5) + UASX*((T4-T1)-(T4P-T1P))/
     *       ALOG((T4-T1)/(T4P-T1P))
C
      R(20)=-(T4P-T1P) + (T5-T10)*EXP(UAEX*((T4P-T1P)-(T5-T10))*
     *       (T4-T5)/(W*(H1-H10)*(T4P-T5)))
C
      R(21)=-(T5-T9) +
     *       (T6-T8)*EXP(UAX2*((T5-T9)-(T6-T8))/(W*(H9-H8)))
C
C-----SATURATION CONDITIONS
      R(22)=-AMOLF(CONC) + XCV1P
C
      R(23)=-AMOLF(CONC) + XCL4
C
      R(24)=-AMOLF(CONC) + XCV2P
C
C-----HEAT BALANCES
      R(25)=-QELT + W*(H8-H7)
C
```

```
      R(26)=-H6 + H7
C
      R(27)=-QCHT + W*(H2-H3)
C
      R(28)=-QCLT + W*(H3-H4)
C
      R(29)=-QCLT - QCHT + P + QELT + QEHT
C
      R(30)=-(H1-H10) + (H4-H5)
C
      R(31)=-QEHT + W*(H10-H9)
C
      R(32)=-(H5-H6) + (H9-H8)
C
C-----MISCELLANEOUS
      R(33)=-H2 + CONC*H4SH(PP4H,T2) + (1.-CONC)*H2SH(PP2H,T2)
C
      R(34)=-P + W*(CONC*E114 + (1.-CONC)*E12)/ETA
C
      R(35)=-H1 + CONC*H4SH(PP4L,T1) + (1.-CONC)*H2SH(PP2L,T1)
C
      R(36)=-(H4-H5)*(T4-T4P)/(T4-T5) +
     *       (H1 - CONC*H114V(T1P) - (1.-CONC)*H12V(T1P))
C
      R(37)=-QCHT*(TCHO-TCHP)/(TCHO-TCHI) +
     *       W*(H2-CONC*H114V(T2P)-(1.-CONC)*H12V(T2P))
C
      R(38)=-QELT + WGEL*CPGL*(TELI-TELO)
C
      R(39)=-QEHT + WGEH*CPGH*(TEHI-TEHO)
C
```

```
      R(40)=-SPHX + (T1 - T1P)
C
      R(41)=-QCLT + WCLT*CPWA*(TCLO-TCLI)
C
      R(42)=-QCHT + WCHT*CPWA*(TCHO-TCHI)
C
      RETURN
      END
```

# APPENDIX 2

## Listing of the Program REFMIX5

## followed by a Line by Line Explanation

```
      PROGRAM REFMIXS(TAPE1,OUTPUT,TAPE6=OUTPUT)
C     ******************************************
C
C     PROGRAM TO SIMULATE AND OPTIMIZE A 2-EVAPORATORS, 2-CONDENSERS
CC    2-HEAT EXCHANGERS REFRIGERATION UNIT USING A NON AZEOTROPIC
CCC   MIXTURE OF REFRIGERANTS, FOR EXTENSIVE DETAILS (FLOW DIAGRAM
CCCC  DERIVATION OF EQUATIONS, OPTIMIZATION METHOD, ETC.,.,) REFER TO
CCC   P.F. LAUNAY "IMPROVING THE EFFICIENCY OF REFRIGERATORS AND HEAT
CC    PUMPS BY USING A NON AZEOTROPIC MIXTURE OF REFRIGERANTS" (MASTERS
C     THESIS REPORT,U OF I,1980)
C
      DIMENSION V(42),DES(42),R(42),PD(42,42),VCORR(42),VO(42),RO(42),
     * WKAREA(50),DAT(17),DATN(17),CF(42,42),SC(17,42),VP(42),
     * UNITO(17),UNITV(42)
      COMMON DAT
       NVAR=42
        NOPT=5
         TLRNCE=0.001
          ITMAX =15
           IFOP=0
            IFPI=0
             IFPP=0
              IFPL=0
               IDGT=0
                AINC=.1
                 IMSH=8
C
CC    READING THE TRIAL VALUES STORED IN TAPE1 (WHEN RUNNING
CC    ON CYBER "/LGO,TAPE1,OUTPUT")
C
      REWIND 1
```

```
0032          READ (1,10)
0033           READ (1,12) (DATN(I),DAT(I),UNITD(I),I=1,17)
0034            READ (1,10)
0035             READ (1,11) (DES(I),V(I),UNITV(I),I=1,NVAR)
0036 C
0037 CC     OPTIMIZATION BY HEMSTICHING OPTIMIZING FIRST THE CONCENTRATION
0038 CCC    ALONG THE  CONSTRAINT IF POSSIBLE AND THEN DETERMINING THE
0039 CC     OPTIMAL REPARTITION OF AREA ALONG THE RELATIVE GRADIENT AT CST CONC
0040 C
0041        ITOPT=0
0042         PRINT 19,ITOPT,(K,DATN(K),DAT(K),UNITD(K),K=1,17)
0043          PRINT 17,(I,DES(I),V(I),UNITV(I),I=1,42)
0044   102     CONTINUE
0045        CALL SIMUL(NVAR,TLRNCE,ITMAX,V,DES,R,PD,VCORR,VD,RD,IFDP,IFPI,
0046       *  IFPP,IFPL)
0047   101 CONTINUE
0048        PREVP=V(42)
0049 C
0050 C-----IF ALREADY ON THE CONSTRAINT SKIP RETURN
0051         SA=DAT(2)+DAT(3)+DAT(4)+DAT(5)+DAT(6)+V(37)
0052          ERA=(1.5 - SA)/1.5
0053           IF (ABS(ERA) - .001) 108,107,107
0054   107      CONTINUE
0055 C
0056 CC     COMPUTING RELEVANT SC'S TO GO BACK ON CNSTRT
0057 C
0058 C-----RESETTING R'S & PD'S (MOD. BY GAUSSY) AND INVERTING PD
0059        CALL EQNS(NVAR,V,R)
0060         CALL PARDIF(NVAR,V,R,PD,VD,RD)
0061          CALL LINV1F(PD,NVAR,NVAR,CF,IDGT,WKAREA,IER)
0062 C
```

```
C-----DEL RES./DEL PAR. => SENS. COEFF. OF P,AEM (PAR.=CONC.,...,ACH)
      DV=0.001
       DO 22 K=1,6
        DAT(K)=(1. + DV)*DAT(K)
         CALL EQNS(NVAR,V,RD)
          DO 30 J=37,42,5
           SC(K,J)=0.
            DO 30 I=1,NVAR
             SC(K,J)=SC(K,J) + ((RD(I)-R(I))/(DV*DAT(K)))*CF(J,I)
 30          CONTINUE
              DAT(K)=DAT(K)/(1. + DV)
 20            CONTINUE
                PRINT 13,(DES(J),(DATN(K),SC(K,J),K=1,6),J=37,42,5)
C
C-----DETERMINING THE AMPLITUDE OF FASTEST MOVE TO CNSTRT
      SM=0.
      DO 50 K=2,6
      SC(K,37)=SC(K,37) + 1.
      SM=SM + SC(K,37)*SC(K,37)
 50 CONTINUE
        ALBD=(1.5 - (DAT(2)+DAT(3)+DAT(4)+DAT(5)+DAT(6)+V(37)))/SM
         DO 60 K=2,6
          DAT(K)=DAT(K) + ALBD*SC(K,37)
 60        CONTINUE
            PRINT 16,(DATN(K),DAT(K),K=1,6)
      CALL SECOND(T0)
      CALL SIMUL(NVAR,TLRNCE,ITMAX,V,DES,R,PO,VCORR,VO,RD,IFDP,IFPI,
     *  IFPP,IFPL)
      CALL SECOND(T1)
       ITER=(T1 - T0)/.08
        PW=V(42)
```

```
0094          SA=DAT(2)+DAT(3)+DAT(4)+DAT(5)+DAT(6)+V(37)
0095           PRINT 15,PW,SA,ITER
0096 C
0097 C-----IF POSSIBLE OPTIMIZING CONC ALONG THE CONSTRAINT
0098   100 CONTINUE
0099        IF (ABS(SC(1,42))-.01) 105,106,106
0100   106   CONTINUE
0101          DAT(1)=DAT(1) - SC(1,42)*.5
0102           GO TO 102
0103   105      CONTINUE
0104             ITOPT=ITOPT + 1
0105 C
0106 CC    COMPUTING RELATIVE SC'S TO MIN P TGT TO CNSTRT
0107 C
0108 C-----RESETTING R'S & PD'S (MOD. BY GAUSSY) AND INVERTING PD
0109       CALL EQNS(NVAR,V,R)
0110        CALL PARDIF(NVAR,V,R,PD,VD,RD)
0111         CALL LINVIF(PD,NVAR,NVAR,CF,IDGT,WKAREA,IER)
0112 C
0113 C-----DEL RES./DEL PAR. => SENS. COEFF. OF P,AEH (PAR.=CONC,...,ACH)
0114       DV=0.001
0115        DO 21 K=1,6
0116         DAT(K)=(1. + DV)*DAT(K)
0117          CALL EQNS(NVAR,V,RD)
0118           DO 31 J=37,42,5
0119            SC(K,J)=0.
0120             DO 31 I=1,NVAR
0121              SC(K,J)=SC(K,J) - ((RD(I)-R(I))/(DV*DAT(K)))*CF(J,I)
0122    31          CONTINUE
0123                DAT(K)=DAT(K)/(1. + DV)
0124    21            CONTINUE
```

```
                    PRINT 13,(DES(J),(DATN(K),SC(K,J),K=1,6),J=37,42,5)
C
C-----COMP. THE REL. GROT, THE SLOPE AND THE MAX. VALUE OF LAMBDA
      AV=0.
      SM=0.
       DO 41 K=2,6
        AV=AV + SC(K,42)*(SC(K,37) + 1.)
         SM=SM + (SC(K,37) + 1.)
   41     CONTINUE
           AV=AV/SM
            ALBD=0.
             DPDL=0.
              DO 51 K=2,6
               DPDL=DPDL + SC(K,42)*(SC(K,42) - AV)
                SC(K,42)=SC(K,42) - AV
                 ALBD=AMAX1(ALBD,ABS(SC(K,42)/DAT(K)))
   51             CONTINUE
                   DPDL=100.*DPDL
                    PRINT 9,DPDL,(DATN(K),SC(K,42),K=2,6)
C
C-----TRYING SUCCESSIVE VALUES OF LAMBDA (UNIVARIANT SEARCH)
      ALBD=SIGN(AINC/ALBD,DPDL)
       ISCH=0
  103   CONTINUE
         ISCH=ISCH + 1
          IF (ISCH.EQ.IMSH) GO TO 65
           DO 62 I=1,NVAR
            VP(I)=V(I)
   62        CONTINUE
              DO 61 K=2,6
               DAT(K)=DAT(K) - SC(K,42)*ALBD
```

```
61            CONTINUE
      CALL SECOND(T0)
      CALL SIMUL(NVAR,TLRNCE,ITMAX,V,DES,R,PO,VCORR,VO,RO,IFDP,IFPI,
     * IFPP,IFPL)
      CALL SECOND(T1)
       ITER=(T1 - T0)/.08
        ALBDA=ALBD*ISCH
         PRINT 18,ALBDA
          P=V(42)
           SA=DAT(2)+DAT(3)+DAT(4)+DAT(5)+DAT(6)+V(37)
            PRINT 15,PW,SA,ITER
      IF(V(42) - VP(42)) 103,104,104
  104 CONTINUE
        DO 63 I=1,NVAR
          V(I)=VP(I)
   63      CONTINUE
            DO 64 K=2,6
              DAT(K)=DAT(K) + SC(K,42)*ALBD
   64          CONTINUE
   65           CONTINUE
       DELP=V(42) - PREVP
        PREVP=V(42)
         PRINT 19,ITOPT,(K,DATN(K),DAT(K),UNITD(K),K=1,17)
          PRINT 17,(I,DES(I),V(I),UNITV(I),I=1,42)
C
C-----ITERATING IF NOT AT OPTIMUM (AND ITOPT .LT. NOPT)
      IF((ITOPT.LE.NOPT).AND.(DELP.LT.0.)) GO TO 101
      GO TO 100
C
CC    END OF OPTIMIZATION , COMPUTING ALL SC'S AT OPTIMUM
C
```

```
C-----RESETTING R'S & PD'S (MOD. BY GAUSSY) AND INVERTING PD
        CALL EQNS(NVAR,V,R)
         CALL PARDIF(NVAR,V,R,PD,VD,RD)
          CALL LINV1F(PD,NVAR,NVAR,CF,IDGT,WKAREA,IER)
C
C-----PARTIAL RESIDUALS/PARTIAL PARAMETERS AND SENSITIVITY COEFF.
       DV=0.001
        DO 22 K=1,17
         DAT(K)=(1. + DV)*DAT(K)
          CALL EQNS(NVAR,V,RD)
           DO 32 J=1,NVAR
            SC(K,J)=0.
             DO 32 I=1,NVAR
              SC(K,J)=SC(K,J) + ((RD(I)-R(I))/(DV*DAT(K)))*CF(J,I)
   32          CONTINUE
                DAT(K)=DAT(K)/(1. + DV)
   22            CONTINUE
                  PRINT 14,(DATN(K),(DES(J),SC(K,J),J=1,42),K=1,17)
C
  100 CONTINUE
      STOP
    9 FORMAT(///,10X,"SLOPE ALONG THE RELATIVE GRADIENT =",F8.2,
     * //,10X,"RELATIVE GRADIENT :",/,5(30X,A4,3X,F7.5,/),//)
   10 FORMAT (/)
   11 FORMAT (9X,A4,3X,F21.5,3X,A5)
   12 FORMAT(20X,A4,3X,F8.4,3X,A5)
   13 FORMAT(///,2(10X,"VARIATION OF ",A4," PER UNIT VARIATION OF",
     * /,6(20X,A4,5X,F11.5,/),///))
   14 FORMAT(5(/),17(5X,"VARIATION OF THE UNKNOWNS FOR A UNIT ",
     * "VARIATION OF ",A4,///,42(15X,A4,3X,F11.5,/),5(/)))
   15 FORMAT(40X,"=> P = ",F8.5," & SA = ",F8.5," (ITER = ",I2," )",
```

```
     * /,40X,45("-"),//)
   16 FORMAT(///,6(20X,A4," = ",F8.4,/))
   17 FORMAT(42(1X,"V(",I2,") = ",A4," = ",F21.5,3X,A5,/),/)
   18 FORMAT(//,10X,"LAMBDA =",F11.5)
   19 FORMAT(10(/),"1",4X,"OPTIMIZATION NUMBER",I4,/,5X,23("*"),
     *  /,17(10X,"UAT(",I2,") = ",A4," = ",F8.4,3X,A5,/))
      END
```

| Line Numbers | Explanation |
|---|---|
| 12-26 | <u>Definition of arrays and option controlling variables.</u> |

V, DES, R, PD, VCORR, VD, RD, NVAR, TLRNCE, ITMAX are defined in Ref. 2. The units of the variables are stored in UNITV, IFDP, IFPI, IFPP and IFPL are new arguments of SIMUL. IFDP allows to damp the iterations by $[1 + (IFDP - 1)/(ITER)^2]$, ITER being defined in Ref. 2 (for instance if IFDP = 10, the first iteration is damped by 10, i.e. the initial V's are corrected by the VCORR's divided by 10, the second iteration is damped by 3.25, the third by 2, etc...) If IFDP = 0 there is no damping. If IFPI = 1 the detail of the iterations is printed (same as in the previous version of SYSSIM: i.e. the result of each iteration and the current value of the residuals are printed). If IFPI = 0 there is no detailed printing of iterations. If IFPP = 1 the non-zero values of PD are printed, if this is not desired let

IFPP = 0. If a printout of the last iteration only is desired let IFPL = 1, and IFPL = 0 otherwise. The modified form of SYSSIM called SYSSIM1 is stored in compiled form. (Before running REFMIX5 on CYBER: "/GET, SYSSIM1/ID = 489284904" and then "/$LIBRARY, SYSSIM1").

WKAREA and IDGT are arguments of LINV1F, the routine that inverts PD. LINV1F is an already compiled routine stored in IMSL (International Mathematical and Statistical Library). (On CYBER after having put SYSSIM1 in library type: "GRAB,IMSL". The screen should answer "GLOBAL LIBRARY SET IS SYSSIM1, ISML").

AINC is the increment of the exhaustive search along the relative gradient. AINC = 0.1 changes the most varying parameter of 10% at a time. IMSH the maximum number of incrementations. so if AINC = 0.1 and IMSH = 8 the maximum change of a parameter is 70%, preventing any area to become negative.

CF (stands for CoFactor matrix) is the inverse of PD and SC is the matrix of the sensitivity coefficients, NOPT is the maximum number of area optimizations.

The parameters, their names and their units are stored in DAT, DATN and UNITD respectively.

31-35 <u>Reading the trial values stored in TAPE1.</u>

The parameters, their names and units and the variables, their designations and their units are read from a file named TAPE1. The format of TAPE1 can be figured out from the format statements line 210,211,212 and knowing that the first parameter must be defined on line 3 of TAPE 1 and the first variable should appear on line 22.

41 Initialization of the number of optimizations of the distribution of area.

42-43 Printing the starting point.

44 Label 102 defines the beginning of the loop of concentration optimization.

45-46 Computing the variables V given the parameters DAT by Newton-Raphson iteration starting from the current array V.

47 Label 101 defines the beginning of the loop of area optimization.

48 PREVP is the power computed by the previous area optimization (to stop if there is no improvement).

51-54 <u>If already on the constraint skip return</u>.

SA is the sum of the heat exchange areas. ERA is the relative distance from the constraint (SA = 1.5 $m^2$). If ERA < 0.1% the return to the constraint (between lines 59 and 95) is skipped.

59-61 <u>Resetting the arrays R and PD and inverting PD.</u>

At the end of the Newton-Raphson iteration, Gaussy triangularies PD and modifies R and they must be reset. The inverse of PD computed by LINV1F is stored in CF.

64-75 <u>Computing the partials of the residuals with respect to conc, Ael, Axl, Ax2, Ael, Ach to compute the sensitivity coefficients of P and Aeh, according to Sec. 5.1.</u>

The parameters to be optimized are DAT(K) = 1,...6 and the interesting functions are Ach and P (V(37) and V(42)). The parameters are reset to their former values after being incremented of 0.1% to compute numerically $\frac{\partial R_i}{\partial D_k}$. The results can be printed if desired by removing the C.

78-83 <u>Determining the amplitude of the fastest move to the constraint.</u>

1 + SC(K,37) (K = 2,...6) represents the $b_i$'s and ALBD is the $\lambda$ of Sec. 5.2. The concentration is held constant.

84-87 Computing the new areas after the move of amplitude $\lambda$ along the gradient and printing them.

88-95 <u>Computing the resulting power PW and SA.</u>

The new distribution of area should of course give a total heat exchange area close to 1.5. The number of Newton-Raphson iterations required to reach the solution is computed by dividing the time T1 - T0 required by SIMUL to carry out the simultion by the approximate time required for 1 iteration (ITER computed this way is a pessimistic value so if ITER is less than ITMAX one is sure that the Newton-Raphson iteration has converged). A much better way to do this would of course be to modify SIMUL again so that ITER is an output variable. The values of PW,SA and ITER are printed.

98 Label 108 defines the end of the move to the constraint (if this move is not necessary this label is reached immediately after the test of line 53).

99-103 <u>If possible optimizing conc along the constraint.</u>

If $\frac{\partial P}{\partial conc}$ is more than 0.01, the power is improved by a change of concentration (followed by a return on the constraint if necessary).

104 Incrementing the number of area optimization.

109-125 Computing the sensitivity coefficients of P and Ach with respect to conc, Acl, Axl, Ax2, Acl, Ach (exactly identical to the section between lines 59 and 75).

128-143 <u>Computing the relative gradient, the slope and the maximum value of $\lambda$.</u>

AV is the average defined in Sec. 5.3, DPDL is $\frac{\partial P}{\partial \lambda}$ x 100. ALBD, corresponding to $\lambda$ , is computed by determining first the maximum $\frac{\Delta A}{A}$ to find the area that changes the most. The concentration is held constant. The slope and the relative gradient are printed.

146 ALBD is set such that the most varying area changes of 100 x AINC% of its initial value at each incrementation.

147 Initialization of the number of incrementation of the exhaustive search long the relative gradient.

148-179 <u>Trying successive values of $\lambda$ .</u>

If the maximum number of incrementations is reached the most varying area has changed 70% of its

initial value and the program jumps to label 65 (line 175) pointing the end of the search. The result of the previous incrementation is stored in the array VP in case the new incrementation gives a greater power. After the new areas are computed the values of ITER, λ, PW and SA are computed and printed. If the incrementation gives a better power the program jumps to label 103 (line 168) and proceeds to make another incrementation, if not the parameters and variables return to their former values and the univariant search is over. The global improvement of power during the search, DELP, is computed to decide if another one is justified. The values of the parameters and the variables are printed.

182 If the number of area optimizations is less than NOPT and if the current one has improved the power the program jumps to label 101 (line 49) and after a return on the constraint (and perhaps an optimization of conc) another attempt to improve the distribution of area if made. If not, the optimization is over.

183 If the values of all the sensitivity coefficients at the optimum are wanted put a C at the beginning of the line.

188-204 Computing and printing all sensitivity coefficients at the optimum (exactly identical to lines 59 and 75 and 109 to 125 except that K goes from 1 to 17 and J from 1 to 42).

208-223 Format statements.

# APPENDIX 3

## Sample Optimization

OPTIMIZATION NUMBER 0 (STARTING POINT)

| | | | |
|---|---|---|---|
| DAT( 1) | CONC | .3998 | |
| DAT( 2) | AEL | .3463 | M**2 |
| DAT( 3) | AX1 | .1273 | M**2 |
| DAT( 4) | AX2 | .0779 | M**2 |
| DAT( 5) | ACL | .3818 | M**2 |
| DAT( 6) | ACM | .4321 | M**2 |
| DAT( 7) | WGEL | .0600 | KG/S |
| DAT( 8) | WGEM | .0300 | KG/S |
| DAT( 9) | WCLT | .1000 | KG/S |
| DAT(10) | WCMT | .1000 | KG/S |
| DAT(11) | QELT | 2.0000 | KW |
| DAT(12) | QEMT | 1.0000 | KW |
| DAT(13) | TCLI | 25.0000 | DEG C |
| DAT(14) | TCMI | 25.0000 | DEG C |
| DAT(15) | TELI | -15.0000 | DEG C |
| DAT(16) | TEMI | -10.0000 | DEG C |
| DAT(17) | SPHX | 5.0000 | DEG C |

| | | | |
|---|---|---|---|
| V( 1) | W | .02667 | KG/S |
| V( 2) | PHI | 582.47425 | KPA |
| V( 3) | PLO | 80.10342 | KPA |
| V( 4) | T1 | -13.18361 | DEG C |
| V( 5) | T1P | -18.18361 | DEG C |
| V( 6) | T2 | 60.12924 | DEG C |
| V( 7) | T2P | 37.97536 | DEG C |
| V( 8) | T3 | 32.62068 | DEG C |
| V( 9) | T4 | 29.49873 | DEG C |
| V(10) | T4P | 24.75168 | DEG C |
| V(11) | T5 | -21.17711 | DEG C |
| V(12) | T6 | -24.12498 | DEG C |
| V(13) | T7 | -27.95129 | DEG C |
| V(14) | T8 | -24.19799 | DEG C |
| V(15) | T9 | -24.02422 | DEG C |
| V(16) | T10 | -21.35763 | DEG C |
| V(17) | H1 | 341.04537 | KJ/KG |
| V(18) | H2 | 385.62148 | KJ/KG |
| V(19) | H3 | 288.07214 | KJ/KG |
| V(20) | H4 | 228.56735 | KJ/KG |
| V(21) | H5 | 180.54740 | KJ/KG |
| V(22) | H6 | 177.89400 | KJ/KG |
| V(23) | H7 | 177.89400 | KJ/KG |
| V(24) | H8 | 252.87934 | KJ/KG |
| V(25) | H9 | 255.53275 | KJ/KG |
| V(26) | H10 | 293.02542 | KJ/KG |
| V(27) | FRL7 | .97883 | |
| V(28) | FRL8 | .52706 | |
| V(29) | FRL9 | .51086 | |
| V(30) | FR10 | .27875 | |
| V(31) | FRL3 | .57049 | |
| V(32) | FAC | .59757 | |
| V(33) | FAX | .97248 | |
| V(34) | QCLT | 1.58710 | KW |
| V(35) | QCMT | 2.00182 | KW |
| V(36) | TCHP | 29.65005 | DEG C |
| V(37) | ACH | .13196 | M**2 |
| V(38) | TELO | -25.31585 | DEG C |
| V(39) | TEMO | -20.24241 | DEG C |
| V(40) | TCLO | 28.78784 | DEG C |
| V(41) | TCMO | 31.20960 | DEG C |
| V(42) | P | 1.18893 | KW |

```
DRIVING TO THE CONSTRAINT ( SUM OF AREAS = 1.5 M**2)
****************************************************

          CONC =     .3998
          AEL  =     .3469
          AX1  =     .1278
          AX2  =     .0784
          ACL  =     .3823
          ACH  =     .4326

                          => P =  1.18848 & SA =  1.50000 (ITER =  2 )
                          ********************************************

OPTIMIZING THE CONCENTRATION ALONG THE CONSTRAINT
*************************************************

          CONC =     .4874
          AEL  =     .3434
          AX1  =     .1253
          AX2  =     .0758
          ACL  =     .3797
          ACH  =     .4300

                          => P =  1.17799 & SA =  1.50001 (ITER =  2 )
                          ********************************************

          CONC =     .5500
          AEL  =     .3413
          AX1  =     .1239
          AX2  =     .0744
          ACL  =     .3783
          ACH  =     .4286

                          => P =  1.17269 & SA =  1.50001 (ITER =  2 )
                          ********************************************

          CONC =     .5959
          AEL  =     .3403
          AX1  =     .1232
          AX2  =     .0737
          ACL  =     .3776
          ACH  =     .4279

                          => P =  1.16976 & SA =  1.50001 (ITER =  2 )
                          ********************************************

          CONC =     .6290
          AEL  =     .3400
          AX1  =     .1230
          AX2  =     .0734
          ACL  =     .3773
          ACH  =     .4276

                          => P =  1.16812 & SA =  1.50000 (ITER =  2 )
                          ********************************************

          CONC =     .6979
          AEL  =     .3404
          AX1  =     .1232
          AX2  =     .0737
          ACL  =     .3776
          ACH  =     .4279

                          => P =  1.16623 & SA =  1.50000 (ITER =  2 )
                          ********************************************

THE CONCENTRATION IS OPTIMUM (CRITERION : (D P)/(D CONC) < .01)
```

```
OPTIMIZING THE REPARTION OF AREA AT CONSTANT CONCENTRATION
**********************************************************


VARIATION OF AEM   PER UNIT VARIATION OF
          CONC            -.08070
          AEL              .47993
          AX1             -.02110
          AX2              .00888
          ACL              .00864
          ACH              .00825

VARIATION OF P     PER UNIT VARIATION OF
          CONC             .00800
          AEL             -.43154
          AX1             -.00021
          AX2             -.00799
          ACL             -.22258
          ACH             -.21257


SLOPE ALONG THE RELATIVE GRADIENT =    10.78
RELATIVE GRADIENT :
                    AEL     -.23358
                    AX1      .19775
                    AX2      .15998
                    ACL     -.02462
                    ACH     -.01461
GLOBAL PARALLELISM =  7.


LAMBDA =      .03881          => P =  1.15223 & SA =  1.49998 (ITER =  2 )
                              ---------------------------------------------


LAMBDA =      .07762          => P =  1.15849 & SA =  1.50003 (ITER =  4 )
                              ---------------------------------------------
```

```
LAMBDA =      .11643        => P =  1.15500 & SA =  1.50017 (ITER =  4 )

LAMBDA =      .15525        => P =  1.15181 & SA =  1.50040 (ITER =  4 )

LAMBDA =      .19406        => P =  1.14898 & SA =  1.50067 (ITER =  4 )

LAMBDA =      .23287        => P =  1.14663 & SA =  1.50087 (ITER =  4 )

LAMBDA =      .27168        => P =  1.14502 & SA =  1.50069 (ITER =  4 )
```

```
OPTIMIZATION NUMBER    1
*************************
        DAT( 1) = CONC  =      .6979
        DAT( 2) = AEL   =      .4039    M**2
        DAT( 3) = AX1   =      .0695    M**2
        DAT( 4) = AX2   =      .0221    M**2
        DAT( 5) = ACL   =      .3843    M**2
        DAT( 6) = ACH   =      .4319    M**2
        DAT( 7) = WGEL  =      .0600    KG/S
        DAT( 8) = WGEH  =      .0300    KG/S
        DAT( 9) = WCLT  =      .1000    KG/S
        DAT(10) = WCHT  =      .1000    KG/S
        DAT(11) = QELT  =     2.0000    KW
        DAT(12) = QEHT  =     1.0000    KW
        DAT(13) = TCLI  =    25.0000    DEG C
        DAT(14) = TCHI  =    25.0000    DEG C
        DAT(15) = TELI  =   -15.0000    DEG C
        DAT(16) = TEHI  =   -10.0000    DEG C
        DAT(17) = SPHX  =     5.0000    DEG C

V( 1) = W     =                .02799    KG/S
V( 2) = PHI   =              426.95875    KPA
V( 3) = PLO   =               54.66001    KPA
V( 4) = T1    =              -13.23886    DEG C
V( 5) = T1P   =              -18.23886    DEG C
V( 6) = T2    =               51.40062    DEG C
V( 7) = T2P   =               37.56986    DEG C
V( 8) = T3    =               33.18202    DEG C
V( 9) = T4    =               28.84605    DEG C
V(10) = T4P   =               24.59031    DEG C
V(11) = T5    =              -17.45709    DEG C
V(12) = T6    =              -20.53103    DEG C
V(13) = T7    =              -27.86293    DEG C
V(14) = T8    =              -22.26703    DEG C
V(15) = T9    =              -22.37822    DEG C
V(16) = T10   =              -19.97900    DEG C
V(17) = H1    =              335.42493    KJ/KG
V(18) = H2    =              376.33456    KJ/KG
V(19) = H3    =              284.79428    KJ/KG
V(20) = H4    =              228.23966    KJ/KG
V(21) = H5    =              183.79469    KJ/KG
V(22) = H6    =              180.99922    KJ/KG
V(23) = H7    =              180.99922    KJ/KG
V(24) = H8    =              252.45606    KJ/KG
V(25) = H9    =              255.25153    KJ/KG
V(26) = H10   =              290.97995    KJ/KG
V(27) = FRL7  =                  .95811
V(28) = FRL8  =                  .52035
V(29) = FRL9  =                  .50250
V(30) = FR10  =                  .27007
V(31) = FRL3  =                  .59425
V(32) = FAC   =                  .64695
V(33) = FAX   =                  .95157
V(34) = QCLT  =                 1.58290    KW
V(35) = QCHT  =                 2.56211    KW
V(36) = TCMP  =                30.18564    DEG C
V(37) = AEM   =                  .18900    M**2
V(38) = TELO  =              -25.31585    DEG C
V(39) = TEHO  =              -20.24241    DEG C
V(40) = TCLO  =               28.77781    DEG C
V(41) = TCHO  =               31.11483    DEG C
V(42) = P     =                1.14502    KW
```

```
THE RETURN TO THE CONSTRAINT IS SKIPPED ((SA-1.5)/1.5 <.001)

OPTIMIZING THE REPARTION OF AREA AT CONSTANT CONCENTRATION
**********************************************************

VARIATION OF AEH  PER UNIT VARIATION OF
          CONC          -.13521
          AEL            .51760
          AX1           -.21153
          AX2            .26138
          ACL            .01320
          ACH            .01263

VARIATION OF P    PER UNIT VARIATION OF
          CONC           .01334
          AEL           -.24761
          AX1           -.06442
          AX2           -.15029
          ACL           -.21349
          ACH           -.20428


SLOPE ALONG THE RELATIVE GRADIENT =     1.72
RELATIVE GRADIENT :
                    AEL     -.09823
                    AX1      .13496
                    AX2      .04909
                    ACL     -.01411
                    ACH     -.00490
GLOBAL PARALLELISM = 13.


LAMBDA =      .04506
                                 => P =  1.14459 & SA =  1.50043 (ITER =  4 )
                                 ============================================


LAMBDA =      .09012
                                 => P =  1.14459 & SA =  1.50019 (ITER =  4 )
                                 ============================================


LAMBDA =      .13518
                                 => P =  1.14518 & SA =  1.49988 (ITER =  4 )
                                 ============================================
```

```
OPTIMIZATION NUMBER    2
*********************
     DAT( 1) = CONC =      .6979
     DAT( 2) = AEL  =      .4127    M**2
     DAT( 3) = AX1  =      .0573    M**2
     DAT( 4) = AX2  =      .0177    M**2
     DAT( 5) = ACL  =      .3856    M**2
     DAT( 6) = ACH  =      .4323    M**2
     DAT( 7) = WGEL =      .0600    KG/S
     DAT( 8) = WGEH =      .0390    KG/S
     DAT( 9) = WCLT =      .1000    KG/S
     DAT(10) = WCHT =      .1000    KG/S
     DAT(11) = QELT =     2.0000    KW
     DAT(12) = QEHT =     1.0000    KW
     DAT(13) = TCLI =    25.0000    DEG C
     DAT(14) = TCHI =    25.0000    DEG C
     DAT(15) = TELI = -15.0000      DEG C
     DAT(16) = TEHI = -10.0000      DEG C
     DAT(17) = SPHX =     5.0000    DEG C

V( 1) = W     =              .02799    KG/S
V( 2) = PHI   =           426.79506    KPA
V( 3) = PLO   =            54.66542    KPA
V( 4) = T1    =           -13.23666    DEG C
V( 5) = T1P   =           -18.23666    DEG C
V( 6) = T2    =            51.38744    DEG C
V( 7) = T2P   =            37.55712    DEG C
V( 8) = T3    =            33.17025    DEG C
V( 9) = T4    =            28.83297    DEG C
V(10) = T4P   =            24.58545    DEG C
V(11) = T5    =           -15.63190    DEG C
V(12) = T6    =           -19.28870    DEG C
V(13) = T7    =           -27.77070    DEG C
V(14) = T8    =           -22.18767    DEG C
V(15) = T9    =           -21.96452    DEG C
V(16) = T10   =           -19.89200    DEG C
V(17) = H1    =           335.42626    KJ/KG
V(18) = H2    =           376.32617    KJ/KG
V(19) = H3    =           284.79936    KJ/KG
V(20) = H4    =           228.22638    KJ/KG
V(21) = H5    =           185.46227    KJ/KG
V(22) = H6    =           182.12707    KJ/KG
V(23) = H7    =           182.12707    KJ/KG
V(24) = H8    =           253.59366    KJ/KG
V(25) = H9    =           256.92886    KJ/KG
V(26) = H10   =           292.66216    KJ/KG
V(27) = FRL7  =               .95146
V(28) = FRL8  =               .51310
V(29) = FRL9  =               .49177
V(30) = FR10  =               .25896
V(31) = FRL3  =               .59414
V(32) = FAC   =               .64706
V(33) = FAX   =               .94129
V(34) = QCLT  =              1.58320    KW
V(35) = QCHT  =              2.56139    KW
V(36) = TCHP  =             30.18414    DEG C
V(37) = AEM   =               .19453    M**2
V(38) = TELO  =            -25.31585    DEG C
V(39) = TEHO  =            -20.24241    DEG C
V(40) = TCLO  =             28.77852    DEG C
V(41) = TCHO  =             31.11310    DEG C
V(42) = P     =              1.14459    KW
```

```
DRIVING TO THE CONSTRAINT ( SUM OF AREAS = 1.5 M**2)
****************************************************


          CONC =     .6846
          AEL  =     .4123
          AX1  =     .0572
          AX2  =     .0173
          ACL  =     .3853
          ACM  =     .4321

                                 => P =  1.14492 & SA =  1.49997 (ITER =  2 )
                                 ---------------------------------------------

OPTIMIZING THE REPARTITION OF AREA AT CONSTANT CONCENTRATION
************************************************************


VARIATION OF AEM  PER UNIT VARIATION OF
          CONC          -.11866
          AEL            .53746
          AX1           -.33533
          AX2            .49042
          ACL            .01365
          ACM            .01307

VARIATION OF P    PER UNIT VARIATION OF
          CONC           .00265
          AEL           -.28470
          AX1           -.14015
          AX2           -.25979
          ACL           -.21252
          ACM           -.20350


SLOPE ALONG THE RELATIVE GRADIENT =     -.34
RELATIVE GRADIENT :
                    AEL     -.05001
                    AX1      .39055
                    AX2     -.02509
                    ACL      .02218
                    ACM      .03120

GLOBAL PARALLELISM = 15.
```

```
LAMBDA =     -.06314
                                  => P =  1.14461 & SA =  1.50063 (ITER =  4 )

LAMBDA =     -.12628
                                  => P =  1.14445 & SA =  1.50183 (ITER =  4 )

LAMBDA =     -.18942
                                  => P =  1.14441 & SA =  1.50342 (ITER =  4 )

LAMBDA =     -.25256
                                  => P =  1.14448 & SA =  1.50528 (ITER =  4 )
```

OPTIMIZATION NUMBER 3

| | | | |
|---|---|---|---|
| DAT( 1) | CONC | .6846 | |
| DAT( 2) | AEL | .4028 | M**2 |
| DAT( 3) | AX1 | .0743 | M**2 |
| DAT( 4) | AX2 | .0125 | M**2 |
| DAT( 5) | ACL | .3895 | M**2 |
| DAT( 6) | ACH | .4380 | M**2 |
| DAT( 7) | WGEL | .0600 | KG/S |
| DAT( 8) | WGEH | .0300 | KG/S |
| DAT( 9) | WCLT | .1000 | KG/S |
| DAT(10) | WCHT | .1000 | KG/S |
| DAT(11) | QELT | 2.0000 | KW |
| DAT(12) | QEHT | 1.0000 | KW |
| DAT(13) | TCLI | 25.0000 | DEG C |
| DAT(14) | TCHI | 25.0000 | DEG C |
| DAT(15) | TELI | -15.0000 | DEG C |
| DAT(16) | TEHI | -10.0000 | DEG C |
| DAT(17) | SPHX | 5.0000 | DEG C |

| | | | |
|---|---|---|---|
| V( 1) | W | .02788 | KG/S |
| V( 2) | PHI | 432.74141 | KPA |
| V( 3) | PLO | 55.74015 | KPA |
| V( 4) | T1 | -13.15374 | DEG C |
| V( 5) | T1P | -18.15374 | DEG C |
| V( 6) | T2 | 51.76780 | DEG C |
| V( 7) | T2P | 37.58989 | DEG C |
| V( 8) | T3 | 33.03376 | DEG C |
| V( 9) | T4 | 28.73719 | DEG C |
| V(10) | T4P | 24.44263 | DEG C |
| V(11) | T5 | -17.95679 | DEG C |
| V(12) | T6 | -19.86770 | DEG C |
| V(13) | T7 | -27.87547 | DEG C |
| V(14) | T8 | -22.27346 | DEG C |
| V(15) | T9 | -22.15371 | DEG C |
| V(16) | T10 | -19.97907 | DEG C |
| V(17) | H1 | 335.73732 | KJ/KG |
| V(18) | H2 | 376.79214 | KJ/KG |
| V(19) | H3 | 284.19522 | KJ/KG |
| V(20) | H4 | 228.11459 | KJ/KG |
| V(21) | H5 | 183.34455 | KJ/KG |
| V(22) | H6 | 181.60686 | KJ/KG |
| V(23) | H7 | 181.60686 | KJ/KG |
| V(24) | H8 | 253.35534 | KJ/KG |
| V(25) | H9 | 255.29304 | KJ/KG |
| V(26) | H10 | 290.96728 | KJ/KG |
| V(27) | FHL7 | .95430 | |
| V(28) | FHL8 | .51531 | |
| V(29) | FHL9 | .50424 | |
| V(30) | FH10 | .27153 | |
| V(31) | FHL3 | .59828 | |
| V(32) | FAC | .64714 | |
| V(33) | FAX | .95430 | |
| V(34) | QCLT | 1.56326 | KW |
| V(35) | QCHT | 2.58115 | KW |
| V(36) | TCHP | 30.21035 | DEG C |
| V(37) | AEH | .18623 | M**2 |
| V(38) | TELO | -25.31585 | DEG C |
| V(39) | TEHO | -20.24241 | DEG C |
| V(40) | TCLO | 28.73092 | DEG C |
| V(41) | TCHO | 31.16027 | DEG C |
| V(42) | P | 1.14441 | KW |

## INTERNAL DISTRIBUTION

1. T. D. Anderson
2. R. S. Carlsmith
3. L. M. Cochran
4. F. A. Creswick
5. R. C. DeVault
6. J. E. Dobson
7. R. D. Ellison
8. P. D. Fairchild
9. S. K. Fischer
10. W. Fulkerson
11. G. Grossman
12. G. R. Hadder
13. V. O. Haynes
14. K. E. Heidenreich
15. D. W. Jared
16. M. A. Karnitz
17. C. G. Lawson
18. W. P. Levins
19-23. P. M. Love
24. L. N. McCold
25. V. C. Mei
26. J. W. Michel
27. W. R. Mixon
28. H. Perez-Blanco
29. G. T. Privon
30. C. K. Rice
31. R. C. Robertson
32. M. W. Rosenthal
33. A. D. Shepherd
34. K. N. Spurgeon
35. D. B. Trauger
36. T. A. Vineyard
37. T. J. Wilbanks
38. A. Zucker
39-40. Central Research Library
41. Document Reference Section
42-43. Emergency Technology Library
44. Laboratory Records - RC
45-47. Laboratory Records Department
48. ORNL Patent Section
49-99. Efficiency and Renewables Research Section, 9102-2, Rm 218

## EXTERNAL DISTRIBUTION

100. C. A. Allen, Energy Information Administrations, EI60, Federal Building, 1200 Pennsylvania Ave., NW, Washington, DC 20461
101. E. K. Bastress, Energy Conversion and Utilization Technology Division, CE 143, Department of Energy, 1000 Independence Ave., SW, Washington, DC 20585
102. Congressional Information Service, Research Building 83, Kodak Park, Rochester, NY 14650
103. J. J. Cuttica, Energy Conversion Equipment Branch, CE 113.2, Department of Energy, 1000 Independence Ave., SW, Washington, DC 20585
104. G. D. Duffy, Air Conditioning News, 700 East Maple, Birmingham, AL 48011
105. Edison Electric Institute, Library - 8th Floor, 1111 19th St., NW, Washington, DC 20036
106. R. Fiskum, Energy Conversion Equipment Branch, CE 113.2, Department of Energy, 1000 Independence Ave., SW, Washington, DC 20585
107. J. H. Gibbons, Office of Technology Assessment, U. S. Congress, 600 Pennsylvania Ave., SE, Washington, DC 20510
108. R. E. Goodson, Institute for Interdisciplinary Engineering Studies, Potter Engineering Center, Purdue University, West Lafayette, IN 47974

109. D. Grether, Freidrich Air Conditioning and Refrigeration, P. O. Box 1540, San Antonio, TX 78295
110. G. C. Groff, Research Division, Carrier Corporation, Syracuse, NY 13201
111. R. J. Hamphill, Gas Research Institute, 8600 West Bryn Maur Ave., Chicago, IL 60631
112. L. Hobart, American Public Power Association, 2600 Virginia Ave., NW, Washington, DC 20037
113. T. Hobson, Building Equipment Division, CE 113.2, Department of Energy, 1000 Independence Ave., SW, Washington, DC 20585
114. H. Jaster, General Electric Corporate Research and Development, General Electric Company, Schenectady, NY 13201
115. L. Johnson, Oak Ridge Associated Universities, Executive Office, Administration Building, Oak Ridge, TN 37830
116. F. R. Kalhammer, Energy Management and Utilization Division, Electric Power Research Institute, 3412 Hillview Ave., P. O. Box 10412, Palo Alto, CA 94303
117. T. Kapus, Office of Buildings Energy Research and Development, CE 11, Department of Energy, 1000 Independence Ave., SW, Washington, DC 20585
118. R. W. King, Manager, Advanced Engineering, Copeland Corporation, Sydney, OH 45365
119. A. Lannus, Residential and Commercial Applications, Electric Power Research Institute, 3412 Hillview Ave., P.O. Box 10412, Palo Alto, CA 94303
120. T. R. LaPorte, Political Science Institute of Government Studies, University of California, Berkeley, Berkeley, CA 94720
121. D. C. Lim, Energy Conversion Equipment Branch, Department of Energy, CE 113.2, 1000 Independence Ave., SW, Washington, DC 20585
122. H. P. Luckett, Editor in Chief, Popular Science, 380 Madison Ave., New York, NY 10017
123. J. McCallum, Executive Editor, Air Conditioning and Refrigeration Business, 614 Superior Avenue West, Cleveland, OH 44113
124. J. P. Millhone, Office of Buildings Energy Research and Development, CE 11, Department of Energy, 1000 Independence Ave., SW, Washington, DC 20585
125. F. H. Morse, Office of Solar Heat Technologies, CE 31, Department of Energy, 1000 Independence Ave., SW, Washington, DC 20585
126. L. I. Moss, P. O. Box 1496, Estes Park, CO 80517
127. National Energy Information Center, Library, Room 1404, 12th and Pennsylvania Ave., NW, Washington, DC 20461
128. T. Ratchford, Committee on Science and Technology, Subcommittee on Energy Research and Development, House of Representatives, Washington, DC 20515
129. B. Riley, Advance Development, HeilQuaker Corporation, 647 Thompson Lane, Post Office Box 40566, Nashville, TN 37204
130. J. Rizzuto, New York State Energy Research and Development Authority, Agency Building No. 2, Empire State Plaza, Albany, NY 12223
131. J. H. Rothenburg, Utilities Systems, Department of Housing and Urban Development, 451 7th St., SW, Washington, DC 20410

132. J. D. Ryan, Energy Conversion Equipment Branch, CE 113.2, Department of Energy, 1000 Independence Ave., SW, Washington, DC 20585
133. L. A. Sarkes, American Gas Association, 1515 Wilson Blvd., Arlington, VA 22209
134. M. Savitz, Deputy Assistant Secretary for Conservation, CE 10, Department of Energy, 1000 Independence Ave., SW, Washington, DC 20585
135. J. L. Schulze, General Electric Company, Appliance Park, Louisville, KY 40225
136. D. E. Sherpereel, Research and Engineering Center, Whirlpool Corporation, Benton Harbor, MI 49022
137. J. A. Smith, Test and Evaluation Branch, CE 113.2, Department of Energy, 1000 Independence Ave., SW, Washington, DC 20585
138. E. W. Spannhoke, White Consolidated Industries, Inc., 11770 Benea Road, Cleveland, OH 44111
139. W. D. Syniuta, Advanced Mechanical Technology, Inc., 141 California Street, Newton, MA 02158
140. C. C. Thiel, Jr., Division of Advanced Technology Applications, National Science Foundation, 1800 G. Street, NW, Washington, DC 20550
141. Institute of Energy Analysis, ORAU-Library
142. Office of Assistant Manager for Energy Research and Development, U.S. Department of Energy, Oak Ridge Operations Office

143-169. Technical Information Center, Department of Energy, P. O. Box 62, Oak Ridge, TN 37830

☆U.S. GOVERNMENT PRINTING OFFICE: 1981-740-062/251