ENERGY CONSERVATION

ORNL/Sub/81-7762/2&01

ENERGY CHARACTERISTICS OF A TWO-EVAPORATOR REFRIGERATOR USING A REFRIGERANT MIXTURE

W. F. Stoecker

Report Prepared by
UNIVERSITY OF ILLINOIS AT URBANA-CHAMPAIGN
URBANA, ILLINOIS 61801
under
Subcontract 7762-X01
for
OAK RIDGE NATIONAL LABORATORY
OAK RIDGE, TENNESSEE 37830
operated by
UNION CARBIDE CORPORATION
for the

U. S. DEPARTMENT OF ENERGY

Office of Buildings and Community Systems

Under Contract No. W-7405-eng-26

Printed in the United States of America. Available from
National Technical Information Service
U.S. Department of Commerce
5285 Port Royal Road, Springfield, Virginia 22161
NTIS price codes—Printed Copy: A05 Microfiche A01

This report was prepared as an account of work sponsored by an agency of the United States Government. Neither the United States Government nor any agency thereof, nor any of their employees, makes any warranty, express or implied, or assumes any legal liability or responsibility for the accuracy, completeness, or usefulness of any information, apparatus, product, or process disclosed, or represents that its use would not infringe privately owned rights. Reference herein to any specific commercial product, process, or service by trade name, trademark, manufacturer, or otherwise, does not necessarily constitute or imply its endorsement, recommendation, or favoring by the United States Government or any agency thereof. The views and opinions of authors expressed herein do not necessarily state or reflect those of the United States Government or any agency thereof.

ORNL/Sub-81-7762/2&01
Dist. Category UC-95d

Final Report

ENERGY CHARACTERISTICS OF A TWO-EVAPORATOR REFRIGERATOR USING A REFRIGERANT MIXTURE

Phase II - Project X01 7762

Sponsored by

Oak Ridge National Laboratory
Operated by Union Carbide Corporation
P. O. Box Y
Oak Ridge, TN 37830
Contract No. W-7405-eng-26

Prepared by

Professor W. F. Stoecker, Principal Investigator
Department of Mechanical and Industrial Engineering
1206 West Green Street
University of Illinois at Urbana-Champaign
Urbana, IL 61801

March, 1982

SCOPE

The tasks to be accomplished in this Phase II of the refrigerant mixture research sponsored by Oak Ridge National Laboratory at the University of Illinois at Urbana-Champaign were listed in the proposal dated June 15, 1979:

1. Review the refrigerant-mixture literature that has appeared since Phase I in 1978 and keep up to date on the new literature. This review is presented in Chapter 1.
2. Update the Phase I simulation model to include the simulation of two condensers in series. This task was completed and reported in the master of science thesis of Philippe Launay which was submitted to ORNL in January 1981 and summarized in Chapter 2 of this report.
3. Construct a test facility, run shakedown tests, and perform error analysis. Chapter 3 reports the details of this task.
4. Perform tests and draw conclusions from two major series of tests with different pairs of refrigerant mixtures varying in composition from 0 to 60 percent by mass. The results and analyses of tests of one refrigerant combination (R12 and R114) from 0 to 61.5 percent are reported in Chapter 4.
5. Refine the simulation model. Chapter 5 lists the changes to be made on the simulation model to bring the model into better conformity with experimental results.

The final chapter of the report attempts to put the work into perspective and suggests the most fruitful future directions for further exploration.

SUMMARY

Thermodynamic analysis has shown that energy can be conserved in a two-evaporator refrigerator by applying a non-azeotropic mixture of refrigerants in place of a single refrigerant. The two major efforts reflected in this report are (1) optimization of the distribution of heat-transfer area and of the mixture concentration, and (2) an experimental study to validate the analytical models. The mixture chosen was R12/R114.

The optimization showed two local minima of energy consumption, one at 30 percent R114 and the other at 70 percent R114 by mass. While the 70 percent R114 mixture indicated power requirements about 1.4 percent less than the 30 percent R114 mixture, the vapor of the 30 percent R114 mixture is the denser of the two and requires lower compressor displacement. With respect to the distribution of heat-transfer area, the optimization indicated that the area of the low-temperature heat exchanger could be used better in the other heat exchangers. This finding would be viewed favorably from a manufacturing standpoint.

The experimental studies consisted of a series of tests of various R12/R114 concentrations and confirmed the progressive change in temperatures of the boiling and condensing refrigerant. The tests were inconclusive in validating the energy conservation possibilities, but uncovered important practical considerations such as the influence of pressure drop in the heat exchangers and the performance of the compressor with the low vapor density that occurs at high R114 concentrations.

TABLE OF CONTENTS

Page

Abstract.....i

Summary.....ii

1. Review of Literature since 1978.....1

2. Updated Simulation Model, Including Optimization.....9

3. Test Facilities and Test Procedure.....21

4. Refrigerant Mixture Tests--Results and Analysis.....31

5. Redefinition of the Simulation Model.....51

6. Future Directions.....55

Appendix A.1 Personnel.....59

Appendix A.2 Property Equations.....60

Appendix A.3 Raw Data.....61

1. REVIEW OF LITERATURE SINCE 1978

1-1. The 1978 survey. One of the purposes of the initial Oak Ridge National Laboratory-University of Illinois at Urbana-Champaign work was to conduct a review of the literature pertaining to refrigerant mixtures. The 49 references reviewed constituted the most complete listing of refrigerant mixture papers that had been published to that time. One of the tasks of the work reported here was to update that list and to assess the implications of work reported in those papers. Our continuous search has located 30 new publications appearing since the 1978 survey, and these are listed at the end of the chapter. The review of these papers in the next several sections lists the major collections of refrigerant mixture work, the subject categories into which most of the papers fall, locations of active work, and an evaluation of the directions that are indicated by the literature.

1-2. Major sources of papers. The meetings of the International Institute of Refrigeration (IIR) have been the richest sources of papers, and the major meetings of IIR were: (1) meeting of Commission B2 (refrigeration machinery) which took place in Delft, Netherlands, in September 1978, (2) the XV International Congress of Refrigeration in Venice, 1979, and (3) meeting of Commissions B1 (heat transfer and thermodynamic properties), B2, and E2 (heat pumps) in Mons, Belgium, 1980. The IIR was an important stimulus for many years, dating back to papers by Tschaikovsky in the 1963 international congress and Lorenz and Meutzner in the 1975 congress. In the Delft commission meeting, papers 10 and 22 from the list originated in West Germany. The 1979 International Congress in Venice produced 9 papers (4,5,6,8,12,15,18,28, and 29). Sensing a growing interest in the subject, the leaders of IIR scheduled a commission meeting in Mons, Belgium in September 1980 titled, "Mixtures of Refrigerant Fluids: Properties and Applications."

The scope of the title inherently included absorption refrigeration which was the subject of a number of the papers, but nine papers on refrigerant mixtures used in vapor compression systems were also presented (2,3,7,9,13,16,17,20, and 25).

The other papers listed in this chapter appeared in a variety of technical journals throughout Europe and the United States.

1-3. Major subject headings. The main categories into which almost all of the papers fall are (1) review papers, (2) energy conservation, (3) capacity control, especially for heat pumps, (4) properties of refrigerant mixtures, and (5) the two-branch system. As expected, some papers cover several topics, especially the review papers that also treat energy conservation and capacity modulation.

Papers primarily falling into the review category are 1, 13, 14, 22, and 26 whose major purpose is to introduce the topic to the reader and often to present an evaluation of the potential for application to refrigerant mixtures.

The energy conservation catergory (2,10-12,21,24,29,30) also include several papers concentrating on heat transfer coefficients (2,12,29,30). Experimental work is now appearing in these papers, but results must be scrutinized to be sure that a fair basis of comparison prevails as the refrigerant in the system is changed, especially with respect to temperature levels and rates of heat transfer.

Capacity modulation, where the concentration of the operating refrigerant can be changed by extracting or adding a mixture richer in one component, is one of the two main reasons for interest in refrigerant mixtures. This subject is addressed in papers 5, 20, and 25.

Probably more papers are devoted to thermodynamic properties than any other subject, namely Refs. 3, 4, 6-9, 16, 18, 19, 23, 27, and 28. The high level of activity in this important subject is reassuring to those researchers concentrating on other facets of refrigerant mixtures.

Kazachki (15 and 17) has been the only researcher reporting on the two-branch system. The preliminary work in the ORNL-UI study did not show favorable results for this concept, but it would be advisable to verify or disprove that pessimistic evaluation.

1-4. Sites of active work. Some of the pioneering efforts in refrigerant mixtures have been motivated by applications in the chemical and process industries, especially in England (Haselden) and in the United States. The impetus for applications in commercial refrigeration and air conditioning probably started in the Soviet Union (Tschaikovsky in 1963) and in East Germany (Lorenz and Meutzner in 1975). The nations in which refrigerant mixture work seems most active are the Soviet Union, East Germany, West Germany, France, India, and the United States. Some work is apparently going on in other countries, but little has been published so far.

In the Soviet Union, the research center in Odessa was the original site of refrigerant mixture work, but now workers in other locations, including the All-Union Scientific Refrigeration Institute in Moscow, are active. In East Germany, the Institute of Refrigeration and Air Conditioning in Dresden is the center of effort. Professor Kruse in Hannover, West Germany, conducts an active program with the potential application to heat pumps being the major focus. The Technical University of Hannover and the firm of Bosch-Siemens maintain close communication on the potential of refrigerant mixtures. India has been the site of experimental as well as analytical studies in both energy and properties. In the United States, besides the ORNL-UI project, the

Du Pont Company has reported work on a capacity control using mixtures, and patent summaries indicate that several manufacturers of refrigeration equipment are working on mixtures.

1-5. Evaluation of literature and progress in mixture applications. The level of research activity on refrigerant mixtures has increased dramatically in the past half-dozen years. Prudent planning requires that a continual assessment be made of the subject to be sure that this high level of activity is not due solely to the attraction of interesting technical problems or even that the subject is only a fad. Solid opportunities for energy conservation must justify the continuation of this work. Evaluations are needed, especially because of the fact that except for a few cases there are no current industrial or commerical applications of refrigerant mixtures.

One element that supports continued interest in the subject is the potential, at least on paper, of improvement in energy conservation and capactiy modulation. To achieve either of these potential benefits, some practical problems must be surmounted, not the least of which is a complete redesign of an existing product or system. The history of other new developments shows that the actual gain is always less than theoretical, and this degradation would also be expected with refrigerant mixtures. It is fortunate that a number of establishments are working on the topic and that findings are being shared.

One of the early policy decisions in the ORNL-UI project was that we would not move into property studies of refrigerant mixtures, even though acurate property equations are crucial. The number of papers that have already appeared on the thermodynamic and physical properties of mixtures and the prospect of continued research by those laboratories suggests that the source of property data will be adequate.

REFERENCES

1. G. Ahnefield, "A Report on the Introduction of Non-Azeotropic Binary Refrigerants in Compression Heat Pumps and Cooling Systems," Luft und Kaeltetechnik, Vol. 16, No. 1, pp. 19-24, 1980.

2. A. Aittomaki, "Use of Refrigerant Mixtures in Exhaust-Air Heat Pump," Proc. of Meeting of Commissions B1, B2, and E2, Int. Inst. of Refrigeration, Mons, Belgium, September, 1980.

3. E. Bender and H. Herrmann, "Calculations of Critical Points and Vapor-Liquid Equilibria in the Critical Region of Mixtures by Means of the BWR-Starling Equation of State," Proc. of Meeting of Commissions B1, B2, and E2, Int. Inst. of Refrigeration, Mons, Belgium, September, 1980.

4. J. D. F. Bougard and R. H. E. Jadot, "Calculating the State Variables of Halogenated Hydrocarbons and Halogenated Hydrocarbon Mixtures Using the Virial Equation of State and the Kihara Interaction Potential," Paper B1-62, XV Int. Congress of Refrigeration, Venice, 1979.

5. W. D. Cooper and H. J. Borchardt, "The Use of Refrigerant Mixtures in Air-to-Air Heat Pumps," Paper E1-60, XV Int. Congress of Refrigeration, Venice, September, 1979.

6. R. Doering and H. Knapp, "Thermodynamic Properties of Mixtures of Fluorinated Hydrocarbons," Paper B1-76, XV Int. Congress of Refrigeration, Venice, September, 1979.

7. R. Doering and H. Knapp, "Calculation of Thermodynamic Properties with Generalized Equations of State for Mixed Refrigerant Cycles," Proc. of Meeting of Commissions B1, B2, and E2, Int. Inst. of Refrigeration, Mons, Belgium, September, 1980.

8. T. Do Vuong and J. Straub, "An Experimental Investigation of the Surface Tension and Refractive Index of Binary Mixtures," Paper B1-9, XV Int. Congress of Refrigeration, Venice, September, 1979.

9. R. Jadot, "Comparative Study of Several Equations of State of Thermodynamic Properties of Freons and Freon Mixtures," Proc. of Meeting of Commissions B1, B2, and E2, Int. Inst. of Refrigeration, Mons, Belgium, September, 1980.

10. R. Jakobs and H. Kruse, "The Use of Non-Azeotropic Refrigerant Mixtures in Heat Pumps for Energy Saving," Proc. of Meeting of Commission B2, Int. Inst. of Refrigeration, Delft, September, 1978.

11. R. Jakobs, "Report on the Application of Non-Azeotropic Binary Refrigerants in Heat Pumps," Doctoral Dissertation, Mechanical Engineering, University of Hannover, 1980.

12. H. Jungnickel, P. Wassilew, and W. E. Kraus, "Investigation into Heat Transfer in Boiling Binary Refrigerant Mixtures," Paper No. B1-47, XV Int. Congress of Refrigeration, Venice, September, 1979.

13. E. Jottrand, "Refrigeration Machine Using a R12-R13 Non-Azeotropic Mixture and an Intermediate Heat Exchanger," Proc. of Meeting of Commissions B1, B2, and E2, Int. Inst. of Refrigeration, Mons, Belgium, September, 1980.

14. V. Kaiser, O. Salhi, and C. Pocini, "Analysis of Mixed Refrigerant Cycles," Hydrocarbon Processing, Vol. 57, No. 7, pp. 163-167, July 1978.

15. G. Kazachki, "Two Aspects of the Practical Applications of Non-Azeotropic Refrigerants," Paper B1-89, XV Int. Congress of Refrigeration, Venice, September, 1979.

16. G. Kazachki, "Critical Pressures and Temperatures of Some Non-Azeotropic Mixtures," Proc. of Meeting of Commissions B1, B2, and E2, Int. Inst. of Refrigeration, Mons, Belgium, September, 1980.

17. G. Kazachki, "Calculation of Two-Branch Cycles with a Non-Azeotropic Refrigerant," Proc. of Meeting of Commissions B1, B2, and E2, Int. Inst. of Refrigeration, Mons, Belgium, September, 1980.

18. W. E. Kraus, and D. Vollmer, "Thermodynamic Diagrams for Non-Azeotropic Refrigerant Mixtures," Paper B1-48, XV Int. Congress of Refrigeration, Venice, September, 1979.

19. W. E. Kraus and D. Vollmer, "Application of the Redlich-Kwong Equation of State to Halogenated Refrigerants and Their Mixtures," Wissensch. Zietschrift of the Technical University of Dresden, Vol. 27, No. 4, pp. 999-1006, 1978.

20. H. Kruse, "The Advantages of Non-Azeotropic Refrigerant Mixtures for Heat Pump Application," Proc. of Meeting of Commissions B1, B2, and E2, Int. Inst. of Refrigeration, Mons, Belgium, September, 1980.

21. A. I. Labochnik and E. I. Schwartzman, "Boiling of R11 and R142 and their Binary Mixtures in Large Chambers," Cholog. Tech., Vol. 55, No. 12, pp. 20-22, December, 1978.

22. H. Lotz, "Heat Pumps, Energy Saving by Use of Refrigerant Mixture Compressor System," Proc. of Meeting of Commission B2, Int. Inst. of Refrigeration, Delft, September, 1978.

23. V. N. Makarov, "Thermodynamic Properties of Mixtures of Freons 12 and 13 at High Pressures and Temperatures," Cholod. Tech., Vol. 53, No. 7, pp. 29-32, July, 1977.

24. A. A. Mucayev, "Experimental Investigations of a Low-Temperature, Single-Stage Refrigeration System Operating on a Mixture of Refrigerants," Cholod. Tech., Vol. 55, No. 12, pp. 10-14, December, 1978.

25. A. Rojey, "Heat Pump Operating with a Fluid Mixture," Proc. of Meeting of Commissions B1, B2, and E2, Int. Inst. of Refrigeration, Mons, Belgium, September, 1980.

26. S. N. Saluja, R. W. James, and A. Cryne, "Problems in the Use of Mixed Refrigerants in Vapor Compression Machines," Ref. and Air Cond., Vol. 81, No. 961, pp. 105-108, April, 1978.

27. L. C. Singal, C. P. Sharma, and H. Varma, "Thermodynamic Property Charts anc Cycle Analysis for Binary Refrigerant Mixtures," ASHRAE Trans., Vol. 87, Part 1, Paper No. 2615, 1981.

28. Y. Takaishi, M. Uematsu, and K. Watanabe, "Measurements of the PVTx Properties of Binary Refrigerants," Paper B1-36, XV International Congress of Refrigeration, Venice, September, 1979.

29. H. K. Varma and C. P. Sharma, "Heat Transfer Coefficients During Forced Convection Evaporation of R-12 and R-22 Mixtures in Annular Flow Regime," Paper B1-46, XV International Congress of Refrigeration, Venice, September, 1979.

30. P. Wassilev, "The Evaporation of Binary Refrigerant Mixtures," Proc. of the 13th Conf. on Refrigeration, Inst. of Air Conditioning and Refrigeration, Dresden, 1979.

2. UPDATED SIMULATION MODEL, INCLUDING OPTIMIZATION.

2-1. Simulation model since the 1978 report. Steady-state system simulation is the process of predicting the performance of a complete system when the performance characteristics of the components of the system and the external conditions and flow rates to the system are known. The refrigerant mixture system simulation predicts the operating variables (pressure, temperatures, flow rates of energy and refrigerant) when the areas and heat transfer coefficients of all heat exchangers, the performance characteristics of the compressor, the refrigerant properties and flow rates and temperatures of entering fluids are known. This simulation program is mutually supportive of the experimental program since experimental data on actual performance of the components continually refine the simulation program. The accuracy of the simulation program is no better than the fidelity of the performance characteristics of the components. In the other direction, simulations from a reasonably accurate program indicate the modifications that can be made on the experimental facility in order to improve performance, such as how the heat exchange area should be subdivided to achieve the desired rates of evaporator heat transfer at specified temperature levels, but with minimum compressor power.

To our knowledge the ORNL-UI project is the only refrigerant mixture study utilizing a system simulation program. An asset of the simulation program is the ability to make a reasonably fair evaluation of the substitution of refrigerant mixtures for a single refrigerant. Some researchers analyze systems where the heat transfer area is increased when mixtures are used in order to compensate for the progressive rise of refrigerant temperature. A simulation program can maintain constant heat transfer rates and levels of temperature of fluid being cooled.

The revisions to the 1978 simulation program felt to be most important were: to segment the condenser into two separate condensers, to incorporate a desuperheating section into the condenser, to allow for the possibility of superheating in the high temperature heat exchanger, and to refine the computation of the work of compression. These tasks were accomplished and reported in the Master of Science Thesis of Philippe Launay*. In addition to those prescribed tasks, the system simulation capability enabled a next step which was one of optimization of the distribution of heat-exchange areas and the selection of the optimum mixture concentration. The technique of the simulation is described in Launay's report and a summary of the study is presented in Sections 2-5 and 2-6.

2-2. Segmented condenser. The initial motivation for ORNL-UI work was to explore the application of mixtures of a two-evaporator domestic refrigerator. As the project progressed, the possible application of a refrigerant mixture to a heat pump gained in interest. In a heat pump, the heat rejected from the first condenser in the sequence--the high-temperature condenser--would be used for purposes such as water heating. The heat rejected from the second condenser could be used for space heating or rejected to the atmosphere. As a part of the refinement of treating the condenser, the heat-transfer in the desuperheating portion of the high-temperature condenser was calculated separately, as shown in Fig. 2-1. The refrigerant from the compressor passes in turn through the high-temperature and then the low-temperature condenser leaving as a saturated liquid. The amount of superheat entering the high temperature condenser varies as the composition of the mixture changes, so one of the tasks of the simulation program is to determine

*P. F. Launay, "Improving the Efficiency of Refrigerators and Heat Pumps by Using a Non Azeotropic Mixture of Refrigerants," ORNL Sub-81/7762/1, prepared for ORNL by the University of Illinois at Urbana-Champaign, October, 1981.

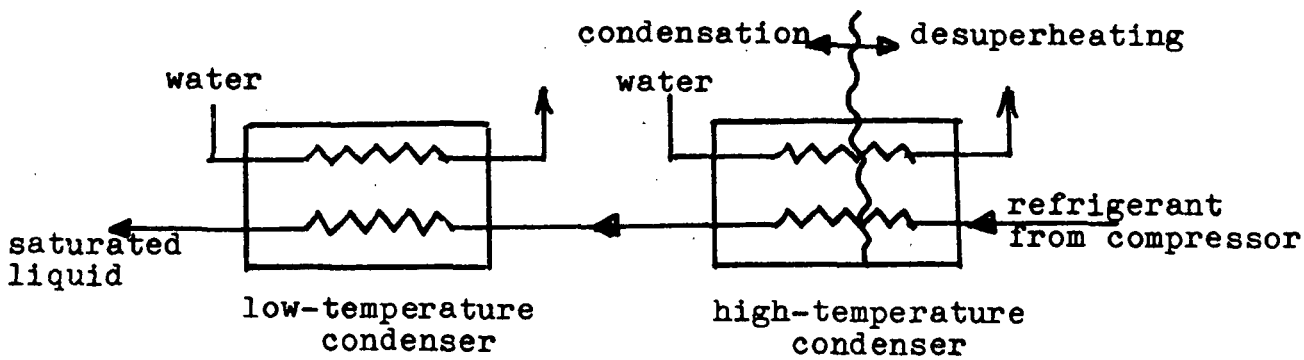

Fig. 2-1. Desuperheating and condensation in segmented condensers.

how the high-temperature condenser proportions its area into the desuperheating section and the condensing section. In all cases during the simulation saturated liquid was specified as the condition of refrigerant leaving the low-temperature condenser.

With 100 percent R12 as the refrigerant, the temperature during condensation remains constant, but with a mixture the temperature of the condensing refrigerant progressively drops. Properties of superheated vapor were not used in the 1978 simulation, so with the refinement during this work it was necessary to develop equations that expressed the enthalpy of superheated vapor as a function of its pressure and temperature. These equations are presented on page 32 of Launay's report.

2-3. Superheat in the high-temperature heat exchanger, HTHX. A troublesome question haunting both the simulation and the plans for conducting the experimental tests was how to compare the performance of the single refrigerant with the mixture on a fair basis. The decision was made early to maintain identical rates of heat transfer in the low-temperature evaporator for all tests, identical rates in the high-temperature evaporator, and also maintain the same levels of temperature of fluid being chilled for all refrigerant compositions. An inconsistency arises, however, because the evaporating refrigerant temperature will progressively rise when a mixture is used which reduces the heat transfer rate in the high-temperature evaporator. In the 1978 simulations saturated vapor was specified leaving the high-temperature heat exchanger and entering the compressor. We later recognized that this specification was inconsistent with the need of fixing the average temperature levels of refrigerant in the two evaporators.

In the refined simulation we allowed for the possibility of superheating to occur in the HTHX, as illustrated in Fig. 2-2. In the experimental studies

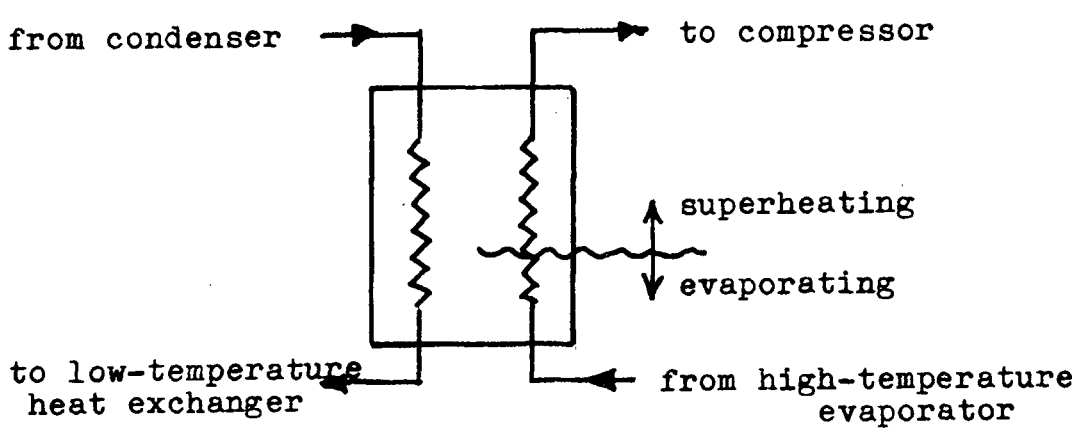

Fig. 2-2. Superheating in the high-temperature heat exchanger.

reported in Chapter 4 it was found necessary to operate with the point at which superheating began even further back in the system, namely in the high-temperature evaporator.

2-4. Isentropic work of compression. The 1978 simulation computed the work of compression by a single approximate equation which no doubt gave consistent relative results. That equation was a composite of the equation for the two refrigerants and expressed the magnitude as a function of the total pressure before and after compression.

A new more accurate equation results if the compression of the mixture is expressed as the combined work of compressing each component from its partial pressure at the suction conditions to the partial pressure at the discharge. The new equation expresses the work of compression of each component for an isentropic process as a function of the initial temperature and the initial and final partial pressures. For an ideal mixture, such as R114 and R12, the total work of compression is the sum of that of the two components.

2-5. Optimization. While the optimization of the system was not listed as one of the tasks, the simulation efforts provided the tools to move into an optimization study. Even though the simulation model is acknowledged to be preliminary, the results of the optimization alert us to characteristics of the system which should be observed carefully as the study continues.

The word "optimization" is used and misused in the literature so an early statement should be made on what constitutes the optimization. The optimum system is here defined as the one requiring minimum compressor power subject to the constraints of a constant total area of heat-exchange surface, fixed heat transfer rates at the two evaporators, and fixed flow rates and temperatures of fluids being cooled as well as of the condenser cooling water.

The optimization effort offered the opportunity of testing a method developed at the University of Illinois at Urbana-Champaign which is a natural companion of the Newton-Raphson method of simulation. A step in the Newton-Raphson method determines the partial derivatives of all the equations that describe the system with respect to all of the variables. By appropriate use of cofactors of the matrix of partial derivaties it is possible to find the partial derivative of one variable with respect to another, for example, the partial derivative of the compressor power with respect to refrigerant concentration with all other variables remaining constant. It is possible to rerun the simulation program with a slight change in concentration and compute the quotient of the change in power to the change in concentration. In a multivariable problem such as the two-evaporator system, however, reruns would have to be made for each of the independent variables. In the new technique, on the other hand, all the information can be extracted from the matrix of the partial derivatives that results from the final Newton-Raphson iteration.

The optimization calculations were made with the following constraints applicable:

rate of heat transferred in the low-temperature evaporator, 2,000 W;

rate of heat transferred in the high-temperature evaporator, 1,000 W;

temperature of glycol entering high-temperature evaporator, -10°C;

temperature of glycol entering low-temperature evaporator, -15°C;

temperature of cooling water entering both condensers, 25°C;

total heat exchange area in the two evaporators, two condensers and two heat exchangers, 1.5 m^2;

overall heat-transfer coefficients of various heat exchangers (based on the refrigerant-side area):

evaporation: 1.1 $kW/(m^2 \cdot K)$ or 193.7 $Btu/(hr \cdot ft^2 \cdot °F)$

condensation: 1.0 $kW/(m^2 \cdot K)$ or 176.1 $Btu/(hr \cdot ft^2 \cdot {}^0F)$

desuperheating: 0.2 $kW(m^2 \cdot K)$ or 35.2 $Btu/(hr \cdot ft^2 \cdot {}^0F)$

convection without phase change in heat exchanger:

1.2 $kW/(m^2 \cdot K)$ or 211.3 $Btu/(hr \cdot ft^2 \cdot {}^0F)$

superheating: 0.8 $kW/(m^2 \cdot K)$ or 140.9 $Btu/(hr \cdot ft^3 \cdot {}^0F)$

These heat-transfer coefficients will be adjusted later to conform to experimental results.

fluid flow rates:

glycol in low-temperature evaporator: 0.06 kg/s

glycol in high-temperature evaporator: 0.03 kg/s

water in high-temperature condenser: 0.1 kg/s

water in low-temperature condenser: 0.1 kg/s

The calculation routine using the above parameters showed the optimum concentration and distribution of heat-exchanger area to be:

concentration of R114, 68 percent:

Areas: low-temperature evaporator, 0.40 m^2

high-temperature evaporator, 0.20 m^2

high-temperature heat exchanger, 0.06 m^2

low-temperature heat exchanger, 0.02 m^2

low-temperature condenser, 0.40 m^2

high-temperature condenser, 0.42 m^2

At the above refrigerant concentration and distribution of areas, the power requirements would be 1.145 kW. This power requirement could be compared with that required for pure R12 with the same distribution of areas, but a more fair comparison would be to compare with a R12 system whose areas were distribution in a proportion that would be optimum for the R12 system. Such a distribution was:

low-temperature evaporator,	0.46 m^2
high-temperature evaporator,	0.12 m^2
high-temperature heat exchanger,	0.00 m^2
low-temperature heat exchanger,	0.00 m^2
low-temperature condenser	0.46 m^2
high-temperature condenser	0.46 m^2

The heat exchangers are not useful in the R12 system and the optimization shows it preferable to use the surface elsewhere. This optimized R12 system showed a power requirement of 1.26 kW, so the optimized refrigerant mixture system shows a 9.1 percent reduction in power over a single R12 system. This figure is less than the 12 percent reduction cited in the 1978 ORNL-UI study, but that comparison was not being made against an R12 system with the optimum distribution of areas.

Another point of significance emerging from the optimization study was the fact that the optimum area of the low-temperature heat exchanger was quite small (0.02 m^2). It is conceivable that the low-temperature heat exchanger could be eliminated entirely which would have benefits from a product design and manufacturing standpoint. In a reconstruction of the evaporators in the test facility following the optimization study, a bypass line was constructed around the low-temperature evaporator so that the performance of the system with and without this heat exchanger could be compared.

2-6. Optimum concentration. The optimum concentration shown by the simulations in the 1978 study was a 50-50 percent mixture of R12 and R114. The most recent optimization showed the optimum concentration to be 68 percent R114. It would seem reasonable that a single evaporator system would find the most favorable concentration to be the one matching the change in refrigerant temperature with the change in temperature of fluid being cooled. Several

different concentrations and their results are shown in Fig. 2-3. Figures 2-3a through 2-3d show temperature distributions of the fluid being cooled and of the refrigerant for concentrations of 0, 30, 50, and 70 percent R114. Figure 2-3e shows the temperature bands on a t-x chart at the various pressures that provide the required temperature level of refrigerant. If the rise in refrigerant temperature at the 30 and 70 percent concentrations equals that of the drop in temperature of fluid being chilled, the temperature profiles are straight lines with a uniform temperature difference throughout the heat exchanger. Intuitively 30 percent or the 70 percent concentrations appear to be the most favorable, because the same temperature difference is imposed on all the heat-exchange area. In the case of 0 percent R114, for example, the saving in area at the right end of the chart because of the high temperature difference does not compensate for the additional area need at the left side with the low temperature difference.

Based on the foregoing proposals it would seem that two concentrations would provide optima, but the simulation showed the energy requirements with 70 percent R114 to be 1.4 percent less than with the concentration giving the corresponding temperature rise occurring at approximately 30 percent R114. No explanation is available at this time other than that R114 as a single refrigerant might have more favorable characteristics than R12 operating as a single refrigerant.

Another reservation about the specific results of the optimum concentration concerns the entering temperatures of fluid being cooled that were used in the simulation. The temperature of glycol entering the high-temperature evaporator was -10^{0}C and that entering the low temperature evaporator -15^{0}C. In the experimental tests reported in Chapter 4 the glycol temperature entering the high-temperature evaporator was 5°C and entering the

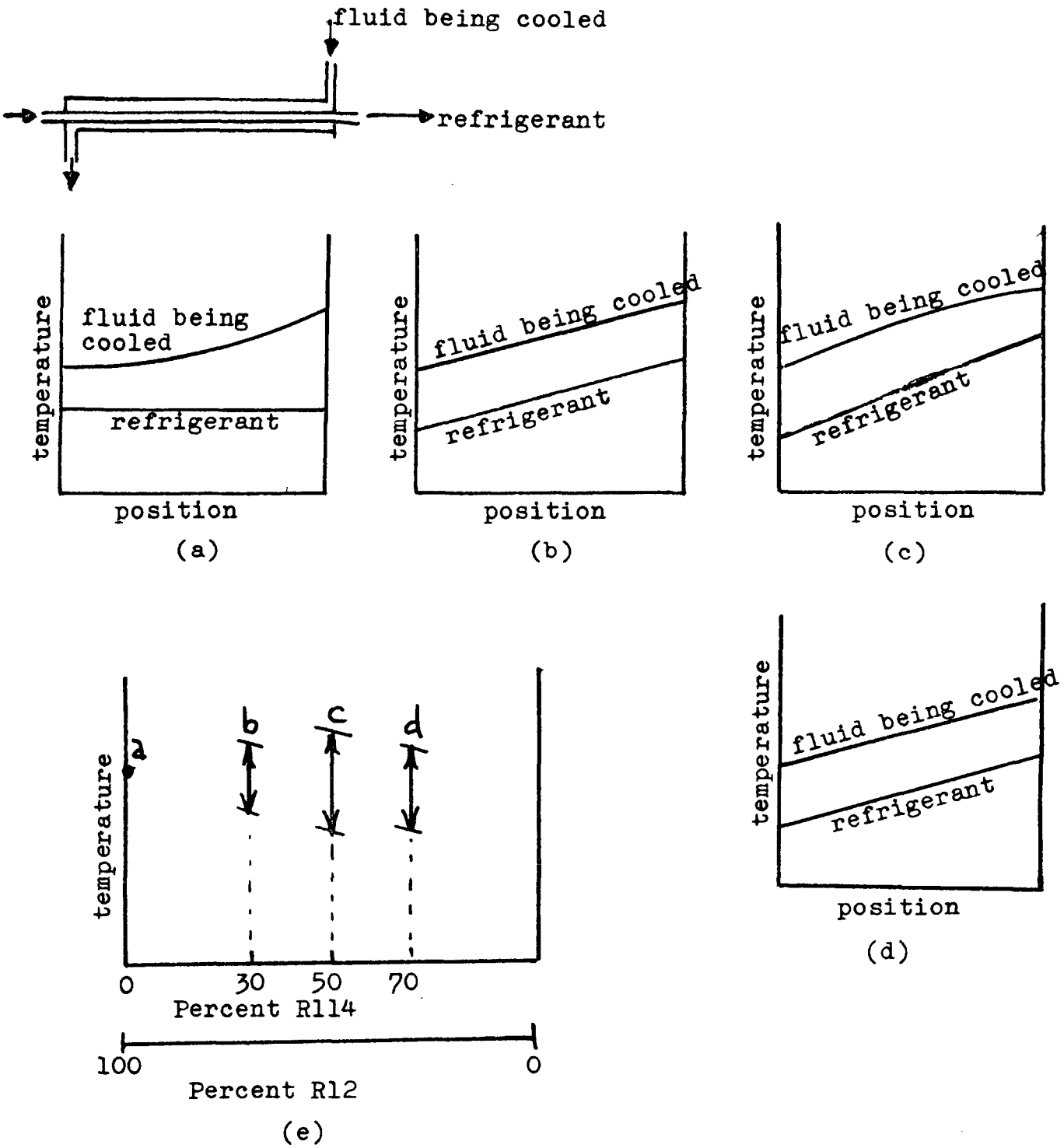

Fig. 2-3. Temperature distributions of fluid being cooled and refrigerant at various mixture concentrations.

low-temperature evaporator was -10°C. This choice of glycol temperatures is different than used by Launay for the optimizations, but it was felt that the choice made for the experiments was more representative of temperatures to be encountered in a domestic refrigerator. This wider spread of temperatures entering the evaporators would likely influence the optimum concentration toward that giving the maximum change of refrigerant temperatures, as illustrated in Fig. 2-4.

Even if there were a slight reduction in compressor power for 60 percent R114 in comparison to 40 percent R114, for example, it is likely that the lower concentration of R114 would be chosen for two reasons: (1) higher pressure in the evaporators (less vacuum), and (2) higher density of the vapor (lower displacement).

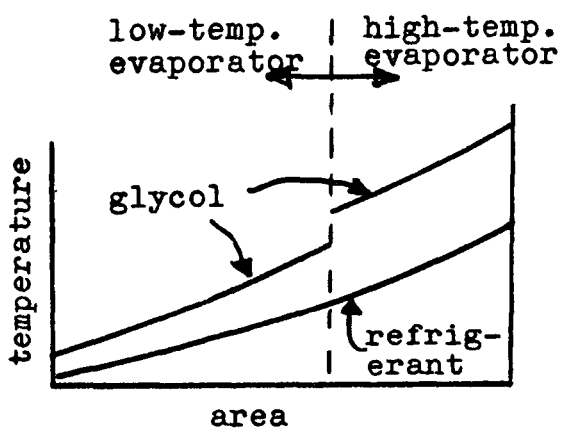

Fig. 2-4. Temperature profiles with two evaporators.

3. TEST FACILITY AND TEST PROCEDURE

3-1. Purposes of experimental tests. Our own analtyical studies as well as those of others consistently show that energy can be conserved by the proper application of refrigerant mixtures. The need for laboratory verification comes not from doubt about the validity of the thermodynamic and heat-transfer laws, but because additional phenomena often intervene which may reduce or even nullify the theoretical gains. The experimental study represents, then, the major step into realism by either verifying the proposed improvements, or trying to discover the specific reasons why the theortical improvements were not realized. Some of the byproducts of the experimental studies are not predictable, but emerge because of problems that arise and must be solved in order to conduct the tests. The knowledge thus obtained is often useful in ultimate applications of the concept.

3-2. Overall description of the system. The schematic diagram of the fluid streams in the test facility is shown in Fig. 3-1. The refrigerant circuit will be traced first. Starting at the compressor the high-pressure refrigerant flows in turn through the high-temperature condenser and then the low-temperature condenser. Liquid refrigerant that is usually subcooled leaves the low-temperature condenser and enters the high-temperature heat exchanger and then the low-temperature heat exchanger. In both these heat exchangers the liquid refrigerant subcools further. The refrigerant next enters the expansion valve where the pressure drops and some of the liquid flashes into vapor. From here the refrigerant flows through the low-temperature side of the low-temperature heat exchanger continuing its vaporization. Next the refrigerant flows through the high-temperature evaporator and then on to the high-temperature heat exchanger. Once through the high-temperature heat exchanger the refrigerant returns to the

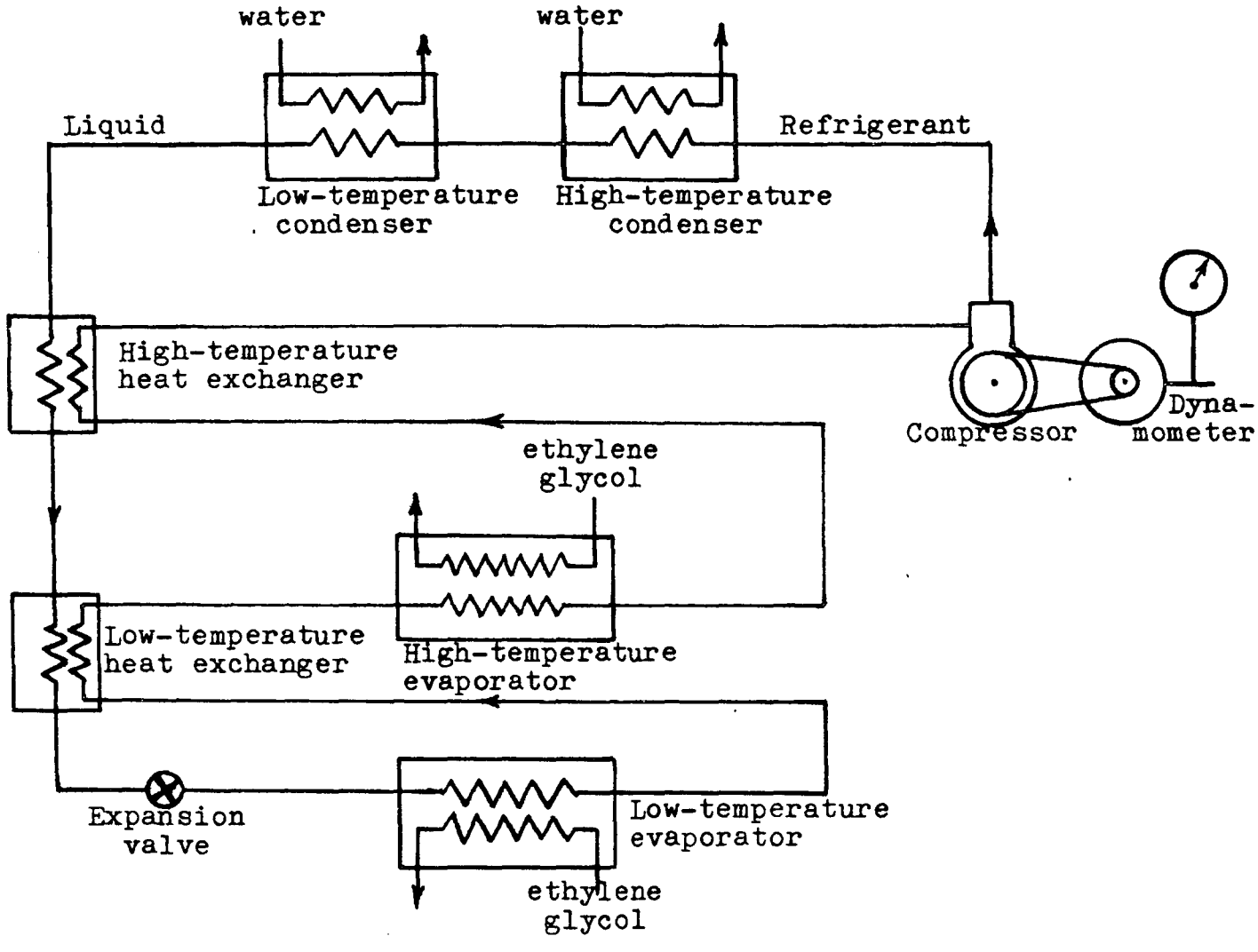

Fig. 3-1. Flow diagram of the test facility.

compressor. The point at which superheating begins was specified at the exit of the high-temperature heat exchanger in the 1978 study, but in Launay's report the position adjusted itself where necessary in the high-temperature heat exchanger. During the tests reported in the next chapter it was found necessary to back the liquid/superheat interface a greater distance into the high-temperature evaporator.

Each of the condensers receives a supply of tap water as the cooling fluid. Ethylene glycol water solutions are the fluids being chilled in the evaporators. The remainder of each glycol loop consisted of a pump, electric heater, and rotameter for flow measurment.

3-3. Specification of components. The most favorable circuiting for condensers, evaporators and refrigerant-to-refrigerant heat exchangers in a refrigerant mixture is counter-flow. Counterflow heat exchange was achieved by construction of tube-in-tube heat exchangers. The typical arrangement of multi-pass condensers and evaporators is shown in Fig. 3-2. Refrigerant flowed through the inner tube while ethylene glycol flowed through the annular space of the evaporators and water through the annular space of the condensers. In the refrigerant-to-refrigerant heat exchangers the liquid being subcooled flowed through the annular space and the cold refrigerant through the inner tube. The specifications of the heat exchangers are shown in Table 3-1.

The arrangement for measuring refrigerant temperatures and temperatures of inner tubes is shown in Fig. 3-3. A fine tube containing the thermocouple was held in place by a star-shaped acrylic plastic holder as shown in Fig. 3-3b.

In the initial system the same diameter tubes were used for all the condensers and evaporators, namely 25.4 mm ID and 28.6 mm OD for the outer

Table 3-1. Specifications of condensers, evaporators, and refrigerant-to-refrigerant heat exchangers

Component	Number of passes	Length of refrigerant section of each pass, m	ID and OD of outer tube, mm	ID and OD of inner tube, mm	Refrigerant-side heat-transfer area m^2
Low temperature evaporator	3	1: 3.683 2: 3.683 3: 1.854	ID = 31.75 OD = 34.93	ID = 19.05 OD = 22.23	0.5518
High temperature evaporator	2	3.0734	ID = 31.75 OD = 34.93	ID = 19.05 OD = 22.23	0.3679
Low-temperature condenser	3	3.1242	ID = 25.40 OD = 28.58	ID = 12.70 OD = 15.88	0.3739
High-temperature	3	3.1242	ID = 25.40 OD = 28.58	ID = 12.70 OD = 15.88	0.3739
Low-temperature heat exchanger	1	1.549	ID = 31.75 OD = 34.93	ID = 19.05 OD = 22.22	Inner: 0.0927 Outer: 0.1082
High-temperature heat exchanger	1	1.549	ID = 31.75 OD = 34.93	ID = 19.05 OD = 22.22	Inner: 0.0927 Outer: 0.1082

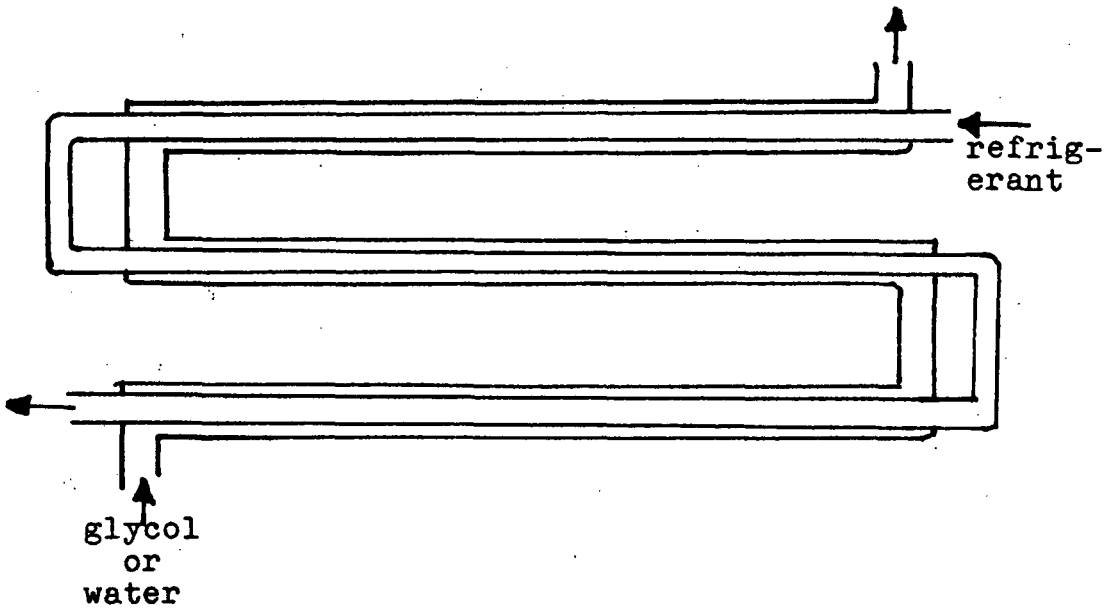

Fig. 3-2. Counterflow condensers and evaporators.

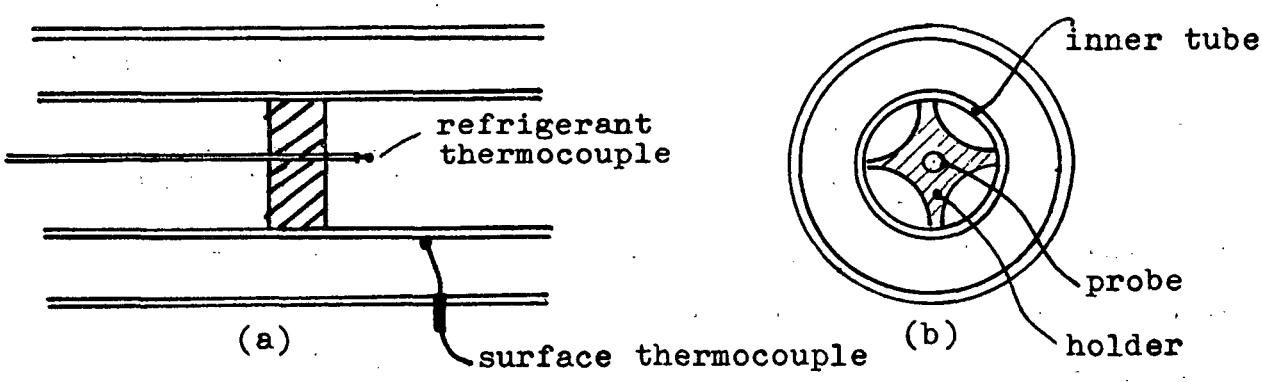

Fig. 3-3. Thermocouple placement.

tube; and 12.7 mm ID and 15.9 mm OD for the inner tube. Initial tests of the system showed excessively high pressure drops, particularly in the evaporators. In tests with 100 percent R12 the pressure drop was of the order of 80-100 kPa resulting in appreciable drops in temperature along the evaporator. It was feared that when the less-dense refrigerant mixture was used that the pressure drop would be even more penalizing and perhaps prevent the necessary rise of temperature during evaporation. The evaporators were therefore reconstructed with larger diameter tubes (as shown in Table 3-1), and the thermocouples to measure the refrigerant temperatures were held in place with stiff wire which would cause less pressure drop than the star-shaped holders.

The compressor was an open-type, three-cylinder, model CK manufactured by Tecumseh Products, with a bore of 90 mm (3-1/4 inches) and a stroke of 76.2 mm (3 inches). The compressor was belt-driven from a variable-speed dynamometer equipped with a tachometer and a spring scale for measuring the force of the torque arm.

The expansion valve was a hand-operated Marsh stainless steel needle valve, N-1313-FFC, with 3/8 inch connections.

3-4. Instrumentation. The major groups of instrumentation were for measurement of temperatures, pressures, flow rates, and electric voltage and current. In addition, the rotative speed of the electric motor driving the compressor and the dynamometer force were measured. The locations of the thermocouples are shown in the diagram on Fig. 3-4. Thermocouples were inserted in the fluid streams to measure the temperatures of refrigerant, ethylene glycol, and water. Thermocouples were soldered on the outside surface of inner tubes (refrigerant tubes) to measure surface temperatures. One thermocouple (No. 24) was inserted in an ice bath for calibration

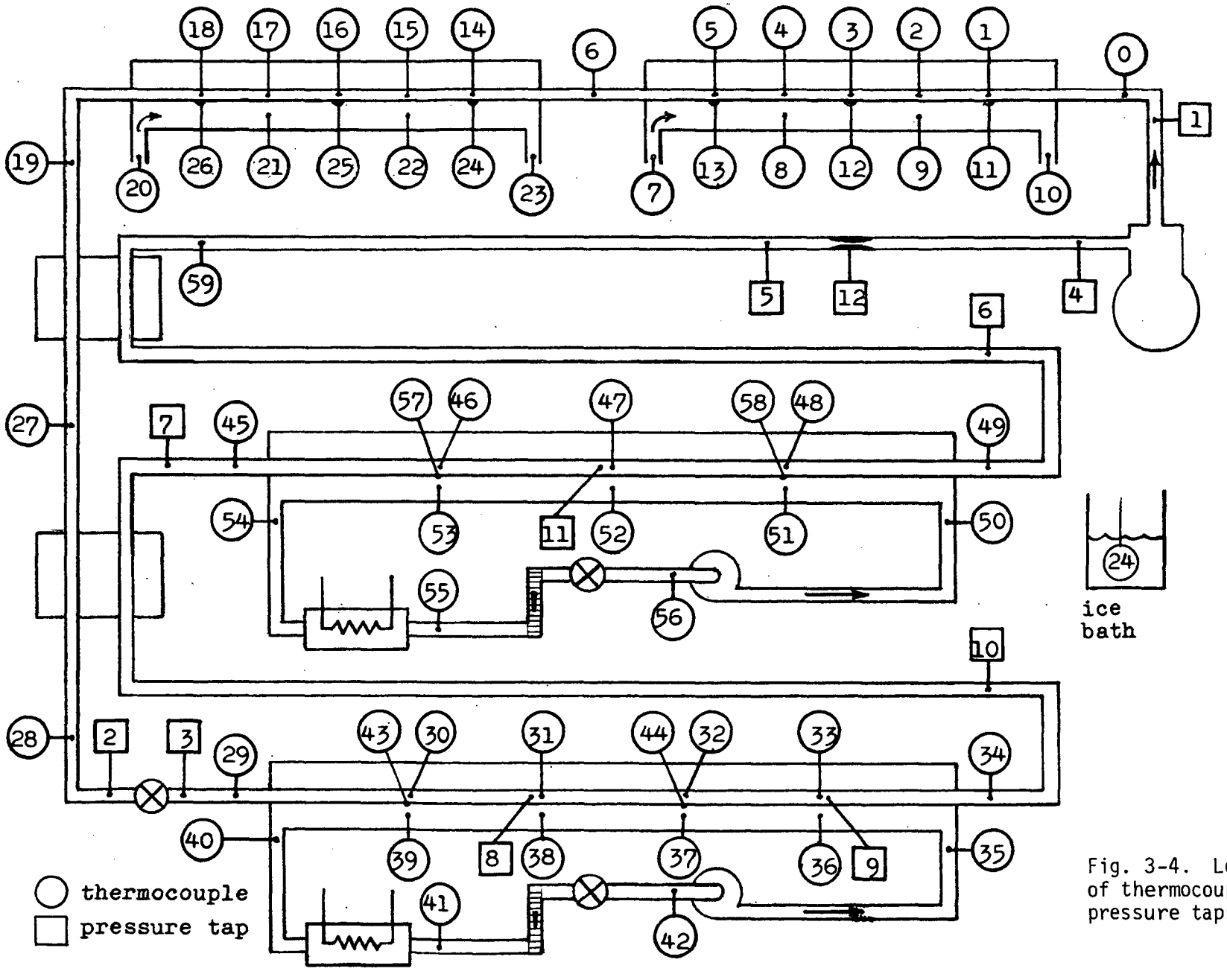

Fig. 3-4. Location of thermocouples and pressure taps.

purposes. The pressure readings, all taken with pressure gauges, measured pressure drops in heat exchangers and checked pressure-temperature combinations against theoretical values for refrigerant mixtures.

The flow rates of cooling water to the condensers were measured by timing the volume flow as measured by integrating flow meters. The flow rates of ethylene glycol for each of the evaporators were measured by rotameters (Fisher and Porter, 3555148, 1/2 inch) calibrated to show a 100 percent reading when passing 1.56 gallons per minute of water at 70 °F. Corrections were made on the 100 percent value for differences in the density and viscosity of the glycol.

The flow rate of refrigerant was measured with a rotameter and a venturi. The rotameter is a Fisher and Porter, No. 3555151, 3/4 inch, rated at 1.96 gpm of water at 70 °F giving 100 percent flow. The venturi, located in the suction line before the compressor at pressure tap 12 in Fig. 3-4, is a Barco with a 3/4 inch diameter upstream section and a ratio of throat to upstream diameter of 0.39.

3-5. Test procedure. A series of tests were conducted with different concentrations of the R12-R114 mixture. In order to identify the influence of the concentraion on the energy requirements at the compressor a fair basis had to be established for both the refrigerating capacity and temperature levels of fluid being cooled. The refrigeration load for the low-temperature evaporator was assigned to be twice that of the high-temperature evaporator, basing this 2:1 ratio on the distribution in a typical domestic refrigerator. The temperaure levels of ethylene glycol were set at 5°C entering and 0°C leaving the high-temperature evaporator and -10°C entering and -20°C leaving the low-temperature evaporator.

A further parameter to be fixed was the flow rate of glycol which would determine the actual refrigeration rates in watts. The capabilities of the system (especailly the compressor) entered into the decision of the refrigeration rates. Because the density of refrigerant vapor decreases as the fraction of R114 increased, the speed of the compressor had to be changed for each different concentration to maintain constant capacity. The limit of refrigeration capacity was therefore imposed on the system at a maximum R114 concentration of 50 percent while the compressor was operating at full speed. As will be pointed out later in Chapter 4, a situation was reached where further increases in compressor speed did not increase the refrigerating capacity. But the highest refrigeration capacity with 50 percent R114 dictated the capacity that was then held at lower concentrations of R114 by reducing the compressor speed.

The charging of the system with a mixture was accomplished by measuring desired volumes of liquid R114 and R12 into the system. The R114 was added first since it was the low-pressure refrigerant, and the R12 addition followed. The lower limit of the refrigerant charge was the amount of refrigerant that would just allow saturated liquid at the outlet of the low-temperature condenser. Additional charge above the magnitude resulted in subooling of liquid in the condenser. During all the tests we maintained several degrees of subcooling in the condenser to assure at least saturated liquid at the condenser outlet.

Following charging of the system with the desired concentration of refrigerant, the facility was adjusted to obtain the desired glycol temperatures in and out of the two evaporators. The following adjustments were available: (1) compressor speed, (2) expansion valve setting, and (3) electric heater power input to each of the two glycol loops. Any one

adjustment affected the entire system performance, so repeated adjustments were needed to achieve the desired glycol temperatures. Each of the adjustments had a predominant influence on one operating variable, namely,

compressor speed: temperature level of the boiling refrigerant in both evaporators, and therby on the temperature levels of the glycol as well.

expansion valve: position at which superheating began in the low-pressure chain of components. Opening the expansion valve wider shifted the point of the onset of superheating further toward the compressor. The superheat position predominately affected the capacity of the high-temperature evaporator. The compressor speed primarily affected the glycol temperatures in the low-temperature evaporator, while the expansion valve setting affected the level of glycol temperatures in the high-temperature evaporator.

electric power to heaters: variable transformers controlled the power to the heaters in each of the glycol circuits, and these transformers were used to regulate the temperature difference of the glycol in and out of the evaporator.

In order to achieve steady-state conditions, intervals of anywhere from two to eight hours of operation were necessary. As is typical of thermal systems some drifting of temperatures and pressures occurs even if all of the settings remained constant. It was not possible in most cases to precisely achieve the desired glycol temperatures, but the temperatures were generally held within 0.1°C of the target values.

4. REFRIGERANT MIXTURE TESTS--RESULTS AND ANALYSIS

4-1. Overall description of tests. Two series of tests are reported and analyzed in this chapter--one at a higher glycol flow rate than the other. Each of these series was conducted through the spectrum of R114 concentrations from zero to 50 percent by mass with the exception of one test where the R114 concentration was 61.5 percent. A summary of key variables of these tests is shown in Table 4-1.

The rates of heat transfer in the two evaporators for the various tests are presented in Table 4-2. It was the intent to maintain identical refrigeration capacities in a given evaporator during a test series, and Table 4-2 shows that there is some variation due to the inability to maintain precise conditions during the experiments.

4-2. Compressor performance and capacity limitations. As the concentration of R114 increases, the specific volume of the refrigerant entering the compressor increases, so we anticipated the need of increasing the compressor speed to compensate for the change in specific volume. Expecting to approximately double the compressor speed in changing from 0 to 50 percent R114, a preliminary test with R12 at a dynamometer speed of 800 rpm suggested that the dynamometer speed should be somewhere between 1600 and 2000 rpm to achieve the same capacity with a 50-percent R114 mixture. The rotative speed of the compressor was 44 percent that of the dynamometer. We found that even running at a dynamometer speed of 3000 rpm did not duplicate the refrigeration capacities of the 800 rpm zero-percent R114 test. The actual capacities achieved at the 3000 rpm test were then chosen as the base capacities for the tests with lower R114 concentrations. In replicating the 50-percent R114 test we found, however, that we could achieve the new base capacities at a dynamometer speed of 1600 rpm. In other words, increasing the

Table 4-1. Overview of tests

Test number	Date 1981	Percent R114	Glycol flow rate, kg/s		Glycol temperatures, °C			
					Low-temp evap.		High-temp evap.	
			HTE	LTE	Enter	Leave	Enter	Leave
1	9/23	0	0.0489	0.0518	-10.0	-20.4	5.4	-0.5
2	9/18	10	0.0489	0.0518	-9.9	-19.9	4.9	-0.1
3	9/22	20	0.0489	0.0518	-10.1	-20.0	5.1	0.0
4	9/25	30	0.0489	0.0510	-10.0	-20.2	5.0	-0.2
5	9/25	40	0.0489	0.0510	-9.9	-19.8	5.0	0.0
6	9/16	50	0.0489	0.0518	-9.9	-20.0	4.8	-0.1
7	9/22	0	0.0430	0.0458	-10.1	-19.9	5.1	0.1
8	9/18	10	0.0430	0.0467	-9.9	-19.5	4.8	-0.2
9	9/23	20	0.0430	0.0458	-9.8	-19.5	4.9	0.4
10	9/12	30	0.0426	0.0458	-10.1	-19.9	5.1	-0.1
11	9/15	40	0.0432	0.0460	-9.8	-19.9	5.1	-0.2
12	9/16	50	0.0430	0.0449	-9.9	-20.0	5.1	0.1
13	9/16	61.5	0.0430	0.0458	-10.0	-19.7	4.9	0.1

Table 4-2 Refrigeration capacities in each evaporator

Test	Refrigeration capacities, kW Low-temp. evap.	High-temp. evap.
High-Capacity Tests		
1	1.597	0.779
2	1.537	0.762
3	1.522	0.770
4	1.541	0.792
5	1.497	0.761
6	1.552	0.746
Low-Capacity Tests		
7	1.333	0.670
8	1.325	0.668
9	1.319	0.602
10	1.333	0.691
11	1.374	0.713
12	1.343	0.670
13	1.319	0.642

dynamometer speed from 1600 rpm to 3000 rpm did not increase the refrigerating capacity. This phenomenon influenced the choice of base capacities for the two test series described in this report.

An explanation for the non-linear compressor capacity is not yet available. It would be particularly useful to determine whether the reason is attributable to a specific characteristics of our test stand, or whether other compressors and systems will exhibit the same behavior with high R114 concentrations and low suction pressures.

The required dynamometer speeds in the two series of tests is shown in Table 4-3. The specific volumes of vapor entering the compressor are shown in Fig. 4-1. Also shown in Fig. 4-1 are the ratios of the compressor volumetric efficiencies based on the volumetric efficiency with 100 percent R12. There is a progressive drop in volumetric efficiency as the speed increases with an abrupt drop occurring in the low-capacity series at 61.5 percent R114. When the concentration was increased to 61.5 percent the dynamometer speed had to

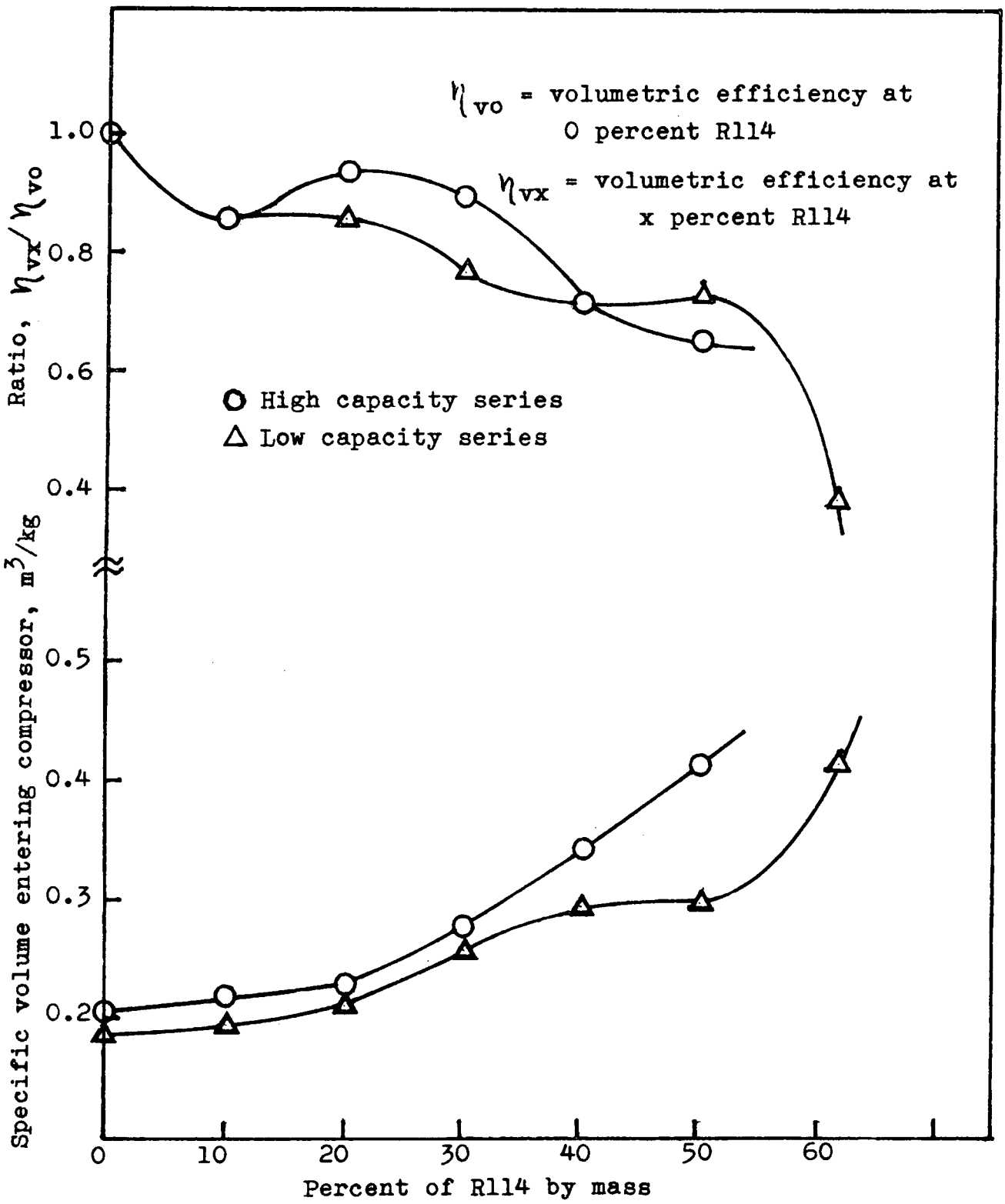

Fig. 4-1. Specific volume entering compressor and ratio of volumetric efficiences to that of zero-percent R114.

Table 4-3. Dynamometer speeds

Concentration of R114, percent	Dynamometer/compressor speed, rpm High-capacity series	Low-capacity series
0	295/130	220/97
10	380/167	300/132
20	380/167	320/141
30	520/229	430/189
40	700/308	500/220
50	1010/444	1400/616

be increased to 1400 rpm to achieve the specified capacity, thus indicating high nonlinearity.

When forced to operate at these lower refrigeration capacities, some of the rate measurements were lower than the levels for which the instrumentation was designed and caused some inconsistencies in the experimental data.

4-3. Compressor power. Central to this study is the investigation of whether energy can be conserved through the use of refrigerant mixtures. The test stand is equipped with a variable-speed dynamoeter to drive the compressor, and the objective of this device was to measure the power. Direct use of the power measurements from the dynamometer are not valid, because the power dissipation in the electric motor, the belt drive, and friction in the compressor are functions of the compressor speed. In order to deduct these losses from the total power measurement, it is necessary to measure mechanical losses through variable speed tests with no pressure rise through the compressor. Each such auxiliary test might be misleading at high compressor speeds where the anomalies mentioned in the previous section exist. The power requirements determined through the dynamometer readings are shown in Fig. 4-2 and generally indicate an increase in power requirements as

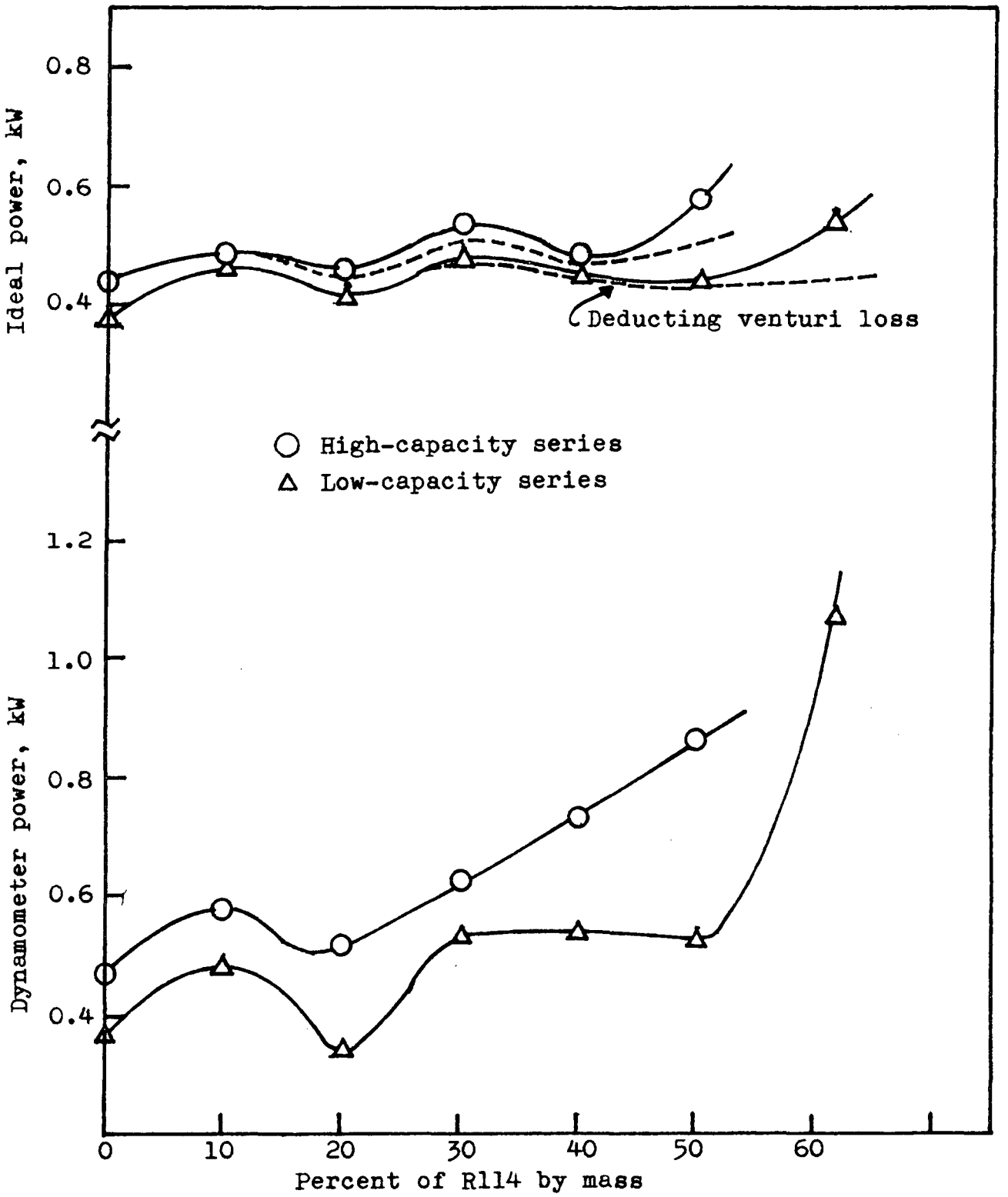

Fig. 4-2. Ideal compressor power and power measured by dynamometer.

the concentration of R114 increases. The power required at the one 61.5 percent R114 test was abnormally high and was associated with the abrupt increase in compressor speed, as shown in Table 4-3. At the present time the chief benefit of the dynamometer is its variable-speed capability.

As an alternate means of estimating the compressor power the actual refrigerant flow rate was multipled by the calculated isentropic increase in enthalpy,

Power, kW = (refrigerant flow rate, kg/s)(enthalpy rise, kJ/kg).

The isentropic enthalpy rise was computed by calculating the entropy and enthalpy (Appendix A2) using the measured values of temperature and pressure entering the compressor. At this same entropy and the measured discharge pressure, the enthalpy following the compressor was computed. The results of these determinations are also shown on Fig. 4-2. The trends are inconclusive because of the variations of the data points from a smooth curve. If any trends can be assessed, there is a slight increase in power rather than the decrease expected. The need to operate at low refrigeration capacities is at least one contributor to the inability to achieve consistent data. Further explanations are sought in the discussion that continues in this chapter.

4-4. Compressor pressures and pressure ratios. One of the first conditions to turn to for the explanation of the compressor power requirements is the behavior of the suction and discharge pressure and their ratios. The pressures influence the ideal compressor power (Fig. 4-2) in a very direct manner, since they appear in the calculation of the isentropic rise in enthalpy through the compressor.

The trends of the pressures and their ratios are shown in Fig. 4-3. The suction pressure decreases progressively as the concentration of R114 increases, and furthermore the suction pressure (and thus the evaporating

temperatures) are lower for the high-capacity series than for the low-capacity series. The trends of the suction pressure thus seem consistent. The discharge pressures should also decrease steadily, and while there is a general decline in these pressures, they are somewhat erratic.

The pressure ratios are also shown in Fig. 4-3. One of the reasons often given for considering a mixture of refrigerants, rather than a single one is that the pressure ratio with a mixture is less than with a single refrigerant. Figure 4-3 shows an increase in the pressure ratio as the concentration increases. It seemed worthwhile to return to simulation results to see whether the reduction in pressure ratio could be expected. Table 4-4 shows pressure ratios determined during the 1978 simulations.

Table 4-4. Pressure ratios from simulations.

Concentration, percent R114	Pressure ratio
0	8.13
10	7.93
20	7.85
30	7.91
40	8.09
50	8.38
60	8.80

As the percent R114 increases the pressure ratio first drops before rising again at high concentrations of R114. The fact that the pressure ratio during the tests generally increases in R114 concentrations may indicate one

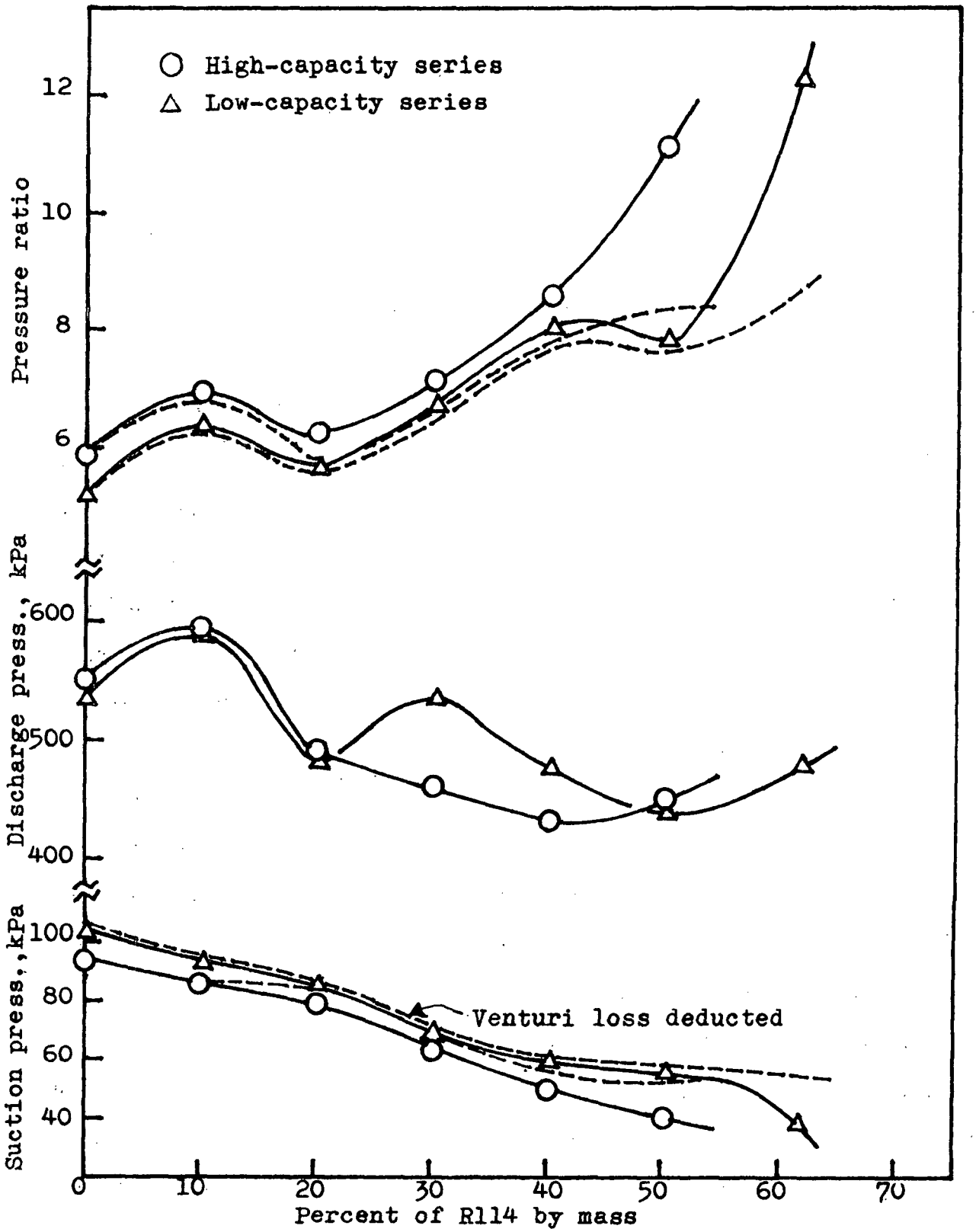

Fig. 4-3. Suction and discharge pressures of compressor and pressure ratio.

reason for the failure of the power requirement to drop when the R114 concentration increased.

4-5. Condenser performance. The search for the explanation why the compressor power does not drop first focuses on the condensing pressure. Figure 4-3 shows a consistent drop in suction pressure as the R114 concentration increases. The discharge pressure, on the other hand, is erratic rather than also showing a consistent decrease. Examination of the temperature distribution of the refrigerant in the condenser (Fig. 4-4) for several tests shows a rapid reduction in the refrigerant temperature in the initial area contacted by the refrigerant. The change is so rapid that it is not possible to distinguish which is the desuperheating region and which the condensing region. For most of the condenser, subcooling of the liquid takes place which is indicated by a rather slow drop in temperature during which time the refrigerant temperature is very close to that of the cooling water.

Of significance is the fact that many of the tests were run with an excessive charge of refrigerant. We always checked to be sure that we had subcooled liquid leaving the low-temperature condenser, but now find that a smaller total refrigerant charge would have accomplished the subcooling and also allowed more heat-transfer area for desuperheating and condensing. The additional area for condensing would have reduced the discharge pressure and resulted in low power requirements.

The total refrigerant charge in each of the tests is shown in Table 4-5. We expect that a slightly greater charge will be needed at high concentrations of R114. With high R114 concentrations the evaporating temperature in the high-temperature evaporator is elevated, so that the point at which superheat

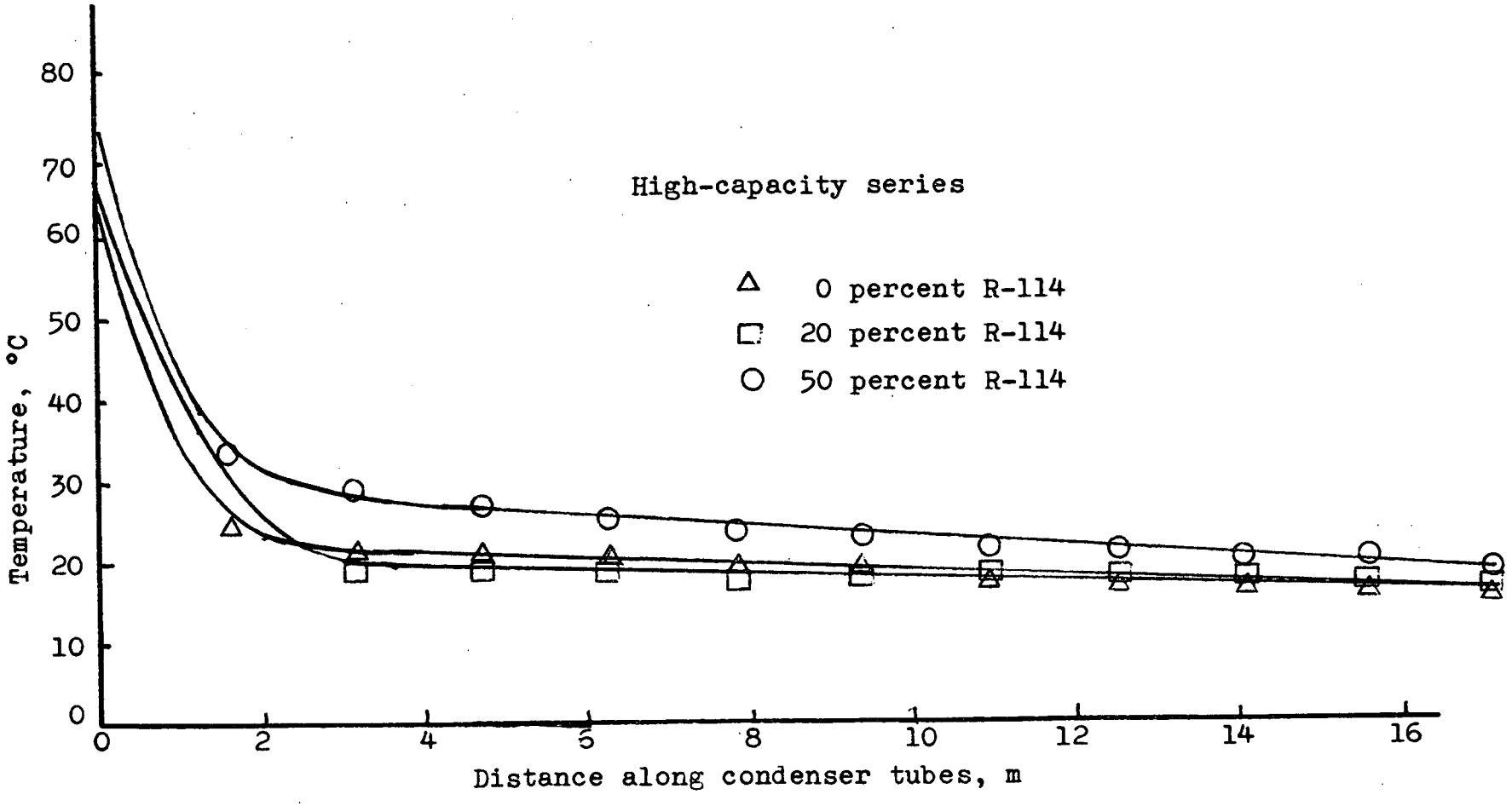

Fig. 4-4. Temperature profiles of refrigerant in condenser.

Table 4-5 Total refrigerant charges for tests.

Test number	Refrigerant charge, kg
1	5.44
2	6.94
3	6.81
4	5.96
5	6.95
6	6.80
7	5.44
8	6.94
9	6.81
10	7.16
11	6.61
12	6.80
13	5.53

begins must be shifted toward the compressor. In doing so, a greater mass of refrigerant exists in the evaporator which must be compensated for by a higher total charge.

From the heat-transfer mesurements the overall heat-transfer coefficients (U-values) have been estimated for the desuperheating and condensing portions of the condenser. The values are approximate because of the inability to precisely determine where desuperheating stopped and condensing began. The first pass of the high-temperature condenser was assumed to perform primarily desuperheating and the U-value there was an average of 270 $W/m^2 \cdot K$. The second pass of the high-temperature condenser was assumed to perform primarily condensing and the U-value in this pass averaged 1015 $W/m^2 \cdot K$.

4-6. Boiling heat tranfer coefficients. Two objectives of the tests related to heat-transfer coefficients were (1) to determine more-realistic U-values to use in the simulation program, and (2) to obtain data on the effect of the refrigerant concentration on boiling and condensing heat-transfer coefficients. Among the thermocouples described in Section 3-4 were the surface thermocouples bounded to the inner tube of the condensers and

evaporators at the same locations where the refrigerant and glycol or cooling water were also measured. By determining the heat flux using heat-transfer rates for the section in which the surface and fluid thermocouples were located, the flux divided by the measured temperature difference yielded the heat transfer coefficient. Using this technique the coefficients shown in Table 4-6 for the low-temperature and high-temperature evaporators, respectively, were determined.

There is considerable scatter of the values which is at least partially attributable to the low heat transfer rates at which it was necessary to run the tests. No conclusions can be drawn about the influence of the R114 concentration on the magnitudes of the boiling coefficients. The only observations that can be made pertain to the order of magnitude of the coefficients.

Table 4-6 shows heat-transfer coefficients for two of the three passes of the low-temperature evaporator. The coefficients in the first pass range between 100 and 200 $W/m^2 \cdot K$, while those in the second pass are much higher (600 to 1200 $W/m^2 \cdot K$). The expected progression of heat-transfer coefficients as a boiling fluid passes through a tube is a low value near the entrance and then increasing progressively until a final drop-off near the end of the tube. The heat-transfer coefficient during superheating is normally lower than any experienced within the boiling region. With the forgoing expectation of heat-transfer coefficient magnitudes the data correspond to expectation with a low coefficient early in the evaporator (first pass, low-temperature), the highest values experienced in the second pass of the low-temperature evaporator, and finally dropping to a low value in what is the superheat region of the high-temperature evaporator.

Table 4-6. The refrigerant-side heat transfer coefficients in the evaporators.

Percent R114 by mass	Refrigerant heat-transfer coefficients, $W/m^2 \cdot K$			
	High-capacity series		Low-capacity series	
	First pass	Second pass	First pass	Second pass
	High Temperature Evaporator			
0	223	59	248	39
10	214	10	257	0
20	192	22	258	0
30	226	86	217	75
40	265	16	260	14
50	234	23	253	41
61.5	227	33	-	-
	Low Temperature Evaporator			
0	-	948	223	834
10	95	890	171	965
20	27	1045	105	1217
30	125	878	198	645
40	114	945	175	546
50	154	903	230	691
61.5	130	935	-	-

Even the highest values of heat-transfer coefficients experienced in the second pass of the low-temperature evaporator are lower than the 2,000 $W/m^2 \cdot K$ that might be expected as typical of tube-type evaporation. The regrigerant flow rates and heat fluxes might be reasons for these low values. The magnitudes of the convection coefficients in the superheated region of the second pass in the high-temperature evaporator are not surprising. It is unexpected, however, that the heat transfer coefficients are so low in the first pass of the low-temperature evaporator, and suggests investigating whether there is so much subcooling of the refrigerant entering the expansion valve that the refrigerant in the first pass of the evaporator is still liquid or at least has a very low fraction of vapor with the resultant low velocity.

4-7. Refrigerant temperature distribution in the evaporators. Figures 4-5 and 4-6 show temperature distributions of refrigerant in the low- and high-temperature evaporators, respectively. With zero percent R114 (R12 only) it would be expected that in the boiling region the refrigerant temperature would remain essentially constant or drop sligthly because of pressure drop in the tube. In the superheat region the temperature rises rapidly. At higher concentrations of R114 a rise in temperature during evaporation is expected. Figure 4-5 shows for 100 percent R12 a slight drop in temperature, then a rise and fall once again. The early drop in temperature in the first pass of the evaporator could be explained by a drop in refrigerant pressure, but the rise thereafter and subsequent drop in temperature cannot be explained. The trend in the 50 percent R114 concentration is more reasonable. Furthermore, in order to achieve the specified heat-transfer rate in the low-temperature evaporator a crossover of temperature distribution curves would be expected with the high concentration of R114 starting at a lower temperature and then increasing to a higher temperature than that of R12 only.

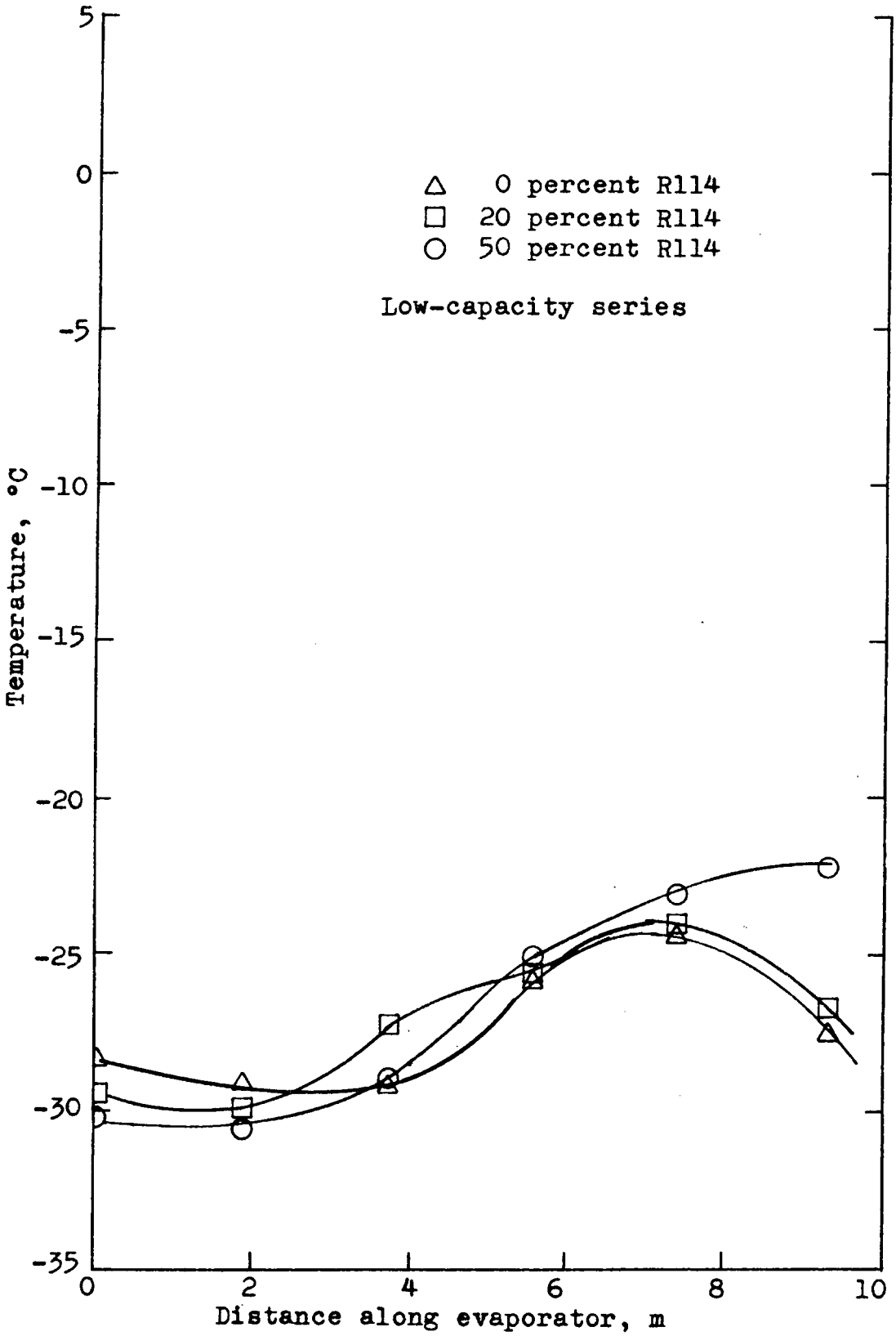

Fig. 4-5. Temperature profiles of refrigerant through low-temperature evaporator.

In the high-temperature evaporator whose refrigerant temperature profiles are shown in Fig. 4-6 much of the evaporator is performing superheating as evidenced by the steep rise in refrigerant temperatures. As expected, the mean refrigerant temperatures are approximately the same for the three concentrations shown. When the leaving temperatures from the low-temperature evaporator are compared with the entering temperature to the high-temperature evaporator, a drop in temperature appears--a change that takes place through the low-temperature refrigerant-to-refrigerant heat exchanger. Such a drop in temperature can only be attributed to a pressure drop in the heat exchanger that even overcomes the progressive rise in temperature during boiling of the mixture. The pressure readings taken during the test show a pressure drop of about 4 kPa typically occurring between these two points, which would explain approximately a 2°C drop in temperature.

4-8. Refrigerant-to-refrigerant heat exchanger coefficients. The overall heat-transfer coefficients of the two refrigerant-to-refrigerant heat exchangers could be determined from data on the rate of heat transfer in the heat exchanger divided by the logarithmic-mean-temperature difference. The rate of heat transfer in watts was determined from the high-pressure side (liquid), because, if there were a change in phase on the low-pressure side, the vapor fractions and thus the enthalpies of the refirgerant would not be known. The overall heat-transfer coefficients are presented in Fig. 4-7 for the two heat exchangers and for the two series of tests. The average U-value for the low-temperature evaporator is attributable to the higher heat-transfer coefficients on the low-pressure side due to boiling in the low-temperature heat exchanger. In the high-temperature heat exchanger, superheating is likely to be occurring for all or most of the tests.

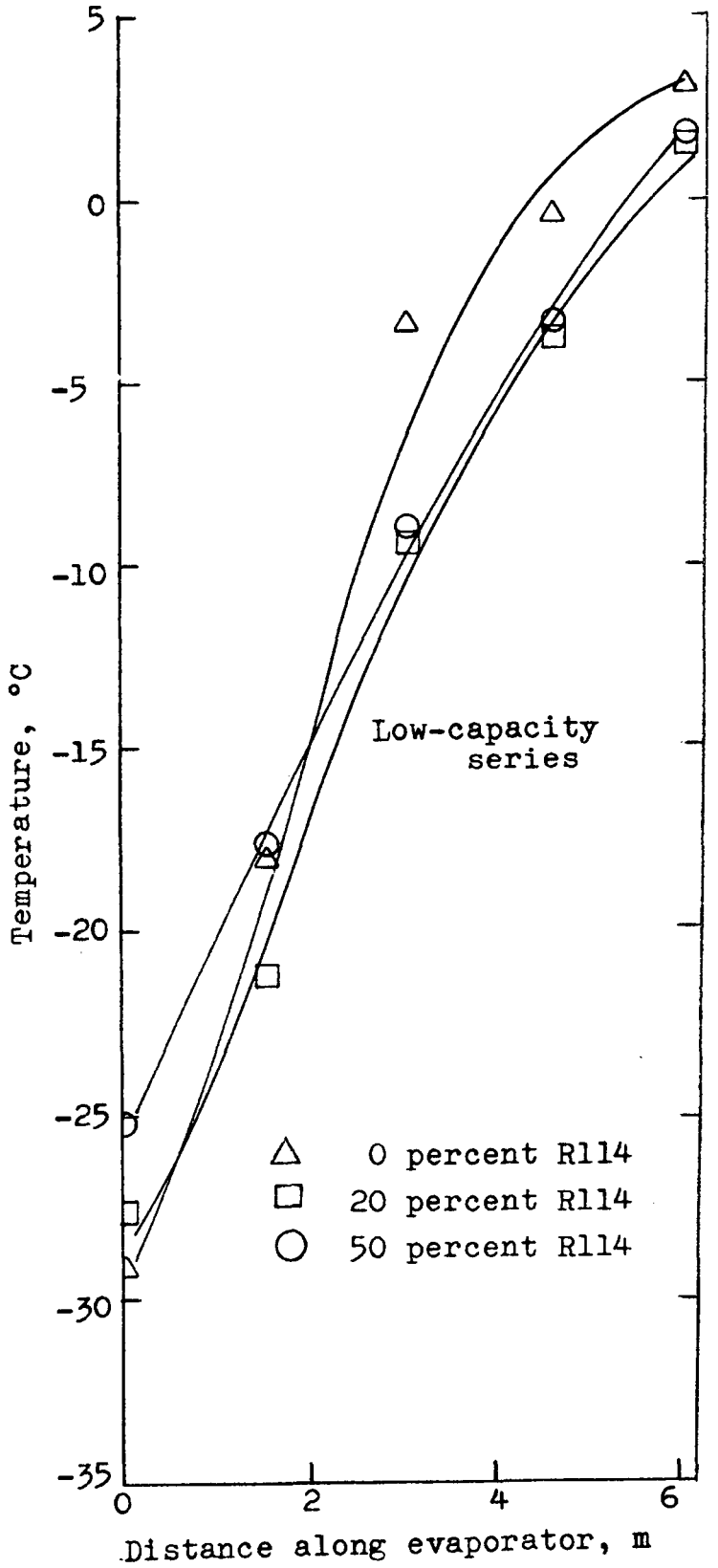

Fig. 4-6. Temperature profiles of refrigerant through high-temperature evaporator.

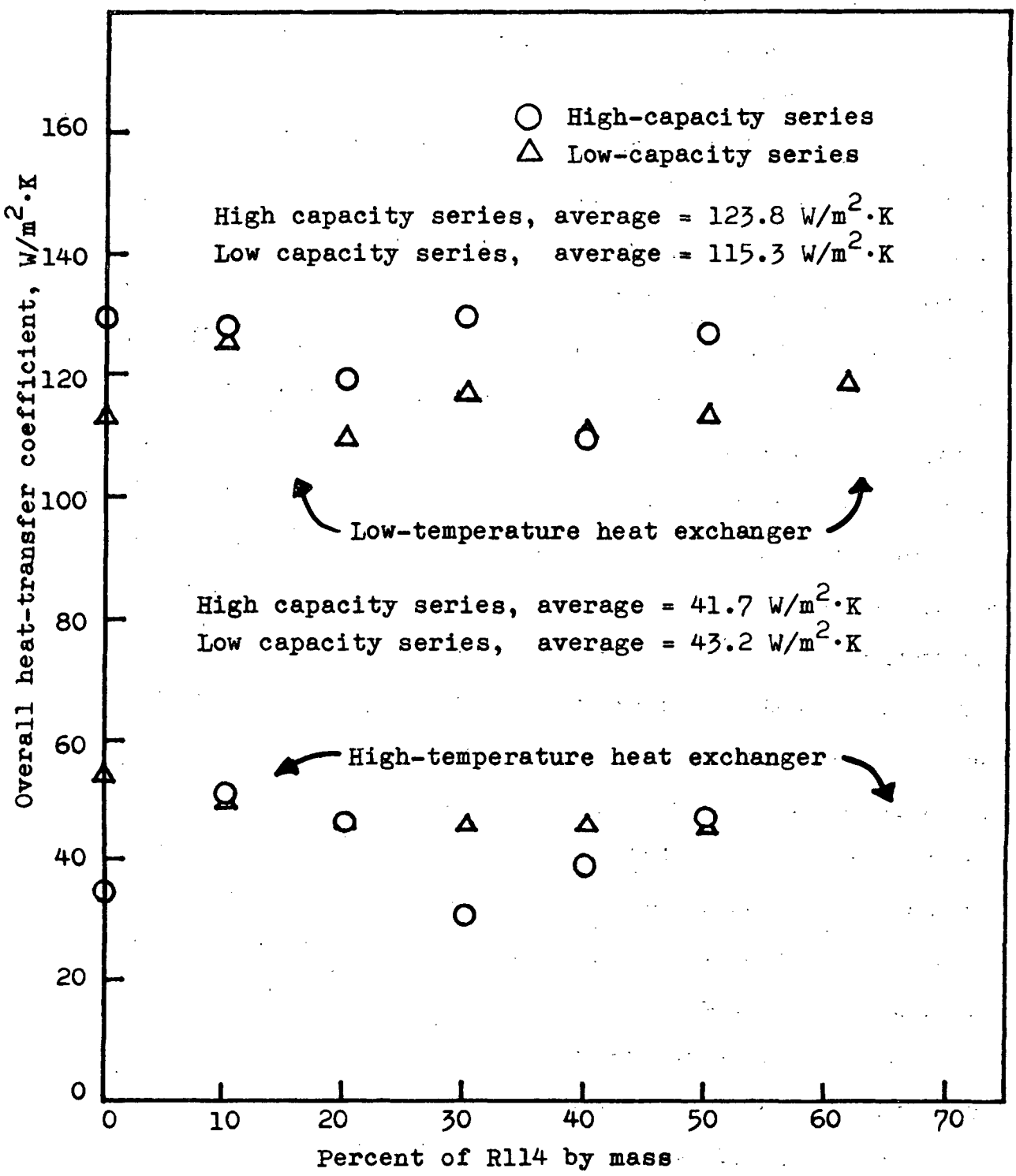

Fig. 4-7. Overall heat-transfer coefficients in the high- and low-temperature refrigerant-to-refrigerant heat exchangers.

The most consistent set of values is for the low-capacity tests with the high-temperature heat exchanger. In this series, complete superheating on the low-pressure side apparently occurs for all tests which establishes consistent operating conditions.

4-9. Error analysis. Both qualitative and quantitative statements are appropriate for the error analysis. A major objective of the project was to establish the effect of employing a mixture of refrigerants on the power requirements and on heat-transfer coefficients. The noise in the data was too great to reach definitive conclusions on the influence of concentration. A major difficulty was the inability of the compressor to pump high flow rates of the 50 percent R114 mixture which reduced the heat-transfer capacities for all tests such that extraneous influences had a greater percentage effect.

One test of the validity of thermal experiments is the agreement of heat balances which could be structured as alternate means of determining the refrigerant flow rate. The rotameter and venturi were intended to be two direct meters of the flow rate, and the evaporator and condenser heat balances provided other determinations. When forced to the low refrigerant flow rates the pressure drop across the venturi was too low to read. The average deviation of the flow rate from the condenser heat balance with the rotameter reading was 7.3 percent. The average deviation of the flow rate from an evaporator heat balance was 18 percent. The need for heavier insulation on the evaporators is emphasized.

Several thermocouples measuring refrigerant temperatures in the evaporator show inconsistent results which may be attributed to low refrigerant flow rates and the consequent stratification of temperature.

5. REDEFINITION OF THE SIMULATION MODEL

5-1. Mutual reinforcement of simultions and experiments. From the inception of the project the intent has been to iterate between simulation and experiment. A fundamental need is to develop a correct structural model for the simulation, but it is also necessary to use correct parameters in that model. Three important categories where the data from experiments presented in Chapter 4 should now be infused into the simulation program are (1) heat-transfer coefficients, (2) pressure drop of the refrigerant in the condensers and evaporators, and (3) modeling compressor power.

5-2. Heat transfer coefficients. Estimates of heat-transfer coefficients have been used in the simulation program so far and are listed on page 15. The data from Sections 4-5 and 4-6 provide guidance for improved U-values for the condenser and evaporator, respectively. The analysis of the heat-transfer data further separated the resistances so that translation of data further separated the resistances so that translation of the data would be possible to evaporators with a different fluid being cooled or condensers with air as the cooling medium rather than water.

For the refrigerant-to-refrigerant heat exchangers the overall heat-transfer coefficient of the heat exchanger could be markedly affected by whether the refrigerant on the cold side of the heat exchanger is boiling or superheating, or whether some of both of these processes is occurring.

The following U-values are proposed as updated magnitudes to use in the simulation program:

Process	U-value, based on refrigerant-side area
Evaporating	680 $W/m^2 \cdot K$, 119.7 $Btu/hr \cdot ft^2 \cdot {}^0F$
Condensing	1015 $W/m^2 \cdot K$, 178.7 $Btu/hr \cdot ft^2 \cdot {}^0F$
Desuperheating	270 $W/m^2 \cdot K$, 47.5 $Btu/hr \cdot ft^2 \cdot {}^0F$
Superheating	35 $W/m^2 \cdot K$, 6.2 $Btu/hr \cdot ft^2 \cdot {}^0F$
Subcooling	400 $W/m^2 \cdot K$, 70.4 $Btu/hr \cdot ft^2 \cdot {}^0F$

5-3. Pressure drop in evaporators and condensers. The pressure drop of refrigerant passing through the low-temperature evaporator was about 1 to 2 kPa and through the high-temperature evaporator from 2 to 4 kPa. For both R12 alone and for R12-R114 mixtures at the evaporating temperature level experienced, the saturation temperature drops approximately 1/2 °C per kPa drop in pressure. A refinement to the simulation program is to introduce the temperature change attributable to the pressure drop. Pressure drops of several kPa will not have an overwhelming influence on the performance. However, if the flow rates of refrigerant are increased to achieve greater refrigerating capacity, pressure drop should increase at approximately the square of the increase in flow rate.

Appreciable pressure drops of the order of 30 to 40 kPa were experienced in the condenser. These are higher than are necessary. A revised technique for positioning the thermocouple probes (as described for the evaporator on page 26) should bring the magnitudes of pressure drop in the condenser down to about 10 or 20 kPa. That range of pressure drops corresponds to approximately 1°C in temperature of a single condensing refrigerant such as R12.

5-4. Compressor power simulation. The one most important piece of information from both the experiments and the simulation is the magnitude of power required by the compressor. The most appropraite information needed is

6. FUTURE DIRECTIONS

6-1. Short-term and long-term plans. After completing the data gathering and analysis phases of the experimental series, some modifications suggest themselves as well as some questions that are more far-reaching. Not all of the data have the consistency originally intended, and heat balances were sometimes not possible or do not agree acceptably. The improvement of the accuracy falls into the catergory of short-term modifications. Several trends do not appear as expected, so those conditions alert us to investigate whether there are experimental difficulties or whether the expectations were incorrect. One of the most important long-term decisions is whether the R12/R114 combination of refirgerants is the best choice for the levels of temperature expected in a domestic refrigerator.

6-2. Modification of test facility. Some of the inconsistencies in data are attributable to the low refrigerant flow rates imposed because of the limited compressor capacity at high concentrations of R114. Because all tests are run at the same refrigeration capacity and glycol temperatures, the lowest refrigerant flow rates and refrigeration capacities dictate the values to be maintained for all tests. The refrigeration capacity and refrigerant flow rate required for the tests were lower than those for which the instrumentation was designed, so there is a need for either or both the following modifications: raise the refrigerant flow rate and/or replace certain instruments.

Specific modifications of the test facility that are advisable are:

1. Routine check of any thermocouple not giving a consistent reading to be sure that its placement is still satisfactory.
2. Apply heavier insulation on the evaporators.

3. Replace the existing condensers with tube sections where the refrigerant thermocouple probes introduce less pressure drop.
4. Replace the refrigerant rotameter with a smaller one so that readings are higher in its scale range.
5. Remove the venturi from the refrigerant suction line and install it in the discharge line.
6. Install rotameters in the condenser cooling water lines to provide instantaneous indications of flow rates.
7. Install refrigerant thermocouple close to the low-temperature heat exchanger.

Modification 5 is related to the long range need of increasing compressor capacity as mixture concentraions approach 50 percent. Our compressor reached operating conditions where further increase of speed did not result in increased capacity. This symptom had the earmarks of choked flow somewhere in the low-pressure circuit or in the compressor. The pressure drop over the complete venturi was estimated to be about 4 or 5 kPa which was much less than a critical pressure ratio even at the lowest suction pressures of about 50 kPa. The venturi pressure drop would increase the specific volume of suction vapor by about 10 percent which would result in the corresponding decrease in refrigeration capacity.

The suction line is a standard location for an orifice or venturi when the flow of refrigerant vapor is to be measured. The suction line location is favored over the discharge line because on the high-pressure side of the system the vapor may be at the high enough pressure to condense liquid in the pressure lines from the meter which would distort the readings of the pressure difference. If the venturi is relocated in the discharge line it would be possible to extend the pressure lines upward from the venturi and locate the gauges immediately above the venturi.

6-3. Another combination of refrigerants. It may be premture to make far-reaching decisions based on just one system or one particular compressor. There does seem to be an application problem, however, at the low temperatures need for domestic refrigerators at high concentrations of R114. The problem is that even a significant increase in compressor speed does not increase the refrigeration capacity.

In reconsidering the refrigerant combination to choose, the specific volume of saturated vapor of several refrigerants is an importnt factor. Specific volumes and saturation pressures for several refrigerants are shown in Table 6-1 at a temperature of -23°C, a typical temperature for the low-temperature evaporator. With the R12/R114 combination the specific volume

Table 6-1. Specific volumes of saturated vapor and saturation pressures of several refrigerants at -23°C.

Refrigerant	Specific volume, m^3/kg	Saturation pressure, kPa absolute
R12	0.123	132
R13	0.0153	1033
R13B1	0.0310	406
R22	0.105	215
R114	0.381	33

changes from approximately 0.12 to 0.25 m^3/kg as the concentration of R114 increases from zero to 50 percent. Combining R22 with R114 would not seem to offer a significant advantage over R12 and R114 with respect to specific volume. One of the dense refrigerants is R13 with a low specific volume of 0.0153, but R13 suffers from having a high saturation pressure (a factor during shutdown) and the fact that its critical temperature is 29°C. Combining R13B1 with R114 may have some merit, because the specific volume of a 50-percent mixture would be approximately 0.2 at -23°C and the saturation

pressure of R13B1 in combination with R114 is more moderate. A test of the refrigerant combination in comparison to 100 percent R12 would be productive.

APPENDIX A.1 PERSONNEL

Philippe Launay, graduate assistant

Paul Fuson, undergraduate assistant

Kay Heidenreich, undergraduate assistant

Perry Baker, undergraduate assistant

Dennis Long, undergraduate assistant

Gregory Cler, technician

Perry Meronyk, undergraduate assistant

Mark Schmidt, undergraduate assistant

Christopher McCarthy, graduate assistant

Christopher Head, undergraduate assistant

Sean Crosby, undergraduate assistant

Kazuya Matsuo, visiting scholar

Keith Love, undergraduate assistant

Wilbert F. Stoecker, principal investigator

APPENDIX A.2 PROPERTY EQUATIONS

1. Saturation temperatures and pressures in tables on the following pages calculated using the procedures given on pages 16-18 of the report, ORNL/Sub-78/55463/1, September 8, 1978.
2. Enthalpies and entropies used for computing the isentropic work of compression are based on equations and constants in the paper, "Refrigerant Equations," by R. C. Downing, ASHRAE Transactions, Vol. 80, Part II, pp. 158-169, 1974.

****** TABLE OF REFRIGERANT MIXTURES - R-12 AND R114 ******
****** CONDENSING AND BOILING TEMPERATURES ******
CALCULATED BY K.MATSUO SEP 10,1981
1ST LINE = CONDENSING TEMP. 2ND LINE = BOILING TEMP.

PRESS. (KPA)	WEIGHT FRACTION OF R114 0.0	0.1	0.2	0.3	0.4	0.5	0.6	0.7	0.8	0.9	1.0
10.0	-74.22	-65.22	-60.04	-56.37	-53.58	-51.34	-49.52	-47.99	-46.71	-45.63	-44.75
	-74.22	-72.23	-70.07	-67.74	-65.21	-62.47	-59.45	-56.17	-52.63	-48.80	-44.75
20.0	-62.59	-53.66	-48.30	-44.45	-41.47	-39.09	-37.12	-35.49	-34.11	-32.95	-31.99
	-62.59	-60.43	-58.08	-55.57	-52.86	-49.93	-46.78	-43.37	-39.75	-35.94	-31.99
30.0	-55.14	-46.26	-40.78	-36.82	-33.74	-31.26	-29.22	-27.51	-26.07	-24.85	-23.84
	-55.14	-52.85	-50.41	-47.78	-44.95	-41.92	-38.67	-35.21	-31.56	-27.74	-23.84
40.0	-49.53	-40.67	-35.12	-31.07	-27.92	-25.37	-23.26	-21.51	-20.02	-18.77	-17.72
	-49.53	-47.15	-44.62	-41.90	-39.00	-35.89	-32.58	-29.07	-25.39	-21.58	-17.72
50.0	-44.97	-36.14	-30.53	-26.42	-23.20	-20.60	-18.44	-16.64	-15.12	-13.84	-12.76
	-44.97	-42.53	-39.92	-37.14	-34.17	-31.00	-27.64	-24.10	-20.40	-16.60	-12.76
60.0	-41.11	-32.29	-26.64	-22.47	-19.21	-16.56	-14.36	-12.53	-10.97	-9.67	-8.56
	-41.11	-38.61	-35.94	-33.10	-30.07	-26.85	-23.45	-19.88	-16.17	-12.38	-8.56
70.0	-37.74	-28.94	-23.24	-19.03	-15.72	-13.04	-10.81	-8.94	-7.36	-6.03	-4.91
	-37.74	-35.19	-32.47	-29.58	-26.50	-23.25	-19.81	-16.22	-12.50	-8.70	-4.91
80.0	-34.74	-25.95	-20.22	-15.97	-12.63	-9.91	-7.65	-5.75	-4.15	-2.80	-1.66
	-34.74	-32.14	-29.38	-26.44	-23.33	-20.04	-16.57	-12.96	-9.23	-5.43	-1.66
90.0	-32.03	-23.26	-17.50	-13.21	-9.83	-7.08	-4.80	-2.88	-1.25	.12	1.27
	-32.03	-29.39	-26.59	-23.61	-20.46	-17.14	-13.65	-10.02	-6.27	-2.49	1.27
100.0	-29.55	-20.79	-15.00	-10.69	-7.28	-4.50	-2.19	-.25	1.39	2.78	3.95
	-29.55	-26.88	-24.03	-21.03	-17.84	-14.49	-10.98	-7.33	-3.58	.20	3.95
125.0	-24.13	-15.40	-9.56	-5.17	-1.70	1.14	3.50	5.49	7.17	8.60	9.80
	-24.13	-21.38	-18.46	-15.37	-12.12	-8.71	-5.14	-1.46	2.30	6.08	9.79
150.0	-19.52	-10.81	-4.92	-.49	3.04	5.93	8.33	10.36	12.08	13.53	14.76
	-19.52	-16.70	-13.72	-10.56	-7.25	-3.79	-.19	3.52	7.29	11.06	14.76
175.0	-15.49	-6.80	-.87	3.61	7.18	10.11	12.55	14.62	16.36	17.84	19.09
	-15.49	-12.61	-9.57	-6.36	-3.00	.50	4.14	7.87	11.65	15.42	19.09
200.0	-11.89	-3.22	2.74	7.26	10.87	13.84	16.32	18.41	20.18	21.68	22.95
	-11.89	-8.96	-5.87	-2.62	.79	4.33	8.00	11.75	15.53	19.29	22.95
225.0	-8.64	.03	6.01	10.57	14.21	17.21	19.72	21.84	23.63	25.16	26.44
	-8.64	-5.65	-2.52	.78	4.22	7.80	11.49	15.25	19.04	22.80	26.44
250.0	-5.65	3.00	9.01	13.60	17.27	20.30	22.83	24.97	26.79	28.33	29.64
	-5.65	-2.63	.55	3.88	7.36	10.97	14.68	18.46	22.25	26.01	29.63
275.0	-2.89	5.74	11.77	16.39	20.10	23.15	25.71	27.87	29.71	31.27	32.58
	-2.89	.17	3.39	6.75	10.26	13.89	17.62	21.42	25.22	28.97	32.58
300.0	-.33	8.30	14.35	19.00	22.73	25.80	28.38	30.57	32.42	34.00	35.32
	-.33	2.77	6.03	9.42	12.96	16.62	20.36	24.17	27.97	31.72	35.32

1

PRESS. (KPA)	WEIGHT FRACTION OF R114 0.0	0.1	0.2	0.3	0.4	0.5	0.6	0.7	0.8	0.9	1.0
325.0	2.08	10.70	16.76	21.43	25.19	28.29	30.89	33.09	34.96	36.55	37.89
	2.08	5.21	8.50	11.93	15.49	19.17	22.93	26.75	30.56	34.30	37.89
350.0	4.34	12.95	19.04	23.73	27.50	30.62	33.24	35.46	37.35	38.95	40.30
	4.34	7.51	10.83	14.28	17.87	21.57	25.35	29.17	32.98	36.72	40.30
375.0	6.49	15.08	21.19	25.89	29.69	32.83	35.47	37.71	39.61	41.22	42.59
	6.49	9.68	13.03	16.51	20.12	23.83	27.63	31.46	35.28	39.01	42.59
400.0	8.52	17.11	23.22	27.95	31.77	34.93	37.58	39.83	41.75	43.37	44.75
	8.52	11.75	15.12	18.62	22.25	25.99	29.80	33.63	37.45	41.18	44.75
425.0	10.46	19.04	25.17	29.91	33.75	36.93	39.60	41.86	43.79	45.42	46.81
	10.46	13.71	17.11	20.64	24.29	28.04	31.86	35.70	39.52	43.25	46.81
450.0	12.31	20.88	27.02	31.79	35.64	38.83	41.52	43.80	45.73	47.38	48.78
	12.31	15.59	19.01	22.56	26.23	30.00	33.83	37.68	41.50	45.22	48.78
475.0	14.09	22.65	28.80	33.58	37.45	40.66	43.36	45.65	47.60	49.26	50.66
	14.09	17.39	20.83	24.40	28.09	31.87	35.71	39.57	43.39	47.11	50.66
500.0	15.79	24.35	30.51	35.30	39.19	42.41	45.12	47.43	49.39	51.06	52.47
	15.79	19.12	22.58	26.17	29.87	33.67	37.52	41.39	45.21	48.93	52.47
525.0	17.43	25.98	32.15	36.96	40.86	44.10	46.82	49.14	51.11	52.78	54.20
	17.43	20.78	24.26	27.87	31.59	35.40	39.26	43.13	46.96	50.67	54.20
550.0	19.01	27.55	33.74	38.56	42.47	45.72	48.46	50.78	52.77	54.45	55.88
	19.01	22.38	25.88	29.51	33.25	37.07	40.94	44.81	48.64	52.35	55.88
575.0	20.54	29.07	35.26	40.10	44.02	47.29	50.04	52.37	54.37	56.06	57.49
	20.54	23.93	27.45	31.09	34.85	38.68	42.56	46.44	50.27	53.97	57.49
600.0	22.02	30.54	36.74	41.59	45.53	48.80	51.57	53.91	55.91	57.61	59.06
	22.02	25.42	28.96	32.63	36.39	40.24	44.12	48.01	51.84	55.54	59.06
625.0	23.45	31.97	38.18	43.03	46.98	50.27	53.04	55.40	57.41	59.12	60.57
	23.45	26.87	30.43	34.11	37.89	41.74	45.64	49.53	53.35	57.06	60.57
650.0	24.83	33.35	39.56	44.43	48.40	51.69	54.48	56.84	58.86	60.58	62.03
	24.83	28.28	31.85	35.55	39.34	43.20	47.11	51.00	54.83	58.53	62.03
675.0	26.18	34.69	40.91	45.79	49.77	53.08	55.87	58.24	60.27	62.00	63.46
	26.18	29.64	33.23	36.94	40.75	44.62	48.53	52.43	56.26	59.96	63.46
700.0	27.49	35.99	42.22	47.11	51.10	54.42	57.22	59.61	61.64	63.37	64.84
	27.49	30.97	34.58	38.30	42.12	46.00	49.92	53.82	57.65	61.35	64.84
725.0	28.77	37.26	43.50	48.40	52.40	55.73	58.54	60.93	62.97	64.71	66.18
	28.77	32.26	35.88	39.62	43.45	47.34	51.27	55.17	59.00	62.69	66.18
750.0	30.01	38.50	44.74	49.65	53.66	57.00	59.82	62.22	64.27	66.01	67.49
	30.01	33.52	37.16	40.91	44.75	48.65	52.58	56.49	60.32	64.01	67.49
775.0	31.22	39.71	45.95	50.87	54.89	58.24	61.07	63.48	65.53	67.28	68.77
	31.22	34.75	38.40	42.16	46.01	49.92	53.86	57.77	61.60	65.29	68.77
800.0	32.40	40.88	47.14	52.07	56.09	59.45	62.29	64.70	66.77	68.52	70.01
	32.40	35.94	39.61	43.38	47.24	51.17	55.11	59.02	62.85	66.54	70.01

1

4H/2