IMPROVING THE ENERGY EFFECTIVENESS OF DOMESTIC REFRIGERATORS BY THE APPLICATION OF REFRIGERANT MIXTURES*

CONF-830568--1

DE83 012598

W. F. Stoecker
University of Illinois at Urbana-Champaign
Urbana, IL 61801

Prepared under Subcontract No. 7762 X01 for the
Energy Division
Oak Ridge National Laboratory
Oak Ridge, Tennessee 37830

For presentation to the
International Technical Appliance Conference
Purdue University
W. Lafayette, Indiana

May 17-18, 1983

By acceptance of this article, the publisher or recipient acknowledges the U.S. Government's right to retain a nonexclusive, royalty-free license in and to any copyright covering the article.

IMPROVING THE ENERGY EFFECTIVENESS OF DOMESTIC REFRIGERATORS BY THE APPLICATION OF REFRIGERANT MIXTURES*

W. F. Stoecker
University of Illinois
Urbana, ILL 61801

Abstract

A critical review of U.S. and foreign literature on the use of a mixture of refrigerants rather than a single one in a refrigeration unit indicates that energy can be conserved in properly arranged systems. An independent analytical study performed under the current contract using 50 percent mixture of R-12 and R-114 in a two-evaporator refrigerator typical of domestic refrigerators showed an energy savings of 12 percent.

By acceptance of this article, the publisher or recipient acknowledges the U.S. Government's right to retain a nonexclusive, royalty-free license in and to any copyright covering the article.

*Research sponsored by the Office of Building Energy Research and Development, U.S. Department of Energy, under contract W-7405-eng-26 with the Union Carbide Corporation.

IMPROVING THE ENERGY EFFECTIVENESS OF DOMESTIC REFRIGERATORS BY THE APPLICATION OF REFRIGERANT MIXTURES

by

W. F. Stoecker
Professor of Mechanical Engineering
University of Illinois at Urbana-Champaign
Urbana, IL 61801

The energy-conserving potential of refrigerant mixtures

A refrigeration system employing refrigerant mixtures experiences sliding temperatures in the evaporator and condenser. These sliding temperatures provide the means of conserving energy in certain applications.

A temperature-concentration diagram of an ideal binary solution at a given pressure has the characteristics shown in Fig. 1a. The three regions defined by the curves are superheated vapor, mixture of liquid and vapor, and subcooled liquid. The line separating the mixture region from the superheated vapor region is the saturated vapor line, and the saturated liquid line separates the mixture and subcooled liquid regions. In the equlibrium conditions represented in Fig. 1b, the vapor is saturated vapor and the liquid is saturated liquid. Both substances A and B exist in both the vapor and liquid, but at different concentrations. If the temperature is t_1, the concentration of A and B in the liquid is indicated by point M and the concentration in the vapor is indicated by point N.

When a single substance boils at constant pressure, the temperature remains constant, but when a binary mixture boils at constant pressure the temperature changes. If a binary refrigerant mixture in the subcooled state enters a tube that is being heated, as in Fig. 2, the progression of states is shown on the t-x diagram in Fig. 3. A major difference in the behavior of the refrigerant mixture in the boiling process compared to the single refrigerant

is that the temperature increases in the vaporization portion of the process as well as during the warming of the subcooled liquid and in the superheating of the vapor.

If a mixture of refrigerants having a concentration of component A of x_A^* is employed in a refrigeration system, as shown schematically in Fig. 4, the statepoints can be shown on the t-x diagram of Fig. 5. There are two pressure levels prevailing in the system--the high-pressure level from the compressor discharge to the expansion device inlet, and the low-pressure level from the expansion device outlet to the compressor inlet. In the cycle of Figs. 4 and 5, it is assumed that refrigerant leaves the condenser, point 3, as saturated liquid, and leaves the evaporator, point 1, as saturated vapor. Point 4 entering the evaporator will be a mixture of liquid and vapor, and point 2 leaving the compressor will be superheated vapor.

A comparison of evaporating and condensing refrigerant temperatures may be made between the mixed-refrigerant cycle of Figs. 4 and 5 with a single-refrigerant cycle. If the leaving temperature of the chilled fluid is t_b, as shown in Fig. 4, a single refrigerant must be at a temperature lower than t_b throughout the evaporator, while with the mixed refrigerant only t_4 need be lower than t_b, so long as t_1 is below the entering chilled fluid temperature t_a and the refrigerant all through the evaporator is at a lower temperature than the temperature of the chilled fluid opposite to the refrigerant in the evaporator. Correspondingly, the temperature of the single condensing refrigerant must be higher than the outlet condenser cooling fluid temperature t_d. With a refrigerant mixture, t_2 must be higher than t_d, t_3 higher than t_c, and the condensing refrigerant must be at a higher temperature along the condenser than the adjacent cooling fluid.

The rough matching of the sliding temperatures of the refrigerants with the fluid being cooled or the condenser cooling fluid permits some of the refrigeration to be performed with a higher evaporating temperature and/or a lower condensing temperature than would be possible with a single refrigerant. Thermodynamically this relaxation of the temperature restrictions is the reason for an improved coefficient of performance of the system using a refrigerant mixture.

Several requirements for the mixed-refrigerant cycle to achieve improvements are immediately apparent: The temperatures of fluids cooling the condenser and being cooled in the evaporator must change through their corresponding components, and counterflow heat exchange must be achieved between these fluids and the refrigerant.

Research in the application of refrigerant mixtures

Most of the commercial systems utilizing a refrigerant mixture are applied in the chemical and process industries, such as in liquefied natural gas plants. Centers of research whose efforts have been directed toward the potential application of appliances, such as domestic refrigerators/freezers have been particularly active in the Soviet Union, East Germany, West Germany, and India. Tschaikovsky's 1963 research [Ref. 1] which he continued to pursue was influential in stimulating the recent wave of interest in the application of refrigerant mixtures. Lorenz and Meutzner[2] studied the two-evaporator domestic refrigerator/freezer and reported power savings as high as 20 percent with a 50/50 mixture of R-22/R-11 in comparison to pure R-12.

Two-evaporator refrigerator

The thinking behind the interest in exploring refrigerant mixtures for a two-evaporator refrigerator/freezer is that the two levels of evaporation provide an approximate duplication of the sliding temperature of the fluid being chilled which is the situation where refrigerant mixtures have potential benefit. If, as in Fig. 6, air is cooled in two evaporators, the changing boiling temperature of a refrigerant mixture could accommodate the two different temperature levels and could perform the high-temperature refrigeration with a higher evaporating temperature. Many refrigerator/freezers now pass some of the cold air from the freezer compartment to the refrigerator compartment thus using the low evaporating temperature to perform all of the refrigeration.

Simulation studies

A study to compare the performance of the refrigeration system using a single refrigerant with one using a mixture, both experimentally and analytically, is not straightforward. For example, to compare the power requirement of a single-refrigerant system where the evaporating temperature is uniform at t_1 (in Fig. 6) with the mixed-refrigerant system of Fig. 6 is not fair, because the mixed refrigerant system will demand a greater heat-transfer area due to the reduction in mean temperature difference between the air and the refrigerant.

Even experimental studies where a series of tests on a given system are run first with a single refrigerant, then with progressively higher percentages of a second refrigerant, can be misleading. The reason is that the second refrigerant has either a greater or a lesser density than the original refrigerant. If the system has a constant-displacement compressor

and the temperature levels of the fluid being chilled remain constant, the addition of a denser refrigerant is likely to increase the capacity and require greater temperature differences in the evaporator and condenser which decreases the coefficient of performance (COP) of the cycle. If the second refrigerant is less dense than the original refrigerant, the capacity is likely to decrease but the COP increases. Adjusting the displacement rate of the compressor for each different refrigerant mixture to maintain a constant capacity is necessary to eliminate the capacity influences on the COP.

A further complication in comparing a single- with a mixed-refrigerant cycle is that refrigerant-to-refrigerant heat exchangers aid the mixed-refrigerant cycle and have little or no influence on the COP of the single refrigerant cycle. Developing reliable simulation models of the system will also facilitate design and possible optimization of commercial applications, because the cost must be estimated of numerous configurations and distributions of heat-transfer area.

Choice of refrigerant mixtures

In order to compute specific magnitudes in the simulations, a certain combination of refrigerants had to be chosen. That choice in this study was R-12/R-114. This combination is not claimed as the best mixture, but it may be a good choice. The following reasoning influenced the temporary selection of the R-12/R-114 mixture.

Refrigerant-12 is a commonly-used refrigerant in domestic refrigerators at the present time, and this refrigerant remains miscible with oil at the low temperatures experienced in this appliance. A pair of refrigerants with widely different boiling temperatures at a given pressure provides a large change in temperature (the difference between the saturated vapor and saturated liquid lines in Fig. 1a).

Two-evaporator system

A major objective of the simulation was to explore the possibility of conserving energy by using a refrigerant mixture in a domestic refrigerator where there is a need for refrigeration at two different temperature levels as shown in Fig. 6. The cycle proposed for this assignment is shown in Fig. 7. The specifications and thermal loadings of the system are:

1. Refrigeration load at low-temperature evaporator, 0.2 kW (682 Btu/hr).
2. Refrigeration load at high-temperature evaporator, 0.1 kW (341 Btu/hr).
3. Temperature of fluid being cooled by low-temperature evaporator. -20 to -25°C (-4 to -13°F).
4. Product of UA of low-temperature evaporator, 0.05 kW/K (95 Btu/hr ^{0}F).
5. Product of UA of condenser, 0.05 kW/K (95 Btu/hr ^{0}F).
6. Temperature of condenser cooling fluid, 25° to 32°C (77 to 90°F).
7. Product of UA of Heat Exchanger 1, 0.003 kW/K (5.7 Btu/hr ^{0}F).
8. Product of UA of Heat Exchanger 2, 0.003 kW/K (5.7 Btu/hr ^{0}F).
9. Saturated vapor at point 1.
10. Saturated liquid at point 3.

To simulate the system in Fig. 7 with various R-114 concentrations, 44 simultaneous equations were needed. These equations included properties of the refrigerant mixtures, performance characteristics of heat exchangers, material balances, and energy balances.

The evaporator serving the freezer transfers 0.2 kW (682 Btu/hr) from fluid that is dropping in temperature from -20°C to -25°C (-4 to -13°F). The refrigerator load at the high-temperature evaporator is 0.1 kW (341 Btu/hr),

but no UA of this evaporator nor temperature of fluid being chilled was specified. The resulting temperature of refrigerant in the high-temperature evaporator is of the order of -20°C (-4°F) which is sufficiently low for heat exchange to take place.

Table 1 shows the results of the simulation[3]. From a power requirement of 0.1113 kW (estimated) with Refrigerant 12 alone, the power requirement drops to a minimum of 0.09799 kW with a 50 percent mixture of R-114 and R-12. The reduction in power requirement is thus 12 percent. The magnitude of this potential saving is attractive, provided that the first cost of the refrigerator would not be excessively increased.

Experimental studies

The simulation studies showed from a thermodynamic standpoint that compressor power could be reduced in a two-evaporator refrigerator by the introduction of a refrigerant mixture. Our next step was to determine whether we could achieve a power reduction in laboratory tests. The system, shown schematically in Fig. 8, was constructed[4,5] incorporating a high- and low-temperature evaporator to duplicate the refrigerator configuration. The condenser was also built in two sections for possible later studies as a heat pump for water heating.

In conducting the tests in order to make a fair evaluation, it was deemed necessary at the low-temperature evaporator to maintain the same flow rate of ethylene glycol and the same entering and leaving temperatures for all refrigerant concentrations. Similarly the same flow and temperatures were maintained for the high-temperature evaporator. The entering cooling water temperatures and flow rates to the condenser were also kept constant. As the concentration of R-114 was increased, density of the suction vapor decreased;

Table 1 Simulation Results

R-114 in mixture, %	Power kW	t_1 °C	t_2 °C	t_3 °C	t_4 °C	t_5 °C	t_6 °C	t_7 °C	t_8 °C	t_9 °C
1	0.1108	-26.6	37.3	37.0	-27.0	-27.0	-26.9	-26.9	-5.4	-20.2
20	0.1020	-21.2	39.2	33.9	-27.6	-25.9	-25.4	-23.7	-4.0	-18.9
40	0.09824	-18.9	40.7	32.3	-28.4	-24.7	-23.8	-21.2	-2.6	-17.5
50	0.09779	-18.7	41.1	31.9	-28.8	-23.2	-23.2	-20.7	-2.1	-16.8
60	0.09864	-19.1	41.1	31.9	-29.1	-23.9	-23.0	-20.8	-1.8	-16.3

thus, in order to develop the same refrigeration capacity, the compressor displacement had to be increased. This was the reason for choosing a variable speed compressor. The compressor was driven by a dynamometer so the input power to the compressor could be measured.

The necessity of changing the compressor speed unfortunately also changed the efficiency of the compressor, so direct power measurements were not reliable. Instead, the refrigerant flow rate was measured and multiplied by the isentropic work of compression applicable to the given refrigerant concentration. The results of this measurement of power are shown in Fig. 9. There is some scatter of points due to variations from one test to another in the refrigerant flow rate, but it does seem that there is a slight reduction in power at low concentrations of R-114. Near 50 percent concentrations, there is no reduction in power.

Research workers studying refrigerant mixtures in the past have called attention to the lower heat-transfer coefficients of mixtures in comparisons to either component separately. Figure 10 shows some heat transfer coefficients measured during the tests. The condensing coefficients indeed drop as the concentration increases, but the boiling coefficient remains nearly constant. The boiling coefficient is much lower than would be expected commercially, and the reason is that we chose an evaporator with large tube diameters in order to minimize pressure drop and achieve the progressive rise in temperature during evaporator. Our choice of tube size appears to have been too large resulting in such low velocities that the heat transfer coefficient is also lower than normal.

Conclusions

The technical possibility exists to conserve energy in a domestic refrigerator by applying a refrigerant mixture. As in any new development, there are certain problems to be overcome. The reduced heat transfer coefficients experienced when using mixtures tend to diminish the thermodynamic advantage of the mixture. The picture that is beginning to emerge is that some different rules for optimization of the heat exchangers prevail when using mixtures in comparison to using a single refrigerant. The classical tradeoff that the designer makes between high velocities that increase the heat transfer coefficient but also increase the pressure drop is complicated further with a refrigerant mixture by the sliding temperature during the boiling and condensing processes.

ACKNOWLEGEMENTS

This research is sponsored by Oak Ridge National Laboratory through the Department of Energy, the Office of Building Energy Research and Development.

Figure Captions

IMPROVING THE ENERGY EFFECTIVENESS OF DOMESTIC REFRIGERATORS BY THE APPLICATION OF REFRIGERANT MIXTURES

by

W. F. Stoecker

Fig. 1. (a) Temperature-concentration diagram of a binary solution at constant pressure, and (b) equilibrium of liquid and vapor.

Fig. 2 Refrigerant mixture flowing through an evaporator tube. Point 1, subcooled liquid; point 2, vaporization begins, point 3, mixture of liquid and vapor; point 4, vaporization complete; and point 5, superheated vapor.

Fig. 3. Temperature-concentration diagram of boiling process corresponding to Fig. 2.

Fig. 4. Refrigeration system using a mixture of refrigerants.

Fig. 5. Temperature-concentration diagram for refrigeration system in Fig. 4.

Fig. 6. Refrigerant mixture flowing in series through a low- and a high-temperature evaporator.

Fig. 7. Two-evaporator system for a refrigerator/freezer.

Fig. 8. Experimental facility.

Fig. 9. Power requirement based on actual flow rate and isentropic compression between suction conditions and discharge pressure.

Fig. 10. Heat-transfer coefficients as a function of the concentration.

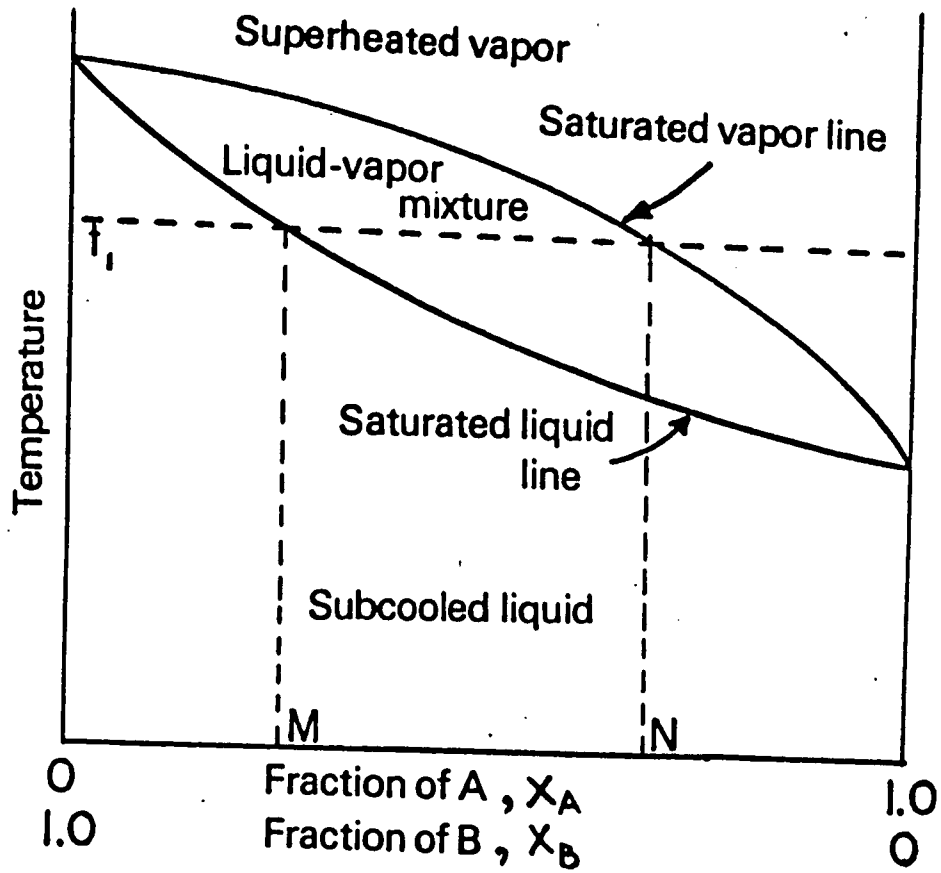
Superheated vapor
Saturated vapor line
Liquid-vapor mixture
T_1
Temperature
Saturated liquid line
Subcooled liquid
M
N
0
1.0
Fraction of A , X_A
Fraction of B , X_B
1.0
0

(a)

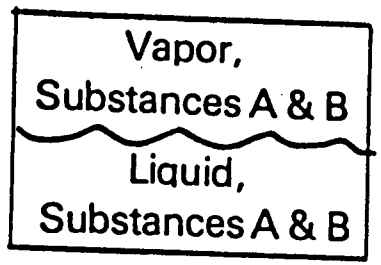
Vapor,
Substances A & B
Liquid,
Substances A & B

(b)

Fig. 1

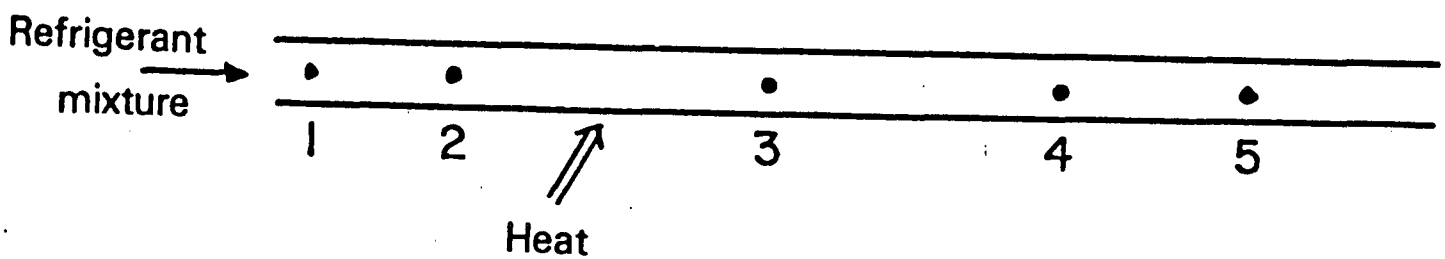

Fig 2

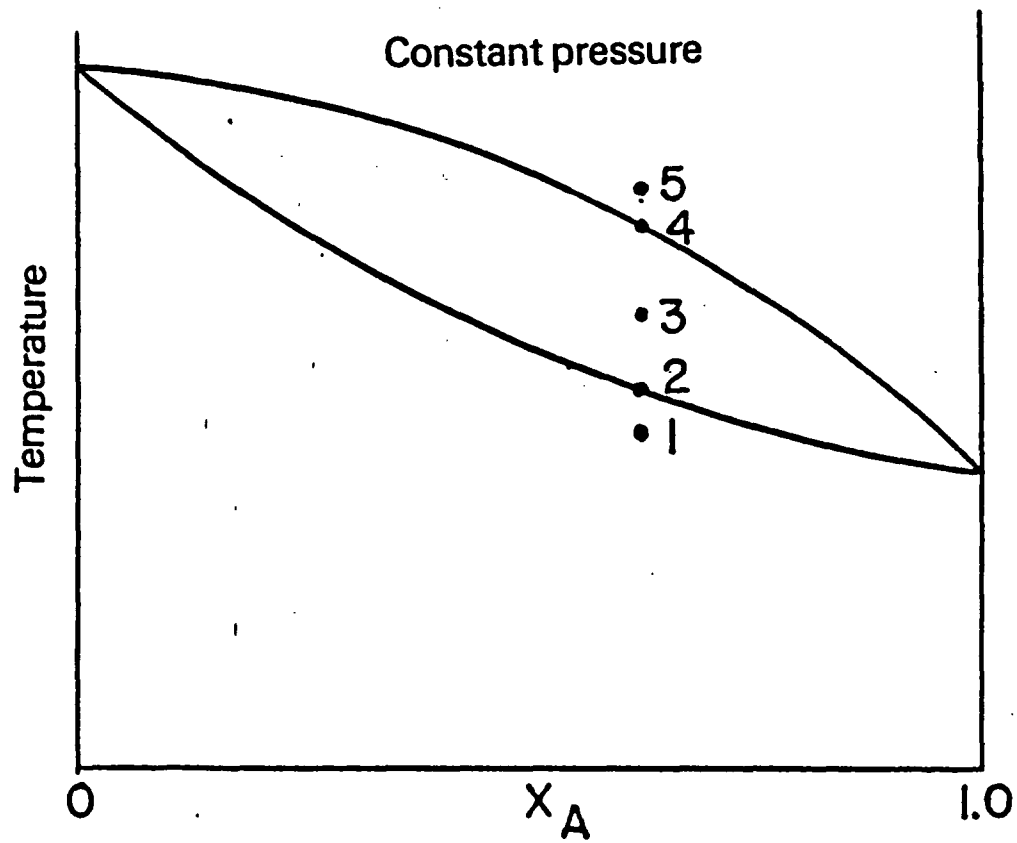

Fig 3

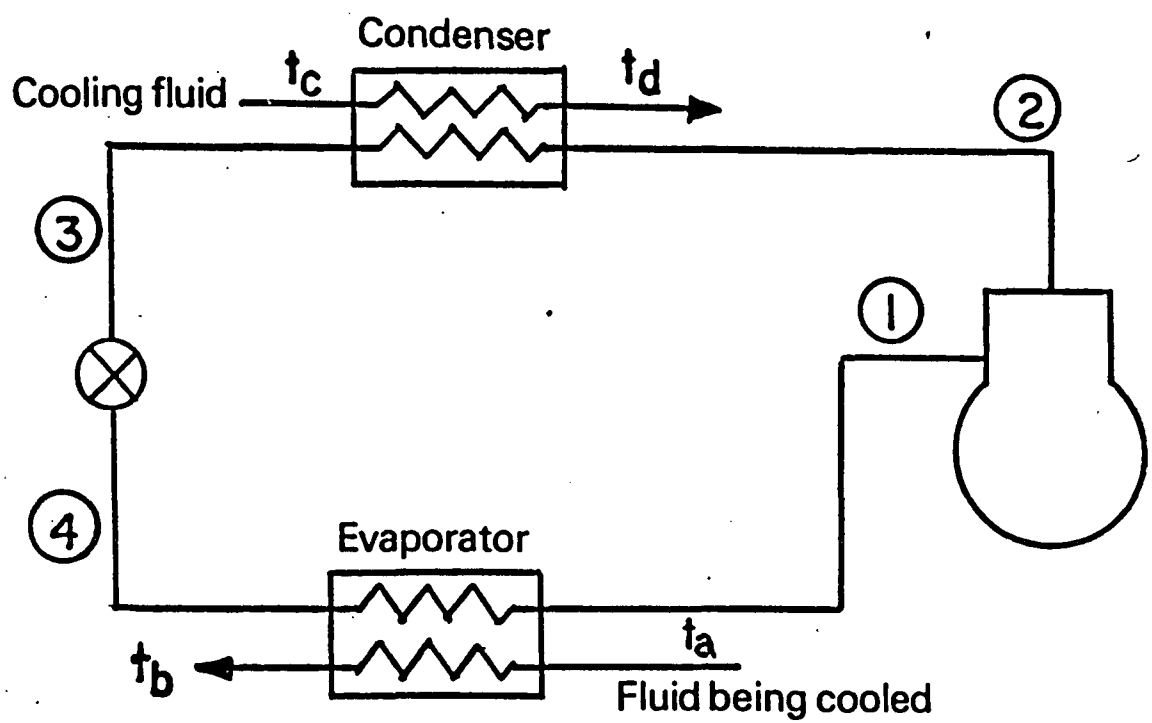
Condenser
Cooling fluid
t_c
t_d
2
3
1
4
Evaporator
t_b
t_a
Fluid being cooled

Fig 4

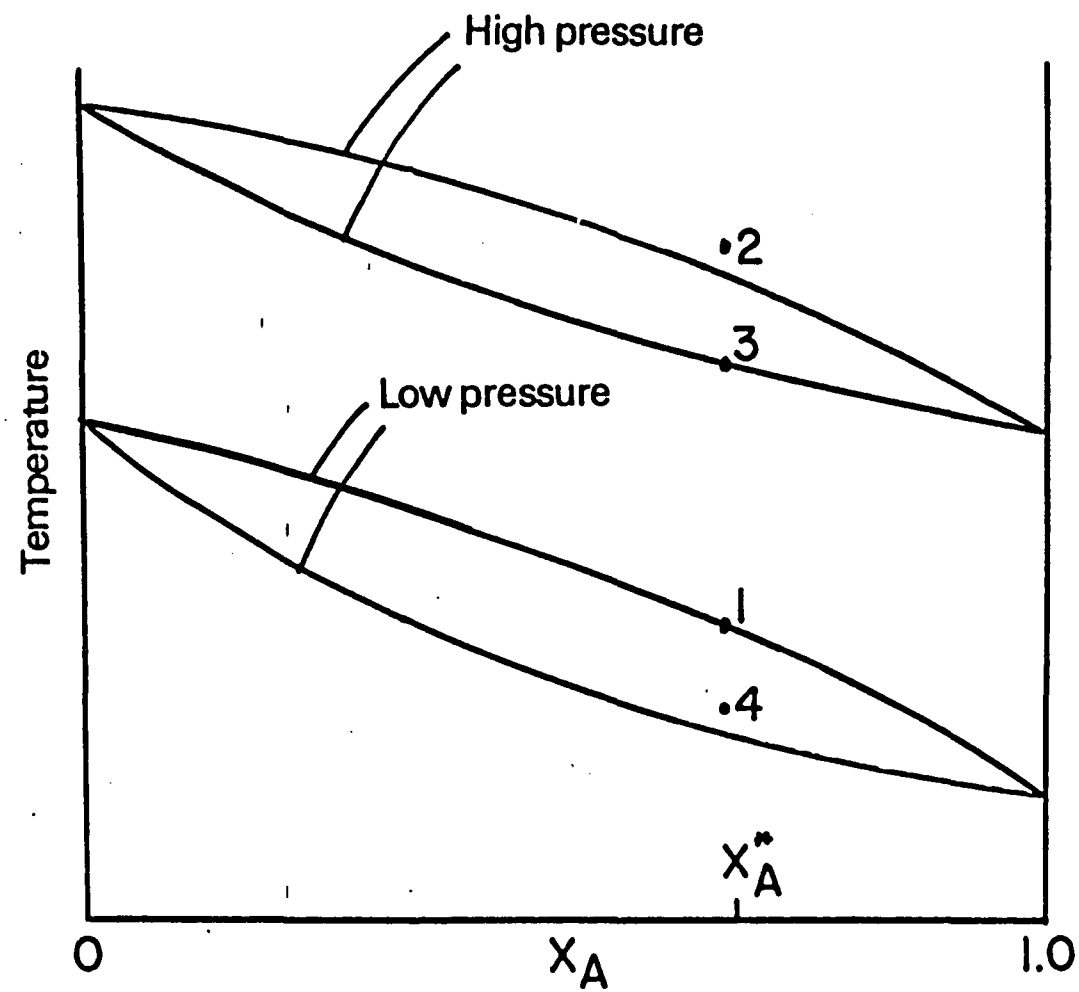

Fig 5

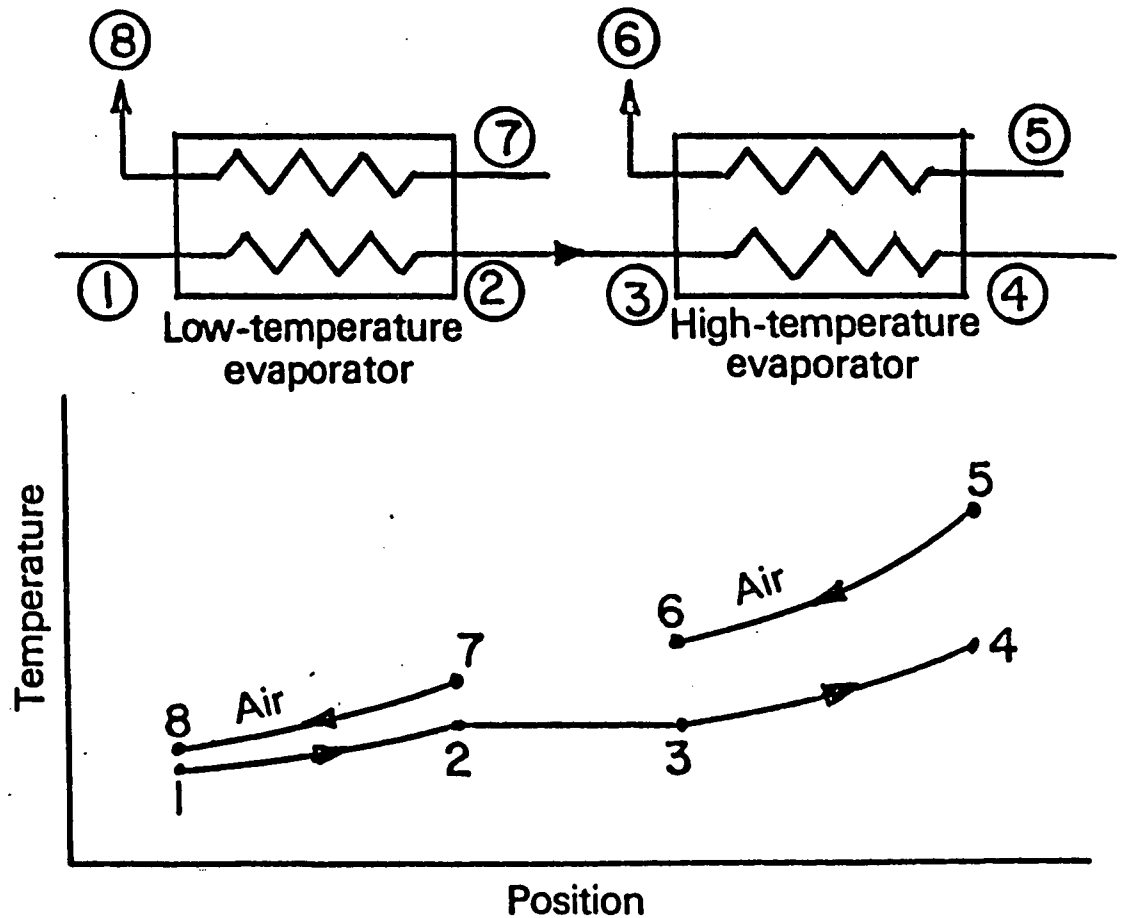
8
6
7
5
1
2
3
4
Low-temperature evaporator
High-temperature evaporator
Temperature
Position
Air
Air
5
6
7
4
8
2
3
1

Fig 6

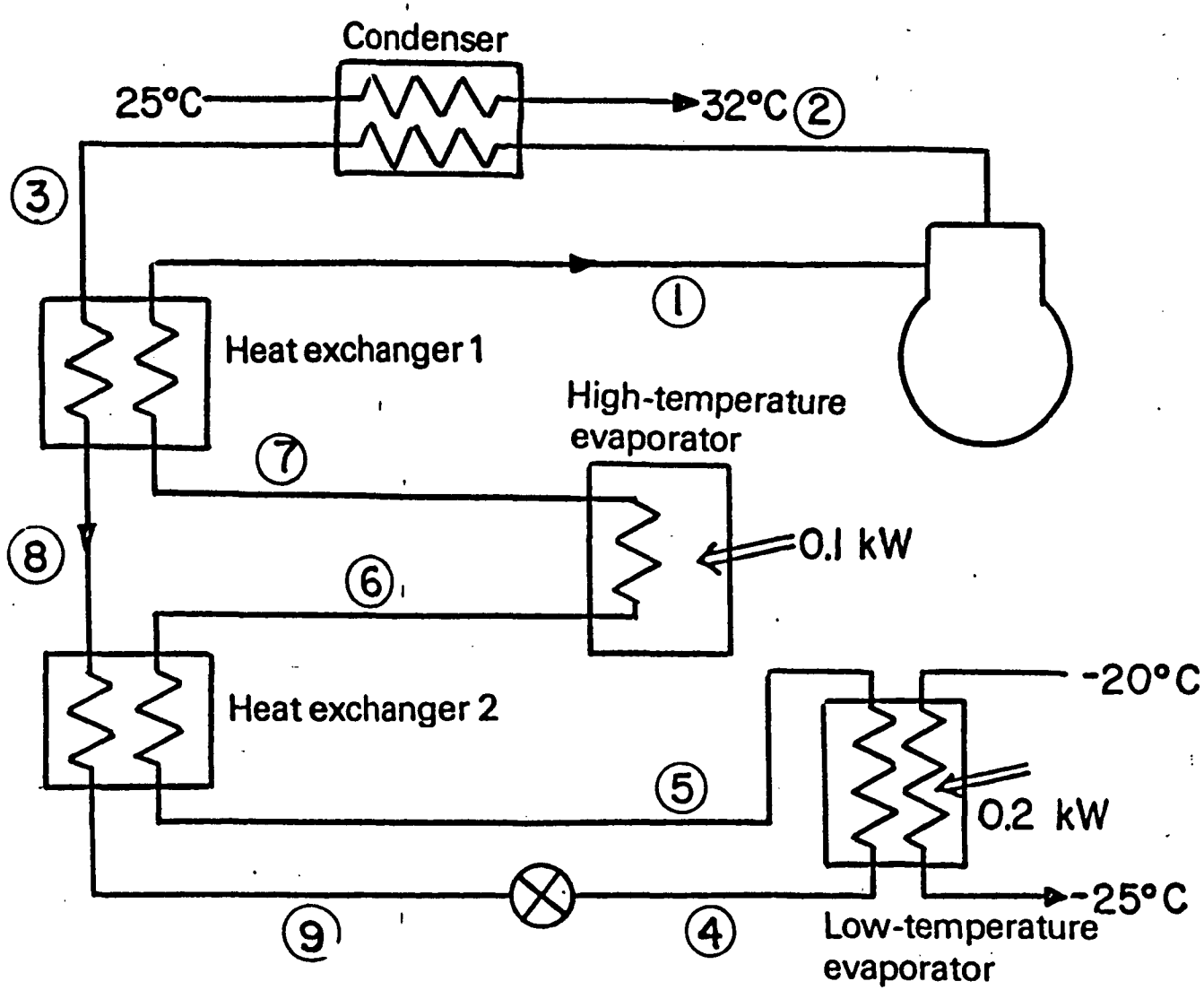
Condenser
25°C
32°C
2
3
1
Heat exchanger 1
High-temperature
evaporator
7
8
0.1 kW
6
Heat exchanger 2
-20°C
5
0.2 kW
-25°C
9
4
Low-temperature
evaporator

fig. 7

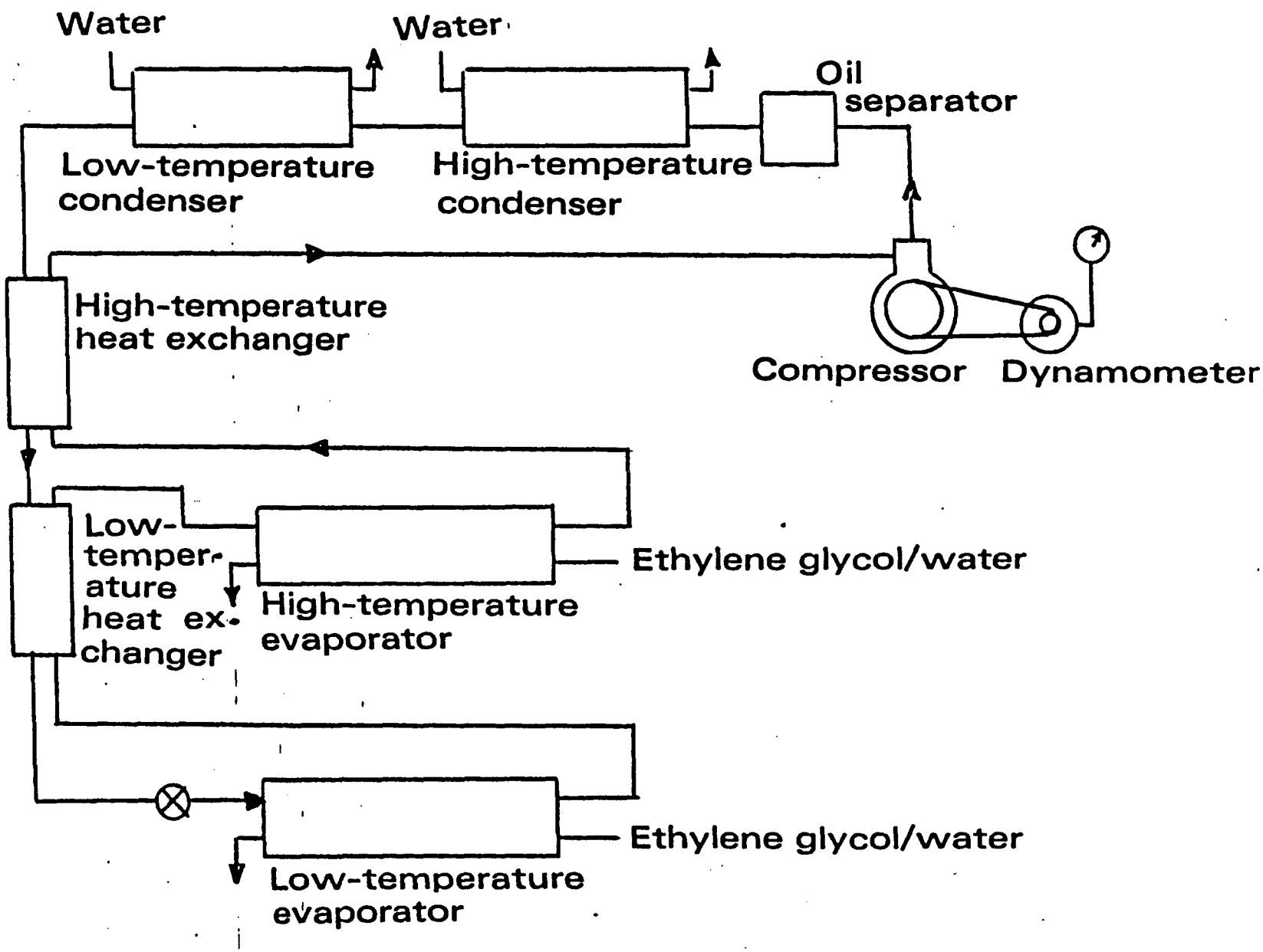
Water
Water
Oil separator
Low-temperature condenser
High-temperature condenser
High-temperature heat exchanger
Compressor
Dynamometer
Low-temperature heat exchanger
Ethylene glycol/water
High-temperature evaporator
Ethylene glycol/water
Low-temperature evaporator

Fig 8.

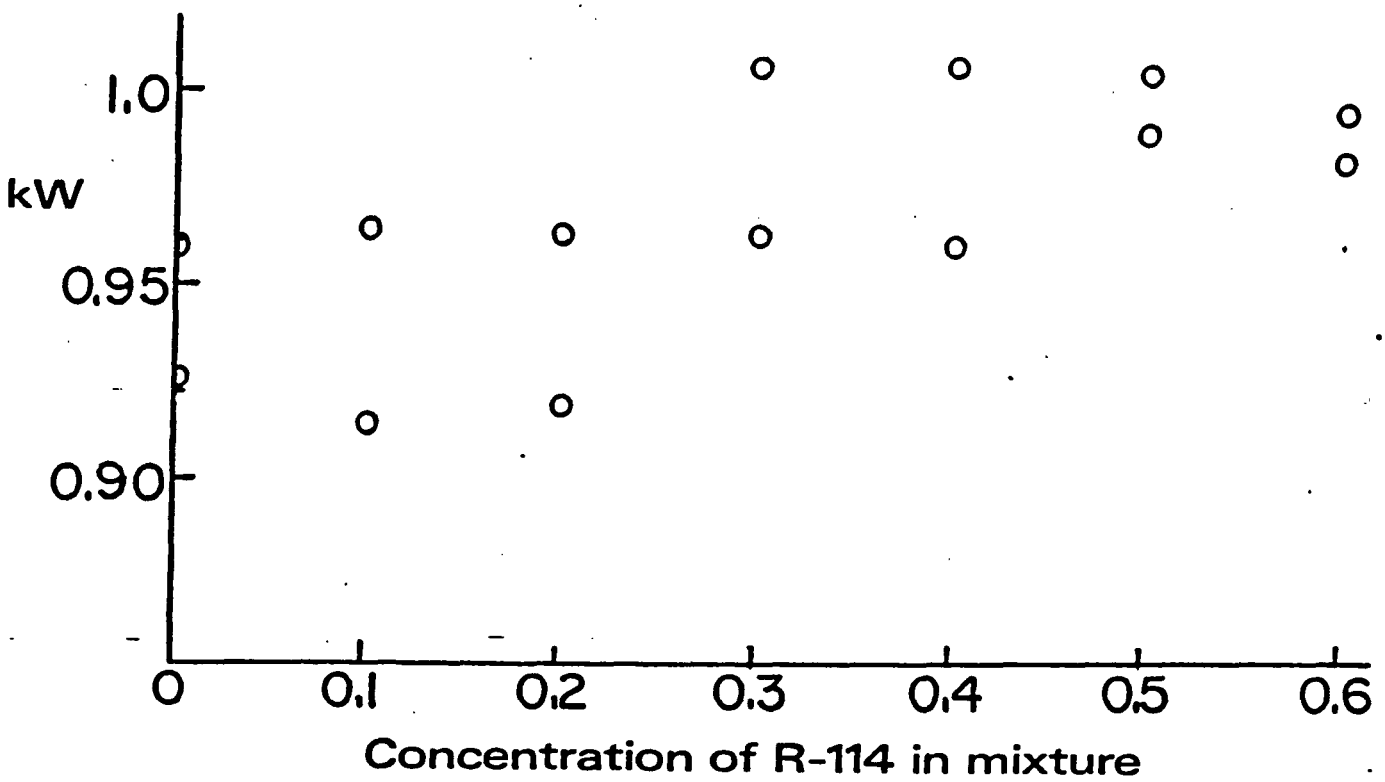
1.0
kW
0.95
0.90
0
0.1
0.2
0.3
0.4
0.5
0.6
Concentration of R-114 in mixture

Fig 9

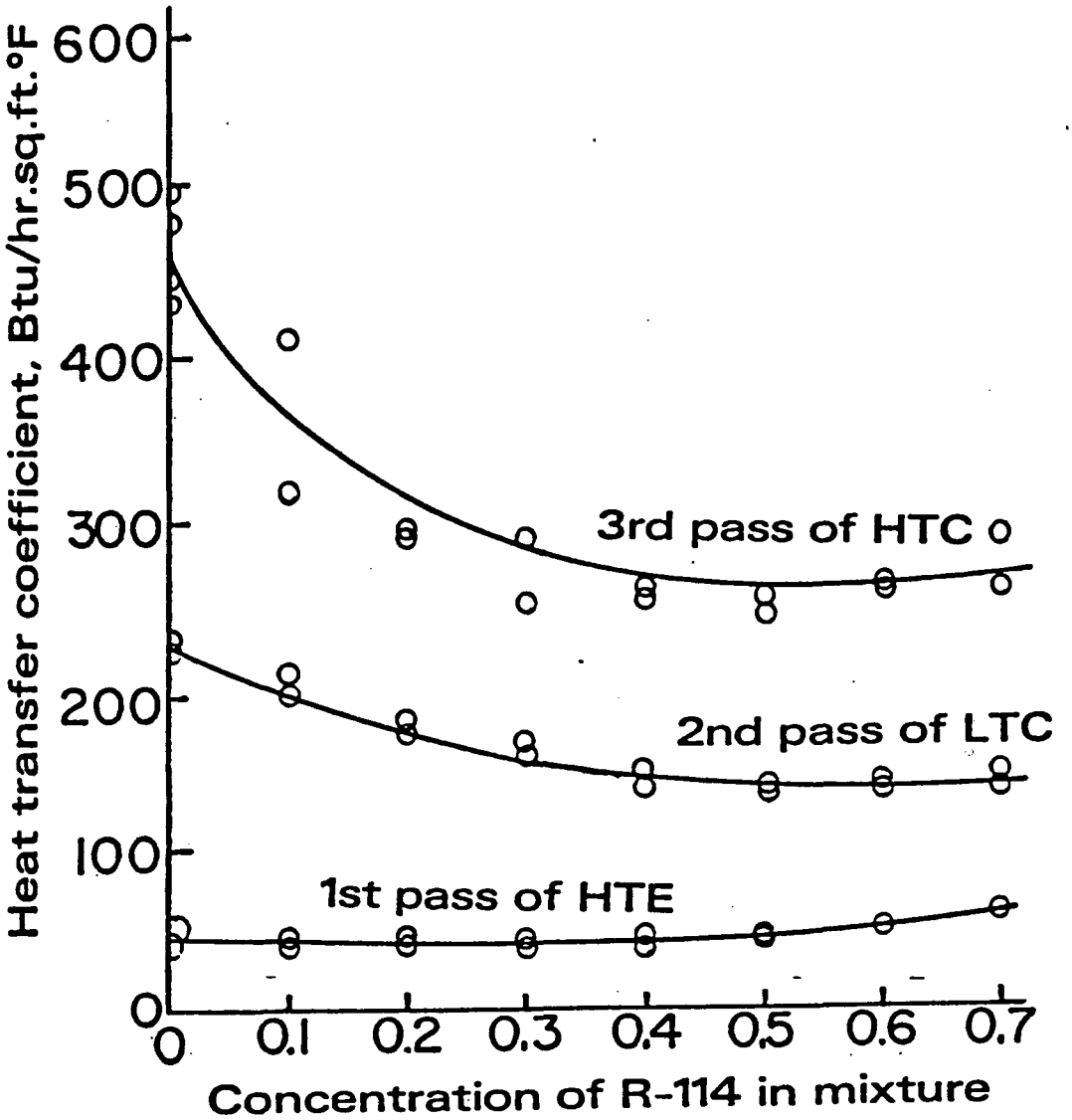
Heat transfer coefficient, Btu/hr.sq.ft.°F
600
500
400
300
200
100
0
3rd pass of HTC
2nd pass of LTC
1st pass of HTE
0
0.1
0.2
0.3
0.4
0.5
0.6
0.7
Concentration of R-114 in mixture

Fig 10

REFERENCES

1. Tschaikovsky, V. F. and A. P. Kuznetsov, Utilization of Refrigerant Mixtures in Refrigerating Compression Machines, XI International Congress of Refrigeration, Munich, 1963.

2. Lorenz, A. and K. Meutzner, On Application of Nonazeotropic Two-Component Refrigerants in Domestic Refrigerators and Home Freezers, XIV International Congress of Refrigeration, Moscow, 1975.

3. Stoecker, W. and Walukas, D., Conserving Energy in Domestic Refrigerators Through the Use of Refrigerant Mixtures, ASHRAE Trans. 87(1), p. 279-291.

4. Launay, P., Improving the Efficiency of Refrigerants and Heat Pumps by Using a Nonazeotropic Mixture of Refrigerants, ORNL/Sub-81/7762/1, October 1981.

5. McCarthy, C., Performance of Nonazeotropic Mixtures of R-12 and R-114 in a Vapor Compression Refrigeration System, M.S. Thesis, University of Illinois at Urbana-Champaign, May, 1983.