Internal Performance of a Refrigerant Mixture in a Two-Evaporator Refrigerator

W.F. Stoecker, Ph.D.
ASHRAE Fellow

ABSTRACT

When a refrigerant mixture is used as the working substance in a refrigerating system, the temperature rises during a constant-pressure boiling process and falls during a constant-pressure condensation. If the refrigeration application requires cooling a fluid through a temperature range, the match of this range with the evaporating temperatures will potentially result in an improved coefficient of performance. The cooling of air in the two-compartment domestic refrigerator can approximate the desirable cooling application.

This paper presents some experimental measurements on a two-evaporator system with a 50% mixture of R12/R114 and compares that system to the performance of a system using R12 alone. The varying temperatures of the mixture are observed, although pressure drop in the evaporators reduces the actual change in the COP in comparison to the maximum possible.

USING A MIXTURE OF REFRIGERANTS

The past five years have seen a lively interest develop in the possible application in appliances of a mixture of refrigerants rather than using a single refrigerant. The two major reasons for this interest include (1) reduction in compressor power for a given refrigeration duty, and (2) capacity modulation, even though the compressor displacement remains constant. In certain special cases other reasons appear also, such as tailoring the pressures of the refrigerant for given evaporating and condensing temperatures. The energy-conserving potential exists when the medium being cooled in the evaporator or warmed in the condenser experiences a change in temperature. If a counterflow heat exchanger is used so that temperature differences between the refrigerant and the external fluid in either or both of the heat exchangers remain approximately constant, thermodynamic analysis shows less irreversibility than when a constant-temperature refrigerant exchanges heat with the condenser cooling fluid or the fluid being chilled in the evaporator.

The other major attractiveness of a refrigerant mixture is in air-to-air heat pumps, where some means is provided to change the concentration of the mixture so that more of the dense fraction is in active circulation at low outdoor temperatures. This shift in concentration can increase the heating capacity over that available with a single refrigerant yet still does not overload the compressor motor, which is lightly loaded at that condition. Recently, some engineers have suggested capacity modulation in domestic refrigerators to improve the average daily efficiency. If the compressor would operate for longer periods of time at light loads, rather than cycling on and off, an increased evaporating temperature and a reduced condensing temperature would prevail.

SOME CHARACTERISTICS OF A REFRIGERANT MIXTURE SYSTEM

If a refrigerating system, such as the one in Figure 1, uses a mixture of refrigerants, the operating points would be as shown in Figure 2. Figure 2 shows a temperature-concentration diagram of a binary mixture at two different pressures with the shapes of curves similar to ideal mixtures. The upper pair of convex-concave lines pertains to a high pressure, such as prevails in the condenser, and the lower pair applies to a low pressure, as in the evaporator. The upper line of a pair designates saturated vapor, and the lower line refers to

saturated liquid. The region above the vapor line is superheated vapor; that below the lower line is subcooled liquid. The region enclosed by the pair represents a mixture of liquid and vapor. The fraction by mass of component A is the abscissa of Figure 2.

The statepoints throughout the cycle are as follows: Assume the system is charged with a mixture having a concentration of component A designated by X_A*. Further assume that vapor is saturated leaving the condenser at point 3. Following compression from point 1, the vapor at 2 is superheated. After passing through the expansion device at point 4, the refrigerant will be a mixture of liquid and vapor, as usually occurs in a single-refrigerant system. One of the unique features of refrigerant mixtures is that, although the pressure remains essentially constant in the evaporator, the temperature of the boiling refrigerant rises (from t_4 to t_1). Also, the temperature drops in the condenser, not only because of desuperheating from point 2 to 2a, but from t_{2a} down to t_3. This variation in temperature in a constant-pressure change of phase is a feature that offers energy-conserving possibilities when external fluids passing through the evaporator and condenser also change in temperature.

PRESSURE-ENTHALPY DIAGRAM OF A MIXTURE

A convenient tool to assist in cycle calculations of refrigerating systems is a pressure-enthalpy diagram displaying the saturated-liquid and saturated-vapor lines, as well as temperature, entropy, and specific volume lines in the superheated vapor region. Pressure-enthalpy charts can be developed for refrigerant mixtures as well, but a chart applies to only one concentration. An example (Pedersen 1982) of such a p-h diagram is shown in Figure 3 for a 50%, by mass, binary mixture of R-12 and R-114.

The first noticeable difference between Figure 3 and a p-h diagram for a single refrigerant is that lines of constant temperature in the mixture region slope downward to the right. On the chart for a single refrigerant, the lines of constant temperature in the mixture region are horizontal, and, in fact, temperatures are not indicated in the mixture region but only at saturated liquid and saturated vapor conditions. Figure 3 permits a quantification of the extent of temperature change possible in a constant-pressure condensation and evaporating process. In a condenser, suppose that condensation begins at 104 F (40°C). Moving horizontally to the left from saturated vapor at 104 F (40°C) to the saturated liquid line shows the temperature has dropped to approximately 86 F (30°C), thus the temperature changes 18°F (10°C) in the process. If evaporation of saturated liquid begins at -4 F (-20°C), the saturated vapor temperature at the same pressure reaches 14 F (-10°C), resulting again in a 18°F (10°C) change. The magnitude of this change in temperature is a function of the properties of the two constituents. In general, those substances having the greatest difference in boiling temperatures at a given pressure provide the greatest change in temperature during a constant-pressure change in phase.

Another point worth observing in Figure 3 for this R12/R114 choice of refrigerant, which is the same combination of some experimental results shown later, is that the lines of constant entropy are close to the saturated vapor line. There is little superheating in a constant entropy compression. This characteristic is probably due to properties of R-114, which show isentropic compressions starting at saturated vapor, first moving out into the superheat region and then passing into the liquid-vapor mixture region.

REFRIGERANT MIXTURE REGION

Domestic refrigerators are characterized by the need for refrigeration at two different temperature levels--for the freezer compartment and for the refrigerator compartment. Two of the concepts currently in use to achieve these two temperature levels are: (1) convey air from the freezer compartment to the refrigerator compartment, and (2) provide two evaporators and pass the refrigerant in series first through the freezer and then the refrigerator evaporator. In either concept, refrigeration is being performed at a lower temperature than needed for the refrigerator compartment. When using a single refrigerant in the two-evaporator configuration, some of the evaporation in the refrigerator compartment takes place at the same temperature as in the freezer, although it is possible to superheat the refrigerant vapor in that evaporator too.

When using a refrigerant mixture in the two-evaporator domestic refrigerator, temperature profiles like those shown in Figure 4 are possible. In this arrangement, the temperature of the refrigerant rises through each of the evaporators and comes closer to providing a constant temperature difference between air and refrigerant than would be true with a single

refrigerant. One of the early proposals to use a mixture of refrigerants was made by Tschaikovsky and Kuznetzov (1963), and 12 years later, Lorenz and Meutzner (1975) reported power savings of 20% in a domestic refrigerator when using a 50/50 mixture of R22/R11 in comparison to R12 singly.

TWO-EVAPORATOR TEST FACILITY

To test the validity of the energy-conserving potential, an analytical and experimental study was conducted on a two-evaporator system. First a simulation was performed on a system operating as in the flow diagram shown in Figure 5. The system not only possess the two evaporators but incorporates two refrigerant-to-refrigerant heat exchangers as well. While these heat exchangers are not always effective in improving the operating efficiency of systems using a single refrigerant, they are beneficial when using refrigerant mixtures (Stoecker and Walukus 1981). A specified refrigerating load of 0.2 kW was applied at the low-temperature evaporator through the chilling of a fluid from -4 F (-20°C) to -13 F (-25°C) with an applicable UA of 0.05 kW/K. The load at the high-temperature evaporator was 0.1 kW, and freedom had to be allowed for the refrigerant temperatures to seek their own levels in this evaporator in order to meet the condition of saturated vapor existing at the entrance to the compressor. The result of the simulation (Stoecker and Walukus 1981) was that a 12% saving in power could be achieved with a 50% R12/R114 mixture in comparison to using R12 alone. The simulation acknowledged that the compressor displacement rate must increase as the suction vapor became progressively less dense as the concentration of R114 increased.

Since the simulation verified the attractiveness of using mixtures, the next step was the construction and operation of a test facility shown schematically in Figure 6. The flow diagram is similar to the simulated system of Figure 5. However, the heat for the high-temperature evaporator is provided by a fluid whose entering temperature level could be controlled; the compressor is driven by a variable-speed motor so that the compressor displacement can be regulated; and the condenser is segmented into two parts for any future studies that might be desired on heat pumping. The test plan was built around conducting tests at the same refrigerating duty (rate of heat transfer and levels of temperature) as the concentration of the refrigerant mixture was varied. Separate adjustment of the temperature and flow of the fluids being chilled by the evaporators and of the compressor speed were required.

The locations of the pressure, temperature, and flow rate measurements on the system are shown in Figure 7. The overall objectives of the measurements were to determine the thermal energy rates and also pressures and temperatures within the evaporators and condensers to indicate whether the theoretical behavior was being matched in the system. In addition, operation of the system was expected to provide experience in working with refrigerant mixtures.

REFRIGERANT TEMPERATURE PROFILES IN THE EVAPORATORS AND CONDENSERS

In order to verify that the sliding temperatures actually occurred in the evaporators and condensers, the refrigerant temperatures were measured at points along these heat exchangers. Both the condensers and evaporators were configured so that the refrigerant condensed or boiled, respectively, in the inner tube of concentric heat exchangers. Cooling water passed counterflow in the annular passages of the condenser and ethylene glycol in the evaporator. The temperature profiles of both the refrigerant and the external fluids are shown in Figures 8 and 9 for the evaporator and condenser, respectively.

In the evaporator profiles shown in Figure 8, the temperature of R12 alone shows a straight line dropping slightly due to the pressure drop in the evaporator. A point is reached in the high-temperature evaporator where all the liquid has been vaporized and the remainder of the evaporator performs superheating. With the 50% solution of R12/R114, however, there is a progressive rise in the temperature of the boiling refrigerant as it passes through the low-temperature evaporator, low-temperature heat exchanger, and the high-temperature evaporator. There is also a pressure drop of the refrigerant mixture flowing through the evaporators, so it is likely that the rise of temperature would have been even greater without this pressure drop. But indeed, the sliding temperature profile prevailed for the mixture.

The profiles of the glycol temperatures were essentially identical for R12 alone and the 50% mixture. This fact is not surprising, because the tests were conducted so that the

entering and leaving temperatures and the glycol flow rate were kept uniform for the high-temperature evaporator and uniform for the low-temperature evaporator for all concentrations tested. The refrigerant temperatures positioned themselves so that the requisite rate of heat was transferred in each evaporator. Thus, the mean temperature of R12 alone in the low-temperature evaporator approximated that of the rising temperature of the 50% mixture. Similarly, in the high-temperature evaporator the combination of the constant-temperature boiling and the rapidly rising superheat temperature of the R12 alone provided about the same mean refrigerant temperature as of the mixture.

Turning to the condenser temperature profiles of Figure 9, both the R12 and the mixture entered superheated from the compressor. The temperature of the R12 dropped to its condensing temperature and then remained essentially constant until near the end of the low-temperature condenser. Near the outlet the temperature began to drop--no doubt because subcooling was taking place. Although we attempted in the tests to maintain saturated liquid at the outlet of the condenser, it was difficult in practice to precisely achieve this goal. The 50% mixture entered the condenser at a slightly lower temperature than the R12, desuperheated rapidly, then displayed its expected reduction in temperature as it condensed.

The condenser cooling water was circuited so that the leaving water from the low temperature condenser passed directly into the high-temperature condenser. The temperature of the entering condenser cooling water was maintained constant at 95 F (35°C) and the flow rate kept constant for all tests. The outlet water temperature was not controlled, but Figure 9 shows that it was the same for both concentrations, indicating that the same rate of heat rejection occurred in both cases. There was a shift in the distribution of the water temperatures through the condenser with the 50% mixture transferring less heat in the low-temperature condenser and more in the high-temperature condenser than was true of the R12 test. The explanation is that the comparative mean-temperature difference between the refrigerant and the cooling water is different. In the low-temperature condenser, the mean temperature difference between the two fluids is lower when the 50% mixture is in service.

COMPARISON OF MEASURED PRESSURE-TEMPERATURE RELATIONSHIPS WITH PROPERTY DATA

Certain combinations of refrigerants behave very closely to ideal solutions, so their properties can be calculated from property data of the individual components in combination with Raoult's and Dalton's laws. The R12/R114 mixture is one combination that is likely to behave as an ideal solution. At the pressures prevailing in the tests from which the data for Figures 8 and 9 were taken, the vapor and liquid temperatures were computed from property data and are presented in Table 1. Since the data for pure R12 are well established, the comparisons of the pressure-temperature values during condensation and evaporation are more calibration of the instrumentation than indicators of refrigerant properties. Indeed, the experiments show condensing at approximately 111 F (44°C) and evaporating starting at -7.6 F (-22°C) and ending at -9.4 F (-23°C).

Even for the refrigerant mixture, it is not suggested that the test facility is suitable to provide property correlations. However, any consistent deviations may provide information about performance of mixtures in actual systems. Figure 9 shows condensation to begin at about 120 F (49°C) and condensation is complete at about 102 F (39°C). These temperatures are about 3.6°F (2°C) lower than property data indicate. On the evaporator side, the temperature out of the expansion valve and into the low-temperature evaporator is -10.3 F (-23.5°C) and out of the high-temperature evaporator at 1.4 F (-17°C). The entering condition to the low-temperature evaporator is not saturated liquid but a mixture of liquid and vapor, so the mixture is already started on its temperature rise. The actual temperature leaving the high-temperature evaporator is about 1.8°F (1°C) lower than saturated vapor, but is is possible that some liquid still exists in the vapor at that point.

The maximum difference between saturated vapor and saturated liquid temperatures at a given pressure is 50 F (10°C) for a 50% R12/R114 mixture. In the evaporator the measured rise was 11.7 F (6.5°C). The full 18°F (10°C) drop was achieved in the condenser.

CONCLUSIONS

The use of refrigerant mixtures offers the possibility of improved efficiency if advantage can be taken of the sliding temperatures in the condenser and evaporator. The particular application suitable for energy conservation is where the fluid being chilled or the condenser cooling fluid vary over appreciable ranges of temperatures. The two-evaporator domestic

refrigerator provides the equivalent of a varying air temperature on the evaporator side. The experimental studies show that it is indeed possible to achieve the varying refrigerant temperatures.

REFERENCES

Lorenz, A.; Meutzner, K. 1975. "On application of non-azeotropic two-component refrigerants in domestic refrigerators and home freezers." XIV International Congress of Refrigeration, Commission B2, Moscow.

McCarthy, C. I.; Stoecker, W. F. 1984. "The simulation and performance of a system using an R-12/R-114 refrigerant mixture." ORNL/Sub/81-7762/3&01, Oak Ridge National Laboratory Oak Ridge, TN.

Pedersen, P. H. 1982. "Stofegenskaber for R12/R114 kolemiddelblandinger." Report F67, Refrigeration Laboratory, Technical University of Denmark, Lyngby, March.

Stoecker, W. F.; Walukas, D. J. 1981. "Conserving energy in domestic refrigerators through the use of refrigerant mixtures." ASHRAE, Vol. 87, Part 3, pp. 279-291.

Tschaikovsky, A. F.; Kuznetzov, A. P. 1963. "Investigation of mixtures of refrigerants in compression refrigeration machines." Kholod. Tech., Vol. 40, No. 1, pp. 9-11.

ACKNOWLEDGMENTS

The work reported in this paper is based on data from Project 7762-X01 sponsored by the Oak Ridge National Laboratory at the University of Illinois. The tests were conducted by C. McCarthy and K. Matsuo (McCarthy and Stoecker, 1984).

TABLE 1

Saturated Vapor and Liquid Temperatures Determined from Property Data at the Condenser and Evaporator Pressures for Tests Shown in Figures 8 and 9

Position	Refrigerant	Pressure		Saturated Liquid Temp.		Saturated Vapor Temp.	
		psia	(kPa)	F	(°C)	F	(°C)
Entering Condenser	0% R114	154.3	(1064)	111.6	(44.2)	111.6	(44.2)
	50% R114	105	(726)	106.3	(41.3)	123.6	(50.9)
Leaving Condenser	0% R114	153	(1058)	111.2	(44.0)	111.2	(44.0)
	50% R114	104	(720)	105.8	(41.0)	123.1	(50.6)
Entering low-temp. evap.	0% R114	20.6	(142)	-6.7	(-21.5)	-6.7	(-21.5)
	50% R114	12.8	(88)	-11.4	(-24.1)	7.5	(-13.6)
Leaving high-temp. evap.	0% R114	19.9	(137)	-8.3	(-22.4)	-8.3	(-22.4)
	50% R114	11.5	(79)	7.5	(-13.6)	3.0	(-16.1)

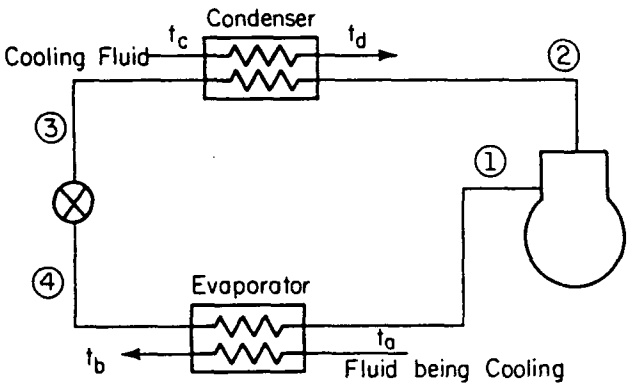

Figure 1. A refrigeration system using a mixture of refrigerants

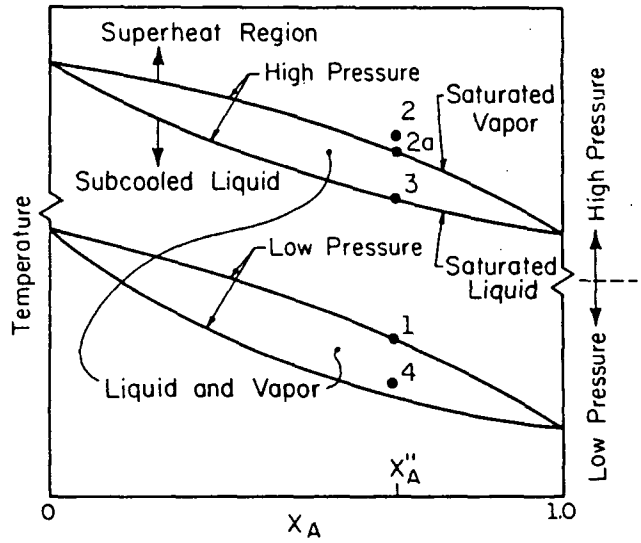

Figure 2. Temperature-concentration diagram for refrigeration system in Figure 1: process 1-2, compression; 2-3, condensing; 3-4 expansion; and 4-1 evaporating

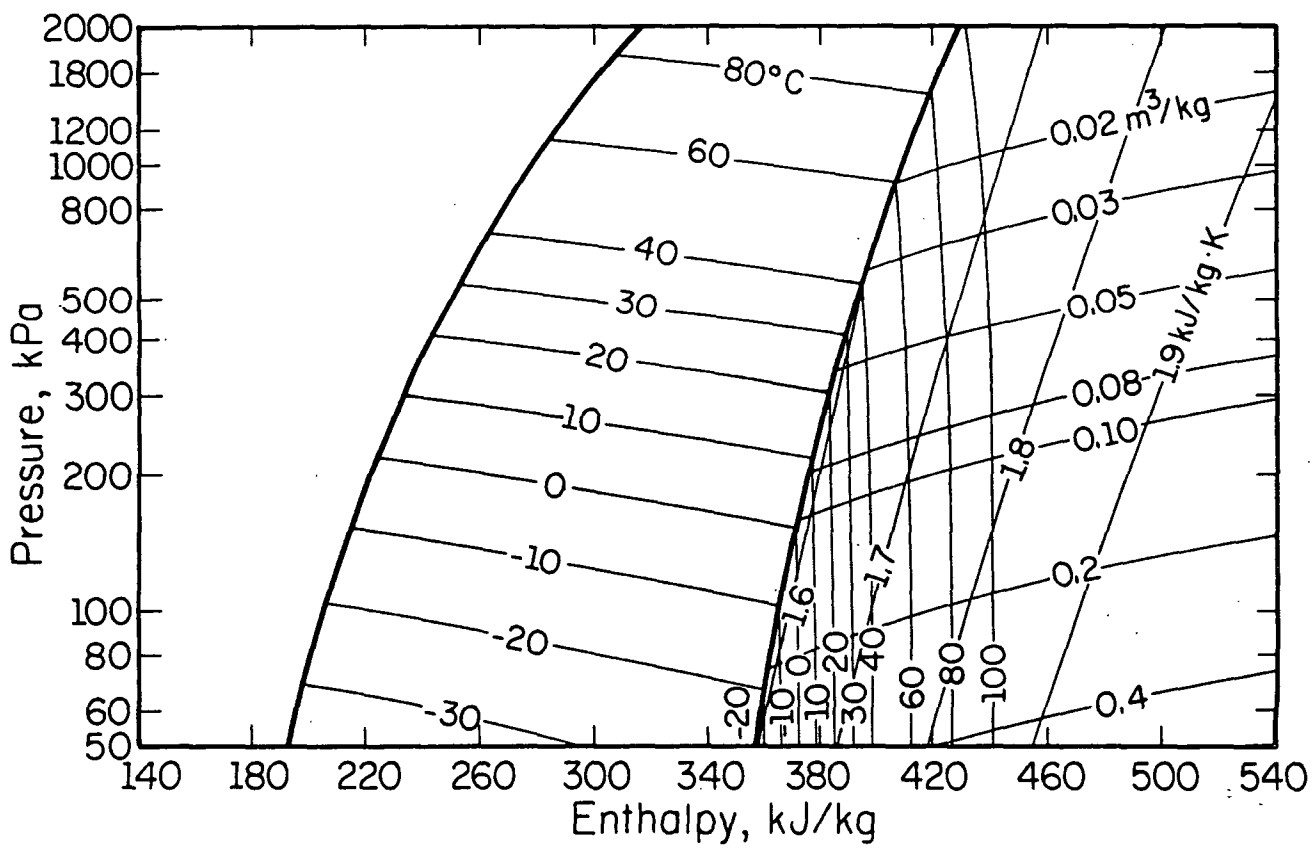

Figure 3. A pressure diagram for 50% by mass binary mixture of R-12 and R-114 (Pedersen 1982)

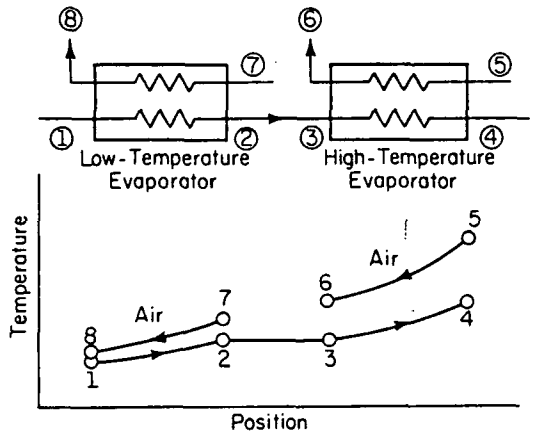

Figure 4. Refrigerant mixture flowing in series through freezer and refrigerator compartment evaporators in a domestic refrigerator

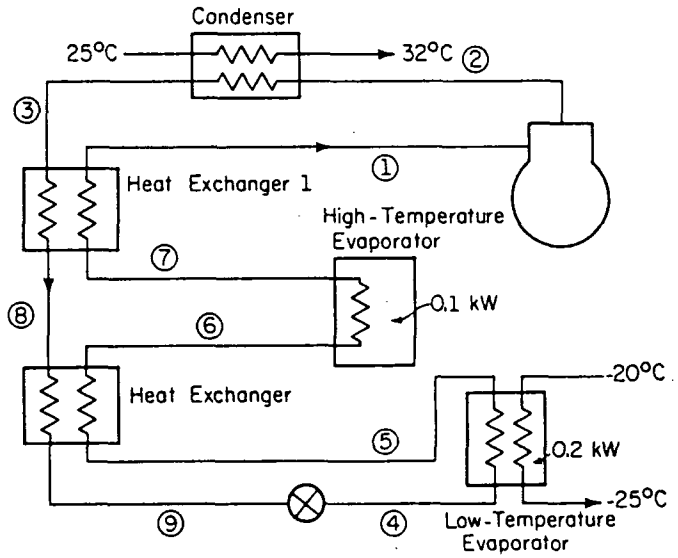

Figure 5. Two-evaporator system with refrigerant-to-refrigerant heat exchangers that was simulated while using refrigerant mixtures

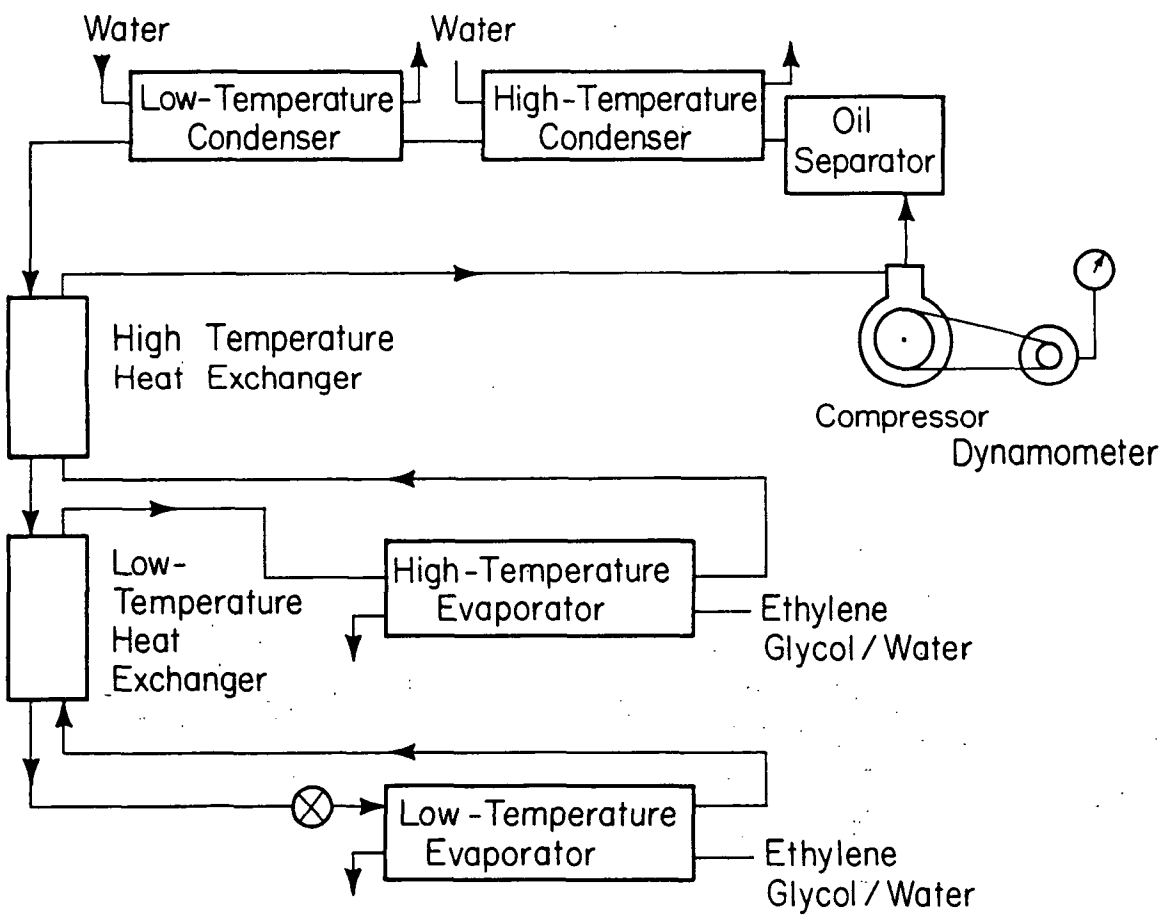

Figure 6. Schematic diagram of two-evaporator experimental facility

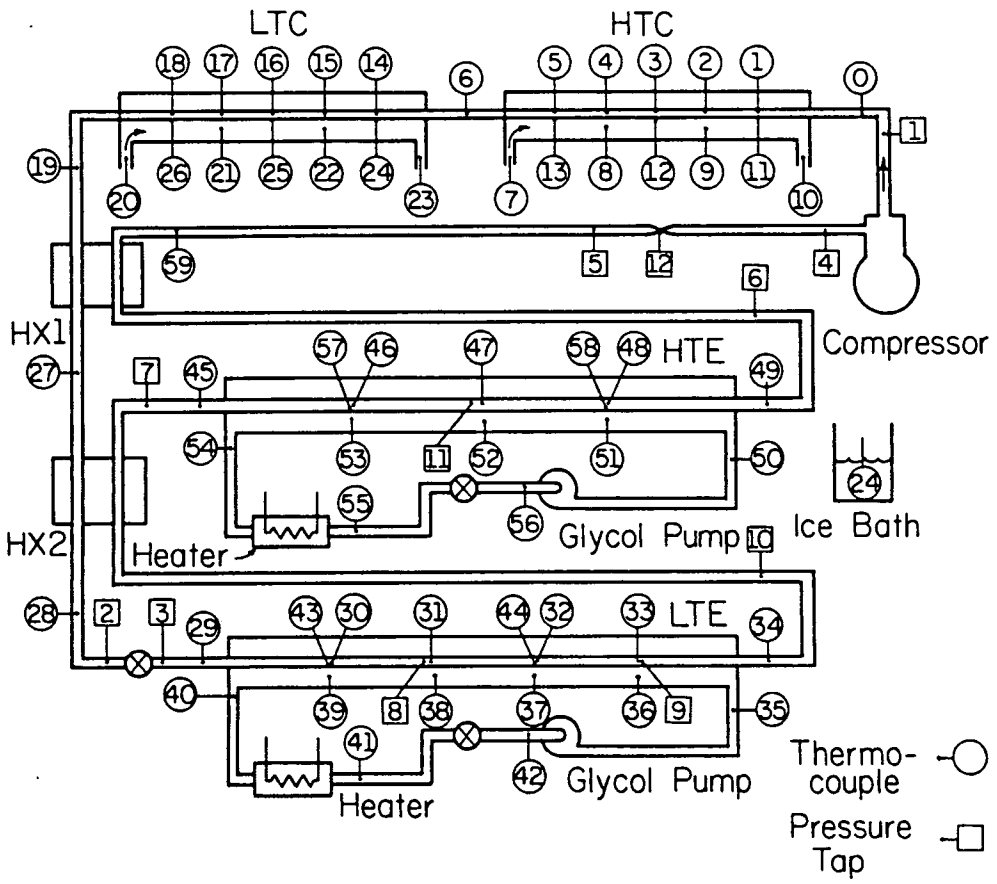

Figure 7. Location of instrumentation on the test facility

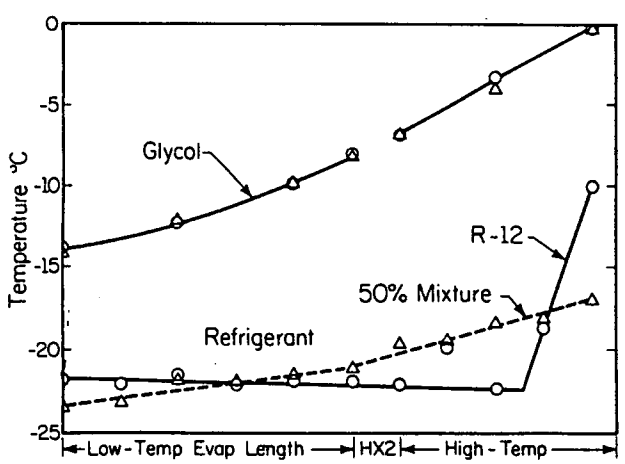

Figure 8. Temperature profiles of the refrigerant and ethylene glycol solution in the evaporators for R-12 and a 50% mixture of R-12/R-114

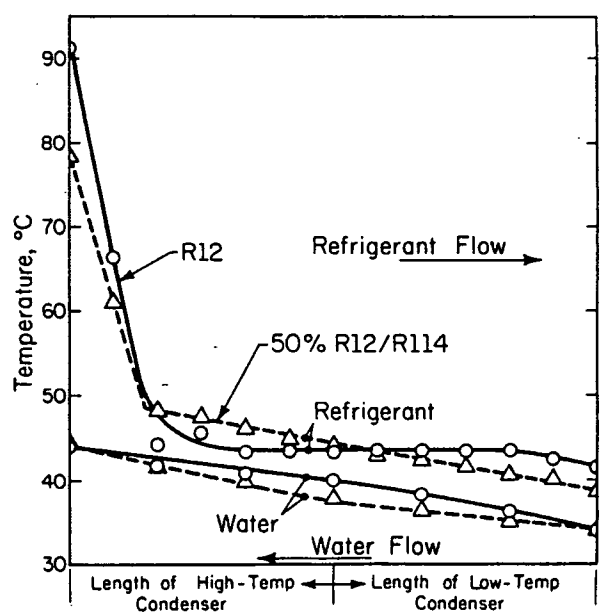

Figure 9. Temperature profiles of the refrigerant and cooling water in the condensers for R-12 alone and for 50% mixture of R-12/R-114

DISCUSSION

U.W. SCHULZ, Carrier Corporation, Syracuse, NY: How were the internal heat exchangers sized, and what effect do they have on the operaton conditions and the system efficiency?

STOECKER: The refrigerant-to-refrigerant heat exchangers were sized to provide approximately 10 C drop in the liquid-side temperature in each heat exchanger. The beneficial effect of these heat exchangers in a refrigerant-mixture system arises by virtue of a lower refrigerant temperature in the evaporator. The heat exchanger does not basically increase the refrigerating capacity, but it does lower the evaporating temperature for a given suction pressure.

R.G. MOKADAM, Sundstrand Corporation, Rockford, IL: It appears that there is degradation in heat transfer in boiling and condensation of a binary refrigerant mixture. From the measurements on your system, could you indicate the actual boiling and condensation heat transfer coefficients for the binary mixtures and pure refrigerants?

STOECKER: Some researchers (although not all) have reported reductions in the condensing and boiling heat-transfer coefficients in comparison to the values of either constituent singly. Our experience is that the condensing coefficient drops, particularly in the midrange of the condenser, as the concentration of R-114 in R-12 increases.