ornl

ORNL/CON-273

OAK RIDGE
NATIONAL
LABORATORY

MARTIN MARIETTA

Energy-Use Impact of Chlorofluorocarbon Alternatives

S. K. Fischer
F. A. Creswick

OPERATED BY
MARTIN MARIETTA ENERGY SYSTEMS, INC.
FOR THE UNITED STATES
DEPARTMENT OF ENERGY

This report has been reproduced directly from the best available copy.

Available to DOE and DOE contractors from the Office of Scientific and Technical Information, P.O. Box 62, Oak Ridge, TN 37831; prices available from (615) 576-8401, FTS 626-8401.

Available to the public from the National Technical Information Service, U.S. Department of Commerce, 5285 Port Royal Rd., Springfield, VA 22161.
NTIS price codes—Printed Copy: A07 Microfiche A01

This report was prepared as an account of work sponsored by an agency of the United States Government. Neither the United States Government nor any agency thereof, nor any of their employees, makes any warranty, express or implied, or assumes any legal liability or responsibility for the accuracy, completeness, or usefulness of any information, apparatus, product, or process disclosed, or represents that its use would not infringe privately owned rights. Reference herein to any specific commercial product, process, or service by trade name, trademark, manufacturer, or otherwise, does not necessarily constitute or imply its endorsement, recommendation, or favoring by the United States Government or any agency thereof. The views and opinions of authors expressed herein do not necessarily state or reflect those of the United States Government or any agency thereof.

ORNL/CON-273

Energy Division

ENERGY-USE IMPACT OF CHLOROFLUOROCARBON ALTERNATIVES

S. K. Fischer
F. A. Creswick

Date Published—February 1989

Prepared by the
OAK RIDGE NATIONAL LABORATORY
Oak Ridge, Tennessee 37831-6285
operated by
MARTIN MARIETTA ENERGY SYSTEMS, INC.
for the
U. S. DEPARTMENT OF ENERGY
under Contract No. DE-AC05-84OR21400

CONTENTS

LIST OF FIGURES vii

LIST OF TABLES ix

TABLE OF REFRIGERANTS AND CHEMICAL SYMBOLS xi

ABBREVIATIONS, ACRONYMS, AND INITIALISMS xiii

ACKNOWLEDGMENTS xv

ABSTRACT xvii

EXECUTIVE SUMMARY xix
- PURPOSE AND SCOPE xix
- ALTERNATIVES CONSIDERED xx
  - Preferred Alternative xxi
  - Fallback Position xxi
  - Worst-Case Scenario xxii
  - Advanced Technology Alternatives xxii
- METHODOLOGY xxiii
- NATIONAL ENERGY IMPACT xxiii
- RESULTS AND CONCLUSIONS xxiii
- REFERENCES xxiv

1. INTRODUCTION 1

2. CFCs AND STRATOSPHERIC OZONE 5
- 2.1 INTRODUCTION 5
- 2.2 OZONE-DEPLETING POTENTIAL INDEX 5
- 2.3 THE CHEMICALS AND THEIR APPLICATIONS 5
- 2.4 ENERGY DEPENDENT APPLICATIONS 5

3. DOMESTIC REFRIGERATORS/FREEZERS 9
- 3.1 INTRODUCTION 9
- 3.2 ASSUMED CURRENT TECHNOLOGY 9
- 3.3 ALTERNATIVES CONSIDERED 10
  - 3.3.1 Preferred Alternative 10
  - 3.3.2 Fallback Position 10
  - 3.3.3 Worst-Case Alternative 11
  - 3.3.4 Advanced Technology Options 11
- 3.4 CALCULATIONAL PROCEDURE 11
- 3.5 NATIONAL ENERGY IMPACT 14
- 3.6 COMMENTS AND CAVEATS 14

4. HOUSEHOLD FREEZERS 17
4.1 INTRODUCTION 17

5. AUTOMOBILE AIR CONDITIONING 20
5.1 INTRODUCTION 20
5.2 ASSUMED CURRENT TECHNOLOGY 20
5.3 ALTERNATIVES CONSIDERED 21
5.3.1 Preferred Alternative 21
5.3.2 Fallback Position 21
5.3.3 Worst-Case Scenario 22
5.3.4 Advanced Technology Alternatives 22
5.4 CALCULATIONAL PROCEDURE 22
5.5 NATIONAL ENERGY IMPACT 23
5.6 COMMENTS AND CAVEATS 24

6. RETAIL REFRIGERATION 26
6.1 INTRODUCTION 26
6.2 ASSUMED CURRENT TECHNOLOGY 27
6.3 ALTERNATIVES CONSIDERED 27
6.3.1 Preferred Alternative 27
6.3.2 Fallback Position 27
6.3.3 Worst-Case Scenario 28
6.3.4 Advanced Technology Options 28
6.4 CALCULATIONAL PROCEDURE 28
6.5 NATIONAL ENERGY IMPACT 28
6.6 COMMENTS AND CAVEATS 30

7. BEVERAGE VENDING MACHINES 32
7.1 INTRODUCTION 32
7.2 ASSUMED CURRENT TECHNOLOGY 32
7.3 ALTERNATIVES CONSIDERED 32
7.3.1 Preferred Alternative 32
7.3.2 Fallback Position 33
7.3.3 Worst-Case Scenario 33
7.3.4 Advanced Technology Options 33
7.4 NATIONAL ENERGY IMPACT 33
7.5 COMMENTS AND CAVEATS 35

8. WATER HEATERS 36
8.1 INTRODUCTION 36
8.2 ASSUMED CURRENT TECHNOLOGY 36
8.3 ALTERNATIVES CONSIDERED 36
8.3.1 Preferred Alternative 36
8.3.2 Fallback Position 37
8.3.3 Worst-Case Scenario 37
8.3.4 Advanced Technology Options 37
8.4 CALCULATIONAL PROCEDURE 37
8.4.1 Daily Energy Use 37
8.4.2 National Energy Impact 37
8.5 COMMENTS AND CAVEATS 38

9. CENTRIFUGAL CHILLERS 40
9.1 INTRODUCTION 40
9.2 ASSUMED CURRENT TECHNOLOGY 42
9.3 ALTERNATIVES CONSIDERED 42
9.3.1 Preferred Alternative 42
9.3.2 Fallback Position 43
9.3.3 Worst-Case Scenario 43
9.3.4 Advanced Technology Options 44
9.4 NATIONAL ENERGY IMPACT 44
9.5 COMMENTS AND CAVEATS 45

10. REFRIGERATED TRANSPORT 47
10.1 INTRODUCTION 47
10.2 ASSUMED CURRENT TECHNOLOGY 47
10.3 ALTERNATIVES CONSIDERED 48
10.3.1 Preferred Alternative 48
10.3.2 Fallback Position 48
10.3.3 Worst-Case Scenario 48
10.3.4 Advanced Technology Options 48
10.4 CALCULATIONAL PROCEDURE 48
10.4.1 National Energy Impact 49
10.5 COMMENTS AND CAVEATS 49

11. RESIDENTIAL INSULATION 51
11.1 INTRODUCTION 51
11.2 ASSUMED CURRENT TECHNOLOGY 52
11.3 ALTERNATIVES CONSIDERED 52
11.3.1 Preferred Alternative 52
11.3.2 Fallback Position 52
11.3.3 Worst-Case Scenario 53
11.3.4 Advanced Technology Options 53
11.4 CALCULATIONAL PROCEDURE 53
11.5 COMMENTS AND CAVEATS 57

12. FOUNDATION INSULATION 59
12.1 INTRODUCTION 59
12.2 ASSUMED CURRENT TECHNOLOGY 59
12.3 ALTERNATIVES CONSIDERED 61
12.3.1 Preferred Alternative 61
12.3.2 Fallback Position 61
12.3.3 Worst-Case Scenario 61
12.3.4 Advanced Technology Alternatives 61
12.4 CALCULATIONAL PROCEDURE 62
12.5 NATIONAL ENERGY IMPACT 62

13. COMMERCIAL CONSTRUCTION 63
13.1 INTRODUCTION 63
13.2 ASSUMED CURRENT TECHNOLOGY 63
13.3 ALTERNATIVES CONSIDERED 64
13.3.1 Preferred Alternative 64
13.3.2 Fallback Position 65
13.3.3 Worst-Case Scenario 65

13.3.4 Advanced Technology Options 65
13.4 CALCULATIONAL PROCEDURE 66
13.5 NATIONAL ENERGY IMPACT 66
13.6 COMMENTS AND CAVEATS 66

14. LOW-SLOPE ROOFS 67
14.1 INTRODUCTION 67
14.2 ASSUMED CURRENT TECHNOLOGY 67
14.3 ALTERNATIVES CONSIDERED 69
14.3.1 Preferred Alternative 69
14.3.2 Fallback Position 70
14.3.3 Worst-Case Scenario 70
14.4 CALCULATIONAL PROCEDURE 70
14.5 COMMENTS AND CAVEATS 72

15. CONCLUSIONS AND RECOMMENDATIONS 75

16. REFERENCES 77

Appendix A. CHLOROFLUOROCARBONS AND STRATOSPHERIC OZONE . . . A-1

Appendix B. THERMODYNAMIC CYCLE CALCULATIONS B-1

Appendix C. INCREASED BUILDING LOADS FOR RESIDENTIAL BUILDINGS (WALLS) C-1

Appendix D. FOUNDATION INSULATION D-1

LIST OF FIGURES

2.1. 1986 U.S. production of ozone-depleting substances (1633 million lb) 6
2.2. Ozone-depleting potential of 1986 U.S. production of chlorine and bromine compounds (852 equivalent million lb) 7
2.3. Estimated distribution of 1986 U.S. production of CFC-11 and CFC-12 between specific applications in terms of ozone-depleting potential (524 equivalent million lb) 7
9.1. Cooling capacities of reciprocating, screw, and centrifugal chillers 41
11.1. Cutaway drawing of residential wall construction 55
12.1. Cutaway drawing of a basement wall insulated on the exterior surface with extruded polystyrene 60
14.1. Cutaway drawing of a built-up roof 68
14.2. Sensitivity of national energy penalties to variations in R-value 73

LIST OF TABLES

S.1. National energy impacts of alternative technologies . . . xxv
2.1. Ozone-depleting potential, 1986 production, and CFC-11 equivalent production levels for halogenated compounds . . . 6
3.1. Refrigerator/freezer cabinet heat loss data . . . 13
3.2. Analysis of alternatives for refrigerator/freezers . . . 13
3.3. National energy impact of alternatives for domestic refrigerator/freezers . . . 15
4.1. Analysis of alternatives for household freezers . . . 18
4.2. National energy impact of alternatives for domestic freezers . . . 18
5.1. Energy impact for mobile air conditioning in passenger vehicles . . . 23
5.2. National energy impact of chlorofluorocarbon restrictions for mobile air conditioning . . . 24
6.1. Analysis of alternatives for refrigerated display cases . . . 29
6.2. National energy impact of chlorofluorocarbon restrictions for retail refrigeration . . . 29
7.1. Energy impact for vending machines . . . 34
7.2. National energy impact of chlorofluorocarbon restrictions for vending machines . . . 34
8.1. Energy impact for domestic water heaters . . . 38
8.2. National energy impact of chlorofluorocarbon restrictions for domestic water heaters . . . 39
9.1. Energy impact for centrifugal chillers . . . 44
9.2. National energy impact of chlorofluorocarbon restrictions for centrifugal chillers . . . 44
10.1. Energy impact for refrigerated transportation . . . 50
10.2. National energy impact of chlorofluorocarbon restrictions for refrigerated transportation . . . 50
11.1. Summary of alternative sheathing materials . . . 54
11.2. Total wall R-value of wall using alternative sheathing materials . . . 54
11.3. Energy penalties for chlorofluorocarbon-foam alternatives in residential walls . . . 56
12.1. Energy penalties for chlorofluorocarbon-foam alternatives in foundation insulation . . . 62
13.1. Assumptions for alternative commercial . . . 65
13.2. National energy impact of chlorofluorocarbon alternatives for commercial wall insulation . . . 66
14.1. Thermal resistance of a typical low-slope commercial roof . . . 69
14.2. Estimated winter heat losses for roof options . . . 71
14.3. Estimated summer heat gains for roof options . . . 71
14.4. Energy-use impacts for low-slope roofs . . . 72

TABLE OF REFRIGERANTS AND CHEMICAL SYMBOLS[a]

Refrigerant number	Acronym	Chemical formula	Name
11	CFC-11	CCl_3F	trichlorofluoromethane
12	CFC-12	CCl_2F_2	dichlorodifluoromethane
22	HCFC-22	$CHClF_2$	chlorodifluoromethane
113	CFC-113	CCl_2FCClF_2	trichlorotrifluoroethane
114	CFC-114	$CClF_2CClF_2$	dichlorotetrafluoroethane
115	CFC-115	$CClF_2CF_3$	chloropentafluoroethane
123	HCFC-123	CF_3CHCl_2	dichlorotrifluoroethane
134a	HFC-134a	CF_3CH_2F	tetrafluoroethane
141b	HCFC-141b	CCl_2FCH_3	dichlorofluoroethane
142b	HCFC-142b	CH_3CClF_2	chlorodifluoroethane
152a	HFC-152a	CH_3CHF_2	difluoroethane
290	*	C_3H_8	propane
*	*	O_3	ozone
717	*	NH_3	ammonia
*	*	CO	carbon monoxide
744	*	CO_2	carbon dioxide
*	*	NO_2	nitrogen dioxide
744a	*	N_2O	nitrogen oxide
50	*	CH_4	methane
500	HCFC-500	refrigerants 12 and 152a (73.8/26.2% by weight)	
502	HCFC-502	refrigerants 22 and 115 (48.8/51.2% by weight)	

[a]See also page xiii.

ABBREVIATIONS, ACRONYMS, AND INITIALISMS*

A/C	air conditioning
AHAM	Association of Home Appliance Manufacturers
CFC	chlorofluorocarbon
COP	coefficient of performance
DOE	Department of Energy
EER	energy efficiency ratio
EPA	Environmental Protection Agency
EPS	expanded polystyrene
EXPS	extruded polystyrene
GM	General Motors Corporation
HCFC	hydro-chlorofluorocarbon
HFC	hydrofluorocarbon
HVAC	heating, ventilating, and air conditioning
NAECA	National Appliance Energy Conservation Act
NIST	National Bureau of Standards
ODP	ozone depleting potential
ORNL	Oak Ridge National Laboratory
PIR	polyisocyanurate
PUR	polyurethane
R&D	research & development
SEER	seasonal energy efficiency ratio
uv	ultraviolet

*See also page xi.

ACKNOWLEDGMENTS

For information used in this report, the following contributors are gratefully acknowledged: Steve Petersen and Hunter Fanney of the Center for Building Technology, National Bureau of Standards; John Dieckmann of Arthur D. Little; Jeff Christian, George Courville, and Dave McElroy of the Building Thermal Envelope Materials Research Program, Oak Ridge National Laboratory; and consultants M. Kent Anderson of Bethesda, Maryland, Joseph A. Pietsch of Dallas, Texas, and Hans Spauschus of Atlanta, Georgia. The authors are particularly grateful for the support provided by the U.S. Department of Energy, Office of Buildings and Community Systems, and especially to Terry Statt and John Ryan for the advice and encouragement they provided.

ABSTRACT*

The fully halogenated chlorofluorocarbons (CFCs) have been identified as contributing to reductions in stratospheric ozone. The United States has ratified and signed the Montreal Protocol mandating a phased reduction in the production of certain compounds containing chlorine and bromine, including CFC-11 and CFC-12, and the U.S. Environmental Protection Agency is preparing rules to enforce the provisions of this international treaty. All of the major producers of these chemicals in the United States have announced that they will cease production of the fully halogenated CFCs as soon as alternative refrigerants and blowing agents are available. The CFCs that are affected by the Protocol, however, have high thermal efficiencies in refrigeration systems and foam insulations. There is a strong likelihood that national energy use will increase through the use of environmentally acceptable alternative chemicals and technologies.

This study is to provide the U.S. Department of Energy with an estimate of the potential severity of the energy-use impacts and an identification of the equipment and insulation applications that will be most seriously affected in terms of their energy use. It looks only at energy related applications of CFC-11 and CFC-12. It does not examine the energy impacts of alternative refrigerants for equipment that uses HCFC-22.

The major energy-related applications of the fully halogenated CFCs (CFC-11, CFC-12, CFC-113, CFC-114, and CFC-115) were identified, and the national annual energy use of each application was estimated on the basis of the energy use of a "typical" unit and the number of units nationwide. Substitutes or alternatives to the CFCs were selected according to four different groups: (1) chemicals that are not yet commercially available but would have properties very similar to those they would replace and hence are "near drop-in" substitutes; (2) a "fallback" scenario relying on currently available compounds that could be used in each application but require significantly more product development; (3) a "worst case" in which new chemicals do not become available, chlorine-containing compounds (e.g., HCFC-22) cannot be used as substitutes for the fully halogenated CFCs, and fiberglass insulation is used in place of CFC-blown foams; and (4) an "advanced technology" using highly efficient insulation and refrigeration systems.

The national energy use of each application was estimated for the alternative scenarios in the same manner as was done for the base case using the regulated CFCs. The national energy-use impacts were determined by comparing the energy use of each alternative scenario with that of the base case.

If the "near drop-in" compounds can be developed as substitutes for the fully halogenated CFCs, there will not be a significant increase in national energy use. These compounds (principally HFC-134a, HCFC-123, and HCFC-141b) are not yet commercially available and are of unknown toxicity. Problems related to lubricants

*See page xi for definitions of refrigerants and chemical symbols.

and materials compatibility have been identified for each. If these compounds are not developed successfully, there will be an increase in national energy use of about one quad per year (10^{15} Btu/year). This energy impact doubles in the worst-case scenario. Development of the advanced technologies could lead to a reduction in national energy use of about 0.83 quad/year.

The major energy impacts will occur in those applications that rely almost exclusively on CFC-blown foam insulation. These include household refrigerators, freezers, water heaters, roofs of commercial buildings, and insulated building foundations. There is a smaller energy penalty associated with refrigeration equipment, although this is contingent upon attaining the same high compressor efficiencies for the alternative refrigerants that are possible now for the CFCs.

EXECUTIVE SUMMARY*

PURPOSE AND SCOPE

In September 1987 the U.S. government signed the Montreal Protocol[1] to limit the production and use of a class of chemicals that contribute to the destruction of ozone in the stratosphere. This treaty was ratified by the U.S. Senate and signed into law by the President, and regulations to implement the provisions of the Protocol are being put into place by the U.S. Environmental Protection Agency[2] (EPA). Two groups of chemicals are covered by the Protocol; the fully halogenated chlorofluorocarbons (CFCs) and fluorocarbons containing bromine known as Halons®. The Halons are not used in energy-related applications, so this report is limited to the CFCs. These are composed of carbon, fluorine, and chlorine and are believed to be the primary human source of recent increases in the levels of chlorine in the atmosphere. Chlorine from these chemicals acts as a catalyst in reactions that remove ozone from the atmosphere. Stratospheric ozone is needed to absorb light rays in the ultraviolet (uv) range and shield plant, human, and animal life on the surface of the earth from harmful levels of uv radiation. It has been estimated by EPA that depletion of stratospheric ozone resulting from continued use of CFCs at current levels of production will cause 40 million additional cases of skin cancers, higher incidence of cataracts, and unknown damage to plants and animals.

The U.S. economy depends on CFCs in many different applications because they are effective, nontoxic, nonflammable, and inexpensive. These applications include the use of CFC-12 as the working fluid in commercial and residential refrigerators and freezers and in automobile air conditioners, and the predominant use of CFC-11 in centrifugal chillers for cooling large commercial buildings. Both CFC-11 and CFC-12 are used as "blowing agents" in producing plastic foam insulations for home appliances, residential and commercial buildings, refrigerated trailers, and railroad cars. Reductions in production of these chemicals, as mandated by the Montreal Protocol, will result in shortages and consequently could lead to less efficient substitutes and an increase in national energy use. Any such increase in national energy use is a concern of the U.S. Department of Energy (DOE).

DOE requested that Oak Ridge National Laboratory (ORNL) conduct a study to evaluate the long-range impacts of a complete phaseout of the fully halogenated CFCs on national energy use. The methods and findings of that study are summarized in this report. The analysis is a straightforward comparison of the energy use for each application of CFCs and includes comparisons with alternative chemicals and technologies, and the analysis is based on the current national inventory of buildings and equipment and the best engineering data available. The impact on refrigerators, for example, is determined by comparing the annual

---

*See page xi for definitions of refrigerants.

energy use of 113 million refrigerator/freezers with CFC-12 refrigeration systems and CFC-11 blown polyurethane insulation with an equal number of refrigerators that use a different chemical for refrigeration (e.g., HCFC-22) and non-CFC insulation [e.g., expanded polystyrene insulation board (EPS)]. The impacts could be less, because some supplies of CFCs will continue to be available in the foreseeable future, but more precise values can be determined only by an analysis that uses detailed assumptions about both the allocation of future production between CFC-11 and CFC-12 (because the regulations control the composite or total production) and the distribution of scarce supplies among competing applications. That degree of detail is not necessary to answer the questions of interest to DOE.

The results of this study are useful in determining the magnitude of any possible energy-use impacts (i.e., large, small, or insignificant), what applications of CFCs are most affected, and where resources can be used most effectively to mitigate those impacts. A companion report, *A Plan for Research and Development of Chlorofluorocarbon Alternatives in Refrigeration and Buildings Applications*, outlines specific research projects necessary to develop energy-efficient alternatives to CFCs, what activities are being conducted by private industry, and how a government program can contribute to developing substitute technologies.[3]

ALTERNATIVES CONSIDERED

The energy-use impacts are examined for applications of CFC-11 and CFC-12 under five different cases:

1. the current technology,
2. the preferred alternatives,
3. a fallback position if the preferred alternatives do not prove viable,
4. a worst-case scenario in the event that no chlorine-containing compounds or new refrigerants are feasible substitutes, and
5. advanced technologies that need further research and development (R&D) for proof of concept and to demonstrate their viability.

The current technologies are primarily those that rely on mechanical refrigeration using CFC-12 and foam insulations using CFC-11 and CFC-12.* The preferred alternatives rely on the development of new chemical compounds that have approximately the same properties as CFC-11 and CFC-12 but that do not pose a threat to the ozone layer. These would include compounds such as HFC-134a, HCFC-141b, and HCFC-123 that have not been produced commercially before. The fallback positions depend on proven compounds and technologies, such as HCFC-22 and EPS. The worst-case scenario considers the possibility that the list of controlled compounds will be expanded and looks at currently available

*"CFC-11" and "CFC-12" are used to denote trichlorofluoromethane and dichlorodifluoromenthane, respectively, the compounds commonly referred to as refrigerants 11 and 12 in the refrigeration industry. The "CFC" designation promoted by E. I. DuPont de Nemours Company, Inc., is used in this report to avoid confusion when discussing insulation R-values and to distinguish among the fully halogenated chlorofluorocarbons (CFCs), the nonfully halogenated chlorofluorocarbons (HCFCs), and fluorocarbons (HFCs).

alternatives that do not rely on chlorine compounds or new technologies. Finally, the advanced technology options consider the energy saving opportunities of advances in insulations and high-efficiency refrigeration equipment.

Preferred Alternative

American industry is aware of the problems and challenges presented by restrictions on CFCs and is actively seeking alternative chemicals and new technologies that are less detrimental to the atmospheric ozone. The preferred response in many cases is to develop close substitutes, "near" drop-in replacements (i.e., they will require minor changes in equipment design or use), for CFC-11 and CFC-12 as they are phased out through mandated reductions in production. The most promising of these new compounds are HCFC-141b, HCFC-123 and HFC-134a. The thermodynamic properties of HCFC-141b and HCFC-123 closely resemble those of CFC-11, and HFC-134a is similar to CFC-12, but none of these is ideal. Many of their chemical properties are sufficiently different from those of the compounds they would replace that there can be compatibility problems with elastomers, motor winding coatings, and oil solubility. All of these chemicals are under scientific scrutiny to determine their toxicity properties, and final results of these tests will not be known for several years. Preliminary experimental data indicate that energy use may be 8 to 9% higher in appliances when HFC-134a is used as a drop-in substitute for CFC-12 (E. Vineyard, ORNL, personal communication, May 1988). None is as thermally effective in insulating foams as the materials to be replaced, with a 5 to 9% increase in thermal conductivity of the foam and consequently a similar decrease in insulating effect (R. Crooker, personal communication, September 1988). Finally, no U.S. manufacturer currently has a full-scale manufacturing process to produce these chemical compounds. In spite of these shortcomings, these compounds appear to be the most promising alternatives on the technological horizon.

Fallback Position

There are technical as well as health and safety concerns that might make it unlikely or impossible to use HCFC-123, HCFC-141b, or HFC-134a in some applications. In that case, the alternatives for appliances are not very attractive because of the necessary changes in design and energy efficiency. The best currently available substitute for foam insulations blown with CFC-11 or CFC-12 is EPS, a non-CFC-blown foam insulation which has a much higher thermal conductivity than the CFC foams it would replace and which is not readily adaptable to applications like refrigerators. In most cases, the second choice for a working fluid in a vapor compression refrigeration cycle is HCFC-22, which is used widely in residential heat pumps and air conditioners, but there are major engineering obstacles to its use as a substitute for CFC-12 in other applications. HCFC-22 operates at much higher pressures and temperatures in applications where CFC-12 is used today; consequently, stronger materials and more complicated designs would be needed. It has been estimated that it would cost the automobile industry $1 billion to retool to use HCFC-22 in air conditioners.

EPS is widely used in building insulation and in most cases it can be substituted for CFC-blown foams. The cell structure of EPS differs from that of CFC-12-blown polystyrene foam, but this is not a problem if high-quality facing materials are used in building walls. However, EPS may not be appropriate for

low-slope roofs and foundation insulation, where it is in greater contact with moist conditions.

Worst-Case Scenario

In the worst-case scenario considered here, only currently available, chlorine-free compounds would be considered acceptable substitutes for the regulated CFCs. This is a conceivable situation if there are additional CFC restrictions because of real or perceived risks. In this situation, HCFC-22 would no longer be a viable substitute for CFC-12 in refrigeration systems, and, in fact, there are no known attractive alternatives available. Of the available substitutes, ammonia and propane are among those that are considered in this study. Each of these has serious problems both in engineering and in health and safety terms that must be addressed if these compounds are used in the future, but only the energy impact has been considered in this study.

It is also very likely that EPS is not a viable alternative to foam insulations in many applications. EPS is used extensively and effectively as building insulation, but it may not be acceptable in appliances because it would not provide the structural support that the CFC blown foams do for the appliance cabinets and it could be very difficult to work with on assembly lines. Problems with flammability may also restrict its use. The next best substitute for foam insulations is fiberglass batts or boards, but the insulative value of these materials is much lower than that of the foams they would replace. It is not always economically justified to use thicker layers of insulation to maintain the same thermal performance available using CFC blown foams, and as a result there would be increased thermal losses.

It should be noted that the "worst case" postulated here does not include the effects that would be caused by expanding the proposed regulations to restrict production of other chemicals. If, for example, production and use of HCFC-22 were restricted, there would be energy impacts resulting from substitute refrigerants in residential heat pumps, central air conditioners, and other applications not included in these calculations. The energy impacts of this expanded scenario could be dramatic and are beyond the scope of the current effort, but they will be evaluated in a later study.

Advanced Technology Alternatives

There are opportunities for reducing energy use with highly efficient substitutes for CFC-11- and CFC-12-blown insulations and refrigeration systems. Recent research has been directed toward vacuum-insulated panels that give R-20/in. or more when used in conjunction with non-CFC foams in the walls of refrigerators and water heaters, and R-10/in. may be possible in other insulation applications. Further development is needed to demonstrate the long-term viability of these materials, but they might offer a great energy savings. Developments in Stirling cycle refrigeration, thermoelectric, and superconducting magnetic heat pump technologies may prove to be more efficient than current vapor compression systems currently using CFC-12. It is possible that 50% of the theoretical Carnot cycle efficiency can be achieved in some applications. Major advances are needed, though, before prototypes can be built and tested using these technologies.

METHODOLOGY

The energy use of each alternative technology is evaluated in a simplified way, usually on the basis of daily energy use per unit, and then compared with the energy use of the current technology. This is intended to be a long-range study and does not address the immediate impacts if the use of CFCs were stopped today. In fact, two cases—the preferred alternatives and the advanced technology—assume the development of completely new products. A national energy impact is estimated by comparing the annual energy use nationwide for the substitute equipment with what the energy use would be for the same number of units using the current technology. This comparison assumes a fixed number of units nationwide and either a complete turnover of equipment, 100% market penetration, or substantial construction of new buildings, with the alternative chemical compounds or refrigeration cycles completely replacing the old. This change would take 5 to 15 years for automobile air conditioners and home appliances and 30 to 50 years for buildings and building heating, ventilating, and air conditioning (HVAC) equipment. Finally, only current uses of CFC-11 and CFC-12 have been examined, and the impact of alternatives to HCFC-22 in heat pumps and air conditioners is not evaluated.

NATIONAL ENERGY IMPACT

The energy impacts of alternative technologies (Table S.1) should be placed in the context of national energy use. The United States uses 75 quads of energy per year for all applications, such as space conditioning, transportation, and manufacturing. One quad of energy is enough to heat 14 million homes for 1 year, and "is roughly equivalent to a year's consumption of oil at the rate of 500,000 barrels per day."[4] In dollar terms, that is about $3.3 billion (based on $18/barrel). The worst-case scenario, in which chlorinated refrigerants and EPS insulation are not acceptable as alternatives, represents a significant increase in energy use as well as severe economic and social disruptions.

It should be reiterated that these energy impact estimates do not include current applications of HCFC-22 or other CFCs not addressed in the Montreal Protocol or proposed EPA regulations (although the worst case does exclude HCFC-22 as a substitute for CFC-12). Obviously, because of the widespread use of HCFC-22 in air conditioning and heat pump equipment, the potential impacts of such additional controls would be very dramatic; and the economic and social consequences could be quite severe.

RESULTS AND CONCLUSIONS

The results in Table S.1 represent an alarming reversal of recent successes in energy conservation. The impacts appear small (0.21, 1.07, and 2.27 quads/year for the preferred, fallback, and worst-case scenarios, respectively) because they are only 0.5 to 3.0% of total national energy use. However, these values represent 1.5 to 9% of the energy use in the residential and commercial sectors at a time when additional energy conservation is desired.

Most of the increases in national energy use can be attributed to changes in insulation and refrigeration efficiency of building equipment, as shown by the first horizontal grouping of applications in Table S.1. The bulk of the impact would be

Table S.1. National energy impacts of alternative technologies (quads/year)

Application	Preferred response	Fallback position	Worst-case scenario	Advanced technology solution
		Building equipment		
Refrigerators and freezers	0.10	0.52	1.05	-0.58
Water heaters	0.01	0.04	0.09	-0.06
Beverage vending machines	0.01	0.03	0.05	-0.03
Retail refrigeration	-0.01	-0.01	-0.03	-0.05
Centrifugal chillers	0.01	0.10	0.36	a
Subtotal	0.12	0.68	1.52	-0.72
		Building envelopes		
Residential walls	0.01	0.02	0.05	-0.04
Residential foundations	0.00	0.17	0.32	a
commercial walls	0.02	0.04	0.08	-0.08
commercial roofs	0.03	0.11	0.20	a
Subtotal	0.06	0.34	0.65	-0.12
		Transportation		
Refrigerated transport	0.00	0.01	0.02	-0.01
Mobile A/C[b]	0.03	0.04	0.08	0.02
Subtotal	0.03	0.05	0.10	0.01
TOTAL	0.21	1.07	2.27	-0.83

[a]Advanced technologies are not evaluated for these applications.
[b]A/C = air conditioner.

in household refrigerators, freezers, and water heaters. The use of CFC-blown foam insulations and the improvements in the mechanical systems have led to 40 to 50% reductions in energy use by refrigerators in the last 16 years. The National Appliance Energy Conservation Act of 1987 requires an additional reduction of 40% from 1987 levels in these appliances. The alternatives available to replace CFC-11-blown foam and CFC-12 refrigeration, however, will result in 12 to 30% increases in energy use from the 1987 levels, as shown in the first three columns of Table S.1. Significant contributions to the energy impact in building equipment also derive from substitute insulation in soft drink machines and from substitute working fluids for centrifugal chillers in commercial buildings.

There are also fairly large impacts for buildings applications in which foam boards or sprayed urethane are used alone rather than in conjunction with fiberglass batts, as is the case with foundation insulation and the roofs and walls of some commercial buildings. Those applications in which foams are used in addition to fiberglass batts, such as in residential walls, have a low impact. Additionally, the 0.06, 0.34, and 0.65 quad/year for the preferred, fallback, and worst-case scenarios for building thermal envelopes are based on current levels of usage in building construction. However, residential and commercial construction trends are towards using higher proportions of CFC-blown foams, and these lost opportunities for energy conservation are in addition to the impacts identified here.

The energy impacts in the transportation sector are not large relative to the other applications listed, although they are not insignificant to the individuals affected. In refrigerated shipping, for instance, the carrier either has higher fuel costs for refrigeration (because of poorer insulation) or carries a smaller cargo. Each 1-in. increase in the thickness of insulation (and more than 1 in. would be needed to keep fuel costs the same) represents a 5% decrease in usable cargo volume—a direct cost to the carrier and the consumer. The impacts in automobile air conditioning represent increases of 6 to 20% in fuel use.

A vigorous R&D program can alleviate most, if not all, of the adverse energy impacts that could occur as a result of not using CFC-11 and CFC-12 in the applications studied. The successful development of (and industry acceptance of) vacuum-insulated panels for appliance applications and some building applications can lead to significant energy savings, particularly for household refrigerators, freezers, and water heaters. To improve efficiencies of mechanical refrigeration systems, researchers at ORNL are developing an R&D plan to assess these opportunities.[3]

REFERENCES

1. *Montreal Protocol on Substances that Deplete the Ozone Layer*, United Nations Environment Programme, Final Act, September 1987.

2. Protection of Stratospheric Ozone: Final Rule and Proposed Rule, 40 CFR Pt. 82, *Federal Register*, V. 52, pp. 47486-523 Dec. 14, 1987.

3. F. A. Creswick, P. D. Fairchild, and J. E. Christian, *A Plan for Research and Development of Chlorofluorocarbon Alternatives for Refrigeration and Building Applications*, to be pubished, Oak Ridge National Laboratory, Oak Ridge, Tenn.

4. *Statistical Panorama*, pp. 1-2 (April 1987).

1. INTRODUCTION*

In September 1987 the U.S. government signed the Montreal Protocol[1] to the 1985 Vienna Convention for the Protection of the Ozone Layer to limit the production and use of a class of chemicals that contribute to the destruction of ozone in the stratosphere. This treaty was ratified by the U.S. Senate and signed into law by the President, and regulations to implement the provisions of the Protocol are being put into place by the U.S. Environmental Protection Agency[2] (EPA). Two groups of chemicals are covered by the Protocol; the fully halogenated chlorofluorocarbons and fluorocarbons** containing bromine which are known by the tradename Halons®, the Halons are not used in energy-related applications, so this report is limited to the CFCs. These are composed of carbon, fluorine, and chlorine and are believed to be the primary human source of recent increases in the levels of chlorine in the atmosphere. Chlorine from these chemicals acts as a catalyst in reactions that remove ozone from the atmosphere. Stratospheric ozone is needed to absorb light rays in the ultraviolet (uv) range and shield plant and animal life from harmful levels of uv radiation. It has been estimated by EPA that depletion of stratospheric ozone resulting from continued use of CFCs at current levels of production will cause tens of millions of additional cases of skin cancers, higher incidence of cataracts, and unknown damage to plant, human, and animal life.

The U.S. economy is dependent on CFCs in many different applications because they are effective, nontoxic, nonflammable, and inexpensive. These applications include the use of CFC-12 as the working fluid in commercial and residential refrigerators and freezers and in automobile air conditioners, and the predominant use of CFC-11 in centrifugal chillers for cooling large commercial buildings. Both CFC-11 and CFC-12 are used as "blowing agents" in producing plastic foam insulations for home appliances, residential and commercial buildings, refrigerated trailers, and railroad cars. Reductions in production of these chemicals, as mandated by the Montreal Protocol, will result in shortages and

---

*See page xi for definitions of refrigerants.

**The nomenclature used for the current refrigerants and foam-blowing agents is the terminology that is becoming standard in the refrigeration and insulation industries. "CFC" is used to indicate the fully halogenated compounds containing chlorine, fluorine, and carbon atoms. "HCFC" is used for the compounds in which one or more of the chlorine atoms have been replaced by a hydrogen atom, and "HFC" for compounds containing only hydrogen, fluorine, and carbon. The HCFCs pose less threat to the stratospheric ozone because they are less stable than CFCs; consequently, most of them break down at lower altitudes and do not release chlorine into the stratosphere. The HFCs obviously do not release any chlorine and have an ozone depletion potential of zero. Also, the substitute compounds do not have significant adverse greenhouse effects.

consequently could lead to less efficient substitutes and an increase in national energy use. Any such increase in national energy use is a concern of the U.S. Department of Energy (DOE).

This report provides a quantitative assessment of the potential energy-use impacts of possible alternatives to fully halogenated CFCs. With this information, DOE can determine whether support of R&D on alternative technologies is warranted and, if so, what the priority CFC end-use applications should be. The fundamental assumption in this work is that none of the chemicals identified as ozone-threatening in the Montreal Protocol will be used in consumer products at some unspecified future date. This decision to base the analysis on a full phaseout of CFCs was, in part, due to the desire of DOE to take a long-range view and to identify the upper limits of energy impacts rather than try to predict short-term impacts of production restrictions. This approach is further justified because of the many uncertainties associated with future stratospheric ozone protection measures, industry acceptance of CFC alternatives, and corporate decisions to stop production of fully halogenated CFCs.

Also, rather than attempt to consider an exhaustive list of alternative chemicals, classes of alternatives are considered in this study, with an individual substitute evaluated in each class. A more thorough investigation would provide little additional guidance for DOE's planning purposes. Particular attention is given to a class of preferred alternatives because substitutes of this type would require the fewest changes by industry and have the lowest energy-use impacts. HCFC-123, HCFC-141b, and HFC-134a are the primary compounds evaluated in this report because they are being pursued most vigorously by industry, but focusing on them should not leave the impression that they are the only, or even the best, alternatives. The energy impacts of other similar alternatives (e.g., a blend of HCFC-22 and HCFC-142b as a substitute for CFC-12) would not be significantly different than those for HCFC-141b and HFC-134a presented here.

This report begins with an overview of basic chemistry in the stratosphere to explain why CFCs are being regulated, but there is still considerable disagreement regarding what may be occurring in the stratosphere. The introductory material of this report also includes a review of the chemicals suspected of depleting the earth's protective ozone layer, the recent industry production levels of these compounds, and their distribution among various consumer products. The applications which demand closest scrutiny are those which use the largest shares of the chemicals thought to be most harmful to the ozone. Some of these applications or products are eliminated from further consideration in this study because even though new technologies may be needed, there will not be a direct energy penalty associated with them. The remaining products are evaluated to estimate how much additional energy will be used by adopting substitute chemicals, technologies, or production techniques or equipment.

Each chapter of this report examines a major energy-related application of CFCs, primarily CFC-11 and CFC-12, and includes a brief description of which CFCs are used for that application, the state of the technology, and possible substitutes for the CFCs involved. The alternatives considered here are not an exhaustive list. In each case, there will be other substitutes that could have been examined; each would have advantages and disadvantages and a corresponding energy penalty.

The energy use of each alternative technology is evaluated in a simplified way, usually on the basis of daily energy use per unit, and then compared with the energy use of the base technology. A national energy impact is estimated by comparing the annual energy use nationwide for the substitute equipment with

2. CFCs AND STRATOSPHERIC OZONE

2.1 INTRODUCTION

CFCs are particularly harmful to the stratospheric ozone because they have long lifetimes in the atmosphere and release chlorine into the stratosphere, where it has a catalytic action in the destruction of ozone. A detailed discussion of the chemical processes is given in Appendix A.

2.2 OZONE-DEPLETING POTENTIAL INDEX

Not all CFCs have the same ozone-depleting potential (ODP). The relative ODP is based on both the compound's lifetime in the atmosphere and on the number of chlorine atoms it contains.[5] HCFC-22, for instance, breaks down in the lower atmosphere and is much less harmful to stratospheric ozone than is CFC-11. The ODP a chemical is customarily computed relative to that of CFC-11. The ODP of some of the more common CFCs is listed in Table 2.1. These values represent what has been incorporated in the Montreal Protocol as the accepted ODPs for each chemical. The scientific literature contains a range of values for some compounds which comes from various sets of assumptions and one- or two-dimensional atmospheric models.

2.3 THE CHEMICALS AND THEIR APPLICATIONS

The overall impact of CFCs on the ozone layer depends on the production level and ODP of each compound. The 1986 U.S. production levels of the major halogenated compounds are listed in Table 2.1, as are their "relative" production levels—the ODP of each chemical multiplied by its absolute production level. These last two columns are also displayed in Figs. 2.1 and 2.2. Together these charts show that even though substantial amounts of HCFC-22 and methyl chloroform are produced, as shown in Fig. 2.1, they present only a small threat to the ozone relative to CFC-11, as shown in Fig. 2.2. CFC-11 and CFC-12 are the only compounds included in the Montreal Protocol that are used to a significant degree in energy-related applications. Important applications of each are shown in Fig. 2.3.

2.4 ENERGY DEPENDENT APPLICATIONS

CFC restrictions will cause the greatest energy-use increases in applications that use CFC-11 or CFC-12 to produce rigid foam insulation or as a working fluid in mechanical heating and cooling equipment. The rigid foams fall into a number of categories (such as extruded polystyrene (EXPS), polyisocyanurate, and rigid polyurethane), all of which rely on CFC-11 or CFC-12 as a blowing agent to form

Table 2.1. Ozone-depleting potential, 1986 production, and CFC-11 equivalent production levels for halogenated compounds

Chemical compound[a]	Ozone depleting potential [b]	1986 production[c] (10^6 lb)	1986 production equivalent (10^6 lb)
CFC-11	1.0	202	202
CFC-12	1.0	322	322
CFC-113	0.8	156[d]	125
CFC-114	1.0	9[d]	9
CFC-115	0.6	10[d]	6
HCFC-22	0.05	271	14
Halon 1211	3.0	6.3	19
Halon 1301	10.0	9[d]	90
Methyl chloroform	0.10[e]	648[f]	65

[a]See page xi for definitions of refrigerants.
[b]Montreal Protocol except where noted.
[c]Chemical Manufacturers Association except where noted.
[d]Private communication with Kent Anderson.
[e]*United Nations Environmental Programme*, UNEP/WG.172/2, Report of the Ad Hoc Working Group of Legal and Technical Experts, May 8, 1987.
[f]Halogenated Solvent Industry Alliance.

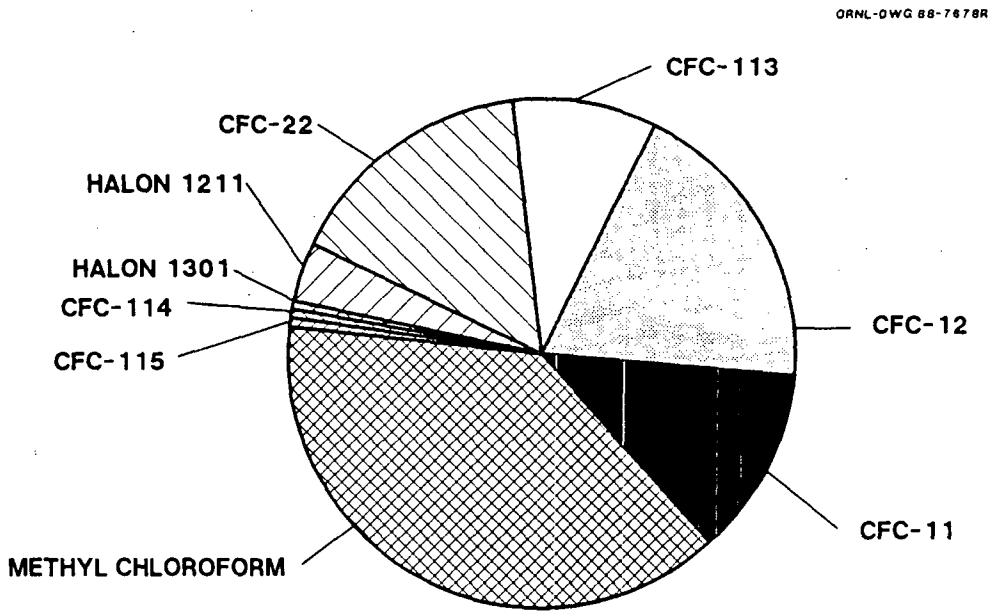

Fig. 2.1. 1986 U.S. production of ozone-depleting substances (1633 million lb).

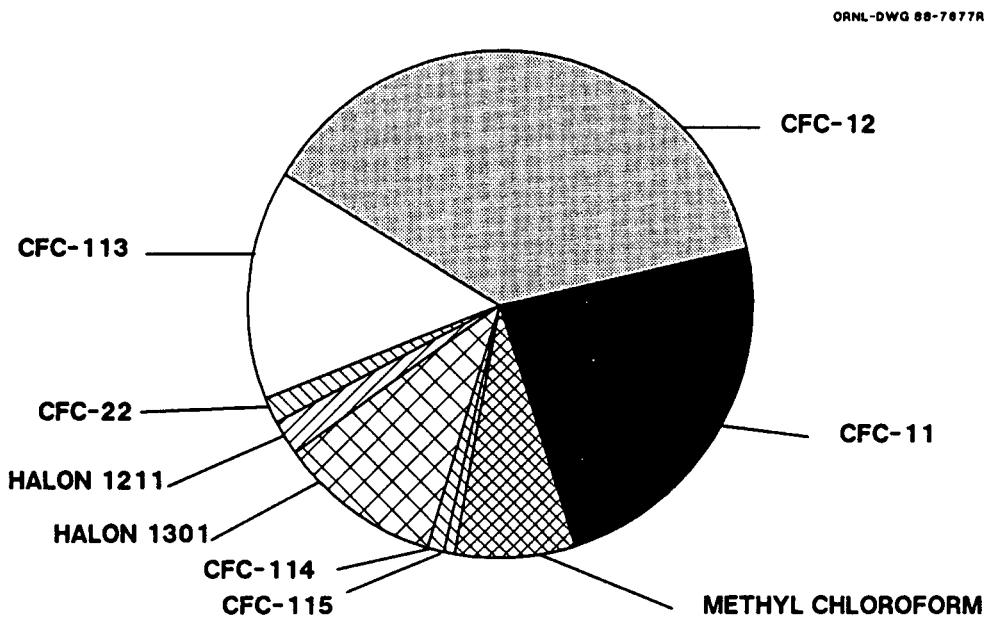

Fig. 2.2. Ozone-depleting potential of 1986 U.S. production of chlorine and bromine compounds (852 equivalent million lb).

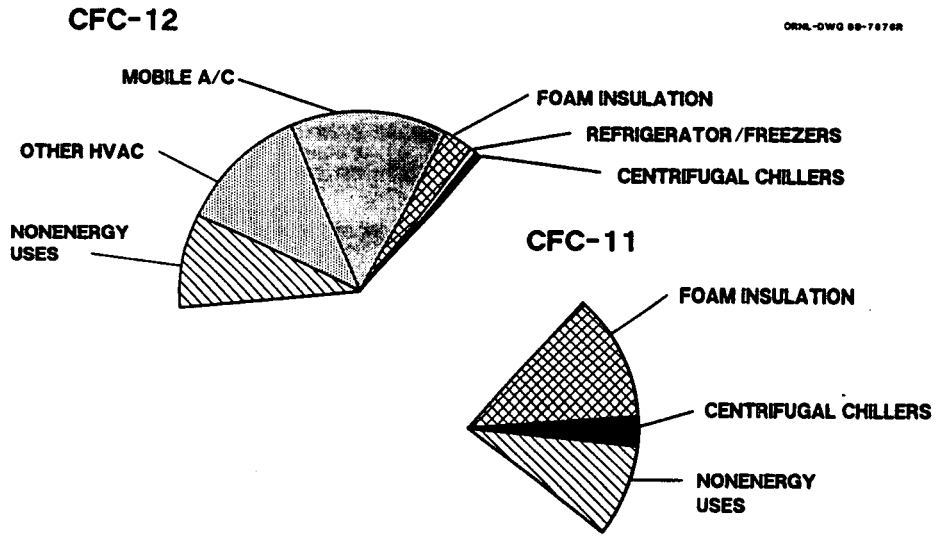

Fig. 2.3. Estimated distribution of 1986 U.S. production of CFC-11 and CFC-12 between specific applications in terms of ozone-depleting potential (524 equivalent million lb). *Source:* Koldfax from the Air-Conditioning and Refrigeration Institute, January 1987.

bubbles, or closed cells, in a plastic polymer. Part of their value as insulators comes from their low thermal conductivity. Mechanical refrigeration equipment ranges from the massive centrifugal chillers used to cool office buildings to a simple water fountain. This category also includes everyday products such as automobile air conditioners and household refrigerators and freezers.

3. DOMESTIC REFRIGERATORS/FREEZERS

3.1 INTRODUCTION

CFCs are used extensively in household refrigerators and freezers. These units typically use 8 to 14 oz. of CFC-12 in a vapor compression system using a reciprocating or rotary compressor, a natural convection or fan-cooled condenser, a capillary tube for expanding the refrigerant, and an air-to-refrigerant evaporator (D. Bivens, E. I. DuPont de Nemours and Company, Inc., private communication). Temperatures in the fresh food compartment are usually maintained between 32 and 39°F and the freezer compartment near 5°F; and CFC-12 is particularly suitable to these applications because it is nontoxic, nonflammable, and operates at moderate pressures at these temperatures.

In addition to the CFC-12 used in the refrigeration circuit, these appliances also use foam insulations that are formed using about 2 to 3 lb of CFC-11 as a blowing agent with a plastic polymer. A liquid mixture is poured or injected into the cavity between the inner and outer walls of the refrigerator shell. The heat of polymerization causes the CFC-11 to vaporize, creating a foam that fills all the voids in the shell where the foam hardens and provides both insulation and structural support to the cabinet. The gas captured within the closed cells of the foam provides a good barrier to heat flow into the cabinet if it has a low thermal conductivity, as does CFC-11. The refrigerator and freezer doors are typically insulated with fiberglass because of the difficulty of pouring foam throughout the cavity in the door. A refrigerator will typically contain three to four times as much CFC-11 in the insulation as it does CFC-12 in the refrigeration circuit.

3.2 ASSUMED CURRENT TECHNOLOGY

This analysis is based on a reference case refrigerator/freezer, an 18-ft^3, high-efficiency, frost-free model. Compressor and motor efficiencies are assumed to be 60% and 80%, respectively, and the resulting compressor energy efficiency ratio (EER) is 4.74 Btu/Wh [coefficient of performance (COP) of 1.39] for CFC-12 (see Appendix B for details of COP/EER calculations). A CFC-11 blown, foamed-in-place insulation with a thermal conductivity of 0.12 Btu•in./h•ft^2•°F (R-8.3/in.) is used throughout, except for the door, which is insulated with fiberglass (R-4.0/in.). This unit would have a "corrected" volume (a weighted combination of the fresh food space and freezer space) of about 20 ft^3. Auxiliary energy use for components such as fans and mullion heaters would average 30.6 W when the compressor is running[6] and an additional 80 kWh/year would be needed for the automatic defrosts (J. McMahon, Lawrence Berkeley Laboratory, private communication, November 1987). The analysis is done for a room temperature of 90°F, fresh food compartment temperature of 38°F, and a freezer temperature of 5°F (ref. 7). Although the average room temperature may be closer to 75°F, calculations are done at 90°F in standard test procedures to reflect the increased

loads due to opening the refrigerator and freezer doors. The estimated annual energy use for this refrigerator is 1020 kWh, which agrees quite well with the annual energy use of 1065 kWh/year estimated by the Association of Home Appliance Manufacturers (AHAM) for a typical 1986 model, 20-ft^3, automatic defrost refrigerator with a top-mounted freezer (Association of Home Appliance Manufacturers, Government Relations, private communication, July 6, 1987).

3.3 ALTERNATIVES CONSIDERED

3.3.1 Preferred Alternative

The preferred alternative to the current technology is to use HFC-134a and HCFC-141b in place of CFC-12 and CFC-11. It has been assumed that the same efficiency could be obtained by redesigning the compressor to use HFC-134a. Preliminary data indicate that theoretically the HFC-134a would have approximately the same compressor EER (4.75 Btu/Wh) as CFC-12 does under these conditions. Recent experimental work, however, indicates that this may be an overly optimistic assumption. Vineyard and Sand at ORNL have run comparative tests on a refrigerator/freezer using CFC-12 and HFC-134a at the same conditions and using the same lubricant. Their preliminary conclusion is that the daily energy use increases about 8.6% if HFC-134a is used as a drop-in substitute for CFC-12 (Edward Vineyard, ORNL, private communication). Further work is needed to determine the cause of this loss of efficiency and what changes in the design of the capillary tube and compressor are possible to alleviate it.

It must be recognized that any assumptions about the performance of a substitute refrigerant in a refrigerator designed to use that compound are highly speculative. It might be that performance would be no worse than the 8.6% energy-use increase mentioned above, although that figure does not account for any impacts on long-term reliability. The analysis done here assumes a 5% loss from the ideal cycle COP calculations, which admittedly is an arbitrary judgment, since much work needs to be done in lubricants and component design before more accurate assumptions can be made.

HCFC-141b can be used as a foam-blowing agent, although it has a higher thermal conductivity than does CFC-11 and foams blown with it do not insulate as well as do foams blown with CFC-11. This analysis has been done using a K-factor of 0.126 Btu•in./h•ft^2•°F (R-7.9/in.) for the HCFC-141b blown foam and an estimated annual energy use for the refrigerator/freezer of 1085 kWh.

3.3.2 Fallback Position

If HFC-134a and HCFC-141b do not become available for refrigerators, the fallback position is to use HCFC-22 for the working fluid and to insulate the cabinet with EPS. The EPS insulation has a thermal conductivity of 0.20 Btu•in./h•ft^2•°F (R-5.0/in.). All the other assumptions are the same for the fallback position and the current technology but recognizing that the assumed compressor efficiency of 60% may be difficult to attain for this application. Refrigerators currently use small compressors, and a refrigerator designed to use HCFC-22 would have an even smaller compressor than a CFC-12 system because the same refrigerating capacity can be provided by circulating 30% less HCFC-22 than CFC-12. As the size of the components diminishes it becomes increasingly difficult to build high-efficiency compressors; consequently, an HCFC-22

compressor would probably not be as efficient as a compressor designed for CFC-12, and the estimate of annual energy use (1345 kWh) for this refrigerator is therefore conservative.

3.3.3 Worst-Case Alternative

The worst-case scenario for refrigerator/freezers combines two possibilities that are unlikely, but which cannot be ruled out entirely. First, it assumes that HFC-134a does not become commercially available and HCFC-22 cannot be used because of inadequate supplies or to tighter regulation of chlorinated compounds. In that case, there are few attractive alternatives; in fact, ammonia would be the best refrigerant remaining, but there are many engineering and social obstacles to its use in home appliances. The second assumption is that EPS may not be practical for use in mass production (e.g., it is easily crushed and difficult to work with on an assembly line). In this case, fiberglass batts would be used for the insulation, and it has been assumed that the thermal conductivity of fiberglass batts is 0.25 Btu•in./h•ft^2•°F (R-4.0/in.). The EER for the refrigerator using ammonia is computed at the same operating conditions as for the base case using CFC-12, but the high-suction gas superheat may unfairly penalize the performance of the ammonia-based system. The estimated annual energy use for this refrigerator is 1685 kWh.

3.3.4 Advanced Technology Options

There are several possible options in refrigeration and insulation that may become available for use in appliances. Considered here is a Stirling cycle refrigeration system that uses helium as its working fluid in place of the conventional vapor compression cycle using CFC-12. It is assumed that with sufficient development these machines could achieve 50% of the theoretical (Carnot) efficiency, including all mechanical and electrical losses. This represents a significant improvement over the efficiency of existing Stirling equipment, which is designed primarily for cryogenic applications and has efficiencies around 18 to 25% of Carnot,[8] (also, S. Malaker, private communication, November 1987) and such an improvement is not altogether impossible. The assumed base case using CFC-12 in refrigerator/freezers operates at 41% of the Carnot efficiency.

The available options for substitute insulation are much closer to being available for use in consumer products. The substitute analyzed for this analysis is a vacuum-insulated panel with a thermal conductivity of 0.05 Btu•in./h•ft^2•°F, which is used to build a wall having R-20/in.[9] The estimated annual energy use of this refrigerator is 650 kWh.

3.4 CALCULATIONAL PROCEDURE

The efficiency of a refrigerator is commonly measured in terms of its energy use in kilowatt-hours per day. Arthur D. Little, Inc., developed a correlation for estimating the daily energy use of a refrigerator based on the heat that leaks into the cabinet, the internal refrigeration loads, and the compressor EER.[6] This correlation is shown in Eq. (3.1), which is used to estimate the daily energy use of the current technology refrigerator and each of the four alternatives.

$$kWh/day = 0.024 * (Q_s/(Q_r - I)) * (Q_r/EER + E) + W_D/365 \quad (3.1)$$

where

Q_s = steady state cabinet heat load (Btu/h),
Q_r = refrigeration unit cooling capacity (Btu/h),
I = internal heat load accompanying refrigeration unit run time (Btu/h),
EER = compressor energy efficiency ratio (Btu/Wh),
E = auxiliary energy, fans, heaters, etc. (W),
W_D = annual energy use for defrost operation (kWh).

The first term in Eq. (3.1) converts hourly energy use in watts to a daily rate in kilowatts; the second term, the cabinet heat load divided by the "excess" capacity, is the fraction run time; the third term is the steady state, hourly energy use; and the final term adds an average energy use for defrost. Four of these variables are set to values for an 18-ft^3 automatic defrost refrigerator/freezer,[6] (also, J. McMahon, Lawrence Berkeley Laboratory, private communication, November 1987) and the other two variables are calculated.

Constants for daily energy use calculations for an automatic defrost refrigerator/freezer

Variable	Value
Refrigeration unit cooling capacity	675 Btu/h
Internal heat load accompanying refrigeration unit run time	200 Btu/h
Auxiliary energy, fans, heaters, etc.	30.6 W
Annual energy use for defrost operation	80 kWh

The cabinet heat load in Eq. (3.1), Q_s, and the energy efficiency ratio, EER, are calculated based on the type of insulation and the operating fluid, respectively. The cabinet heat load is computed for each type of insulation based on the dimensions of the refrigerator cabinet; wall thicknesses; insulation thermal conductivity; the temperatures in the room, the fresh-food compartment, and the freezer compartment; and the heat gains through each door gasket. These data are listed in Table 3.1. The computer cabinet loads, Q_s, are listed in Table 3.2.

The compressor cycle efficiencies, EER in Eq. (3.1), are computed using standard tables of refrigerant properties. The EER for CFC-12, 4.74 Btu/Wh, agrees well with manufacturers' data for new refrigerators.[10] The results for HFC-134a are based on tables of preliminary data from Allied-Signal (Ted Atwood, Allied-Signal, Inc., 1987, private communication). These results are also listed in Table 3.2.

Table 3.1. Refrigerator/freezer cabinet heat loss data

	Refrigerator	Freezer
Cabinet dimensions, in.		
Height	50.75	17.00
Width	29.00	29.00
Depth	31.50	31.50
Thickness of insulation, in.		
Sides	2.0	2.5
Top and bottom	2.0	2.0
Door	1.5	1.5
Back	2.0	2.0
Door gasket heat gain, Btu/h	30.6	29.6
Cabinet temperature, °F	38.0	5.0

Table 3.2. Analysis of alternatives for refrigerator/freezers

	Current practice[a]	Preferred alternative[a]	Fallback position[a]	Worst-case alternative	Advanced technology option
Refrigeration:					
working fluid	CFC-12	HFC-134a	HCFC-22	Ammonia	Helium
cycle efficiency					
EER,[b] Btu/Wh	4.74	4.51	4.43	3.78	5.75
COP[c]	1.39	1.32	1.30	1.11	1.69
Insulation:					
material	CFC-11 foam	HCFC-123 foam	EPS	Fiber-glass	Vacuum panels
K-factor, Btu•in./h•ft²•°F	0.12	0.126	0.20	0.25	0.05
cabinet heat loss Q_s, Btu/h	295	300	375	415	210
Energy use:					
daily, kWh	2.80	2.97	3.68	4.62	1.79
annual, kWh	1,020	1,085	1,345	1,685	650

[a]See page xi for definitions of refrigerants.
[b]EER = energy efficiency ratio.
[c]COP = coefficient of performance.

3.5 NATIONAL ENERGY IMPACT

The national energy penalty associated with each of the substitute technologies is listed in Table 3.3. These data are based on the difference between the annual energy use for 113 million refrigerators.[11] Values for electrical energy use are converted to primary fuel based on 11,500 Btu/kWh (10,300 Btu of primary fuel required to generate 1 kWh of electricity at the power plant and a transmission efficiency of 90%). The actual impact then, based on fossil fuels, is given in the last row of Table 3.3. The negative numbers in this table indicate that there would be an energy savings, rather than a penalty, if the advanced technology can be developed and used.

The use of the two new compounds, HFC-134a and HCFC-141b, would result in a very small change in energy use, 0.08 quads/year nationwide; but a severe impact could occur if either of these chemicals does not become available. The fallback position of HCFC-22 and EPS represents a 30% increase in energy use for refrigeration. The severity of the worst-case scenario, 0.86 quads/year, and the opportunities for energy savings presented by the advanced technology show the importance of continued R&D in this field.

3.6 COMMENTS AND CAVEATS

No effort has been made to address the problems facing the appliance industry in its efforts to abide by the National Appliance Energy Conservation Act of 1987 (NAECA). This statute, which was signed into law in the spring of 1987, mandates a 40% decrease in the energy use of most domestic appliances. A rigorous analysis, including industry response to the energy efficiency goals, would require looking at a broad range of refrigerators and freezers rather than doing an abbreviated analysis for a typical unit. The depth of that work is beyond the scope of this study; but, to at least acknowledge it, this analysis has been based on a high-efficiency refrigerator rather than a mid-line one.

Other details outside the focus of this report have been omitted in an effort to keep the evaluation of each application of CFC-11 and/or CFC-12 simple and straightforward. For example, modern refrigerators contain mullion heaters to keep the external surface of the unit above the dew point of the air, and poorer insulations would lead to lower surface temperatures and a need for higher mullion heating values. Our calculations do not take this into account. Additionally, this report does not address the problems associated with using either HCFC-22 or ammonia in domestic refrigerators. Both compounds would have significantly higher compressor discharge temperatures, which may require major changes in condenser design and perhaps additional fan power. The higher temperatures and pressures would also affect the compressor durability. These considerations are in addition to those already mentioned about assuming that a compressor for HCFC-22 could achieve the same efficiency as a compressor for CFC-12.

The commonly used refrigerants are so safe and environmentally acceptable, except for their impact on stratospheric ozone, that it is hard to conceive of using ammonia as a viable alternative. Ammonia is much more difficult to use and much more dangerous to have in a consumer appliance than CFC-12. Ammonia cannot be used with copper in the heat exchanger tubes or in the motor windings of a hermetic compressor. However, it has been used for refrigerators in the past and could conceivably be used again in the future if HFC-134a and HCFC-22 were unavailable. Nevertheless, even if all the problems associated with using ammonia could be solved, there would still be a severe energy impact.

Table 3.3. National energy impact of alternatives for domestic refrigerator/freezers

Energy penalty	Preferred alternative	Fallback position	Worst-case alternative	Advanced technology option
Electrical energy, billion kWh/year	7.3	37.0	75.1	-40.0
Primary energy, quads/year	0.08	0.42	0.86	-0.48

There are many other alternatives that have not been treated here. High-efficiency, gas-fired absorption refrigerators could be developed which would save as much or more energy than the advanced Stirling cycle refrigeration. Similarly, superinsulated cabinets that go beyond the assumptions for the vacuum-insulated panels are possible. This report does not include some of the obvious possibilities for improving the refrigerator (e.g., using foam insulation in the door, making all the walls thicker) simply to avoid trying to justify "comparable" alternatives. For example, making the walls 50% thicker with expanded polystyrene insulation gives about the same cabinet heat gain as the base case (with CFC-11 blown foam), but the usable volume is reduced from 20 ft^3 to 15 ft^3. The cases that are included bracket the energy penalties (and potential gains) of most of the possible alternatives.

Although HFC-134a is used as the preferred alternative to CFC-12 in this analysis, there are other compounds, or blends of compounds, which could also serve as near drop-in substitutes. A blend of HCFC-22 and HCFC-142b is frequently mentioned as having thermodynamic properties very similar to those of CFC-12 and it could be used in some applications. The energy penalties of these other possible substitutes are thought to be about the same as those computed for HFC-134a.

4. HOUSEHOLD FREEZERS

4.1 INTRODUCTION

The analysis for household freezers is very similar to that done for refrigerator/freezers. Data values are given below and the results are given in Tables 4.1 and 4.2. The calculations here are for an 18-ft^3 manual defrost model and are essentially the same as the computations for the refrigerator/freezers. The national energy impact is based on 32 million household freezers.[11]

Constants for daily energy use calculations
for a manual defrost household freezer

Variable	Value
Refrigeration unit cooling capacity	450 Btu/h
Internal heat load accompanying refrigeration unit run time	0 Btu/h
Auxiliary energy, fans, heaters, etc.	0 W
Annual energy use for defrost operation	0 kWh

The same comments and caveats that follow the discussion of refrigerator/freezers also apply for household freezers. The use of HFC-134a and HCFC-141b provides a solution to removing CFC-12 and CFC-11 from freezers. The fallback and worst-case possibilities again represent 30 to 50% increases in energy use and major design changes by the manufacturers.

Table 4.1. Analysis of alternatives for household freezers

	Current practice[a]	Preferred alternative[a]	Fallback position[a]	Worst-case alternative	Advanced technology option
Refrigeration:					
working fluid	CFC-12	HFC-134a	HCFC-22	Ammonia	Helium
cycle efficiency					
EER,[b] Btu/Wh	4.74	4.51	4.43	3.78	5.75
COP[c]	1.39	1.32	1.30	1.11	1.69
Insulation:					
material	CFC-11 foam	HCFC-123 foam	EPS	Fiber-glass	Vacuum panels
K-factor, Btu•in./h•ft^2•°F	0.12	0.126	0.20	0.25	0.05
cabinet heat loss Q_s, Btu/h	360	370	460	510	255
Energy use:					
daily, kWh	1.82	1.96	2.49	3.25	1.07
annual, kWh	665	715	910	1,185	390

[a]See page xi for definitions of refrigerants.
[b]EER = energy efficiency ratio.
[c]COP = coefficient of performance.

Table 4.2. National energy impact of alternatives for domestic freezers

Energy penalty	Preferred alternative	Fallback position	Worst-case alternative	Advanced technology option
Electrical energy, billion kWh/year	1.6	7.8	16.6	-8.8
Primary energy, quads/year	0.02	0.09	0.19	-0.10

5. AUTOMOBILE AIR CONDITIONING

5.1 INTRODUCTION

This section estimates the energy impact of CFC regulations on the entire national transportation fleet by analyzing alternatives for mobile air conditioning (A/C) for passenger cars and light trucks. CFC-12 has been the refrigerant of choice for these air conditioners since their introduction in the 1930s. About 75% of the cars on the road and 85% of all new cars and light trucks sold in the United States are air conditioned. In fact, approximately 40% of all the CFC-12 produced in the United States in 1986 was used in mobile air conditioning. The typical air conditioner for a full-sized car has the same cooling capacity as an air conditioner for a 2000-ft^2 house in Atlanta. This high capacity is needed to bring the inside temperature down quickly on a hot day and to provide adequate cooling while idling or in stop and go traffic. It is also needed for highway driving on hot, humid days when the comfort controls are set to bring in outside air.

CFC-12 has a mix of characteristics that make it uniquely suited for this application. It provides a good compromise between maximum pressure at high temperature and minimum suction volume flow rate with low compressor discharge temperatures. It also has low permeability through the inexpensive hoses, O-rings, and other seal materials; it is inexpensive, nonflammable, and nontoxic (when reasonable handling procedures are followed). CFC-12 is highly stable over the full range of operating temperatures and in the presence of oil and materials used for the compressor and other system components.

5.2 ASSUMED CURRENT TECHNOLOGY

Current practice in the automobile industry is to use CFC-12 in a vapor compression refrigeration system. The system consists of a compressor mounted on the engine block, a condenser located near the radiator, an evaporator inside the passenger compartment, an orifice for expansion, and both flexible and rigid refrigerant lines connecting the various components. The compressor is driven by a belt connected to the drive shaft.

The size, efficiency, and weight of the components are important considerations in designing and building the system. The analyses here are based on a 65% compressor efficiency, which results in a compressor COP of 2.35 for the CFC-12 base case (see Appendix B for details of COP calculations). General Motors (GM) estimates that air-conditioning increases fuel use by 20 gal of gasoline for every 10,000 miles driven; this includes the time with and without the air conditioner turned on[12] (J. Dieckmann, Arthur D. Little, private communication, November 1987). Any reductions in cycle COP for the alternatives result in a proportional increase in fuel use.

Industry efforts to improve mileage ratings have led to improvements in component efficiencies and reductions in weight. Any alternatives to CFC-12 that

increase vehicle weight will also impact energy use. GM and others have estimated that 8 to 10 gal of fuel are also required for each additional 100 lb of vehicle weight per 10,000 miles driven[13,14] (G. Stofflet, General Motors, private communication, July 1988).

5.3 ALTERNATIVES CONSIDERED

There is no substitute refrigerant, either commercially available or under development, with as desirable a mix of properties for automobile air-conditioning as CFC-12. There are several acceptable or potentially acceptable alternative vapor compression cycle refrigerants for use in place of CFC-12 that have most of these desirable characteristics. These include HFC-134a, HCFC-22, propane, and mixtures of HCFC-22 and CFC-142b. Other alternatives to the current use of CFC-12 in vapor compression systems are Stirling cycle refrigeration, and reverse Brayton (air) cycle.

5.3.1 Preferred Alternative

HFC-134a is by far the preferred choice for replacing CFC-12 in automotive air conditioners. Although it is not a direct, drop-in, substitute, HFC-134a is attractive because it approximates the vapor pressure-temperature curve of CFC-12 closely and duplicates most of its other desirable properties. HFC-134a appears to be an acceptable substitute with respect to the basic performance characteristics, chemical compatibility, permeability through hoses, and flammability. The major uncertainties surrounding HFC-134a are the long-term toxicity tests and development of a synthetic lubricant that is miscible with the refrigerant throughout the temperature range for mobile A/C. An air conditioner with HFC-134a is not as efficient as one using CFC-12, as discussed in Sect. 3, and these calculations include a 5% decrease in cycle COP to reflect that.

5.3.2 Fallback Position

The distant second choice of the automakers for a substitute refrigerant is HCFC-22. The major problem surrounding HCFC-22 in this application is its higher condensing pressure (400 psia compared with 250 psia), which requires two important design changes. First, the entire refrigeration circuit needs to be heavier and "tighter" to sustain the pressures and keep down leakage. This will require thicker-walled tubing, particularly in the condenser, resulting in higher materials and labor costs and increased vehicle weight. The compressor will need to be redesigned both to handle HCFC-22 and to keep emissions around the shaft seal low. The higher pressures will also affect compressor durability

The second problem resulting from HCFC-22 is its permeation through the flexible hoses. Flexible connections are necessary because of the vibrations between the compressor mounted on the engine block and the heat exchangers mounted on the body of the vehicle. The hose material currently used is relatively impervious to CFC-12, but HCFC-22 permeates through the hoses at a much higher rate because it is a smaller molecule. This is a major problem because at the higher pressures HCFC-22 leaks through the hose material at about six times the CFC-12 rate and would result in the system needing to be recharged every six months. The development of new materials for the hoses represents another increase in cost and perhaps an increase in weight. ICI, an international chemical

manufacturer, has been working with the automobile industry to investigate alternative technologies for mobile A/C and they estimate that it will cost $1 billion to retool to produce air conditioners using HCFC-22.[15]

5.3.3 Worst-Case Scenario

There are major problems in developing mobile A/C systems for the worst-case scenario in which HFC-134a and HCFC-22 are not available as substitutes for CFC-12. The thermodynamically acceptable substitutes (e.g., ammonia, propane, sulfur dioxide) are completely unacceptable for use in an enclosed passenger compartment. Propane is considered as the refrigerant here, in spite of its problems with flammability, because it has about the same compressor COP as ammonia (at these conditions) but has a much lower operating pressure than does ammonia (340 psia vs 430 psia). This is about 35% higher than the condensing pressure for CFC-12; as a result, stronger, heavier components would be needed, but the changes are not as great as they might otherwise be. Without addressing the flammability problem directly, it is acknowledged that propane could not be allowed to pass through the fire wall and into the passenger compartment. A secondary heat exchanger would be needed, and brine or ethylene glycol would be used to transfer heat from the passenger compartment, through the fire wall, to the propane in the engine compartment. It is assumed that this secondary heat exchanger would reduce the cycle efficiency by 10% and that the heavier condenser, tubing, and secondary heat exchanger would add 12 lbs to the weight of the air conditioner.

5.3.4 Advanced Technology Alternatives

There are a number of long range opportunities for research and development of advanced mobile air conditioning systems. Research on an automobile air conditioner based on hydrogen absorption/desorption on a metal sponge is being performed at Carnegie Mellon University, and an advanced thermoelectric cooling system may also be developed. An automobile air conditioner based on the Stirling cycle is also a possibility and is considered in this report. It is assumed that an advanced Stirling cycle refrigeration system could be developed that achieves 50% of Carnot efficiency.

5.4 CALCULATIONAL PROCEDURE

The energy penalties for each of the alternative technologies are estimated by computing two separate components, one the result of changes in the thermodynamic cycle efficiency and the other due to increases in the weight of the air conditioner. The computed COPs for CFC-12, HFC-134a, HCFC-22, propane, and the Stirling cycle (50% of Carnot) are 2.35, 2.19, 2.25, 2.01, and 2.27 respectively. Consequently, HFC-134a would require 7% more energy than CFC-12 (2.35/2.19), HCFC-22 4% more, propane 17% more, and the Stirling cycle 3% more. These data are summarized in Table 5.1.

Table 5.1. Energy impact for mobile air conditioning in passenger vehicles

	Current practice[a]	Preferred alternative[a]	Fallback position[a]	Worst-case alternative	Advanced technology option
Working fluid	CFC-12	HFC-134a	HCFC-22	Propane	Helium
Cycle COP[b]	2.35	2.19	2.25	2.01	2.27
Weight of A/C,[c] lbs	25	25	37	37	31
Fuel use for A/C, gal/10,000 miles	20.0	21.5	20.8	23.4	20.6
Fuel use for weight of A/C, gal/10,000 miles	2.5	2.5	3.7	3.7	3.1
Combined fuel use, gal/10,000 miles	22.5	24.0	24.5	27.1	23.7

[a]See page xi for definitions of refrigerants.
[b]COP = coefficient of performance.
[c]A/C = air conditioning.

Automobile air conditioners weigh about 25 lb (J. Dieckmann, Arthur D. Little, private communication, November 1987). The substitution of HFC-134a for CFC-12 in the preferred alternative case is unlikely to make a significant change in this weight. The use of HCFC-22, though, would require substantially heavier components, as pointed out earlier, and Arthur D. Little estimated that total weight would increase 25 to 50% (J. Dieckmann, Arthur D. Little, private communication, November 1987). The fallback option, then, would result in a weight of at most 37 lb. In the worst-case scenario, heavier components are also required because of the pressure increases relative to CFC-12 (though they are not as drastic as with HCFC-22) and the addition of a secondary heat exchanger. These changes also represent a 50% increase in total weight. Finally, it is assumed that the advanced technology, Stirling cycle air conditioner would also weigh somewhat more than current systems; a 6-lb increase is used in these calculations. These data are also in Table 5.1. Fuel use due to the weight of the air conditioner is derived from the GM estimate of 10 gal/10,000 miles for each 100 lb of increased vehicle weight.

5.5 NATIONAL ENERGY IMPACT

The national energy impact of these four alternatives is given in Table 5.2. In each case, the combined fuel use for the alternative air-conditioning system

(given in the last row of Table 5.1) is multiplied by the number of vehicles on the road. These results are for a nationwide fleet of 170 million passenger cars and light trucks,[16] with the assumptions that 85% of them are air-conditioned and each vehicle is used an average of 10,000 miles/year. The conversion from gallons of gasoline to quads of energy is based on 190.4 million bbl/quad and 42 gal/bbl.

These results are small because the increase in fuel use per vehicle in Table 5.1 is small. Even the worst case (an increase of 4.6 gal/10,000 miles) represents just a 0.9 to 1.6% change based on mileages of 20 to 35 miles/gal. Consequently, the numbers in Table 5.2 are not particularly large, either in terms of gallons of gasoline or in quads of energy. The problems facing this industry will be ones of design, retooling, passenger comfort and safety, and training the mechanics servicing the units in the field, not problems of severe impact on vehicle mileage and efficiency.

Table 5.2. National energy impact of chlorofluorocarbon restrictions for mobile air conditioning

Energy penalty	Preferred alternative	Fallback position	Worst-case alternative	Advanced technology option
Million gallons of gasoline/year	217	289	665	173
Quads/year	0.03	0.04	0.08	0.02

5.6 COMMENTS AND CAVEATS

A number of options being promoted as alternatives to CFC-12 air-conditioning have not been considered here. Some, such as the use of azeotropic and nonazeotropic mixtures of refrigerants that approximate the properties of CFC-12 could be used if HFC-134a does not become available. Their impact on energy use would be as minimal as that for the use of HFC-134a. Other possibilities (e.g., ammonia, HCFC-22 with hermetic compressors) would have different advantages and disadvantages than the options considered here, but the energy impacts would still fall into this range. Design changes that would significantly reduce the amount of refrigerant or reduce the cooling loads are serious possibilities in adapting to CFC restrictions. This is particularly true for propane or ammonia, where there is reason to keep the refrigerant inventory as low as possible.

This study acknowledges but does not investigate the problems facing the automakers in the aftermarket or service industry attributable to CFC regulation,

not because they are insignificant but because there are no quantifiable energy penalties associated with them. Future shortages of CFC-12 will create great difficulties in maintaining and servicing the millions of automobile air conditioners currently in use, and these units could be rendered inoperable if there were a lack of refrigerants. This puts increased significance on finding a substitute compound that is as similar to CFC-12 as possible so the cost of retro-fitting and maintaining equipment is acceptable to the consumers.

6. RETAIL REFRIGERATION

6.1 INTRODUCTION

It is difficult to generalize about the use of CFCs in retail store applications because this is such a broad area. It includes such diverse equipment as refrigerated display cases in supermarkets, walk-in coolers and freezers in restaurants, refrigerators for blood banks, and pharmaceutical cabinets. However, this type of equipment can be grouped into three categories, and a qualitative assessment of the energy impact can be made for each group:

- Low-temperature applications, -10° to 20°F, generally use HCFC-502 and will be affected by regulations on CFCs. HCFC-502, an azeotropic mixture of HCFC-22 and CFC-115, has an ozone depletion factor of 0.32. CFC-115 is among the CFCs that are under production restrictions; hence, so HCFC-502 may become scarce, particularly after 1998 when production has to decrease by 50% from the 1986 levels.

- Medium-temperature coolers, 28°F to 45°F, have been manufactured using CFC-12, but current trends in the industry are toward using HCFC-502, partly because of the increasing use of larger display cases with "remote" compressors and condensers. HCFC-502 is chosen for these systems so that store management only needs to handle a single refrigerant. Higher energy costs have also accelerated this trend because HCFC-502 is actually more efficient in this temperature range than CFC-12.[17,18] Historically, CFC-12 has been used because it had a lower initial cost than HCFC-502.

- High-temperature applications, 50°F and above, have primarily used CFC-12, although some equipment may use HCFC-22. Compressors for both CFC-12 and HCFC-22 are manufactured for this temperature range application, and the HCFC-22 compressors are in fact more efficient than those for CFC-12.

Display cases and commercial refrigerators and freezers use blown-foam insulations manufactured with CFC-11 or CFC-12. Although any regulations on CFCs will limit the availability of these insulations, there probably would not be a significant impact on national energy use, primarily because only a small part of the equipment load is due to the losses through the cabinet. Apparently, 80 to 95% of the open display case heat gains are through the display opening.[19] Other types of display cases or equipment may not show such high heat gains, and it is presumed that any increase in heat gains due to higher thermal conductivity insulations could be offset with thicker walls.

6.2 ASSUMED CURRENT TECHNOLOGY

A number of very gross assumptions have been made for this analysis because it is extremely difficult to get data on the number of units in use or their efficiencies. The resulting estimates of national energy impact are very small, however, so even very large percentage errors in the assumptions still lead to relatively small absolute changes in the energy impacts. The analysis in this study is performed only for low- and medium-temperature grocery display cases because HCFC-22 can be substituted for CFC-12 in high-temperature cases and higher compressor efficiencies will compensate for the slightly lower cycle efficiency.

Both types of display cases are assumed to have vapor compression circuits using HCFC-502, electrically driven reciprocating hermetic compressors, compression efficiencies of 65%, and motor efficiencies of 80%. These lead to refrigeration EERs of 5.20 Btu/Wh for the low temperature and 5.81 Btu/Wh for the medium-temperature display cases. The low-temperature case is assumed to be a 12 ft long reach-in freezer (open top, enclosed sides). The design load of this unit is 4500 Btu/h.[19] The medium-temperature display case is also 12 ft long but is an upright model with several shelves at or near eye level. The design load of this unit is 18,500 Btu/h.[19] In each case it has been assumed that the refrigeration systems run 75% of the time (45 min/h).

6.3 ALTERNATIVES CONSIDERED

6.3.1 Preferred Alternative

The preferred response by this industry is to continue to use HCFC-502 and HCFC-22 for low- and medium-temperature applications, but the complete phaseout of CFCs would mean that only HCFC-22 could be used (HCFC-502 contains CFC-115, which is being phased out of production). Although it could be possible to use HFC-134a, it is not an ideal substitute for all low-temperature applications. CFC-12 was used for low-temperature refrigeration at one time but was dropped in favor of HCFC-502 in the mid-1960s. CFC-12 operates at subatmospheric pressures at very low evaporating temperatures and consequently was not very efficient (C. Laverrenz, Tyler Refrigeration, private communication, July 1988). The same would be true for HFC-134a, because its thermodynamic properties are so similar to those of CFC-12. It is more likely that HCFC-22 would be used for both low- and medium-temperature refrigeration. The compressor EERs (including compression and motor efficiencies) for HCFC-22 are 5.43 Btu/Wh and 5.93 Btu/Wh for the low- and medium-temperature display cases respectively.

6.3.2 Fallback Position

The fallback position is also assumed to be to use HCFC-22 as the refrigerant for both the low- and medium-temperature display cases. These would have EERs of 5.43 and 5.93 Btu/Wh respectively. Both EERs for HCFC-22 are higher than the corresponding efficiencies for the current technology, which raises the question of why HCFC-22 is not used today instead of HCFC-502. HCFC-22 was used in the past but was replaced by HCFC-502 because HCFC-22 has problems with its high discharge temperatures and poor ability to mix with lubricating oils in this low-temperature application (C. Laverrenz, Tyler

Refrigeration, private communication, July 1988). HCFC-22 would also require two-stage compression for low temperatures, and the durability of the compressor might be less than it is for current equipment (D. Bivens, E.I. DuPont de Nemours and Company, Inc., private communication).

6.3.3 Worst-Case Scenario

The worst-case scenario is assumed to be to use ammonia as the refrigerant in both types of display cases. The EERs of these systems would be 5.74 and 6.86 Btu/Wh.

6.3.4 Advanced Technology Options

The advanced technology alternative to CFC-12 refrigeration for display cases is assumed to be a Stirling cycle unit which operates at 50% of Carnot efficiency. These would have EERs of 7.10 and 7.44 Btu/Wh for the low- and medium-temperature units respectively.

The five cases considered here are summarized in Table 6.1.

6.4 CALCULATIONAL PROCEDURE, DAILY ENERGY USE

The daily refrigeration load for each type of display case is determined by multiplying the hourly load (i.e., 4500 Btu/h or 18,500 Btu/h) by the percent on time (75%) and by 24 h/d. The daily energy use is then found by dividing the daily load by the EER. As mentioned above, the EER is the cycle efficiency for the refrigerant used multiplied by the compressor efficiency (65%) and the motor efficiency (80%). No effort is made to account for the energy used by fans or the defrost cycle; these are likely to be very similar for each of the alternative refrigerants considered, so the omission is not important when the differences, or energy penalties, are considered.

6.5 NATIONAL ENERGY IMPACT

There are 160,000 "food stores" and 39,000 "supermarkets" nationwide.[20] It is assumed that the food stores are fairly small and would have only two low-temperature and two medium-temperature display cases. It is assumed that each of the supermarkets would have ten display cases of each type; this amounts to 710,000 low-temperature and 710,000 medium-temperature display cases nationwide. The national energy impact for each application, then, is the product of the number of display cases with the difference between the annual energy use for the alternative technology (e.g. HFC-134a, HCFC-22, ammonia) and that for the current technology. The impact for retail refrigeration is the sum of the energy penalty for low temperature and that for medium temperature display cases. These results are listed in Table 6.2.

Table 6.1. Analysis of alternatives for refrigerated display cases

	Current practice[a]	Preferred alternative[a]	Fallback position[a]	Worst-case alternative	Advanced technology option
Refrigeration: working fluid	HCFC-502	HCFC-22	HCFC-22	Ammonia	Helium
		Low temperature			
EER,[b] Btu/Wh	5.20	5.43	5.43	5.74	7.10
energy use:					
daily, kWh	15.6	14.9	14.9	14.1	11.4
annual, kWh	5,685	5,445	5,445	5,150	4,165
		Medium temperature			
EER,[b] Btu/Wh	5.81	5.93	5.93	6.86	7.44
energy use:					
daily, kWh	57.3	56.2	56.2	44.8	44.8
annual, kWh	20,920	20,505	20,505	16,340	16,340

[a]See page xi for definitions of refrigerants.
[b]EER = energy efficiency ratio.

Table 6.2. National energy impact of chlorofluorocarbon restrictions for retail refrigeration

Energy penalty	Preferred alternative	Fallback position	Worst-case alternative	Advanced technology option
Million kWh/year	-470	-470	-2,650	-4,335
Quads/year	-0.01	-0.01	-0.03	-0.05

6.6 COMMENTS AND CAVEATS

Once again, the negative numbers indicate that there would be an energy savings rather than an energy penalty if this alternative can be developed and implemented. It must be emphasized that many technical and regulatory problems have been ignored when presenting these alternatives and that there is a great deal of uncertainty in the assumptions used for them. Ammonia, for instance, is a more efficient refrigerant for these applications, but it may not be acceptable for use in retail stores. The problems of using HCFC-22 in these applications have already been mentioned.

The analysis has been done as carefully as possible using the available data but the estimates can certainly be in error by 50 to 100% or more. Even though there is a relatively large degree of uncertainty in the results, the magnitude of the energy impacts is so small that this application does not warrant a more detailed analysis.

Finally, although problems with insulation have not been dealt with here, they do present a problem for the manufacturers and users of retail refrigeration-equipment. Although the changes in refrigeration load resulting from alternative insulations may be a small percentage of the total load, the impacts or effects on cabinet or exterior skin temperatures cannot be ignored by the engineers designing the equipment. Any reduction in R-value per inch will need to be compensated for with thicker layers of insulation to avoid sweating or condensation on the exterior walls. This will in turn result in higher costs and either reduced usable volume or loss in floor space.[20]

7. BEVERAGE VENDING MACHINES

7.1 INTRODUCTION

There are between two and three million vending machines in the United States that use CFCs in their refrigeration systems and insulations,[21,22] primarily these are soft drink machines. Although generally similar to a household refrigerator with refrigeration systems using CFC-12 and cabinet insulation with CFC-11 blown foam, these machines have very large internal loads when they are refilled and must operate over a very wide range of conditions. At steady-state operation, a machine that holds 100 cans of soft drinks would have cabinet losses of around 300 Btu/h and a 400-can-capacity machine 1000 Btu/h.[23,24]

7.2 ASSUMED CURRENT TECHNOLOGY

It is assumed that the current technology for this application is a vapor compression refrigeration system using CFC-12 and a cabinet that uses CFC-11 foamed-in-place insulation. The compressor is comparable to one developed for this type of application for DOE by Kelvinator Compressor Company. It has a capacity of 2000 Btu/h with a compressor efficiency of 62.5% and motor efficiency of 80%,[24] resulting in an EER of 6.33 Btu/Wh at the standard operating conditions (5°F evaporating, 110°F condensing, 95°F return gas, 95°F liquid).[24] The cabinet is designed to hold 400 cans of soft drinks, uses CFC-11 blown foam insulation with a K-value of 0.12 Btu•in./h•ft^2•°F (R-8.3/in.) for an overall R-value of 9.15 Btu/h•ft^2•°F (1-in. walls with inside and outside surface effects) and cabinet heat loss of 1000 Btu/h. It is also assumed that 25 W are used for fans and auxiliary equipment while the compressor is running, 110 W are used for lights, and that 275 W are used each day for defrosting the evaporator. Daily energy use is estimated in the same manner as for refrigerator/freezers. The estimated daily energy use for this base case, assuming current technology is 7.01 kWh/day or 2555 kWh/year. This analysis agrees very well with measurements collected by Kelvinator for steady-state operation of a vending machine.[24]

7.3 ALTERNATIVES CONSIDERED

7.3.1 Preferred Alternative

The preferred alternatives to CFC-12 as a working fluid and CFC-11 blown foam insulation are HFC-134a for the refrigerant and HCFC-141b blown insulation. It is estimated that the EER for HFC-134a operating at the same conditions is 6.00 Btu/Wh. The K-factor for HCFC-141b blown insulation is estimated to be 0.126 Btu•in./ft^2•h•°F, which gives an overall R-value of 8.73 and a cabinet loss of 1090 Btu/h. The corresponding estimates for energy use are 7.60 kWh/day and 2775 kWh/year.

7.3.2 Fallback Position

The fallback position, if HFC-134a and HCFC-141b do not become available, is to use HCFC-22 and EPS insulation. The EER for HCFC-22 with this compressor is 5.95 Btu/Wh. The K-factor for EPS is 0.20 Btu•in./ft^2•h•°F (R-5.0/in.) for an overall R-value of 5.85 and a cabinet loss of 1565 Btu/h. The estimates of energy use for this alternative are 9.70 kWh/day and 3540 kWh/year.

7.3.3 Worst-Case Scenario

The worst-case scenario considers the possibility that neither HFC-134a nor HCFC-22 can be used nor could alternative foam insulations. It uses ammonia for the refrigerant and fiberglass insulation. The EER of this refrigeration system would be 5.93, with cabinet losses of 1885 Btu/h (K-factor of 0.25 and overall R-value of 4.85). The daily energy use is 11.10 kWh/day and the annual estimate is 4055 kWh/year.

7.3.4 Advanced Technology Options

The advanced technology option assumes that 50% of Carnot efficiency could be achieved and that vacuum panels are used in a non-CFC foam wall that provides R-20/in. The EER for this system is 7.55 Btu/Wh and the cabinet losses are 440 Btu/h. The daily energy use is 4.45 kWh/day and the annual value is 1625 kWh/year.

The data for all five cases are listed in Table 7.1.

7.4 NATIONAL ENERGY IMPACT

The data in Table 7.1 are used to estimate the national energy impact of the four alternative technologies for this application. It is assumed that there are 3 million vending machines in use nationwide. The conversion from electrical energy to primary energy is performed using 11,500 Btu/kWh. This accounts for the power plant efficiency and also transmission losses. These results are listed in Table 7.2.

The primary factor affecting the energy penalties in each of the alternatives is the change in cabinet insulation. Even in the worst case, the steady-state efficiency is over 90% of that for the current CFC-12 systems but the annual energy use is nearly 60% greater. The higher cabinet losses result in much greater on times (as shown in Table 7.1) and consequently higher energy use. The same is true in the advanced technology option, where the steady-state EER is 20% better but the combined effect with the improved insulation results in 40% overall reduction in energy use.

Table 7.1. Energy impact for vending machines

	Current practice[a]	Preferred alternative[a]	Fallback position[a]	Worst-case alternative	Advanced technology option
Working fluid	CFC-12	HFC-134a	HCFC-22	Ammonia	Helium
cycle efficiency					
EER,[b] Btu/Wh	4.74	4.51	4.43	3.78	5.75
COP[c]	1.39	1.32	1.30	1.11	1.69
Insulation	CFC-11 foam	HCFC-141b foam	EPS	Fiber-glass	Vacuum panels
Cabinet load, Btu/h	1000	1090	1565	1885	440
Percent on-time	50%	55%	78%	94%	1625
Energy use,					
kWh/day	7.01	7.60	9.70	11.10	4.45
kWh/year	2555	2775	3540	4055	1625

[a]See page xi for definitions of refrigerants.
[b]EER = energy efficiency ratio.
[c]COP = coefficient of performance.

Table 7.2. National energy impact of chlorofluorocarbon restrictions for vending machines

Energy penalty	Preferred alternative	Fallback position	Worst-case alternative	Advanced technology option
Million kWh/year	660	2955	4500	-2,790
Quads/year	0.01	0.03	0.05	-0.03

7.5 COMMENTS AND CAVEATS

The computations performed in this section are based simply on steady-state performance of a vending machine. No effort has been made to account for dynamic performance, even though this is important because the internal loads of the machine can be very high after it is restocked. The cabinet losses have been computed for a room temperature of 90°F, and they have not been adjusted to account for seasonal variations of machines situated outdoors or for different indoor temperatures. This tends to overstate the losses (although daytime high temperatures may occasionally exceed 90°F for machines outdoors, the annual average temperature will be well below 90°F), so the energy impacts will be somewhat lower than those given in Table 7.2. On the other hand, current equipment uses compressors that have lower efficiencies than the Kelvinator model assumed here. Lower compressor efficiencies would result in higher energy use for each unit as well as greater differences between the alternative technologies and the assumed current technology. Thus, the results may be understated slightly. However, the magnitude of the energy impact, is dominated by the effects of the cabinet insulation and the corresponding losses.

8. WATER HEATERS

8.1 INTRODUCTION

Foam insulations are also used in domestic hot water heaters and there will be an energy impact from the CFC restrictions in this application if designs are not modified to maintain the same thermal integrity of the unit. Although these appliances do not face the same severe size limitations as refrigerators and freezers do, there are still limits on their overall dimensions. This analysis is done for five different types of insulation assuming that there are no differences in the cabinet dimensions or thicknesses of insulation.

8.2 ASSUMED CURRENT TECHNOLOGY

There are two basic types of insulation and two types of heating systems used in most of the water heaters on the U.S. market. About half of the units use fiberglass insulation and the other half CFC-11 foamed-in-place insulation. Likewise roughly 50% of the water heaters use electricity and 50% use gas. This evaluation considers the increase in energy use resulting from replacing CFC-11 blown foam insulation with a material with lower ODP. The base case is assumed to be a 50-gal water heater with 2 in. of foam insulation (R-value of 6.9/in.)[25] with a 70°F temperature difference between the storage temperature and the outside air. The computations do not differentiate between water heaters installed inside the conditioned space and those in unconditioned garages and basements.

The R-value which is used for the foam insulation in water heaters is not the same as that used elsewhere for refrigerators and freezers. In each case the numbers used are typical for that particular appliance.

The heat losses through the insulating jacket are estimated using a UA-ΔT approach using the dimensions of a 50-gal Sears water heater. Although it is very simple, this method produced close agreement with experimental data when it was tested against measurements for a 40-gal water heater with an 80°F temperature difference.[25] The estimated jacket losses of heat through the insulated walls for this base case (50-gal capacity) are 3825 Btu/day.

8.3 ALTERNATIVES CONSIDERED

8.3.1 Preferred Alternative

The preferred alternative to CFC-11 blown foam insulation is assumed to be foamed-in-place insulation using HCFC-141b. The R-value per inch of this foam is assumed to be 6.56 (95% of that for CFC-11 foam). In this case the jacket losses are 4025 Btu/day.

8.3.2 Fallback Position

The fallback position is again assumed to be EPS of R-5.0/in. The jacket losses are 5280 Btu/day.

8.3.3 Worst-Case Scenario

The worst-case scenario would result in all CFC blown insulations being replaced by fiberglass batts with an R-value/inch of 4.0. The corresponding jacket losses are 6595 Btu/day.

8.3.4 Advanced Technology Options

The advanced technology available for water heaters is to embed vacuum-insulated panels in a non-CFC blown foam. The panels have an R-value of 15; and when used in conjunction with other materials, a 2-in. wall then has a total effective R-value of 20.

8.4 CALCULATIONAL PROCEDURE

8.4.1 Daily Energy Use

This analysis does not include computation of a daily energy use for water heating directly. That calculation requires assumptions about water draw rates, inlet water temperatures, and overall system efficiencies and the analysis becomes much more complicated than is possible, or necessary, within the scope of this study. The simplified approach that is used is to calculate the energy needed to make up the additional jacket losses of each alternative relative to the current technology. The difference in jacket losses between the fallback position (EPS insulation) and the current technology (CFC-11 foam) is 1455 Btu/day for each water heater (that uses foam insulation). These results are summarized in Table 8.1.

8.4.2 National Energy Impact

The national energy impact of switching from CFC blown insulation to non-CFC insulation in domestic water heaters is calculated by analyzing the differences in the jacket losses between each of the alternative systems and the current base case. In the example cited earlier, the jacket losses for EPS insulation are 1455 Btu/day higher than those for the base case water heater. This amounts to 0.43 kWh/day for an electric water heater (4900 Btu/day primary energy) or 1935 Btu/day of natural gas (with an assumed recovery efficiency of 75%).[26]

Table 8.1. Energy impact for domestic water heaters

	Current practice[a]	Preferred alternative[a]	Fallback position[a]	Worst-case alternative	Advanced technology option
Insulation	CFC-11 foam	HCFC-141b foam	EPS	Fiber-glass	Vacuum panels
Overall R-value of jacket, Btu/h•ft^2•°F	13.8	13.1	10.0	8.0	20.0
Jacket losses, Btu/day	3825	4025	5280	6595	2640
million Btu/year	1.39	1.47	1.93	2.41	0.97

[a]See page xi for definition of refrigerants.

It is assumed that only the 50% of the water heaters using polyurethane foam would be affected by restrictions on CFCs. The calculations then apply to 43 million hot water heaters;[11] half of these are electric and half gas. The electric water heaters assume a 100% efficiency for the heating element and the conversion from electricity to primary fuel is done based on 11,500 Btu/kWh. The additional jacket losses of the gas water heaters are assumed to be made up at a 75% recovery efficiency. These results are listed in Table 8.2.

8.5 COMMENTS AND CAVEATS

The numbers in Tables 8.1 and 8.2 are based on a 70°F temperature difference between the water and the surrounding air and on equal thicknesses of the alternative and the base case (CFC-11 foam) insulations. No effort has been made to account for water heaters that are installed in unconditioned space nor to consider design changes due to poorer insulations. Nor has any consideration been given to the effects of the National Appliance Energy Conservation Act of 1987, which sets minimum energy efficiency standards for gas and electric water heaters.[27]

There are the same potential problems with using HCFC-141b blown foam in water heaters as were mentioned for refrigerators and freezers. Preliminary samples of the foam are not as strong as CFC-11 blown insulation. This, as well as the reduced R-value, though, may be improved as polymer mixtures are refined to improve on the properties of the resulting foams. The data used here are for actual foam samples and consequently future insulation made with HCFC-141b would be at least as good.

Table 8.2. National energy impact of chlorofluorocarbon restrictions for domestic water heaters

	Preferred alternative	Fallback position	Worst-case alternative	Advanced technology option
Electricity, million kWh/year	505	3,400	6,425	-2,645
Gas, billion Btu/year	2,295	15,480	29,240	-12,040
Total, quads/year	0.01	0.05	0.10	-0.04

9. CENTRIFUGAL CHILLERS

9.1 INTRODUCTION

Chillers are commonly used for space conditioning in large commercial buildings and for industrial applications. They operate on the conventional vapor-compression cycle to produce cold water which is subsequently piped to either fan-coil or central station units for conditioning the building air—hence, the term "chiller." Heat is usually rejected to process water from a cooling tower. These machines employ reciprocating, screw, and centrifugal compressors. The large, high capacity systems primarily use centrifugal compressors because they can be built in compact units that compress refrigerant efficiently at high flow rates. Centrifugal chillers are built both as hermetic machines, with the impeller and motor sealed in the same enclosure, and as "open" machines, which are driven by a prime mover mounted separately from the impeller. Although there is some overlap in the capacity ranges for each type of compressor smaller capacity chillers are generally designed to use reciprocal and screw compressors.

Figure 9.1 shows a comparison of the ranges of cooling capacities for chillers using these three types of compressors and identifies the refrigerants that they use. There is a relatively small number of chillers with reciprocating compressors using HCFC-22 which range in size from 7.5 to 250 tons. Less than 200 reciprocating chillers are manufactured each year that use CFC-12 in heat recovery systems. These range from 20 to 100 tons capacity. Chillers with screw compressors also use HCFC-22 and have higher capacities than those using reciprocating compressors, ranging in size from 40 to 750 tons. These too are small in number. The capacity range of chillers with screw compressors overlaps the high end of the range for reciprocating chillers and most of the ranges for CFC-11 and CFC-12 centrifugal chillers. The vast majority of chiller installations use centrifugal compressors and range in size from 75 to 8000 tons. Almost all of these use CFC-11 or CFC-12, although CFC-114, HCFC-500, and HCFC-22 are also used.

The energy-use impacts of CFC restrictions on chillers will be primarily from those using CFC-11 or CFC-12 with centrifugal compressors. There are few reciprocal chillers using CFC-12 so there will not be a significant impact from those applications and there are also only a small number of machines using CFC-114 and HCFC-500. None of the three types of chillers using HCFC-22 will be affected by restrictions on CFCs, and in fact some of these may be used as alternatives to CFC-11 and CFC-12 systems.

The overlapping of the capacity ranges for chillers with the three types of compressors provides some opportunities for replacing one type of system with another. There is also a possibility of extending the range of centrifugal chillers using HCFC-22 downward so that these could be used in some applications that would have used CFC-11 or CFC-12, although that may not be easy.

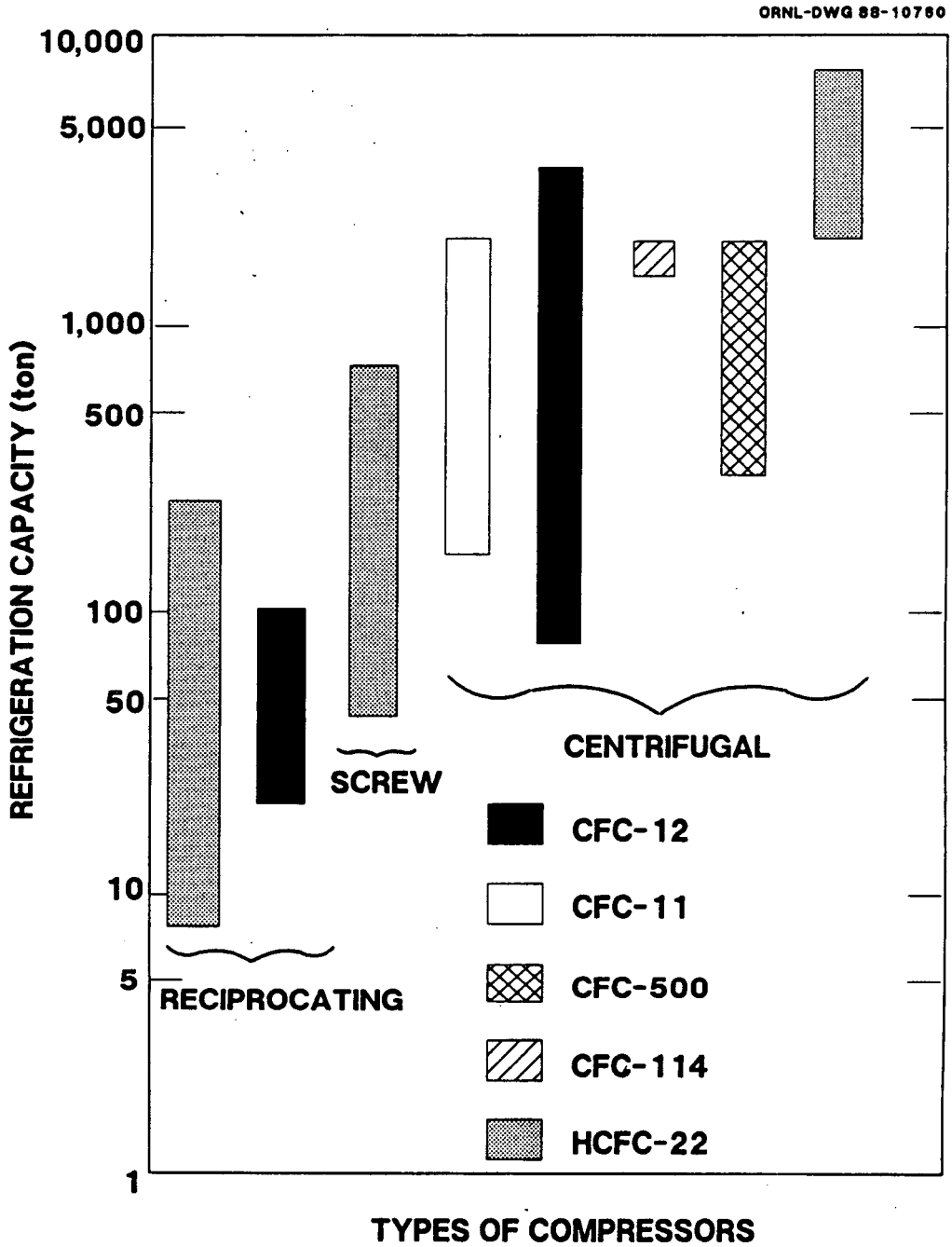

Fig. 9.1. Cooling capacities of reciprocating, screw, and centrifugal chillers.

9.2 ASSUMED CURRENT TECHNOLOGY

Overall, approximately 80% of the total chiller installations use CFC-11, 10% use CFC-12, 5% HCFC-500, 4% CFC-114, and 1% HCFC-22. This analysis focuses just on those using CFC-11 or CFC-12. The average capacity of centrifugal chillers using CFC-11 is approximately 400 tons, while the average capacity of centrifugal chillers using CFC-12 is approximately 750 tons. The composite, or weighted average, cooling capacity of a typical chiller using CFC-11 or CFC-12 is on the order of 500 tons. Almost 50,000 centrifugal chillers are currently in use in the United States.[18]

Centrifugal compressors are designed for high efficiency; the efficiency of the system will depend upon the amount of heat exchanger surface designed into the system, which in turn represents a cost vs efficiency trade-off to be selected by the purchaser. A performance of 0.62 kW/ton is representative value for high-efficiency systems using CFC-11 or CFC-12 at average load conditions (T. E. Watson, McQuay Snyder-General Corporation, private communication).

9.3 ALTERNATIVES CONSIDERED

9.3.1 Preferred Alternative

The criteria for matching refrigerant characteristics to the compressor characteristics and performance requirements of an application are more highly constrained for a centrifugal compressor than for other refrigeration systems. Centrifugal compressors are affected by the high-speed aerodynamic characteristics of the refrigerant in addition to the suction pressure and the vapor density. The system design depends on a relationship between the Mach number of the refrigerant at the tip speed of the impeller and the operating fluid pressure ratio of the system. If this relationship is not satisfied, the compressor may operate at reduced efficiency or may not operate satisfactorily at all with that refrigerant. Accordingly, the velocity of sound in the alternative refrigerant needs to be close to that of the baseline refrigerant or there will have to be adjustments in the rotational speed or design of the impeller. The preferred alternative is to find alternative refrigerants as similar to CFC-11 and CFC-12 as possible to reduce the number of changes in the design of the chiller.

HCFC-123 is a close substitute for CFC-11 with respect to most of the necessary properties of the refrigerant, and HFC-134a or a mixture of HCFC-22/HCFC-142b are close to CFC-12. The HCFC-22/HCFC-142b mixture is nonazeotropic and could require a departure from conventional technology in design of the system heat exchangers. Although the HCFC-22/HCFC-142b blend is nonflammable, HCFC-142b is moderately flammable and this mixture could only be used in some specific situations. The preferred alternative assumed here will be to make "soft" conversions of CFC-11 and CFC-12 equipment with few changes in design to operate with HCFC-123 and HFC-134a, respectively. This can be done in geared systems by changes in gear ratio and motor size. In multistage systems, minor changes in impeller dimensions will be needed. The modifications would be somewhat more extensive for maintaining existing equipment to continue in service using a substitute refrigerant because of the effects of the alternative fluid on the elastomers.

There would be negligible impact of the use of CFC-11 and CFC-12 substitutes in terms of the effect of refrigerant substitution on system efficiency

at the system design point. In general, the efficiency is influenced more strongly by compressor type and other system component variables (e.g., heat exchanger size) than by the effect of refrigerant composition on the ideal refrigeration cycle. This will be done at the expense of a moderate loss in capacity and an efficiency loss in the range of 0 to 2% (Ted Atwood, Allied-Signal, Inc., private communication, October 1987). It should be noted that one manufacturer has operated a CFC-11 system on HCFC-123 and observed a 7 to 8% efficiency loss.

This alternative is estimated to result in a representative efficiency of 0.63 kW/ton—about a 2% increase in energy use—for centrifugal chillers in sizes and applications now using CFC-11 and CFC-12.

9.3.2 Fallback Position

If either HCFC-123 or HFC-134a proves to be unacceptable for use as substitutes, it would still be possible to base a complete range of system capacities on one of these substitutes and HCFC-22. If both substitutes were unacceptable, the industry could respond by substituting larger HCFC-22 screw compressor systems for small centrifugals and extending the range of HCFC-22 centrifugals downward so that HCFC-22 screws and centrifugals cover the complete range. Either of these alternatives would require substantial design changes and new product development activity.

In centrifugal compressors, the refrigerant is spun to a high velocity as it exits the periphery of the impeller. The pressure of the refrigerant is increased by centrifugal force and, as it leaves the impeller, it enters a "diffuser" section which reduces its velocity, and further increases the pressure by converting velocity "head" to pressure "head." Proper aerodynamic design is essential to efficient performance of these machines. Centrifugal compressors do not miniaturize well because as they are reduced in size for lower capacities they may require excessive rotational speeds and will require extremely small clearances. This is a problem in extending the range of HCFC-22 machines downward because a much smaller compressor would be used to provide a specified capacity using HCFC-22 than is required using CFC-12 or CFC-11.

It is assumed that there is some efficiency loss using either of these alternatives, larger screw compressors, or smaller centrifugals using HCFC-22. A representative efficiency of 0.75 kW/ton is assumed.[28]

9.3.3 Worst-Case Scenario

The worst case is represented by substitutes that do not include HFC-134a or any chlorine-containing compounds, such as HCFC-22 and HCFC-123. It is impossible to tell what directions the industry would go under these conditions and any assumptions are going to be highly speculative. There may be one technology that dominates, as CFC-11 based centrifugal chillers do today, or there may be a broader mix of equipment that includes ammonia compression systems and also gas fired absorption chillers.

The calculations presented here are based on gas-fired absorption chillers. The current high-efficiency absorption chiller on the market is a double-effect lithium bromide/water system which operates at a cooling primary energy COP of 0.95. By comparison, a centrifugal chiller operating at 0.62 kW/ton has a primary energy COP of 1.68 (based on 11,500 Btu/kW). Use of the current absorption chiller would represent a 77% increase in primary energy use.

9.3.4 Advanced Technology Options

The energy impacts of advanced technology options are not evaluated for this application. Although there are opportunities for development of highly efficient Stirling cycle chillers and absorption cycle heat pumps, there are inadequate data available to make an assessment of their potential impacts on national energy use.

Stirling chillers would probably be feasible up to a few hundred tons capacity but not up to several thousand tons capacity for the same reasons that reciprocating compressors are not used in the larger capacities. Stirling performance would be 0.75 kW/ton at 50% of Carnot efficiency, operating between 40 and 100°F, and 0.63 kW/ton at 60% of Carnot. Thus, there would be no efficiency gain associated with the use of Stirling chillers even at a high state of development.

Advanced absorption heat pumps are now under development that are potentially capable of operating at primary energy COPs of 1.2 in cooling and 1.8 in heating (R. C. Devault, ORNL, private communication). This is a 42% increase in cooling season energy use compared with a high-efficiency centrifugal chiller that has a primary energy cooling COP of 1.7. The advanced absorption heat pump would achieve a 50% reduction in heating-season energy consumption compared to the best possible boilers, though, so there would be a net decrease in energy use in any application in which the heating season load is at least as great as the cooling season load.

The problem with assessing the impact of these advanced absorption heat pumps on national energy use is that they would not be a good alternative to the boiler and centrifugal chiller heating and cooling systems used in many buildings. The cooling load usually predominates in large commercial buildings because of high internal energy use for lighting and equipment. Such a building might not be suitable applications for absorption heat pumps but would be amenable to the use of water-loop systems operating with unitary Stirling heat pumps distributed throughout the building. The use of water-loop systems with vapor compression heat pumps in large buildings is now fairly common.

The assumptions for these four cases, or scenarios, are summarized in Table 9.1. The annual energy use for each chiller is based on a load factor of 0.3.

9.4 NATIONAL ENERGY IMPACT

The estimated national energy use for centrifugal chillers is summarized in Table 9.2. This gives a consumption of 40.8 billion kWh/year on-site energy or 0.47 quad primary energy for the existing inventory of 50,000 chillers using CFC-11 or CFC-12. The preferred alternative of conversion of CFC-11 and CFC-12 systems to HCFC-123 and HFC-134a results in a small penalty of <0.01 quad. With the fallback position of using HCFC-22 screw compressor chillers in smaller systems and HCFC-22 centrifugals for the larger systems, an energy-use penalty of 0.10 quad/year is estimated. The worst-case scenario of using state-of-the-art double-effect absorption chillers results in a substantial increase of 0.36 quad in annual energy use.

Table 9.1. Energy impact for centrifugal chillers

	Current practice[a]	Preferred alternative[a]	Fallback position[a]	Worst-case alternative
Refrigerant	CFC-11 & CFC-12	HCFC-123 & HFC-134a	HCFC-22	Lithium bromide-water
Average capacity, tons	500	500	500	500
Energy use, kW/ton	0.62	0.63	0.75	
COP[b]	5.67	5.58	4.69	
Primary energy COP[b]	1.68	1.66	1.39	0.95
Annual operating hours	2628	2628	2628	2628
Annual energy use, thousand kWh	815	828	985	
billion Btu	9.4	9.5	11.3	16.6

[a]See page xi for definitions of refrigerants.
[b]COP = coefficient of performance.

Table 9.2. National energy impact of chlorofluorocarbon restrictions for centrifugal chillers

	Current practice	Preferred alternative	Fallback position	Worst-case alternative
National energy use, billion kW/year	40.8	41.4	49.3	a
quads/year	0.47	0.48	0.57	0.83
Energy penalty, quads/year	*	0.01	0.10	0.36

[a]Worst-case assumes a gas-fired absorption chiller, so energy use cannot be expressed in terms of kW/year.

9.5 COMMENTS AND CAVEATS

It should be noted that the useful life of large chiller systems is in excess of 20 years; and consequently, it will take a long time to replace the existing stock of equipment. The full impacts estimated in this section would not be felt for many years, if ever. Successful R&D programs during that time would serve to reduce the energy penalties, perhaps substantially. The analysis for the worst-case scenario may be somewhat overstated. The selection of an alternative for this case is highly speculative, as mentioned earlier, and there are other possibilities that would not have as severe energy impacts as that used here.

The foregoing text pertains mainly to new equipment and ignores the potential problem of maintaining existing equipment. It appears that HCFC-123 may be acceptable as a drop-in replacement for CFC-11 in centrifugal systems with a moderate capacity loss and possibly a small efficiency loss. It may be necessary to rebuild existing equipment to replace elastomeric seals for the system to run with HCFC-123 instead of CFC-11 (K. E. Hickman, York International Corp., private communication). HCFC-123 is miscible with conventional refrigeration oils, so development of new lubricants should not be necessary.

It appears that greater changes will need to be made to use HFC-134a as an alternative to CFC-12 and it will not be acceptable as a drop-in replacement in existing chiller installations. The main problem with this substitution is that the high-Mach-number flow characteristics of HFC-134a are sufficiently different from those of CFC-12 as to cause serious performance problems. In addition, HFC-134a is not miscible with conventional refrigeration oils, and alternative lubricants will need to be identified or developed.

The use of refrigerant mixtures—either azeotropic or nonazeotropic— presents an additional opportunity for finding drop-in replacement refrigerants. This option has received relatively little investigation.

10. REFRIGERATED TRANSPORT

10.1 INTRODUCTION

The transport of refrigerated foods by truck and rail relies on CFCs for efficient refrigeration and insulation. The number of refrigerated rail cars has been declining each year since 1974 because of the high cost of operating and replacing them; it has dropped below 19,000 and is expected to fall to around 5,000 by 1990.[29] For those reasons the analysis in this section ignores the impact of CFC regulations on refrigerated rail cars.

There are about 178,000 refrigerated trucks nationwide,[30] although it is not known how many of these are tractor trailers and how many are smaller, short-haul delivery trucks. Refrigerated trailers are used for cargoes that must be maintained at low (-10 to 35°F), medium (35 to 55°F), and high temperatures (35 to 75°F) while operating in ambients from -65 to 130°F.[31] Three to 6 in. of insulation are used, primarily fiberglass batts or polyurethane foam (sprayed or foamed in place). Foam insulation has a higher cost but it has the advantages of sealing the walls much better and reducing air leakage into the trailer (particularly when it is in use on the highway); also, it stays in place and does not settle between the inner and outer walls of the trailer.

The refrigeration units for these trucks use either CFC-12 or HCFC-22 and can be driven by an electric motor or a small diesel engine mounted on the trailer. Fuel use for diesel engine driven refrigeration units is estimated to be between 0.25 and 0.65 gal/h per 12,000 Btu/h of cooling delivered.[32,33] The uncertainties in fuel use and gross assumptions about trailer design and usage greatly overshadow the small differences in cycle efficiency between CFC-12 and the most likely substitutes for it. Consequently alternative working fluids are not considered in this application.

10.2 ASSUMED CURRENT TECHNOLOGY

A typical application of a refrigerated trailer has been taken to be a 45-ft trailer (8 ft wide and 7 ft high) with 4 in. of foamed-in-place polyurethane insulation (R-7.2/in.), with a 70°F temperature difference between the cargo space and the ambient air (this is different than the R-value used for other applications but is consistent with "typical" use in trailers). However, heat gains by the trailer are also affected by transmission through the framing members. Generally, rules of thumb are used to account for this with manufacturers adjusting the estimated heat gains by 10 to 50% when sizing the refrigeration system.[34] The cooling load, in the case presented here, is increased by 33% to include heat transmission through framing members of the trailer. It is also assumed that the trailer is in use 50% of the time (4380 h/year). The heat gain through the trailer walls is 4560 Btu/h.

The analysis considers only the heat gains by the trailer due to the temperature difference without accounting for air leakage due to moving at highway speeds, gains due to opening the doors to load and unload cargo, or additional loads resulting from the cargo itself. It is assumed that all these other factors would be the same for each of the alternative technologies examined and consequently would not affect the estimated differences in energy use.

10.3 ALTERNATIVES CONSIDERED

10.3.1 Preferred Alternative

The preferred alternative insulation is HCFC-141b blown sprayed or foamed-in-place insulation. It is assumed that the R-value of this foam is 95% that of CFC-11 blown foam, or 6.84 $h \cdot ft^2 \cdot {}^\circ F/Btu \cdot in$. All other assumptions are the same as for the base case current technology. The heat gain through the walls is 4800 Btu/h.

10.3.2 Fallback Position

The fallback position is EPS with an R-value of 5.0 $h \cdot ft^2 \cdot {}^\circ F/Btu \cdot in$. The use of EPS would have significant impact on air leakage into the trailer, particularly while on the road, since the joints would not be sealed as well as with foamed-in-place insulation. This has not been taken into account. The heat gain for this alternative trailer is 6565 Btu/h.

10.3.3 Worst-Case Scenario

The worst-case alternative considered is fiberglass batts with R-values of 4.0/in. The heat gain in this case is 8205 Btu/h.

10.3.4 Advanced Technology Options

The advanced technology option considered is the use of unspecified high R-value panels that would provide R-10/in. No effort has been directed toward identifying what particular product could be used or if it would be economical to do so. In this instance, the calculations are more appropriate for determining whether the potential energy savings are great enough to make it worthwhile developing such an insulation. The heat gain of the trailer, using the R-10/in. assumption, would be 3280 Btu/h.

10.4 CALCULATIONAL PROCEDURE

The total heat gains to a trailer for a year are computed using a simple UA-ΔT approximation with a rule of thumb adjustment for the thermal bridging of the frame of the trailer. The trailer is assumed to be 45 × 8 × 7.25 ft (all external measurements). All types of insulation are taken to be 4 in. thick and the temperature difference is assumed to be 70°F. It is not always feasible to use a thicker layer of an insulation with a lower R-value per inch. The external dimensions of these trailers are regulated so that any increases in insulation thickness must be at the expense of internal volume. Adding an additional 1 in. of

insulation to go from 4 in. to 5 in. reduces the internal volume of the trailer by over 100 ft^3, a 5% decrease. This is a significant loss to the shippers. The estimated heat gains are increased by 33%, as mentioned earlier, to account for thermal bridging.

It has been assumed that the trailer would be in use for refrigerated products on just one-half of each trip, returning empty after making a delivery. It has also been assumed that the trailer would be in service 24 hours/day, 365 days/year. A diesel engine driven refrigeration system is used which requires 0.65 gal/h to provide 12,000 Btu/h of cooling. These results are listed in Table 10.1.

10.4.1 National Energy Impact

The national energy impact is computed by evaluating the differences in diesel fuel use per day for 178,000 trailers nationwide under the assumptions listed above. The results are converted from millions of gallons of diesel fuel to quads of energy based on 120,000 Btu/gal. Table 10.2 lists the energy penalties for each alternative.

10.5 COMMENTS AND CAVEATS

There are many rough approximations that have gone into the estimates in Table 10.2, and perhaps the only significant conclusion is that the impacts are very small. There is a broad diversity of equipment used in this application operating under a wide range of ambient and refrigerated cargo conditions. The assumptions that have been selected to define a "typical" refrigerated truck/trailer unit were chosen to make the energy impact as large as possible to establish an upper bound for the impact. It is reasonable to conclude that the impact of each alternative is no more than what is identified in Table 10.2. The analysis has considered only the impact of CFC restrictions on trailer insulation. The impact of different working fluids (e.g., HFC-134a, HCFC-22, ammonia) has not been considered because the differences are so small (around 95% of the efficiency with CFC-12) that they are not meaningful in conjunction with the gross assumptions made for this application. There is no indication that CFC restrictions will lead to significant changes in energy use in this application, and a more detailed analysis is not warranted.

Table 10.1. Energy impact for refrigerated transportation

	Current practice[a]	Preferred alternative[a]	Fallback position[a]	Worst-case alternative	Advanced technology option
Insulation	CFC-11 foam	HCFC-123 foam	EPS	Fiber-glass	R-10/in. panels
R-values of wall	28.8	24.5	20.0	16.0	40.0
Heat gain through insulation, Btu/h	3427	3607	4935	6169	2468
Heat gain through wall, Btu/h	4560	4800	6565	8205	3280
Diesel fuel use, gal/d	5.93	6.24	8.54	10.67	4.26

[a]See page xi for definitions of refrigerants.

Table 10.2. National energy impact of chlorofluorocarbon restrictions for refrigerated transportation

Energy penalty	Preferred alternative	Fallback position	Worst-case alternative	Advanced technology option
Diesel fuel,				
million gal	10	84	154	-305
quads/year	0.001	0.010	0.018	-0.006

11. RESIDENTIAL INSULATION

11.1 INTRODUCTION

The analysis of residential insulation is divided into several sections. These include (1) walls for single-family, detached frame houses; (2) walls for detached, low-rise multi-family homes (e.g., duplexes, townhouses); (3) foundations of single- and multifamily homes; and (4) walls of high-rise, multifamily residences (i.e., apartment buildings). The first two areas are treated in this section of the report. The analysis of foundation insulation is covered in the next section, and the discussion of apartment buildings is in the section on commercial walls. An analysis of heat losses through roofs of residential buildings has been omitted from this study because these are typically insulated with fiberglass and will not be affected by CFC alternatives.

New homes are typically constructed with a sheathing material between the exterior siding and the 2 × 4 wooden stud framing of the wall. The sheathing contributes to the insulating value of the wall and helps reduce air leakage into the building. Plywood is used as sheathing to add strength to the walls (particularly around the corners of the building), fiberboard made from vegetable matter, or EXPS or polyurethane (primarily isocyanurate) foam boards are also used to improve the insulating value of the wall and to provide an air- and vapor-retarding layer. These latter two materials are particularly good insulations because of the low thermal conductivities of the CFC-11 and CFC-12 used as blowing agents to make the foams.

In a study for DOE, Petersen and Fanney, investigated the consequences of CFC regulation on residential and commercial construction.[35] Their conclusion was that in almost all cases substituting greater thicknesses of a poorer quality insulating material for the CFC blown foam sheathing materials is justified on the basis of life cycle cost. The best substitute sheathing material, based on R-value per inch per cost of material, is EPS.

The analysis in this report draws heavily on the Petersen and Fanney work, but it does not consider design changes needed to maintain the same overall R-value for the wall by using thicker layers of sheathing to replace the CFC-blown foams. This work is based on substituting an equal thickness of alternative materials for those places where the CFC-blown-foam sheathings are currently used. In many instances, local building codes and building energy standards will require that thicker layers of insulation or sheathing be used in order to maintain the same thermal performance as walls built with CFC blown insulations. The assumption of equal thicknesses, then, presumes that all walls would have exceeded minimum standards and that the use of alternative sheathing materials would still be in compliance with these codes. That is a very conservative assumption and it is likely that in many cases thicker layers of sheathing would be required at much higher cost; consequently, the actual impacts would be lower than the estimates derived in this study.

One nationwide survey found that only 14% of the opaque wall area of new construction is covered with polystyrene insulations of all thicknesses (CFC-12 foams), 11% polyurethane insulation (CFC-11 foams), and 75% with fiberboard or plywood.[35] The substitution of alternative materials for CFC-blown foams then applies to only a portion of the buildings (or wall area) in the national housing stock.

11.2 ASSUMED CURRENT TECHNOLOGY

The sheathings in the current technology are assumed to be those that were in common use in 1986 new housing starts. These consisted of either a fiberboard material with R-2.64/in., EXPS (R-5.0/in.), or polyurethane (R-7.2/in.). Information on the use of each type of sheathing is taken from the results of a 1986 survey.[36] The percentages of new homes using different materials and thicknesses of sheathings varied with the region of the country, generally ranging between 0.5 and 1.0 in., with the thicker polyurethanes favored in the north central and northeast parts of the country. The distribution of sheathing materials is described in greater detail in Appendix C.

11.3 ALTERNATIVES CONSIDERED

11.3.1 Preferred Alternative

The preferred alternatives in this case are to use HFC-134a blown polystyrene and HCFC-141b blown polyisocyanurate and polyurethane foams as near drop-in substitutes for CFC-12 and CFC-11 as blowing agents without any significant changes in the use of foam sheathing materials nationwide. The R-values per inch of the substitute foams are assumed to be 91% and 95% of those for the polystyrene and polyurethane materials they replace, 4.59 and 6.86 respectively. This is in agreement with preliminary data from Pennwalt on actual samples of foam insulation (R. Crooker, Pennwalt Corp., private communication, September 1988). Nationwide, each new home that would have been insulated with a CFC-blown foam is assumed to use an equal thickness of the alternative HFC-134a or HCFC-141b blown foam.

11.3.2 Fallback Position

This case considers the consequences if all CFC-blown insulations are unavailable for the residential construction market and that EPS is substituted for both EXPS and polyurethane sheathing. The R-value of this material is 4.17/in. Again, an equal thickness of EPS is used wherever the polystyrene or polyurethane board would have been used based on the 1986 statistics.

11.3.3 Worst-Case Scenario

The worst-case alternative is to forego the use of foam insulations and to rely entirely on fiberboard materials as substitutes where CFC-11 or CFC-12 blown foam sheathings would have been used. This is a very unlikely situation, since significant amounts of EPS are used and it is a proven, viable alternative. The R-value per inch of this material is 2.64.

11.3.4 Advanced Technology Options

The advanced technology option considered is the use of unspecified high R-value panels that would provide R-10/in. No effort has been directed toward identifying what particular product could be used or if it would be economical to do so. In this instance, the calculations are more appropriate for determining whether the potential energy savings are great enough to make it worthwhile developing such a material for building insulation.

Table 11.1 summarizes the alternatives for each of the five cases.

11.4 CALCULATIONAL PROCEDURE

The calculations are performed for 59.3 million detached wood frame houses and 37.3 million frame townhouses and duplexes nationwide.[37] Each single-family house in this study is assumed to be a 1600-ft^2, single-family residence, with 1360 ft^2 of opaque (nonwindow) outside wall area (the same as used in the Peterson and Fanney report[35]). The townhouses are assumed to have 816 ft^2 of opaque wall area. The external wall construction is shown in Fig. 11.1. There is an outer surface of wooden lap siding, a layer of sheathing, a frame of 2 × 4 studs, 3.5 in. of fiberglass insulation, and a 0.5-in.-thick sheet of plaster board.

Further, it is assumed that the uses of gas, oil, and electric heat in these homes are in the same proportions as they were for new homes built in 1986 in each region of the country. Finally, it is also assumed that the percentage of wall area in these 90.6 million buildings using 1/2, 5/8, 3/4, and 1 in. of fiberboard, polystyrene, and polyurethane sheathings are the same as they were for 1986 construction.

Table 11.2 contains data for the total wall R-values for frame walls using the various thicknesses of fiberboard, EPS, EXPS (blown with CFC-12 and HFC-134a) and polyurethane (blown with CFC-11 and HCFC-141b). These include the effects of the exterior siding, the sheathing material, R-13 fiberglass batts, 2 × 4 studs (16-in. spacing), and 1/2-in. wallboard. Only the heat gains and losses through the opaque walls are considered in this analysis; and the gains and losses through the windows, ceilings, and floors are assumed to be the same for each of the alternatives considered.

Peterson and Fanney[35] estimated the increases in the heating and cooling loads due to replacing 0.50-in. EXPS or polyurethane sheathing with 0.50-in. EPS sheathing. This was done for homes in 12 different cities using 4 different kinds of heating systems. Construction data on actual sheathing use provided a breakdown on materials and thicknesses by region of the country. The results for the 12 cities are averaged for each geographic region (in this report) to get estimates of the incremental heating and cooling loads corresponding to the regional data on sheathing use. Increased building loads for sheathings that are 0.625, 0.75, and 1.00 in. thick are derived from the Peterson and Fanney results,[35]

Table 11.1. Summary of alternative sheathing materials

	Current practice[a]	Preferred alternative[a]	Fallback position[a]	Worst-case alternative	Advanced technology option
Sheathing material	CFC-12 & CFC-11 foams	HCFC-141b extruded PIR & PUR[b] foams	EPS	Fiber-board	R-10/in. panels
R-value per inch	5.0/7.2	4.59/6.86	4.17	2.64	10.0

[a]See page xi for definitions of refrigerants.
[b]Polyisocyanurate and polyurethane foam sheathing.

Table 11.2. Total wall R-value of wall using alternative sheathing materials (h•°F•ft²/Btu•in.)

Material[a]	Thickness of sheathing (in.) 0.50	0.625	0.75	1.00
Fiberboard	14.1	14.5	14.8	15.6
Expanded polystyrene	14.9	15.5	16.1	17.2
HCFC-141b extruded polyisocyanurate	15.0	15.6	16.2	17.4
CFC-12 extruded polystyrene	15.4	16.1	16.7	18.1
HCFC-141b polyurethane	16.4	17.3	18.2	20.0
CFC-11 polyurethane	16.6	17.6	18.5	20.4
R-10/in. panels	18.1	19.4	20.7	23.3

[a]See page xi for definitions of refrigerants.

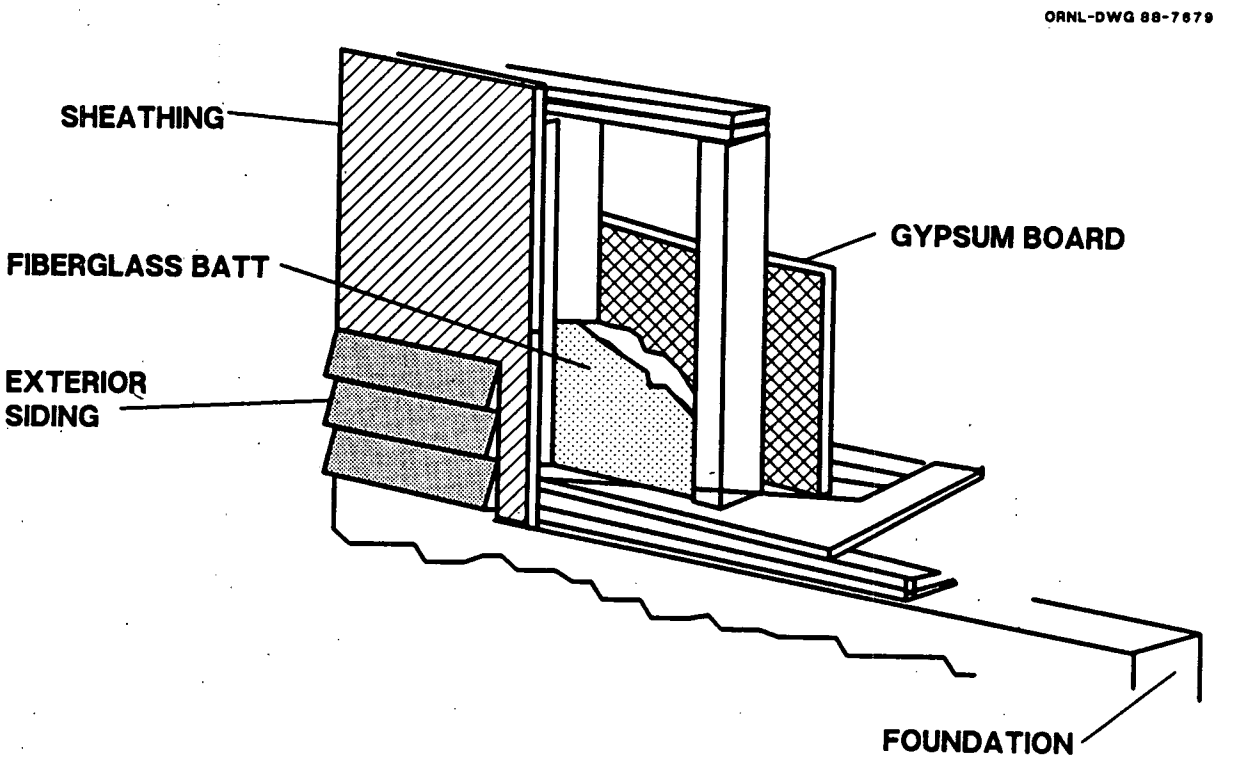

Fig. 11.1. Cutaway drawing of residential wall construction.

using the U-values corresponding to the data in Table 11.2 to make use of the data on actual use of different thickness of sheathings. There are more details of this analysis in Appendix C.

The data for the inventory of homes are used with the incremental loads for each home and the heating and cooling system efficiencies to give the national energy impact for increased building loads for a single year. It has been necessary to perform the intermediate step of computing the energy penalties on the basis of the type of heating system because the amount of energy used to replace the increased building loads will depend on the efficiency of the heating system used. Seasonal efficiencies of 67% are assumed for the gas and oil furnaces (accounts for burner, heat exchanger, and duct losses). The heating seasonal performance factor (HSPF) for the heat pump varies with the climate, so it is lower in the colder northern areas than it is in the south. The data used here represent HSPFs between 1.8 and 2.0 (this is for conventional heat pumps using HCFC-22 as the working fluid; this study has not investigated the impact of regulating HCFC-22, only the impact of not using HCFC-22 as a replacement for CFC-12). The electrical energy use for resistance furnaces, heat pumps, and air-conditioning are converted to primary energy use (based on 11,500 Btu/kWh).

The results of all these calculations are summed for the regions of the country and the totals are listed in Table 11.3. The impacts are fairly small because the sheathing provides only a small part of the total insulation in residential walls and because all foam sheathings together are currently used on just 25% of the total exterior wall area for new construction. The results would still be small relative to other applications of CFCs, though, even if these numbers were scaled to represent 50 to 100% of all exterior wall area covered with CFC-blown foam sheathings.

Table 11.3. Energy penalties for chlorofluorocarbon-foam alternatives in residential walls

Energy penalty	Preferred alternative	Fallback position	Worst-case alternative	Advanced technology option
Detached single family, trillion Btu/year	4.6	14.4	30.4	-28.5
Low-rise multifamily, trillion Btu/year	2.1	5.5	12.7	-13.1
Total, 10^{12} Btu/year	6.7	19.9	53.1	-41.6
Total, quads/year	0.01	0.02	0.05	-0.04

11.5 COMMENTS AND CAVEATS

The computations in this section include incremental heating and cooling loads. It has been assumed that 75% of the homes in the South have central air conditioning and that 25% of the residences in the rest of the country do. These are coarse assumptions, but they result in a weighted average (based on building starts in each part of the country) of 48% of the homes being air conditioned. In fact, slightly more than that (52%) of the homes nationwide have some form of air conditioning,[11] and that percentage is growing gradually. In any event, the impact on air conditioning is very small, about 0.003 quad/year in the worst case, so the estimates have not been refined to be more precise.

This section has not addressed anything other than frame construction for residences. The total number of homes used in the analysis includes masonry and "factory built" (i.e., mobile homes and prefabricated homes), although no separate analysis is done for this kind of construction (the Peterson and Fanney report[35] included a separate section on masonry walls). High-rise apartment buildings are not covered. The analysis for apartment buildings is included in the section on commercial construction.

Further impacts will be felt in residential buildings if there are significant disruptions in the supply of HCFC-22 for heat pumps and room and central air conditioning equipment. Although production of HCFC-22 is not restricted under current regulations, shortages could occur as demand grows. It is likely to be a substitute for CFC-12 in many foam packaging materials, as a blowing agent in polystyrene insulation, and as a refrigerant or part of a blend of refrigerants in refrigeration equipment. There is also the possibility, perhaps remote, that HCFC-22 will come under greater scientific and regulatory scrutiny as production and use expands to meet this growing demand. As a result, the energy impacts of the worst case presented here would be larger than these estimates when the effect of substitutes for building equipment are included.

Finally, the estimates contained in this section are based on the use of foam sheathing materials in 1986. Significant changes in the percentage of homes that would be built with CFC-blown foam insulation would change the results. The energy penalties would be larger if comparisons are made relative to assumptions of increased use of foam insulation in energy-efficient homes, or conceivably less under assumptions that first costs are driving decisions on building materials. No attempt is made to derive future decisions in this analysis. Compared with other applications of CFCs, there is not a large energy-use impact due to the use of CFC-blown foam sheathings on cavity walls that contain R-13 fiberglass batts for any reasonable set of assumptions.

12. FOUNDATION INSULATION

12.1 INTRODUCTION

To this point, the analysis has considered only increases to the building energy loads through the exterior walls. Jeff Christian, of Oak Ridge National Laboratory, has done an extensive review of the energy penalties that could occur if EXPS foam boards (blown with CFC-12) were not available for insulating the outside of basement walls (from below ground level up to the floor plate of the house), the foundation walls around crawl spaces, and around the slab of slab-on-grade homes.[37] His work includes references for the average number of new building starts for each state each year, the divisions between single- and multifamily homes and between residences built with basements, crawlspaces, and directly on a cement slab, as well as the current construction practices for foundation insulation.

12.2 ASSUMED CURRENT TECHNOLOGY

Current practice in foundation insulation depends on the type of construction: basement, crawlspace, or slab-on-grade. Basements may or may not be heated (and cooled); and if they are part of the conditioned space, they may or may not be insulated. Basements can be insulated by using EXPS board on the outside of the basement wall, as shown in Fig. 12.1, or by framing out the interior of the wall and using fiberglass batts. Crawlspaces can also be insulated on the exterior with EXPS boards or on the inside using batts; or they can be left uninsulated and the floor insulated with batts. Slab-on-grade construction can be insulated with a skirt of CFC-blown foam board surrounding the footer. All these techniques are currently used to some extent in the United States and are considered part of the current technology.

Unlike most of the applications evaluated in this study, the use of foundation insulation and relevant building standards are changing rapidly. This analysis assumes that the "current practice" is what is expected to be the norm for foundation insulation in the future. This means that more foundations are insulated, with the proposed ASHRAE 90.2P, New Building Energy Efficiency Standard, being incorporated into building codes, and that an optimal level of insulation will be used according to geographic region. The work here also assumes that although more foundations are insulated, the percentages of those using foam insulation and those using fiberglass remain the same. For example, a 1982 survey found that 30% of new single-family homes with basements have insulated the basement walls; 85% of those used fiberglass and 15% used foam boards. This work assumes that the 30% has increased to the corresponding optimal level for each climatic region (e.g., Northcentral, Southwest) but has kept the 85:15 ratio between fiberglass batts and foam boards the same. The actual percentages for fiberglass and foam boards depend on a number of factors,

ORNL-DWG 87-6005

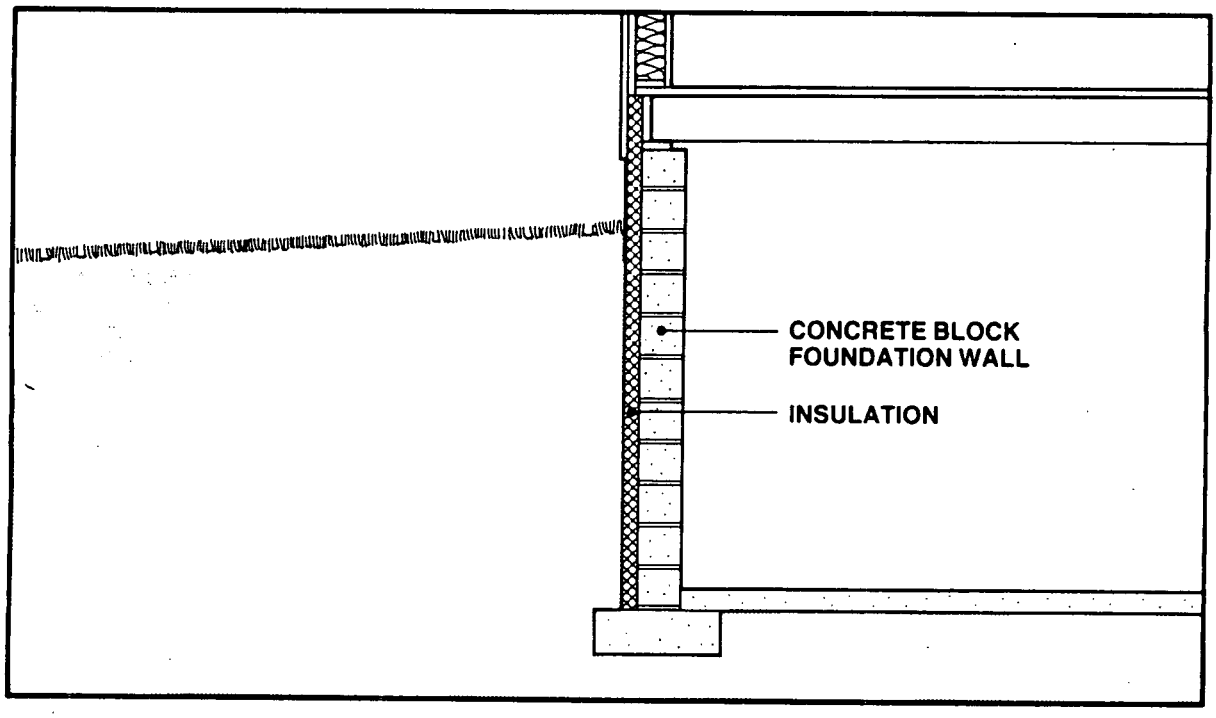

Fig. 12.1. Cutaway drawing of a basement wall insulated on the exterior surface with extruded polystyrene.

including cost and geographic region, and has been shifting toward greater use of foam boards in recent years.

12.3 ALTERNATIVES CONSIDERED

12.3.1 Preferred Alternative

The preferred alternative is to continue to use the current techniques with whatever materials, or substitutes, are available. This assumes that either HFC-134a blown foams become available to replace EXPS or that fiberglass or EPS insulation drainage boards become established as a viable alternative. Drainage board can be made from fiberglass with the fibers oriented to direct moisture to a foundation drain or EPS with an asphaltic bonding agent. It directs moisture away from the foundation and when dry it has thermal properties comparable to EXPS. Drainage board is in use in Europe for foundation insulation but has not been broadly accepted in the United States. The calculations for this scenario assume that HFC-134a blown foam or drainage board could be used in adequate thicknesses to provide the same thermal effect as CFC-12 blown foam.

12.3.2 Fallback Position

The fallback position, if HFC-134a foam insulation and drainage board do not become available, is to substitute interior fiberglass batts wherever possible for foam foundation insulation. Christian[37] concluded in one scenario that there would be no energy impact on basement or crawlspace walls from the substitution of fiberglass for foam, but that there is no suitable replacement for foam insulation for slab-on-grade construction in this case. The results presented, consequently, are due to only the slab-on-grade construction. It should be pointed out that although there may not be energy impacts due to insulating basement and crawlspace walls with fiberglass, the resulting walls are not equivalent to walls insulated with CFC-blown foams. There could be differences in cost, possible problems with moisture condensation, cracking, radon penetration, and lost interior basement space.

12.3.3 Worst-Case Scenario

The worst case for foundation insulation assumes that no substitution would be made for EXPS board in foundation insulation if CFC-12 were not available. This would affect only those homes that would have been insulated with blown foams, though, and there is no change in the percentage of foundations and floors that are insulated with fiberglass batts.

12.3.4 Advanced Technology Alternatives

Advanced technology alternatives are not evaluated for foundation insulation. Results for the preferred, fallback, and worst-case alternatives are computed from data published by Christian.[37] His work did not include an advanced technology alternative, so the required data are not readily available for use here. It appears that significant energy savings could be possible with a high R-value panel and that such an alternative should be investigated further.

12.4 CALCULATIONAL PROCEDURE

The data in Christian's report[37] have been used to derive energy penalties corresponding to the three sets of assumptions used in this study. Adjustments are made to compensate for differences in the number of dwellings used in each case and for the substitute insulations used. Christian's report bases its conclusions on 20 years of new construction (at the average rate for the past 20 years) and retrofitting 30% of the homes built before 1990 with foundation insulation. This results in 60.6 million single-family homes and 36.4 million multifamily homes. The assumptions used for this study are a "complete" turnover of the projected 1990 housing stock. This is not to say that pre-1990 homes will disappear altogether, and really represents substantial new construction of 59.3 million single-family homes and 37.3 million multifamily homes with optimal (in terms of ASHRAE 90.2P) foundation insulation.

The analysis done here also considers alternatives that could be used in place of foam insulations. This is a significant difference from the assumptions in Christian's study. There is sufficient information in his report, though, to derive results for the scenarios used here: (1) new material with equivalent thermal properties (i.e., HFC-134a blown foam or drainage board), (2) fiberglass batts substituted wherever possible, and (3) no alternative insulation used in place of EXPS.

12.5 NATIONAL ENERGY IMPACT

The national energy penalties corresponding to these cases are listed in Table 12.1. The detailed calculations that have gone into these results are discussed in Appendix D. Basically, Christian's results[37] were adjusted to account for the differing assumptions between the alternative materials considered in the two studies and for the differing number of buildings. The use of HFC-134a foam insulation or drainage board in place of EXPS would have no significant impact on residential energy use. The fallback position of fiberglass insulation results in an annual energy impact of 0.17 quad/year. The potential impact of the worst-case scenario is 0.32 quad/year.

Table 12.1. Energy penalties for chlorofluorocarbon-foam alternatives in foundation insulation

	Preferred alternative	Fallback position	Worst-case alternative
Total, quads/year	0.00	0.17	0.32

13. COMMERCIAL CONSTRUCTION

13.1 INTRODUCTION

Commercial buildings currently employ CFC-11 blown polyurethane foam insulations, CFC-12 EXPS board, EPS, and fiberglass batts and boards. The elimination of CFC-11 and CFC-12 foam insulations will cause changes in building design and in some cases will result in national energy impacts. The National Bureau of Standards (NIST) examined this application for DOE to determine the implications of substitute materials on national energy use. Petersen and Fanney[35] of NIST examined seven different kinds of walls that are common in commercial construction (i.e., four types of masonry walls, wood and steel stud walls, and two types of curtain walls). They looked at alternative insulating materials in terms of their compliance with building codes and fire regulations as well as their thermal properties.

Although NIST was able to identify common building practices, they did not attempt to quantify the extent or usage of each one or the overall use of CFC-blown insulations in commercial construction. They found that "in general, economic R-values for wall insulation . . . will be somewhat lower [in commercial buildings] than in single-family dwellings",[35] partly because the building loads are dominated by internal heat gains, and the exterior walls have a large ratio of glass to total wall area. Improved wall insulation can actually increase cooling loads due to the preponderance of internal heat gains in commercial buildings and can negate any energy savings from reduced heating loads. Also, there is a smaller incentive to increase wall insulation in commercial buildings than there is in residential construction because a much larger fraction of the wall area is devoted to windows (which can be as much as 50% or more of the total wall area). At some point, further increases in insulation in the opaque wall area are not economically justified because they have a small incremental effect on the total wall R-value. Finally, commercial buildings exhibit a very high cost associated with each unit of interior floor space and it is uneconomical (in most cases) to add any thicker insulation if it is at the expense of interior space.

13.2 ASSUMED CURRENT TECHNOLOGY

There are five broad categories to describe exterior building walls for commercial construction:

1. wood and steel stud wall systems: similar in construction to residential wall systems,
2. concrete-masonry walls: foam insulation on the inside or outside wall surface,
3. brick and block cavity walls: rigid foam or EPS in the cavity between the 8-in. concrete blocks and the 4-in. brick facing,

4. metal-skin composite foam core panels: prefabricated metal panels with CFC-11 foamed-in-place insulating core, and
5. flat curtain panels: interior insulation.

The stud wall systems are customarily insulated with fiberglass batts or they are finished with a stucco-type exterior which is adhered to EPS or other rigid foam insulating sheathing. Usually, it is not economical to use foam insulations on the inside of stud walls insulated with fiberglass batts, because the cost of the lost floor space exceeds the value of any potential energy savings. CFC-11 and CFC-12 blown foams can be used as exterior insulation in concrete-masonry walls, although EPS is the most commonly used rigid foam in this application.[35] All three types of foam are also used in interior insulation in some instances. Cavity walls can have an air space between the brick veneer and the concrete blocks, or this space can be filled with a foam insulation. Prefabricated panels are made with metal skins with foamed-in-place insulation or in flat panels with insulation added on the interior of the wall after they are set in place. The flat curtain panels are customarily insulated with fiberglass batts because of the irregular shapes involved. Sprayed-on foam insulations can also be used.

NIST estimated that there would be no adverse energy impact for stud wall systems, concrete-masonry walls with exterior insulation, brick and block cavity walls, or flat curtain panels. They concluded that there is likely to be an energy impact with the foam core panels and with the concrete-masonry walls with interior insulation (or exterior where the outside dimensions cannot be changed). Petersen and Fanney[35] did not attempt to quantify the energy penalties, though, because there simply are not sufficient data to make a reasonable evaluation.

The analysis in this section attempts to establish some coarse upper bounds on the energy impacts of several possible alternatives. These are extremely rough estimates and the only conclusion that should be drawn from them is that the true impact is likely to be less than the value derived in each case.

13.3 ALTERNATIVES CONSIDERED

13.3.1 Preferred Alternative

The evaluation in this case affects only the masonry walls with interior insulation and the foam core panels. The other building types are not affected adversely by changes in the availability of CFC-11 and CFC-12 foam insulations. In this case, it is assumed that HCFC-141b is used as a blowing agent to produce polyisocyanurate foam with 91% of the thermal resistance of the insulations they are replacing. Coarse calculations show that there is about a 2% decrease in total R-value of the walls of either type in this category (although the R-values of the masonry and foam panels are not the same). This is based on 30% of the wall area being double-pane windows for the masonry walls and 50% double-pane windows for the foam panels.

An informal survey has found that most commercial construction consists of steel walls with fiberglass batt insulation. Only a small amount of total construction is either masonry or prefabricated panels that use CFC-blown foam insulation. Consequently, it is assumed that only 20% of the commercial building stock uses this type of construction. There are no data on the actual usage of this type of construction, but it is reasonable to assume that 20% is an upper bound.

13.3.2 Fallback Position

This case assumes that EPS is used as a substitute for CFC-11 and CFC-12 foams in the two cases mentioned above. This may not be a realistic alternative for economical production of foam core panels because of the major changes necessary in the manufacturing process. If such panels were made, however, using EPS with an R-value of 4.0/in., there would be an energy impact. The change in total R-value for the walls is about 8%. Again the assumption is that 20% of commercial wall area is made with foam core panels or is masonry walls where interior insulation is applied.

13.3.3 Worst-Case Scenario

The worst case is evaluated by applying an 8% decrease in total R-value to 40% of the commercial building stock.

13.3.4 Advanced Technology Options

The advanced technology option considered is the use of unspecified high R-value panels that would provide R-10/in. No effort has been directed toward identifying what particular product could be used or if it would be economical to do so. In this instance the calculations are more appropriate for determining whether the potential energy savings are great enough to make it worthwhile developing such an insulation.

The change in total wall R-value is an increase of about 4.5%. It is assumed that 40% of commercial wall area could be made with foam core panels or that masonry walls are used where interior insulation is used.

The assumptions for these five cases are summarized in Table 13.1.

Table 13.1. Assumptions for alternative commercial

	Preferred alternative	Fallback alternative	Worst-case alternative	Advanced technology option
% decrease in total wall R-value	1	8	8	-4.5
% of building stock affected	20	20	40	40

13.4 CALCULATIONAL PROCEDURE

Estimates of the national energy-use impacts of the alternatives are computed by multiplying the percentage change in overall wall R-value by the fraction of buildings affected and the energy use for space conditioning of commercial buildings resulting from heat losses and gains through the walls. This is an oversimplified procedure using numerous assumptions, although every effort has been to cause any errors to be made on the high side; as a result, it can be stated with some certainty that the impacts would not be larger than the results presented here.

Several assumptions have been made in addition to those listed in Table 13.1. First, these calculations are based on a nationwide energy use of 6.84 quads/year for heating, ventilating, and air conditioning (HVAC) of commercial buildings, a value consistent with information in the DOE 1987 Multi-Year Plan (T. Statt, DOE, private communication, July 1988). Also, it has been assumed that one-half of the building energy use for HVAC is due to heat gains and losses through the walls. This value is deliberately high, for the reasons explained above; in fact, Pacific Northwest Laboratories estimated that 12% of the HVAC energy use is due to the walls.

13.5 NATIONAL ENERGY IMPACT

In the cases considered, with the assumptions that have been made, it is believed that the impact of CFC restrictions for the preferred alternative cannot be more than 0.01 quad/year, 0.05 quad/year for the fallback position, and 0.11 quad/year for the worst case. These results are summarized in Table 13.2.

Table 13.2. National energy impact of chlorofluorocarbon alternatives for commercial wall insulation

Energy penalty	Preferred alternative	Fallback position	Worst-case alternative	Advanced technology option
Quads/year	0.01	0.05	0.11	-0.08

13.6 COMMENTS AND CAVEATS

The coarse nature of these computations has already been emphasized. A more deliberate and thoughtful analysis of this area could be performed, but unfortunately, the inadequacy of existing data make that a challenging, if not impossible, task. These estimated impacts are small, though, and a more precise evaluation would probably produce even smaller values.

14. LOW-SLOPE ROOFS

14.1 INTRODUCTION

Low-slope single-ply and built-up roofs are used in commercial, industrial, and some residential buildings. In 1983 there was an estimated 33 billion ft^2 of low-slope roof area; 25% of this was in residential, 4% in industrial, and 71% in commercial buildings.[38] These roofs are typically a metal or masonry deck with one or more layers of insulation, and they may have a suspended ceiling on the inside or additional layers of material on the outside. They are usually designed to meet an R-value specified by the architect or building owners rather than to comply with building codes that affect their energy efficiency. Many different materials can be and are used as insulation in low-slope roofs. These include polyurethane spray and boards, polyisocyanurate, and EXPS boards, all of which contain either CFC-11 or CFC-12 and also EPS, and fiberglass boards. Currently, about 60% of commercial roofs are made with urethane and isocyanurate, 5% with EXPS, and the remainder with other materials (George Courville, ORNL, private communication, June 1988).

14.2 ASSUMED CURRENT TECHNOLOGY

This report focuses on the estimated 65% of roofs that use CFC foams, and it treats this entire application as though they were all used in commercial buildings. Commercial building energy use is a complex subject because of the wide variety of buildings, the internal heat gains (heat generated by lighting, equipment, and occupants cause large buildings to have net cooling loads even in winter), and building use schedules. A rigorous analysis would require extensive data on the national inventory of buildings—data that just do not exist—as well as a major effort in computer simulations. That level of detail would be beyond the scope of this study even if it were possible.

A simplified analysis is used here which assumes a single roof structure for all low-slope roofs in the country. This consists of a steel deck with two 1-in. layers of insulation, a three-ply layer of built-up roofing, and a 1/2-in. layer of gravel on the outside. On the inside there is a suspended ceiling with a nonreflective air space between the steel deck and the acoustical ceiling tiles. A cross-section of this typical roof is shown in Fig. 14.1, and the thermal resistance (R-value) is given in Table 14.1.

It is assumed that the current technology is to use R-6.38/in. polyisocyanurate boards. This is an average of many products on the market which differ in structural properties and facing materials.[39] No distinction is made between the kinds of CFC-foam insulations used, because sufficiently accurate data are not available on the proportions and thicknesses of polystyrene, polyurethane, and polyisocyanurate that are used. The assumption that all the roofs affected use polyisocyanurate foams will tend to overstate the results since the R-values are

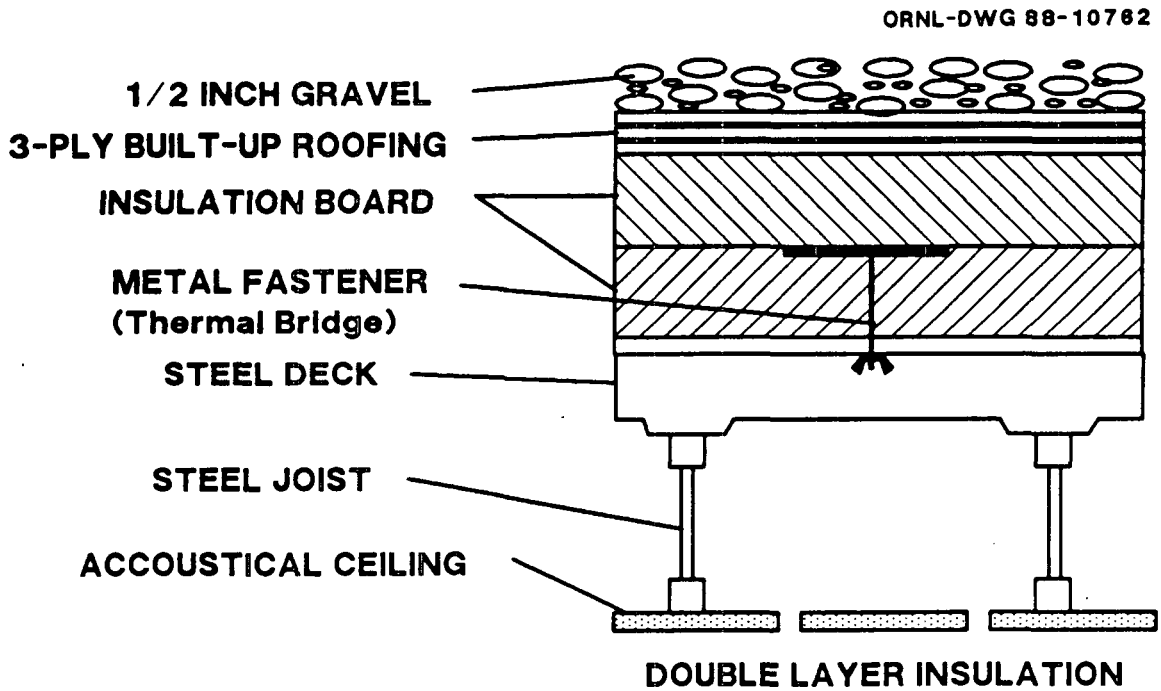

Fig. 14.1. Cutaway drawing of a built-up roof.

somewhat higher than actual values for EXPS, which are closer to 5.4/in., and its substitutes. EXPS is only a small amount of the market, primarily inverted roofs where moisture retention is a potential problem, and this simplification should not have a significant impact on the final results.

Table 14.1. Thermal resistance of a typical low-slope commercial roof

Description	R-value
Outside air	0.17
Built-up roofing	0.33
2 in. polyisocyanurate	12.76
Steel deck	
Air space	0.94
1/2 in. acoustical tile	1.25
Inside air	0.61
Total R-value	16.06

An additional assumption is made that the heating and cooling systems have primary energy efficiencies of 60%. This corresponds to a heat pump with a heating season COP of 2.0 and a heat pump or air conditioner with a cooling seasonal energy efficiency ratio (SEER) of 6.8. Detailed data are not available for the types or efficiencies of HVAC equipment installed in commercial buildings, and a thorough analysis would need to distinguish between large office buildings with high-efficiency centrifugal chillers and boilers and low-rise buildings with lower efficiency equipment. The heating efficiency assumed is a little lower than could be achieved with a gas or oil furnace and quite a bit higher than electric resistance heating. The cooling efficiency is lower than that for a centrifugal chiller or high-efficiency air conditioner but attainable by commercially available central and through-the-wall systems.

14.3 ALTERNATIVES CONSIDERED

14.3.1 Preferred Alternative

The preferred alternative to polyisocyanurate insulation is assumed to be a foam formed with HCFC-141b with an R-value that is 9% lower than the CFC-11 isocyanurate, R-5.85/in. (R. Crooker, Pennwalt Corp., private communication, September 1988). It is assumed that the same thickness of insulation is used which results in a roof R-value of 15.0.

14.3.2 Fallback Position

The fallback position in low-slope roofs is to use currently available building materials, EPS, or fiberglass boards. Both of these products can be used successfully, although methods of installation differ for the two. Each has an R-value of 4.0/in., and no distinction needs to be drawn between them in this analysis. The fallback position differs from the preferred and worst-case scenarios, though, in that it has been assumed that in some instances thicker, or additional, layers of insulation would be used to maintain a constant R-value for the roof. The design of a roof depends on the costs of materials, energy, and installation. An arbitrary decision has been made in this case that some people will chose to make thicker roofs.

It is not always possible to increase the thickness of the roof sufficiently to maintain the same R-value with EPS or fiberglass that would be possible with polyisocyanurate or polyurethane. The thickness is constrained by the clearance of equipment designed for rooftop installation as well as the means of mechanically fastening the materials to the steel or masonry deck. Where it might be feasible to increase the insulation from 2 to 3 in. in the South it is impractical to go from 3-1/2 to 6 in. of insulation in the North. Consequently, it is assumed that a constant thickness of insulation is used in place of CFC foams in the northern parts of the country (about 66% of the roof area) and a thicker layer of insulation to maintain a constant R-value is used elsewhere.[38]

14.3.3 Worst-Case Scenario

The worst-case scenario, which would have the highest energy impact, is a straight substitution of an equal thickness of EPS or fiberglass for CFC-blown foam insulations. Thus, 2 in. of R-4.0/in. insulation is used in place of 2 in. of R-6.38/in. foam which results in a roof R-value of 11.3 instead of R-16. Different installation techniques would be required for either of these substitutes than are used for the CFC foams. These would affect both the cost and thermal properties of the roof; EPS, for example, requires additional layers of materials above and below the insulation that increase the cost and also add some thermal resistance. These differences are acknowledged to exist but have not been considered in this analysis.

14.4 CALCULATIONAL PROCEDURE

The analysis of energy use for low-slope roofs is based on work done at Clemson University for the Building Thermal Envelope Systems and Insulating Materials program at ORNL.[38] Chang and Busching compiled an estimate of roofing area by federal regions and of the potential energy savings possible by increasing roof insulation. They did not have data on actual roof R-values, though, and did computer simulations of increased winter heat loss and summer heat gain for all roofs assuming constant R-values of 5.0, 6.25, 8.33, 12.5, and 25 for all low-slope roofs nationwide.

Results for the base case and three alternatives presented here are interpolated from data in the Clemson study for each of the ten federal regions used in that project. These are listed in Tables 14.2 and 14.3 with brief descriptive names applied to each region. Although these titles are generally correct, they cover broad areas and need to be used carefully. The "Pacific Coast"

Table 14.2. Estimated winter heat losses for roof options (billion Btu/year)

Region	Base case	Preferred alternative	Fallback position	Worst-case alternative
New England	13,107	14,055	18,724	18,724
New York	29,026	30,992	40,793	40,793
Mid-Atlantic	17,523	18,808	17,523	25,566
Southeast	10,838	11,711	10,838	15,973
Midwest	48,230	51,705	68,936	68,936
Southwest	5,135	5,625	5,135	7,988
Great Plains	6,432	6,802	9,441	9,441
Rocky Mountain	5,761	6,196	8,318	8,318
Pacific Coast	6,887	7,455	6,887	10,196
Northwest	7,371	7,878	7,371	10,455
Total	150,310	161,227	193,966	216,390

Table 14.3. Estimated summer heat gains for roof options (billion Btu/year)

Region	Base case	Preferred alternative	Fallback position	Worst-case alternative
New England	3,854	4,240	6,202	6,202
New York	7,371	8,118	12,099	12,099
Mid-Atlantic	9,143	9,975	9,143	14,204
Southeast	25,623	27,307	25,623	36,062
Midwest	15,990	17,509	25,228	25,228
Southwest	22,096	23,608	22,096	31,282
Great Plains	6,703	7,216	9,652	9,652
Rocky Mountain	2,672	2,909	4,127	4,127
Pacific Coast	20,797	22,231	20,797	29,401
Northwest	2,409	2,648	2,409	3,934
Total	116,658	125,761	137,376	172,192

is predominantly California, as would be expected, but also includes Arizona and Nevada. These are also "aggregate" numbers and reflect differences in total roof area in each region as well as variations in climate. Finally, the data used to generate the results in Tables 14.2 and 14.3 are from 1983 and represent 33 billion ft^2 of low-slope roof area. Values for the current building stock would be somewhat higher.

The projected increases in national energy use, the energy penalties associated with these three cases, that are derived from the data in Tables 14.2 and 14.3 are listed in Table 14.4. These show energy penalties of 0.03 quad/year for the preferred alternative, 0.11 quad/year for the fallback position, and 0.20 quad/year for the worst-case alternative.

14.5 COMMENTS AND CAVEATS

The results presented here depend on the assumed roof construction and the design R-value chosen. Fortunately, the choice of design R-value is not critical. Calculations were performed for each of the alternatives as substitutes for polyisocyanurate roof R-values of 7 to 25. Although the total energy use goes up or down for all the scenarios considered for different R-value assumptions, the energy-use penalties do not change a great deal. Figure 14.2 shows the energy penalties for the preferred, fallback, and worst cases for a broad range of base case design R-values. All three curves are fairly flat. In the worst case, if R-12 is more representative than the R-16 that was used in this analysis, the estimated energy penalty is 0.04 quad/year too low; if R-20 should have been used, it is 0.03 quad/year too high. The fallback and preferred alternatives are even less sensitive to the design R-value chosen.

Table 14.4. Energy-use impacts for low-slope roofs (10^9 Btu/year)

	Preferred alternative	Fallback option	Worst-case alternative
Increased winter heat loss	10,916	43,656	66,080
Increased summer heat gain	9,102	20,718	55,534
Total change in building loads	20,018	64,374	121,614
Total increased energy use, quads/year	0.03	0.11	0.20

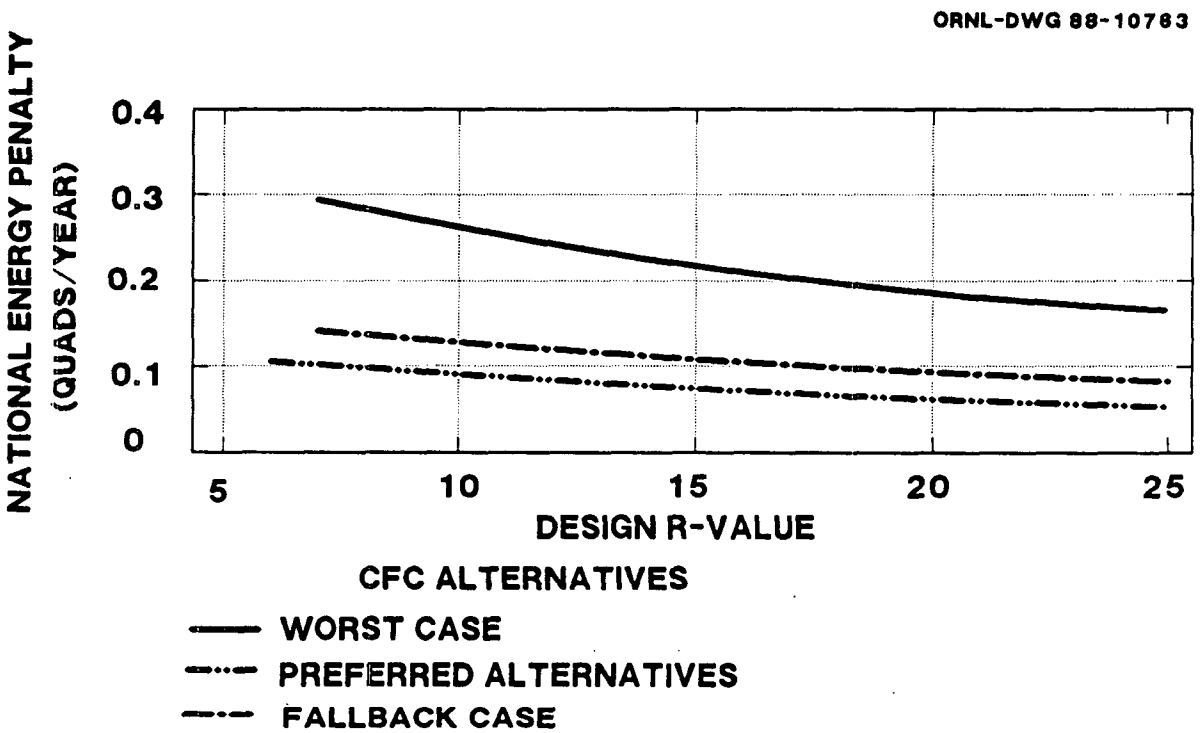

Fig. 14.2. Sensitivity of national energy penalties to variations in R-value.

15. CONCLUSIONS AND RECOMMENDATIONS

The results summarized in Table S.1 show that there could be significant energy-use impacts from CFC alternatives, but that the adverse impacts can be reduced or eliminated through successful research and development. The areas where major impacts are likely to occur, in order of importance, are (1) refrigerators and freezers, (2) the foundations of residential buildings, (3) the walls and roofs of commercial buildings, (4) mobile air-conditioning, and (5) gas and electric water heaters.

The most promising alternative refrigerants and foam insulation blowing agents that are being considered are HFC-134a, HCFC-123, and HCFC-141b. None of these can be used as a direct substitute for the CFC it would replace and none is as energy efficient as the CFC currently used. Further work is needed in the design of the refrigeration systems and in the foam formulations to keep the losses in thermal efficiency relative to CFC-12 and CFC-11 as small as possible. At the same time, however, effort needs to be directed toward identifying alternative chemicals and mechanical systems that are inherently more efficient than HFC-134a, HCFC-123, and HCFC-141b or perhaps even CFC-12 and CFC-11. Although some work has been done on azeotropic and nonazeotropic refrigerant mixtures, there are still many binary and ternary blends of environmentally safe refrigerants that could be evaluated as CFC alternatives. Likewise, there are opportunities for applying the Stirling cycle to high efficiency refrigerators and freezers and for developing high R-value vacuum insulating panels for use in appliances and buildings. The development of these new technologies represents an opportunity to use energy more efficiently while reducing the environmental threat posed by CFCs.

16. REFERENCES

1. *Montreal Protocol on Substances that Deplete the Ozone Layer*, United Nations Environment Programme, Final Act, September 1987.

2. Protection of Stratospheric Ozone: Final Rule and Proposed Rule, 40 CFR Pt. 82, *Federal Register*, V. 52, pp. 47486-523 Dec. 14, 1987.

3. F. A. Creswick, P. D. Fairchild, and J. E. Christian, *A Plan for Research and Development of Chlorofluorocarbon Alternatives for Refrigeration and Building Applications*, to be pubished, Oak Ridge National Laboratory, Oak Ridge, Tenn.

4. *Statistical Panorama*, p. 1-2 (April 1987).

5. *Draft Report: Chlorofluorocarbon Chemical Substitutes*, EPA Contract 68-02-3994, Work Assignment 80, Dec. 4, 1986.

6. *Development of a High Efficiency, Automatic Defrosting Refrigerator/ Freezer; Phase I—Design and Development, Final Report Volume II—Task Reports*, Arthur D. Little, Inc., ORNL/Sub-7255/2, Oak Ridge National Laboratory, Oak Ridge, Tenn., February 1980.

7. *AHAM Standard for Household Refrigerators and Household Freezers*, AHAM HRF-1, November 1985.

8. *Testing of Cryodynamics Cryogenic Cooler*, The University of Tennessee, November 1987.

9. W. T. Lawrence and F. E. Ruccia, *Development of Advanced Insulation for Appliances Task I*, Arthur D. Little, Inc., ORNL/Sub-81/13800/1, Oak Ridge National Laboratory, Oak Ridge, Tenn., June 1981.

10. Oral presentation at First National Conference on Appliance Efficiency, sponsored by the American Council for an Energy Efficient Economy, Oct. 26-28, 1987, Washington, D.C.

11. *Annual Energy Review 1986*, Energy Information Administration, p. 55.

12. "EPA Mileage Estimates: How Realistic?," *Automot. Eng.*, 86(12), p. 42 (1978).

13. J. R. Pierce, "The Fuel Consumption of Automobiles," *Sci. Am.* (January 1975).

14. "Parametric Tool Evaluates Auto Efficiency," *Automot. Eng.*, (December 1978).

15. ICI technical presentation and product literature, "Alternatives to CFC 12 in Mobile Air-conditioning," Conference on Substitutes and Alternatives to CFCs and Halons, sponsored by The Conservation Foundation, the U.S. Environmental Protection Agency, and Environment Canada, Washington, D.C., Jan. 13-15, 1988.

16. *Statistical Abstract of the United States—1987*, U.S. Department of Commerce, p. 585.

17. Copeland Corp., *Copeland Refrigeration Manual*, Part 4, Form No. AE-104, p. 19-3, Jan. 1, 1969.

18. *Regulating Impact Analysis: Protection of Stratospheric Ozone*, Vol. III: Addenda to the Regulatory Impact Analysis Document, Part 4A: "Refrigeration".

19. A. Perez, "Supermarkets and the Triangle for Energy Efficiency," *ASHRAE J.*, p. 39 (June 1977).

20. L. R. Ember, et al., "Tending the Global Commons," *Chem. & Eng. News*, p. 50 (Nov. 24, 1986).

21. *Regulatory Impact Analysis: Protection of Stratospheric Ozone*, Vol. III: Addenda to the Regulatory Impact Analysis Document, Part 4B: "Refrigeration," EPA Report, December 1987.

22. J. Lukasick, "Heavy Metal for Mass Appeal," *Beverage World*, p. 28 (January 1987).

23. *ASHRAE Handbook, 1979 Equipment*, p. 39.4.

24. M. Middleton and R. Sauber, *Research and Development of Energy Efficient High Back-Pressure Compressors*, ORNL/Sub/78-7229/5, Oak Ridge National Laboratory, Oak Ridge, Tenn., p. 65 (September 1983).

25. A. Vasilakis and J. Gerstmann, Advanced Mechanical Technology, Inc., *Development of a High-Efficiency Gas-Fired Water Heater, Phase II-Production Prototype Design and Development, Executive Summary and Task Reports*, ORNL/Sub/77-7381/3, p. 2.2-36, Oak Ridge National Laboratory, Oak Ridge, Tenn., April 1983.

26. A. Vasilakis and J. Gerstmann, Advanced Mechanical Technology, Inc., *Development of a High-Efficiency Gas-Fired Water Heater, Phase II-Production Prototype Design and Development, Executive Summary and Task Reports*, ORNL/Sub/77-7381/3, p. 1.0-8, Oak Ridge National Laboratory, Oak Ridge, Tenn., April 1983.

27. "National Appliance Energy Conservation Act of 1987," Public Law 100-12, March 17, 1987.

28. S. Ernst, "Screw Compressors: Many Benefits for Low Price Tag," *Air Cond., Heat., & Refrig. News*, p. 50, Jan. 18, 1988.

29. R. Ellis, "Carbon Dioxide Snow Effective Refrigerant for Frozen Foods in Long-Distance Rail Shipments," *Food Processing*, (December 1981).

30. L. Ember, et al., "Tending the Global Commons," *Chem. Eng. News*, p. 50 (Nov. 24, 1986).

31. *ASHRAE Handbook, Fundamentals 1981*, p. 20.24.

32. *ASHRAE Handbook, Applications 1982*, p. 43.9.

33. Thermo King TD-1 product literature, 1987.

34. *ASHRAE Handbook, Applications 1982*, p. 43.11.

35. S. Petersen and H. Fanney, "Technical and Economic Analysis of CFC-Blown Insulations and Substitutes for Residential and Commercial Construction," NBSIR 88-3829, U.S. Department of Commerce, National Bureau of Standards, July 1988.

36. LSI Systems, Inc., "Survey of Builder Usage of Building Materials for the Construction of New Houses: Sheathing," Crofton, Md, August 1986.

37. J. Christian, *Impact of CFC Restrictions on U.S. Building Foundation Thermal Performance*, ORNL/CON-245, Oak Ridge National Laboratory, Oak Ridge, Tenn., December 1987.

38. T.-C. Chang and H. W. Busching, *Energy Savings Potential of Roofing Research*, ORNL/Sub/82-22293/1, p. 28, Oak Ridge National Laboratory, Oak Ridge, Tenn., December 1983.

39. *Roofing Materials Guide*, Vol. 12, February 1988, National Roofing Contractors Association,.

Appendix A.

CHLOROFLUOROCARBONS AND STRATOSPHERIC OZONE

Ozone in the atmosphere can both contribute to and detract from our quality of life. Ozone builds up in the lower levels of the atmosphere, the troposphere, to levels far above the natural background because of automobile exhaust and industrial processes and is a major factor in air pollution around urban areas. Ozone in the stratosphere, however, absorbs ultraviolet (uv) radiation and shields the surface of the earth from unacceptably high uv levels. Oxygen and ozone absorb most of the sun's uv radiation in wavelengths less than about 300 nanometers (nm), but only the ozone absorbs uv radiation in the 280- to 320-nm range,[1] what is called the uv-B region. There is evidence that increased exposure to uv-B radiation causes health problems in people and animals and reduced yields in agricultural and marine food products. Research into these adverse effects is incomplete, the findings to date are still controversial, and much work remains to be done in this area. The whole issue may still be surrounded by uncertainty, but the effects of increased uv exposure are so threatening and the consequences of delaying policy decisions so unacceptable, that decisions must be made and are being made, in spite of a lack of full understanding in this complex subject.

The chemistry of the stratosphere in general, and ozone in particular, is not thoroughly understood. Oxygen is known to exist in three chemical forms in the stratosphere; atomic oxygen (O), molecular or diatomic oxygen (O_2), and triatomic oxygen or ozone (O_3). The first theoretical model of stratospheric ozone chemistry was proposed by Chapman in the 1930s.[2] In this model, diatomic oxygen absorbs solar radiation in wavelengths below 250 nm and dissociates to form atomic oxygen, as represented by Eq. (A.1). Unfortunately, this is outside the range of the harmful uv-B radiation (280-320 nm). Atomic and diatomic oxygen can then form ozone in a reaction with either another oxygen atom or a nitrogen atom. This is shown in Eq. (A.2), where M is either O or N. Ozone in turn is dissociated by radiation of wavelengths greater than 250 nm, as shown in Eq. (A.3), where $h\nu$ is the solar radiation.

$$O_2 + h\nu = O + O \tag{A.1}$$

$$O_2 + O + M = O_3 + M \tag{A.2}$$

$$O_3 + h\nu = O_2 + O \tag{A.3}$$

A fourth reaction can occur in which ozone and atomic oxygen combine to form two diatomic oxygen molecules, Eq. (A.4).

$$O_3 + O = O_2 + O_2 \tag{A.4}$$

It is because of the reaction in Eq. (A.3) that the earth is shielded from uv-B radiation.

In the 1950s and 1960s, it was found that the Chapman system overestimated the amount of "odd oxygen," O and O_3, in the stratosphere[2] and that additional but unidentified reactions were also occurring. One of the first reactions to be investigated to resolve the discrepancy between the Chapman model and observations was the interaction of odd hydrogen species (HO_x) with odd oxygen, as shown in Eqs. (A.5) and (A.6). Additional reactants were considered in the 1960s, with investigations focusing on nitrogen oxide (NO_x), Eqs. (A.7) and (A.8).

$$OH + O_3 = HO_2 + O_2 \tag{A.5}$$

$$HO_2 + O = OH + O_2 \tag{A.6}$$

and

$$NO + O_3 = NO_2 + O_2 \tag{A.7}$$

$$NO_2 + O = NO + O_2 \tag{A.8}$$

Stratospheric chemistry was found to be even more complicated, however, and modern models of atmospheric ozone now include more than 150 different chemical reactions[3] and are beginning to consider both chemical and meteorological factors.

STRATOSPHERIC CHLORINE LINK TO CHLOROFLUOROCARBONS

Of all the compounds in the stratosphere contributing to ozone depletion, chlorine is the only one that is almost completely man-made and consequently amenable to controls (there is some atmospheric chlorine that occurs naturally in the form of $CHCl_3$, but recent increases almost certainly come from man-made chemicals). Atmospheric chlorine results primarily from human sources, it comes from a single industry, and unlike agriculture and combustion of fossil fuels, comes from applications in which alternate technologies exist or can be developed.

Stratospheric chlorine has been traced to a family of compounds called chlorofluorocarbons (CFCs). These chemicals, especially the fully halogenated CFCs (all chemical bonds are with fluorine, chlorine, bromine, or iodine), are particularly harmful to the stratospheric ozone because they have such a long "lifetime" in the atmosphere. They are chemically inert; that is, they do not react readily with other compounds, and rise unchanged in the atmosphere to an altitude of 8 to 30 miles, where they eventually photolytically decompose and release chlorine atoms. The CFCs which are not fully halogenated are not as great a problem as the fully halogenated compounds. They are distinguished by as few as a single hydrogen atom (e.g., HCFC-22, CHF_2Cl), they are not as inert as the fully halogenated species, and they break down in the lower levels of the atmosphere because of the weak hydrogen-carbon bonds. Fully halogenated CFCs (e.g., CFC-11, $CFCl_3$, and CFC-12, CF_2Cl_2) are relatively inert in the lower atmosphere and can traverse to the stratosphere unchanged. This process of rising to the stratosphere is estimated to take about 2 years (ref. 2). Once out of the troposphere, photolysis occurs in which uv radiation dissociates the CFC and releases free chlorine into the stratosphere [the reactions for CFC-11 ($CFCl_3$) and CFC-12 (CF_2Cl_2) are shown in Eq. (A.9) and (A.10)] (ref. 2).

$$CFCl_3 + h\nu = CFCl_2 + Cl \quad (A.9)$$

$$CF_2Cl_2 + h\nu = CF_2Cl + Cl \quad (A.10)$$

The free chlorine atoms serve as catalysts for odd oxygen (O and O_3), in the following sequence of reactions, (A.11, A.12), which depletes the ozone layer, as shown in Eqs. (A.11) and (A.12).

$$Cl + O_3 = ClO + O_2 \quad (A.11)$$

$$ClO + O = Cl + O_2 \quad (A.12)$$

In the reaction shown in Eq. (A.11), an ozone molecule dissociated. In the reaction shown in Eq. (A.12), a monatomic oxygen is also removed from the atmosphere. This second reaction prevents the formation of a new ozone molecule by the reaction in Eq. (A.2). Unfortunately, the absorption of uv radiation in Eqs. (A.9) and (A.10) does not affect the same wavelengths as the reaction in Eq. (A.3); hence, they do not provide any shielding of uv-B radiation. Furthermore, the free chlorine atoms released in Eqs. (A.9) and (A.10) are not consumed in the reactions in Eqs. (A.11) and (A.12) but remain in the atmosphere to aid in the destruction of further ozone molecules. The fully halogenated CFCs have an average lifetime in the atmosphere of 75 to 150 years (ref. 4). The chlorine and chlorinated compounds eventually drop out of the ozone depletion cycle by either forming stable substances or by creating water-soluble compounds that dissolve in the rainwater and fall to the earth (mainly as HCl).[1]

REFERENCES

1. *Chem. Eng. News*, p. 32, (Nov. 24, 1986).

2. Elliot, Scott, and Rowland, F. S., "Chlorofluorocarbons and Stratospheric Ozone," *J. Chem. Educ.*, **64**(5), p. 387 (1987).

3. Mills, J. F. D., "The Ozone Issue: A Review of Recent Scientific and Political Developments," *Cellular Polymers*, **5**, pp. 343-55 (1986).

4. B. A. Thrush, "Atmospheric Effects of Halocarbons," *Int. Cong. Refrig. (Venice 1979), Proc.*, Vol. II.

Appendix B

THERMODYNAMIC CYCLE CALCULATIONS

INTRODUCTION

The thermodynamic calculations in this section are performed using data published by DuPont,[1-4] Canjar and Manning,[5] and provided informally by Allied-Signal (Ted Atwood, Allied-Signal, Inc., private communication). The computed coefficients of performance (COPs) for HFC-134a are derived from the tables provided by Allied-Signal and include corrections to adjust between theoretical and observed performance. Vineyard and Sand of Oak Ridge National Laboratory (ORNL) have taken measurements on a refrigerator/freezer operating with CFC-12 and HFC-134a (both tests used a lubricant appropriate for HFC-134a), and they measured an 8.6% increase in daily energy use for the refrigerator using HFC-134a (Edward Vineyard, ORNL, private communication). This is a significant difference which might be reduced by changes in the design of the expansion device, compressor, or heat exchangers.

In Tables B-1 through B-6, COP = coefficient of performance and EER = energy efficiency ratio.

REFRIGERATOR/FREEZERS AND HOUSEHOLD FREEZERS

Temperatures:

Condensing	130°F
Evaporating	-5°F
Liquid	90°F
Return Gas	90°F

Efficiencies:

Compressor	60%
Motor	80%

Other Considerations:

Calculations for HFC-134a include a 5% reduction in COP to reflect recent experimental results at ORNL.

Table B.1. COP of a household refrigerator/freezer and freezer

	Enthalpy of refrigerant (Btu/lbm)			
Location	CFC-12	HFC-134a	HCFC-22	Ammonia
Evaporator inlet	28.71	40.73	36.16	-1230.8
Compressor inlet	90.60	120.48	119.06	-718.5
Compressor exit	135.13	180.79	182.92	-256.2
Condenser exit	28.71	40.73	36.16	-1230.8
COP	1.39	1.32	1.30	1.11
EER (Btu/W-h)	4.74	4.51	4.53	3.78

MOBILE AIR CONDITIONERS

Temperatures:

Condensing	150°F
Evaporating	40°F
Liquid	130°F
Return Gas	65°F

Efficiencies:

Compressor	65%
Motor	not applicable available

Other Considerations:

Calculations for propane include a 10% reduction in COP due to the use of a secondary heat exchanger to keep the refrigerant out of the passenger compartment. Calculations for HFC-134a include a 5% reduction in COP to reflect recent experimental results at ORNL.

Table B.2. COP of a mobile air conditioner

	Enthalpy of refrigerant (Btu/lbm)			
Location	CFC-12	HFC-134a	HCFC-22	Propane
Evaporator Inlet	38.55	55.24	49.06	290
Compressor Inlet	85.37	113.02	112.54	400
Compressor Exit	105.33	138.20	140.74	454
Condenser Exit	38.55	55.24	49.06	290
COP	2.35	2.19	2.25	2.01
EER (Btu/W-h)	8.01	7.44	7.68	6.86

BEVERAGE VENDING MACHINES

Temperatures:

Condensing	110°F
Evaporating	5°F
Liquid	95°F
Return Gas	95°F

Efficiencies:

Compressor	62.5%
Motor	80%

Other Considerations:

Calculations for HFC-134a include a 5% reduction in COP to reflect recent experimental results at ORNL.

Table B.3. COP of a beverage vending machine

	Enthalpy of refrigerant (Btu/lbm)			
Location	CFC-12	HFC-134a	HCFC-22	Ammonia
Evaporator Inlet	29.90	42.48	37.70	-1226.5
Compressor Inlet	91.15	121.27	119.54	-717.9
Compressor Exit	151.11	163.88	166.50	-425.1
Condenser Exit	29.90	42.48	37.70	-1226.5
COP	1.85	1.76	1.74	1.74
EER (Btu/W-h)	6.33	6.00	5.95	5.93

BEVERAGE VENDING MACHINES

Temperatures:

Condensing	110°F
Evaporating	5°F
Liquid	95°F
Return Gas	95°F

Efficiencies:

Compressor	62.5%
Motor	80%

Other Considerations:

Calculations for HFC-134a include a 5% reduction in COP to reflect recent experimental results at ORNL.

Table B.3. COP of a beverage vending machine

	Enthalpy of refrigerant (Btu/lbm)			
Location	CFC-12	HFC-134a	HCFC-22	Ammonia
Evaporator Inlet	29.90	42.48	37.70	-1226.5
Compressor Inlet	91.15	121.27	119.54	-717.9
Compressor Exit	151.11	163.88	166.50	-425.1
Condenser Exit	29.90	42.48	37.70	-1226.5
COP	1.85	1.76	1.74	1.74
EER (Btu/W-h)	6.33	6.00	5.95	5.93

RETAIL REFRIGERATION

Low Operating Range

Temperatures:

Condensing	110°F
Evaporating	0°F
Liquid	110°F
Return Gas	65°F

Efficiencies:

Compressor	65%
Motor	80%

Other Considerations:

Calculations for HFC-134a include a 5% reduction in COP to reflect recent experimental results at ORNL.

Table B.4. COP of a low-temperature retail refrigeration unit

Location	Enthalpy of refrigerant (Btu/lbm)			
	HCFC-502	HFC-134a	HCFC-22	Ammonia
Evaporator Inlet	40.63	47.82	42.45	-1213.1
Compressor Inlet	88.43	115.05	114.83	-727.9
Compressor Exit	119.80	159.62	160.30	-439.4
Condenser Exit	40.63	47.82	42.45	-1213.1
COP	1.52	1.55	1.59	1.68
EER (Btu/W-h)	5.20	5.30	5.43	5.74

Medium Operating Range

Temperatures:

Condensing	130°F
Evaporating	20°F
Liquid	115°F
Return Gas	95°F

Efficiencies:

Compressor	65%
Motor	80%

Other Considerations:

Calculations for HFC-134a include a 5% reduction in COP to reflect recent experimental results at ORNL.

Table B.5. COP of a medium-temperature retail refrigeration unit

Location	Enthalpy of refrigerant (Btu/lbm)			
	HCFC-502	HFC-134a	HCFC-22	Ammonia
Evaporator Inlet	42.19	49.64	44.07	-1208.4
Compressor Inlet	92.80	120.74	118.91	-719.9
Compressor Exit	122.51	159.68	161.96	-477.0
Condenser Exit	42.19	49.64	44.07	-1208.4
COP	1.70	1.73	1.74	2.01
EER (Btu/W-h)	5.81	5.92	5.93	6.86

RETAIL REFRIGERATION (continued)

High Operating Range

Temperatures:

Condensing	130°F
Evaporating	45°F
Liquid	115°F
Return Gas	95°F

Efficiencies:

Compressor	65%
Motor	80%

Other Considerations:

Calculations for HFC-134a include a 5% reduction in COP to reflect recent experimental results at ORNL.

Table B.6. COP of a high-temperature retail refrigeration unit

Location	Enthalpy of refrigerant (Btu/lbm)			
	HCFC-502	HFC-134a	HCFC-22	Ammonia
Evaporator Inlet	42.19	49.64	44.07	-1208.4
Compressor Inlet	91.48	119.46	117.44	-725.4
Compressor Exit	111.77	146.36	146.85	-558.1
Condenser Exit	42.19	49.64	44.07	-1208.4
COP	2.43	2.47	2.50	2.89
EER (Btu/W-h)	8.29	8.42	8.52	9.85

REFERENCES

1. "Thermodynamic Properties of Freon 12 Refrigerant," publication A-95602 10-73 5M, E. I. DuPont de Nemours and Co., Inc.

2. "Thermodynamic Properties of Freon 12 Refrigerant: Superheat Tables," publication A-88435 2M 8-73, E. I. DuPont de Nemours and Co., Inc.

3. "Thermodynamic Properties of Freon 22 Refrigerant," publication A-84528 2-75 3M, E. I. DuPont de Nemours and Co., Inc.

4. "Thermodynamic Properties of Freon 502 Refrigerant," publication 8-69 10M, E. I. DuPont de Nemours and Co., Inc.

5. L. N. Canjar and F. S. Manning, *Thermodynamic Properties and Reduced Correlations for Gases*, Gulf Publishing Co., Houston, 1967.

Appendix C

INCREASED BUILDING LOADS FOR RESIDENTIAL BUILDINGS (WALLS)

INTRODUCTION

Hunter Fanney and Steve Petersen of the National Bureau of Standards investigated the increased energy use likely to occur due to substituting a non-CFC sheathing material for CFC-blown foam sheathings used in residential construction.[1] Their conclusion is that in most cases there is an economic justification (on a life cycle cost basis) for using a thicker material with a higher thermal conductivity in place of the EXPS and isocyanurate CFC-blown insulations. The best substitute available, in terms of R-value/inch per dollar, is expanded polystyrene insulation board (EPS).

The work presented in this report draws upon what was done by Fanney and Petersen but uses the less optimistic assumption that builders would substitute an equal thickness of an alternative material for the CFC-foams instead of a thicker layer. The results, then, in a sense represent the upper limit for the energy impact that is likely to occur.

CALCULATIONAL PROCEDURE

This calculation is primarily a large bookkeeping chore with a lot of details to follow but very little elucidating information. The energy impacts in the end are small, only 0.05 quad/year in the worst case. Consequently, this appendix just points out the direction of the calculations rather than listing all 48 tables of intermediate results. Further information and the results are contained in Sect. 11 of this report.

The analysis is performed for single- and multifamily dwellings according to the type of heating system, geographic region of the country, type of sheathing material, and thickness of sheathing. The NBS study cited data for 1986 new building starts (the most recent year for which data are available) for each.[1] Table C.1 lists the use of natural gas and fuel oil furnaces, heat pumps, and electric resistance heat by region of the country. The use of "conventional" EXPS and isocyanurate sheathings are listed in Table C.2, based on percent of total wall area constructed, and corresponding data on the thicknesses of CFC-blown sheathings are given in Table C.3. These numbers had to be grouped into broader categories and averaged to get information for regions corresponding to those used for the types of heating systems.

Table C.1. Percentage of new construction of single-family homes by heating system

Geographic region	Natural gas	Oil	Heat pumps	Electric resistance
Northeast	44	25	15	16
Midwest	82	0	9	9
South	32	0	47	21
West	69	0	20	11

Table C.2. Use of sheathing materials in new construction of single-family homes by geographic region (%)

Census region	Extruded polystyrene (CFC-12 foam)	Isocyanurate (CFC-11 foam)	Conventional fiberboard	Total
Northeast	4	0	96	100
Mid-Atlantic	5	22	73	100
East North Central	19	20	61	100
West North Central	24	5	71	100
South Atlantic	14	9	77	100
East South Central	15	15	70	100
West South Central	19	15	66	100
Mountain	30	12	58	100
Pacific	5	5	90	100
U.S. average	14	12	74	100

Table C.3. Thickness of CFC-blown sheathings in new construction of single-family homes by geographic region (%)

	Extruded polystyrene thickness of sheathing (inches)					Isocyanurate thickness of sheathing (inches)				
Census region	0.5	0.625	0.75	1.0	Other	0.5	0.625	0.75	1.0	Other
Northeast	0	15	0	85	0	0	51	22	11	16
Mid-Atlantic	10	11	2	75	2	74	19	2	5	0
East North Central	15	6	24	52	3	46	7	24	21	2
West North Central	13	28	37	21	1	19	33	34	12	2
South Atlantic	50	22	23	5	0	64	1	34	1	0
East South Central	30	29	34	7	0	62	5	29	4	0
West South Central	56	7	19	17	1	73	4	6	3	14
Mountain	2	5	5	88	0	18	5	9	68	0
Pacific	14	6	3	41	36	0	0	8	88	4
U.S. Average	29	14	19	36	2	56	8	18	15	3

Hunter Fanney estimated the increased energy use of a single-family home (1600 ft^2 with 1360 ft^2 of opaque wall area) for the heating and cooling seasons resulting from using 0.5-in. EPS in place of 0.5-in. EXPS for twelve different cities. He did this using the PEAR (Program for Energy Analysis in Residences) developed at Lawrence Berkeley Laboratory for the U.S. Department of Energy. The numbers presented in Table C.4 are his results for electric resistance heat and air conditioning, although he also computed results for gas and oil furnaces and for heat pumps. These are "site" energy use and are not primary energy use.

In these tables, the data for the twelve cities were grouped and averaged to get representative numbers for the four regions in Table C.1. Similar tables of energy penalties were then computed for substituting equal thicknesses of 0.625-, 0.75-, and 1.0-in. EPS for the same thicknesses of EXPS and isocyanurate. This was done by scaling the NBS data for energy losses with 0.5-in. sheathings by the ratio of the total wall R-value with 0.5-in. sheathing to the total wall R-value with the thicker sheathing.

The distribution of new housing completions in 1986 by region of the country and by heating system are used to represent the future distribution of single-family homes. These data, which are listed in Table C.5, can be used with the information in Tables C.1 through C.4 to estimate the increased energy use (energy penalties) associated with using non-CFC sheathings in a single year's new construction. The total can be scaled to the desired new housing population, 59.3 million homes, to get the future impact when there has been a complete turnover of housing. A similar analysis is performed for 37.3 million multifamily homes.

Table C.4. Increased energy use due to substituting 0.5 in. of EPS for 0.5 in. of EXPS (CFC-12 foam) or 0.5 in. of isocyanurate in a single-family home

	Heating Season (million Btu/year)		Cooling Season (million Btu/year)	
City	Extruded polystyrene	Isocyanurate	Extruded polystyrene	Isocyanurate
Boston	0.32	1.10	0.01	0.02
Washington	0.26	0.92	0.01	0.03
Atlanta	0.20	0.60	0.10	0.04
Orlando	0.03	0.10	0.03	0.10
Minneapolis	0.44	1.53	0.01	0.03
Kansas City	0.26	0.99	0.01	0.05
Dallas	0.13	0.45	0.03	0.10
Denver	0.33	1.16	0.00	0.03
Phoenix	0.08	0.26	0.06	0.20
Seattle	0.29	1.00	0.00	0.01
Oakland	0.16	0.56	0.00	0.00
Los Angeles	0.08	0.28	0.00	0.00

Table C.5. Housing completions in 1986 by region and heating system type

Heating System	Northeast	Midwest	South	West
Natural Gas	80	132	153	162
Oil	47	0	0	0
Heat Pump	28	15	231	47
Electric Resistance	30	15	104	27

REFERENCE

1. S. Petersen and H. Fanney, "Technical and Economic Analysis of CFC-Blown Insulations and Substitutes for Residential and Commercial Construction," NBSIR 88-3829, U.S. Department of Commerce, National Bureau of Standards, July 1988.

Appendix D

FOUNDATION INSULATION

Data for the energy impact of CFC restrictions on residential foundation insulation are derived from information in ORNL/CON-245 by Jeff Christian.[1] That report included a finite element analysis of the energy losses through the foundations of assumed "typical" single- and multifamily homes depending on the type of foundation (i.e., basement, crawlspace, or slab-on-grade) and the geographic region for a typical year's weather. The potential energy savings from foundation insulation are computed by doing a similar analysis for each building using optimal levels of insulation and comparing these reduced losses with those for the uninsulated foundation (Christian looked at both optimal insulation levels based on the proposed ASHRAE 90.2 and at the levels of insulation currently used; this report is concerned with only the optimal levels). The energy penalties from CFC restrictions, then, are due to the reduced potential energy savings in the future because CFC-12 blown EXPS insulation may not be available.

The data for each type of home are combined with information on the average number of new building starts in each region of the country, and for each type of foundation, to get an estimate of the potential energy savings nationwide due to foundation insulation in one year of new construction. These results are presented in Tables 15 and 16 of CON-245 for 1.07 million single- and 630,000 multifamily homes. The analysis for this study used those data to derive energy penalties for a complete turnover of the housing stock (i.e., 59.3 million single- and 37.3 million multifamily homes) for each of the four scenarios considered:

1. a base case which uses EXPS and fiberglass batts,

2. a preferred alternative using fiberglass batts and alternative materials that are thermally equivalent to EXPS,

3. a fall-back position where fiberglass batts are used wherever possible in place of EXPS, and

4. a worst-case scenario where fiberglass batts continue to be used in the same proportion of foundations where they are already used (e.g., 85% of insulated basement walls) but not substituting anything where EXPS would be used (e.g., 15% of insulated basements).

Christian noted in his report that fiberglass batts could be used in place of EXPS in every situation except along the slab-edge of slab-on-grade construction and give the same, or better, thermal performance. The trend has been away from using fiberglass because of potential problems with moisture condensation on the inside of the wall and the potential resulting moisture damage to the building. EXPS also has benefits not provided by fiberglass batts in terms of a tighter seal of the structure against radon penetration and by reducing damage from the freezing and thawing of the foundation. Although these are considerations in determining the type of foundation insulation used if both EXPS and fiberglass

are available, they have not been considered in the four scenarios evaluated in this study.

Table D.1 gives the potential energy savings from foundation insulation for each of the four cases listed above for an average year's new housing starts (1.07 million single-family and 630,000 multi-family homes). The first two rows of data in this table are taken directly from the last two rows of data in Table 15 of Christian's report. It is advantageous in that study to distinguish between the potential energy savings using current, or existing, construction practices and the additional savings from following ASHRAE 90.2. The same distinction has been maintained in Table D.1 for the sake of consistency, although the totals are all that are really of interest here.

Table D.1. Potential energy savings from foundation insulation for one year of new construction single-family homes (trillion Btu/year)

	Basement		Crawlspace		Slab-	
	Wall	Floor	Wall	Floor	edge	Total
Base case						
Existing	4.8	1.3	0.86	0.4	0.79	8.15
Additional	8.4	0	1.5	0	1.4	11.3
Total	13.2	1.3	2.4	0.4	2.2	19.5
Equivalent materials						
Existing	4.8	1.3	0.86	0.4	0.79	8.15
Additional	8.4	0	1.5	0	1.4	11.3
Total	13.2	1.3	2.4	0.4	2.2	19.5
Substitute fiberglass						
Existing	4.8	1.3	0.86	0.4	0	7.4
Additional	8.4	0	1.5	0	0	9.9
Total	13.2	1.3	2.4	0.4	0	17.3
No substitute for foam						
Existing	4.1	1.3	0.73	0.4	0	6.5
Additional	7.1	0	1.3	0	0	8.4
Total	11.2	1.3	2.0	0.4	0	14.9

Although the first three rows of Table D.1 pertain to the current technology, the next three sets of three rows each correspond to the cases considered as alternatives to the base case. Obviously there is no difference between the base case and the scenario where thermally equivalent materials made with HFC-134a, drainage board, or fiberglass are used in place of the EXPS foam insulation. The next case considered has almost the same data as the first two

with the exception of the energy savings from insulating around the edge of slab-on-grade construction. Fiberglass is unlikely to be used as a substitute in that case, as has already been noted, and consequently there are no possible energy savings there from slab-edge insulation in this case. The numbers for basements and crawlspaces are the same because fiberglass can be used there to give a wall that is thermally equivalent to, or better, than one insulated with EXPS.

The final set of figures in Table D.1 corresponds to the worst case where homes that would have been built with extruded polystyrene foundation insulation do not insulate the foundation at all if CFC-12 blown foam is not available. In this instance the energy savings from basement and crawlspace walls is only 85% of what it would be if both fiberglass and EXPS were available, because 85% of those walls are insulated with fiberglass batts. There are no possible savings from the 15% of basements and crawlspaces that would have used EXPS in this case.

Table D.2 is similar to Table D.1 except that the numbers are based on the multifamily dwelling data from Table 16 in CON-245.

These results for a single year's new construction are summarized in Table D.3. The energy penalty associated with each of the alternative scenarios that do not use CFC-blown foam insulation appears in the last row of the table. This has been computed by subtracting the potential energy savings for each alternative scenario from the energy savings possible in the base case using CFC-blown foam. These are the energy penalties associated with 1.07 million single-family and 630,000 multifamily homes. Table D.4 contains corresponding data for the desired population of 59.3 million single-family and 37.3 million multifamily homes. These numbers are derived simply by multiplying the data in Table D.3 by the corresponding ratios (i.e., 59.3/1.07 or 37.3/0.63).

Table D.2. Potential energy savings from foundation insulation for one year of new construction of multifamily homes (trillion Btu/year)

	Basement		Crawlspace		Slab-	
	Wall	Floor	Wall	Floor	edge	Total
Base case						
Existing	0.59	0.30	0.16	0.12	0.26	1.43
Additional	0.90	0	0.40	0	0.40	1.70
Total	1.49	0.30	0.56	0.12	0.66	3.13
Equivalent materials						
Existing	0.59	0.30	0.16	0.12	0.26	1.43
Additional	0.90	0	0.40	0	0.40	1.70
Total	1.49	0.30	0.56	0.12	0.66	3.13
Substitute fiberglass						
Existing	0.59	0.30	0.16	0.12	0	1.17
Additional	0.90	0	0.40	0	0	1.30
Total	1.49	0.30	0.56	0.12	0	2.47
No substitute for foam						
Existing	0.50	0.30	0.14	0.12	0	1.06
Additional	0.76	0	0.34	0	0	1.10
Total	1.26	0.30	0.48	0.12	0	2.16

Table D.3. Potential energy savings from foundation insulation for four scenarios of insulating materials for one year's new construction (trillion Btu/year)

	Base case	Equivalent materials	Fiberglass	No substitute
Single-family homes				
Existing standards	8.2	8.2	7.4	6.5
Additional from ASHRAE 90.2	11.3	11.3	9.9	8.4
Multifamily homes				
Existing standards	1.4	1.4	1.2	1.1
Additional from ASHRAE 90.2	1.7	1.7	1.3	1.1
Total	22.6	22.6	19.8	17.1
Energy penalty relative to base case	*	0	2.8	5.5

Table D.4. Potential energy savings from foundation insulation for four scenarios of insulating materials for complete turnover of housing (trillion Btu/year)

	Base case	Equivalent materials	Fiberglass	No substitute
Single-family homes				
Existing standards	454	454	410	360
Additional from ASHRAE 90.2	626	626	586	497
Multifamily homes				
Existing standards	78	78	67	61
Additional from ASHRAE 90.2	94	94	77	65
Total	1252	1252	1140	984
Energy penalty relative to base case				
Trillion Btu/year	*	0	168	324
Quads/year	*	0	0.17	0.32

REFERENCE

1. J. Christian, *Impact of CFC Restrictions on U.S. Building Foundation Thermal Performance*, ORNL/Sub/82-22293/1, p. 28, Oak Ridge National Laboratory, Oak Ridge, Tenn., December 1983.

INTERNAL DISTRIBUTION

1. M. R. Alley
2. V. D. Baxter
3. J. L. Bledsoe
4. M. A. Brown
5. R. S. Carlsmith
6. F. C. Chen
7. J. E. Christian
8. G. E. Courville
9. T. R. Curlee
10-34. S. K. Fischer
35. W. Fulkerson
36. C. W. Hagan
37. E. L. Hillsman
38. R. B. Honea
39. D. R. James
40. D. W. Jones
41. J. O. Kolb
42. M. A. Kuliasha
43. L. N. McCold
44. V. C. Mei
45. J. T. Miller
46. W. A. Miller
47. W. R. Mixon
48. J. C. Moyers
49. H. Perez-Blanco
50. C. H. Petrich
51. S. Rayner
52. J. H. Reed
53. D. E. Reichle
54. L. W. Rickert
55. E. T. Rogers
56. R. M. Rush
57. I. Sauers
58. M. Schweitzer
59. G. G. Stevenson
60. T. K. Stovall
61. E. Szarleta
62. J. J. Tomlinson
63. D. Waddle
64. Central Research Library
65. Document Reference Section
66-68. Laboratory Records
69. Laboratory Records--Record Copy

EXTERNAL DISTRIBUTION

70. Tad Addy, University of Illinois, Department of Mechanical and Industrial Engineering, College of Engineering, 140 Mechanical Engineering Building, 1206 West Green Street, Urbana, Illinois 61801
71. Kent Anderson, Private Consultant, 5602 Vernon Place, Bethesda, Maryland 20817
72. Clint Andrews, Massachusetts Institute of Technology, Department of Urban Studies and Planning, Room 7-338, Cambridge, Massachusetts 02139
73. Ted Atwood, Allied-Signal, Inc., Fluorochemicals, 20 Peabody Street, Buffalo, New York 14210
74. Lorraine Aulisio, Celotex Corporation, Building Products Division, 1500 N. Dale Mabry, Tampa, Florida 33607
75. Jim Baker, Harrison Radiator Division, General Motors, Alternate Refrigerant Group, A&E Building, Lockport, New York 14094
76. Sarup Bakhshi, Admiral Home Appliances, Monmouth Boulevard, Galesburg, Illinois 61401
77. Chinmoy Banerjee, Admiral Home Appliances, Advance Technology, Monmouth Boulevard, Galesburg, Illinois 61401
78. Gert Baumann, Mobay Corporation, Mobay Road, Pittsburgh, Pennsylvania 15205
79. Sam Beach, White Consolidated Industries, Inc., W.C.I. Refrigerator Division, 635 West Charles Street, Greenville, Michigan 48838
80. Debkumar Bhattacharjee, Dow Chemical, 410 Sackett Point Road, North Haven, Connecticut 06473
81. Ross Bisplinghoff, Raytheon Company, 63 2nd Street, Burlington, Massachusetts 01803

82. Don Bivens, E. I. DuPont De Nemours & Company, Freon Office (H), Chambers Works, Deep Water, New Jersey 08023
83. Ray Bohman, Amana Refrigeration, Inc., Amana, Iowa 52204
84. Larry Bolfik, Ford Motor Company, Climate Control Division, 17000 Rotunda Drive, Room B275, Dearborn, Michigan 48121
85. Arnold Braswell, Air Conditioning and Refrigeration Institute, 1501 Wilson Boulevard, Suite 600, Arlington, Virginia 22209
86. Robert Budge, White Consolidated Industries, Inc., W.C.I. Refrigerator Division, 635 West Charles Street, Greenville, Michigan 48838
87. Clark Bullard, University of Illinois, Office of Energy Research, 901 South Matthews Avenue, Urbana, Illinois 61801
88. Eileen Claussen, Environmental Protection Agency, Office of Program Development, Office of Air and Radiation, 401 M Street, SW, ANR-445, Washington, DC 20460
89. Roy Crawford, University of Illinois, Department of Mechanical and Industrial Engineering, College of Engineering, 144 Mechanical Engineering Building, 1206 West Green Street, Urbana, Illinois 61801
90. Jim Crawford, The Trane Company, 6200 Troup Highway, Tyler, Texas 75711
91. Joe Creazzo, E. I. DuPont De Nemours & Company, "Freon" Products Laboratory, Chestnut Run Plaza, P.O. Box 80711, Wilmington, Delaware 19880
92. John J. Cuttica, Vice President of Research and Development, Gas Research Institute, 8600 W. Bryn Mawr Avenue, Chicago, Illinois 60631
93. Dick Denny, Air Conditioning and Refrigeration Institute, 1501 Wilson Boulevard, 6th Floor, Arlington, Virginia 22209
94. John Dieckmann, Arthur D. Little, Acorn Park, Cambridge, Massachusetts 02140-2390
95. Frank Dwyer, Allied-Signal, Inc., Genetron Products, Technical Service, Buffalo Research Laboratory, 20 Peabody Street, Buffalo, New York 14210
96. Tom Edwards, Rovac Corporation, Product Design Office, 1426 Gleneagles Way, Rockledge, Florida 32955
97. Hunter Fanney, National Institute of Standards and Technology, Gaithersburg, Maryland 20899
98. David Fenichel, ICF, Inc., 9300 Lee Highway, Fairfax, Virginia 22031
99. Ron Fiskum, U.S. Department of Energy, CE-132, FORSTL, GF-217, 1000 Independence Ave., SW, Washington, D.C. 20585
100. Ken Fouts, Acustar, Inc., Product Engineering, Dayton Thermal Products Division, CIMS 482-07-00, 1600 Webster Street, Dayton, Ohio 45401-1205
101. Howard Geller, American Council for an Energy Efficient Economy, 1001 Connecticut Avenue, NW, Suite 535, Washington, DC 20036
102. Joseph Glas, E. I. DuPont de Nemours & Company, Chemicals and Pigments Department, Brandywine Building 13237, Wilmington, Delaware 19898
103. Leon Glicksman, Massachusetts Institute of Technology, Room 3-433, Cambridge, Massachusetts 20139
104. David Goldberg, Standard Refrigeration Company, 2050 North Ruby Street, Melrose Park, Illinois 60160
105. Dieter Grether, International Environmental, P.O. Box 25608, 5000 S.W. 7th Street, Oklahoma City, Oklahoma 73125
106. Michael Griffith, Owens-Corning Fiberglass Technical Center, P.O. Box 415, Granville, Ohio 43023
107. Harry Hale, Carrier Corporation, Corporate Engineering Services, P.O. Box 4808, Carrier Parkway, Syracuse, New York 13221
108. Renee Hancher, Air Conditioning and Refrigeration Institute, 1501 Wilson Boulevard, 6th Floor, Arlington, Virginia 22209-2403

109. Floyd Hayes, The Trane Company, Thermal Systems Technology, 3600 Pammel Creek Road, La Crosse, Wisconsin 54601-7599
110. Ken Hickman, York International Corporation, P.O. Box 1592-191A, York, Pennsylvania 17405-1592
111. James Hill, National Institute of Standards and Technology, Room B-306, Building 226, Gaithersburg, Maryland 20899
112. Fred Honnold, Carrier Corporation, P.O. Box 4808, Carrier Parkway, Syracuse, New York 13221
113. Mike Hughes, Allied-Signal, Inc., Buffalo Research Laboratory, 20 Peabody Street, Buffalo, New York 14210
114. Earl L. Ingalls, Honeywell, Director of Engineering, Residential Division, 1985 Douglas Drive North, Golden Valley, Minnesota 55422-3992
115. Bob Johnson, Whirlpool Corporation, Highway 41N, Evansville, Indiana 47727
116. Robert Johnson, Lennox Industries, Inc., 7920 Belt Line Road (75240), P.O. Box 809000, Dallas, Texas 75380-9000
117. Powell Joyner, Electric Power Research Institute, P.O. Box 10412, Palo Alto, California 94040
118. Joseph P. Kalt, Professor of Economics, Kennedy School of Government, Harvard University, 79 John F. Kennedy Street, Cambridge, Massachusetts 02138
119. Ted Kapus, U.S. Department of Energy, CE-132, FORSTL, GF-217, 1000 Independence Ave., SW, Washington, D.C. 20585
120. Richard Kruck, Whirlpool Corporation, Advanced Manufacturing Engineering, Elisha Gray II Research and Engineering Center, Monte Road, Benton Harbor, Michigan 49022
121. Prof Dr-Ing H. Kruse, Universitat Hannover, Institut fur Kaltetechnik und Angewandte Warmetechnik, Kaltetechnik und Warmepumpen, Welfengarten 1A, 3000 Hannover 1, Federal Republic of Germany
122. Dennis Larratt, Manville Sales Corporation, Manville Technical Center R-32, Roofing Systems Division, Post Office Box 5108, Denver, Colorado 80217-5108
123. James Lavelle, Pennwalt Corporation, Fluorochemicals Division, 900 First Avenue, P.O. Box 1536, King of Prussia, Pennsylvania 19406-0018
124. Carl Laverrenz, Tyler Refrigeration Corporation, Research and Development, Niles, Michigan 49120
125. Tom Lloyd, Dow Chemical, Urethane Group, Freeport, Texas 77541
126. Stephen Malaker, Cryodynamics, Inc., 191 Mill Lane, Mountainside, New Jersey 07902
127. Uzi Mann, Texas Tech University, Department of Chemical Engineering, Lubbock, Texas 79409-3121
128. Ed McInerny, General Electric Company, Appliance Park, Louisville, Kentucky 40225
129. Mark McLinden, National Institute of Standards and Technology, Mailstop 584.03, 325 Broadway, Boulder, Colorado 80303-3328
130. John P. Millhone, Director, Office of Building Energy Research and Development, U.S. Department of Energy, 1000 Independence Ave., SW, Washington, D.C. 20585
131. Dan Moore, White Consolidated Industries, Inc., W.C.I. Freezer Division, 701 33rd Avenue North, St. Cloud, Minnesota 56303
132. Denton E. Morrison, Professor of Sociology, Michigan State University, 201 Berkey Hall, East Lansing, Michigan 48824-11111
133. Tom Nelson, Radian Corporation, Process Engineering Department, P.O. Box 201088, 8501 Mo-Pac Boulevard, Austin, Texas 78720-1088
134. Angelo Patti, Chrysler Motors Corporation, CFC Group, CIMS 416-33-06, 12800 Oakland Avenue, Highland Park, Michigan 48203-1118

135. Richard L. Perrine, Engineering and Applied Sciences, Civil Engineering Department, Engineering I, Room 2066, University of California, Los Angeles, California 90024-1593
136. Stephen Petersen, National Institute of Standards and Technology, Applied Economics Group, Mathematical Analysis Division, Center for Applied Mathematics, Building 224, Room B-120, Gaithersburg, Maryland 20899
137. Tom Potter, Solar Energy Research Institute, 1617 Cole Boulevard, Golden, Colorado 80401
138. Jan Pottinger, Admiral Home Appliances, Product Engineering, Monmouth Boulevard, Galesburg, Illinois 61401
139. Hal Rhea, Lennox Industries, Inc., P.O. Box 877, Carrollton, Texas 75011-0877
140. Otto Riegger, Tecumseh Research Center, Tecumseh Research Center, 3869 Research Park Drive, Ann Arbor, Michigan 48108
141. Dean Ruwe, Copeland Corporation, 1675 West Campbell Road, Sidney, Ohio 45365-0699
142. John D. Ryan, U.S. Department of Energy, CE-132, FORSTL, GF-217, 1000 Independence Ave., SW, Washington, D.C. 20585
143. Tom Schregardus, Raytheon Company, New Product Center, 63 Second Avenue, Burlington, Massachusetts 01803
144. James Schultz, The Trane Company, Commercial Systems Group, 3600 Pammel Creek Road, La Crosse, Wisconsin 54601
145. Ian Shankland, Allied-Signal, Inc., 20 Peabody Street, Buffalo, New York 14121
146. Fred Sissine, Library of Congress, 413 Madison Building, Washington, DC 20540
147. Dean Smith, Environmental Protection Agency, Air and Energy Engineering Research Lab., MD-62B, Research Triangle Park, North Carolina 27711
148. Leo Soorus, Whirlpool Corporation, Government Affairs, 2303 Pipestone Road, Benton Harbor, Michigan 49022
149. Hans Spauschus, Spauschus Associates, 761 Woodward Way, Atlanta, Georgia 30327
150. Terry Statt, U.S. Department of Energy, CE-132 FORSTL GF-217, 1000 Independence Ave., SW, Washington, D.C. 20585
151. Gerald Stofflet, General Motors Corporation, General Motors Technical Center, 30400 Mound Road, Warren, Michigan 48090-9015
152. Sonny Sundaresan, Copeland Corporation, Materials Engineering and Systems Chemistry, 1675 West Campbell Road, Sidney, Ohio 45365
153. Sherwood Talbert, Battelle Columbus, 505 King Avenue, Columbus, Ohio 43201
154. Charles Tambornino, SnyderGeneral Corporation, P.O. Box 1551, Minneapolis, Minnesota 55440
155. J. Kenneth Taulbee, White Consolidated Industries, Inc., 2340 Second Avenue NW, Cullman, Alabama 35055
156. Rick Tempchin, Edison Electric Institute, 1111 19th Street, NW, Washington, DC 20036
157. Lois Thompson, U.S. Department of Energy, EH-231, 1000 Independence Ave., SW, Washington, D.C. 20585
158. T. E. Watson, McQuay, Snyder General Corporation, P.O. Box 2510, Staunton, Virginia 24401-1420
159. Jack Weizeorick, Association of Home Appliance Manufacturers, 20 North Wacker Drive, Chicago, Illinois 60606
160. Gary Wilson, Whirlpool Corporation, Elisha Gray II Research Engineering Center, Monte Road, Benton Harbor, Michigan 49022
161. Pete Wilson, Copeland Corporation, 1675 West Campbell Road, Sidney, Ohio 45365-0699

162. Joe Ziegler, General Electric Company, Appliance Park, Louisville, Kentucky 40225
163. Office of the Assistant Manager for Energy R&D, DOE-ORO, P.O. Box 2001, Oak Ridge, Tennessee 37831-8600
164. U.S. Department of Energy, Technical Information Center, P. O. Box 62, Oak Ridge, Tennessee 37831
165-174. OSTI, U.S. Department of Energy, P.O. Box 62, Oak Ridge, Tennessee 37831
175-200. External Energy Conservation Distribution, Oak Ridge National Laboratory, Building 3147, Mail Stop 6070, Oak Ridge, Tennessee 37831-6070

☆U.S. GOVERNMENT PRINTING OFFICE:1989 -648-119/60188