ornl

OAK RIDGE NATIONAL LABORATORY

MARTIN MARIETTA

ORNL-6797

REFRIGERATION AND AIR-CONDITIONING TECHNOLOGY WORKSHOP

Proceedings of the 1993
Non-Fluorocarbon Refrigeration
and Air-Conditioning
Technology Workshop

Breckenridge, Colorado
June 23–25, 1993

Editor
P. J. Lewis

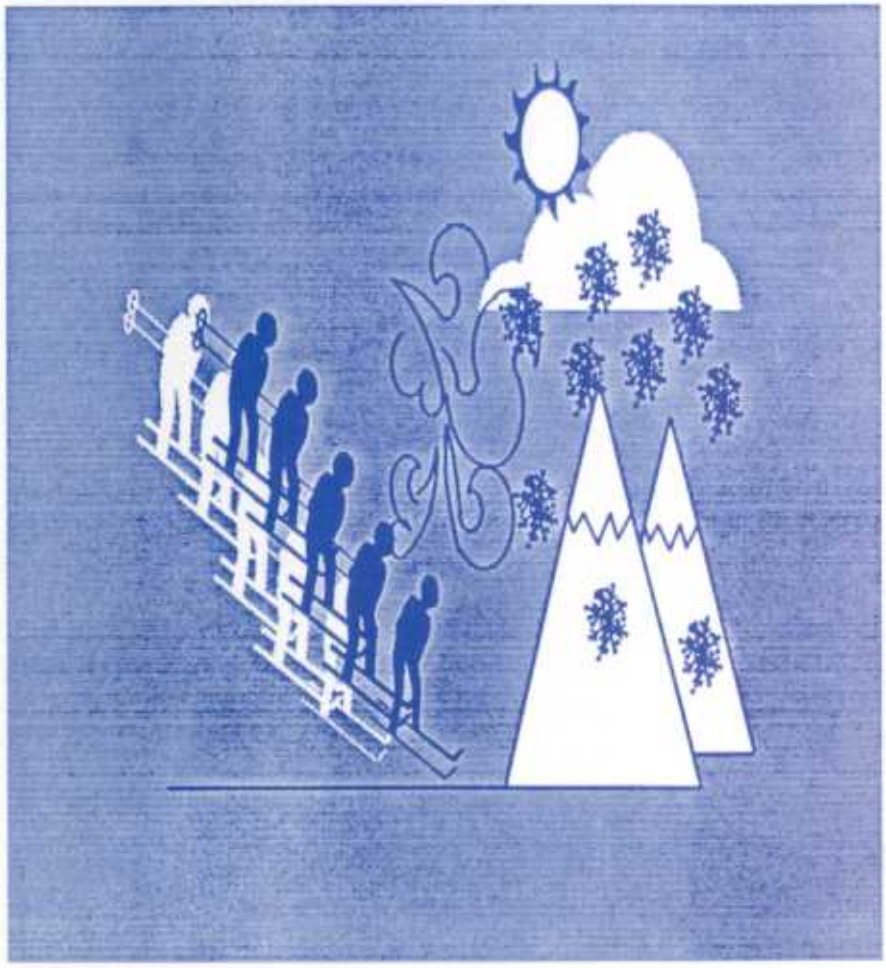

MANAGED BY
MARTIN MARIETTA ENERGY SYSTEMS, INC.
FOR THE UNITED STATES
DEPARTMENT OF ENERGY

ORNL-6797

REFRIGERATION AND AIR-CONDITIONING TECHNOLOGY WORKSHOP

Proceedings of the 1993 Non-Fluorocarbon
Refrigeration and Air-Conditioning
Technology Workshop

Breckenridge, Colorado
June 23–25, 1993

Editor
Pamela J. Lewis

Technical Editor
D. M. Counce

Prepared by the
OAK RIDGE NATIONAL LABORATORY
Oak Ridge, Tennessee 37831-2008
managed by
MARTIN MARIETTA ENERGY SYSTEMS, INC.
for the
U.S. DEPARTMENT OF ENERGY
under Contract DE-AC05-84OR21400

TABLE OF CONTENTS

Page

1. INTRODUCTION 1

Written Submission 2
Oral Presentation 2

2. SUMMARY 3

Hydrocarbon Refrigeration 3
Free-Piston Oil-Free Compressor Developments 4
Stirling Cycle Refrigeration 4
Compression/Absorption Hybrid Heat Pump Cycles 5
Ammonia Compression 5
Absorption 5
Evaporative Cooling 6
Desiccant Cooling 6
Adsorption Cooling 7
Sonic Compression 7
Thermoacoustic Cooling 7
Magnetic Refrigeration 8
Hydraulic Refrigeration 8
Thermoelectric Cooling 9
Metal Hydride Cooling 9
Sorption 9
Advanced Fluorocarbon Compression Systems 9

APPENDIX A. AGENDA A-1

APPENDIX B. LIST OF PARTICIPANTS B-1

APPENDIX C. PAPERS PRESENTED BY SPEAKERS C-1

APPENDIX D. QUESTIONS AND ANSWERS D-1

APPENDIX E. DISTRIBUTION E-1

INTRODUCTION

Production of chlorofluorocarbons (CFCs) for virtually all applications in refrigeration and air conditioning will be phased out by 1996 in developed countries. This production ban is required under the Montreal Protocol and its subsequent revisions. Some individual countries have agreed to an even more rapid phaseout of CFCs and are also undertaking to regulate or prohibit the use of hydrochlorofluorocarbons (HCFCs) and hydrofluorocarbons (HFCs). Many fundamentally different technologies could serve as alternatives to vapor compression systems using HCFCs or HFCs. These include Stirling cycle refrigeration, gas-fired absorption chillers, thermoelectric cooling, magnetic refrigeration, and acoustic compression, among others. Conventional compression equipment using "natural" refrigerants such as ammonia or hydrocarbons is another viable alternative. It is extremely important that policies regulating the uses of refrigerants be developed with an accurate understanding of what technologies could be developed to replace conventional compression systems. Questions need to be answered concerning when end-use equipment based on these technologies could be available; what segments and fractions of the market would be affected; and perhaps most important, how the equipment effiencies, energy use, and ultimately indirect CO_2 emissions compare with equipment designed to use HCFCs or HFCs. Without knowledge of these issues, there may be prolonged periods when essential products are not available because fluorocarbons were forced out of use before viable alternative technologies could be developed. There could also be substantial increases in worldwide energy use and CO_2 emissions because decisions were made on incomplete or theoretical predictions of system energy efficiencies.

The Alternative Fluorocarbon Environmental Acceptability Study (AFEAS), a consortium of fluorocarbon manufacturers, and the U.S. Department of Energy (DOE) are collaborating on a project to evaluate the energy use and global warming impacts of CFC alternatives. The goal of this project is to identify technologies that could replace the use of CFCs in refrigeration, heating, and air-conditioning equipment; to evaluate the direct impacts of chemical emissions on global warming; and to compile accurate estimates of energy use and indirect CO_2 emissions of substitute technologies. The first phase of this work focused on alternatives that could be commercialized before the year 2000; the results and conclusions are presented in the 1991 report, *Energy and Global Warming Impacts of CFC Alternative Technologies*. The time frame under consideration limited this phase of the study primarily to HCFC and HFC replacements for CFCs.

The second phase of the project is examining not-in-kind and next-generation technologies that could be developed to replace CFCs, HCFCs, and HFCs over a longer period. As part of this effort, Oak Ridge National Laboratory held a workshop in Breckenridge, Colorado, on June 23–25, 1993. The preliminary agenda covered a broad range of alternative technologies and at least one speaker was invited to make a brief presentation at the workshop on each technology. Some of the invited speakers were unable to participate, and in a few cases other experts could not be identified. As a result, those technologies were not represented at the workshop.

Each speaker was asked to prepare a five to seven page paper addressing six key issues concerning the technology he/she is developing. These points are listed in the sidebar. Each expert also spoke for 20 to 25 minutes at the workshop and answered questions from the other participants concerning the presentation and area of expertise. The primary goal of the presentations and discussions was to identify the developmental state of the technology and to obtain comparable data on system efficiencies. The papers submitted by each speaker are reproduced in Appendix C, along

Written Submission (5-7 pages)

1. Technology Description:
   Briefly describe the technology. (2 pages)

2. Application:
   What is the intended application? (1/4 page)

3. Benefits:
   What are the benefits of the technology and what is the energy efficiency? (1/4 page)

4. Technical Issues:
   What are the technical issues and problems that need to be solved? (2 pages)

5. Economics:
   What are the anticipated first costs of the system, how were these calculated, and how do they compare with existing systems that perform the same function? (1 page)

6. Technology Outlook:
   What is the development status of the technology, and what is the timetable for commercialization? Provide a qualitative assessment of market penetration. (1 page)

Oral Presentation (20-25 minutes)

1. Current state of development
2. Realistic efficiency goals.
3. Appropriate equipment applications.
4. Market and technical obstacles to further development.
5. Realistic time frame to get product on the market.
6. Qualitative assessment of market penetration.

with the questions raised after each presentations and answers prepared by each speaker. Note that the material in Appendix C has not been edited or reviewed, and its technical accuracy is not endorsed by AFEAS, Oak Ridge National Laboratory, or DOE.

There is an inherent conflict of interest between AFEAS as sponsors of the workshop and the proponents of technologies that could compete with products of the AFEAS companies. There is also a possible bias within Oak Ridge National Laboratory because of its involvement in existing or prior contracts between DOE and some but not all of the companies represented by the invited speakers. To maintain objectivity throughout the meeting, a panel of independent experts from academia, industry, government, and environmental interest groups was assembled to conduct the technical sessions of the workshop. Members of this panel were as follows:

- Dr. Horst Kruse of the University of Hannover in Germany,
- Mr. William Kopko of the U.S. Environmental Protection Agency,
- Dr. Shigehiro Uemura of Daikin Industries, and
- Mr. Damian Durrant of Greenpeace.

Dr. Kruse served as chairman of this panel. He questioned the speakers at the end of their presentations to ensure that they addressed the six key issues, permitted the other panel members to comment on the presentations and ask questions, and opened the discussion to the other workshop participants.

Copies of the papers submitted by the speakers, some of their visual aids, and questions and answers for each technology are included in these proceedings.

SUMMARY

At the conclusion of the workshop, Dr. Kruse also led the panel members in compiling a summary of each technology and its stage of development, potential for commercialization, and relative effect on system energy use compared to HCFC and HFC systems. The panel was not asked to reach a consensus or conclusions about the future viability of any technology. The panel's observations on the technologies are summarized in the following sections.

Hydrocarbon Refrigeration

Domestic refrigerators using hydrocarbon refrigerants have already been commercialized in Europe, although they have not been introduced into the markets in Japan or the United States because of product liability concerns. In fact, it is questionable whether a significant market potential will develop in either of those countries because of the concerns raised about using a flammable refrigerant. The market potential throughout Europe and in the developing countries is considered to be high. The energy efficiency of refrigerators using hydrocarbons is more or less the same as that of a refrigerator using HFC-134a; conflicting claims are made by the advocates and the opponents of using hydrocarbons in a refrigerator, and no conclusive data from directly comparable tests appear to be available.

Free-Piston Oil-Free Compressor Developments

An American manufacturer has produced a very well designed prototype for a free-piston oil-free compressor and could bring the product to the market in 2 to 3 years. There is a high market potential for this compressor because it has superior efficiency resulting from the absence of a crank assembly and the associated friction losses. This product has an especially good chance for future application in small capacity systems such as household refrigerators.

Stirling Cycle Refrigeration

Several research and development companies and appliance manufacturers are actively pursuing application of the Stirling refrigeration cycle to refrigerator/freezers and supermarket display cases. Different approaches are used both in the drive mechanism (free-piston and kinematic drives) and in ways to achieve low friction losses within the systems (e.g. gas bearings and flexible bearings). Two free-piston systems have demonstrated energy efficiencies that are comparable with conventional refrigerators. One project, a collaboration between two companies, resulted in a free-piston prototype with gas bearings. This system demonstrated an efficiency that is comparable with conventional vapor compression refrigerators in the 200-W range and would have superior efficiency in the 50-W range. In this case, it will take about 7 years to bring a product to the market because of the need to develop external funding to cover the initial investment costs for a production line. Presently, the private research and development funds of appliance manufacturers are being absorbed by the near-term task of converting from CFCs to HFCs.

A separate project at a different company has resulted in a demonstration prototype using flexible bearings instead of gas bearings. Flexible bearings limit the compressor stroke to a certain extent and are also advantageous from the point of view of oil-free compression and expansion with low friction. This design may be competitive with conventional refrigerators. The company has also found that the investment costs for a potential manufacturing partner are an obstacle for introduction into the market within the next 7 years.

Unfortunately, the market potential of Stirling refrigerators appears to be severely limited because they have not demonstrated an efficiency advantage over conventional refrigerators using HFCs. There may be potential in the United States and Japan if international agreements force the use of nonfluorocarbon refrigerants with essentially zero global warming potential (GWP) and manufacturers in those countries insist on nonflammable working fluids (that is not the case in Europe and most developing countries). In that case, the Stirling refrigeration cycle might have market potential because it uses helium as the working fluid, combined with heat pipes that could use nonflammable heat transfer fluids, such as CO_2.

A kinematic Stirling cycle refrigeration system (rhomboidal crank drive mechanism) has been developed for supermarket display cases. Because of the additional friction and adiabatic losses with the kinematic drive and high speeds, it is important that the temperatures of the application be sufficiently low to take advantage of the inherently higher efficiency of the Stirling cycle in this temperature range. This product exists only at the design stage, and the efficiency has not been demonstrated with a prototype system. The Stirling cycle requires a secondary heat transfer loop because of the local heat transfer area at the head of the Stirling machine—in which case there may be no efficiency advantage over conventional compression equipment using ammonia or hydrocarbons—and a secondary heat transfer loop to keep the hazardous refrigerants out of the retail

area of the store. No high market potential is foreseen for Stirling cycle refrigeration in commercial applications. The technology could compete successfully in even lower temperature applications where vapor compression cascade systems currently dominate and where there are essentially no available nonflammable refrigerants to replace the CFCs and HCFCs used today.

Compression/Absorption Hybrid Heat Pump Cycles

A laboratory demonstration unit of a hybrid compression/absorption heat pump has been developed in the United States which could be brought to market in about 3 years; similar systems using ammonia/water have already been built commercially in Europe for heat pump applications. These systems need an oil-free compressor to avoid contaminating the heat and mass transfer surfaces in the heat exchangers with oil. Presently only niche applications appear possible in the market for substitution of HFCs. The efficiency of compression/absorption hybrid cycles may be superior to conventional compression systems because of the gliding temperatures in the heat exchangers. Ammonia systems with a water solution in the heat exchanger seem to present a drastically lower danger of releasing ammonia to the ambient air than do compression systems using ammonia. This system can also use fluids in their supercritical state by dissolving them into the solution. It seems to have long-term potential as an energy efficient substitute for larger sized vapor compression systems using an HFC.

Ammonia Compression

Past technologies using ammonia as a refrigerant in chillers are being reviewed and developments are being pushed with the aim to establish highly reliable ammonia compression systems. Ammonia is both toxic and flammable at low concentrations, so restrictions on installation methods pose obstacles to promoting ammonia equipment, especially in the United States and Japan. Research is being carried out on improving heat exchangers to reduce the volume of ammonia used and to make the systems more compact. The efficiency is considered to be the same as for fluorocarbon compression systems, but improvements in heat exchangers may make ammonia compression efficiences superior to that of fluorocarbon compression.

Commercial refrigeration systems using ammonia are already commercialized in Europe, but they are still in the evaluation stage in the United States and other countries. It will be necessary to set up safety measures to protect against both the toxicity and flammability of ammonia. Secondary brine loops may be required to isolate the ammonia from the customer areas of stores, in which case the energy efficiency will be slightly reduced.

Absorption

A small number of ammonia/water unitary air conditioners and heat pumps are being manufactured worldwide. Technical issues include improvement of operating efficiency, reliability of solution pumps, identification of corrosion-free materials, and development of system control technology. Reduction of the sizes of the absorber and generator would also be desirable. The generator absorber exchanger (GAX) cycle has been recommended for future applications, and demonstrations of the operation of this system are being conducted. Absorption efficiencies have not been high in the past, but it is highly possible that efficiency may be improved with adoption of the GAX cycle. The market potential for this equipment will be affected by the relative costs of natural gas and electricity and by the availability of natural gas. The company developing absorption air

conditioners and heat pumps wants to take about 10% of the present market for vapor compression equipment.

Absorption cycle chillers have a long history of being manufactured worldwide. One of the key benefits of absorption chillers is that they suppress peak electricity consumption during the summer months, reducing utility demand charges. In the past, the double-effect chiller was developed to improve upon the energy efficiency of the single effect system, and now there is an effort to develop the triple-effect system for further efficiency gains. The high initial costs of absorption chillers and the availability of natural gas limit the market potential of these systems; favorable comparisons with the life cycle costs of vapor compression systems are important.

Evaporative Cooling

Direct evaporative cooling has been widely used in desert climates for many years. Indirect evaporative cooling can be used in more humid areas. Efficiency is superior; energy use is typically less than half of that of conventional air-conditioning systems. Market potential is large in dry climates where evaporative cooling can match the comfort levels provided by mechanical cooling. Limited markets are possible even in humid areas in locations such as factories and farms with looser cooling requirements. Besides climate limitations, barriers to greater use of evaporative cooling include reluctance of designers to specify an unfamiliar technology. Water availability is rarely a problem in the United States, but it could be a barrier in areas such as the Middle East that have severely limited water supplies.

Evaporative cooling has also been applied successfully for air conditioning of transit buses in many areas of the United States, and these systems for vehicles are already in commercial production. They should save a significant amount of energy compared with conventional air conditioning and eliminate the need for a refrigerant. Bureaucratic concerns about changing air conditioning specifications appear to be a major barrier to increased use of evaporative cooling for public transportation. Although evaporative cooling works best in dry climates, indirect cooling systems should be able to provide acceptable comfort in the United States, except in the humid southeastern region.

Desiccant Cooling

Liquid desiccant systems use a salt spray to dehumidify air and can be combined with evaporative cooling for air-conditioning purposes. A boiler drives the excess water out of the salt solution. With a single-effect boiler, the efficiency of the system is relatively low. Multiple-effect boilers can improve efficiency but increase both the cost and complexity of the system. Solar-driven systems are also possible. This technology is currently in limited commercial production.

Another variation of desiccant cooling combines evaporative cooling with heat wheels and solid-desiccant wheels to create a heat-driven (i.e., natural gas or waste heat as opposed to electricity-driven) cooling system. Manufacturers are working to develop proprietary desiccant materials that should substantially reduce the source temperatures needed to run the systems. The typical application uses natural gas as the energy source to drive the system, although electric heat-pump systems are also possible. The energy efficiency of gas-powered systems is comparable with that of conventional electric cooling when power plant and transmission losses are included. Desiccant systems can provide superior efficiency in areas where evaporative cooling can be used for much of

the year. Solar-driven systems are also a possibility for improving efficiency. Some companies are planning field tests as early as 1994. This technology is in small-scale commercial production. Full-scale production requires participation of a larger manufacturer; the absence of a major manufacturer to produce and distribute the product is a significant barrier facing desiccant cooling systems.

Adsorption Cooling

Several companies are pursuing the development of adsorption cooling systems. One organization has designed a system using multiple canisters of activated carbon that use heat to pump refrigerant to a higher pressure. This technology is in the laboratory demonstration phase with field tests scheduled for 1995. Another developer is in the early stages of developing a prototype and has a field test planned for 1996. The cooling efficiency of both these systems is lower than that of conventional electric cooling systems based on source fuel use, although one laboratory working on the concept has proprietary modifications that could make its system more efficient than conventional air conditioning. The heating efficiency should be superior to conventional electric systems. The relative prices of electricity and natural gas will be an important factor in determining the market for adsorption cooling systems.

Sonic Compression

Sonic and thermoacoustic cooling devices present an appealing elegance and simplicity, and unlike some technologies presented at the workshop, they do not require development of advanced materials. The compressor could use fluorocarbons, ammonia, or hydrocarbons (inert gases require high-frequency valve oscillation), depending on choices by industry.

A laboratory proof-of-concept device exists, and initial obstacles of noise and oil free valve operation are solved. There is manufacturer involvement in development, and the efficiency is more than theoretically comparable with vapor compression with an EER of 7 to 8 (confirmed in July). The first prototype in May 1993 delivered 372 to 852 Btu/h, similar to domestic U.S. refrigerator values; but as of June, the prototype was not yet instrumented and energy efficiency therefore was not measured (as of August 1993, efficiencies are measured but confidential).

With manufacturer support continuing through realizing predicted efficiency improvements, there is a 3- to 5-year plan from research and development to life testing to first run for small applications. The technology represents a potential low-investment, low-cost, oil-free, in-kind compressor alternative, scaleable to larger applications for air conditioning. The market potential was estimated as medium to high for initial applications, which will use HFCs as the working gas.

Thermoacoustic Cooling

A small cooling capacity (4 W at $T_{hot} - T_{cold} = 37°C$) thermoacoustic cooling device, STAR, was demonstrated on the space shuttle Discovery in January 1992. A higher powered unit (700 Btu/h refrigerator, 400 Btu/h freezer) originally designed for the Shuttle is currently undergoing testing. Both refrigerators utilize inert helium/argon gas with none of the direct GWP of fluorocarbons. Thermodynamic energy efficiency as high as 20% of Carnot was measured for STAR, and a predicted 42% of Carnot is expected for the upcoming variant, including heat exchanger losses but excluding electrical losses. Manufacturer collaboration includes evaluation by the auto industry for a variety of

applications, including mobile air conditioning (the initial report is due in fall 1993) and initial commercialization for refrigerator/freezers for marine craft.

The thermodynamics of the technology have been demonstrated, as well as primary heat exchange within the engine at the 100-W level. Efficient, low-cost generation of acoustic power, as well as efficient coupling of the cooling engine to the intended load, will be the key to realizing energy efficiency for refrigerator size uses. Future applications could include the kilowatt to several tons of cooling range for domestic air conditioning, perhaps 2 years into the future.

The key external variable remains sustained funding, both federal and private, to demonstrate the modeled competitive energy efficiency of the overall system, including secondary heat exchange and electroacoustic energy conversion, which includes driver and power source. Given funding, there could be as little as 3 years to first market because of the potential for an energy-efficient, low-investment, low-production-cost device with broad application. The use of nonfluorocarbon inert gases could be increasingly attractive to industry and consumers alike, given global warming concerns. The market potential of thermoacoustic cooling is broadly estimated as medium to good.

Magnetic Refrigeration

Magnetic refrigeration technology remains in the proof-of-concept or demonstration phase, and the planned retail-size refrigeration system remains in the concept/design phase. Obstacles to the technology are the need for cryogenic cooling of the superconducting system, development of low-cost superconducting magnets, and low-cost materials. The projected life-time return on investment may not counteract the high projected initial investment cost of a retail-size system.

The energy efficiency is not demonstrated, but a modeled COP of 5 is reported for the retail-size system. A demonstration prototype of a refrigerator-scale magnetic cooling device is being built with U.S. DOE support to validate the model. It was felt the time to enter the market could be in the order of up to 5 to 10 years, with sustained funding, and assuming the HFC regulatory environment is unchanged.

Nevertheless, magnetic cooling might find support from the electric power industry as an alternative to emerging competitive gas-fired systems for retail/supermarket cooling and dehumidification applications, particularly if HFC refrigerants are limited or regulated.

Hydraulic Refrigeration

Presentations were made on gravity-driven hydraulic refrigeration and Malone cycle hydraulic refrigeration. A laboratory prototype gravity-driven cooling system is in operation, and a commercial product could be on the market in as little as 3 years. The major drawbacks are the overall size of the system and, in the United States and Japan, flammability. The greatest market potential would appear to be in the developing countries, and the efficiency is predicted to be comparable to that of compression systems using fluorocarbons. The Malone cycle hydraulic system is at the laboratory concept demonstration stage and could not be commercialized for 7 to 10 years. The major obstacles to further development are the limited funding available for development and the high operating pressures. The market potential is probably low. In the near term, the predicted efficiency is relatively low, but the potential exists for it to be comparable to compression systems.

Thermoelectric Cooling

Thermoelectric cooling based on the Peltier Effect is in one sense a mature technology; it is already available in some consumer and specialty products and could be used in additional applications in a year or less. A major breakthrough in thermoelectric materials is needed, however, to achieve an energy efficiency 90% that of compression cooling systems at low ΔT's; energy efficiency at high ΔT's is a major obstacle to developing this technology. Market potential is believed to be limited to specialty niche applications in cooling elements on electronic circuit boards, military applications, and convenience consumer products.

Metal Hydride Cooling

Metal hydrides could potentially be incorporated into cooling systems for vehicular air conditioning. Right now this technology is at the laboratory demonstration stage in the United States, and a commercial product could not be available for another 3 to 5 years. The major obstacles to employing this technology are the cost and flammability of the materials. No conclusions were drawn concerning the market potential for this technology. The system efficiency is low, although it can operate on waste heat (alternatively, an additional burner would be required).

Sorption

A prototype sorption system is operating and a commercial unit could be available in 1 to 4 years. The market potential for this technology is good in some geographic regions, depending on the regional gas and electricity prices and on the gas supply. System heating and cooling efficiencies are not presented in the paper.

Advanced Fluorocarbon Compression Systems

Vapor compression systems using fluorocarbon refrigerants have not reached their thermodynamic limits in performance, and industry is actively looking at feasible concepts for improving their efficiencies. Those concepts include the following:

- Vane axial and air foil fans could be used in residential air conditioners in place of the prop fans currently used in condensing units and the forward curved blade fans in indoor air handlers.

- Zeotropic blends of refrigerants may be required for long-term efficiency gains for water-cooled chillers that are already pushing the practical efficiency limits with current refrigerants.

- Variable-speed motors and drives may be more widely applied to push efficiency higher than is cost effective using single-speed components.

- Scroll and screw compressors may be adopted to improve both reliability and efficiency.

- Heat exchangers with smaller internal volumes are being developed to reduce refrigerant charge levels.

- Devices are being developed to recover some of the lost work in the expansion process.

It is not possible to project over the long term which of these developments—or what other developments—will be incorporated into future products, or what will be the impacts on cost and, to a lesser extent, efficiency.

APPENDIX A

AGENDA

Refrigeration & Air Conditioning Technology Workshop
Breckenridge Hilton, Breckenridge, CO
June 23-25, 1993

Wednesday - June 23

8:00-8:45 Continental Breakfast

8:45-9:00 Introduction and Welcoming Remarks

9:00-10:00 Alternative Compression Systems
- Hydrocarbon Compression (Manfred Doehlinger)
- Free-Piston Oil-Free Compressor (David Berchowitz, Sunpower)

10:00-10:30 Coffee Break

10:30-12:00 Stirling Cycle Refrigeration
- Stirling Cycle Refrigeration (David Berchowitz, Sunpower)
- Stirling Cycle Refrigeration (Pete Riggle, STC)
- Stirling Cycle Refrigeration (Ed Miniatt, STM)

12:00-1:30 Luncheon

1:30-3:00 Acoustic, Thermo-Acoustic, & Magnetic Cooling
- Acoustic Compressors (Tim Lucas, Sonic Compressors)
- Thermoacoustic Cooling (Steven Garrett, Naval Postgrad School)
- Magnetic Refrigeration (Anthony DeGregoria, Astronautics)

3:00-3:30 Break

3:30-4:30 Evaporative Cooling
- Evaporative Cooling (Robert Foster, NMSU)
- Evaporative Cooling (James Mattil, Climatron)

Thursday - June 24

8:00-8:45 Continental Breakfast

8:45-9:00 Introductions & Welcoming Remarks

9:00-10:30 Advanced Compression Systems
- Fluorocarbon Compression (Paul Glamm, Trane)
- Fluorocarbon Compression (Sonny Sundaresan, Copeland)
- Ammonia Compression (Kent Anderson, IIAR)

10:30-11:00 Coffee Break

11:00-12:30 Absorption Cooling
- NH_3 / H_2O Absorption Cooling (Joe Marsalla, GRI)
- LiBr / H_2O Absorption Cooling (Jay Kohler, York International)
- Compression / Absorption Hybrid (Reinhard Radermacher, UM)

12:30-2:00 Luncheon

2:00-3:30 Desiccant Cooling
- Liquid Desiccants (Andy Lowenstein, AIL Research)
- Desiccants (James Coellner, ICC Technologies)
- Desiccants (W. Belding, Innovative Research Enterprises)

3:00-3:30 Break

3:30-4:30 Adsorption Technologies
- Adsorption (Jack Jones, JPL)
- Adsorption (Bill Ryan, GRI)

6:00-7:00 Reception - Cash Bar

7:00 Dinner

Friday - June 25

8:00-8:30 Continental Breakfast

8:30-9:30 Hydraulic Refrigeration
- Gravity Driven Hydraulic Refrigeration (Warren Rice, Arizona State Univ.)
- Malone Cycle Hydraulic Refrigeration (Gregory Swift, Los Alamos)

9:30-10:30 Thermoelectric & Metal Hydride Technologies
- Thermoelectric Cooling (B. Mathiprakasam, MRI)
- Metal Hydride Cooling (Dave DaCosta, Ergenics)
- Sorption (Sam Shelton, Wave Air)

10:30-11:30 Wrap-Up and Summary

APPENDIX B

LIST OF PARTICIPANTS

1993 Non-Fluorocarbon Refrigeration & Air Conditioning Technology Workshop
Pre-Registered Attendees
June 23-25, 1993

1. Kent Anderson
International Institute of Ammonia Refrigeration
1101 Connecticut Avenue, NW, Ste. 700
Washington, DC 20036-4303
Phone: (202) 857-1110
Fax: (202) 223-4579

2. W. A. Belding
President
Innovative Research Enterprises
84 La Pera Court
Danville, CA 94526
Phone: (510) 743-1775

3. David Berchowitz
Sunpower
6 Byard Street
Athens, OH 45701
Phone: (614) 594-2221
Fax: (614) 593-7531

4. Don Bivens
DuPont
P.O. Box 80711
Wilmington, DE 19880-0711
Phone: (302) 990-3413

5. Charles Bullock
Carrier Corporation
P.O. Box 4808
Carrier Parkway
Syracuse, NY 13221
Phone: (315) 432-6204
Fax: (315) 432-6311

6. Nick Campbell
ICI Chemicals & Polymers Ltd.
Chemical Products
P.O. Box 13, The Heath
Runcorn, Cheshire WA7 4QF
United Kingdom
Phone: 44-928-513145
Fax: 44-928-511418

7. Nigel Carpenter
ICI Chemicals & Polymers, Ltd.
Technical Service Manager Refrigeration
P.O. Box 13
Heath Runcorn
Cheshire WA7 4QF
England
Phone: 0928 513099
Fax: 0928 511418

8. Whitney Carroll
AFEAS Administrative Assistant
SPA-AFEAS
The West Tower, Suite 400
1333 H Street, NW
Washington, DC 20005
Phone: (202) 898-0906
Fax: (202) 789-1206

9. James Coellner
Vice President, Engineering
ICC Technologies
441 North Fifth Street
Philadelphia, PA 19123
Phone: (215) 625-0700
Fax: (215) 592-8299

10. Dave DaCosta
Ergenics, Inc.
247 Margaret King Avenue
Ringwood, NJ 07456
Phone: (201) 962-4480
Fax: (201) 962-4325

11. Anthony J. DeGregoria
Astronautics Corporation of America
Astronautics Technology Center
5800 Cottage Grove Road
Madison, WI 53716
Phone: (608) 221-9001
Fax: (608) 221-9104

12. Tom Dekleva
ICI Klea
CEL Site, Bldg. L-21
Cherry Lane
New Castle, DE 19720
Phone: (302) 427-1008
Fax: (302) 427-1076

13. Manfred Doehlinger
Energietechnik, Inc.
Mauerstrasse 15
3140 Northeim
Germany
Phone: 49 55 51 64 364
Fax: 49 55 51 66 922

14. Damian Durrant
Greenpeace
1436 U Street, NW
Washington, DC 20009
Phone: (202) 319-2518
Fax: (202) 462-4507

15. Phil Fairchild
Oak Ridge National Laboratory
P.O. Box 2008, MS-6070
Oak Ridge, TN 37831
Phone: (615) 574-2020
Fax: (615) 574-9338

16. Steve Fischer
Oak Ridge National Laboratory
P.O. Box 2008, MS-6070
Oak Ridge, TN 37831
Phone: (615) 574-2017
Fax: (615) 574-9338

17. Robert Foster
The Evaporative Cooling Institute
Southwest Technology Development Institute
New Mexico State University
Box 30001
Las Cruces, NM 88003-0001
Phone: (505) 646-3948
Fax: (505) 646-2960

18. Steve Garrett
Department of Physics
PH/GX
Naval Postgraduate School
Monterey, CA 93943
Phone: (408) 656-2540
Fax: (408) 656-2834

19. Paul Glamm
Engineering Manager
The Trane Company
3600 Pammel Creek Road
Lacrosse, Wisconsin 54601-7599
Phone: (608) 787-3706
Fax: (608) 787-2669

20. Andrew Harvey
Foster-Miller, Inc.
350 Second Avenue
Waltham, MA 02154-1196
Phone: (617) 890-3200
Fax: (617) 890-3489

21. Tom Hofler
Department of Physics
PH/HF
Naval Postgraduate School
Monterey, CA 93943
Fax: (408) 656-2834

22. Michael Hughes
Allied-Signal
Technical Supervisor
Buffalo Research Laboratory
20 Peabody Street
Buffalo, NY 14210
Phone: (716) 827-6815

23. Jack Jones
Jet Propulsion Laboratory
Cal Tech
Mail Station 157-102
Pasadena, CA 91109
Phone: (818) 354-4717
Fax: (818) 393-4206

24. Jay Kohler
York International Corp.
P.O. Box 1592-191A
York, PA 17405-1592
Phone: (717) 771-7127
Fax: (717) 771-7297

25. Bill Kopko
Program Manager for Refrigeration
Global Change Division
U.S. Environmental Protection Agency
401 M Street SW, 6202J
Washington, DC 20460
Phone: (202) 233-9124
Fax: (202) 233-9579

26. Dr.-Ing. Horst Kruse
Universitat Hannover
Institut fur Kaltetechnik
und Angewandte Warmetechnik
300 Hannover 1
Welfengarten 1A
Germany

27. Esher Kweller
CE-422, 5H048/FORS
U.S. Department of Energy
1000 Independence Avenue, SW
Washington, DC 20585

28. Pam Lewis
Oak Ridge National Laboratory
P.O. Box 2008, MS-6070
Oak Ridge, TN 37831
Phone: (615) 574-2012
Fax: (615) 574-9338

29. Andy Lowenstein
President
AIL Research, Inc.
18 Cameron Court
Princeton, NJ 08540
Phone: (609) 924-5681
Fax: (609) 452-2856

30. Tim Lucas
Sonic Compressors, Inc.
1054 Technology Park Drive
Glen Allen, VA 23060
Phone: (804) 262-3700
Fax: (804) 266-4627

31. Joe Marsala
Senior Project Manager
Desiccant & Absorption Technologies
Gas Research Institute
8600 West Bryn Mawr Ave.
Chicago, IL 60631
Phone: (312) 399-5419
Fax: (312) 399-8170

32. B. Mathiprakasam
Midwest Research Institute
425 Volker Boulevard
Kansas City, MO 64110
Phone: (816) 753-7600 ext. 528
Fax: (816) 753-8420

33. James F. Mattil
Climatron Corporation
P.O. Box 3627
Englewood, CO 80155-3267

34. Mark Menzer
Air Conditioning and Refrigeration Institute
4301 North Fairfax
Suite 425
Arlington, VA 22203
Phone: (703) 524-8836
Fax: (703) 528-3816

35. Yoshi Mineno
Daikin U.S. Corporation
Manager Corporate Planning
375 Park Avenue, Suite 3308
New York, NY 10152
Phone: (212) 935-4890
Fax: (212) 935-4895

36. Ed Miniatt
Stirling Thermal Motors
275 Metty Drive
Ann Arbor, MI 48103
Phone: (313) 995-1755
Fax: (313) 995-0610

37. Michael Nilles
Babcock & Wilcox
P.O. Box 785, MC-80A
Lynchburg, VA 24505-0785
Phone: (804) 522-6993
Fax: (804) 522-6905

38. Bob Orfeo
Allied-Signal, Inc.
Fluorine Products Division
Buffalo Research Laboratory
20 Peabody Street
Buffalo, NY 14210
Phone: (716) 827-6243
Fax: (716) 827-6207

39. David Perkins
Naval Postgraduate School
Space Systems Academic Group
Bldg. 233, Room 102
Monterey, CA 93943
Phone: (408) 656-2958
Fax: (408) 656-2816

40. Ahmad Pesaran
Senior Engineer
National Renewable Energy Laboratory
1617 Cole Boulevard
Golden, CO 80401
Phone: (303) 275-6025
Fax: (303) 275-6055

41. Reinhard Radermacher
University of Maryland
Dept. of Mechanical Engineering
2177D Engineering Classroom Bldg
College Park, MD 20742-3035
Phone: (301) 405-5286
Fax: (301) 314-9477

42. Warren Rice
Arizona State University
Department of Mechanical
and Aerospace Engineering
Box 875806
Tempe, AZ 85287-6106
Phone: (602) 965-2888

43. Pete Riggle
Stirling Technology Company
2952 George Washington Way
Richland, WA 99352
Phone: (509) 375-4000
Fax: (509) 375-0268

44. Bill Ryan
Gas Research Institute
8600 West Bryn Mawr Avenue
Chicago, IL 60631
Phone: (312) 399-8376
Fax: (312) 399-8170

45. Sam V. Shelton
Georgia Institute of Technology
School of Mechanical Engineering
Atlanta, GA 30332-0405
Phone: (404) 894-3289
Fax: (404) 894-8336

46. Jerry Sturgeon
Manager Refrigerant Systems Design
General Electric Appliances
Appliance Park, AP5-2N-96
Louisville, KY 40225
Phone: (502) 452-3081
Fax: (502) 452-4434

47. Sonny Sundaresan
Manager, Materials Engineering Systems
Chemistry
Copeland Corporation
1675 W. Campbell Road
Sidney, Ohio 45365
Phone: (513) 498-3528
Fax: (513) 498-3342

48. Gregory Swift
Physics Division
Los Alamos National Laboratory
K764
Los Alamos, NM 87545
Phone: (505) 665-0640
Fax: (505) 665-7652

49. John Tomlinson
Oak Ridge National Laboratory
P.O. Box 2008, MS-6070
Oak Ridge, TN 37831
Phone: (615) 574-0291
Fax: (615) 574-9338

50. Shigehiro Uemura
Daikin Industries, Ltd.
Section Manager
Global Environmental Department
Umeda Center Building
2-4-12 Naketaki-Nishi
Kita-Ku, Osaka 530
Japan
Phone: 81-6-374-9304
Fax: 81-6-373-4388

51. Maurice Verhille
Elf Atochem S.A.
4, Cours Michelet
La Defense 10, Cedex 42
92091 Paris la Defense
FRANCE

52. Tony Vogelsberg
E.I. du Pont de Nemours & Co., Inc.
Fluorochemicals Division
1007 Market Street (B-13220)
Wilmington, DE 19898
Phone: (302) 774-6484
Fax: (302) 774-8416

APPENDIX C

PAPERS PRESENTED BY SPEAKERS

The success of hydrocarbons in domestic refrigeration: energy efficient and environmentally friendly

Presented at

Refrigeration and Air Conditioning Technology Workshop
Breckenridge, CO
June 23-25, 1993

By
Manfred Doehlinger
Air Conditioning and Refrigeration Engineer

Introduction

Following the CFC ozone crisis independent scientists and technicians in the refrigeration field have become very sceptical regarding synthetic refrigerants' long term compatibility with nature and human health, despite extensive testing of the materials.

Natural, non-synthetic substances such as water, carbon dioxide, ammonia and hydrocarbons are efficient and safe refrigerants. There is long term experimental data for these substances for air conditioning and refrigeration.

In the last year hydrocarbon-based domestic refrigeration has been developed significantly and major advances in efficiency and performance have been proven in the field. Such fridges are now on the market in Europe having passed all official safety and efficiency requirements (Figure 1).

Environmental Impacts

The indirect global warming effect resulting from power production is a key issue, however experience in Europe demonstrates that hydrocarbons can have superior energy efficiency relative to R-12 and even R-134a and other proposed substitutes. This is due to the inherently superior thermoydnamic characteristics of hydrocarbons. Optimizing the design of of refrigerators offers the greatest energy saving capacity - the EPA's Super Energy Efficient Refrigerator report bears this out.

Apart from energy efficiency we must consider life-cycle environmental costs. The chlorine-based manufacture of HFCs results in the production of pernicious organo-chlorine wastes and subsequent risks to workers. Production of small quantities of hydrocarbons as refrigerants would be less environmentally costly.

Figure 2 shows the ODP and GWP profiles for various refrigerants, with GWPs over 500 and 20 year time frames. The direct global warming impacts of released refrigerants demonstrates that hydrocarbons such as butane and pentane are far less environmentally

damaging. They are not visible on this scale.

Foron and Liebherr hydrocarbon fridges have recieved German 'Blue Angel' awards for environmentally-sensitive products.

Inflammability

The inflammability of hydrocarbons must be compared to the global warming and toxicity hazards of synthetic refrigerants (HCFCs, HFCs). In refrigeration, inflammability is a local concern and is managed securely worldwide in millions of installations for heating and cooking; methane and propane are approved as alternative automotive fuels in the US and elsewhere; in the US 4 billion cans of aerosols using hydrocarbons are sold each year, without major safety impacts or liability problems.

Additional fire safety measures, eg placing thermostat and light switches outside the cabinet away from the evaporator, have been incorporated into the design of hydrocarbon fridges. Gas-proof lights are widely available at low cost (Figure 3).

New German hydrocarbon-cooled refrigerators have safety and reliability approval from the German Technical Institute (TUEV). Safety has been proven by experts in safety requirements for appliances and installations of LPG and natural gases.

One of the advantages is the small refrigerant charge, approximately one ounce, making it easy to control any danger of fire or explosion.

Market Penetration

Figure 1 illustrates the recent breakthrough of natural hydrocarbons in Germany and Europe. In the short term the three largest German companies (Bosch-Siemens, Foron and Liebherr) have adopted hydrocarbon refrigerants. In the medium term most will switch to hydrocarbons. In China the Qaingdao factory is changing to R-600a/R-290.

Technical Performance

In small size refrigerant equipment hydrocarbons can easily be used, even as a drop-in, for R-12, R-22 and R-502.

Figure 4 shows superior performance data for hydrocarbons in terms of:

* lower compression ratio
* higher thermal conductivity for better heat exchange
* very high specific entropy for low refrigerant charge
* low viscosity and hence a low air pressure drop which allows higher velocity and thus better heat exchange.

Figure 5 shows that the pressure characteristics of the R-290/R-600a blend exactly matches those of R-12 between -60°C and 10°C. For higher temperatures the pressure of the blend is lower.

Figure 6 illustrates calometric tests for a compressor (FORON) optimised for R-12, R-134a and the blend R-290/R-600a. The blend exhibits better COPs and the lowest discharge and winding temperatures over most of the range of evaporation temperatures. Hence, greater efficency and longer compressor lifetime are achieved with the blend.

Figure 7 shows performance data for a 4.8 cubic foot single temperature refrigerator containing R-12, R-134a and R-290/R-600a. The results in row 4 show that the blend does not perform satisfactorily as a drop-in. To attain better energy efficiencies changes in evaporator circuiting are needed. With these changes energy consumption is 10% lower with the blend than with any other refrigerant using the same design. Compared to R-12 and R-134a, the refrigerant charge is much lower. For R-290, the compressor capacity was too high relative to the condensor and evaporator and therefore some data for propane could not be obtained.

Data from Liebherr's fridges on sale (Figure 8) prove that the best efficiencies obtainable

with R-134a were also achievable using a R-600a refrigerant in combination with pentane blown insulation foam.
This was in spite of the relatively short time available for optimisation of the circuiting in the hydrocarbon fridge. Better results are expected with further development.

Figure 9 compares the thermodynamic properties of various refrigerants using a Whirlpool compressor which had been optimised for R-134a. In terms of COP and EER, 134a performed better than R-12, but not as well as R-600a.

With Bosch-Siemen refrigerators, power consumption and refrigeration charge have both decreased as development has progressed (Figures 10.1, 10.2, 10.3).

Bosch-Siemens latest 12.85 cubic feet model, KD 37ROO, uses only 20 g of refrigerant and needs only 0.35 kWh/day, 10.5 kWh/month and roughly 128 kWh/year (Figure 10.3). With a specific power consumption of 0.10 kWh/100 litres it is the most energy efficient fridge in the world (Figure 11). In addition it is the quietest on the market, due to the low pressure characteristics of R-600a. Although this model is much larger than the other hydrocarbon fridges it has been possible to keep the charge below 20g. Bosch-Siemen believes that the charge for the smaller fridges can also be reduced. For larger two temperature refrigerators two separate circuits will be needed, each with a charge of under one ounce.

General Advantages

As reflected in the winter ASHRAE meeting, during February 1990, hydrocarbons are superior in the following ways:

* lifecycle environmental impact: no organochlorine waste products, lesser toxic production processes
* non toxic, non-toxic combustion products
* superior reliabilty, as unlike HFCs they do not hydrolize to corrosive acids

* operates at lower discharge temperatures
* higher energy efficiency
* low cost, non-patentable, wide availabilty
* therefore an appropriate technologoy for growing developing country demand
* materials compatiblity
* smaller (less than half) of the charge required with R-134
* ease of service and maintenance

Other uses

Hydrocarbons have enormous potential for most air conditioning and refrigeration systems using up to 10lbs of CFCs today. This would include residential air conditioning units. Propane (R-290) in particular is an almost perfect, drop in substitute for R-22 and R-502 in existing air conditioning and refrigeration systems as it works without involving changes to components such as expansion devices, dryers, lubricants etc. and with only very little loss of capacity.

For decades propane has been widely used as a low temperature refrigerant, especially in the petroleum industry. Most major compressor manufacturers provide R-290 ratings to their compressors on request. It not, there is little problem as ratings for proane are very close to R-22 ratings over the typical evaporation temperatures.

FIGURE 1

FCKW-freie Kühlgeräte, Strategie einiger europäischer Hersteller

	kurzfristig		*mittelfristig*	
	Treibmittel	*Kältemittel*	*Treibmittel*	*Kältemittel*
AEG	R 134 a	R 134 a	Pentan	R 134 a
BSHG	UPT	R 134 a R 600 a	Pentan	R 134 a R600a/R290
Whirlpool (Bauknecht)	R 134 a	R 134 a	Pentan	R 134 a
Electrolux (Zanussi)	R22/142 b R 134 a	R 134 a ?	Pentan	R 134 a R600a/R290
FORON	Styropor	R 600 a/ R 290	Pentan *	R 600a/ R 290
Liebherr	Pentan	R 134 a R 600 a	Pentan	R 134 a R600a/R290
Miele	Pentan	R 134 a R 600 a	Pentan	R 134 a, R600a/R290
GRAM	R22/142b	R 134 a	?	?
Vestfrost	R 134 A	R 134 a	?	?
VR-CHINA				
Qingdao-General-Refrigerator-Factory	R 11	R 12	Pentan	evtl.R 152 a ? R600a/R290

* *Wechsel zu PUR-Isolierung angekündigt*

FIGURE 2

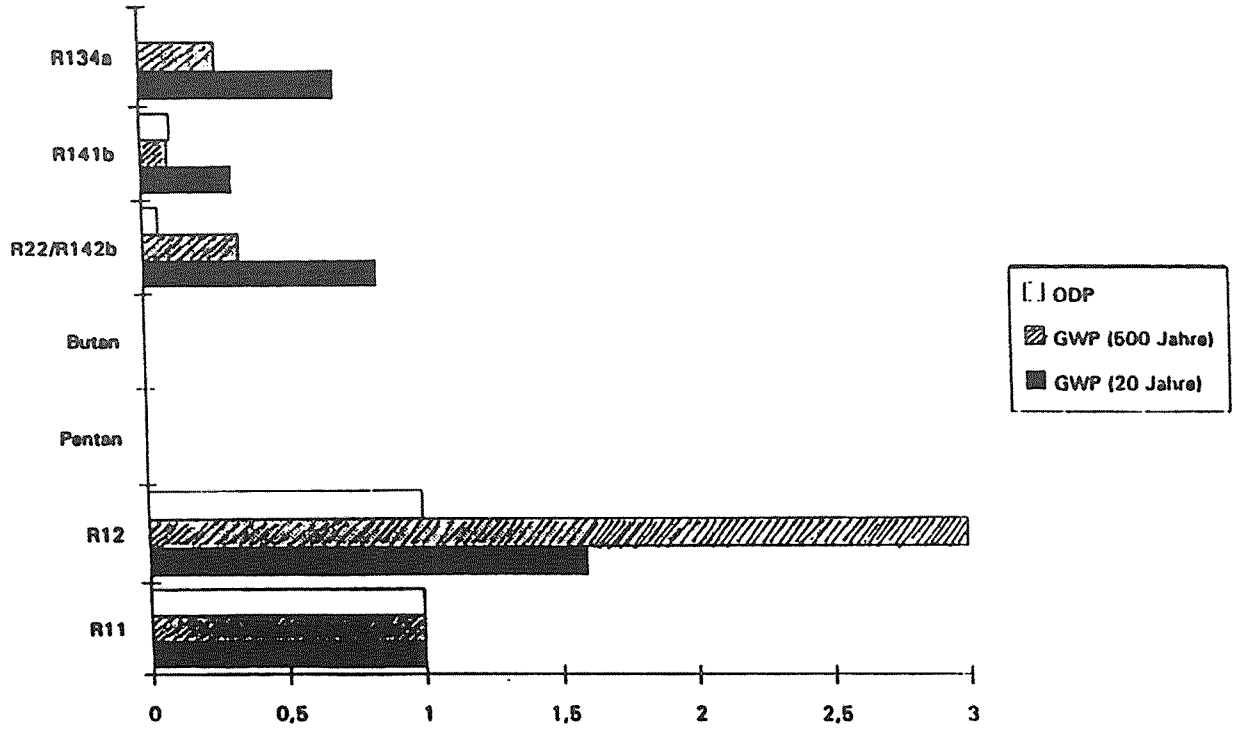
R134a
R141b
R22/R142b
Butan
Pentan
R12
R11
0
0,5
1
1,5
2
2,5
3
ODP
GWP (500 Jahre)
GWP (20 Jahre)

FIGURE 3

Clean Cooler

Bild 2

- kein FCKW
- kein FKW
- recycelbar

Verbundlose Wandkonstruktion

→ einfache Demontage

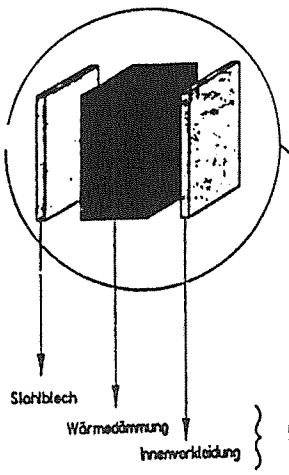

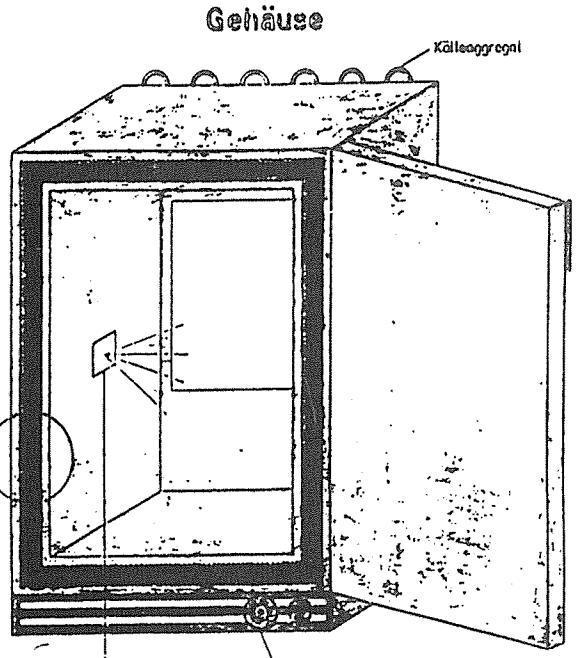

Kälteaggregat

EPS

$$\left[\begin{array}{c} CH - CH_2 \\ | \\ C_6H_5 \end{array} \right]_n$$

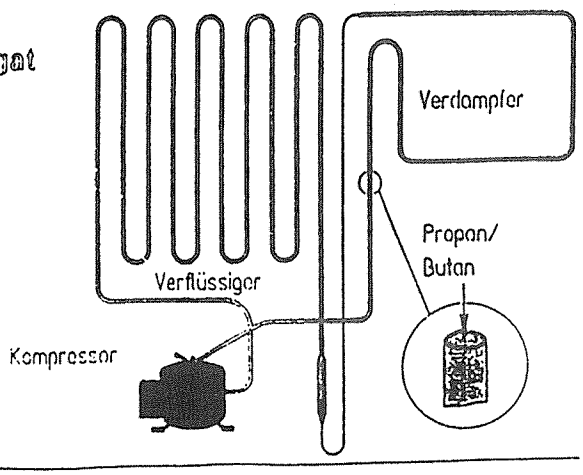

FORON , 93

FIGURE 4

Manfred Döhlinger, Mauerstr.15, NOM
12.06.1993

Tabellen zu PRO-PROPAN (R290)

Tabl.1: Some performance datas for R134a, R12, R22, R290 + 600a

Refrigerants		R134a	R12	R22	R600a	R290
Boilingpoint (°C) at 1.013 bar		-26.5	-29.3°	-40.8°	-11.7°	-42,1°
pressure in bar at	-30°C	o.35	1.00	1.64	o.47	1.65
	-20°C	1.33	1.51	2.46	o.73	2.42
	-10°C	2.01	2.19	3.55	1.09	3.42
	0°C	2.93	3.09	4.98	1.52	4.71
	10°C	4.15	4.24	6.80	2.21	6.32
	30°C	7.70	7.47	11.88	4.05	10.75
	40°C	10.16	9.63	15.27	5.32	13.66
	50°C	13.17	12.24	19.33	6.81	17.11
	60°C	16.81	15.33	24.15	8.72	21.17
Rompress.Ratio at	-30°/40°C	11.95	9,64	9,31	11.32	8.29
	-10°/50°C	6.55	5,56	5,45	6.25	5.00
Therm. Conductivity						
at 30° liquid	(mW/mK)	83	68	85	NA	89
-15° vapor	(mW/mK)	10.2	7,6	8,6	12	14.7
Spec. Entropy						
at 30° liquid	(kJ/kg K)	1.425	o.98	1.275	1.70	1,799
-15° vapor	(kJ/kg K)	o.328	o.61	o.66	NA	1,55
Viscosity						
at 30° liquid	(uPa/s)	219.9	2o9,4	194,7	NA	103.0
-15° vapor	(uPa/s)	12.1	10,9	11,2	NA	7.3

Figure 1 vapour pressure curves of different refrigerants.

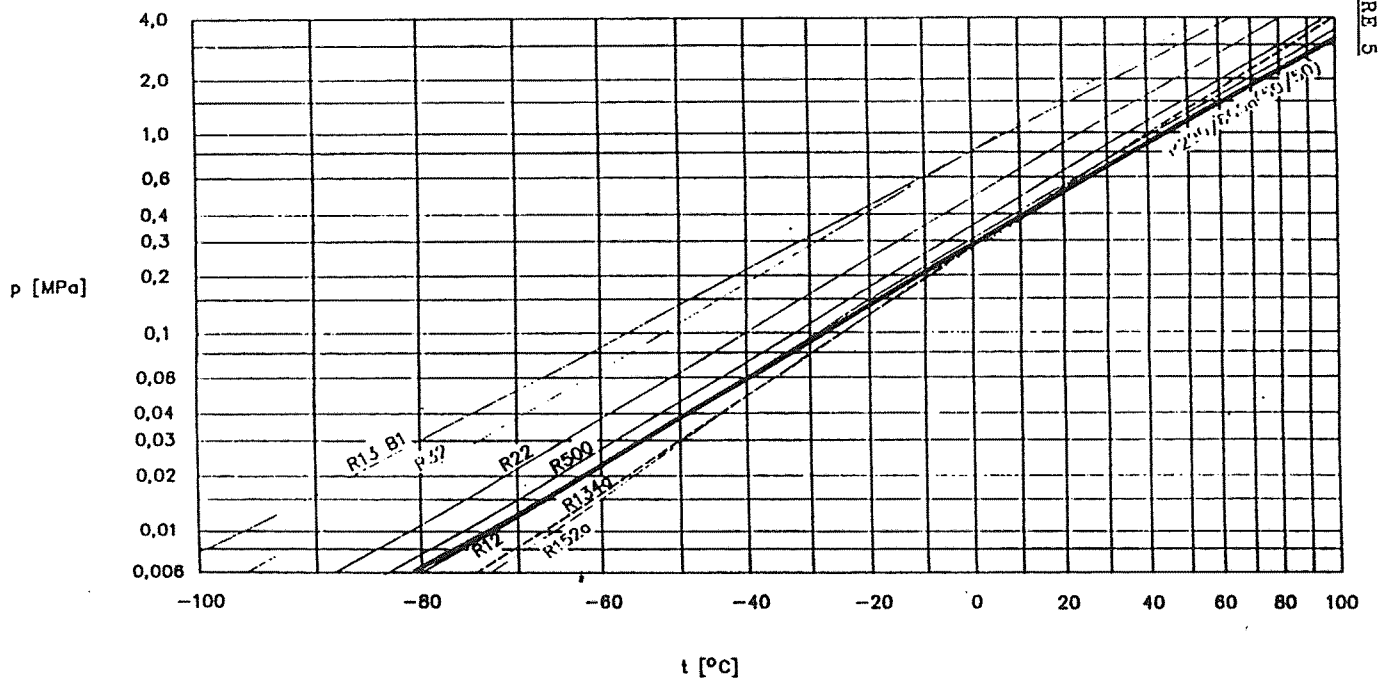

FIGURE 5

Figure 4 hermetic compressor parameters

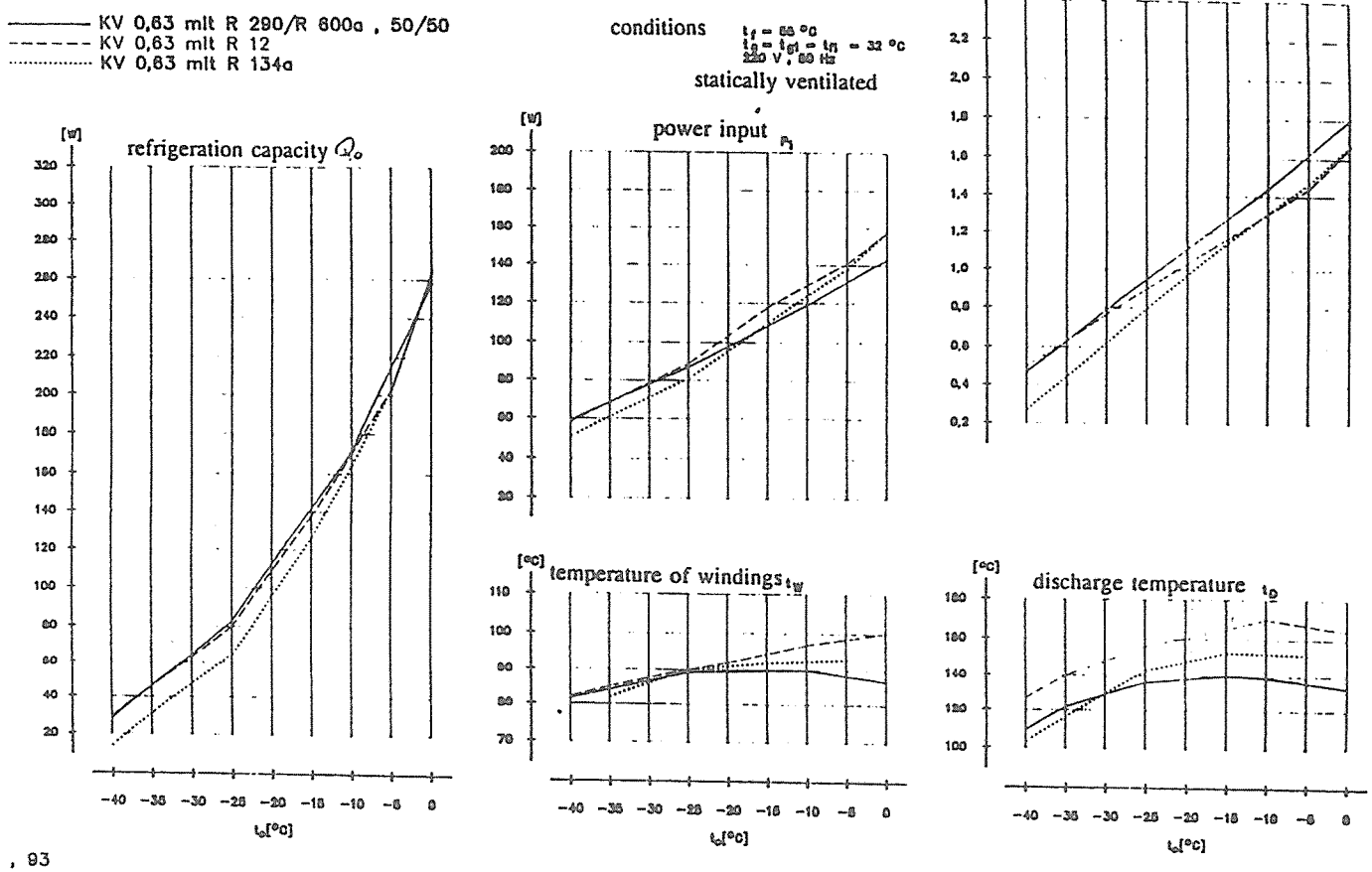

FIGURE 6

FORON , 93

FIGURE 7

Table 1

Results of energy consumption with different refrigerants at the example of the refrigerator KT 135 R with the compressor KH 0,52 N 05-2

Refrigerant	ambient temperature											
	32°C						25°C			16°C		
	RT	t_i	P_1	RT	t_i	E	RT	t_i	E	RT	t_i	E
R-12 (75 g)	100	-1	70	60	+5	1,12	37	+5	0,73	16	+5	0,37
R-134a (68 g)	100	+0,5	74	65	+5	1,26	40	+5	0,77	23	+5	0,41
R-290 (30 g)	100	-0,5	112	-	-	-	50	+5	1,0	-	-	-
R-290/ R-600a[1] (18 g)	100	-1	76	60	+5	1,23	38	+5	0,74	19	+5	0,38
R-290/ R-600a[2] (24 g)	100	-1,3	68	54	+5	1,02	35	+5	0,65	18	+5	0,34

[1] first change of the refrigerator plant

[2] second change of the refrigerator plant

RT: run time in %

t_i: average temperatur of inside in °C

P_1: performance input in W

E: Energy consumption in kWh/24 h

FIGURE 8

Liebherr Hausgeräte GmbH **Technische Entwicklung**

Kühlgeräte mit Kältemittel Isobutan im Vergleich zu R134a - Geräten

Gerät	Energieverbrauch	Kältemittel - Füllmenge
KT 1580 - 10	0,35 Kwh/24h	55 g R 134a
KT 1580 - 20	0,35 Kwh/24h	24 g R 600a
KI 1830 - 10	0,70 Kwh/24h	50 g R 134a
KI 1830 - 20	0,70 Kwh/24h	23 g R 600a
KE 1830 - 10	0,70 Kwh/24h	50 g R 134a
KE 1830 - 20	0,70 Kwh/24h	23 g R 600a
KI 2530 - 10	0,80 Kwh/24h	65 g R 134a
KI 2530 - 20	0,80 Kwh/24h	30 g R 600a
KE 2530 - 10	0,80 Kwh/24h	60 g R 134a
KE 2530 - 20	0,80 Kwh/24h	30 g R 600a

16.06.93 Wiest

FIGURE 9

Tabellarischer Vergleich der kältetechnischen Eigenschaften

(Berechnete Daten)

Theoretical ASHRAE Cycle		R12**	R134a**	% Var.	R290**	% Var.	R600a H	%
Suction Pressure (absolute)	[bar]	1.240	1.070	-13.71 %	2.032	63.87 %	0.604	-51,
Discharge Pressure (absolute):	[bar]	12.100	13.190	9.01 %	17.200	42.15 %	6.910	-42,
Compression Ratio:		9.76	12.33	26.33 %	8.46	-13.26 %	11.44	17.
Discharge Temperature (isentropic)::	[°C]	124.5	117.5	-7.0	115.3	-9.2	101.5	-2
Suction Specific Volume:	[m³/kg]	0.16530	0.22820	38.05 %	0.27420	65.88 %	0.73860	346.
Evaporation Enthalpy Difference:	[KJ/kg]	141.84	187.02	31.86 %	353.97	149.56 %	334.70	135,
Power Input x 150kcal/h of Cool.Capacity:	[W]	63.70	62.80	-1.41 %	63.70	0.00 %	59.80	-6.
Mass Flow x 150kcal/h of Cool.Capacity:	[kg/h]	4.420	3.360	-23.98	1.770	-59.95 %	1.877	-57
Displac. x 150kcal/h of C.C. (2900 RPM):	[cm³/giro]	4.199	4.410	5.03 %	2.790	- 33.56 %	7.968	89.
C.O.P.:	[W/W]	2.738	2.780	1.53 %	2.738	0.00 %	2.917	6.
E.E.R.:	[kcal/hW]	2.350	2.390	1.70 %	2.350	0.00 %	2.508	6.

FIGURE 10.1

PRODUCTINFORMATION: Free-standing appliance at table height, with compressor SMK-T

TYPE/SALES DESIGNATION : K T 1 5 L 0 4

DESIGN AND TYPE		
freestanding appliance/suitable for building under		*/*
freestanding appliance with worktop at table height		*
built under appliance/integratable		-/-
built in appliance/integratable		-/-
number of outer doors/external drawers		1/-
door hinging		r/u
decor frame	standard/retrofit option	-/*
star rating of freezer section		***
climate rating		N
DIMENSIONS		
height	cm	85
width	cm	55
depth including wall clearance	cm	60
height with worktop removed	cm	82
width with door open	cm	58
depth with door open or drawer pulled out	cm	112
WEIGHT WHEN EMPTY	kg	33
PERFORMANCE CHARACTERISTICS		
gross capacity, total	Litre	145
net capacity, total	Litre	140
usable capacity, refrigerator section	Litre	121
incl. stay-fresh compartiment, max./min.	Litre	-
special compartment	Litre	-
usable capacity, freezer compartment	Litre	19/-
freezing capacity in 24 hrs	kg	-
specially per 100 l usable capacity	kg	-
storage time in the event of power cut	hours	-

DEFROSTING METHOD		
refrigerator:		
manual		-
semi-automatic		-
automatic		*
freezer section:		
manual		*
semi-automatic		-
automatic		-
EQUIPMENT FEATURES		
refrigerator:		
egg racks	no. of eggs	14
door compartm. with flap or sliding door	no.	2
door shelves and/or boxes	no.	4
shelves in refrig. compartm.	no.	3
incl. adjustable shelves or support grill	no.	2
boxes in refrigerator compartment	no.	1
freezer section:		
max.height	cm	14
ice cube trays	no.	1
ELECTRICAL CONNECTION		
voltage	V	220-240
connected load	W	100
POWER CONSUMPTION		
in 24 hours	kWh	0.74
specially per 100 l usable capacity	kWh	0.53
in 30 days	kWh	22.2
complies with German safety regulations		*
fitted with interference suppressor		*
operation instructions/manuals		*
installation instructions		*
CFC QUANTITIES		
+ Insulation Nature: Pentan	g	
+ Refr.circle Nature: Butan	g	30

S I E M E N S - Product Specification - (KTL1501) Date: 14.06.93

FIGURE 10.2

PRODUCTINFORMATION: Free-standing appliance at table height, with compressor ZMK-T

TYPE/SALES DESIGNATION : K T 1 5 R S 0

DESIGN AND TYPE		
freestanding appliance/suitable for building under		*/*
freestanding appliance with worktop at table height		*
built under appliance/integratable		-/-
built in appliance/integratable		-/-
number of outer doors/external drawers		1/-
door hinging		r/w
decor frame standard/retrofit option		-/*
star rating of freezer section		-
climate rating		SN
DIMENSIONS		
height	cm	85
width	cm	55
depth including wall clearance	cm	60
height with worktop removed	cm	82
width with door open	cm	58
depth with door open or drawer pulled out	cm	112
WEIGHT WHEN EMPTY	kg	31
PERFORMANCE CHARACTERISTICES		
gross capacity, total	Litre	144
net capacity, total	Litre	142
usable capacity, refrigerator section	Litre	142
incl. stay-fresh compartiment, max./min.	Litre	-
special compartment	Litre	-
usable capacity, freezer compartment	Litre	-/-
freezing capacity in 24 hrs	kg	-
specially per 100 l usable capacity	kg	-
storage time in the event of power cut	hours	-

DEFROSTING METHOD		
refrigerator:		
manuel		-
semi-automatic		-
automatic		*
freezer section:		
manual		-
semi-automatic		-
automatic		-
EQUIPMENT FEATURES		
refrigerator:		
egg racks	no. of eggs	12
door compartm. with flap or sliding door	no.	2
door shelves and/or boxes	no.	4
shelves in refrig. compartm.	no.	4
incl. adjustable shelves or support grill	no.	3
boxes in refrigerator compartment	no.	1
freezer section:		
max.height	cm	-
ice cube trays	no.	-
ELECTRICAL CONNECTION		
voltage	V	220-240
connected load	W	90
POWER CONSUMPTION		
in 24 hours	kWh	0.48
specially per 100 l usable capacity	kWh	0.34
in 30 days	kWh	14.4
complies with German safety regulations		*
fitted with interference suppressor		*
operation instructions/manuells		*
installation instructions		*
CFC QUANTITIES		
+ Insulation Nature: Pentan	g	
+ Refr.circle Nature: Butan	g	22

S I E M E N S - Product Specification - (KTR1570) Date: 14.06.93

FIGURE 10.3

PRODUCTINFORMATION: Free-standing (upright) appliance, with compressor ZMK-T

TYPE/SALES DESIGNATION : K D 3 7 R 0 0

DESIGN AND TYPE		
freestanding appliance/suitable for building under		*/-
freestanding appliance with worktop at table height		-
built under appliance/integratable		-/-
built in appliance/integratable		-/-
number of outer doors/external drawers		1/-
door hinging		r/w
decor frame	standard/retrofit option	-/-
star rating of freezer section		-
climate rating		SN
DIMENSIONS		
height	cm	187
width	cm	66
depth including wall clearance	cm	66
height with worktop removed	cm	-.
width with door open	cm	69
depth with door open or drawer pulled out	cm	128
WEIGHT WHEN EMPTY	kg	76
PERFORMANCE CHARACTERISTICES		
gross capacity, total	Litre	366
net capacity, total	Litre	364
usable capacity, refrigerator section	Litre	364
incl. stay-fresh compartiment, max./min.	Litre	-
special compartment	Litre	-
usable capacity, freezer compartment	Litre	-/-
freezing capacity in 24 hrs	kg	-
specially per 100 l usable capacity	kg	-
storage time in the event of power cut	hours	-

DEFROSTING METHOD		
refrigerator:		
manuel		-
semi-automatic		-
automatic		*
freezer section:		
manual		-
semi-automatic		-
automatic		-
EQUIPMENT FEATURES		
refrigerator:		
egg racks	no. of eggs	8
door compartm. with flap or sliding door	no.	1
door shelves and/or boxes	no.	8
shelves in refrig. compartm.	no.	6
incl. adjustable shelves or support grill	no.	5
boxes in refrigerator compartment	no.	3
freezer section:		
max.height	cm	-.
ice cube trays	no.	-
ELECTRICAL CONNECTION		
voltage	V	220-240
connected load	W	90
POWER CONSUMPTION		
in 24 hours	kWh	0.35
specially per 100 l usable capacity	kWh	0.10
in 30 days	kWh	10.5
complies with German safety regulations		*
fitted with interference suppressor		*
operation instructions/manuells		*
installation instructions		*
CFC QUANTITIES		
+ Insulation Nature: Pentan	g	
+ Refr.circle Nature: Butan	g	20

S I E M E N S - Product Specification - (KDR3700) Date: 14.06.93

Figure - 11

SIEMENS

Cooler - FRIDGE 12.85 cu.ft.

energic consumption .35 kWh/d
refrigerant R-600a
charge (R600a) 20g (.7oz)
noise level < 35 dbA

Automatik-Kühlschrank KD 37 R 00 mit Super-Verbrauchswerten.

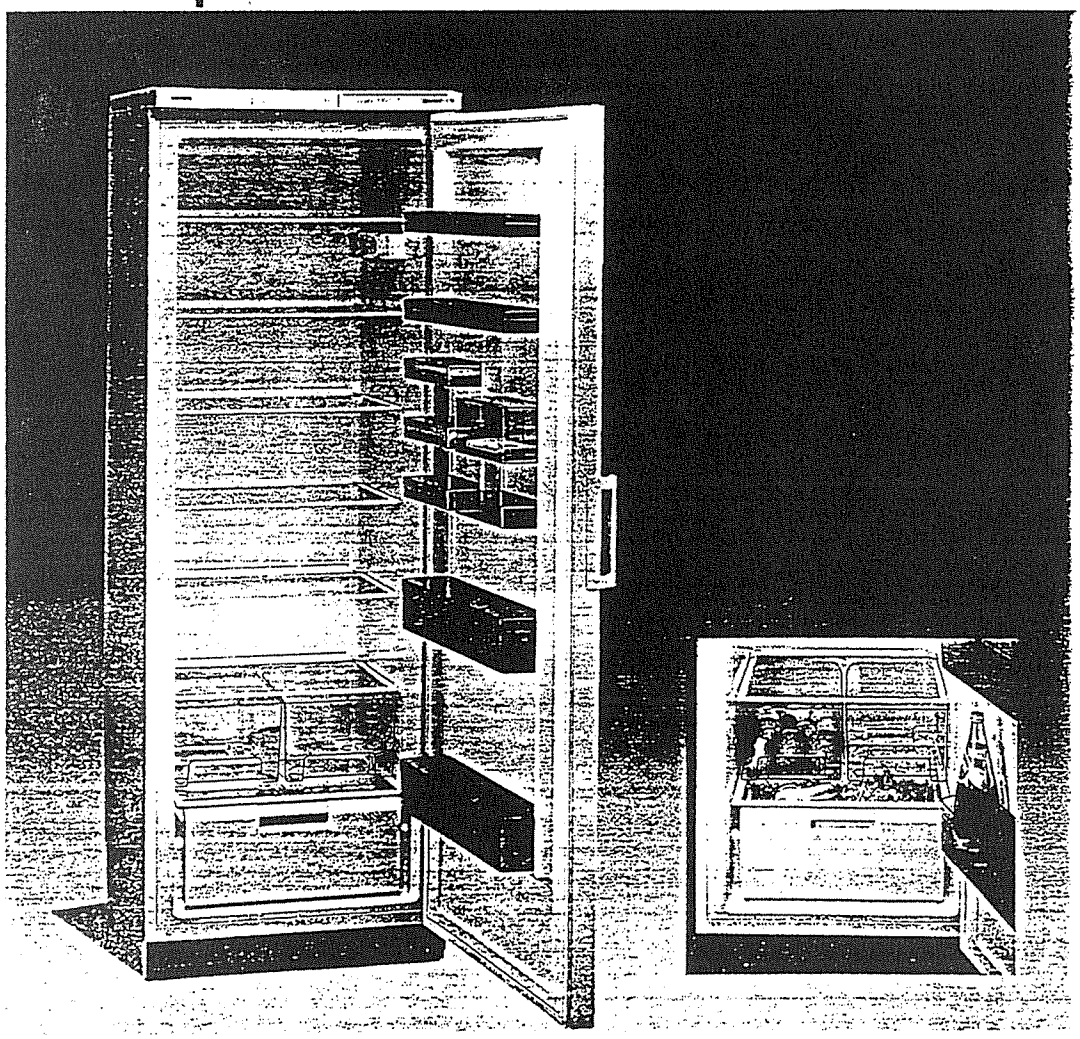

Free-Piston Stirling and Rankine Cooling

D.M.Berchowitz
Sunpower, Inc

1) Technology description

Two applications of the free-piston / linear motor technology will be described, namely: free-piston Stirling coolers and free-piston Rankine (vapor compression) compressors.

Free-piston Stirling coolers

These machines employ the Stirling cycle for cooling, which under ideal circumstances of isothermal heat transfer, has Carnot efficiency. This cycle operates entirely in the gas phase, so none of the typical refrigerants are required (such as CFC's and HCFC's). Helium or a non-explosive Hydrogen gas mixture is used. Proper motion of the moving parts is obtained by utilizing the pressure forces developed by the cycle. There is no crank shaft, connecting rod or any other kinematic components. Only two moving parts are required. Since side loads are extremely small, gas bearings are used which ensure non-contact operation and high mechanical efficiencies. Since the amplitude of a linear motor is directly proportional to the drive RMS voltage, modulation of lift is possible by controlling input voltage. Units are hermetically sealed.

Free-piston Rankine compressors

This is a conventional refrigerator compressor in which the drive motor has been replaced by a linear motor. Again, since side loads are very small, gas bearings are used which allows the use of oil-free operation. The removal of the kinematic mechanism and the oil lubrication results in a much higher mechanical efficiency and hence overall efficiency. Owing to the flexibility of amplitude and mean position (controlled by a DC voltage), these machines are able to tolerate a wide variety of refrigerants without modification. Modulation of lift is obtained by controlling the input RMS voltage.

2) Application

In principle, taken together, the free-piston Stirling and Rankine machines are able to cover all cooling applications from a few 10's of Kelvin to domestic air conditioning and heat pumping. They are positive displacement machines and would only be limited to the point where turbo-type machines make more sense (usually in terms of capacity). More specifically:

Free-piston Stirling coolers

Our studies and prototypes suggest that free-piston Stirlings should be able to achieve similar or slightly better performance to high efficiency free-piston Rankine machines at

domestic refrigeration temperatures (about -26°C). Below these temperatures the Stirling does increasingly better while above they do poorer than Rankine. Wherever it is necessary to cascade a Rankine, the Stirling will do better. Both in performance and in cost (assuming large production numbers). The Stirling also scales well to small sizes and may enjoy a margin over the Rankine for small domestic refrigerators requiring only a few tens of Watts of lift. Excellent applications include Biological refrigeration, vaccine coolers, low temperature electronics and some low temperature applications in the pharmaceutical industry.

Free-piston Rankine compressors

These units do well at domestic refrigeration temperatures where they already hold the record in COP at the standard test point. At temperatures above this they become even more competitive with other technologies. So heat pumps and air conditioners are perfect applications. Also, they are useful with refrigerants which are not compatible with oil lubrication.

3) Benefits

Free-piston Stirling coolers

Non-CFC, HCFC or HFC cooling. High efficiency. Low cost. Long life and high reliability.

COP's of around 60% of Carnot should be possible at domestic refrigeration temperatures. Best so far achieved is 32%.

Free-piston Rankine compressors

Non-CFC cooling (would use HFC or ammonia or H_2S). High efficiency. Low cost. Long life and high reliability.

Improvements of between 9 and 15% have already been achieved and verified at standard ASHRAE conditions for refrigerators. At least 60% of Carnot should be possible.

4) Technical issues

Free-piston Stirling coolers

Very little hardware work has been done for machines intended for operation at above 100K and below 240K. Hardware for domestic refrigeration has also been poorly funded. Prototype units should be built to verify the theoretical predictions of performance at these relatively warmer temperatures. Experiments should be conducted with Hydrogen gas mixtures and improved internal heat exchangers. External heat transfer in higher capacity machines would likely be handled by heat pipes. Work should be directed in building and interfacing the required heat pipe technology. Cost analysis of production is not well identified.

Free-piston Rankine compressors

Developing these machines for warmer and higher capacity applications. All work has focused on domestic refrigeration applications. Investigate the advantages or otherwise of continuous modulation. Costing analysis.

5) Economics:

Free-piston Stirling coolers

Only one analysis has been completed (GE Corp) for units designed for large domestic refrigerators. Costs appear to be in the range of $30 / unit for 1 million units per year for a production optimized design. Investment cost was estimated at $20.24 million.

Free-piston Rankine compressors

No cost analysis has been performed. However, the free-piston units have less components and are smaller than the conventional units. In addition, no oil is required, which for HFC units is a significant cost saving. It is generally expected that the free-piston units will be less expensive than conventional units.

6) Technology outlook:

Free-piston Stirling coolers

Development status for domestic refrigeration is on hold as no further funding has been assured. Units for high temperature superconductivity are currently under development. Production could begin within one year if unit costs could be reduced to $500/unit.

A few warmer temperature units have been constructed for use aboard the space shuttle. The market potential of high tech applications is not seen to be very large.

Free-piston Rankine compressors

Relating to domestic refrigeration, initial development is complete. Design for manufacture will begin the process to full commercialization for this field of use. Actual availability of product could be within two years.

Other applications for air conditioning or markets requiring oil free operation require additional product development and definition.

STIRLING CYCLE REFRIGERATION

A Discussion Prepared for the

ORNL / DOE / AFEAS

Refrigeration and Air Conditioning Workshop

By
Pete Riggle and Barry Penswick
STIRLING TECHNOLOGY COMPANY

Breckenridge, Colorado
June 23 - 25, 1993

1.0 TECHNOLOGY DESCRIPTION

The Stirling Machine

The Stirling cycle was selected from alternative candidate technologies because it is environmentally acceptable, has the potential for long maintenance-free life, high COP, and acceptable manufacturing cost. The free piston Stirling refrigerator employed has three moving assemblies, each supported by flexural bearings. The flexural bearings rely on the concept of the endurance limit to provide essentially infinite life and a statistically predictable failure rate. In this application the flexural bearings are able to maintain clearance seals with about one mil of radial clearance. With this amount of radial clearance the seal leakage effects are acceptable and there is no rubbing between piston and cylinder surfaces. No lubricants are required.

The configuration employed is shown in Figure 1. The displacer flexural bearings have been eliminated from Figure 1 to avoid disclosure of proprietary technology. The three moving parts are 1) the piston and motor armature assembly, 2) the displacer assembly, and 3) the vibration isolator, which is a passive auxiliary mass damper. The piston causes pressure in the helium working fluid to rise and fall more or less uniformly throughout the Stirling cycle portion of the machine, which is the portion of the machine to the left of the left piston face in Figure 1. The displacer is essentially a hollow piston which moves the working gas to the heat acceptor at the portion of the cycle when pressure is falling and moves the working gas to the heat rejector at the portion of the cycle when pressure is rising. The gas expansion and compression effects cause cooling and heating effects, resulting in the pumping of heat. Motions of the piston and displacer are essentially sinusoidal in time. The displacer is driven by the pressure wave with a motion that leads the power piston motion by about 90 degrees. This phase lead is such that the expansion and compression effects are maximized, resulting in the greatest heat pumping capacity and efficiency.

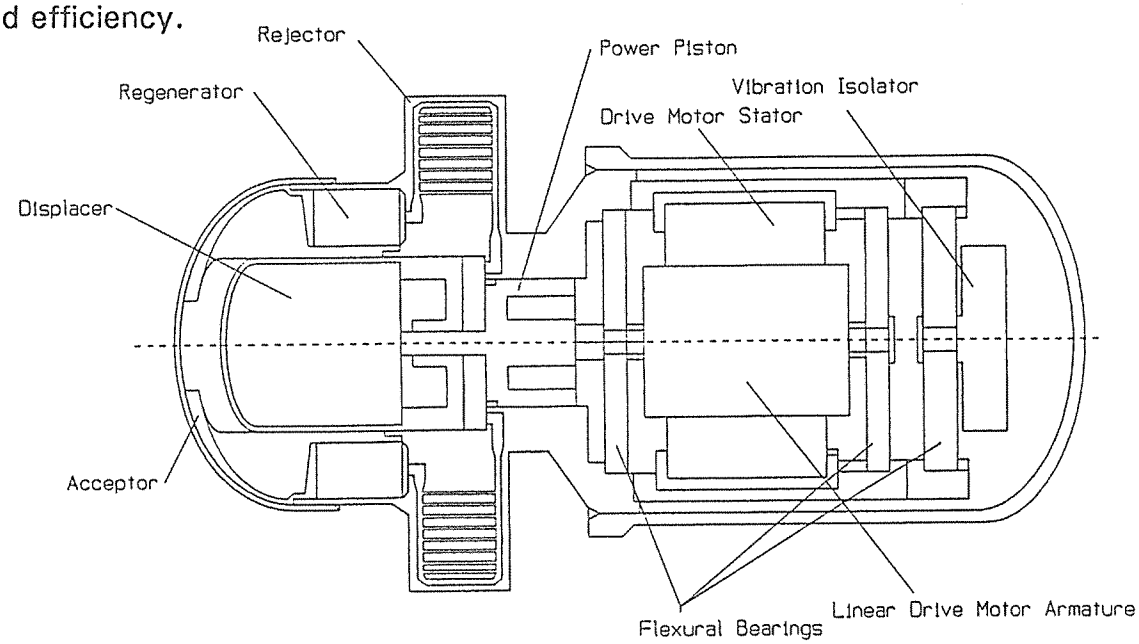

Figure 1. Free Piston Stirling Refrigerator Concept

The theory of linear motors indicates that the best motor efficiency occurs when the piston and motor armature assembly is in mechanical resonance at the operating frequency. Therefore, the design is specified to assure that the spring effects provided by the armature support flexural bearings, and by the gas spring effects of the working gas and the gas in the motor compartment, are just right to resonate the effective moving mass of the piston and motor armature assembly. The displacer operates as a freely oscillating mass spring damper assembly driven by the oscillating pressure of the working gas. The displacer is sprung by the displacer flexural bearings, not shown in Figure 1. The displacer is damped by windage effects of gas flowing through the heat exchangers.

Heat Exchangers and Heat Transport Systems

The heat exchanger complement is typical of the three heat exchangers required for Stirling coolers and engines. Heat enters the machine through a heat acceptor. The energy fluctuation required to fluctuate the working gas rapidly between acceptor and rejector temperatures is provided by the regenerator. Heat leaves the machine through the heat rejector. In the design presently under study, the acceptor uses internal and external fins. The regenerator can be either sintered random wire or polyester fiber. The rejector currently under study uses tubes embedded in fins.

Due to the basic configuration of standard domestic refrigerator cabinets, the Stirling cycle refrigerator will have to be located in the lower portion of the refrigerator currently occupied by the vapor compression system compressor. Unlike for the vapor compression system, there is no intrinsic process occurring in the Stirling cycle which will pump a cold working fluid to the freezer compartment or "hot" fluid to the heat rejection heat exchanger. This energy transfer must be carried out via an independent heat transport system coupling the Stirling cycle heat exchangers to the respective "cold" and "hot" portions of the domestic refrigerator.

The acceptor and rejector heat exchangers are critical because they provide the energy flow interface from the Stirling cycle to both the load and the environment. The system performance is highly dependent on the temperature rise across the acceptor and the temperature drop across the rejector. Also, the additional energy required to operate auxiliary equipment (pumps and fans) and their costs must be considered in the selection of the heat transport system. Heat exchanger effectiveness is typically maximized by making the heat exchanger surface area as large as possible. However, large surface areas can result in significant unswept volumes within the Stirling machine which compromise Stirling cycle performance and lead to excessive hardware costs.

Throughout this phase of the GCR (Gas Cycle Refrigerator) evaluation a standard upright refrigerator cabinet configuration was employed. In this arrangement the freezer space is located in the upper portion of the cabinet above the refrigerated food space. The lower portion of the cabinet is allocated for the GCR refrigerator and its associated equipment. The selected configuration was considered to be quite conservative and placed a number of restrictions on the GCR hardware and system performance. However, since this cabinet layout can be easily modified to

configurations more adaptable to the GCR, the system evaluated in the Phase I effort clearly represents the lower boundary of refined GCR's performance capabilities.

The reference Phase I heat transport system is based on the use of a pumped liquid loop coupling the Stirling cooler with the freezer compartment and an air-cooled heat rejector supplied with ambient air via a fan/blower. The acceptor heat exchanger surrounds the Stirling cycle's helium heat exchanger and is insulated over its exterior to minimize losses. The rejector heat exchanger employs thermal conduction through the pressure vessel wall coupled with air-cooled extended surfaces on the pressure vessel exterior to reject the cycle waste heat.

Throughout the Phase I effort it was evident that the proposed heat transport system described above would have a significant impact on the refrigerator system COP for two reasons: 1) both heat transport systems introduce significant temperature differences between the Stirling cycle heat exchangers and the various source and sink temperatures, and 2) the power required to operate the auxiliary equipment is large enough to degrade COP to unacceptable levels. At present, the only obvious alternative to improve system COP (other than radically increasing Stirling cycle efficiency) is the use of a "passive" heat transport system which will totally eliminate the auxiliary power requirements.

A heat pipe represents the logical device to satisfy the passive heat transport system requirements. However, issues concerning toxicity of potential heat pipe working fluids, status of heat pipe technology as it applies to low cost manufacturing, and the ability of the heat pipe to effectively operate over a 5 to 6 foot elevation in a 1 G environment all need to be resolved prior to committing to this concept. Because of the significant impact on the overall viability of the proposed GCR, STC will recommend an aggressive heat pipe evaluation during the next phase of the GCR effort.

2.0 APPLICATION

The application currently under study is the domestic refrigerator. Participants in the Phase I study just completed are Stirling Technology Company and the Americold Division of White Consolidated Industries, Incorporated. If the ongoing study does establish technical and economic feasibility for Stirling machines in what has been vapor cycle machine applications, it would be reasonable to expect significant market penetration into all vapor cycle applications, including domestic refrigerators, residential and commercial heat pumps, commercial refrigeration, and smaller markets, such as biological coolers.

3.0 BENEFITS

Benefits include elimination of CFC and HCFC refrigerants, elimination of refrigeration lubricants, and potentially high efficiency, particularly with 2-stage coolers, which are easier to implement in a Stirling machine than in vapor cycle machines.

4.0 TECHNICAL ISSUES

The basic Stirling cycle machine has very high performance. Computations using validated computer codes indicate the COP could be 1.97 for a single stage Stirling cooler, if the temperature differences and the pumping losses could be eliminated for the heat transport system which connects the Stirling machine acceptor with the cold compartment. The temperature difference of the current reference design heat transport system drops the COP from 1.97 to 1.57. Pumping power of the current heat transport systems drops the COP from 1.57 to 1.32. A 10% reduction in input power can be achieved by a 2-stage Stirling approach, which is less complicated to implement than a 2-stage vapor cycle approach. From these COP figures, it is clear that reducing the temperature drops and pumping power of the auxiliary heat transport loops should be given high priority. In addition, further work on the Stirling machine internal heat exchangers is expected to drive the COP values higher. The reported COP values are computed with validated codes, and are therefore expected to be achievable.

Remote and close coupled heat transport configurations were explored In the Phase I study. The remote configurations allow separation of the Stirling machine and the point of heat removal from the food compartment. The close coupled integral Stirling refrigerator configuration places the Stirling machine acceptor directly into the point of heat removal from the cold compartment. The close coupled integral Stirling arrangement is ideal from an energy efficiency point of view, but is applicable to only a small portion of the currently popular domestic refrigerator product configurations. An alternative close coupled arrangement which has not been studied, but is worthy of further study, is the split Stirling arrangement. In this arrangement the compressor occupies a location at the bottom rear of the refrigerator system, as vapor cycle compressors currently do, and the expander, which is much smaller, occupies a location in the freezer compartment. The remote heat transport configurations studied include 1) a pumped liquid loop, 2) a gas loop, and 3) phase change loops, including gravity reflux boilers and heat pipes. Liquid loops are compact and easily insulated. Temperature differences and pumping loss are significant and there is concern for pump life. All heat transport fluids explored have increased pumping power requirements at normal operating temperatures. Gas flow loops pose problems of duct volume, duct insulation, fan power requirement, and frost buildup on the Stirling acceptor. In general the gravity reflux boiler is considered unacceptable because it requires the Stirling machine to be located at the top of the domestic refrigerator system where the space is desired for easy access to stored food. The heat pipe is promising and has been recommended for serious study in Phase II of the program.

5.0 ECONOMICS

The fundamental approach employed in the evaluation of the current GCR from the cost and manufacturing viewpoint was to focus on the truly unique components making up the Stirling cycle portion of the system. These selected components were compared, where possible, to components of conventional vapor compression

systems which provide similar functions, for example the GCR's linear drive motor and a rotary motor of a convention refrigerator drive. A total of 3 components or subcomponent assemblies were evaluated: 1) flexures which provide the gas clearance seals on the piston and displacer, 2) linear drive motor, and 3) the displacer/power piston assembly.

Since it was impossible to place absolute dollar values on the individual components, an attempt was made to define there relative cost in comparison to existing components assuming that the investment had been made in the necessary tooling/manufacturing equipment to support the manufacturing rate common to the domestic refrigeration market.

The basic conclusions of this review were that the GCR concept can be brought to mass production with a sufficient further design refinements and a major investment in new or modified tooling. This latter point is critical since the basic components making up the proposed GCR differ radically in form and function from those employed in existing refrigeration systems.

GCR system cost is a major concern; however, there are no fundamental reasons that its costs cannot be comparable to that of high performance refrigeration systems in the future. All cost reduction efforts must be carefully evaluated against their impact on the performance of the GCR system since the relative performance advantages of the GCR in comparison to advanced vapor compression systems are relatively small, with the primary advantage being environmental.

6.0 TECHNOLOGY OUTLOOK

Development Status

As shown in Figure 2, the Stirling machine has been developed and demonstrated in the laboratory as a maintenance free long life free piston refrigerator with excellent potential for high COP. All of the technologies required to achieve long life and efficient performance have been proven. The next step in Stirling machine development for domestic refrigerators involves extensive thoughtful product design to achieve manufacturability and low cost without sacrificing demonstrated potential for efficiency, freedom from maintenance, and long life. Additionally, further systems integration work is required to integrate the cooler with the domestic refrigerator system without excessive loss of efficiency or excessive cost for the heat transport connection between the Stirling machine and the cold space.

Timetable for Commercialization

With serious intent and serious design for commercial implementation, the Stirling domestic refrigerator could be a product by the turn of the century. On the basis of our impressions of the interests of the refrigerator industry, it appears that serious design for commercial implementation will not be paid for by the industry. The situation is chicken and egg. Support from the industry for commercial design will not

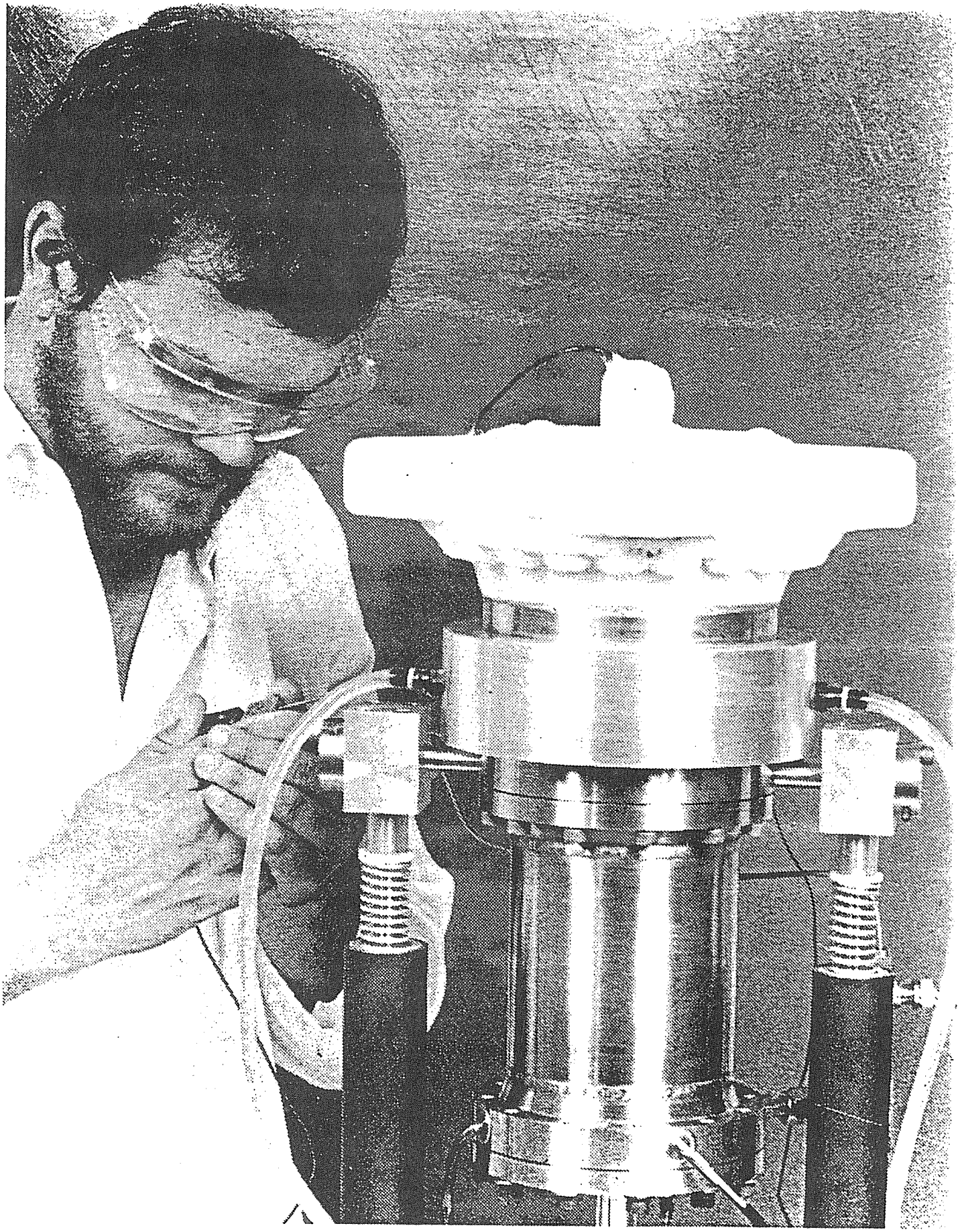

Figure 2. STC Stirling Domestic Refrigerator Unit

come until the costs can be demonstrated to be low. Costs will not be demonstrated to be low until support exists for serious design for commercial implementation. Fortunately, DOE has been far sighted enough to nurture the development to date. Realistically, to achieve correct answers on the potential for commercial competitiveness of Stirling refrigerators, the government will probably have to pay for the serious design work we would historically have expected to come from industry.

Qualitative Assessment of Market Penetration

Assuming that the Stirling cycle domestic refrigerator will ultimately compete with the vapor cycle refrigerator in terms of performance and cost, which seems likely to the authors, Stirling would be expected to replace the vapor cycle in domestic refrigerator applications as a result of consumer conscience.

STM4-120RF AS REFRIGERATOR FOR SUPERMARKETS

Roelf J. Meijer and Edmond C. Miniatt
Stirling Thermal Motors, Inc., United States

• Abstract

The search for harmless working media for cooling systems with respect to ozone depletion has led STM to reconsider the Stirling cycle for this purpose. By using the "short block" of the STM4-120 engine and by developing heat exchangers based on new insights in the Stirling cycle, a reliable, high performance machine can be developed in a short time.

The Stirling cycle is well known for being efficient, clean and quiet for engine and cryocooling applications. Due to its adiabatic behavior, it is generally considered to be inefficient for small temperature differences between the compression and expansion side. However, STM has discovered ways to improve the efficiency considerably.

The prediction of performance of the new refrigerator, designated the STM4-120RF, now being fabricated, will be given and can be compared with the results of existing vapor compressor units.

The cold production of the STM4-120RF does not depend heavily on the temperature ratio between the ambient and the "cold temperature" as the vapor compression system does, and could therefore have a yearly economic advantage over the vapor compressor system.

• Introduction

Due to the fact that the well known vapor-compressor refrigerating system with CFC or HCFC as the working medium will eventually be banned, the industry is looking for alternative refrigerating machines.

In this paper we are describing the modification made to the well known Stirling Thermal Motors all-purpose engine, the "STM4-120", in order to be suitable as a supermarket refrigerator. The use of the "short block" (drive and power control) of STM's engine fits the policy of STM to use the major part of the engine for different applications.

STM4-120 DH - heated directly by flue gases

STM4-120 RH - heated remotely by using heat pipe technology

STM4-120 DS - Heated directly by concentrated sunlight

and now we are introducing:

STM4-120 RF - including heat exchangers for refrigeration (see Figure 1)

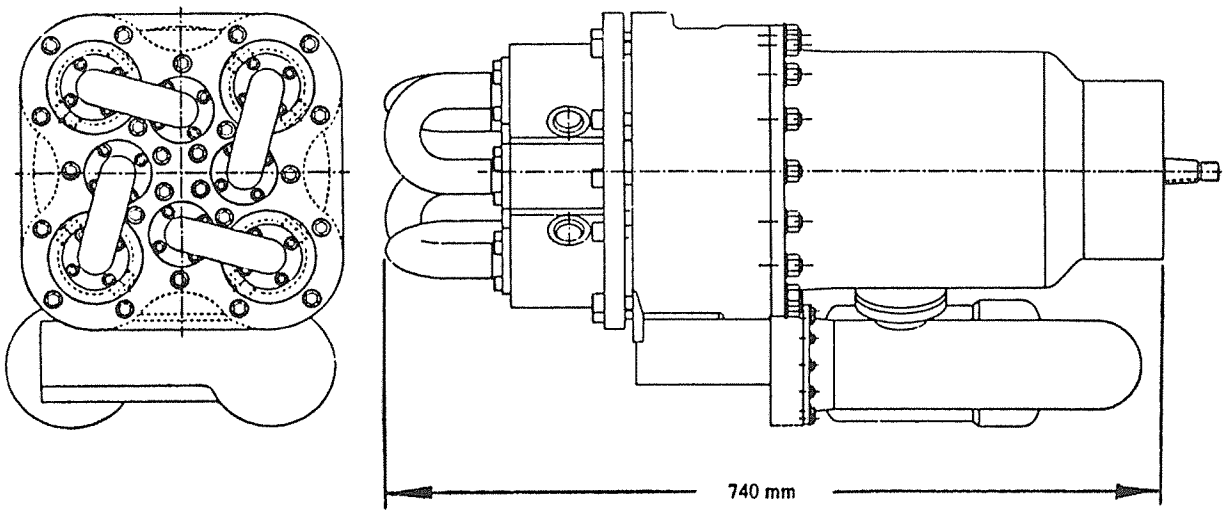

Figure 1
STM4-120 RF

- **Technology Description**

Historically, Stirling cycle machines have been known and used with great success for cryocooling, and not for food refrigeration. Why is this?

In the Philips Technical Review of 1954, Köhler and Jonker state that, due to the losses, the Stirling cooling machine (later called the Philips cryocooler) has the best efficiency between -80°C and -200°C. Figure 2 shows the ratio of the efficiency divided by the Carnot efficiency plotted versus the cold expansion temperature.

The decline of η/η_c at low temperature is due to the fact that the heat conduction losses, insulation losses and especially the regenerator losses are proportional to the temperature difference between the ambient and the temperature of the cold production, but the cold production by itself decreases with lower temperature.

The decline of η/η_c at higher expansion temperature is caused mainly by mechanical losses and by the so-called "adiabatic" losses (losses in efficiency due to the adiabatic behavior of the gas in the cycle). The mechanical losses are always present, but the magnitude is dependent on the design of the drive. The adiabatic losses are approximately proportional to the pressure ratio.

Considering all these effects, it all boils down to raising the efficiency (or COP), by making the adiabatic behavior of the normal Stirling cycle, with the unwanted temperature fluctuation, as small as possible.

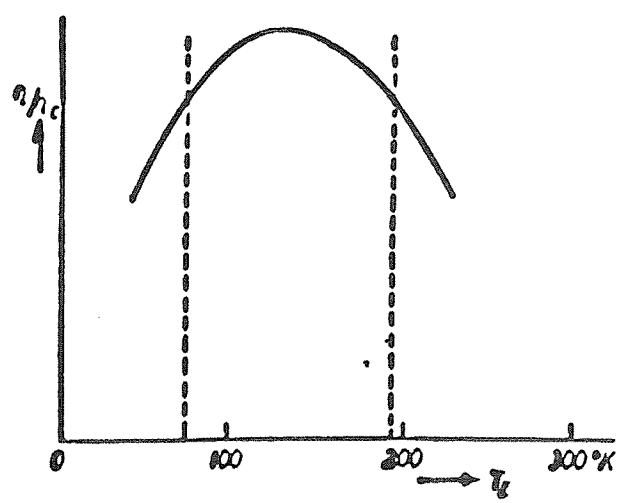

Figure 2

- **Design Philosophy**

STM's standpoint has always been to avoid complexity, which leads to expensive machinery and lowers reliability. Therefore, we were not looking for a means to isothermalize the compression and expansion space, which leads to complexity, but were able to find other ways to raise the COP considerably.

1. The adiabatic temperature fluctuation of the gas depends also on the properties of the gas, in this case $\frac{c_p}{c_v}$.

   In the isentropic pressure variation, the temperature variation is proportional to $p^{\frac{K-1}{K}}$ where $K = \frac{c_p}{c_v}$

   For helium, K = 1.68 at room temperature and atmospheric pressure, and for hydrogen, K = 1.40. That means, as an example, $T_{helium} = C.P^{0.40}$ and $T_{hydrogen} = C.P^{0.29}$ which means that the temperature fluctuation in helium is much higher than in hydrogen. This is the reason to choose hydrogen instead of helium.

2. The adiabatic losses are approximately proportional with the pressure ratio because the temperature fluctuation depends on the pressure ratio. Theoretically,

$$\frac{T_2}{T_1} = \left(\frac{P_2}{P_1}\right)^{\frac{K-1}{K}}$$

   which means if we make $\frac{P_2}{P_1}$ smaller, the temperature variation also becomes smaller.

   Of course the cold production decreases if we do that. To compensate for this decrease we raise the internal working pressure in order to get a satisfactory production. This is possible in our case because the drive is developed for a mean engine operating pressure of 12 MPa. For our cooling machine, even higher pressures are possible.

   With this basic philosophy we optimized the new heat exchangers, which are the key to the success of our cooling machine, with the limitation that the heat exchangers should fit on the short block of the STM4-120 engine.

For simplicity, our cooling machine will use our four cylinder all purpose drive mechanism. Only the heat exchangers will be different. The cooling capacity will be controlled very simply by means of the variable swash plate which controls the swept volume of the pistons.

- **Application**

Due to the cooling capacity of the machine that would best fit our all purpose short block, STM has determined that the most practical application for our cooling machine would be supermarket refrigeration.

- **Benefits**

Ecologically, Stirling cycle machines are famous for being environmentally friendly. Our cooling machine is no exception. Economically, there are several advantages.

1. Our all purpose short block is already being developed and is proving itself to be a simple, reliable, and efficient drive mechanism. When the engine goes into mass production any number of short blocks will be available at very low cost.

2. The cooling heads themselves are also simple and would be very inexpensive in mass production.

3. The cooling capacity of our machine is controlled by the variable swash plate. Just one of our machines would replace a whole bank of vapor compressors. Currently, several compressors have to be switched in and out to compensate for the varying demands on the supermarket refrigeration system.

4. Whatever chemical the existing refrigeration companies find to replace CFCs, it is difficult to imagine that it will be as efficient as CFCs. STM's intent is to develop a cooling machine that not only matches current CFC vapor compressor systems, but exceeds them in manufacturing cost and annual operation performance.

The performance characteristics of the vapor compressor and that of the STM4-120RF predicted by the STM/Philips simulation code, are entirely different. The performance curves are very steep for the vapor compressor system over a wide range of cooling temperatures, whereas those for the STM4-120RF are quite flat. The STM4-120RF is more efficient at deep freeze temperatures (-30° to -60° C), while the vapor compressor is hard to beat at higher food storage temperatures. Therefore, overall performance must be determined and compared on a yearly operational basis. For this reason, a study will be conducted this year in the Netherlands to determine the annual performance of both systems. Figure 3 shows the performance of the STM4-120RF compared with that of a modern vapor compressor unit of comparable cooling capacity.

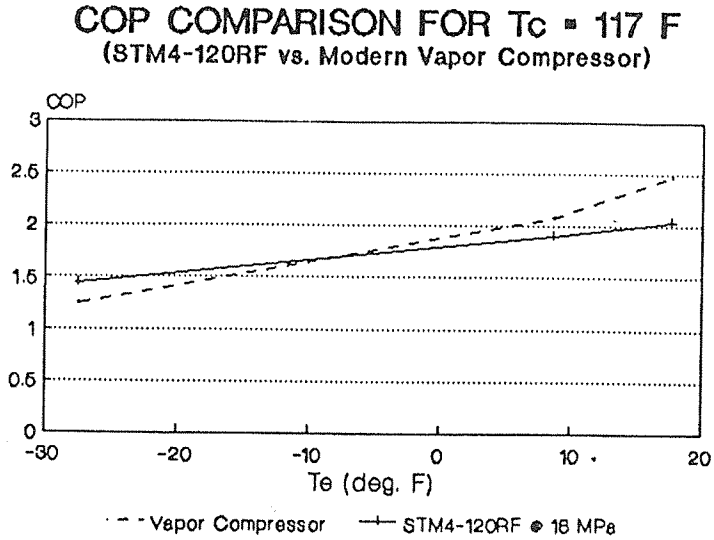

Figure 3

- **Technical Issues**

The success of the STM4-120RF rests almost entirely on the heat exchangers. They must be simple, highly efficient, inexpensive and compatible with the short block. STM is now developing and building such heat exchangers for the first prototype. In addition, the short block, although successful, is still being developed and improved. Obviously, more endurance and performance tests must be done and improvements made before the machine is ready for the market.

- **Economics**

It is anticipated, from experience, that the "first costs" of the system will be high. This is always the case with any prototype or R&D. Therefore, it is more practical to consider mass production costs. The first costs for prototypes are always high, but they are only one time costs and are insignificant compared with production costs. As for the short block, STM has a corporate agreement with DDC to develop the engine, so it will already be in mass production. The cooler heads are already inexpensive. The whole design is centered around being competitive with existing vapor compressor systems in mass production.

- **Technology Outlook**

STM expects to have the first prototype STM4-120RF on the test bed by the end of this summer. The second generation prototype will be made by the end of this year. Improvements will be made as experience is gained in endurance and performance tests. As testing is successful, more and more machines will be made each year until commercialization which should take place in 5 years. Projected market penetration is very difficult to determine, especially when some existing suppliers of supermarket refrigerators do not report their market share now.

- **Conclusion**

The cooling capacity of the Stirling refrigerator is nearly constant with different temperatures of the cold production. It is also nearly constant over a wide range of ambient temperatures. This is a significant advantage over the vapor compression cycle where this effect is considerable due to the fact that the cycle is based on two phases of the working medium. This means that the vapor-cycle compressor system needs different working media for different temperature regions.

A particular advantage of the STM4-120RF is that, with the piston stroke control the cooling capacity can be changed continuously over a wide range without adversely affecting the COP. In order to match the desirable load, several compressors of the vapor-cycle have to be switched in and out. See for instance, the Oak Ridge National Laboratory study, ORNL/Lab/80-61601/2 concerning Research and Development of Highly Energy Efficient Supermarket Refrigeration Systems, where it is proposed for a unit of 30 hp input, to use three different compressors consisting of 5 hp, 10 hp and 15 hp. This will improve the efficiency, but make the control complicated and the system more expensive.

Consequently, the development of the STM4-120RF will not only maintain the important characteristic of using a harmless working medium, but will also simplify any application considerably and, therefore, be more cost effective.

Acoustic Compressors

Tim Lucas
SONIC COMPRESSOR SYSTEMS, INC.

1. Technology Description

As the name implies, an acoustic compressor is in fact a compressor and does not comprise a thermodynamic cycle in and of itself. These compressors are being designed as drop-in replacements for the positive displacement (PD) compressors used in standard vapor-compression systems.

Like PD compressors, acoustic compressors create an internal pressure cycle which is converted into an external pressure lift and mass flow via a set of suction and discharge valves. However, the similarity to a PD compressor ends here.

Unlike PD compressors, which create their internal pressure cycle with a changing mechanical volume (i.e. pistons, rotaries, scrolls, etc.), the internal pressure cycle of an acoustic compressor is created by a resonant acoustic wave. As such, acoustic compressions take place within a constant volume chamber, thereby eliminating any frictionally moving parts that require lubrication.

The elementary theory of operation is explained by referring to the figure, which shows the conceptual features of an acoustic compressor. The top figure is a cross section of a hollow resonance tube (resonator), containing a gaseous refrigerant. The far left end of the resonator is terminated with a rigid metal flange. The far right end is terminated with a rigid metal valve plate having discharge and suction valve ports. The valve plate is backed by the discharge and suction plenums.

A linear motor is attached to the left end of the resonator. The armature coil is rigidly fixed to the resonator and the permanent magnet is resiliently connected to the resonator with a spring. When the armature is excited with an oscillating current, the magnet will be set into mechanical oscillation. The magnet's reaction forces are communicated through the spring to the resonator, thus causing the entire resonator to be mechanically oscillated along its cylindrical axis in response. This style of linear motor is a reaction-type shaker and is typically used for structural excitation in the field of vibration research. Such drivers have been developed by companies like Wilcoxon Research and BEI Motion Systems Company.

When the entire resonator is driven back and forth along its cylindrical axis, the two rigid metal end flanges move with the resonator thus acting as piston sound sources. If the resonator is driven at the frequency of one of its resonant acoustic modes, a standing wave will develop with the pressure waveform envelope shown. A frequency of 300 Hz is typical for a 27 cm long resonator filled with CFC-12 or HFC-134a. The resonator's mechanical displacement amplitude is only 50-100 microns peak.

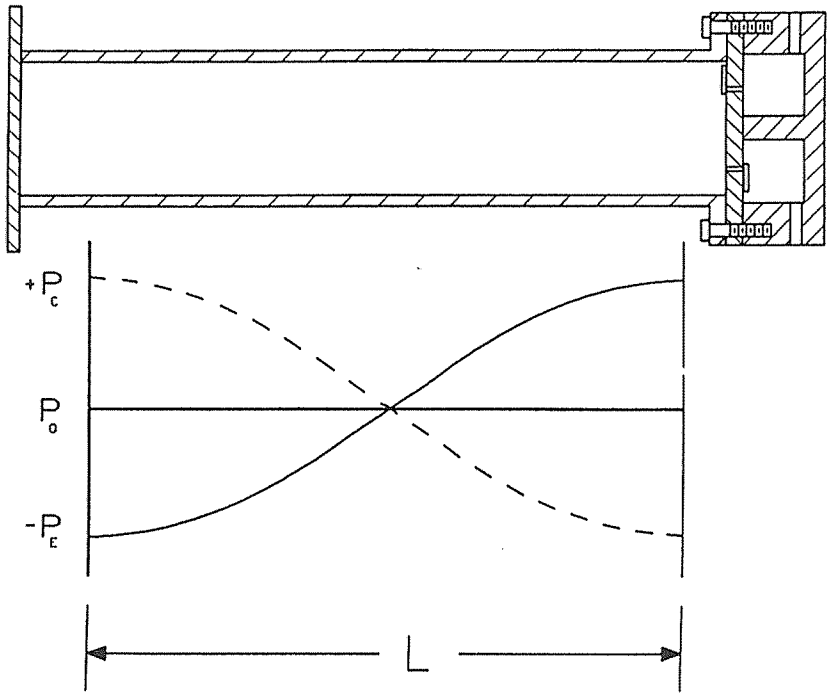
+Pc
Po
-PE
L

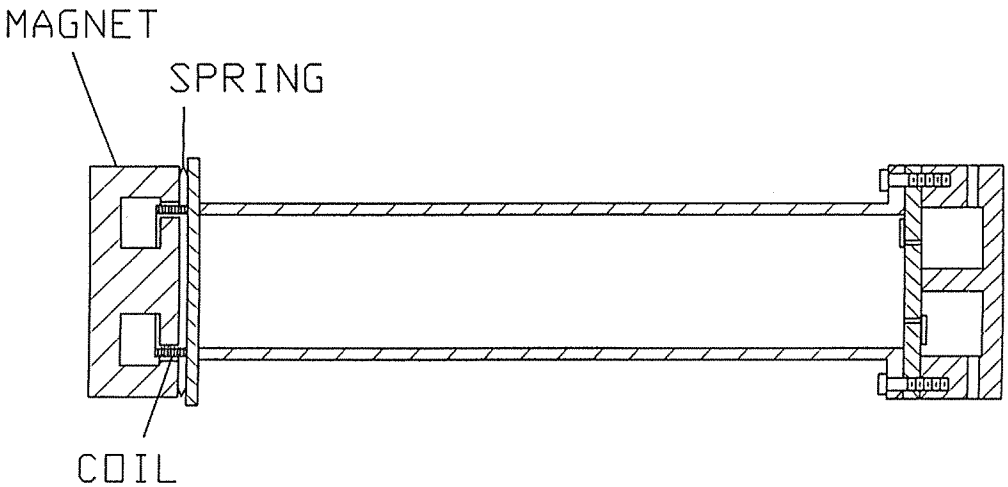
MAGNET
SPRING
COIL

The pressure waveform envelope shows the extremes of the pressure oscillation along the length of the resonator. During one acoustic cycle, the pressure at the end of the resonator oscillates between the condensing pressure P_C and the evaporator pressure P_E.

The suction and discharge valves respond to this acoustic pressure cycle in the same way they respond to the mechanically generated pressure cycle of a PD compressor. Thus, once the standing wave is established, a low pressure vapor will be drawn into the constant volume resonator, acoustically compressed and discharged.

If the spring constant of the driver is properly chosen, then the mechanical resonance of the magnet-resonator mass-spring system can be tuned to a frequency near the acoustic resonance of the resonator, thereby improving the electro-acoustic transduction efficiency.

Unlike the conceptual model shown in the figure, actual resonators do not have a cylindrical geometry. Historical attempts at building acoustic compressors have been unsuccessful, due to the nonlinear effects present in high amplitude acoustic waves. The most dramatic of these nonlinear effects is that of shock wave formation. Shock waves are undesirable, since they lead to excessive energy dissipation in the form of heat flow across the shock front. If not eliminated, shock waves will create severe limits on the acoustic pressures which can be achieved as well as on the energy efficiency of the compressor. For a simple cylindrical resonator, shocks will form at pressures of less than 1 psi.

Sonic Compressor Systems, Inc. has recently developed the core technology which now makes acoustic compressors possible. In its essence, this core technology is the ability to selectively control the wave shape of extremely high amplitude resonant acoustic waves. This control is provided through resonator geometries that cause the unwanted higher harmonics to be self-canceling. When present, these harmonics add to form shock waves. When the harmonics are canceled, shock waves are eliminated.

A recent acoustic compressor prototype has provided pressure lifts in excess of 200 psi and mass flow rates of 0.1-0.2 lbs/min. Prototypes are now being designed for testing at the standard check point (SCP) conditions used for U.S. home refrigerator compressors.

2. Applications

Acoustic compressors are first being optimized for home refrigerators, with other appliance applications such as room air conditioners and dehumidifiers to follow.

However, the technology will also be scaled up to larger capacity applications. In the future, Sonic Compressor Systems, Inc. will be working to adapt acoustic compressors for use in home central A/C, heat pumps, and light commercial applications.

3. Benefits

Oil-free operation
Acoustic compressors require no lubrication and thus can use any refrigerant without consideration of oil-refrigerant compatibility. Equally important, acoustic compressors can tolerate oil and particulate contaminants in the system if such environments are encountered.

Drop-in Replacements
Acoustic compressors are designed as drop-in replacements for current PD compressors, thus requiring little or no retooling and reinvestment for refrigerator OEMs.

New form factor
The shape of an acoustic compressor, could reduce the space typically occupied by a compressor. For home refrigerators, this could provide greater interior cabinet volume without increasing the refrigerator's external dimensions, thus compensating for volume losses due to thicker wall insulation.

Efficiency
Based on experimental and theoretical investigations, acoustic compressors optimized for U.S. home refrigerators could provide EERs of 7-8 at U.S. standard check point (SCP) conditions.

Thermodynamically, acoustic compressors provide a compression which is between isentropic and isothermal. This means that the indicated enthalpy of compression is characteristically lower than PD compressors of equivalent capacity.

In addition to EERs measured at SCP conditions, further kW-hr/yr reductions are expected from the inherent variable capacity offered by acoustic compressors.

Still further kW-hr/yr reductions are expected from the compressor's ability to vary its discharge pressure. If the condensing pressure drops, due to lower ambient temperatures, the compressor can lower its internal acoustic pressure to the minimum value required to maintain condensation. An acoustic compressor's internal energy losses decrease with the square of the compression ratio for constant capacity. Thus, when ambient temperatures drop below SCP conditions the compressors internal energy losses will decrease with the square of the compression ratio.

The first acoustic compressor prototypes are being instrumented for efficiency measurements, and data will be available in the near future.

4. Technical Issues

The first fully working prototypes are only months old. Technical feasibility has been established with regard to compressions and mass flow rates. However, acoustic compressors have not benefitted from decades of development and are just beginning their development life cycle. Characteristic of this early stage, improvements are taking place at a rate which quickly render performance data obsolete. The resulting intellectual property issues prevent detailed performance and design information from being discussed at this time. For now, technical issues can be dealt with only briefly.

The primary components of an acoustic compressor are the resonator, valves, driver and control circuit. Technical issues/problems are discussed on a component basis as follows.

Resonator

The resonator is the heart of an acoustic compressor. Within the resonator is the resonant acoustic wave which creates the acoustic compression cycle. The primary problem, which has prevented the prior development of acoustic compressors, is the extreme energy dissipation associated with nonlinear effects in high amplitude acoustic waves. If not eliminated, pressures are severely limited and acceptable energy efficiencies are unacceptable. The nonlinear effects of key concern are shock formation and turbulence.

As explained in section 1, the problem of shock formation has been solved with new resonator designs. Turbulence due to large acoustic velocities was also a concern. Today's resonator designs can provide the needed pressures without the high velocity penalty that leads to turbulence-related energy losses.

The energy efficiency of current resonator designs must be verified at SCP conditions. Preliminary work is underway to provide efficiency testing at these conditions.

Current resonators sizes, which run at 300 Hz, should be reduced for home refrigerator applications. When a resonator is downsized, its resonant frequency increases which requires the compressor valves to run faster. It must be shown that valves running at these higher speeds can provide the required efficiency.

The compressor's operation depends on mechanically oscillating the entire resonator. This creates noise levels which would be higher than current PD compressors unless noise attenuation schemes are integrated into the design. One approach would be to contain the compressor in a secondary vessel, like the hermetic vessels used for PD compressors. Other acoustically absorptive containments could be used. No work on noise control has been conducted to date. The noise generated by an acoustic compressor is a pure tone which is not a complex problem in noise control, and is not perceived as a significant problem by the appliance industry.

Valves
The problems anticipated with acoustic compressor valves are related to the very high speeds required. At speeds of 300 cps, pressure losses were expected to be unacceptable. Also, valve wear in an oil-free environment is a concern.

A current solution to the high speed pressure loss problem has been to exploit the inertial phasing of the resonator's motion to provide actuation of the valves.

As shown in the figure, the valves are positioned at the end of the resonator to take advantage of the inertial forces created by the resonator's vibration. The motion of the resonator is of exactly the right phase to open and close the valves in the proper suction and discharge sequence. This provides an actuation effect which allows valves to be operated at rates of 300-600 cycles per second, without the normal opening and closing delay losses previously associated with very high speed valves.

A glass fiber-reinforced plastic has been used as a valve material with satisfactory results for up to 20 hours, but thorough life tests have not yet been conducted. There are many engineering plastics with more robust properties which will also be tested.

Plastic valves also have the advantage of being very quiet compared to metal valves.

Drivers
The drivers, or linear motors, required are well understood and can provide electro-acoustic efficiencies of 90-95%. Initial driver-related life testing will look for constancy of the permanent magnet's field strength and the spring's dynamic properties.

Estimated driver cost, obtained from vendors, is appropriate for the desired overall compressor unit cost.

Controls
During operation, changing gas temperatures within the resonator can change the acoustic resonance frequency. Thus, a control is needed which will allow the driver frequency to remained locked to this changing acoustic resonance. Simple circuits, such as PLL chips, can provide this control.

Today's laboratory controls are being used to study the dynamic behavior of acoustic compressors as part of a vapor-compression system. Reducing these controls to a circuit card is not considered a problem by the industry.

5. Economics

Low Manufacturing Cost
An acoustic compressor's design is inherently simple and leads to lower manufacturing investment as well as potentially lower unit cost. Unlike (PD) compressors, which require high precision machining, the Sonic Compressor can be manufactured with very low-tech manufacturing methods such as forming and welding. As such, the unit cost is expected to be equal to or less than current (PD) compressors.

A group of appliance industry manufacturing engineers conducted a study of both manufacturing investment and unit cost. Three different manufacturing alternatives were studied, with each having a million unit yearly capacity. The three methods used were determined by the chosen materials: engineering plastics, steel, and aluminum. In each case machining/forming/welding, materials handling, transfers, assembly, painting, inventory, storage, shipping, quality control, and size of facility were considered. Remarkably, the entire facility cost was under $5 million in each of the three cases. In sharp contrast, the cost today of building a competitive rotary compressor plant is estimated at approximately $100 million, for the same capacity.

Developing Countries
Due to the low cost of entry, the technology can be very accessible to developing countries where first investment is a critical concern.

6. Technology Outlook

Acoustic compressors are currently in the research and development stage. The technology can provide compressions and mass flow rates appropriate for home refrigerators. Efficiency studies are now underway which will improve theoretical models and provide the data needed for adaptation and sizing of the compressor for home refrigerators.

Based on the current rate of R&D progress, it is estimated that the technology should be commercially available within 3-4.5 years. This short time frame can be attributed to the technology's current stage of development and its inherent simplicity, which is expected to abbreviate life testing. This simplicity may also reduce the time required for manufacturing process design, since simple methods such as forming can be used.

The anticipated time table is as follows:

1-1.5 years of further R&D and initial life testing

1-2 years of preproduction activities, including life testing

1 year of limited runs for field testing leading to initial production.

At this time, the potential for market penetration is excellent. Acceptance of the product is high and the product is widely sought out by manufacturers. The home refrigerator industry is currently involved in the compressor's development and is willing to manufacture upon satisfactory development.

Sonic Compressor Systems, Inc. is currently beginning negotiations with a U.S. appliance manufacturer. Market share is predicted to be high, again assuming satisfactory development of the compressor.

The technology's low market resistance can be attributed to its unique combination of solutions to the conflicting problems of energy efficiency and environmental compatibility now facing the industry. Acoustic compressors are currently perceived by the industry as the lowest cost path to solving these problems, with the least negative impact on existing refrigerator manufacturing investments.

Refrigeration and Air Conditioning Technology Workshop
Breckenridge Hilton, Breckenridge, CO
June 23-25, 1993

THERMOACOUSTIC REFRIGERATION

Steven L. Garrett, Thomas J. Hofler, and David K. Perkins
Physics Department and Space Systems Academic Group
Naval Postgraduate School, Monterey, CA 93943

1.0 TECHNOLOGY DESCRIPTION

1.1 Historical Perspective. The thermoacoustic heat pumping cycle is the youngest technology that will be presented at this workshop. Although the reverse process - the generation of sound by an imposed temperature gradient - had been observed for several centuries by glassblowers[1] and for decades by cryogenic researchers[2]; the recognition that useful amounts of heat could be pumped against a substantial temperature gradient with a coefficient-of-performance which is a significant fraction of the Carnot limit was only made ten years ago[3], with the first demonstration, including efficiency measurements, being made in 1986[4].

This discovery was made even more significant by the recognition that the thermoacoustic heat pumping cycle was intrinsically irreversible. Traditional heat engine cycles, such as the Carnot Cycle typically studied in elementary thermodynamics courses, assume that the individual steps in the cycle are reversible. In thermoacoustic engines, the irreversibility due to the imperfect (diffusive) thermal contact between the acoustically oscillating working fluid and a stationary second thermodynamic medium (the "stack") provides the required phasing. This "natural phasing"[4] has produced heat engines which require no moving parts other than the self-maintained oscillations of the working fluid.

During this relatively short period, several refrigerators and prime movers have been fabricated and tested at Los Alamos National Laboratories[3-5] and two refrigerators for spacecraft applications were built at the Naval Postgraduate School. The Space ThermoAcoustic Refrigerator[7] was flown on the Space Shuttle *Discovery* (STS-42) in January, 1992, and the ThermoAcoustic Life Sciences Refrigerator (TALSR)[8] is now being tested and should be characterized completely by October, 1993.

TALSR was designed to pump 700 Btu/hr in the refrigerator mode (+4°C) and 400 Btu/hr in the freezer mode (-22°C). This makes it the first thermoacoustic refrigerator which would be capable of operation as a conventional domestic food refrigerator/freezer. At the present time, there are several preliminary designs which should be capable of one-half ton to three tons of air conditioning capacity, but no prototypes are currently under construction.

1.2 A Simple Invisid Model of the Thermoacoustic Heat Pumping Process. Although a complete and detailed analysis of the thermoacoustic heat pumping process is well beyond the scope of this paper, the following simple, invisid, Lagrangian representation of the cycle contains the essence of the process. A complete analysis[6] would necessarily include the gas viscosity, finite wavelength effects, longitudinal thermal conduction along the stationary second thermodynamic medium and through the gas, and the ratio of the gas and solid dynamic heat capacities.

A schematic diagram of a simple, one-quarter wavelength thermoacoustic refrigerator is shown in Figure 1.

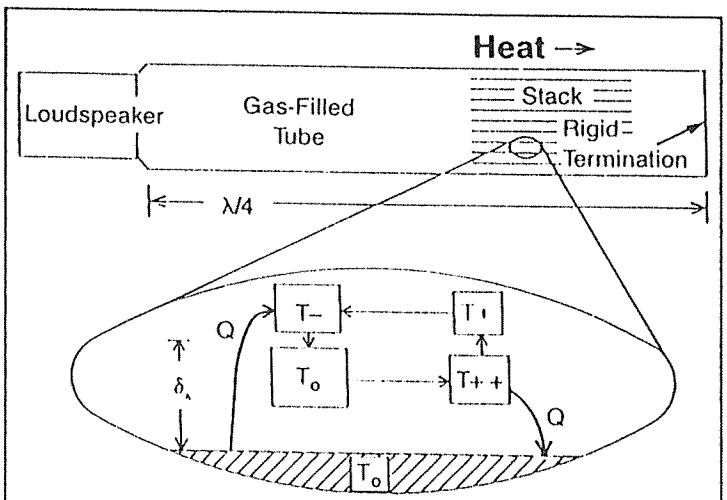

Figure 1. Schematic diagram of a one-quarter wavelength thermoacoustic refrigerator.

The thermal penetration depth, δ_κ, represents the distance over which heat will diffuse during a time which is on the order of an acoustic period, T = 1/f, where f is the acoustic frequency. It is defined[9] in terms of the thermal conductivity of the gas, κ, the gas density, ρ, and its isobaric specific heat (per unit mass), c_p.

$$\delta_\kappa = \sqrt{\frac{\kappa}{\pi f \rho c_p}} \tag{1}$$

This length scale is crucial to understanding the performance of the thermoacoustic cycle since the diffusive heat transport between the gas and the "stack" is only significant within this region. It is for that reason that the stack and the spacing between its plates are central to the thermoacoustic cycle.

For this analysis we will focus our attention on a small portion of a single plate surface within the "stack" and the adjacent gas which is undergoing acoustic oscillations. The distance from the solid stack material is small enough that a substantial amount of thermal conduction can take place in an amount of time which is on the order of the acoustic period. In the lower half of Figure 1, a small portion of the stack has been magnified and a parcel of gas undergoing an acoustic oscillation is shown. The four steps in the cycle are represented by the four boxes which are shown as moving in a rectangular path for clarity. In reality they simply oscillate back and forth. As the fluid oscillates back and forth along the plate, it undergoes changes in temperature due to the adiabatic compression and expansion resulting from the pressure variations which accompany the standing sound wave. The compressions and expansions of the gas which constitute the sound wave are adiabatic if they occur far from the surface of the plate. The relation between the change in gas pressure due to the sound wave, p_1, relative to the mean (ambient) pressure, p_m, and the adiabatic temperature change of the gas, T_1, due to the acoustic pressure change, relative to the mean absolute (Kelvin) temperature, T_m, is given below in equation (2).

$$\frac{T_1}{T_m} = \frac{\gamma - 1}{\gamma} \frac{p_1}{p_m} \tag{2}$$

Although the oscillations in an acoustic heat pump are sinusoidal functions of time, Figure 1 depicts the motion as articulated (a square wave) in order to simplify the explanation. The plate is assumed to have a mean temperature , T_m, and a temperature gradient, ∇T, referenced to the mean position, $x = 0$. The temperature of the plate at the left-most position of the gas parcels excursion is therefore $T_m - x_1\nabla T$, and at the right-most excursion is $T_m + x_1\nabla T$.

In the first step of this four-step cycle, the fluid is transported along the plate by a distance $2x_1$ and is heated by adiabatic compression from a temperature of $T_m - x_1\nabla T$ to $T_m - x_1\nabla T + 2T_1$. The adiabatic gas law provides the relationship between the change in gas pressure, p_1, and the associated change in temperature, T_1, as described in equation (2). Because we are considering a heat pump, work, in the form of sound, was done on the gas parcel hence it is now a temperature which is higher than that of the plate at its present location (*i.e.*, $|x_1\nabla T| < |T_1|$).

In the second step, the warmer gas parcel transfers an amount of heat, dQ_{hot}, to the plate by thermal conduction at constant pressure and its temperature decreases to that of the plate, $T_m + x_1\nabla T$. In the third step, the fluid is transported back along the plate to position $-x_1$ and is cooled by adiabatic expansion to a temperature $T_m + x_1\nabla T - 2T_1$. This temperature is lower than the original temperature at location $-x_1$, so in the fourth step the gas parcel adsorbs an amount of heat, dQ_{cold}, from the plate thereby raising its temperature back to its original value, $T_m - x_1\nabla T$.

The net effect of this process is that the system has completed a cycle which has returned it to its original state and an amount of heat, dQ_{cold}, has been transported up a temperature gradient by work done in the form of sound. It should be stressed again that no mechanical devices were used to provide the proper phasing between the mechanical motion and the thermal effects.

If we now consider the full length of the stack as shown in the upper portion of Figure 1, the overall heat pumping process is analogous to a "bucket brigade" in which each set of gas parcels picks up heat from its neighbor to the left at a lower temperature and hands off the heat to its neighbor to the right at a higher temperature. Heat exchangers are placed at the ends of the stack to absorb the useful heat load at the left-hand (cold) end of the stack and exhaust the heat plus work (enthalpy) at the right-hand (hot) end of the stack. The fact that the gas parcels actually move a distance which has typically been on the order of several millimeters means that intimate physical contact between the heat exchangers and the stack is not crucial.

2.0 APPLICATIONS

The applications of thermoacoustic engines fall into two categories which depend upon whether the refrigerator is powered by electricity or by heat. Although the heat driven thermoacoustic refrigerators and cryocoolers are attractive for applications where there is abundant heat or waste heat, at the present time, only two thermoacoustically driven refrigerators have been demonstrated. The first was a "beer cooler"[5,10] and the second was a thermoacoustically driven orifice-pulse-tube cryocooler designated the "Coolahoop"[11]. A more compact commercial version of the Coolahoop is now under development for cooling of high speed electronics. Several other heat-driven thermoacoustic refrigerators are currently in the design stages for the above applications including a refrigerator for storage of medical supplies and vaccines in Pakistan,* a solar driven refrigerated cargo container for transportation of tropical fruits, and a natural gas liquefaction plant.

Work on electrically powered thermoacoustic refrigeration has, until last year, been concentrated on laboratory experiments and spacecraft applications. At the present time, Ford Motor Company is developing thermoacoustic refrigerators for proprietary applications. NPS is currently developing two refrigerators. One is a third-generation, single-stage thermoacoustic cryocooler (TAR-3) which is designed to reach high-T_c superconductor transition temperatures. The other is TALSR, which is capable of producing cooling comparable to commercial domestic refrigerator/freezers. TALSR was also designed for use on-board the Space Shuttle[8]. The first commercial application of a TALSR-like design, which will use a less expensive driver, will be targeted to a "niche" market which we are unwilling to disclose at this time.

Due to the simplicity of its operation and the use of only one moving part, thermoacoustic refrigeration is also be suitable for cooling the latest generation of computer chips which can run at twice their room temperature design speeds when their temperature is reduced to -50°C.

*Should be Bangladesh.

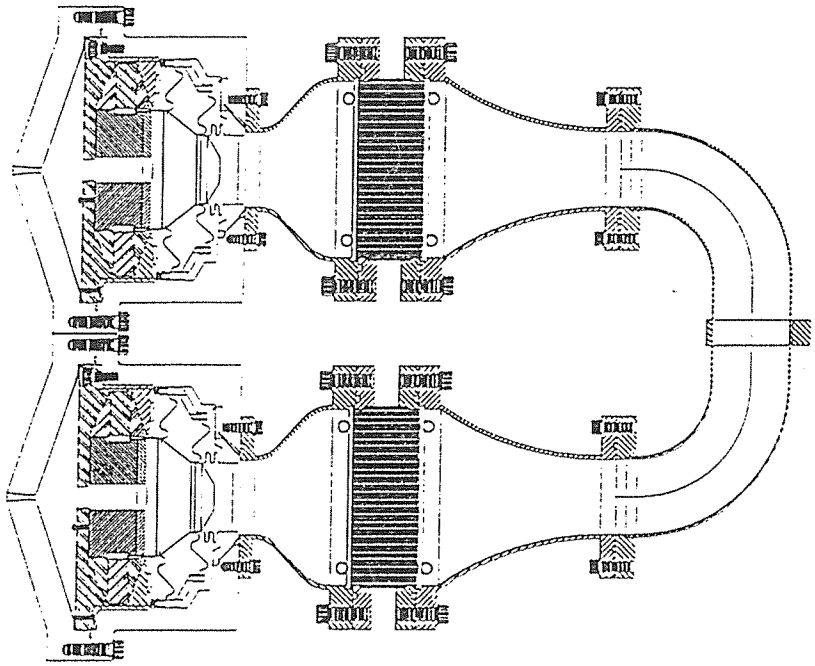

Figure 2. Cross-sectional diagram of the half-wavelength resonant TALSR. Two separate drivers are used for redundancy in space applications. A commercial unit would use a single double-acting drive. The two stacks and four fluid-filled heat exchangers are configured so that the total temperature span is greater than that of either individual stack.

3.0 BENEFITS

3.1 Inert working fluid. Helium, being an inert gas, cannot participate in chemical resactions and hence no toxicity, flammability, or negative environmental effects (ODP=GWP=0).

3.2 No sliding seals or lubrication. Due to the high frequency operation, high powers can be achieved with small displacements so no sliding seals or gas bearings are required. This also means that no "tight tolerance" machined parts are required thereby reducing manufacturing costs.

3.3 Very few simple components. Electrically driven systems require only one moving part and thermally driven systems have no moving parts. The "stack" can be fabricated from cheap plastics.

3.4 Large range of working temperatures. Depending upon the position and length of the stack in the acoustic standing wave field, one can trade off the temperature span and the heat pumping power. Different working fluids are therefore not required for different temperature ranges.

3.5 Intrinsically suited to proportional control. Just as one is able to control the volume of a stereo system, a electrically driven thermoacoustic refrigerator's cooling power is continuously variable. This allows improved overall efficiency by doing rapid cool-down at a lower COP and then maintaining heat leak losses at higher COP. This "load matching" can also reduce heat exchanger inefficiencies by minimizing temperature differences within the fluids and exchangers.

3.6 Immaturity. Thermoacoustics is the youngest of the heat engine cycles. It is more likely that important breakthroughs which substantially improve performance and manufacturability will still occur here rather than the older technologies which have already "skimmed the cream".

4.0 TECHNICAL ISSUES

4.1 Immaturity. Because thermoacoustics is the youngest of existing heat engine cycles, it lacks the infrastructure (suppliers, sales and service base, educational programs, etc.) which can enhance marketability. In addition, since there are presently no commercial products on the market, thermoacoustics does not have a "cash flow" which can be "tapped" to make either incremental component improvements or to finance general research and development efforts.

4.2 Efficiency. Although computer models[12] of TALSR predict that it will have a Coefficient-of-Performance Relative to Carnot (COPR) of 42% (exclusive of motor inefficiencies and secondary heat exchange fluid pumps), TALSR has not yet been tested. The previous thermoacoustic cryocooler designs have been optimized for temperature span rather than COP. Their best measured performance has given a COPR $\leq$ 20%, again exclusive of electroacoustic efficiency.

4.3 Power density. The simple boundary layer models of thermoacoustic engine performance[6,12] may not apply as acoustical amplitudes are increased. If acoustic mach numbers are restricted to $M_{ac} \leq 5\%$, then the realizable power density of conventional thermoacoustic stack geometries may be restricted to 10 Tons (35 kW) per square meter of stack cross-sectional area at working fluid pressures below 20 atm. Higher power research refrigerators and numerical hydrodynamic computer simulations would be very useful to determine what would ultimately limit the power density.

4.4 Electroacoustic conversion. Although electrical to acoustical conversion efficiencies on the order of 90% are, in principle, realizable at reasonable cost, present thermoacoustic drivers have had electroacoustic efficiencies under 50%. This should not be a problem since efficiencies for similar linear motor technology in Stirling applications as high as 93% have been measured[13].

4.5 Secondary heat transfer. All thermoacoustic engines produced thus far have used either conduction for small heat loads (<10 Watts) or electrically pumped heat exchange fluids for large heat loads (>100 Watts). Unlike the vapor compression (Rankine) cycles, the working fluid in a thermoacoustic refrigerator/chiller is not circulated outside the engine. In order to obtain maximum overall efficiency (*i.e.*, net COP), it is therefore necessary to simultaneously optimize primary and secondary heat exchanger geometry, transfer fluid thermophysical parameters, transfer fluid flow rates, and electrical pump or heat pipe performance, all subject to economic constraints, in order to achieve the best performance at the lowest cost.

4.6 The "talent bottleneck." Because thermoacoustics is a new science and requires expertise in a diverse number of non-traditional disciplines within the refrigeration and HVAC communities (acoustics, transduction, gas mixture thermophysics, PID, PLL and AGC control, etc.), there are very few experimentalists who are interested or capable of research in this field. This severely limits the number of potentially promising applications which can be pursued simultaneously.

5.0 ECONOMICS

All thermoacoustic engines which have been produced to date have been research prototypes. The costs have been typically 1-2 M$, which accounts primarily for scientific and technical staff salaries. No systematic cost projections or comparisons to existing system costs have been attempted. Limited commercialization attempts which address niche applications are expected over the next three years and should begin to provide some economic benchmarks which would lead to reliable cost estimates.

6.0 TECHNOLOGY OUTLOOK

Those of us who work with thermoacoustics feel the outlook is bright for the reasons enumerated in Section 3.0 of this paper. We recognize that our strongly positive outlook is both prejudicial and self-serving. On the other hand, the failure of technology outlook projections made by those who are not knowledgeable in thermoacoustics can be equally prejudicial, self-serving, and more importantly, wrong. This may be best illustrated by the recent analysis of "Energy Efficient Alternatives to Chlorofluorocarbons" prepared for the Department of Energy by A. D. Little, Inc. In that study[14], several domestic refrigeration technologies were ranked from 1 (Lowest) to 5 (Highest) based on the probability of success and assigned a 1-5 priority for R&D support.

In that A. D. Little analysis, Stirling Cycle was evaluated in the areas of analytical tools, linear drive systems, compact heat exchangers, reliability, and market potential of prototype designs. The sum of the scores for "probability of success" and "R&D priority" averaged 8.4 ± 0.6 out of a possible maximum sum of 10. The sum for thermoacoustics (improperly labeled Thermal Acoustic) was 2, with the minimum sum being 2! Of the other fourteen technologies evaluated in that table, none of the others had a sum lower than five.

The ultimate failure of that A. D. Little analysis can best be established by the "head-to-head" comparison that was sponsored by the Life Sciences Division of NASA. In an attempt to replace the existing Space Shuttle Life Sciences refrigerator/freezer, NASA awarded three contracts to companies with potential replacement technologies. One went to A. D. Little for a scroll pump/vapor compression technology. The other two contracts went to Sunpower, Inc., for a linear motor Stirling technology and to NPS for thermoacoustics. As of the date of this conference, less than a year after the award of the NPS contract, the A. D. Little team has dropped out and the Stirling system has been delivered with only one-third of the originally specified heat pumping capability. At this point, it appears that only the thermoacoustic technology will meet the original contract specifications.

When attempting to predict the future utility of a new discovery or emerging technology, it is always useful to recall the observations made by Prof. Faraday, D.C.L., F.R.S., in 1817[15]:

"Before leaving this subject, I will point out the history of this substance, as an answer to those who are in the habit of saying to every new fact, 'What is the use?' Dr. Franklin says to such, 'What is the use of an infant?' The answer of the experimentalist is, 'Endeavour to make it useful.'"

We know that reports that this infant was stillborn are wrong! We feel that thermoacoustics is still too immature to make definitive technological projections. The growth curves for both efficiency and heat pumping capacity are still very steep and the number of industrial and academic researchers, though still small, is growing at an increasing rate. (Thermoacoustic cooling demonstration units are now even starting to appear in high school science fairs!) At this point, the only outlook we can guarantee is that thermoacoustic systems will continue to prove that the initially pessimistic outlook of those unfamiliar with this technology were wrong.

7.0 REFERENCES

1. J. W. Strutt (Lord Rayleigh), *The Theory of Sound*, 2nd ed., Vol. II (Dover, 1945), §322j.
2. T. Yazaki, A. Tominaga, and Y. Narahara, "Experiments on Thermally Driven Acoustic Oscillations of Gaseous Helium," J. Low Temp. Phys, **41**, 45 (1980).
3. J. C. Wheatley, T. Hofler, G. W. Swift, and A. Migliori, "Experiments with an Intrinsically Irreversible Acoustic Heat Engine," Phys. Rev. Lett. **50**, 499 (1983); "An Intrinsically Irreversible Thermoacoustic Heat Engine," J. Acoust. Soc. Am. **74**, 153 (1983); "Acoustical Heat Pumping Engine," U.S. Patent No. 4,398,398 (Aug. 16, 1983); "Intrinsically Irreversible Heat Engine," U.S. Patent No. 4,489,553 (Dec. 25, 1984).
4. T. J. Hofler, "Thermoacoustic Refrigerator Design and Performance," Ph.D. dissertation, Physics Dept., Univ. Calif. San Diego (1986); "Concepts for Thermoacoustic Refrigeration and a Practical Device," Proc. 5th Int. Cryocooler Conf. 18-19 Aug 1988, Monterey, CA; "Acoustic Cooling Engine," U. S. Patent No. 4,722,201 (Feb. 2, 1988).
5. J. C. Wheatley and A. Cox, "Natural Engines," Phys. Today **38**, 50 (1985).
6. G. W. Swift, "Thermoacoustic Engines," J. Acoust. Soc. Am. **84**(4), 1145-1180 (1988).
7. S. L. Garrett, J. A. Adeff, and T. J. Hofler, ThermoAcoustic Refrigeration for Space Applications," J. Thermophysics and Heat Transfer (AIAA) 7(3), (1993).
8. S. Garrett, "ThermoAcoustic Life Sciences Refrigerator," NASA Tech. Report No. LS-10114, Johnson Space Center, Space and Life Sciences Directorate, Houston, TX (October 30, 1991).
9. L. D. Landau and E. M. Lifshitz, *Fluid Mechanics* (Pergamon Press, 1959), §52.
10. J. C. Wheatley, G. W. Swift, A. Migliori, and T. Hofler, "Heat-driven Acoustic Cooling Engine having no Moving Parts," U. S. Patent No. 4,858,441 (Aug. 22, 1989).
11. R. R. Jones, "High-Tech Elite," R&D Magazine **32**(10), 61 (1990).
12. W. Ward and G. W. Swift, "Design Environment for Linear ThermoAcoustic Engines", Los Alamos National Labs (October, 1992), preliminary release.
13. D. Berchowitz, Sunpower, Inc., at this conference.
14. A. D. Little, Inc., "Energy Efficient Alternatives to Chlorofluorocarbons," Revised Final Report-Ref. 66384 (US Dept. of Energy, ER-33, GTW), April, 1992, Table 2-2, pg. 2-8.
15. W. L. Bragg and R. Porter, *The Royal Institution Library of Science*, Physical Sciences-Vol 2, (Applied Science, Essex, England, 1970), pg. 65.

Magnetic Refrigeration

Dr. Anthony DeGregoria
Astronautics Corporation of America
5800 Cottage Grove Rd.
Madison, WI 53716

Technology description:

Magnetic refrigeration exploits the magneto-caloric effect, in which, certain magnetic materials adiabatically warm upon application of a magnetic field and cool upon removal of the magnetic field. There are many magnetic materials for which this process is highly reversible. One such material is Gadolinium (Gd) metal. Its maximum adiabatic temperature rise is about 2 degrees C per Tesla of applied magnetic field which occurs around room temperature (20 C).
For near room temperature applications, temperature spans of tens of degrees C are typically required. Large cryogenically cooled superconducting magnets can produce peak fields of approximately 7 Tesla. Regeneration is utilized to increase the temperature span to the desired value.

Figure 1 illustrates the preferred design for a large magnetic refrigerator. A wheel rotates continuously through a region which has a large magnetic field produced by superconducting magnet coils in persistent mode and a region where the magnetic field is essentially zero. The wheel contains magnetic material in the form of a porous heat transfer bed. Heat is transferred between the bed and a heat transfer fluid in the pore volume. Fluid flow occurs in the radial direction. In the high field region, a radially outward flow is produced by sliding seals on the inner and outer portion of the wheel. In the low field region, a radially inward flow is produced.

Following a small angular section of bed around a complete cycle, the segment enters the high field region where flow starts in the positive radial direction, and proceeds for approximately a third of the rotation period. It then leaves the flow region and demagnetizes with no-flow. Next the segment enters the region where flow is in the radially inward direction and the field is low. Finally it leaves the flow region and magnetizes with no-flow. In the radial flow direction, the outside of the bed is hot and the inside is cold.

The heat transfer fluid can either be a liquid such as water with antifreeze or a compressed gas such as helium at 20 atmospheres or more. It is circulated by a pump. Fluid leaves the hot heat exchanger at 300 K (27 C), the assumed hot temperature. It enters the hot end of the demagnetized

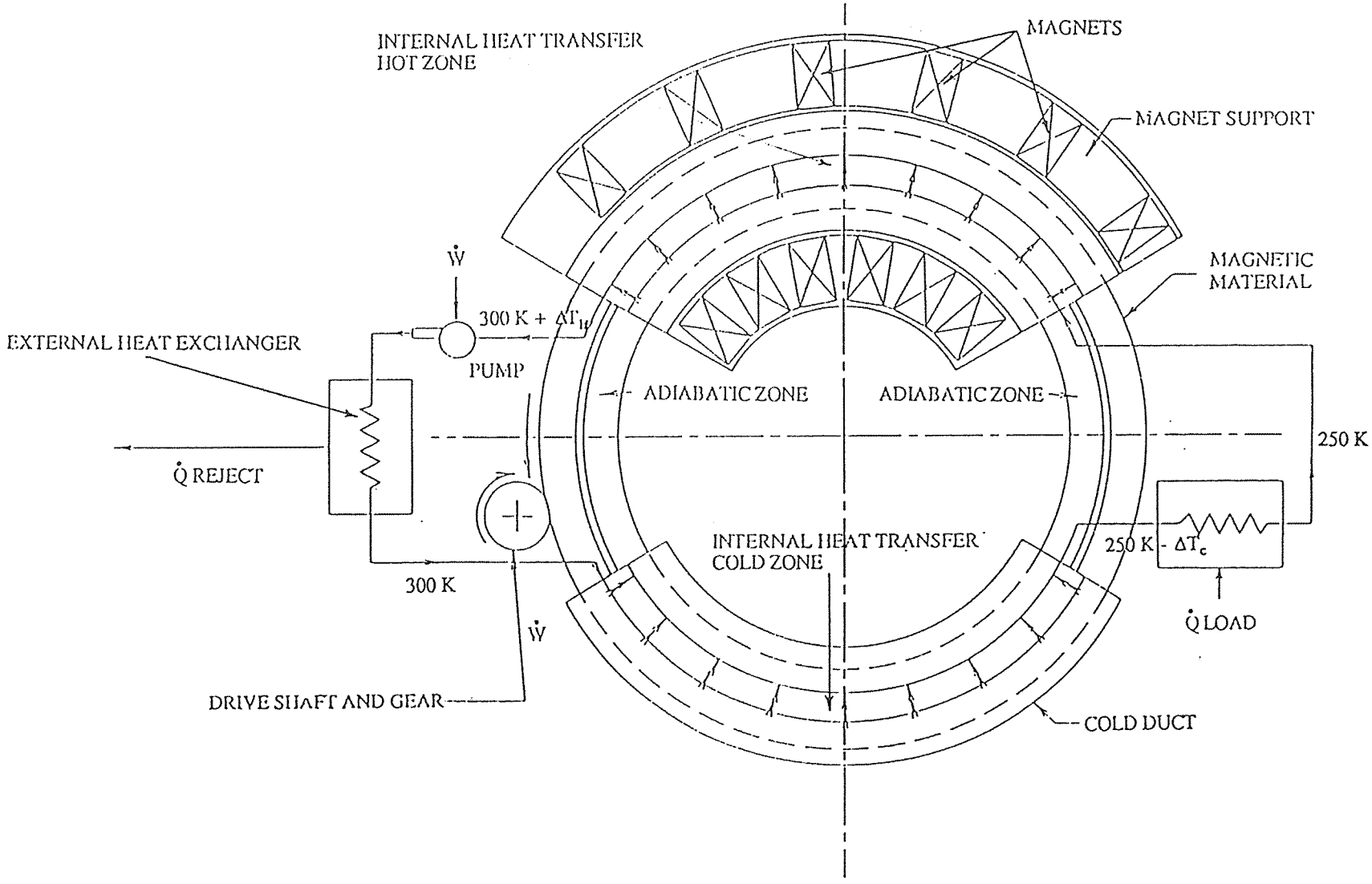

Fig. 1 A rotary active-magnetic-regenerative refrigerator which displays components common to all magnetic refrigerators.

bed and is cooled to below 250 K (-23 C). It enters the cold heat exchanger where heat is absorbed as the fluid is warmed to 250 K. The fluid then enters the cold side of the magnetized bed where it is warmed to above 300 K. The fluid then enters the hot heat exchanger where it rejects heat as it cools down to 300 K. (The cycle that the bed segment is going through is known as the AMR or Active Magnetic Regenerator cycle.)

Application:

The superconducting magnet is in persistent mode and it sees no time varying magnetic environment. It, therefore, requires no power supply to maintain the field. A cryogenic cooling system is needed, however. This limits the application of the technology to large scale refrigeration and air conditioning (hundreds of tons) since the power to the cryocooler can be from 1 to 5 KW. This is an estimate based on current technology. The development of high temperature superconducting magnets operating at 40 K rather than 4 K will reduce this parasitic load by more than an order of magnitude.

Benefits:

The main benefit of the technology is higher efficiency than the current vapor compression (VC) technology and, as a consequence, reduced operating cost. In a previous study (1), an analysis of a 50 KW magnetic refrigerator was presented. Table 1 lists the characteristics of the device.

Table 1: Characteristics of a 50 KW AMR Refrigerator

Power	50 KW
Efficiency (% Carnot)	50 %
COP	2.6
Temperature span	255 - 305 K
Wheel diameter	78 cm
Wheel speed	240 RPM
Bed length	3 cm
Bed height	3 cm
Porosity	0.1
Amount of Magnetic Material	18 kg
Field change	7.5 T

Spanning a temperature range of 305 K (32 C) to 255 K (-18 C), the device has a COP of 2.6. These are the temperatures of the fluid reentering the hot and cold end of the magnetic beds. The temperature of the fluid emerging from the beds is about 10 C higher or lower than those values. To produce the emerging fluid temperatures, a standard vapor compression refrigerator must span from 315 K to 245 K. The ideal COP for such a temperature span is 3.5. The vapor

compression refrigerator would have to have an efficiency of 74 % to break even with the magnetic refrigerator.

An additional benefit is that no harmful gases are required! If a liquid is employed as the heat transfer fluid, no gases are used except for helium, an inert gas, which is required in the cryogenic cooling system for the superconducting magnets.

The cycle is regenerative. In applications where the temperature range may vary due to changing conditions at the hot temperature end or the setting of the cold temperature, the device automatically responds, improving efficiency.

The device has 'glide' at both the hot and cold ends. That is, the temperature of the fluid emerging from the device is hotter or colder than the returning fluid at the hot or cold end, respectively. This temperature difference is often compatible with application requirements and serves to improve efficiency.

Technical issues:

It has been shown (2) that there exists an 'ideal' magnetic material for a balanced flow AMR. This material has an adiabatic temperature increase with the applied field which increases linearly with the absolute temperature. Gadolinium deviates significantly from this ideal. This means that efficiency will fall as the temperature span of the device increases. Any pure magnetic material will suffer from the same problem. As a consequence, research is required to make a blended material bed which will come close to the ideal behavior. The outlook for success appears high. There are many materials and material blends to choose from. A research effort spanning at least two or three years is required.

While Gadolinium is far from ideal for a balanced flow refrigerator, it is nearly ideal for an unbalanced flow device operating from about 300 K down. In such a device, more heat transfer fluid flows from hot to cold through the bed than in the opposite direction. The excess is diverted at the cold end of the device and passed through a heat exchanger which warms the fluid all the way to the hot temperature. The fluid then reenters the bed at the hot end. We are exploring potential applications of this unique device. In applications where a large fraction of the cooling power is used to cool a product from room temperature, efficiency improvements could be dramatic.

Additional technical issues are bed fabrication and bed corrosion. Gadolinium can be formed into sheets. Many other possible magnetic materials are brittle and cannot be worked into that form. Particle beds may only be practical

with these materials. Particle beds must utilize a liquid as the heat transfer fluid to reduce pressure drop. (Beds with laminar flow channels have at least an order of magnitude less pressure drop than one comprised of random particles.) The obvious choice for the liquid is a mixture of water and antifreeze, however, water corrodes Gadolinium. This corrosion problem must be addressed when selecting the medium to be used.

The last technical challenge is the cryogenic cooling system for the magnets. Improvements in cost and reliability will enhance market acceptance.

Economics:

In a previous study (3) we arrived at a retail cost of $55,000 for the first cost of a 50 KW magnetic supermarket freezer. Table 2 lists the cost breakdown. This is based on a conceptual design. No detailed drawing were made. The magnet wire and the magnetic material represents about 10 % of the total cost. A small cryogenic refrigerator, which may be employed to cool the magnets, is not included. Cryogen (liquid helium and liquid nitrogen) boiling is assumed for magnet cooling.

Table 2: Cost breakdown of a 50 KW supermarket freezer.

Component	Cost ($)
Magnet wire (Oxford Superconductor)	3,600
Magnet bobbin with HEX (ACA shop)	1,200
Magnet support structure (ACA shop)	400
Wheel housing (American Fabrication)	1,400
Split wheel (AC Equipment Services)	500
Adiabatic material (Engineering estimate)	1,200
Seals (Engineering estimate)	700
Bearings	200
General support structure (ACA shop)	500
Drive system (shaft, motor, seals, gears) (Engineering estimate)	500
Manifolds (Engineering estimate)	500
Sensors, control system (ACA suppliers)	1,000
Dewars (NBP LN_2, LHe, cryostat) (ACA shop)	2,000
Misc. piping, valves, flanges (Engineering estimate)	100
Magnetic Material ($100/kg)	1,500
Material Subtotal	15,300
Burden (100 %)	15,300
Labor, 800 hr, $10/hr	8,000
Burden (200%)	16,000
Recurring cost	**54,600**

A vapor compression refrigerator, comparable in size and temperature range, would cost a small fraction of the

magnetic refrigerator. The initial cost of these devices is a small fraction of the total life cost. Table 3 gives data from the previous study (2) with some updated numbers.

Table 3: Costs comparison - vapor compression vs magnetic refrigerator (50 KW) (costs in K$)

unit	first cost	operating cost	comments
VC	8.9	13.1	COP = 1.6
MR	55	10.7	uses LHe, LN_2
MR	60	8.9	1 KW cryocooler

Operating costs are annual and are based on 6000 hours annual operation at an electricity cost of $0.07/KWH. Liquid helium costs are $5/liter and nitrogen $0.08/liter. The assumed COP for the vapor compression refrigerator corresponds to an efficiency of 46 % of Carnot assuming 10 degrees C 'glide' on both the hot and cold end.

Technical outlook:

At present, the technology has been demonstrated near room-temperature (4) and in the cryogenic regime (5). We have recently made efficiency measurements in the cryogenic regime which are very promising (6). We have a program sponsored by the Department of Energy to build a magnetic refrigerator which produces 50 W of cooling at 40 K, rejecting heat to a 77 K liquid nitrogen bath. This program is in collaboration with researchers at Oak Ridge National Laboratory. The device is scheduled to operate in January 1994.

At present, we are seeking support from government and industry to develop the near room-temperature magnetic refrigerator further. With support, a full scale device could be operational in 5 to 10 years.

The market is large commercial or industrial air conditioners and freezers.

REFERENCES:

1. J.A. Waynert, A.J. DeGregoria, S.R. Jaeger, J.W. Johnson, and J.A. Barclay, report prepared by Astronautics Corp. of America for Argonne National Laboratory under DOE-ECUT/EPRI sponsorship (July 1988). "Assessment of the Impact of High Temperature Superconductors on Room Temperature Magnetic Heat Pumps/Refrigerators."

2. C.R. Cross, J.A. Barclay, A.J. DeGregoria, S.R. Jaeger, and J.W. Johnson, Adv. in Cryog. Eng., 33,767, Plenum Press, New York (1988). "Optimal Temperature Entropy Curves for Magnetic Refrigeration."

3. J.A. Waynert, A.J. DeGregoria, A.J. Foster, and J.A. Barclay, Argonne National Laboratory Report, No. ANL-89/23 (1989). "Evaluation of Industrial Magnetic Heat Pump/Refrigerator Concepts That Utilize Superconducting Magnets."

4. G. Green, J. Chafe, J. Stevens, J. Humphrey, Adv. in Cryog. Eng., 35, 1165, Plenum Press, New York (1990). "A Gadolinuim-Terbuim Active Regenerator."

5. A.J. DeGregoria, L.J. Feuling, J.F. Laatsch, J.R. Rowe, J.R. Trueblood, and A.A. Wang, Adv. in Cryog. Eng., 37B, 875, Plenum Press, NY (1992). "Test Results of an Active Magnetic Regenerative Refrigerator."

6. A.J. DeGregoria, A.A. Wang and J.F. Laatsch, "The Active Magnetic Regenerator - A High Efficiency Refrigerator", to be presented at the Cryog. Eng. Conf, Albuquerque, NM, July 12-16, 1993.

AN OVERVIEW OF EVAPORATIVE AIR CONDITIONING TECHNOLOGIES AND CONTRIBUTIONS TOWARDS REDUCING CFC AND ENERGY USAGE

Robert E. Foster
Southwest Technology Development Institute
New Mexico State University
Box 30001 / Dept 3 SOLAR
Las Cruces, NM 88003-0001 / USA
Tel: (505) 646-1846 / Fax: (505) 646-2960

1.0 TECHNOLOGY DESCRIPTION

Evaporative air conditioning is the most underutilized air conditioning technology available in the United States. Evaporative air conditioning is the cooling effect provided by the adiabatic evaporation of water. Two principle methods of evaporative air conditioning are commonly used: direct cooling, in which water evaporates directly into the airstream, thus reducing the air's dry-bulb temperature while humidifying the air, and indirect cooling, where primary air is cooled sensibly with a heat exchanger, while the secondary air carries away the heat energy from the primary air as generated vapor. Direct and indirect processes can be combined (indirect/direct). Compared to vapor compression systems, increased air flowrates are used for direct evaporative comfort cooling to compensate for higher supply air temperatures.

1.1 DIRECT EVAPORATIVE AIR CONDITIONING

Air is drawn through porous wetted pads or a spray, and its sensible heat energy evaporates some water, reducing the air's dry-bulb temperature. The temperature of the nearly saturated moist air approaches the ambient air's wet-bulb temperature. The air temperature is reduced by 60 to 95% of the wet-bulb depression (ambient dry-bulb temperature less wet-bulb temperature). Note that there is no sensible cooling and that this is essentially an isenthalpic process for direct evaporative air conditioning (also termed evaporative "cooling").

In arid regions direct coolers provide comfort cooling, while more humid areas can use direct cooling for specialized applications. Direct evaporative air conditioning consumes significantly less energy than vapor compression refrigeration. The only power consuming components of an evaporative cooler are fans and small water pumps. Energy savings of evaporative coolers vary with humidity levels and temperatures. Direct systems in low humidity zones typically realize an energy savings of 60 to 80% over refrigerated systems.

1.2 INDIRECT/DIRECT EVAPORATIVE AIR CONDITIONING

Indirect/direct (or two-stage) evaporative air conditioning cools primary air via a heat exchanger, while the secondary air carries away the heat energy from the primary air as generated vapor. The indirect stage is sensibly cooling the airstream.

Performance of an indirect/direct evaporative cooler is shown for ASHRAE 1% summer design conditions (dry-bulb/mean coincident wet-bulb) for various cities in Table 1. The psychrometric process is shown in Figure A. The cooler is assumed to have a 65% indirect and an 85% direct effectiveness and is representative of available commercial equipment (even greater effectiveness is achievable). An indirect cooler provides sensible cooling of the outside air, followed by an evaporative air conditioning effect from the direct cooler. In the Denver case, the representative indirect/direct evaporative cooler can deliver 54°F supply air for ASHRAE 1% design conditions (Foster, 1990).

TABLE 1
INDIRECT/DIRECT AND PRECOOLING PERFORMANCE

Location	1% Design [a] Condition	Indirect/Direct [b] Supply Air (°F)	% Precooling [c] Capacity Added
Albuquerque	96/61	54	14%
Chicago	94/75	73	5%
Dallas	102/75	72	7%
Denver	93/59	56	14%
El Paso	100/64	59	13%
Las Vegas	108/66	61	15%
Los Angeles	93/70	73	5%
New York City	92/74	72	7%

[a] All temperatures in °F, 1% Dry-bulb/Mean Coincident Wet-bulb design conditions. 1% design dry bulb condition and 5% design wet-bulb condition (ASHRAE, 1989).

[b] All cases assume an overall performance factor of 65% for the indirect process and a saturation effectiveness of 85% for the direct process; dry-bulb supply temperature °F.

[c] The overall performance factor of the precooler is 65%. 20% outside air was mixed with return air. Return air was 78/66°F and supply air was 55/52.5°F.

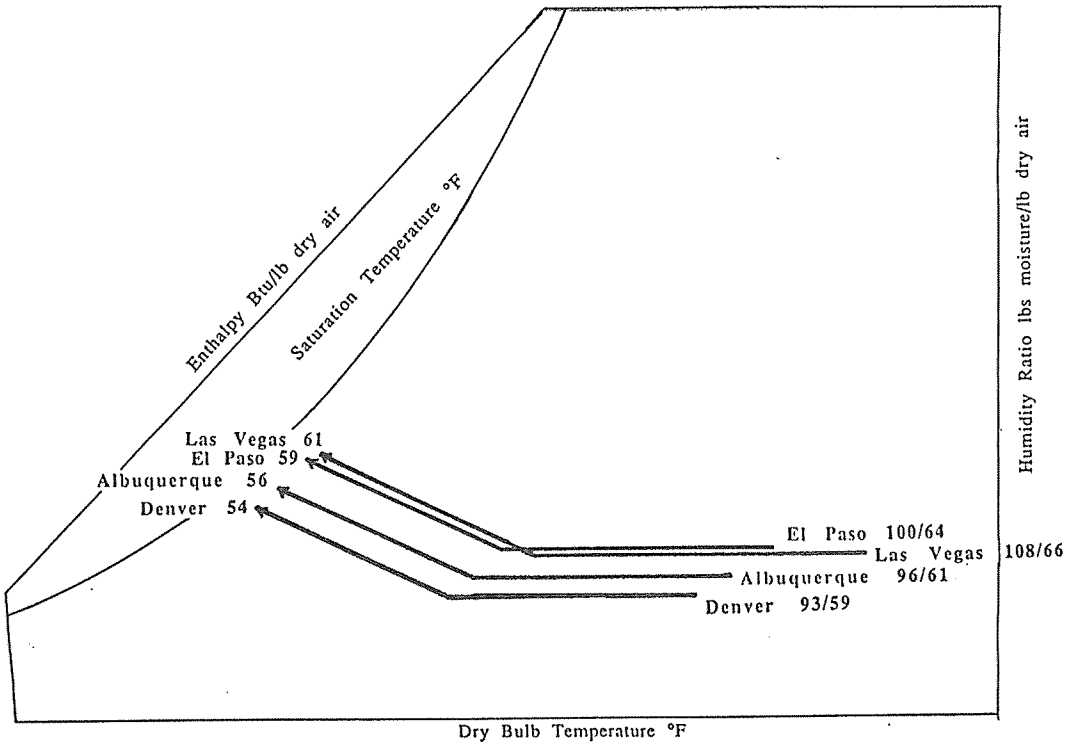

FIGURE A
INDIRECT/DIRECT EVAPORATIVE AIR CONDITIONING PROCESS

1.3 EVAPORATIVE PRECOOLING

Evaporative air conditioning can be used throughout the U.S. as a supplemental precooler to increase capacity for commercial buildings with refrigerated systems. Indirect coolers without a direct stage can precool all summer make-up air. Direct evaporative precoolers can be used on air-cooled condenser coils. Estimated cooling capacity added by use of an indirect precooler for 1% design conditions for various U.S. locations is shown in the last column of Table 1, and demonstrated in Figure B. A return air temperature of 78° and 66°F (78/66) dry and wet-bulb temperatures was assumed. The supply air was provided to the building at 55/52.5. The overall effectiveness of the indirect precooler and heat exchange process (performance factor) was assumed to be 65%. Areas with a relatively high wet-bulb temperature gain at least 5% capacity, and arid regions can gain 11 to 15% cooling capacity for these design conditions.

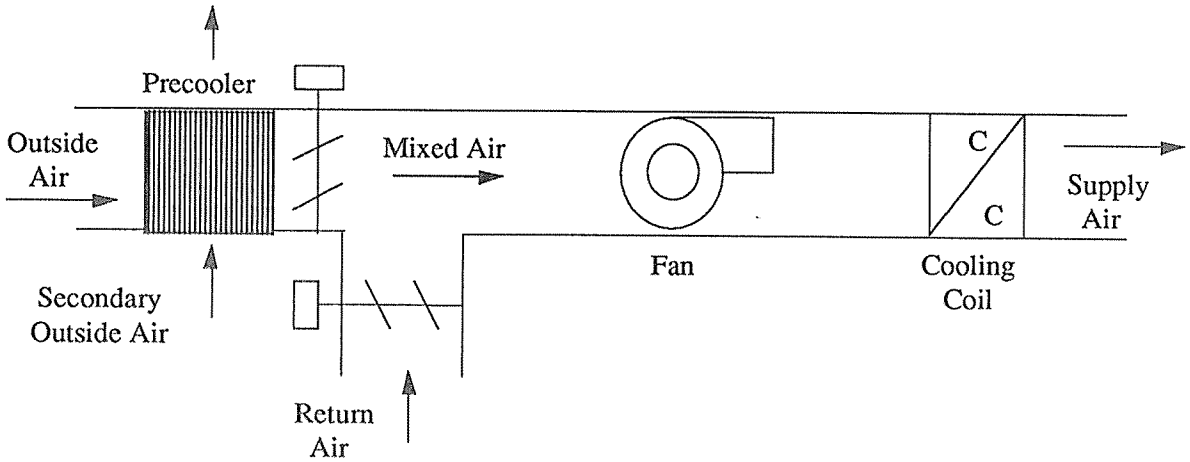

FIGURE B: INDIRECT EVAPORATIVE PRECOOLER

Indirect systems with refrigerative second stages can provide adequate comfort cooling in high humidity zones with an energy savings of 20 to 25% (Watt, 1987). The performance of refrigeration systems can also be enhanced by evaporatively precooling air used to cool condenser coils. The retrofit is simple and economical and both power savings and increased capacity for the cooling system are realized. An added advantage is that the direct precooler will reduce head pressures and thus extend compressor life. In a direct evaporative precooling process, panels of wetted medium are used mounted on condenser faces to precool all condenser air.

1.4 DESICCANT-ASSISTED EVAPORATIVE AIR CONDITIONING

A desiccant-assisted evaporative air conditioning system dehumidifies the ventilation air first with a desiccant to a desired state, and then employs evaporative air conditioning (either direct or indirect or a combination thereof) to cool the air to the desired supply temperature.

Processes developed use either liquid (eg. triethylene glycol) or solid (eg. silica gel) desiccants. The desiccant must be reactivated with a heat source such as natural gas, or non-polluting sources such as solar, geothermal, or waste heat. A desiccant combined with an evaporative cooler allows evaporative air conditioning to meet all comfort needs in even the most humid environments without use of any CFCs. Thermal COPs of 2.0 or higher, with an EER of 35 or better for electric parasitic power (fans, pumps, wheel motors) are possible for desiccant-assisted evaporative air conditioners (Penney, 1986).

2.0 APPLICATIONS

Direct evaporative air conditioning can provide comfort over approximately 40% of the United States land area, from southern California to central Texas, and Arizona through Montana. Indirect/direct evaporative air conditioning can provide comfort in an additional 40% of the country for central and eastern areas outside of the lower Mississippi Valley and humid coastal plains (Watt, 1986). Many buildings in the Southwestern United States use refrigerated air conditioning, which can be replaced with indirect/direct evaporative air conditioning systems for comfort cooling. One problem for retrofit situations is that existing building ducts may be inadequately sized for the increased airflow delivery used by indirect/direct evaporative coolers. Comfort cooling can be provided throughout the country with staged and hybrid evaporative air conditioning systems.

Evaporative air conditioning is useful in many commercial and industrial applications, such as schools, commercial greenhouses, buses, laundries, warehouses, factories, kitchens, poultry houses, and other similar situations. Relief cooling for greenhouses and industrial sites can be provided throughout the United States.

3.0 BENEFITS

Evaporative air conditioning does not use CFC refrigerants and only requires water. Its use in place of vapor compression systems eliminates CFC and other greenhouse gas emissions. Over 4 million residential evaporative coolers are in operation today in the Southwest, directly obviating the need for about 23.6 million pounds of HCFC-22; these residential coolers save approximately 11.8 million barrels of oil annually and 5.4 billion pounds of carbon dioxide emissions in lieu of using vapor-compression air-conditioning systems (Foster, 1992). Contributions from commercial and industrial applications of evaporative air conditioning are probably greater. Advantages of evaporative air conditioning technologies are as follows:

- Significant energy and cost savings
- No CFCs used
- Improved indoor air quality
- Life cycle cost effective
- Candidate for utility rebate when peak demand reduced
- Reduced CO_2 and power plant emissions to environment
- Easily integrated into built-up systems
- Wide variety of packages available
- Provide humidification when needed
- Easy to use with direct digital control (DDC)
- Decreased dependence on imported energy

4.0 TECHNICAL ISSUES

Evaporative air conditioning is a proven technology that has been used for many decades. The technology remained essentially unchanged for many years. The technology has progressed more in the past decade than in the previous decades with the advent of more advanced wetting media, controls, variable speed motors, and other recent innovations.

One of the greatest problems for the evaporative air conditioning industry to date is that there has been no single performance standard adopted for testing and rating equipment. Ratings for residential coolers have typically been provided by manufacturers in terms of normalized airflow delivery. However, the actual effectiveness of a cooler is not reflected with this approach. ASHRAE is developing a testing standard for direct and indirect evaporative coolers that should be adopted within the next couple of years. Once a test standard is adopted, engineers will be able to obtain reliable performance ratings of evaporative coolers and will be able to specify equipment with unbiased data.

As with any technology, evaporative air conditioning can continually be improved. There has been no federal support in promoting and advancing evaporative air conditioning technologies to date. Work is needed to further indirect and desiccant assisted systems. Many issues that need further study in evaporative air conditioning (EAC) are as follows:

- Quantify current EAC market and future market potential
- Quantify reduced CFC and energy consumption due to EAC
- Project future CFC obviation and energy savings
- Develop national testing standards for EAC
- Improve EAC system controls
- Develop more effective wetting media and components
- Develop low-cost heat exchangers (HXs) for indirect EAC systems
- Integrate winter heat recovery with indirect HXs
- Life cycle cost studies for EAC systems
- Research maintenance issues
- Develop EAC for vehicular applications
- Verify building simulation algorithms for EAC
- Conduct hybrid systems research and demonstrations
- Quantify health advantages of EAC systems

5.0 ECONOMICS

Evaporative air conditioning is an available commercial technology that is highly competitive in both capital and operating costs compared to vapor compression air conditioning. For instance, residential vapor compression system installed costs are about six times more than that for

evaporative air conditioning units. An installed residential evaporative air conditioning system, complete with ducting, has an initial cost of about $2,000 (EPEC, 1991). While ducts for evaporative air conditioning systems are larger than for vapor compression systems, the ducts for vapor compression systems are still more expensive since insulation is required. Insulation for evaporative air conditioning ducts is not critical due to the higher airflow rates and low energy usage of evaporative air conditioning systems.

Direct evaporative coolers in the Southwest typically require 70% less energy than conventional compressor driven systems in residences. For instance, in El Paso, Texas, the typical evaporative cooler consumes only 609 kWh per cooling season as compared to 3,901 kWh per season for a typical vapor compression air conditioner of SEER 10. This equates to an average demand of .51 kW based on 1,200 operating hours, as compared to an average demand of 3.25 kW for a vapor compression air conditioner. Thus, a vapor compression unit requires 2.74 kW or almost six times the electrical demand of the evaporative cooler (EPEC, 1991).

Depending on climate conditions, many buildings can use indirect/direct evaporative air conditioning systems to provide comfort cooling. Similarly, other western locations can satisfactorily obtain comfort cooling without refrigerated systems by using indirect/direct evaporative air conditioning. Indirect/direct systems realize a 40 to 50% energy savings in moderate humidity zones (Watt, 1986).

Energy savings from the installation of direct precoolers on air-cooled condensers are substantial. In the West, energy savings of over 20% are possible, while in the East, savings from 5 to 10% can be expected. Simple payback in the West typically is in two years or less for precoolers (Foster, 1990).

6.0 TECHNOLOGY OUTLOOK

Evaporative air conditioning is a commercially available technology that today is contributing worldwide towards diminishing the use of CFCs and reducing greenhouse gas emissions from power plants. Applications such as direct and indirect evaporative air conditioning, as well as direct and indirect precooling, are providing these contributions. Advances in desiccant technologies should further contribute to the growth of evaporative air conditioning technologies outside of traditionally arid zones.

Overall, the current direct evaporative air conditioning market is about $150 million per year in sales. There are over 4 million residences in the Southwest that use evaporative air conditioning. The potential market penetration of this technology, given advances with indirect and hybrid systems, is enormous. Indeed, evaporative air conditioning, coupled with

desiccant technologies, could displace the need for vapor compression air conditioning technologies for many applications in the coming century.

California has recently recognized the importance of the significant energy savings possible with evaporative air conditioning. The California Energy Commission adopted energy credits for evaporative air conditioning as part of their Title 24 code compliance program in January of 1993. These credits are having an immediate positive impact on industry growth.

Pacific Gas and Electric Company is currently evaluating residential two-stage evaporative air conditioning systems as an energy conservation tool to replace vapor compression air conditioners at the end of their service lives. Similarly, the Sacramento Municipal Utility District is evaluating evaporative air conditioning as a demand side management tool (Laybourn, 1993).

The State of New Mexico requires new public schools and additions to use evaporative air conditioning systems (mainly indirect-direct) instead of vapor compression systems. The State places about 100 new evaporative air conditioning applications per year on schools (Trujillo, 1993).

The Federal government has given no support to evaporative air conditioning research and development, and only limited support for desiccant technologies. Market penetration of evaporative conditioning technologies could be enhanced by forming government/industry/utility partnerships to further improve designs and methodologies. Federal programs should strongly support the existing industry. Through increased use of evaporative air conditioning technologies, the United States will realize increased benefits related to saving energy, reducing power plant emissions, obviating CFC usage, and improving building indoor air quality.

7.0 REFERENCES

ASHRAE Handbook, 1989 Fundamentals, Weather Data, Ch. 24, ASHRAE, Atlanta, GA, 1989.

El Paso Electric Company, "Life Cycle Cost Analyses: Evaporative Cooler vs. Refrigerated Air Conditioning, Volume I," El Paso, Texas, October, 1991.

Foster, R. E., G. McDonald and M. Heller Turietta, "Phaseout of Chlorofluorocarbon Refrigerants and Opportunities for Evaporative Cooling," Proceedings of the 1990 United States National Committee of The International Institute of Refrigeration (USNC/IIR) Purdue Refrigeration Conference/ASHRAE-Purdue CFC Conference, Purdue University, West Lafayette, Indiana, July 17-20, 1990, pp. 1-9.

Foster, R. E., "Evaporative Air Conditioning and Desiccant Air Conditioning: HVAC Technologies for the Future," Commercial Applications for Evaporative Cooling Systems Workshop Manual, Texas Governor's Energy Office, Texas Energy Extension Service, The Energy Center, The University of Texas at El Paso, El Paso, Texas, June 16, 1992, pp. 3-47.

Laybourn, David R., Pacific Gas & Electric Co., personal communication, May, 1993.

Penney, Terry R., "Advances in Open-Cycle Solid Desiccant Cooling," Desiccant Cooling and Dehumidification Opportunities for Buildings Workshop, Solar Energy Research Institute, Golden, Colorado, June 10-11, 1986.

Trujillo, Harold, State of New Mexico Energy, Minerals and Natural Resources Department, personal communication, May, 1993.

Watt, J.R., Evaporative Air Conditioning Handbook, second edition, Chapman & Hall, New York, 1986.

ORNL / DOE / AFEAS WORKSHOP
NOT-IN-KIND AND NEXT GENERATION TECHNOLOGIES
FOR REFRIGERATION AND AIR CONDITIONING APPLICATIONS

Evaporative Air Conditioning For Vehicular Applications

Prepared For:
Oak Ridge National Laboratory
P.O. Box 2008, MS-6070
Building 3147
Oak Ridge, TN 37831-6070

Prepared By:
Climatran Corporation
P.O. Box 3627
Englewood, Colorado 80014
(303) 696-6466

May 20, 1993

Evaporative Air Conditioning For Vehicular Applications

James F. Mattil
Climatran Corporation
P.O. Box 3627
Englewood, Colorado 80155-3627
(303) 696-6466

BACKGROUND: Climatran Corporation is the pioneer in developing and producing non-CFC, evaporative air conditioning (EAC) systems for transit buses. Between 1982 and 1984, the U.S. Department of Transportation funded the research and development of evaporative air conditioning systems for buses. In the final report on this two-year development project, the Denver Research Institute concluded that:

> ***"The use of a heavy duty, high efficiency evaporative air conditioning system designed and built for the demanding requirements of transit buses has proven to be a viable alternative to refrigerated air conditioning at about half the life cycle cost." - D.O.T.***

I. TECHNOLOGY DESCRIPTION: There are presently three distinct versions of evaporative air conditioning (EAC) technology:

1) direct evaporative cooling (DEC),
2) compound evaporative cooling (CEC),
3) desiccant-assisted evaporative cooling (DAEC).

In a *direct evaporative cooling* (DEC) system, air cooling occurs as water is evaporated into an air stream as the sensible heat of the air is converted to the latent heat of vaporization. The amount of cooling accomplished is proportionate to the amount of water evaporated.

Since cooling is proportionate to the amount of water evaporated, cooling is greatest when the air source is dry and can accept additional moisture. Conversely, cooling is decreases as the ambient air approaches saturation. Equivalent, or constant cooling capacity can be achieved in more humid areas by increasing the air volume delivered to the space and by increasing the air velocity, however there are practical limits to this solution.

Refrigerant a/c systems in many automotive applications use the same technique; the cooling effect is enhanced by increasing the air velocity. This is done by using small air discharge nozzles which can be directed at the passenger. This increases the perception of cooling, beyond that which is actually being achieved. Airplane nozzles accomplish the same effect. EAC systems can use the same approach to offset diminished cooling in more humid areas.

Compound evaporative cooling (CEC) systems are designed to produce cooler supply air temperatures in more humid climates, while adding less humidity to the air stream. This is done by placing a heat exchanger upstream of the DEC module. This heat exchanger produces sensible cooling of the primary air, as heat is transferred to the secondary air stream, which is cooled by direct evaporation.

Climatran has conducted tests of buses equipped with a two-stage, or CEC systems under a variety of climatic conditions. These tests have demonstrated that CEC units should be capable of maintaining interior comfort in climate conditions as adverse as those found in Washington, D.C. and Atlanta, Georgia (ASHRAE design conditions 95dbt/75wbt). CEC units differ from DEC units in that there is the heat exchanger and a fan to move the secondary air. Hence, they retain the energy and maintenance benefits of DEC equipment, but entail additional hardware cost.

Desiccant-assisted evaporative cooling (DAEC) systems are the final version of EAC technology. DEAC equipment is similar to the CEC system in that air is treated prior to entering the DEC module. In a DEAC system, moisture is actually removed in the first stage, which facilitates improved evaporation and cooling in the DEC module. In addition to the desiccant media and a secondary fan, the system must have a heat source and provisions to regenerate the desiccant material. DEAC equipment would have no geographic limitations, but would be larger, more complex and more expensive than either DEC or CEC equipment. However, DEAC units would consume significantly less energy than vapor compression equipment and would use no ozone-depleting chemicals.

The key, underlying idea of each version is to perform the most cooling work, using the least energy. This is done by optimizing the contribution of the DEC phase. Due to the differences in cost and advantages of each version of EAC system it is likely that each would find applications suited to its particular characteristics.

II. APPLICATION: This report will focus on comfort cooling applications of EAC technology to motor vehicles of different types. Some old timers may recall early forms of evaporative cooling devices used on cars in desert climates, but today's equipment bears no more resemblance to those devices than does the Wright brothers airplane to modern jets.

To date Climatran's development has been concentrated on transit bus applications, but we have studied additional applications including light rail, trucks, vans and passenger cars. One particularly interesting opportunity is the potential for use of EAC on electric and hybrid vehicles.

Data presented in this report has been obtained from transit applications and is useful because it is generally directly proportional to anticipated data for other applications. The relative differences between EAC and vapor compression would be similar for specific applications. The main difference from one application to another is related

directly to the cooling load, which in turn varies with the volume of the space, the glass area, internal heat sources and passenger load. It is easy to appreciate that transit applications represent a severe, possibly worst case, cooling environment. Since EAC equipment has been effective in such situations, it is reasonable to expect similar success in other uses.

III. BENEFITS: Evaporative air conditioning uses no CFCs, nor any other chemicals, thus eliminating any releases ozone-depleting chemicals. The total absence of CFCs, HFCs and HCFCs also eliminates any "direct" contribution to global warming. The cooling effect is achieved through the simple, natural process of water evaporation and there are no known, or anticipated environmental concerns. EAC systems require very little energy, typically about 85% less energy than comparable vapor compression systems. This substantially reduces carbon dioxide emissions and mitigates the "indirect" contribution to global warming. Naturally, the lower power requirement also reduces fuel consumption, providing a direct economic benefit to operators, while reducing the absolute quantities of ground-level pollutants.

A comparison of typical EAC equipment to typical vapor compression systems on a transit bus helps to quantify the energy advantages of EAC technology. A typical vapor compression unit will use a total of about 24 horsepower (3 hp for air distribution, while the compressor itself will operate over a range between 15 and 30 hp, with 21 hp being the accepted average). A DEC unit will use less than 2 hp, while a CEC unit uses about 3 total hp.

According to a report published by the U.S. Department of Transportation, "because evaporative systems are relatively simple, they are far easier and less costly to maintain". Actual operating experience on more than 400 buses has shown EAC systems to be far more reliable and has documented maintenance costs about 75% less than those for vapor compression equipment. The combined fuel and maintenance cost savings result in a much lower life cycle cost for EAC equipment. At current EAC equipment costs the life cycle costs are about 70% less than refrigerant systems.

IV. ECONOMICS: The first cost of any EAC system for buses can vary widely depending on the equipment specification. However, DEC systems are essentially equal in price to comparable vapor compression equipment, ranging from $5000-7000. Two-stage, or CEC systems will cost about 10-15% more than either DEC or vapor compression. Currently, a target cost for DAEC equipment is about 50-75% higher. None of the EAC equipment has yet achieved any scale economies.

Using data from the DOT report, EAC systems should result in maintenance cost savings of about $1000-$1500 per unit, per year. Fuel savings will vary depending on the length of the cooling season and the service day and will approximate one gallon per hour of operation. This would result in fuel savings ranging from about 400 gallons annually in Duluth to over 4000 gallons in Las Vegas, or Phoenix.

The maintenance cost estimates above, were prepared in the early 1980's. Today, with recycling requirements, higher refrigerant costs and a requirement to actually repair leaks, rather than the traditional "recharge-and-go" approach, actual maintenance cost are likely to be significantly higher, giving EAC systems even greater advantage.

Cooling for smaller vehicles requires smaller cooling units. The smaller refrigerant units generally require less maintenance than large bus units and maintenance cost advantage of EAC units may be less than on buses. Energy use is also less intensive and vehicle life cycles are shorter, which will reduce the magnitude, but not the relative proportion, of the fuel savings. Meanwhile, the first cost of DEC equipment for cars, trucks and vans is expected to be lower than the cost of vapor compression equipment, in some cases as much as 50% less.

V. TECHNICAL ISSUES: The technical issues and problems facing EAC technology are relatively modest, however companies active in this field lack the financial resources to address these issues.

The main limitation to EAC technology is the reliance on a suitable ambient conditions of temperature and humidity, which limits the areas of geographic application. As explained above, there are three general versions of equipment that address this issue - direct, compound and desiccant-assisted evaporative cooling systems.

The first step should be a formal evaluation and determination of the suitability of the various forms of EAC equipment (DEC, CEC, DAEC), for specific applications (bus, truck, car and train), under the full range of climatic design conditions. In this process, every attempt should be made to, first, maximize the performance of the least costly systems, since they would offer greater cost and energy advantages. Then, efforts should be directed to optimizing the performance of CEC equipment for the same reasons and finally, DAEC systems should be developed an advanced as necessary to meet any unfulfilled needs.

Climatran has accumulated extensive test results for DEC systems on buses and has conducted a test and evaluation of CEC systems seeking to document cooling performance under adverse climate conditions. In the course of this work, the company has identified several unique measures to enhance cooling performance. The company believes that significant improvements are possible that could further extend the areas of feasibility for EAC technology, given the modest resources and cooperation needed for such an effort.

A key step toward extending EAC geographic applicability, at the least cost, would be development of low-cost, high-efficiency, indirect-stage heat exchangers for use in CEC systems.

There are other technical issues of a minor nature such as water containment in a moving vehicle, equipment integration into the vehicle and aesthetics, However, these have already been addressed in transit applications and can certainly be resolved in other automotive uses, given cooperation from vehicle manufacturers and government. For truck, van and R.V. uses, the only problem is the need for funding to develop adequate production molds for equipment cabinetry and water tanks.

Perhaps the greatest challenge, however, is to achieve the scale economies that would permit competition on an equal level.

VI. TECHNOLOGY OUTLOOK: Evaporative air conditioning can play a significant role in eliminating ozone-depleting chemicals and mitigating global warming. Since many applications of EAC technology are already commercially available, or feasible, such contributions could be immediate and could also provide meaningful cost savings.

Although DEC systems are commercially available, unless governments act to support and encourage EAC technology it is unlikely that it will achieve the level of market success justified by its numerous benefits, even in niche markets, where it already enjoys substantial environmental and economic advantages. There are several reasons for this pessimistic assessment.

1.) *Competition.* Today, total EAC industry sales are probably around $100 million and profitability is low due to direct competition for a small total market. Meanwhile, the companies in the vapor compression industry include names like Westinghouse, United Technology, Carrier, Nippondenso, York, Trane, Fedders, Rheem, Thermo King and many other huge firms. EAC companies are simply unable to summon the resources to develop, advertise and promote their technology.

2.) *Resistance to Change.* It is difficult to appreciate the power of tradition and inertia, especially when coupled with the power and influence of large companies, that continue to promote and foster myths about a/c performance. Many decision-makers lack the technical understanding to appropriately compare the merits of refrigerant and evaporative systems and thus rely on tradition as the over-riding basis for there decisions.

3.) *Lack of Exposure and Promotion.* In the 1970's solar energy became a household word, even though the technology has never achieved the competitive economic advantage that evaporative air conditioning enjoys today. Yet people know about solar, while they remain ignorant about EAC technology. Small EAC firms have lacked the resources to promote their technology, while government has lacked the interest and willingness to help.

4.) *Credibility.* EAC products lack the credibility of competitive vapor compression equipment, because the government has done virtually no testing,

evaluation, certification or promotion. Meanwhile, the large refrigerant competitors have undermined EAC technology as part of the competitive process. So, when Arthur D. Little says EAC isn't feasible for electric vehicles, and Climatran says it is feasible, what is the result?

5.) *No Allies.* Alternative fuels development programs have attracted considerable attention and major government funding because there are major businesses who stand to profit, from oil & gas companies to farmers, to aluminium producers. Meanwhile, chemical substitutes to CFCs have enjoyed similar support, because the chemical firms are pushing these solutions. The huge and highly profitable chemical industry has received more than 100 times more government funding help than has the cash-starved, EAC industry. Evaporative air conditioning has no influential allies because the technology is simple and fuel efficient. Since there are no major beneficiaries there is no push for action and the results have been predictable.

It is our sincere hope that the U.S. Department of Energy will recognize the potential cost-effective contribution that evaporative air conditioning technology can make to reducing ozone depletion and global warming, by eliminating CFC's and cutting energy consumption. And since the technology is already feasible, commercial and faces few technical barriers to market expansion, it is hoped that the government will recognize this opportunity to advance an environmentally-safe technology with worldwide applications and business prospects.

American companies are in a unique position to maintain a world leadership in developing and expanding EAC technology business, especially in developing nations where energy is less available and energy costs much higher, yet without government help and encouragement U.S. firms will fail to capitalize on these worldwide opportunities.

TECHNOLOGY GROWTH OF

FLUOROCARBON VAPOR COMPRESSION SYSTEMS

by

Paul Glamm

Engineering Manager
Thermal Systems Technology

The Trane Company
LaCrosse, Wisconsin

June, 1993

Presented at Breckenridge, Colorado for the

ORNL Workshop on Global Warming Impacts of Alternate Technologies

BACKGROUND

ORNL (Oak Ridge National Laboratory) published "Energy and Global Warming Impacts of CFC Alternative Technologies" in December, 1991 under sponsorship from DOE and AFEAS (Alternative Fluorocarbons Environmental Acceptability Study). ARI (Air Conditioning and Refrigeration Institute) member companies provided information through ARI to ORNL which supported the calculation of TEWI (Total Equivalent Warming Impact) for a variety of refrigerant and vapor compression hardware combinations as a function of product cost and efficiency. The results of the TEWI analysis for air conditioning equipment showed the indirect contribution to global warming via carbon dioxide generation is much larger than the direct GWP (Global Warming Potential) of the refrigerant chemicals themselves.

More recently, ARI has agreed to provide efficiency versus cost data for a wide variety of air conditioning products to ASHRAE SSPC90.1, with the data being used to justify proposed minimum efficiency levels. Other organizations expressing interest in these data include DOE, Lawrence Berkeley Laboratories, and the Canadian Bureau of Energy and Mines. Although ARI members have agreed to supply cost/performance data that meets the needs of ASHRAE SSPC90.1, care should be taken in using the data for longer range comparisons. The relatively narrow range of efficiency levels being examined by ASHRAE SSPC90.1 can be modeled with relatively simple changes to heat exchanger size and effectiveness, and for the most part ignores fundamental improvements in fan, compressor and cycle efficiencies.

But, if we examine the historical trends in efficiency levels, the impact of technology growth on efficiency and cost levels is apparent.

EFFICIENCY GROWTH

Consider the following examples which demonstrate the impact of changing technology on product efficiency.

Example 1. The efficiency data for Trane's centrifugal chiller sales (300 tons typical size) have been extracted for the last 20 years and plotted in kW/ton versus year as shown in Figure 1. The kW/ton data are typical numbers, not extremes, with the exception of the last two R-123 data points for 1993, which shows both the typical and minimum offered kW/ton values. The efficiency improvement from 1975 to 1980 stemmed from the 1974 oil embargo/electric price increase and was accomplished with improved compressor performance, more effective heat exchangers and a multimillion dollar investment. The 1990 data point for R-123 shows the poor results obtained by dropping R-123 into an R-11 chiller without modification. The subsequent improvements in efficiency for the typical chiller through 1993 resulted from compressor optimization for R-123 with relatively small impact on product cost. The 1993 data for the "best" efficiency was accomplished by adding heat exchanger surface at considerable expense to both Trane and our customers.

Pushing beyond 0.55 kW/ton toward the practical limit (95% motor, 83% impeller adiabatic efficiency, 3 stages, 2 economizers, 3F total approach) by simply adding more heat exchanger surface will be expensive, thus prodding us to investigate compressor and cycle improvements for which simple cost/efficiency estimates are

tenuous at best. So, what's the point? Product cost versus efficiency has proven to be a very complex function over the years, and may be poorly represented by simple estimates of efficiency versus heat exchanger size.

Example 2. Another excellent example of the impact of technology growth on product performance is the rise in SEER levels for residential air conditioning products. SEER levels for residential air conditioning equipment are plotted versus year in Figure 2. The SEER data represent the high end of the product line rather than typical, as the high end results from market drivers and not regulated minimums. As with centrifugal chillers, the efficiency growth of residential air conditioners has resulted from both technology improvements and heat exchanger size increases. The technology improvements include:

- compressor efficiency upgrades with more efficient motors, lower parasitic pressure drops, and lower running gear losses (Note: These improvements have only been accomplished with 100's of million dollars in investment.), and

- more effective heat transfer surfaces on both refrigerant and air side as evidenced by the dramatic rise in the use of internally finned tube and slit fins.

- Variable speed compressors and fans became cost competitive as the SEER's were pushed past 14.

- At the same time, market forces have pushed the industry to implement lower cost methods of doing business, from the front office to the manufacturing floor. Improvements in development and factory cycle times have significantly reduced our cost of doing business.

- 1993 will see single speed efficiencies of 15 and variable speed efficiencies of 18. The practical limit shown in Figure 2 is for a single speed product with compressor adiabatic efficiency of 80%, motor efficiency of 92%, 50F saturated suction, 70F return gas, 100F saturated condensing, and 85F liquid temperature, and total fan power of 300 watts.

If we had calculated cost/performance data in 1980 for air conditioning products, could we have anticipated the improvements in both technology and business costs? Possibly, but probably not very accurately. Any comparison of alternate technologies to **future** cost/performance of vapor compression products is difficult at best.

WHERE DO WE GO FROM HERE?

The air conditioning industry is very interested in alternate cycles, as we continually look for a technology which may obsolete fluorocarbon vapor compression products. Although some alternate cycles appear very promising, they seem to have stayed about 10 years from commercial viability over several decades, with the exception of absorption and desiccant systems. Part of the challenge for proponents of alternate cycles is trying to compete against a moving target, as we continue improving the efficiency and cost effectiveness of our current vapor compression products through the use of new technology. Examples of new or developing technologies include the following:

- Residential air conditioners typically use prop fans in condensing units and FC (forward curved blades) fans in the indoor air handlers. Although these are cost effective today, pushing SEER's toward practical efficiency limits may justify the use of more expensive vane axial and air foil fans instead. Simple calculations suggest we can raise the efficiency of a single speed air conditioner from 15 to 16 SEER through the use of more efficient and more expensive fans.

- Water cooled chiller efficiencies are being pushed toward practical limits with current refrigerant cycles, so longer term the use of zeotropic blends in place of single compound refrigerants such as R22, R123 and R134a may prove cost effective. The theoretical efficiency limit for a 30/10/60% blend of R32/125/134a is about 20% better than for R22, assuming perfect counterflow and good glide matching with the water side. Practical design limitations due to manufacturing, service and marketing constraints may limit the use of zeotropic blends, but the technical challenges are being tackled due to the impending loss of R22 and the calculated efficiency carrot.

- Variable speed technology is becoming more widely used as the demand for higher efficiency levels increases. Expect to see this technology applied to a wider array of products as the market demands higher efficiency and tighter capacity control.

- Scroll and screw compressor designs offer the industry both reliability and efficiency improvements.

- Passive composition shifting with zeotropic blends can be a problem, but controlled composition shifting may let us optimize the performance of a heat pump as the ambient temperatures change and the climate turns from heating to cooling mode. This is an old idea, but still an interesting one.

- Heat exchangers with smaller refrigerant side volume are being developed which dramatically reduce the mass of refrigerant in the product. Implementation of these heat exchangers should further reduce the impact of direct GWP on TEWI.

- Devices which recover some of the lost work of the refrigerant expansion process are being pursued at a variety of locations. Examples of these devices include two phase ejectors and scroll/screw expanders. The carrot is about 5% in cycle efficiency.

CONCLUSIONS AND RECOMMENDATIONS

Conclusions from this discussion include the following:

- The trends in cost/performance ratios of vapor compression products have been strongly influenced by improvements in technology and reductions in the cost of doing business. Simple engineering models cannot forecast these long term trends with any accuracy. Technology changes generally require large sums of money for development and implementation costs.

- Vapor compression systems have not reached their thermodynamic limits in performance, and a wide array of feasible concepts for improving their performance are being investigated. This technology is not standing still!

Thus leading to the recommendation that careful thought should be given to the methods of comparing the different cooling technologies with an efficiency/global warming perspective, especially if you attempt to compare the technologies at similar cost levels. This analysis should be repeated as often as necessary so the effects of unanticipated technology improvements and practical limitations are factored into the results.

Figure 1. Centrifugal Chiller Efficiency Growth

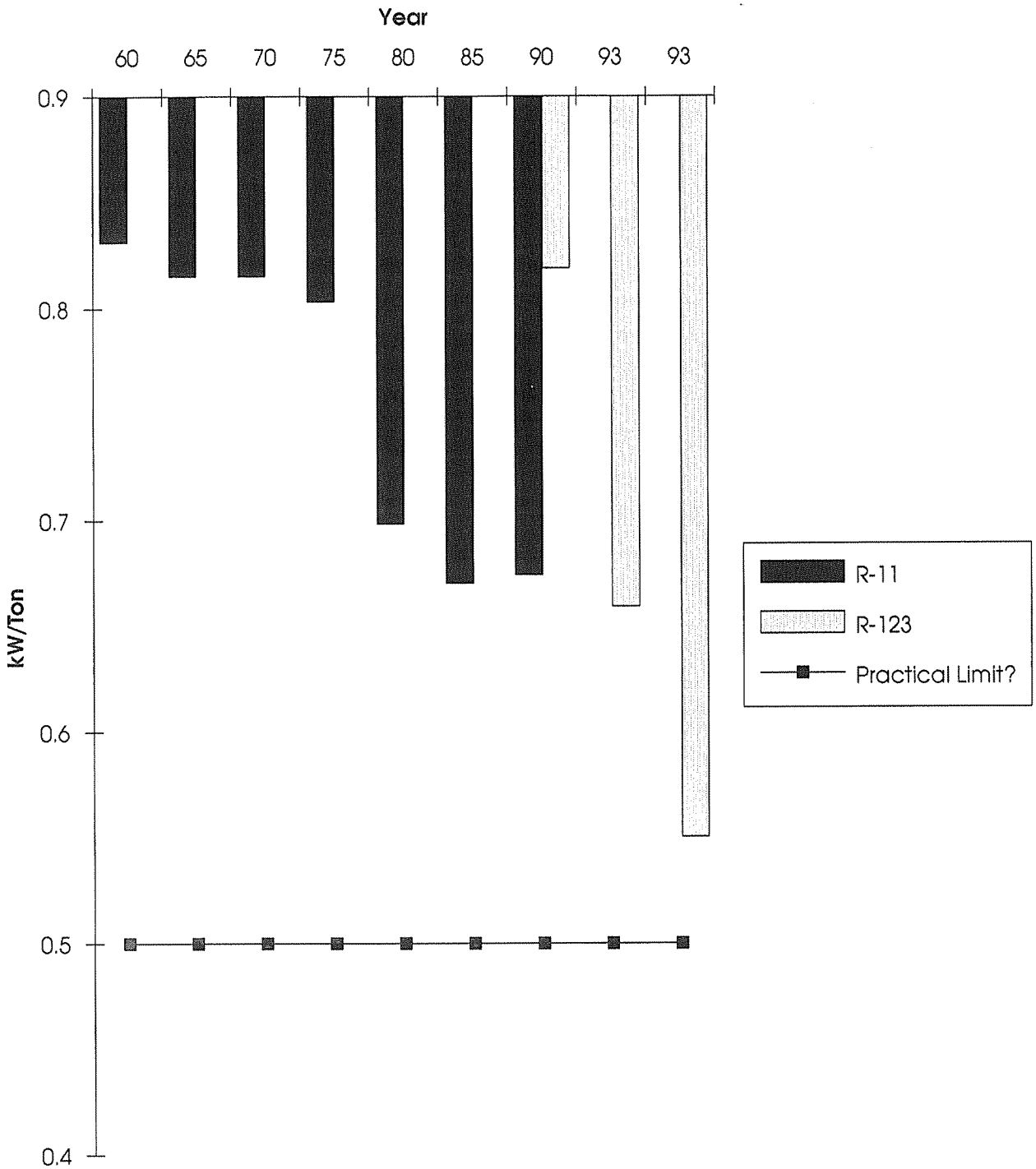

Figure 2. Air Conditioner Efficiency Growth

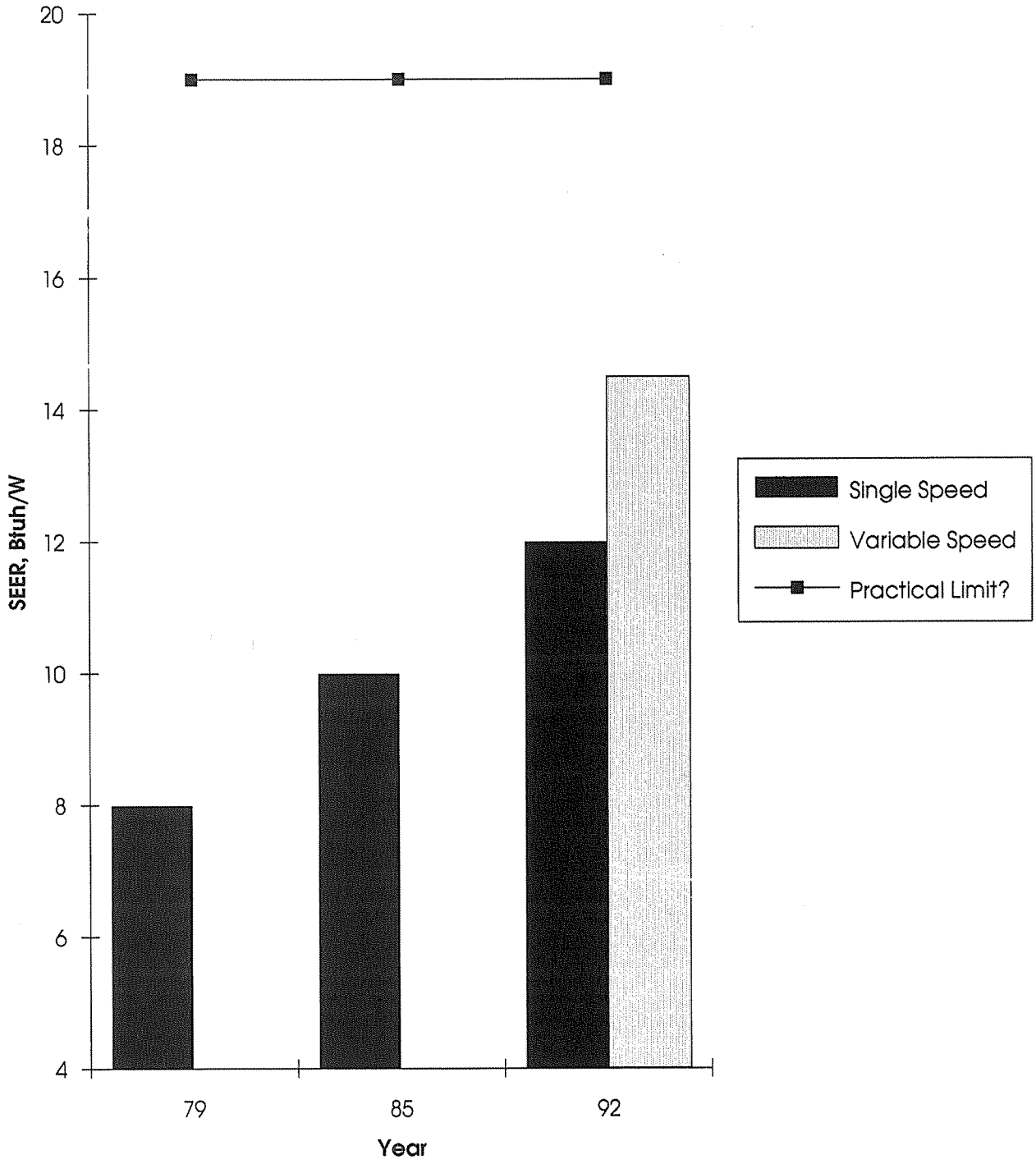

FLUOROCARBON VAPOR COMPRESSION TECHNOLOGY STATUS

BY

SONNY G. SUNDARESAN

MANAGER, MATERIALS ENGINEERING AND SYSTEMS CHEMISTRY

COPELAND CORPORATION

SIDNEY, OHIO

JUNE 24, 1993

PRESENTED AT BRECKENRIDGE, COLORADO

for the

ORNL/DUE/AFEAS WORKSHOP ON REFRIGERATION & AIR CONDITIONING TECHNOLOGY

Current State of Development

- Zero ODP refrigerant options for R-12, R-502 and R-22 have been identified and are under evaluations (examples with R-502 alternatives for commercial refrigeration presented).
- New synthetic lubricants, such as polyol esters are being developed to meet the needs with HFC refrigerants.
- Improvements in energy efficiency are being achieved with reciprocating and scroll compressors (see attachment).

Commercial Refrigeration Considerations

- Capacity Ratio
- Efficiency Ratio
- TEWI

Calculated at the following conditions

-40/130°F
-25/110°F
-40/90°F
20/120°F

Table 1
R502 Alternatives

Refrigerant	ODP	GWP	Glide, °F
125/143a/134a [52/44/4]	0.0	0.94	0.8
125/143a [45/55]	0.0	0.98	0.0
32/125/143a [10/45/45]	0.0	0.88	0.8
32/125/134a [30/40/30]	0.0	0.45	7.0

SGS 6/24/93

Table 2
Comparison of R502 Alternatives

Refrigerant	TEWI	COP	Direct	Indirect
R502	6489	1.39	2997	3492
125/143a/134a	5931	1.26	2896	3315
125/143a	6211	1.34	2816	3115
32/125/134a [30/20/50]	6893	0.72	1130	5763

Conditions -40/130°F
10%/year leak rate
20 year equipment life
100 year ITH

SGS 6/24/93

Table 3
Effect of Pressue Ratio on Volumetric Efficiency

Refrigerant	Pressure Ratio	Volumetric Efficiency
R502	18	37%
Blends Containing R32	20-25	20-25%

Conditions: -40/130°F

SGS 6/24/93

COMPRESSOR EFFICIENCIES

	TODAY'S SCROLL	TODAY'S RECIP.	FUTURE	
LOSSES				
Motor	13.0%	13.0%	10.0% →	8.0%
Mechanical	8.0%	4.0%	6.5%	
Flow	2.7%	10.0%	1.7%	
Leakage	2.8%	---	2.0%	
Thermal	5.5%	10.0%	5.0%	
USEFUL OUTPUT	68%	63%	74.8%	76.8%
CHEER (45°/100°)	19.0	17.0	20.9	21.45
ARI (45°/130°)	11.2	10.8	12.3	12.65

SGS 6/23/93

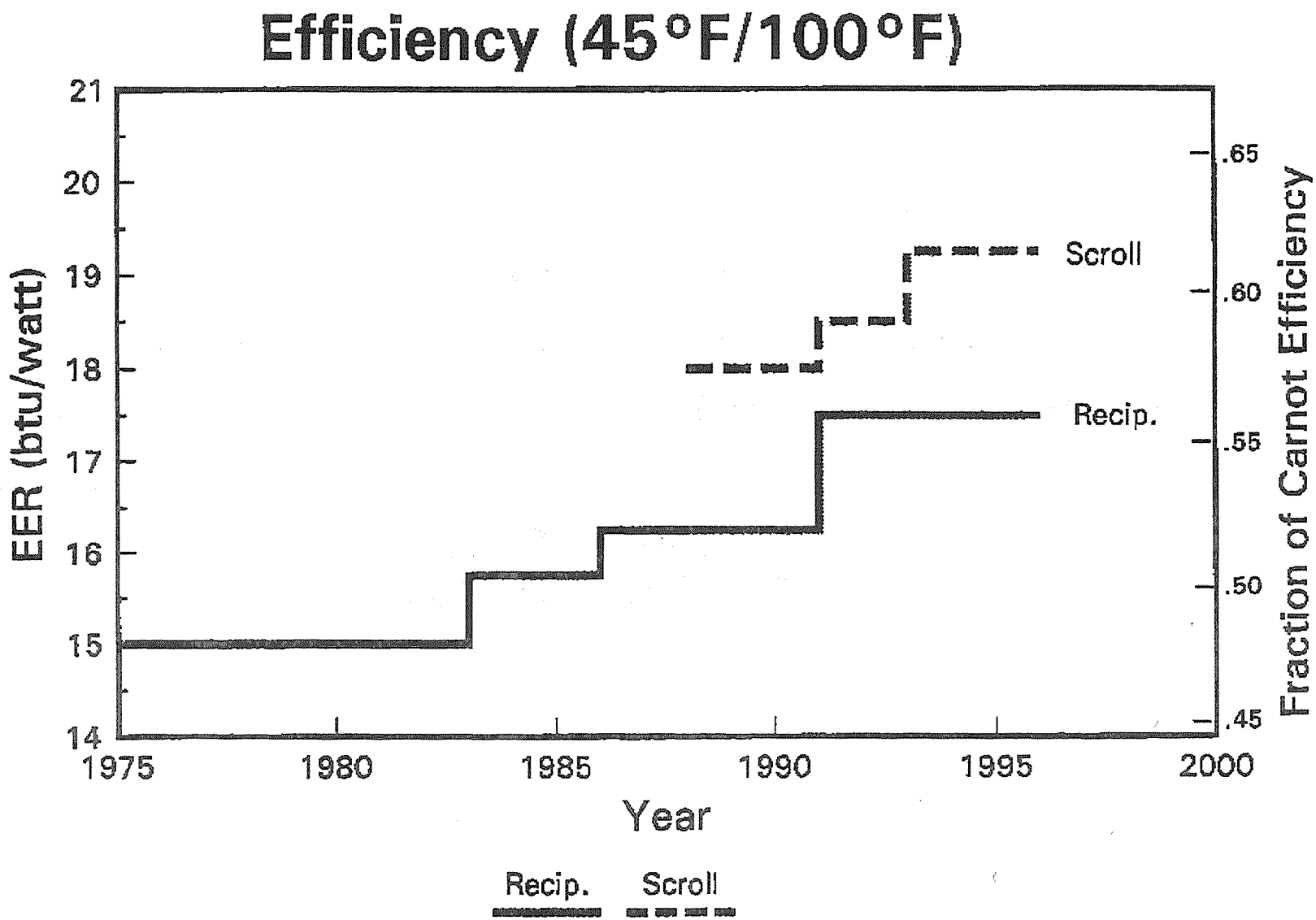
Efficiency (45°F/100°F)
EER (btu/watt)
21
20
19
18
17
16
15
14
1975
1980
1985
1990
1995
2000
Year
Fraction of Carnot Efficiency
.65
.60
.55
.50
.45
Scroll
Recip.
Recip.
Scroll

SGS 06/22/93

Technical and Other Issues

- Composition control aspects due to glide of near azeotrope HFC refrigerants.
- New synthetic lubricants (such as polyolester) and issues associated with them (such as hygroscopicity, lubricity, solvency characteristics).
- Uncertainty regarding GWP/CO2 related legislations and their impact on some HFC components such as HFC125, HFC143a.
- Design changes required by higher pressure refrigerants.

In Conclusion

- Vapor compression technology continues to improve in terms of energy efficiency (compressor efficiency and system efficiency).
- Vapor compression technology continues to be the best choice in terms of balance between cost, performance and reliability.

AFEAS WORKSHOP

ORNL/DOE

June 23-25, 1993

Refrigeration and Air Conditioning Technology Workshop

Breckenridge Hilton, Breckenridge, CO

Ammonia/Water Absorption Systems

Joe Marsala, P.E.
Senior Project Manager
Gas Research Institute
8600 W. Bryn Mawr Ave.
Chicago, IL 60631
312-399-5419

Ammonia/Water Absorption Systems

Technology Description

Ammonia/water absorption systems are heat actuated devices which accept heat at high and low temperature levels and reject heat at intermediate temperature levels. As a closed-cycle, heat-actuated device, ammonia/water absorption systems are bounded theoretically by dual Carnot limits and cycle stage limits, however, in practice, other mechanisms dictate performance levels. The thermodynamics of basic absorption cycles are discussed in Chapter 1 of the ASHRAE Fundamentals Volume (1993 edition). This paper will only discuss NH_3/H_2O absorption systems and their application to heat pump, air-conditioning, and refrigeration machines.

The simplest continuously operating two pressure NH_3/H_2O absorption system consists of four components and a solution pump. Analogous to vapor compression systems, the NH_3/H_2O absorption system has an evaporator where liquid NH_3 is vaporized and heat is added to the cycle, and a condenser where high pressure NH_3 vapor is condensed and heat is rejected. Instead of being coupled by a compressor, these two components are coupled by a generator and absorber. In the generator, NH_3 is boiled out of a solution of NH_3 and H_2O by a heat source. The NH_3 vapor then goes to the condenser. In the absorber component, the low pressure NH_3 vapor from the evaporator is absorbed into a solution which consists primarily of H_2O and a little NH_3 produced in the generator component. Once the NH_3 vapor has been absorbed into the liquid phase, this rich liquid (rich in NH_3) is pumped back to the generator by the solution pump, completing the cycle.

Single stage NH_3/H_2O absorption systems are distinguished by the type and quantity of heat recuperation within the cycle. The simplest method of heat recuperation is the sensible only heat exchange between the weak liquid (weak in NH_3), leaving the generator and the rich liquid (rich in NH_3), leaving the absorber. This cycle is known as the liquid heat exchange (LHE) cycle. The amount of sensible heat in the weak liquid limits the quantity of heat which can be transferred.

The next level of heat recuperation in a single stage NH_3/H_2O absorption system is known as the absorber heat exchange (AHE) cycle. This method of heat recuperation is characterized by latent (heat of absorption) to sensible heat exchange. The rich liquid is heated by the heat of absorption generated in the absorber component. The sensible heat capacity of the rich liquid stream limits the thermal recovery possible in this cycle.

The final level of heat recuperation (and highest efficiency) available in single stage NH_3/H_2O absorption cycles is known as the generator absorber heat exchange (GAX) cycle. In this cycle, heat of absorption is used to supply some of the heat of desorption requirements in the generator. In this latent to latent heat transfer, the working fluids themselves limit the amount of heat which can be transferred.

These three major single stage NH_3/H_2O absorption cycles are often augmented by other smaller heat exchangers within the cycle to reduce irreversibilities in an actual machine.

More complex NH_3/H_2O cycles have been proposed, which opens the way toward efficiencies greater than those possible with GAX. Discussion of these cycles is beyond the scope of this paper.

Mention should be made of the Platen-Munters NH_3/H_2O absorption refrigerator cycle. This technology uses a non-condensable gas to equalize the pressure between the evaporator and condenser and all solution flows are accomplished by bubble pumps and gravity flow. The result is a no-moving parts, heat actuated, domestic refrigerator product. This is perhaps the most widely used NH_3/H_2O absorption product in the world with more than one million refrigerators built annually for world-wide markets.

Applications

Ammonia/water absorption systems are currently used in residential and light commercial air conditioners, domestic type refrigerators, and in large industrial refrigeration applications. Ammonia/water GAX cycles currently under development at DOE/ORNL and GRI are intended for use as year round heat pumps providing both heating and cooling for residential and light commercial applications. This equipment can be configured as either single packaged or split systems depending on the market need. The performance and efficiency of these systems is such that an ammonia/water GAX heat pump will be attractive in substantially all of the domestic (U.S.) unitary HVAC markets. The heat pump market is the largest market offering year round benefits to the user. As this market matures, other product applications will develop easily from the basic GAX technology. These other applications could be cooling only (air conditioner) products, heating only products, water heating heat pumps, and refrigeration applications.

Benefits

Ammonia/water GAX absorption systems currently under development offer benefits to users of the equipment and society as a whole. The use of NH_3/H_2O completely avoids CFC, HCFC, and HFC refrigerants. In a heat pump configuration, an NH_3/H_2O GAX system uses our domestic resource of natural gas in an optimum way by increasing summer gas use and decreasing winter gas use, thereby utilizing the installed capital base more efficiently. By using primarily natural gas to power the heat pump in the summer, the use of the already strained electric generation, transmission and distribution grid system will be avoided, offsetting the need for large investments to meet the demand for comfort cooling. Conversion to GAX cooling would free up capacity to meet traditional growth requirements and improve electric system load factors (reducing the cost of electricity to all customers.)

From an equipment users perspective, the NH_3/H_2O GAX absorption system will provide the same heating and cooling functions as existing equipment, but at substantial operating cost savings in most parts of the country. As a gas-fired heat pump, its heating efficiency exceeds the efficiency of a gas furnace by 20% to 80%, and in the cooling mode, it avoids substantial electric demand charges in many markets.

Conservative target, steady state efficiencies for an ammonia/water GAX heat pump are 1.4 COP heating (gas-fired) at 47°F ambient and 0.9 COP cooling (gas-fired) at the DOE/B test conditions. Parasitic power consumption targets for the outdoor package are in the range of 150 to 190 watts per ton of refrigeration capacity.

Technical Issues

The technical issues and problems surrounding the development of NH_3/H_2O absorption systems fall into two broad categories. The first category relates to those technical issues and problems which surfaced during the introduction and subsequent sales of the NH_3/H_2O air conditioner in the 60's and 70's by Whirlpool, Bryant, and Arkla. Many of these problems were never completely resolved and remain issues today. The second category of technical issues or problems concerns those associated with the development of the next generation NH_3/H_2O absorption cycle, the GAX cycle. These problems push the limits of single stage NH_3/H_2O cycles into previously unknown territory. Also, the heat pump configuration of GAX adds complexity when compared to the simple air-conditioner-only application.

The first category consists of four broad areas of concern: the solution pump, non-condensable gas generation, parasitic electric power consumption, and issues relating to cost effective manufacturing techniques and associated quality control.

The solution pump has been an area of particular difficulty because of the lack of a lubricant in NH_3/H_2O systems and the need for long life and low cost. Early pumps were of the positive displacement type; either diaphragm or piston. Reliability problems with some pump designs caused field problems with the air conditioner product. Non-condensable gas generation in the absorption sealed system can lead to reduced capacity and may indicate corrosion of metal. Technical issues relating to non-condensable gas generation are fired-vessel design, material preparation techniques and inhibitor levels, and the use of aluminum in evaporators. Parasitic electric power consumption of the gas-fired NH_3/H_2O absorption system has become even more important with the historic narrowing of electric and gas rates and widespread implementation of electric demand and seasonal charges. This issue is addressed through efficiency improvements in air moving and pumping of fluids. The final topic in this first category concerns cost effective manufacturing techniques and association quality issues. This encompasses welding and brazing methods for mild steel sealed systems, manufacturing process sensitivity, and raw material specifications. Appropriate factory-floor quality measures must be developed and integrated throughout the manufacturing process.

The second major category of technical issues and problems relates specifically to the development of the next generation NH_3/H_2O absorption cycle, the GAX cycle. The most important issue facing GAX is the development of cost-effective simultaneous heat and mass transfer surfaces for use in the absorber and generator. These specialized heat and mass exchangers are required to maintain the desired temperature and concentration profiles for achieving full performance from the sealed system. With the advent of more strict environmental laws, the use of chromate compounds as corrosion inhibitors will not be acceptable. Work is underway at DOE and GRI to find suitable replacements for chromates in NH_3/H_2O absorption systems. Since the use of the GAX cycle removes one degree of freedom from the operation of the hardware, control and control related issues become significant. Control methods and control points within the sealed system need to be addressed for optimum steady state and seasonal performance.

In the United States, both GRI and DOE have comprehensive programs in place which relate to all the above technical issues and problems. World-wide there is also on-going work in many of these areas.

Economics

A residential product application of an ammonia/water GAX heat pump cycle has been costed from a manufacturing perspective in several studies. This 3-ton absorption heat pump was designed by Phillips Engineering with DOE support. An independent company developed factory costs for the outdoor package for a production level of 50,000 units per year. The estimated base factory cost for the outdoor GAX system was \$890.00 $\pm$ 10% (1985 dollars). To these costs would be added the cost of the distribution chain and other corporate costs, as well as an indoor blower and coil with miscellaneous minor parts. The customer would also pay for an installation charge which can be highly variable. The total installed cost for the system might range from \$3,200 to \$3,800. This, of course is dependent on reaching the cost/capacity targets for the absorption sealed system and developing the appropriate, cost effective manufacturing processes.

In this application, the most widely used competing system that performs the same function is a gas furnace and split system electric air conditioner. If these cost projections hold true, then there would be no first cost premium of the GAX system when compared to the conventional alternative in most areas. Any increase in the cost of a GAX machine over the conventional alternative would confront consumers with a first-cost investment to be recovered in operating savings.

Technology Outlook

In terms of the status of NH_3/H_2O absorption technology as represented by GAX cycle and hardware development, Phillips Engineering, supported by DOE, currently leads with a number of operating packaged prototype heat pumps under test both in its own labs and in those of a major manufacturer. Other approaches to NH_3/H_2O GAX are under development in the U.S. by GRI, in Japan with MITI support, and in Europe. In an optimistic scenario, the full scale participation of a major HVAC manufacturer could cause an NH_3/H_2O GAX heat pump product to enter the U.S. market as early as 1996. A more realistic U.S. date might be 1998 market entry with more rapid scale up of a fully developed product.

Market penetration in the U.S. will be a direct function of product installed cost. At equivalent cost to existing furnace/air conditioner combinations market shares can be expected in the double digits of the residential/commercial unitary market. Significant first cost premiums in the absence of rebates or other incentives would significantly reduce market share and slow product introduction. However, environmental or other regulatory market dislocations may accelerate the market penetration of a GAX product in spite of first cost premiums. Worldwide markets, especially in Japan and the Pacific Rim are expected to be substantial.

References:

"GAX Absorption Cycles - Recent Developments Have Sparked Renewed Interest"; IEA Heat Pump Centre Newsletter; Vol. 10, No 4, December 1992

"Development of a High Efficiency, Gas Fired, Absorption Heat Pump for Residential and Small-Commercial Applications"; Phase I Final Report Analysis of Advanced Cycles and Selection the Preferred Cycle; ORNL/Sub/86-246-10/1; B.A. Phillips

"Proceedings of the 2nd DOE/ORNL Heat Pump conference: Research and Development on Heat Pumps for Space Conditioning Applications"; CONF-8804100

"Proceedings of the DOE/ORNL Heat Pump Conference: Research and Development on Heat Pumps for Space Conditioning Applications"; CONF-841231

LITHIUM BROMIDE ABSORPTION CHILLERS

JAY A. KOHLER
YORK INTERNATIONAL CORPORATION

JUNE 1993

ORNL / DOE / AFEAS WORKSHOP

NOT-IN-KIND AND NEXT GENERATION TECHNOLOGIES
FOR REFRIGERATION AND AIR-CONDITIONING APPLICATIONS

Lithium Bromide Absorption Chillers

Background

Absorption chillers using lithium bromide as the absorbent and water as the refrigerant have been in use for many years. Such chillers are classified as single effect or double effect. Absorption chillers are heat driven and are classified by heat source as direct-fired, steam-fed, or heat recovery. They compete in the same market with electrically driven vapor compression equipment. The economics of absorption versus vapor compression is heavily influenced by fuel costs, utility rate structures, and incentives. This has led to an up and down market for these chillers.

Single effect chillers enjoyed a favorable market share in the US until the early 1970's. The advent of fuel shortages and higher fuel costs led to a decline in the absorption chiller market share in the US. Introduction of a steam fed double effect machine in the US by one manufacturer (Trane) was not enough to prevent this decline. Product development by chiller manufacturers in the US came to a standstill.

In contrast, different economic conditions led to continued development of absorption technology in Japan. Absorption chillers enjoyed an increasing market share. New, double effect direct-fired and steam-fed chillers were developed and improved upon by several Japanese manufacturers. In the late 1970's, one manufacturer, Hitachi, began exporting their double effect chillers to the US. Throughout most of the 1980's, the absorption chiller market in the US remained small.

Towards the end of the 1980's, this situation began to change, and absorption chillers have enjoyed a resurgence. Limited electrical power generating capability during summer peak load conditions is one important factor. The cost of providing transmission lines and equipment can also be a factor, as in New York City for example.

In 1992, York International began to produce double effect direct-fired and steam-fed chillers under license from Hitachi. Other US manufacturers began to sell double effect machines, produced in Japan. With this resurgence has come an increased awareness for the need to improve the state of the art in this technology. It is anticipated that these improvements will take several forms.

Improvements can be made to single and double effect machines. These improvements will result in lower manufactured costs or improved performance. Triple effect machines have been proposed to permit heat input at higher temperatures, and consequently, higher COPs. Consequently, the global warming impact will be influenced

by these developments.

Technology Description - Present Technology

The single effect machine represents the simplest cycle. The attached figure shows such a cycle. A mixture of lithium bromide and water is circulated from the absorber, through the heat exchanger, to the generator, back to the heat exchanger and to the absorber. Circulation of solution is accomplished via a pump. Heat input to solution in the generator causes the solution to become more concentrated and consequently, increases its ability to absorb refrigerant. The water which was vaporized in the generator is condensed in the condenser. The condensed liquid flashes in the lower pressure evaporator, where it is sprayed over the evaporator tubes. Heat input from the chilled water evaporates the refrigerant, which is absorbed by solution in the absorber.

Cycle temperatures and pressures are dictated by equilibrium properties of the lithium bromide water mixture. System pressures are very low - on the order of 60 mmHg absolute in the condenser and 6 mmHg absolute in the evaporator. The maximum solution concentration is limited by lithium bromide solubility and a need to avoid crystallization at high concentrations. As a result, heat input for single effect machines is typically below 240 F. Most equipment is steam fed, requiring low pressure (less than 15 psig) steam. Hot water or other low grade waste heat sources can also be used. COPs for steam units typically peak around .7.

Double effect machines have two generators. Heat input into the system occurs in the high temperature generator. Vapor is generated from solution in the high temperature generator at a pressure of about 12 psia. This vapor is the heat source for the low temperature generator, in which solution is concentrated and refrigerant boiled off. The refrigerant vapor from both generators is condensed and goes to the evaporator, where the useful cooling occurs. The double effect machine is very much like the single effect machine, except that refrigerant is generated in both a low and high temperature generator.

Solution flow to the generators can be either in series (i.e. to the high temperature generator followed by the low temperature generator) or in parallel (i.e. flow is divided between the high temperature and low temperature generators). In each case, two or more solution heat exchangers are typically used.

Direct-fired units are the most common type with the fuel typically being natural gas. Steam-fed units require a steam temperature on the order of 350 F, resulting in steam pressures of about 115 psig. Heat recovery applications are possible, although not common. COPs for direct-fired chillers are on the order of 1.0. Steam units with COPs of 1.2 are widely available. The lower COPs for the direct-fired units reflect the inefficiency of the combustion

process. A side benefit of direct-fired chillers is an ability to simultaneously provide hot water - a benefit which often negates the need for a separate boiler.

Technology Description - New Technology

Improvements to existing single and double effect products can be expected to improve the product cost and/or performance of those products. For example, recent chiller designs have incorporated electronic control panels for improved chiller control.

Because of their lower COPs, absorption chillers require greater heat rejection than vapor compression equipment. Some newer chillers help with that situation by permitting the same cooling tower water flow (i.e. 3 GPM/Ton) as vapor compression equipment.

The size and cost of these products is largely a function of the amount of heat exchange surface required, which is often several times the amount of surface required for an equivalent capacity vapor compression chiller. Improvements to the design of heat exhangers and application of improved tube geometries has the potential for cost reduction.

If the limits imposed by the crystallization issue can be overcome, the potential exists for cycle improvements by operation at higher solution concentrations. The use of organic crystallization inhibitors has been proposed and is being evaluated for use with single and double effect machines. Development work, sponsored by GRI, indicates that improvements in chiller capacity or COP may be possible with some chiller modifications.

The most significant improvements in COP would come from cycles which allow heat input at higher temperatures than present double effect machines. Triple effect machines offer such potential. A triple effect cycle is one which takes in a unit of heat at high temperature to evaporate a unit of refrigerant from a weak (in absorbent) solution, rejecting the heat at lower temperature(s) and reusing it to boil off two additional increments of refrigerant. A wide range of lithium bromide based triple effect machines have been and continue to be proposed.

Some of those cycles involve use of a double loop, in which case the lower loop typically uses lithium bromide and the upper loop uses some other fluid. Some form of heat exchange exists between the upper and lower loops.

Other versions involve use of lithium bromide only. Many versions are possible, involving various methods for heat exchange between different components at different temperature levels.

For a specific cycle, the maximum full load COP depends on many

factors such as the heat exchange efficiency and the maximum operating temperature. Assuming 'practical' amounts of heat exchange surface and 'reasonable' maximum operating temperatures, various researchers have claimed full load COPs from under 1.3 to over 1.8. Whether or not machines with COPs over 1.8 are practical remains to be seen as several obstacles to their construction exist. These COPs do not account for combustion losses in the case of direct fired equipment.

Application, Benefits, & Economics

Absorption water chillers are sold in the US in capacities from 100 to 1500 Tons. All have water cooled absorber/condensers. The principal competition for absorption chillers is electrically driven vapor compression equipment. The decision as to which product to use is generally made based on life cycle costs. Since absorption chillers have higher first costs, significant operating cost savings or other incentives are required to justify their purchase. In some cases, utilities offer significant rebates towards the purchase of gas or steam driven equipment in order to reduce peak summer electrical demand.

Single effect absorption chillers are the only technology available for producing chilled water from low temperature (i.e. 190 to 240 F) waste heat sources. Nearly all new applications for single effect chillers involve use of waste heat so that operating costs for such applications are low. Two general sources of waste heat are process industries (e.g. oil refineries and paper mills) and electric generation plants (e.g. extraction steam off steam turbines). Chilled water generated from such applications is used for either comfort cooling, process cooling, or, in the case of electric generation, gas turbine inlet air cooling. Process applications are limited to those requiring chilled water temperatures of 40 - 42 F or above.

Double effect machines represent the most efficient, commercially available absorption technology. Because they require a higher temperature heat source, applications for waste heat recovery are not common. As stated above, the economics for double effect machines are determined by life cycle costing. As a rough guide, double effect chillers sell for a 250 $/Ton premium over electrical chillers with COPs of 5.75 or better. Natural gas costs tend to be uniform nationwide. Consequently, the incremental cost of electricity for the locality in question is a key factor in the life cycle costing. The incremental cost can be determined by evaluating the cases with and without electrically driven chillers and is a function of demand charges. The majority of units do not run as peaking duty units, but are also used for base load duty.

The economics for new technologies would be no different. For

single or double effect machines, performance and cost improvements will provide lower life cycle costs. For triple effect machines, the two key unknowns are the cost premium for such machines and COP. Once known, the economics of these machines versus electrically driven or double effect absorption equipment can be determined.

Technical Issues

The variety of new technologies proposed for lithium bromide absorption chillers raises a variety of technical issues. Since the direction and status of development work by manufacturers is generally confidential, discussion of technical issues is limited.

Improvements in product costs are possible as older chiller designs come under competitive cost pressures. Improved product packaging offers one possibility. Improvements in the design of heat transfer surfaces require a fundamental understanding of the heat exchange process combined with experience in the manufacture of cost effective heat transfer surfaces. In the case of absorber design, experience has shown that use of a heat/mass transfer additive is required in order to be cost effective.

Evaluation of crystallization inhibitors involves several steps. First is a systematic review of potential candidates in terms of impact on system performance and compatibility with existing chillers. Thermodynamic and thermophysical property data are required by the designer. The impact of property changes on the design of individual chiller components needs to be evaluated. The potential for chemical interaction with corrosion inhibitors and heat transfer additives needs to be considered. Construction of a functional chiller is required to prove out design details.

Development of a triple effect machine represents a more significant advance in technology than any of the above changes. Identification of technical issues depends on the cycle chosen and, as stated above, there are many cycle possibilities. None-the-less, some general statements can be made. Operation at higher temperatures raises concerns about chemical reactions which occur at accelerated rates at higher temperatures. The corrosive nature of lithium bromide solution is enhanced by operation at higher temperatures. If alternate fluids are used, as in dual loop cycles, chemical reactions in the presence of those fluids must be considered. Corrosion resistant materials may be required. The ability of heat/mass transfer additives to survive higher temperatures is a concern. Equipment must be capable of operating efficiently at part load conditions and be able to go to standby conditions without crystallizing. Thermodynamic and thermophysical property data are required. For lithium bromide, this means data at higher temperatures and pressures than is presently available.

Technology Outlook

Improvements in the design of single and double effect chillers will continue as competition forces manufacturers to reduce cost and improve performance. Improvement in COP for such chillers is possible, but limited. Substantial improvements in COP require use of systems, such as the triple effect cycles, which allow for heat input at higher temperatures and effective internal heat exchange. A variety of triple effect cycles are possible. Different costs and different COPs are to be expected with each version. The practicality of such equipment will ultimately be decided by an ability to demonstrate reduced life cycle costs versus other commercially available equipment.

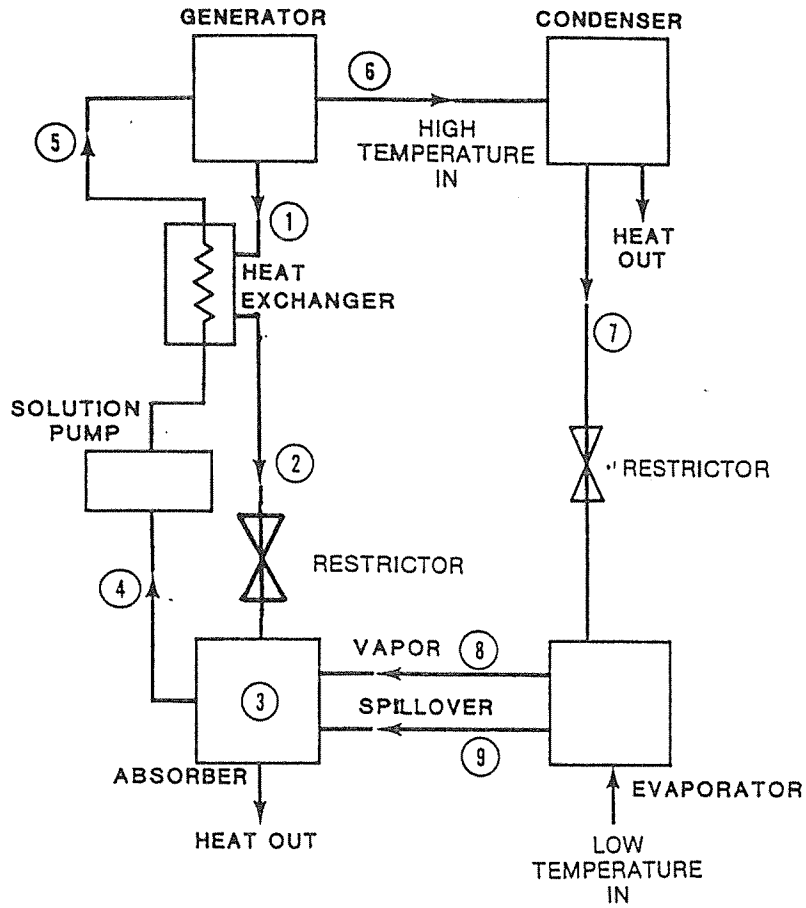

Fig. 20a Lithium Bromide-Water Single-Stage Absorption Refrigeration Cycle

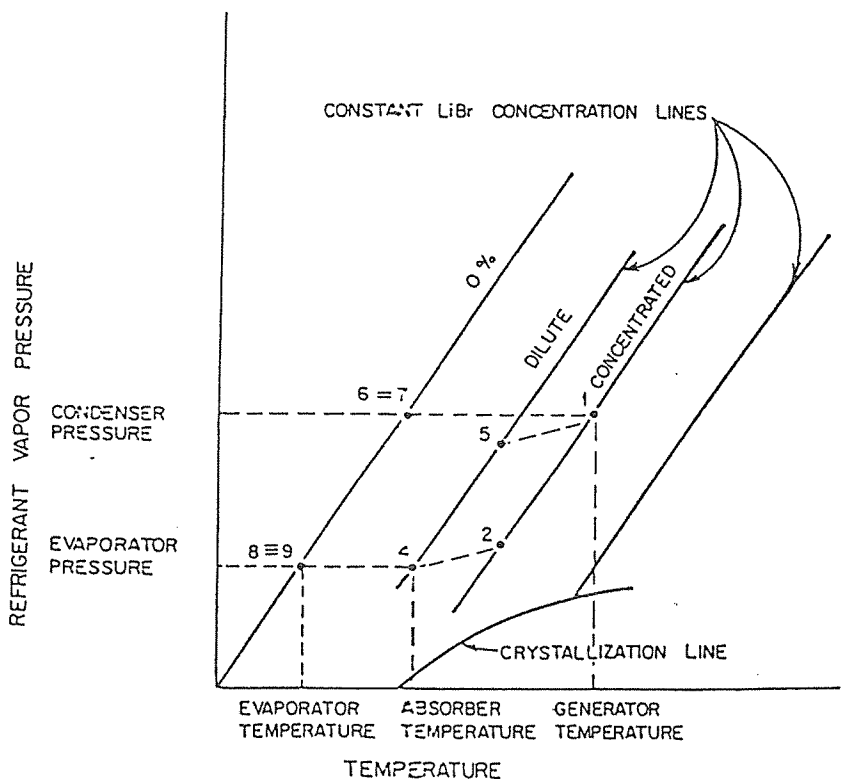

Fig. 20b Pressure-Temperature State Points for the Lithium Bromide-Water Single-Stage Absorption Refrigeration Cycle

VAPOR COMPRESSION CYCLE WITH SOLUTION CIRCUIT

Eckhard Groll, Reinhard Radermacher
University of Maryland
CEEE - Center for Environmental Energy Engineering
College Park, MD 20742-3035

1. Technical Description

The principle of vapor compression cycles with solution circuits (VCCSC) has been known in the literature for about 100 years [1]. The first theoretical investigations were carried out by Altenkirch [2,3] and indicated a large energy savings potential. Based on this potential and the additional need to replace the ozone depleting CFCs, the research activities toward the VCCSC have increased rapidly during the last 10 to 15 years and several different experimental plants were build [4,..,16].

The VCCSC is a vapor compression cycle, which employs a working fluid mixture consisting of a refrigerant and an absorbent, which are characterized by a large boiling point difference. The evaporation of the mixtures is not complete so that the fluid leaving the desorber (comparable to the evaporator in a compression cycle) is a vapor/liquid mixture. Vapor and liquid are usually separated at the desorber outlet. While the vapor proceeds to the mechanically driven compressor, the liquid is recirculated to the absorber (comparable to the condenser in a compression cycle) with a solution pump in a separate liquid line. Both, vapor and liquid meet again at the inlet of the absorber. Since there are two liquid streams available, one from the absorber to the expansion valve, and the other from the solution pump to the absorber, it is advisable to bring them into heat exchange for better performance of the cycle. Figure 1 shows the schematic of such a cycle in a pressure-temperature-diagram so that the relative location of the heat exchangers is indicative of the temperature and pressure levels.

Possible variations of this cycle have been discussed by Alefeld [17].

There are two major differences between the conventional compression cycle and the VCCSC employed here. The first is the usage of a mixture of working fluids instead of a pure fluid. The second is that the mixture does not evaporate completely. Rather, a two-phase mixture is leaving the evaporator. By introducing a working fluid mixture two important features are accomplished:

First, although desorption and absorption occur at constant pressures, the saturation temperatures are no longer constant but vary with the composition changes of the liquid and the vapor phases which occur during the phase change processes. This results in the so-called 'gliding temperature intervals'. These temperature glides can be adjusted over a wide range or, if desired, eliminated almost completely.

Second, a change in the overall concentration of the mixture circulating through the cycle results in a change of the vapor pressures and densities at a given temperature and therefore in a change of the capacity of the entire unit. Both of these features, gliding temperatures and capacity control by means of concentration change can be used to increase the overall COP compared to conventional compression systems.

So far, two modifications of the VCCSC have been discussed in the literature. First, the introduction of two stage solution circuit, as shown in Figure 2. This can lead to a reduction of the pressure ratio of up to 45% compared to the pressure ratio of cycles with pure refrigerants for a given temperature lift [13]. With this technique a single stage compressor can achieve a major increase in temperature lift and/or a reciprocating compressor can operate at higher volumetric efficiencies.

Second, the modification of the VCCSC featuring a desorber/absorber heat exchange, as

shown in Figure 3. In this case, the gliding temperature intervals in the desorber and the absorber overlap, i.e. the highest desorption temperature becomes higher than the lowest absorption temperature, and a portion of the absorber is able to supply heat to a part of the desorber. This results in an even further reduction of the pressure ratio than obtained with the cycle with the two-stage solution circuit [16]. However, in all cases any decrease in pressure ratio is traded in for an increase in mass flow rate through the compressor as required by thermodynamics [18].

2. Application

The most important feature of VCCSCs with regard to applications is the enormous flexibility. Further, applications are highly dependent on the mixture used in the cycle, the cycle configuration and the desired and available temperature levels. Examples for likely applications are:

High temperature heat pumps,
High temperature lift heat pumps,
Combined heating and cooling/refrigeration,
Commercial/industrial heating and/or cooling,
Dehumidification,
Solvent recovery,
Food processing and
Process industry.

Other applications will become obvious as more information about the VCCSC and their potential becomes available.

3. Benefits

The main benefits are energy efficiency and the high degree of flexibility. In particular, the

following benefits are important:

Adjustable temperature glide,
Energy efficiency,
Low, adjustable overall pressure levels,
Very low pressure ratios are possible (50% or less of what is commonly expected),
Use at temperature levels beyond critical temperature of refrigerant and at low pressures,
Capacity control by changing concentration.

4. Technical Issues

The following technical issue have to be addressed:

Cycle Selection and Integration: A large number of cycles is known, however, the feasibility and applicability of these cycles has not been assessed at all. While VCCSCs usually tend to become rather complex configurations, there are options to reduce the complexity considerably for special applications. Many of those are only at the beginning of being explored. Further, certain cycle selections offer the opportunity for alternative and possible more beneficial system integration. These options have not been considered so far. Another possibility is the cogeneration of power and/or heating and/or refrigeration. System integration with absorption heat pumps and with chemical processes in the chemical industry is yet another opportunity.

Controls: Only a rather limited number of experiments has been conducted with VCCSCs. In those rather simple systems, control issues did not turn out to be a major concern. However, with new system integration concepts, cycle options and real life applications control issues have to be addressed.

Component Selection: Such questions as oil-free, oil-lubricated or solution-lubricated compressors, pump design and flow rate optimization, heat exchanger technology and allocation of heat transfer area have to be addressed.

Design Tools: In order to facilitate the use of this newly discovered technology, comprehensive

design tools have to be provided in the form of verified simulation models. These models have to be written and tested on suitably designed hardware.

Economics: For specific applications it is necessary to work out detailed cost/benefit analyses that are also compared to alternative technologies.

5. Economics

Not much work was done in terms of economic analyses especially on a first cost basis. Estimates of the operating cost, however, indicate that the VCCSCs have great potential in large temperature lift applications, industrial applications and wherever conventional technology reaches its limits. It is anticipated that certain VCCSC systems can potentially outperform conventional technology. Even in conventional HVAC applications VCCSC can provide interesting design options especially in conjunction with new components such as 'new' rotary compressor technology.

6. Technology Outlook

VCCSCs represent a 'young' technology that is only at the beginning of being explored. Due to the large number of cycles, many design options become available and a wide variety of possibilities for system integration.

It is anticipated that this technology will first be used in custom designed applications and large systems. Also for those applications where conventional technology reaches its limits (temperature range, pressure ratio, pressure ranges) are likely areas for VCCSC to succeed. As experience is gained, it is possible that the applications reach as far heating and air-conditioning. At this point it is difficult to provide a more reliable assessment of the performance potential.

References

[1] Osenbrück, A.: Verfahren zur Kälteerzeugung bei Absorptionsmaschinen; Deutsches Reichspatent DRP 84084 (1895)

[2] Altenkirch, E.: Kompressionskältemaschine mit Lösungskreislauf (Vapor Compression Cycle with Solution Circuit); Kältetechnik, 2 (1950) 10, S. 251-259, 2 (1950) 11, S. 279-284, und 2 (1950) 12, S. 310-315

[3] Altenkirch, E.: Der Einfluß endlicher Temperaturdifferenzen auf die Betriebskosten von Kompressionskälteanlagen mit und ohne Lösungskreislauf (Influence of the Temperature Glides on the Running Costs of Vapor Compression Cycles with and without Solution Circuit); Kältetechnik, 3 (1951) 8, S. 201-205, 3 (1951) 9, S. 229-234, und 3 (1951) 10, S. 255-259

[4] Bercescu, V. et al.: Aspects du fonctionnement d'une instaallation expérimentale de pompe de chaleur avec compression mécanique et circulation additionelle de la solution; Proc. of the XVIth Int. Congress Refrig., Commission E2, Paris, Frankreich (1983), S. 173-178

[5] Mucic, V.; Scheuermann, B.: Zwei-Stoff-Kompressions-Wärmepumpe mit Lösungskreislauf (Two Component Compression Heat Pump with Solution Circuit); Pilot Plant Mannheim/Waldhof, BMFT-Forschungsbericht T 84-197 (1984)

[6] Stokar, M.; Trepp, C.: Compression Heat Pump with Solution Circuit, Part 1: Design and Experimental Results; Int. J. Refrig., 10 (1987) 3, pp. 87-96

[7] Malewski, W. F.: Integrated Absorption and Compression Heat Pump Cycle using mixed Working Fluid Ammonia and Water; Proceedings of the 2nd International Workshop on Research Activities on Advanced Heat Pumps, Graz, September (1988)

[8] Mučić, V.: Resorption Compressions Heat Pump with Solution Circuit for Steam Generation using Waste Heat of Industry Heat Source; Newsletter of the IEA Heat Pump Center, 7 (1989) 1, S. 14-15

[9] Rane, M.V.; Radermacher, R.; Herold, K. E.: Experimental Investigation of a Single Stage Vapor Compression Heat Pump with Solution Circuit; Proc. of the ASME Winter Annual Meeting, Advances in Industrial Heat Pump Technology, AES Vol. 8 (1989), S. 41-45

[10] Bergmann, G.; Hivessy, G.: Experimental Hybrid Heat Pump of 1000 kW Heating Capacity; Proc. of the 4th Int. Conf. on Application and Efficiency of Heat Pump Systems, 01.-03. Oct., München (1990). sti, Oxford

[11] Ziegler, F.; Hämmer, G.: Experimental Results of a Double-Lift Compression-Absorption Heat Pump; Proc. of the 4th Int. Conf. on Application and Efficiency of Heat Pump Systems, 01.-03. Oct., München (1990). sti, Oxford

[12] Kawada, A.; Otake, M.; Toyofuku, M.: Absorption Compression Heat Pump using TFE/E181; Proc. of Absorption Heat Pump Conf., 30. Sep. - 02. Oct., Tokyo, Japan (1991), S. 121-126

[13] Rane, M. V.; Radermacher, R.: Experimental Investigation of Two Stage Vapor Compression Heat Pump with Solution Circuits; Proc. of the XVIIIth Int. Congress Refrig., August 10-17 (1991) Montreal, Quebec, Canada

[14] Torstensson, H.; Nowacki, J.-E.: A Sorption/Compression Heat Pump Using Exhaust Air as Heat Source; Proc. of Absorption Heat Pump Conf., 30. Sep. - 02. Oct., Tokyo, Japan (1991), S. 103-108

[15] Groll, E.A.; Kruse, H.: Kompressionkältemaschine mit Lösungskreislauf für umweltverträgliche Kältemittel (R23/DEGDME und CO_2/Aceton)(Vapor Compression Cycle with Solution Circuit for Environmental Friendly Refrigerants (R23/DEGDME and CO_2/Acetone)); KK DIE KÄLTE und Klimatechnik, Gentner Verlag Stuttgart, April (1992), pp. 206-218

[16] Groll, E.A.; Radermacher, R.: Vapor Compression Heat Pump with Desorber/Absorber Heat Exchange; submitted to Intl. Absorption Heat Pump Conf., New Orleans, January 19-21 (1994)

[17] Alefeld, G.: Heat Conversation Systems, Lecture Notes; Technical University of Munich, Physics Department E19, 8046 Garching, Germany (1983)

[18] Radermacher, R.: An Example of the Manipulation of Effective Vapor Pressure Curves by Thermodynamic Cycles; J. Eng. for Gas Turbines and Power, 10 (1988) 110, pp. 647-651

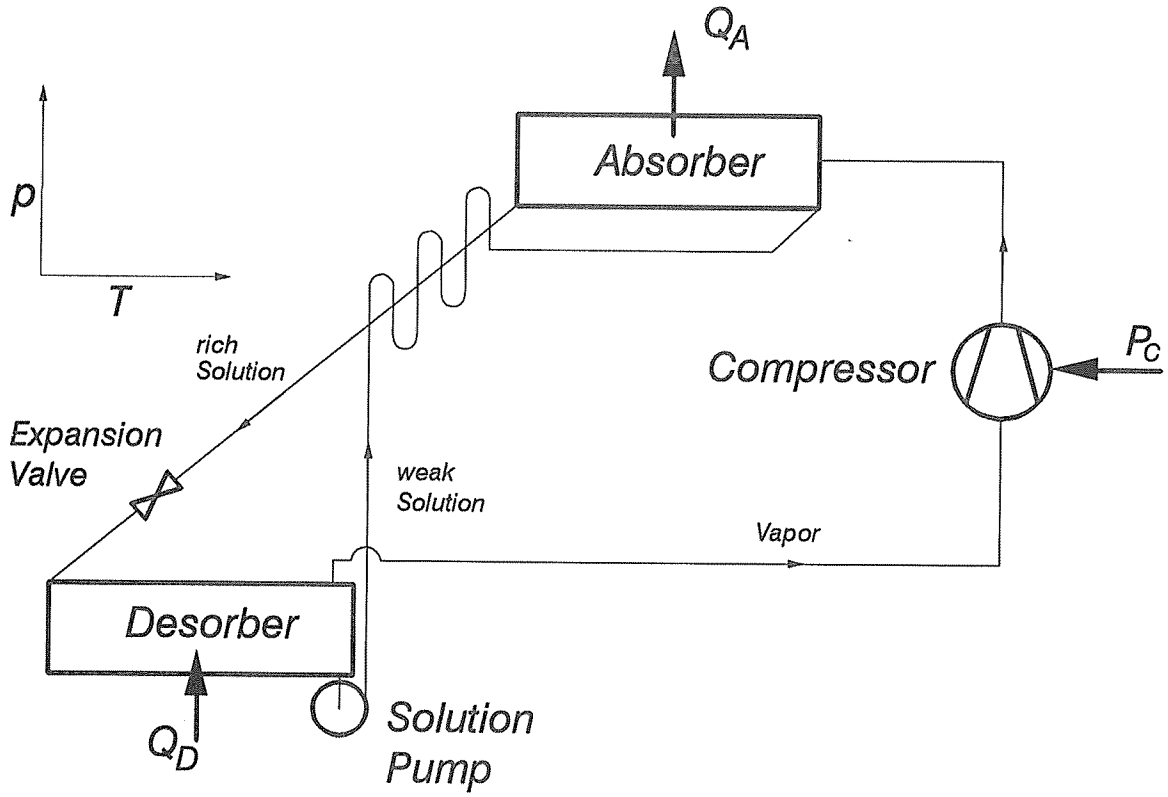

Figure 1: Vapor Compression Cycle with Solution Circuit

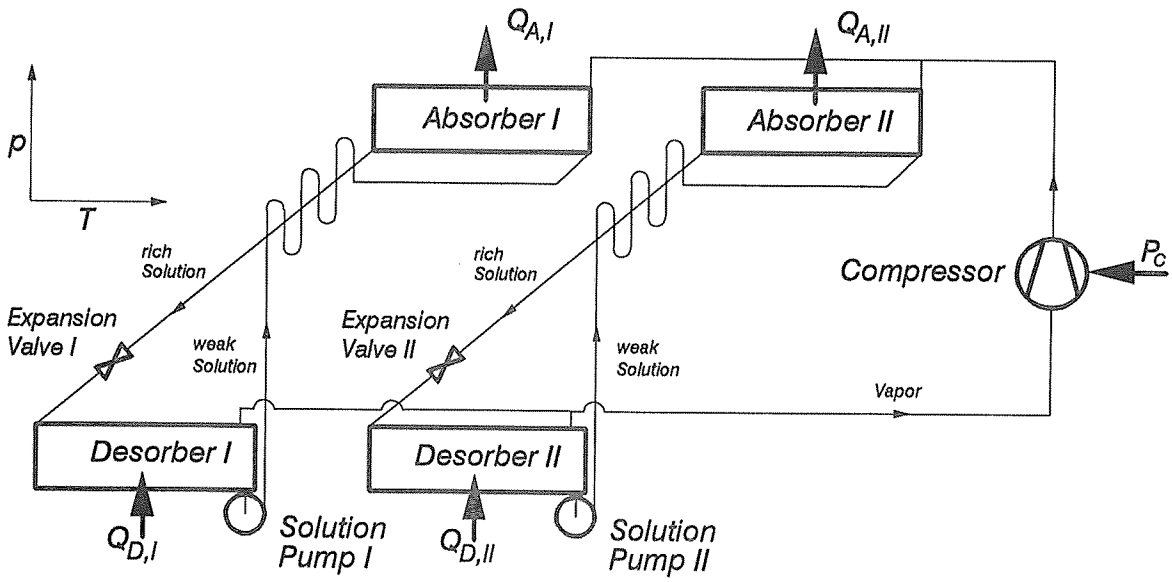

Figure 2: Vapor Compression Cycle with two-stage Solution Circuit

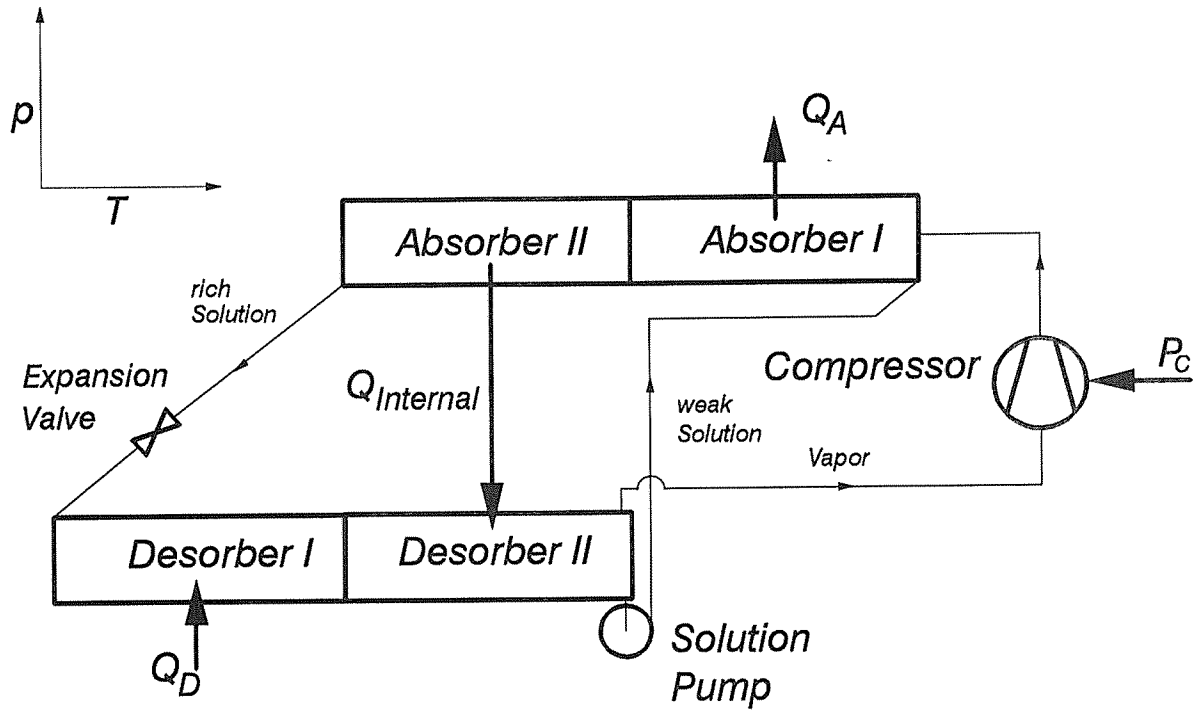

Figure 3: Vapor Compression Cycle with Solution Circuit and Desorber/Absorber Heat Exchange

Liquid Desiccant Air Conditioners: An Attractive Alternative to Vapor-Compression Systems

Andrew Lowenstein, Ph.D.
AIL Research, Inc.
Princeton, NJ

1.0 Introduction

The 1990s are a challenging decade for the HVAC industry. The need for ever more efficient heating, cooling, ventilation and dehumidification technologies is more urgent today than during the "Energy Crisis" of 1970s--energy resources are more depleted and the energy demands of a growing global population continue to increase.

However, the development of more efficient HVAC technologies is much more constrained now than it was twenty years ago. CFCs and HCFCs are no longer available. CO_2 emissions should be curtailed as a prudent response to potential global warming. Ventilation rates to buildings must be increased to insure occupants a healthy indoor environment. The relative humidity within a building's HVAC system must be kept sufficiently low to inhibit the growth of microorganisms that can cause disease and other health problems. And, in some parts of the country, electric utilities are having trouble serving their peak air conditioning loads.

While it is unlikely that a single cooling and dehumidification technology will emerge as the preferred alternative to today's CFC/HCFC systems in all applications, liquid desiccant air conditioners are unique in their ability to provide high efficiency cooling while addressing all of the proceeding problems.

2.0 The Operation of a Liquid-Desiccant Air Conditioner

A desiccant air conditioner can be viewed as an indirect evaporative cooler that has been modified to operate at humid outdoor conditions. This enhanced function comes at a price, however--thermal energy must be supplied to the system.

Compared to an indirect evaporative cooler, the desiccant air conditioner performs two additional processes: dehumidification of the process air and regeneration of the desiccant. Dehumidification is naturally provided by the desiccant, which by definition is a material that has a high affinity for water vapor. Regeneration is done by heating the desiccant to drive off the water that was absorbed in dehumidifying the process air.

When air is brought in contact with a liquid desiccant and the two components come to equilibrium, the partial pressure of the water vapor in the air will be a function of the temperature and concentration of the desiccant. This pressure is referred to as the desiccant's equilibrium

vapor pressure. If the system is perturbed, water will flow from the component with the higher characteristic vapor pressure, i.e., air will be dried if its partial pressure of water vapor is higher than the desiccant's equilibrium vapor pressure.

As a desiccant absorbs water, heat is released. The source of most of this heat is the latent heat of condensation for the water vapor, which is converting from a gaseous state to a condensed state on or in the desiccant. Additional heat is released because the water vapor is forming weak bonds with the desiccant. This heat is typically an order of magnitude less than the heat of condensation.

On a psychrometric chart, an adiabatic dehumidification process is essentially the opposite of direct evaporative cooling. As shown on Figure 1, humid air at ARI outdoor conditions (point A; 95°F/0.0142) emerges from an adiabatic desiccant absorber at lower humidity and higher temperature (point B; 111°F/0.0110). The process line A-B diverges slightly from a constant-enthalpy line on the psychrometric chart; the air at point B has a higher enthalpy due to the heat that is released and gained by the air as the water bonds with the desiccant.

A liquid desiccant of fixed concentration will be in equilibrium with air at roughly a constant relative humidity over a 70°F to 120°F range. For a 40% solution of lithium chloride by weight, this equilibrium relative humidity will be approximately 19%. Point B on Figure 1, which is at a 19% rh, is the state that air at ARI outdoor conditions will approach in an adiabatic liquid-desiccant absorber that operates with a 40% lithium chloride solution.

By analogy with adiabatic evaporative cooling--which to a close approximation will reduce the temperature of air towards its wet-bulb--air that is dried in an adiabatic liquid-desiccant absorber will approach its "brine bulb" temperature. This brine-bulb temperature is a unique function of the initial state of the air, the type of liquid desiccant and its concentration.

The brine-bulb temperature is the driving potential for heat exchange in a liquid-desiccant air conditioner. Since it can be much higher than the initial dry-bulb temperature of the air, the liquid-desiccant air conditioner will have several advantages over an indirect evaporative cooler. The most important of these are (1) its heat exchanger can be smaller and the volume of air processed can be less for the same cooling effect, and (2) it can provide cooling under conditions where the indirect evaporative cooler cannot operate.

A complete liquid-desiccant air conditioner is shown in Figure 2. The system has three major components: (1) an absorber, which dries and cools the process air, (2) a regenerator, which removes water from the weak desiccant leaving the absorber, and (3) an interchange heat exchanger, which recovers heat from the hot, concentrated desiccant leaving the regenerator for preheating the weak desiccant.

The simplest configuration for the liquid-desiccant absorber, which is the one shown in Figure 2, uses a spray tower filled with porous contact media for conditioning the process air and a separate desiccant cooler for rejecting heat to the ambient. The cool liquid desiccant is

sprayed over the porous bed--which is also referred to as a packed bed--within the absorber. As it trickles down it comes in contact with the upwardly flowing process air. The process air leaves the absorber drier and with a lower enthalpy. The warmer and weaker liquid desiccant in the sump is recirculated through the desiccant cooler, which in this figure is shown as a heat exchanger with cooling-tower water flowing through one side.

A small flow of desiccant is diverted to the regenerator so that water can be removed from the system. In Figure 2, the regenerator is also shown as a spray tower filled with contact media. Here, however, the desiccant is first heated before it is sprayed onto the packed bed. A scavenging air stream flows through the bed, picks up the excess water, and carries it out to ambient.

3.0 The Coefficient of Performance of a Liquid-Desiccant Air Conditioner

In very dry climates such as the southwestern U.S., the outdoor air can have a relative humidity and wet-bulb temperature that are sufficiently low to drive a liquid-desiccant air conditioner without additional thermal input. In this case, the thermal COP of the system is infinite (as it would be for an indirect evaporative cooler).

3.1 Regenerators for a Liquid-Desiccant Air Conditioner

The preceding situation, however, is very limited, and it provides little insight into the efficiency gains and limitations of a liquid-desiccant air conditioner. A more useful case is one in which the absorber provides only latent cooling (i.e., the dry-bulb temperature of the air leaving the absorber is the same as that entering) and the regenerator does not rely on the relative humidity of the ambient air. The simplest form of this regenerator would be an atmospheric-pressure boiler in which the steam that is produced is vented to the outside.

The ideal thermal COP of this liquid-desiccant air conditioner would be approximately one. This is because the cooling effect, which is the latent heat of condensation for the water that is removed from the process air, is essentially equal to the heat that must be supplied to remove the water from the desiccant. However, the COP of a practical system that uses lithium chloride would be closer to 0.57 at ARI conditions assuming a 72% effective interchange heat exchanger, an 80% efficient natural-gas burner firing an atmospheric-pressure boiler, a 38% absorber spray concentration and a 4 percentage point concentration difference between the weak and strong desiccant streams into and out of the boiler.

The burner flue losses and the energy needed to heat the desiccant up to the operating temperature of the boiler are the two major effects that degrade the COP. Although both can be reduced by using more efficient components, cost presents a practical limit to this approach.

A moderate improvement in COP, on the order of 25%, can be achieved by reducing the flow rate of desiccant that is exchanged between the absorber and the regenerator. The advanced absorbers described in Section 3.2 exploit this effect.

A much more dramatic improvement in COP can be achieved if the energy in the steam that leaves the regenerator/boiler can be used to regenerate additional desiccant. This is the approach taken in regenerators that use either a multiple-effect boiler or a vapor-compression distillation (VCD) system.

As shown in Figure 3, a double-effect boiler has a low and a high pressure vessel. Thermal energy from the primary fuel heats only the desiccant in the high-pressure stage, driving off water as superheated steam. This steam flows to a heat exchanger that is in contact with the desiccant in the low-pressure stage. Since the saturation temperature of the high-pressure steam is higher than the boiling point of the desiccant in the low-pressure stage, the steam will condense, its latent heat becoming the thermal energy for boiling desiccant in the low-pressure stage.

A lithium-chloride air conditioner that has a COP of 0.61 with a boiler that operates at a 100°F steam saturation temperature will have a COP of 1.09 with a double-effect boiler. Triple-effect and higher boilers are possible in theory, but each additional effect must operate at a significantly higher temperature. If one could design a reliable triple-effect boiler for this system, its COP would increase to 1.36.

The temperature rise associated with each additional effect is comparable to the boiling point elevation of the desiccant. As an example, a 40% lithium chloride solution will boil under atmospheric pressure at 278°F. Since the atmospheric-pressure steam that evolves has a saturation temperature of 212°F, the solutions boiling point elevation is 66°F. If one starts with 85°F water from a cooling tower as a heat sink and allows a 15°F temperature drop across each condenser that transfers heat to the next lower stage, then a double-effect boiler working with 40% lithium chloride will operate at 247°F; and, the third stage of a triple-effect boiler will operate at 328°F. (For comparison, a 62% lithium bromide solution, which could be used in an absorption chiller, has a 110°F boiling point elevation. A double-effect boiler for this solution would operate at over 300°F.)

A second approach to recovering the latent energy in the steam from a boiler/regenerator is to use vapor-compression distillation (VCD)--a technology that is used in water desalination. In a VCD regenerator, steam from a boiler is mechanically compressed so that its saturation pressure is higher than the boiling point of the desiccant in the boiler. Once again, the latent heat of the steam can be used to boil additional desiccant by condensing the steam in a heat exchanger that is in contact with the desiccant.

A VCD regenerator would be most attractive for a natural-gas liquid-desiccant air conditioner. For this system, a natural-gas engine would drive the compressor, and waste heat from the engine would be used by the boiler. The liquid-desiccant air conditioner that was just studied with the multiple-effect regenerator would have an ARI COP of 1.32 with a VCD regenerator.

Advanced regenerators for liquid-desiccant air conditioners are discussed in more detail in Reference 1.

3.2 Absorbers for a Liquid-Desiccant Air Conditioner

The absorber shown in Figure 2 cools the desiccant before it comes in contact with the process air. In this approach the flow of desiccant must be sufficiently high to prevent the desiccant's temperature from rising too quickly towards the brine-bulb temperature, since this would greatly limit dehumidification within the absorber. Desiccant flow rates on the order of 0.5 to 1.0 gpm per 100 cfm of air are typical in packed-bed absorbers.

A second type of absorber combines cooling and dehumidification within the absorber bed. In this internally-cooled absorber, the contact media over which the desiccant and process air flow is the surface of a heat exchanger that has coolant flowing within it. Although refrigerant from an electric vapor-compression system can be used to cool this absorber[2], a liquid-desiccant air conditioner driven almost totally by thermal sources would use either chilled water from a cooling tower or evaporatively cooled air.

An internally-cooled absorber that uses evaporatively cooled air is shown in Figure 4. This absorber is similar to a parallel-plate heat exchanger. Process air flows through one set of passages where it comes in contact with liquid desiccant that is flowing down the heat exchanger's walls. The heat that is released as the air is dried is transferred directly across the walls to the cooling air. On the cooling side, water is sprayed or dripped onto the walls so that the cooling air is maintained at close to the wet-bulb temperature.

A significant advantage of the internally-cooled absorber is that it no longer relies on the "thermal inertia" of the desiccant flow to keep the desiccant cool. In principle, desiccant flows can be more than an order of magnitude less than those now used in packed-bed absorbers. This will permit the absorber to operate with a significant desiccant concentration change across it. Whereas the desiccant flowing through a packed-bed absorber will change concentration by less than 1 point, the concentration change for an internally-cooled absorber with reduced desiccant flow will be between 3 and 6 points.

This larger concentration change can be exploited to improve the COP of the liquid-desiccant air conditioner. As noted earlier, the energy needed to preheat the weak desiccant up to the temperature of the regenerator is one of two major losses for the system; it typically will be 30% of the energy needed to regenerate the desiccant in an atmospheric-pressure single-effect boiler. This loss can be reduced by decreasing the flow of desiccant to the regenerator.

But, the amount of water removed by the regenerator is proportional to both the flow of desiccant and the difference in concentration between the weak and strong streams. Since the regenerator's water removal rate must equal the water gained in the absorber, a decrease in the desiccant flow to the regenerator is permitted only if the concentration difference between the weak and strong streams increases. This can happen if the very weak desiccant leaving an internally-cooled absorber is sent to the regenerator. The resulting improvement in COP can

be between 25% and 35%. Reference 3 describes advanced liquid-desiccant absorbers in more detail.

4.0 Benefits of Liquid-Desiccant Air Conditioners

The liquid-desiccant air conditioner is unique among alternative air cooling technologies in that it addresses all six of the critical issues noted in the Introduction.

4.1 Conservation of Energy Resources and Low CO_2 Emissions

With advanced regenerators and absorbers, a liquid-desiccant air conditioner can have an ARI COP of between 1.3 and 1.7.

Furthermore, the seasonal COP of a liquid-desiccant air conditioner can be still higher. The preceding COPs are for ARI conditions which have a 75°F outdoor wet-bulb temperature. However, like all evaporative cooling systems, the performance of a liquid-desiccant air conditioner will improve as the outdoor wet-bulb temperature decreases.

Figure 5 shows the performance of a liquid-desiccant air conditioner with an internally-cooled absorber and a double-effect regenerator at different outdoor wet-bulb temperatures. The curve labeled "38% spray" is the system's performance when the spray concentration in the absorber is fixed at this concentration. A modest improvement in COP occurs at lower wet-bulb temperatures as a greater fraction of the absorber's total cooling is sensible.

When the absorber's spray concentration is fixed at 38%, the liquid-desiccant air conditioner will provide cooling at a "design" rate of 400 cfm/ton when the outdoor wet-bulb temperature is about 75°F. At lower outdoor wet-bulb temperatures, the cooling rate of the liquid-desiccant air conditioner goes up if the absorber spray concentration is fixed at 38%. Since the building's cooling loads are going down, the liquid-desiccant air conditioner must be cycled on and off so that the total cooling it delivers matches the loads on the building.

However, rather then cycle the liquid-desiccant air conditioner, its cooling output can be modulated by changing the absorber's desiccant spray concentration. Since the fraction of cooling that is sensible goes up as the spray concentration goes down, less water is absorbed per ton of total cooling. This increases the COP of the liquid-desiccant air conditioner.

Furthermore, the operating temperature of the regenerator decreases as the desiccant's concentration decreases. This further improves the efficiency of the regenerator by reducing the energy needed for preheating.

These effects produce the efficiency improvement shown in Figure 5 by the curve labeled "400 cfm/ton". This curve plots the COP of a liquid-desiccant air conditioner that weakens the absorber spray concentration at lower outdoor wet-bulb temperatures so that cooling is provided at 400 cfm per ton.

Also shown on Figure 5 are the cooling loads for an office building in Atlanta that have been aggregated in 3°F wet-bulb bins. Even in a moderately humid location such as Atlanta, an appreciable fraction of a building's cooling load will occur at outdoor wet-bulb temperatures at which the liquid-desiccant air conditioner is getting a boost in performance.

If one assumes that the absorber's spray concentration can be adjusted within the limits of 20% and 40% for lithium chloride so that the cooling provided by the liquid-desiccant air conditioner equals 400 cfm/ton while processing ARI indoor air, the seasonal COP of the unit compared to its ARI COP will be:

	ARI	Seasonal
Single-Effect Boiler	0.69	0.79
Double-Effect Boiler	1.09	1.48
Triple-Effect Boiler	1.36	1.86
VCD Regenerator	1.32	2.00

(All systems in this table use a relatively high absorber spray rate--0.5 gpm per 100 cfm of process air--and all except the VCD regenerator operate their condensers at 100°F.)

These high seasonal COPs, which result from increased evaporative cooling at low wet-bulb temperatures, make the liquid-desiccant air conditioner an excellent non-CFC/HCFC cooling system for both conserving energy and reducing CO_2 emissions[a].

4.2 Conditioning Ventilation Air and Maintaining Low Relative Humidities within the HVAC System

All cooling technologies except desiccant systems dry air by cooling it to below its dew point. The large change in dry-bulb temperature that accompanies this process means that most of the cooling--between 65% and 80%--will be sensible. However, ventilation will impose much larger latent loads on the building; at ARI outdoor conditions, approximately 50% of the ventilation load will be latent. If an air conditioner that dehumidifies air by cooling it to below its dew point is to meet the larger latent loads (and many do not), it must either reheat the air, which is inefficient--or use an air-to-air heat exchanger--which increases the system's cost and complexity and also reduces its efficiency[b].

Desiccant systems, on the other hand, can deliver 100% of their cooling as latent. If the loads on the building are such that a smaller percentage of latent cooling is needed, the supply air can be cooled in a direct evaporative cooler, which "trades" latent for sensible cooling. In fact

---

[a] It should be noted that other cooling systems can boost their seasonal COPs by adding an evaporative cooling system. However, this significantly increases their cost and complexity.

[b] The air-to-air heat exchanger precools the air entering the conditioner with air that is leaving. This increases the latent cooling, but lowers the evaporator temperature of the conditioner.

by modulating the direct evaporative cooler, the liquid-desiccant air conditioner can **independently** control the temperature and humidity in the building.

Furthermore, by keeping the process air well above its dew point, a desiccant air conditioner can avoid the high relative humidity conditions within the HVAC system that can present health and maintenance problems. A desiccant air conditioner can deliver air well below a 70% relative humidity--a value commonly used as the threshold for mold and mildew growth.

5.0 Applications for a Liquid-Desiccant Air Conditioner

A liquid-desiccant air conditioner has the potential to broadly compete with electric vapor-compression equipment in almost all comfort conditioning applications. However, as with any new technology, it is most likely to first succeed in applications were it has a unique advantage. This would include (1) buildings with very large latent loads such as those requiring large amounts of ventilation or with large internal latent loads, (2) buildings that must maintain low humidities, (3) applications that have low outdoor wet-bulb temperatures but indirect evaporative coolers do not perform acceptably, (4) buildings that require additional cooling capacity but cannot add electric air conditioners or chillers, (5) applications where independent control of temperature and humidity are needed, and (6) applications where inexpensive low-grade heat is available.

In the last ten years, poor indoor air quality has become a major problem. Its source is inadequate ventilation, partly caused by the need to conserve energy. Now, however, as a result of ASHRAE standard 62-89, recommended minimum ventilation rates have approximately tripled. Since much of this increased ventilation load is latent, it can be effectively served by liquid-desiccant air conditioners.

A second major problem now facing the HVAC industry is the loss in cooling capacity that will accompany the conversion of CFC and HCFC chillers and air conditioners to alternative refrigerants. For some buildings, it may not be possible to install additional electric cooling capacity. In these cases, liquid-desiccant air conditioners offer an effective means of making up the cooling deficit. Even in buildings where electric cooling can be added, a more effective approach may be to use the existing cooling system to condition only the recirculation air and condition the ventilation air with a liquid-desiccant air conditioner. Reference 4 discusses in more detail the potential for liquid-desiccant air conditioners to address both the indoor air quality and CFC-conversion issues.

Regions of the country with low outdoor wet-bulb temperatures are excellent markets for a first-generation liquid-desiccant air conditioner. Here, the liquid-desiccant air conditioner will have a very high seasonal COP, possibly over 2.0 for a unit with a double-effect regenerator.

Although indirect evaporative coolers can also effectively compete in this market, their applicability is more limited since they do not provide sufficient cooling at moderate wet-bulb temper-

atures. They also cannot effectively meet high latent loads as can the liquid-desiccant air conditioner.

Other important early applications for both solid and liquid-desiccant systems are:

- Supermarkets, where much of the building's sensible cooling is provided by the refrigerated display cases, leaving a large latent load that must be served, and

- Hotels, health clubs and swimming pools, which can all have high indoor humidity levels that lead to significant property damage from mold and mildew.

Finally, a liquid-desiccant air conditioner is an excellent candidate for a cooling system that can be driven by a relatively low-temperature energy source such as solar energy. In the solar application, the regenerator for the liquid-desiccant air conditioner can be designed to operate at a very low temperature, less than 180°F, using relatively inexpensive collectors. As demonstrated by Arizona State University, the regenerator and collector could be integrated into a single component[5].

A liquid-desiccant air conditioner will have an advantage over a solid-desiccant unit when operating from a low-temperature energy source. This is due to the fact that moisture sorption occurs at much lower temperatures in the liquid system.

An important difference between a solid and liquid-desiccant system is that there is no means for cooling the solid desiccant during absorption. Whereas absorption may occur at around 80°F in an internally-cooled liquid-desiccant absorber, it will occur at between 115°F and 125°F in a solid-desiccant wheel. At 80°F, a 40% lithium chloride solution will dry air to a 0.004 humidity ratio, which corresponds to a 19% relative humidity. At 120°F, the same 0.004 humidity ratio correspond to a 5.5% relative humidity. Recalling that regeneration air must have a relative humidity that is lower than the equilibrium value for the desiccant, air with a fixed humidity ratio must be significantly hotter to remove water from the solid desiccant.

6.0 Technical Issues

Several important technical problems must be solved before a competitive liquid-desiccant air conditioner can be brought to market. These are:

- Unless the liquid-desiccant air conditioner is to be limited to markets that have outdoor wet-bulb temperatures below 75°F, a way must be found of increasing cooling capacity at these more humid outdoor conditions,

- A low-cost, reliable internally-cooled absorber must be developed.

- Either a non-corrosive alternative to lithium chloride must be found, or the liquid-desiccant air conditioner must be designed so that no desiccant escapes with the process air and it can be safely operated and maintained.

- A high efficiency regenerator must be developed.

- The ability of a liquid-desiccant air conditioner to exploit low outdoor wet-bulb temperatures by adjusting the desiccant's concentration must be demonstrated.

6.1 Operation at High Outdoor Wet-Bulb Temperatures

A liquid-desiccant air conditioner that uses a lithium-chloride solution will have trouble meeting the load on a building at outdoor wet-bulb temperatures above 75°F if it is limited to 400 cfm of process air per ton of cooling. This limitation is explained by the processes shown on the psychrometric chart in Figure 1. One ton of cooling is provided by reducing the enthalpy of air from its initial value at Point C (78°F, 0.0103) to a point on the line D-D'. Since a 40% lithium-chloride solution--which is close to the maximum concentration for the absorber--will dry air to 19% rh, the absorber must operate below 79°F if it is to deliver air on the line B-B'. Obviously, the outdoor wet-bulb temperature must be several degrees below this value to maintain the desired absorber temperature.

A liquid desiccant that can dry air more deeply than lithium chloride would extend the operating range of the air conditioner. Lithium bromide could operate in the absorber at a concentration that would dry air to 7.5% rh. This would add about 9°F to the upper wet-bulb temperature limit. Unfortunately, the bromide ion is more easily oxidized than the chloride ion in slightly acidic solutions, which in some applications may cause problems in an "open" liquid-desiccant air conditioner.

A second approach to increasing the capacity of the liquid-desiccant air conditioner at high outdoor wet-bulb temperatures is to modify the basic system configuration. An example of this approach is the Dunkle cycle which uses the low wet-bulb-temperature return air from the building to cool the dehumidified air leaving the absorber. This configuration is shown in Figure 6. It can provide a very large cooling effect, but it is more complicated and will have a lower COP.

6.2 The Development of an Internally-Cooled Absorber

Although a liquid-desiccant air conditioner can be designed with a packed-bed absorber, its cost will be lower and its performance will be better with an internally-cooled absorber. Several research groups have tried to develop a low-cost reliable internally-cooled absorber[6,7,8]. Models with both plastic and coated aluminum plates have been built. Unfortunately, none of the models could effectively isolate the desiccant and cooling water. The successful development of an internally-cooled absorber is critical to the commercialization of a small to mid-sized packaged liquid-desiccant air conditioner.

6.3 A Non-Corrosive Liquid Desiccant

The examples presented here have all used lithium chloride as the liquid desiccant. This is the most common solution now used in industrial liquid-desiccant dehumidification systems. Although at high concentrations lithium chloride solutions are very corrosive, both the system designs and operating and maintenance procedures in these industrial applications are effective at minimizing any problems that this might cause.

The next most common liquid desiccant for industrial dehumidifiers is glycol, either triethylene or propylene. Glycol has the advantage of being much less corrosive. However, glycol itself has a significant vapor pressure[c]. This presents a problem in HVAC applications since small amounts of glycol will always be introduced into the conditioned air. Also, the regenerator for glycol must be similar to a reflux boiler if there is to be very low levels of glycol in the water that leaves it. This probably eliminates the use of high-efficiency regeneration techniques.

Although the commercialization of a liquid-desiccant air conditioner would be less risky if a suitable non-corrosive liquid desiccant were developed, lithium chloride is still a viable candidate. The system must be designed to both resist corrosion and prevent lithium chloride from escaping into the conditioned air. Furthermore, the operation and maintenance of the system must not present a hazard to personnel. As noted above, industrial equipment and their O&M procedures already satisfy these requirements. Similar controls must be implemented in the HVAC environment.

6.4 The Control Over Desiccant Concentration

In Section 4.1, a liquid-desiccant air conditioner was reported to have a seasonal COP in Atlanta that is 1.35 times greater than its ARI value. This attractive characteristic resulted from the system's ability to exploit evaporative cooling while still serving the building's latent load.

The high seasonal COP for the liquid-desiccant air conditioner is achieved by maintaining the concentration of the desiccant at the lowest value that still meets the load on the building. This mode of operation in which the desiccant's concentration swings over a wide range is not used in industrial systems. A practical system that can accomplish this must be developed and demonstrated.

6.5 A High-Efficiency Regenerator

All regenerators for industrial liquid-desiccant dehumidifiers are either simple boilers or packed-bed devices. If the liquid-desiccant air conditioner is to achieve an ARI COP that exceeds 1.0, more efficient regenerators must be developed.

---

[c] The vapor in equilibrium with a glycol/water mixture will contain a significant amount of glycol. For a water/lithium-chloride mixture, the vapor will be essentially 100% water.

Although high-efficiency separation technologies are common in other technologies, the operating requirements for the liquid-desiccant air conditioner are significantly different. As an example, the double-effect regenerators that are now used on absorption chillers do handle a corrosive liquid--lithium bromide--but in an oxygen-free environment. Their designs are not directly transferrable to a liquid-desiccant air conditioner since the desiccant will be saturated with oxygen and, therefore, is more corrosive.

Similarly, a VCD regenerator for a 40% lithium chloride solution that has a 66°F boiling point elevation will be very different than the ones now used for desalinating salt water, which has less than a 2°F boiling point elevation.

7.0 The Economics of a Liquid-Desiccant Air Conditioner

It is very difficult to project either the manufacturing cost or selling price for a liquid-desiccant air conditioner. A manufacturable prototype has not yet been designed or built, and no studies have been published of potential sales volumes.

If one extrapolates industrial experience, the selling price for a liquid-desiccant air conditioner would be very high--between $2,000 to $3,000 per ton. However, this comparison is not fair since industrial equipment is both built and marketed very differently than HVAC equipment.

Several observations can be made, however, that should help bound the cost of the liquid-desiccant air conditioner. First, a liquid-desiccant system that directly cools air should have a lower cost than an absorption chiller. Both systems use a high-efficiency double-effect regenerator. Although the regenerator for the absorption chiller is not exposed to oxygen, it must operate at a higher temperature, typically 20°F to 30°F higher. Manufacturing costs for the regenerator should then be comparable for the two systems.

Both systems also use an interchange heat exchanger and a solution recirculation pump. These, again, should cost about the same.

Although the costs for the preceding components will be comparable, the liquid-desiccant air conditioner will have a significant advantage for the sub-system that conditions the air.

An internally-cooled absorber for a 25 ton liquid-desiccant air conditioner will be composed of approximately 855 plastic plates, each plate being 3'x 3' and about 10 mil thick. For plates made of polypropylene, their total weight will be 360 pounds and their raw material cost will be $640. The absorber also needs a water and a desiccant distribution system.

The preceding 25-ton absorber for the liquid-desiccant air conditioner would replace the following components in an absorption chiller:

Component	Material	Area	Weight	Cost
absorber	copper	150 ft^2	300 lb	$560
evaporator	copper	100 ft^2	200 lb	$375
cooling tower	packing	3,130 ft^2	130 lb	$230
finned-tube coils[d]	Cu/Al	2,200 ft^2	240 lb	$390
		Total	870 lb	$1,555

where the data in this table apply only to the heat transfer surface area.

The absorption chiller also needs a solution distribution system and purge system, and the cooling tower needs a water distribution system.

Although both the liquid-desiccant air conditioner's absorber and the absorption chiller's absorber/evaporator/cooling-tower require many more components than are shown above, the liquid-desiccant absorber will have an appreciably lower weight and cost.

The liquid-desiccant air conditioner will also have lower operating costs than the absorption chiller. At ARI conditions, both systems using double-effect regenerators will have COPs on the order of one. However, the liquid-desiccant system can take better advantage of evaporative cooling at low outdoor wet-bulb temperatures. This should give it a 35% higher seasonal COP in a moderately humid climate. This advantage increases in drier climates.[e]

8.0 Technology Outlook

Two manufacturers are now selling liquid-desiccant dehumidification equipment, mostly for industrial applications. Several hundred buildings, many of them hospitals, use liquid desiccants in large, engineered HVAC systems[9]. One manufacturer, Albers Air Conditioning Corp., displayed a prototype of a 3-ton residential liquid-desiccant air conditioner at the 1993 ASHRAE winter meeting, but the cost of the system was not disclosed[10]. There is also little information available on this system's performance, so its operating costs and its capacity in high wet-bulb temperature climates cannot be assessed.

The high-efficiency liquid-desiccant air conditioner that has been described here is not now a commercial product. Three research projects sponsored by GRI have attempted to develop both internally-cooled absorbers and simple boiler regenerators[6,7,8]. Although these projects did have limited success, they did not produce a commercial product.

---

[d] The finned-tube coils are not part of the absorption chiller. They are, however, needed if the chiller is to supply conditioned air to the building.

[e] The absorption chiller could also increase its seasonal COP by adding an indirect evaporative cooler. However, the cost of this additional component must then be added to the cooling system's cost.

As described in Section 6, several technical problems must be solved before the feasibility of a liquid-desiccant air conditioner that can achieve a seasonal COP of between 1.5 and 2.0 using natural gas or 0.8 and 1.5 using solar energy is proven. However, these problems appear amenable to straightforward engineering solutions, with no "breakthroughs" required to meet the cost and performance goals of a commercial system.

Unfortunately, only a minimal amount of R&D resources is now being invested in liquid-desiccant air conditioners. Unless this changes, the advantages offered by this technology will most likely not be realized.

9.0 References

1. Lowenstein, A.I. and Dean, M.H., "The Effect of Regenerator Performance on a Liquid Desiccant Air Conditioner," ASHRAE Trans., V.98, Pt. 1, 1992.

2. Howell, J.R. and Peterson, J.L., "Preliminary Performance Evaluation of a Hybrid Vapor-Compression/Liquid Desiccant Air Conditioning System," ASME Paper No. 86-WA/Sol-9, Winter Annual Meeting, 1986.

3. Lowenstein, A.I. and Gabruk, R.S., "The Effect of Absorber Design on the Performance of a Liquid-Desiccant Air Conditioner," ASHRAE Trans., Vol. 98, Pt. 1, 1992.

4. Meckler, G., "Integrated IAQ-CFC Retrofit Saves Energy," *Consulting-Specifying Engineer*, p. 42, March 1993.

5. Hawlader, M.N.A., Novak, K.S. and Wood, B.D., "Unglazed Collector/Regenerator Performance for a Solar Assisted Open Cycle Absorption Cooling System," *Solar Energy*, Vol.50, No.1, January 1993.

6. Lowenstein, A.I., et al., "Integrated Gas-Fired Desiccant Dehumidification Vapor Compression Cooling System for Residential Application," Final Report, GRI-88/0326, November 1988.

7. Feldman, S. and Bacchus, R., "Integrated Gas-Fired Desiccant Dehumidification Vapor Compression Cooling System for Residential Applications," Phase III report, GRI-92-0304, 1992.

8. Griffiths, W.C. and Cohen, B., "Integrated Commercial Rooftop Cooling System," GRI90-0192, March 1992.

9. Conversation with Mr. William Griffiths, Chief Engineer, Kathabar Division of Somerset Technologies, Somerset, NJ.

10. Albers, W.F., et al., "Ambient Pressure, Liquid Desiccant Air Conditioner," ASHRAE Trans., Vol.97, Pt.2, 1991.

Figure 1 - Psychrometric Representation of Liquid-Desiccant Processes

Figure 2 - Generic Liquid-Desiccant Air Conditioner

Figure 3 - Double-Effect Desiccant Boiler

Figure 4 - Internally Cooled Liquid-Desiccant Absorber

Figure 5 - The Performance of a Liquid-Desiccant AC as Function of Wet-Bulb Temperature

Figure 6 - Liquid-Desiccant AC in Dunkle Cycle

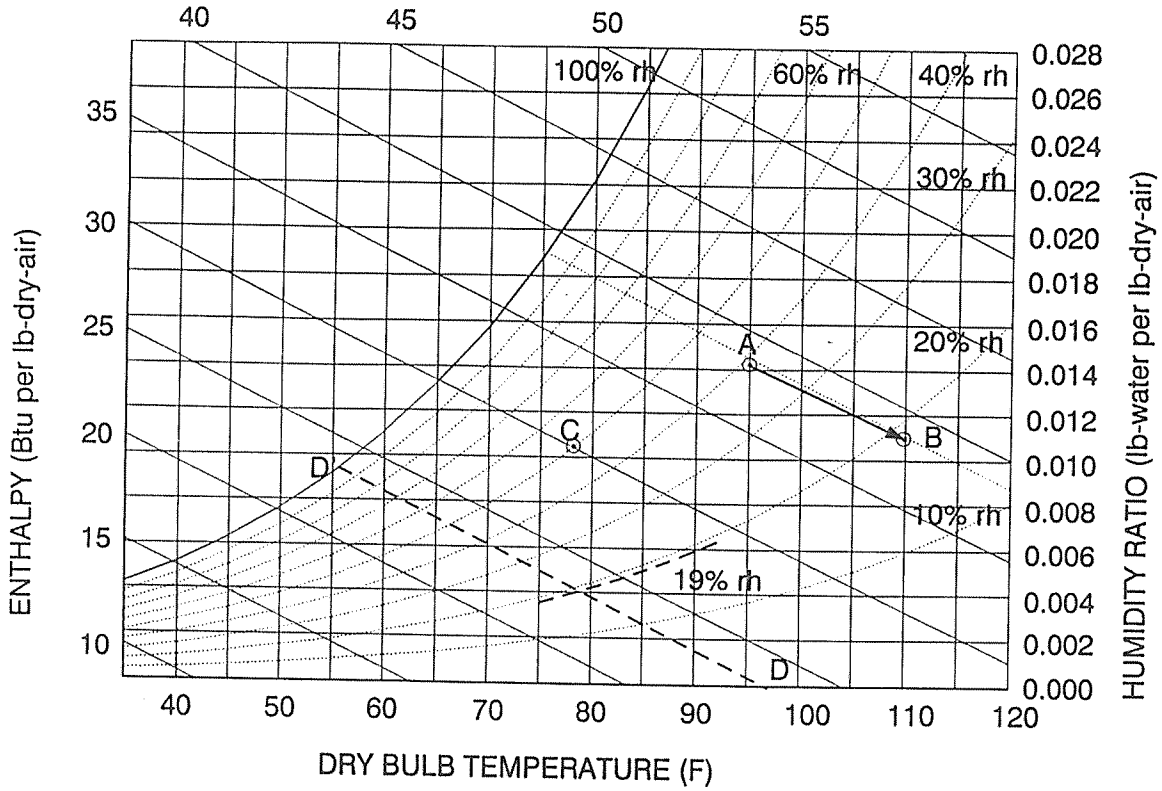

Figure 1 - Psychrometric Representation of Liquid-Desiccant Processes

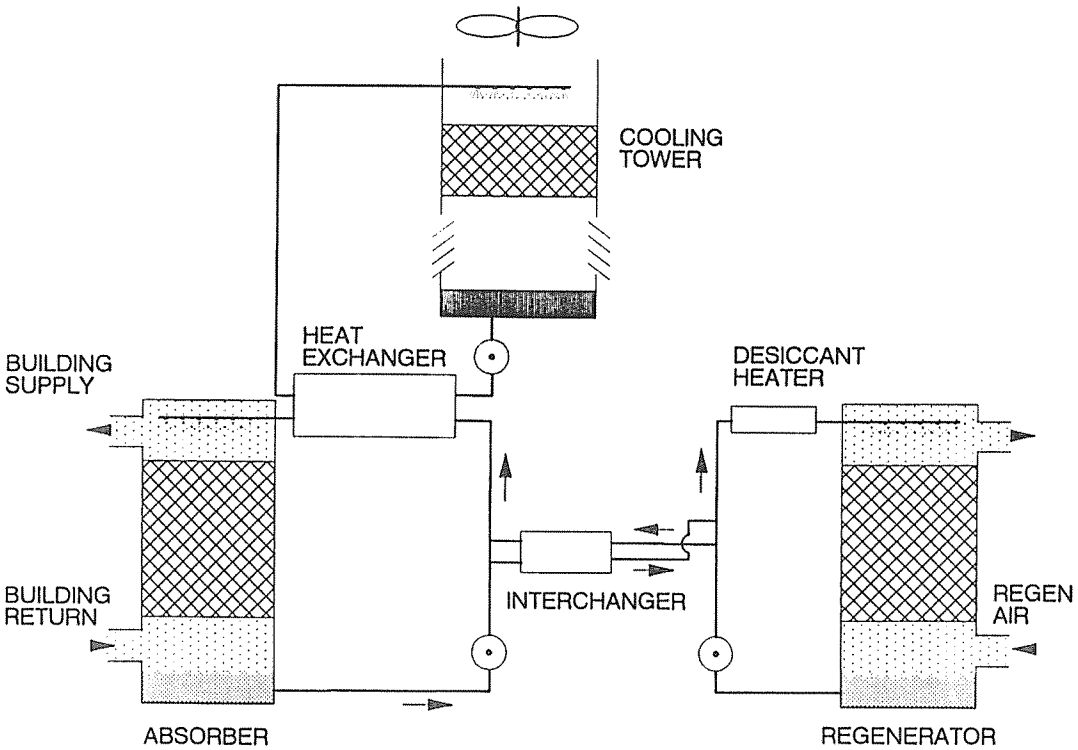

Figure 2 - Generic Liquid-Desiccant Air Conditioner

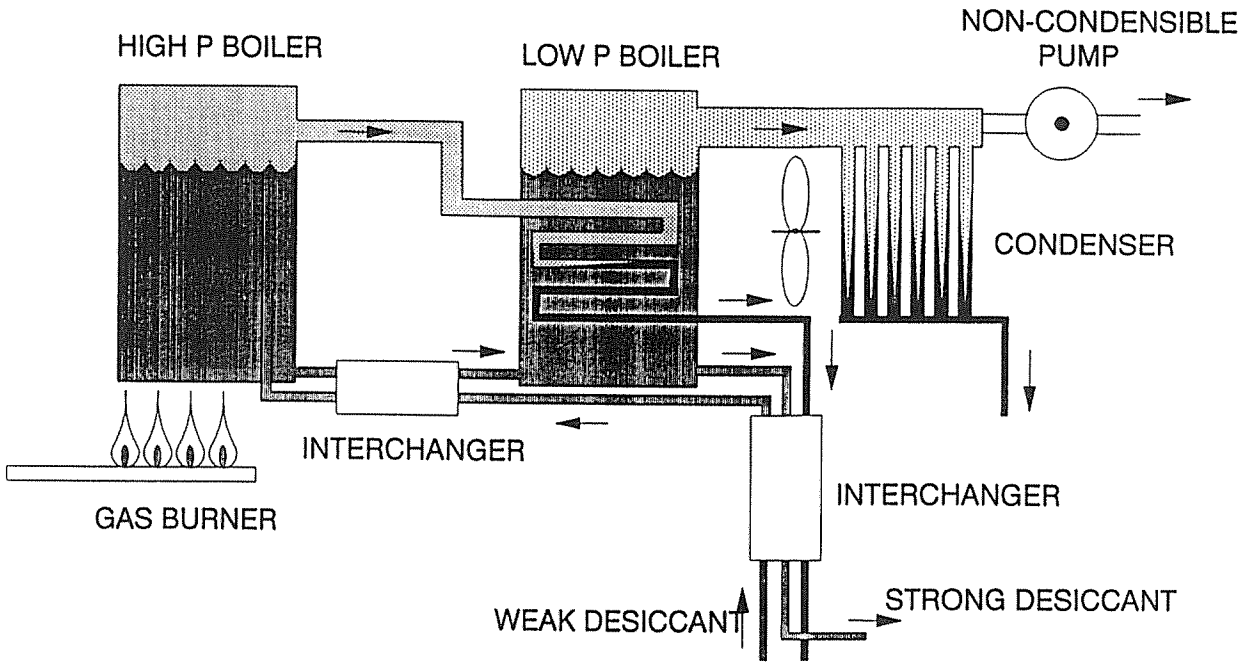

Figure 3 - Double-Effect Desiccant Boiler

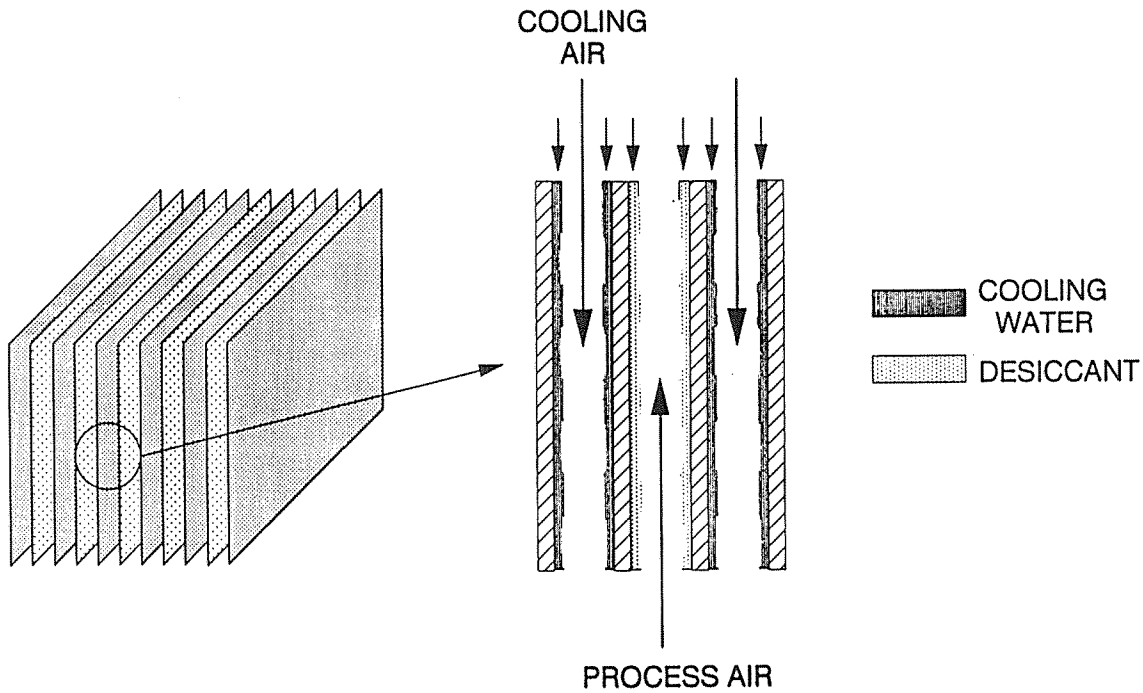

Figure 4 - Internally Cooled Liquid-Desiccant Absorber

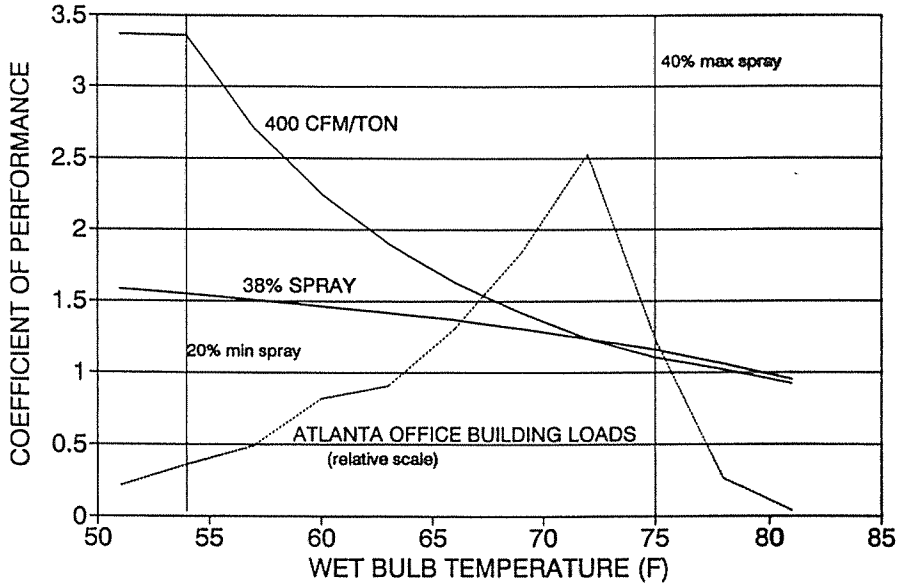

Figure 5 - The Performance of a Liquid-Desiccant AC as Function of Wet-Bulb Temperature

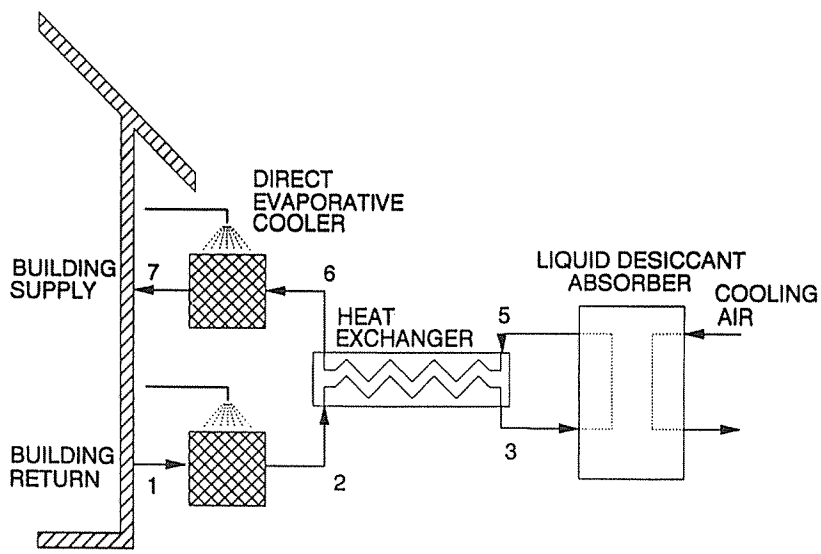

Figure 6 - Liquid-Desiccant AC in Dunkle Cycle

DEVELOPMENT OF DESICCANT COOLING SYSTEMS UTILIZING LOW TEMPERATURE REGENERATION

J. A. Coellner
ICC Technologies Corporation

INTRODUCTION

ICC Technologies has developed a desiccant based cooling system which promises to overcome the capacity, efficiency, and cost barriers which have overwhelmed previous projects. The system utilizes the classic Munters Environmental Control (MEC) component arrangement. A recirculation rather than a ventilation operating mode is presented as the primary configuration. The success of the design rests on the ability of the desiccant rotor to provide low dewpoint air when regenerated at low temperature, the effectiveness of the regenerative heat exchanger, and the integrity of construction.

ICC has entered a Joint Development Agreement with Engelhard Corporation to utilize Engelhard's ETS zeolite in a desiccant rotor. Engelhard has developed a family of large pored titanium silicate molecular sieves. These octahedral zeolites exhibit properties which are markedly different from tetrahedral aluminosilicate zeolites providing the opportunity to develop a viable desiccant cooling system on a new basis.

The working arrangement between the two companies is based on areas of expertise. Engelhard developed modified versions of ETS-10 to meet performance requirements set by ICC. ICC develops rotor substrates to meet mass transfer requirements. The coating of the ETS-10 onto selected substrates has been a joint effort utilizing the coating chemistry from Engelhard with process engineering support from ICC. ICC has been responsible for the evaluation of the coated desiccant substrates. The evaluation methodology has been centered on dynamic testing of prototype wheels at rating point conditions. In an eighteen month period more than 100 wheels have been fabricated, tested, and evaluated.

The goals of the Joint Development Project have been to create desiccant materials and rotors with capacities sufficient to allow for a desiccant cooling device which meets the capacity levels of conventional cooling equipment, to assemble systems which demonstrate the attainment of that performance level, and to fabricate and install prototype systems for field demonstration. The first system configuration is a natural gas fired version with a rating point thermal COP goal of 0.70. The second is an "all electric" system utilizing a refrigerant heat pump cycle as a regeneration heat source. The performance target of this version is a rating point EER of 18.0.

Component development has been concurrent with desiccant subsystem work. The major effort has been on high effectiveness rotary regenerative heat exchangers. This has been successful with the attainment of an effectiveness of 0.90+ at equal mass flow rates and relatively high fluid velocities. Acceptable sealing systems for the rotary devices are in prototype production and high performance evaporative cooler designs have been successfully tested. Bench scale systems have met measured design goals for the first system configuration. Full size prototypes are now under test at ICC's facility.

DESICCANT CHARACTERIZATION

The synthesis of Large-Pored Crystalline Titanium Molecular Sieve Zeolites is described in U.S. Patent Number 4,853,202 issued to Steven M. Kuznicki and assigned to Engelhard Corporation. The material is substantively different from common aluminosilicate zeolites and other adsorbents in the degree of temperature dependence of the sorption characteristics. For virtually all adsorbents now used to extract water vapor from air, the temperature dependence of the material isotherms is very small. This has led to the assumption that adsorbents are, in fact, temperature independent. Investigation of empirical data indicates that such an assumption may not be appropriate. As shown in the accompanying figure, ETS exhibits very large differences in isotherms for relatively small differences in temperature. At certain points in the adsorption regimes of lower temperatures, the shape of the isotherms clearly resembles that of type 1M. This isotherm difference, induced by temperature, can be utilized to improve regeneration rates and limits at greatly reduced temperatures. Engelhard has demonstrated an ability to modify the temperature based sorption characteristics to improve both the sorption characteristics and to change the optimal desorption temperature. Work in this area was originally targeted to a regeneration regime of 180F for a gas based product and has begun on 140F for an electric version. Typical isotherms are shown for each.

A second important, but less discussed, feature of ETS is the so called heat of sorption. Accepting the common nomenclature with the understanding that it is a measure of the thermal energy transfer per unit mass required for a sorbate to sorb or desorbed, typical zeolites will have sorption heats in the range of 120 to 300 percent of the latent heat of vaporization of water. Values measured for the ETS versions approach latent heat values. The amount of energy required to affect desorption has a significant impact on the ultimate efficiency of the cooling system.

The capacity swing of the ETS desiccant is moderate. The mass ratio of water vapor to dry desiccant can change by 0.15 to 0.25 from adsorption to desorption. These values are similar to those for zeolites now used at high regeneration temperatures. The degree to which the value of capacity swing limits the capacity of a regenerative mass transfer device vary with the isotherm characteristics of the sorbent. The importance is more significant with a linear isotherm such as that of silica gel than with an isotherm as shown by ETS. Optimization of this characteristic in ETS is underway.

DESICCANT ROTOR DEVELOPMENT

ICC Technologies has developed a mass transfer modeling technique derived from a heat transfer analogy. U.S. Patent Number 5,148,374, assigned to ICC, describes the governing parameters and the means to utilize them in the design of a sorbent system. Independent of the particular desiccant employed, the critical variable is the Number of Mass Transfer Units (MTU). This value is dependent on the passage geometry of the rotor, carrier fluid characteristics, mass velocity, and sorbate concentrations. Using this methodology, rotor construction alternatives were evaluated. The evaluation was predicated by a constraint that, in the schedule available, only currently available and currently low cost fabrication techniques could be employed. It is interesting to note that the optimum geometry is a parallel passage configuration, but that the difficulties of fabrication precluded any further investigation. Ultimately a spiral wound rotor utilizing a corrugated stock was chosen. The geometry of the corrugations was selectable and varied over a range.

Rotors were fabricated by ICC with coatings applied at an Engelhard facility. More than 100 12 inch diameter rotors were produced over the past 18 months. These test wheels varied primarily on the following bases; substrate material, passage geometry, ETS type, coating technique, and volumetric desiccant loading. These wheel were tested at ICC. The performance evaluation was most focused on the ARI "A" rating point. This meant that the regeneration air was set to a humidity level of 120 to 130 grains of moisture per pound of dry air as would be expected from an evaporatively cooled ambient air stream. The performance curves shown result from data taken at that regeneration humidity level with inlet air humidity varied and inlet air temperature fixed at 80F as defined by the rating point.

Published data for desiccant wheels utilizing Lithium Chloride and silica gel show significantly higher outlet moisture levels at the rating point inlet of 80F, 78gr/lb. Regeneration temperatures of 250 to 300F and nominal face velocities of 300 feet per minute as well as much deeper wheels are required for minimum humidity levels. ETS wheels at higher velocities and low flow lengths have produced humidity levels 50 percent lower with 180F regeneration temperatures.

To achieve adequate capacity and efficiency to compete with current cooling products, the other major components utilized in the desiccant cooling system must achieve high effectiveness levels. The most important of these is the regenerative heat exchanger. Current state of the art heat exchangers seldom exceed 0.82 effectiveness values at equal flow rates. ICC has succeeded in achieving 0.90 by developing a device with minimal longitudinal heat transfer.

Commercially available cooling tower fill was employed in the development of a high effectiveness evaporative cooling section. With effectiveness measured on the difference between entering dry bulb and wet bulb temperatures, values of 0.90 have been demonstrated.

EFFICIENCY GOALS

ICC has been working closely with the American Gas Cooling Center and its member companies to establish market based efficiency targets. In addition, ICC has been working with the Gas Research Institute to investigate paths for optimization and provide third party test results. The consensus at this point is that a desiccant based cooling system in a packaged rooftop configuration which, at rating point, achieves a thermal COP of 0.7 and a capacity of 400 CFM per ton will be commercially viable if competitively priced.

The ultimate value will, in large part, rest on seasonal values of efficiency and capacity. In reality, seasonal considerations in the United States are geographically specific with regard to length of season and nature of cooling need. The unit design proposed has inherently many operating modes. Depending on location , different modes may be employed which allow increased capacity and reduced energy use through the cooling season.

For example, in the Southwestern U.S. where the cooling season is dominated by high temperatures and low humidities, the evaporative cooling sections and the high effectiveness heat exchanger can be employed alone to meet cooling needs. With the desiccant rotor section inactive, there is no thermal energy requirement. When, periodically, lower temperatures and high humidities are encountered, the system will revert to the "standard" operating mode.

RESULTS

As discussed, the performance levels for system components substantially exceed currently available technologies. When component characteristics are evaluated in a stepwise manner to predict system performance, the resulting values become the design goals for the finished product. The following table summarizes the values as calculated from test results for a 2000 CFM system.

	RATING POINT VALUES	
	Temperature F	Humidity gr/lb
Return Air	80	78
Leaving Desiccant Wheel	138	15
Leaving Heat Exchanger	83	17
Sensible Cooling	- 3326 Btuh	
Latent Cooling	41431 Btuh	
Total Cooling	38105 Btuh	
Capacity	315 CFM/ton	
Thermal COP	0.89	

A bench scale prototype has been constructed and tested. The desiccant and heat exchanger wheels used were 11 inches in diameter of active area and 8 inches deep. Unfortunately tests have not yet been completed at the exact conditions of the ARI rating point. However tests at conditions of 83F dry bulb temperature and 68F wet bulb temperature for return air with 74F return air at 95% relative humidity were documented and replicated. The results of those tests and a comparison to the optimum expected are shown below.

	MEASURED	PREDICTED
Total cooling	3608 Btuh	4470 Btuh
Heat input	4058 Btuh	4429 Btuh
COP	0.89	1.01
Capacity	333 CFM/ton	268 CFM/ton

Given that the bench scale unit was constructed of readily available components and, therefor, minimal adjustment and optimization was possible, the results are sufficient to prove viability of the components developed. These values exceed any published for a complete working desiccant based system at conditions approximating the accepted rating point.

Full scale prototype units have been constructed. Performance tests are now underway at ICC's plant. Construction issues dominate the current work on the prototype units. The major issues are packaging arrangements and the integrity of the vapor seals. The system requires that sections of very high vapor pressure be adjacent sections of very low vapor pressure. Both capacity and efficiency degrade rapidly if water vapor passes the barriers.

FUTURE PLANS

On completion of the prototype tests, a series of natural gas fired units will be placed in field operation under the auspices of the American Gas Cooling Center and member gas companies. The Gas Research Institute will assist in the monitoring of these field sites. Although many sites have been selected, there are opportunities for placement of additional units under other cooperative programs.

Concurrently ICC and Engelhard will continue the process of wheel development with emphasis on manufacturing techniques and cost optimization. The field prototype units will also provide guidance in mechanical design. Component life cycle testing is scheduled to be undertaken this summer at Lehigh University. Test fixtures have been fabricated and installed and a test plan developed.

On a longer term basis, work is underway to develop a version of the ETS material which can be sufficiently regenerated at a temperature of 140F to provide substantial moisture removal. Preliminary attempts have been successful to the point where up to 50 % of entering moisture has been removed by a wheel regenerated by air at 140F with high moisture content. Materials with even more promising isotherms than the material tested have been developed. ICC has applied for Patents on a combined desiccant cycle and heat pump cycle system. The Patent Applications describe the sizing and arrangements of compressors, evaporators and condenser, applicable operating modes, and methods of control. A schematic is shown.

A hybrid unit offers potential where fuel availability is limited or use is restricted. It may be viewed a less radical departure from conventional equipment. It will be competitive with regard to source fuel, but may be a slightly more costly product.

It is planned that bench scale and full scale units will be built and tested this summer. The full scale test is currently planned as a proof of principal using heat from an existing condenser.

DEVELOPMENTAL HURDLES

Even though the materials and a set of manufacturing techniques have been developed which show that a desiccant cooling system meets minimum performance goals and promises to be of moderate cost, there remain many issues which must be addressed and obstacles overcome before this technology is commonly used. There are questions at both the engineering and consumer level as to what air conditioning should be. These questions center on regional weather based needs and perception of comfort.

New technology is met by the in place service sector with concern derived from a fear of the unknown. New technology must be supported in terms of education and radification by acknowledged resource centers.

Government policy and regulation have a significant impact on design issues. It is important that goals be clearly understood and that the means of achieving these goals known by equipment designers and manufacturers. The equipment developed from this technology must be designed to bases of evaluation.

Optimization of operation will largely be dependent on control systems which will largely depend on the availability of cost effective and reliable hardware. There are currently great gaps in sensors for humidity and comfort and motor speed controllers. More cost effective, high efficiency gas heating systems would be a boon to the development and acceptance of this technology.

Within all of these areas, consensus as to goals among government, utilities, users and manufacturers will offer the speediest market introduction of desiccant cooling systems.

OPEN CYCLE THERMAL SWING AIR CONDITIONER

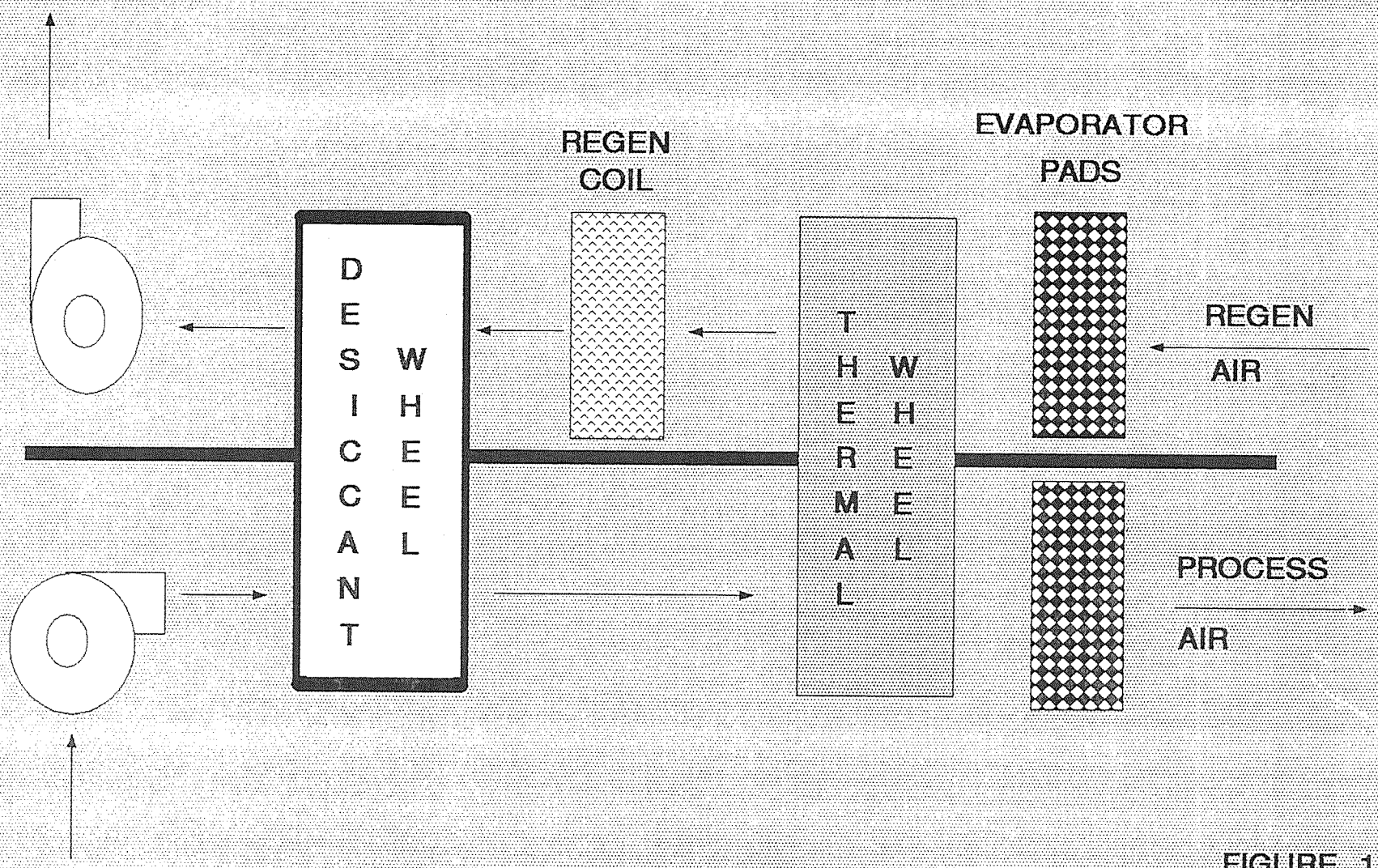

FIGURE 1

DESICCANT LOADING

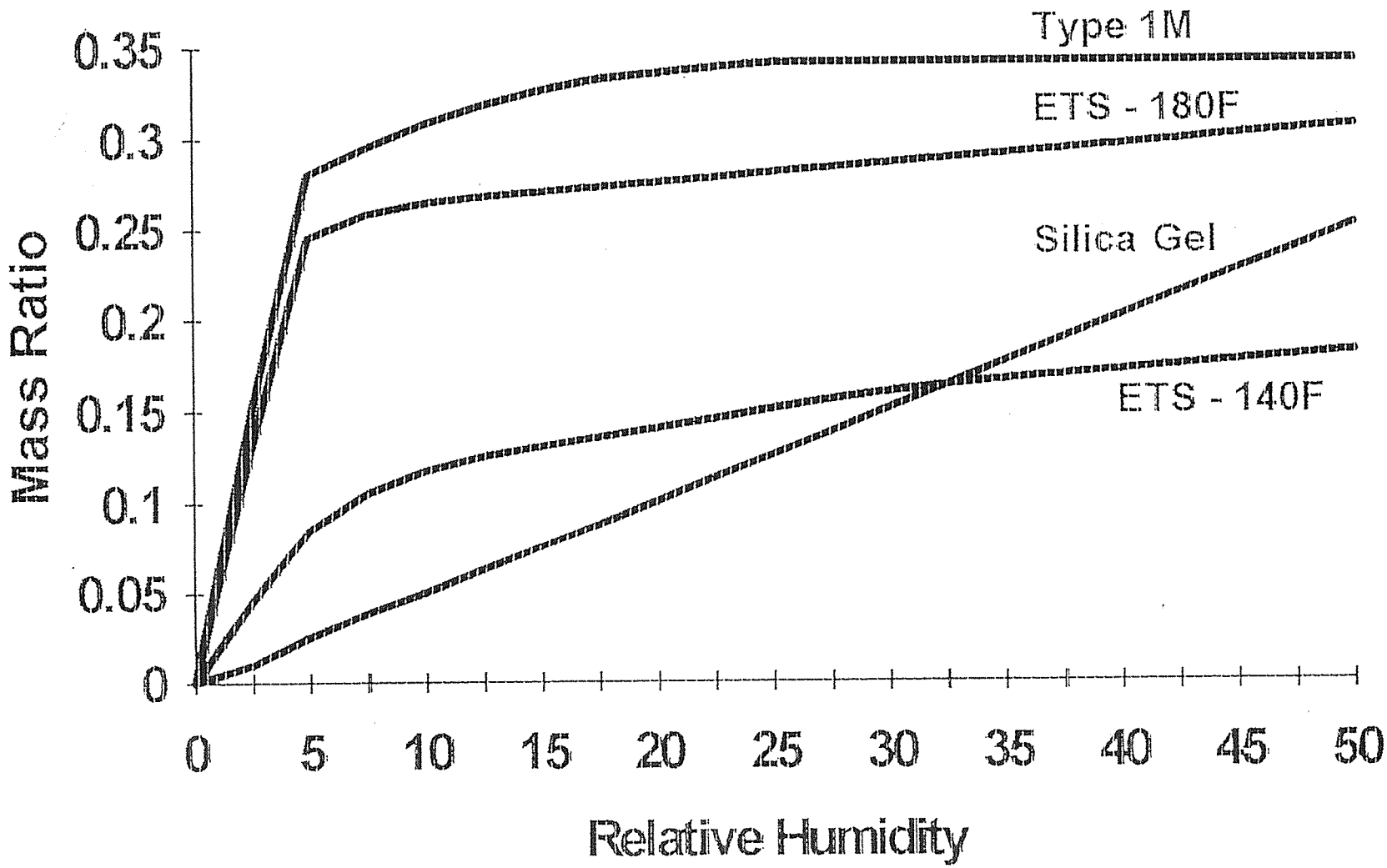

ICC Technologies

ETS DESICCANT WHEEL PERFORMANCE

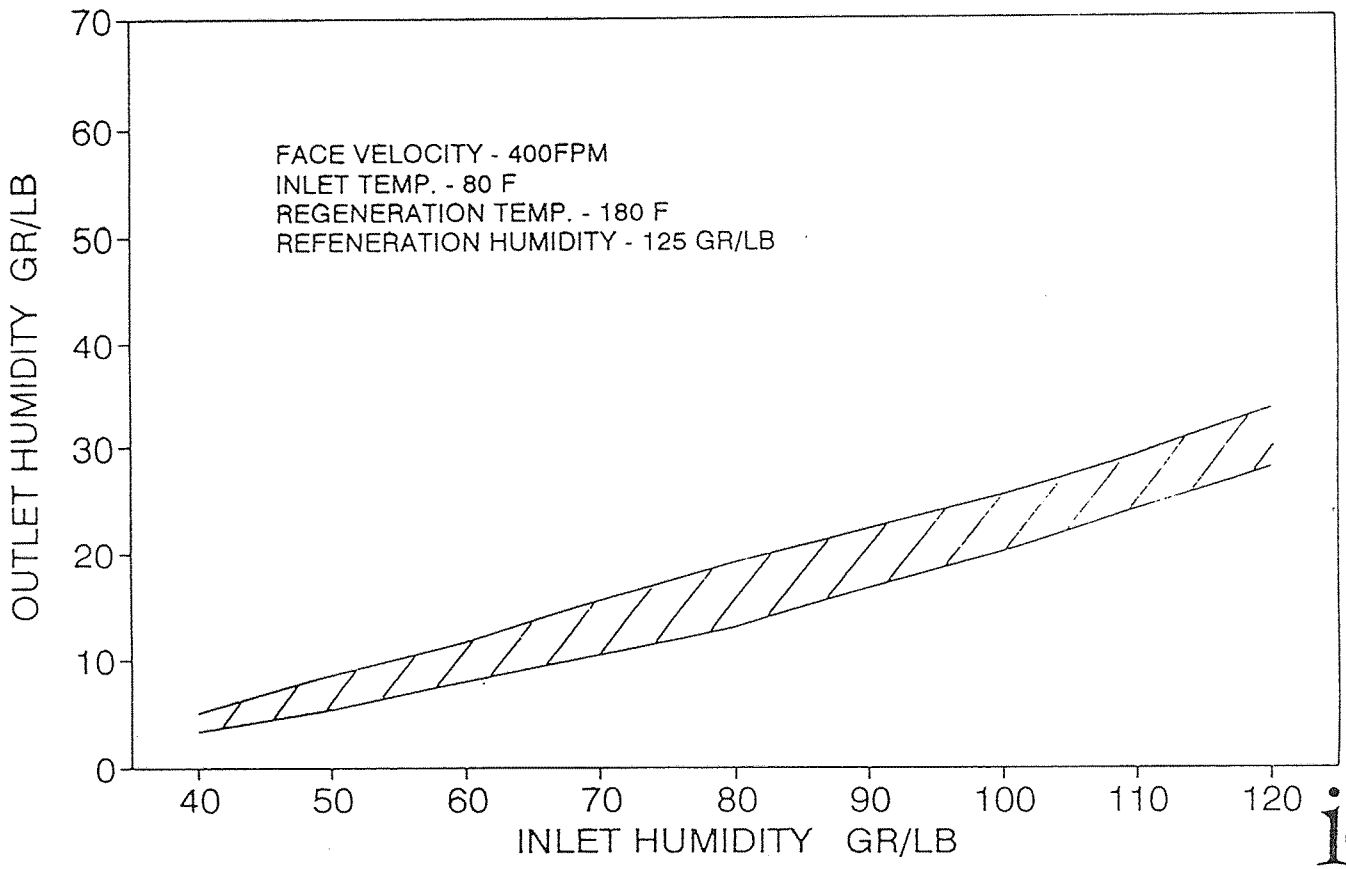

ICC TECHNOLOGIES
[illegible] NORTH FIFTH STREET
PHILADELPHIA, PA [illegible]

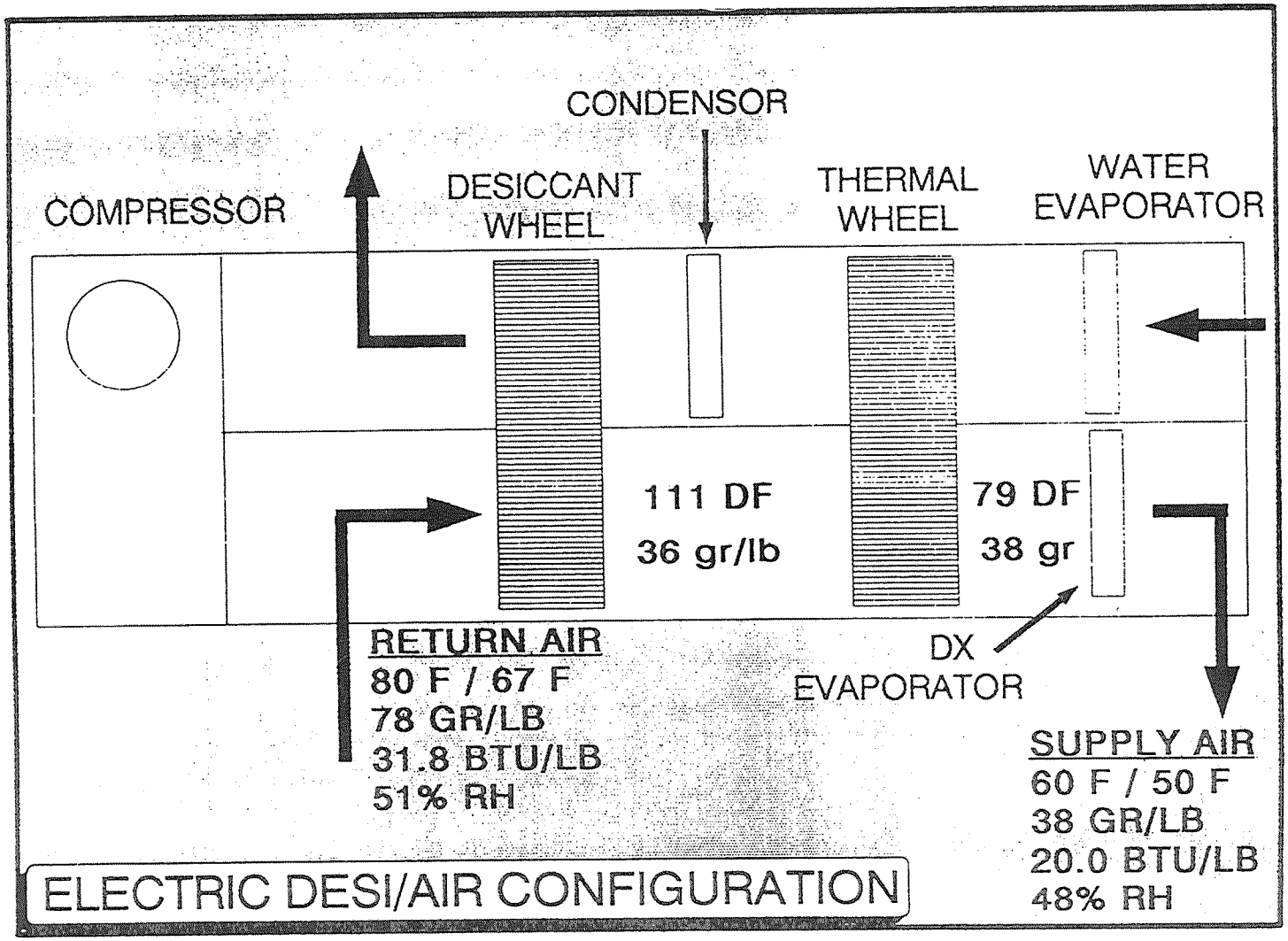
CONDENSOR
COMPRESSOR
DESICCANT WHEEL
THERMAL WHEEL
WATER EVAPORATOR
111 DF
36 gr/lb
79 DF
38 gr
RETURN AIR
80 F / 67 F
78 GR/LB
31.8 BTU/LB
51% RH
DX EVAPORATOR
SUPPLY AIR
60 F / 50 F
38 GR/LB
20.0 BTU/LB
48% RH
ELECTRIC DESI/AIR CONFIGURATION

Cooling Inputs / Outputs / Efficiency - 2000 cfm DESI/AIR heat pump

Compressor Size:	4.0 hp
Fan Sizes:	2 x 0.75 hp
Miscellaneous (pump, drives):	250 watts
Total Energy Input:	4.9 kW
Sensible Cooling:	43,200 btuh
Total Cooling:	97,600 btuh (8.1 tons)
EER:	97,600 btuh/4900 watts = 19.9
Peak Reduction from EER = 12:	3.2 kW (39.5%)

United States Patent [19]
Kuznicki
[11] Patent Number: 4,853,202
[45] Date of Patent: Aug. 1, 1989

[54] LARGE-PORED CRYSTALLINE TITANIUM MOLECULAR SIEVE ZEOLITES

[75] Inventor: Steven M. Kuznicki, Easton, Pa.

[73] Assignee: Engelhard Corporation, Edison, N.J.

[21] Appl. No.: 94,237

[22] Filed: Sep. 8, 1987

[51] Int. Cl.[4] C01B 33/24
[52] U.S. Cl. 423/326; 423/598
[58] Field of Search 423/326, 331, 332, 598

[56] References Cited

U.S. PATENT DOCUMENTS

3,329,481 7/1967 Young 208/119
4,591,576 5/1986 Chiang et al. 502/65
4,666,692 5/1987 Taramasso et al. 423/326

FOREIGN PATENT DOCUMENTS

59-184722 10/1984 Japan 423/326

OTHER PUBLICATIONS

A. N. Mer'kov et al; Zapiski Vses Mineralog. Obshch., pp. 54–62 (1973).
Sandomirskii et al, "The OD Structure of Zorite", Sov. Phys. Crystallogr., 24(6), Nov.-Dec. 1979, pp. 686–693.

Primary Examiner—John Doll
Assistant Examiner—R. Bruce Breneman
Attorney, Agent, or Firm—Inez L. Moselle

[57] ABSTRACT

New crystalline titanium molecular sieve zeolite compositions having a pore size of about 8 Angstrom Units are disclosed together with methods for preparing the same and organic compound conversions.

5 Claims, No Drawings

US005148374A

United States Patent [19]

Coellner

[11] Patent Number: 5,148,374

[45] Date of Patent: Sep. 15, 1992

[54] DESICCANT SPACE CONDITIONING CONTROL SYSTEM AND METHOD

[75] Inventor: James A. Coellner, Philadelphia, Pa.

[73] Assignee: ICC Technologies, Inc., Philadelphia, Pa.

[21] Appl. No.: 540,547

[22] Filed: Jun. 19, 1990

[51] Int. Cl.[5] A01D 43/02

[52] U.S. Cl. 364/505; 73/168; 55/163

[58] Field of Search 364/510, 551.01, 505; 55/390, 163, 161, 160; 73/168

[56] References Cited

U.S. PATENT DOCUMENTS

4,519,540 5/1985 Boulle et al. 237/7
4,546,442 10/1985 Tinker 364/500
4,701,189 10/1987 Oliker 55/34
4,717,396 1/1988 Stengile et al. 55/20
4,729,774 3/1988 Cohen et al. 55/181
4,769,053 9/1988 Fischer, Jr. 55/389
4,873,649 10/1989 Grald et al. 364/505
4,895,580 1/1990 Morioka et al. 55/160
4,926,618 5/1990 Ratliff 55/20
4,927,434 5/1990 Cordes et al. 55/20

Primary Examiner—Parshotam S. Lall
Assistant Examiner—S. A. Melnick
Attorney, Agent, or Firm—L. A. Husick

[57] ABSTRACT

A system and method for real-time computer control of multi-wheel sorbent mass and energy transfer systems by optimization of calculated mass transfer ratios and measures of system effectiveness which are not subject to long system time constants.

12 Claims, 3 Drawing Sheets

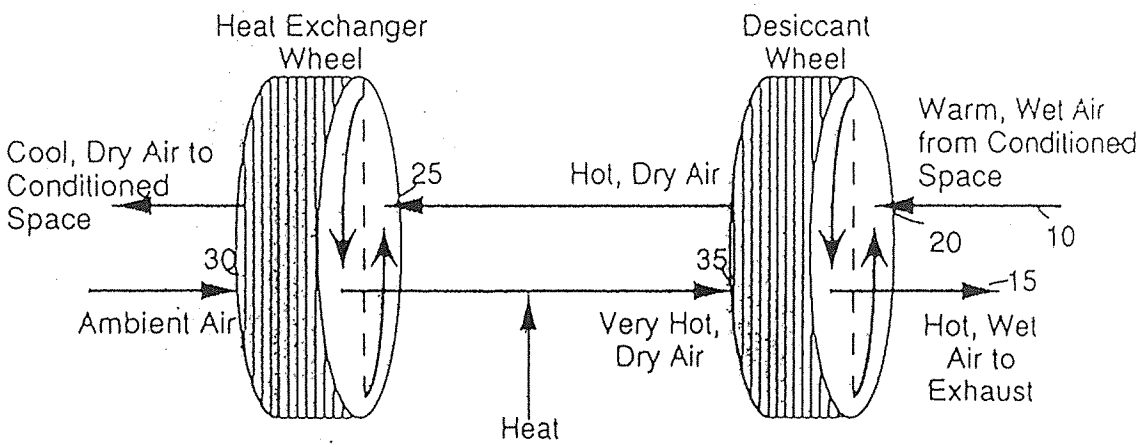

Open-Cycle Desiccant Cooling Technology
A Pathway to the Future

William A. Belding, Ph.D.[1]

Introduction

Over the last four years, LaRoche Chemicals Inc. under a joint research project with the Gas Research Institute, has developed an advanced desiccant wheel for use in open-cycle desiccant cooling systems. The new wheel technology, in conjunction with innovative equipment design shows promise for placing desiccant cooling systems in a competitive position with existing high performance electric vapor compression equipment. In fact, other side benefits of this technology should provide a strong driving force for its acceptance in the air conditioning market place.

Technology Description

Open Cycle Desiccant Cooling

Perhaps the simplest way to understand the concept of desiccant cooling is to think of the desiccant's role as creating a desert climate so that an evaporative cooler can function very efficiently. This technology utilizes only water as a refrigerant. In a typical desiccant cooling system, the process air is dried to a low dew point by passing it through the laminar flow channels of a rotating desiccant wheel. The desiccant is contained in the walls of the channels. In its most basic design, the wheel is partitioned into two sections allowing flows in opposite directions. The process side of the wheel provides dehumidification. In the case of a solid desiccant, water condenses on the internal surface of its fine network of pores. On condensation, the water's latent heat is released in addition to the heat of wetting of the surface. The total combined heat is called the net heat of adsorption. The air, therefore, exits the process side of the wheel hot and dry. Passing this process air through a heat exchanger allows most of the added heat to be rejected and to be used later for regenerating the desiccant. This cooler, dry air is passed though an evaporative cooler. Sufficient water is evaporated into the air to reduce its temperature substantially, while still providing a comfortable humidity level.

---

[1] W.A. Belding was formerly Research Director for LaRoche Chemicals Inc., Pleasanton, CA and is presently President of Innovative Research Enterprises, Danville, CA and consultant to LaRoche Chemicals, Inc., Baton Rouge, LA

Open-Cycle Desiccant Cooling Technology

A desiccant cooling system can be operated in either a recirculation mode, where return air from the building is processed through the adsorption side of the desiccant wheel or a ventilation mode, where outside air is processed through the adsorption side of the wheel.

On the regeneration side, in the recirculation mode of operation, outside air is first passed through an evaporative cooler to provide a heat sink for the heat exchanger. The heat exchanger is able to recover, for regeneration, most of the heat generated during adsorption. The hot air stream exiting the heat exchanger is then further heated by a gas-fired burner, a boiler system, a solar heat source or waste heat from another process.

In the ventilation mode, outdoor air, rather than building air, is used to feed the process side. The hotter, more humid outside air creates a larger load on the desiccant wheel and the air exits the process side hotter than in the recirculating mode of operation. The cooler building air feeds the regeneration side and is able to provide a colder heat sink for the heat exchanger than it can in the recirculation mode, offsetting the impact of the higher temperatures on the adsorption side.

Type 1M Concept

Collier et al.[1] extensively modeled the effect of modifying desiccant properties on the cooling capacity and thermal coefficient of performance (COP) of open-cycle desiccant cooling systems. The thermal COP is an indication of efficiency and is defined as the ratio of the cooling capacity to the thermal input to the system. In this work, he pointed to the need for a desiccant exhibiting a particular modified Langmuir Type 1 isotherm shape, referred to as Type 1M. The isotherm shape is defined by the following formula, where the separation factor, R, equals 0.1:

$$SC = FC/ (R+FC-R*FC) \qquad (1)$$

where

SC = relative solid concentration
FC = relative vapor concentration
R = separation factor.

Figure 1 illustrates a Type 1M isotherm with a separation factor, R, of 0.01 compared to Type 1 extreme (R = 0.1) and linear (R = 1.0) isotherms. The moisture breakthrough curves predicted for a Type 1M desiccant are sharp enough to be contained during the adsorption cycle. Wavefront containment is necessary if significant improvements are to be made in

system COP. During the regeneration cycle, the water can also be efficiently removed from the desiccant without breakthrough of the temperature wavefront. Strongly adsorbing desiccants such as 3A and 4A zeolites with Type 1 extreme isotherms give very sharp wavefronts on adsorption but significant temperature breakthrough results on regeneration. Silica gel, having a near-linear isotherm, regenerates easily without temperature breakthrough, but adsorption wavefronts are broad and low dew points can not be maintained. The Type 1M desiccant provides the required balance between adsorption and regeneration modes resulting in contained wavefronts on both sides.

The total equilibrium capacity of the desiccant also is important due to diffusional limitations and overall heat capacity effects. Theoretically, the rotational velocity of the desiccant wheel can be increased to compensate for low desiccant capacity, but at a certain speed, a point of diminishing returns is reached. With short cycle times, heat and mass transfer resistances can seriously degrade performance and a significant portion of the heat from the regeneration side can be carried over to the adsorption side of the process due to the heat capacity of the wheel.

Modeling has also demonstrated that elevated regeneration temperatures, in conjunction with the Type 1M isotherm, result in significant improvements in system cooling capacities.[2] Currently, commercial systems operate at temperatures near 212° F (100° C) and, in most cases, materials of construction for the desiccant wheel and seal systems prevent their use at higher temperatures.

LaRoche Chemicals has now developed a high temperature Type 1M wheel having the adsorption isotherm shown in Figure 2. The total equilibrium loading at 60% RH is about 20%. Although aging studies are still underway and will be for some time in the future, the desiccant is expected to be thermally stable under cyclic regeneration at temperatures of at least 200° C.

Application

Conventional technology has restricted the use of desiccant cooling to niche markets that can bear a high price. Existing systems are bulky compared to electrical vapor compression units of equivalent cooling capacity. The advanced desiccant technology developed by LaRoche Chemicals will boost both the capacity and efficiency of desiccant cooling systems, making them considerably more competitive.

Desiccant cooling technology has been slow to penetrate the mainstream HVAC market

and its application is now found principally in markets where moisture control is critical. For example, some supermarkets are seeing the benefits of low humidity from desiccant cooling in maintaining frost-free open food freezers without the additional cost of overcooling and reheat. A notable side benefit has been the comfort of their customers and employees; the stores did not have the cold, clammy feel of typical air conditioned markets in humid climates.

Desiccant cooling has also made inroads in applications requiring a high percentage of ventilation air. The penalty incurred by operating a desiccant cooling system in a ventilation mode is far less than that with conventional air conditioning systems. Hospitals and laboratories are typical examples of this application of the technology.

Other prime applications where the advantages of desiccant cooling technology have been documented are fast food restaurants and hotels. Fast food restaurants have high humidity loads from occupants and kitchen activities and hotels in humid climates have problems in handling the cyclic humidity loads in the guest rooms.

LaRoche Chemicals has postured itself as a desiccant wheel, wheel cassette, and technology supplier to the HVAC manufacturers. Significant interest in desiccant cooling technology has been shown by potential manufacturers. LaRoche's new technology will allow manufacture of equipment with significantly reduced size and first cost. For the first time, penetration into the residential and light commercial markets can be expected.

Benefits

A need exists in the HVAC market for an economical gas cooling device for residential and commercial buildings. With this technology, the potential exists for significant electric peak load leveling, even with partial substitution for existing electric vapor compression units. Natural gas fired desiccant cooling systems will provide an excellent tool for utility companies' demand side management programs. Long term load leveling during peak summer months will result in a reduced demand for additional electric power plants which add to utility costs. The new power plants have negative environmental impacts particularly in the case of coal-fired operations where additional CO_2 generated is a major contributor to global warming. With the current global emphasis on the ozone depletion issue, there is a requirement for cooling devices that do not utilize CFCs and HCFCs. Desiccant cooling devices address these needs in that water is the refrigerant used.

Comfort is a benefit which is difficult to quantify but it could represent a strong driving force in the market. Anyone who has spent time in the Southeast U.S. especially during the hot

summer months is very much aware of the physiological effects of humidity. Control of humidity in buildings using desiccant equipment could allow thermostat settings to be increased, enhancing comfort and eliminating the cold wet chill that conventional systems provide. Standard practice is to overcool and reheat air to control its humidity level. This very inefficient method of humidity control is generally used only in large buildings and in industrial facilities and has not been used in residential air conditioning. Desiccant cooling, using this advanced technology, can provide the option of independently controlling temperature and humidity for a wide range of markets.

Indoor air quality has become a growing concern since buildings are being sealed more tightly to achieve improved energy efficiencies. High moisture levels and inadequate levels of ventilation air have resulted in an increased number of "sick" buildings. Desiccant cooling technology can meet the need for improved indoor air quality by reducing or eliminating the energy penalty for increased ventilation air and reducing moisture loads without having to overcool and reheat.

Building maintenance cost in humid climates can be favorably affected by lower indoor humidities. In buildings lacking proper humidity control, mildew can cause damage to wall, floor and window coverings and can become a sanitation problem for bathrooms. Hotels are especially vulnerable since moisture loads in hotel rooms fluctuate considerably during the day.

A desiccant cooling system can be run in a ventilation mode without the severe penalty typical of conventional vapor compression units. This is due to the ability of the unit to exchange heat with the outside air. A desiccant unit can, therefore, provide a significant operating cost benefit to applications such as hospitals, laboratories and other applications requiring a high portion of ventilation air.

Technical Issues

LaRoche has now successfully manufactured a desiccant wheel which exhibits an equilibrium isotherm that closely matches the Type 1M shape and provides total water uptake of about 20% at 60% RH. Wheel sections have been evaluated in dynamic tests with favorable results verifying the computer models developed for this project. The next major technical development phase is addressing the performance of the wheel when operated in an actual cooling system.

A fully instrumented test bed including a complete desiccant cooling system and conditioning loops for the process and regeneration sides of the process has been set up. A

Type 1M wheel has been installed in a cassette which in turn has been installed in the system. Initial testing is presently underway to determine the performance of the wheel in the test bed configuration.

Desiccant aging can have a negative impact on wheel performance. On repetitive adsorption/desorption cycling, particularly at elevated temperatures, the equilibrium moisture capacities decline, especially in the low relative humidity end of the isotherm. The shape of the isotherm can become more linear or a portion of the curve can even exhibit a concave upward inflection, resulting in a decline in system performance. In a typical application, a desiccant will be exposed to 15,000 to 20,000 regenerations/year. It is, therefore, imperative that isotherms of aged desiccants be evaluated for determining projected system performances. Since the use of a direct gas-fired burner is favored to achieve high temperature regeneration, the impact of the products of combustion on both the equilibrium isotherm and adsorption rate must be defined.

The long term effects of dust buildup in the channels of the desiccant wheel could have a serious effect on system performance. Thought and planning are being given to filter requirements as well as maintenance techniques for rejuvenating a wheel partially clogged with dust. Tests will be designed to indicate the effects on performance of mechanical cleaning of the wheel.

During this project, wheel manufacturing techniques have been developed which can be directly scaled-up to commercial production. There are, however, significant challenges remaining in optimizing each part of the wheel manufacturing operation. Manufacturing a cassette which operates continually at elevated temperatures is another concern. Existing systems are, for the most part, low temperature operations, do not require high temperature seal materials, and are not exposed to as much stress on cycling. Although initial efforts have proven successful in testing to date, continued improvements will be sought in the area of cassette and seal design.

A final technical issue involves the area of ratings and standards. Desiccant cooling systems are able to provide comfort at a different set of temperature and humidity conditions than a vapor compression unit. Performance at ARI indoor or other standard conditions may not reflect the conditions of actually usage since the humidity can be controlled independently of temperature in a desiccant system. It may be necessary to devote some effort to developing improved standards of comparison for the different types of equipment.

Economics

Although existing desiccant cooling systems have penetrated certain commercial markets, they have not performed well enough to meet general market needs, which include the light commercial and residential sectors. For current systems, both operating and initial capital costs are too high.

To make a valid operating cost comparison between desiccant cooling systems and electrical air conditioners, it is especially important to use a seasonal basis rather than a standard single operating point (i.e. ARI rating condition). Collier and McFadden[3] developed detailed seasonal performance characteristics of a Type 1M desiccant system using a residential energy modeling program. At part load conditions, desiccant cooling efficiencies increase significantly if the equipment has variable speed capabilities. The thermal COP, defined as the cooling capacity divided by the natural gas energy input for regeneration, increases as a result of lower flow rates and longer contact times with the desiccant. Parasitic electrical demand is reduced resulting in an increased energy efficiency ratio (EER) which is defined as the cooling capacity divided by the parasitic electrical power (Btu/w-hr).

Proper operating cost comparisons need to be made city-by-city since cooling loads and utility costs (especially electric) vary significantly. For example, Figures 3 and 4 from Reference 3 compare energy costs (by component) of fixed and variable speed desiccant cooling against costs of electric air conditioning (SEER 10) for Atlanta, Chicago, Dallas and Phoenix. Although the total cost of a fixed speed design is slightly higher in Atlanta, the variable speed design provides lower cost. The very low gas-to-electric ratio for Chicago makes desiccant cooling an attractive alternative even though the cooling season is shorter than the other cities. In Phoenix the desiccant system is projected to have considerably lower operating cost partially due to the special gas cooling rates for the city. Dallas with its low electric rates is the only city of the four where electric air conditioning offers an operating cost advantage.

For the three most humid cities, Atlanta, Chicago and Dallas, indoor air relative humidities exceed 60% for a large number of operating hours as shown in Figure 5. Desiccant cooling will reduce indoor humidity levels, significantly reducing the number of days where relative humidity exceeds 60%. Although the enhanced comfort and reduced maintenance afforded by improved humidity control is difficult quantify, it is expected that a desiccant cooling system will be able to command a premium price in humid areas of the country off-setting additional first cost increases resulting from the higher cost of variable speed motors for example. This "comfort factor" could also offset incremental operating expense differences in humid areas.

Open-Cycle Desiccant Cooling Technology

LaRoche has developed wheel technology which should permit high temperature regeneration using a direct fired gas burner. This will favorably impact the first cost of the system by eliminating both a boiler and heat exchanger and the operating cost by lowering losses in heat transfer.

Desiccant cost and availability are important criteria impacting wheel cost. Due to the large potential market for desiccant cooling, it is imperative that desiccant materials be commercially available or easily synthesized at a reasonable cost. To achieve its unique properties, the LaRoche desiccant is a synthesized product requiring several processing steps. Although the desiccant is not inexpensive, its performance gains justify its cost in that equipment size can be reduced dramatically. One key to cost reduction of the desiccant wheel is mass production. LaRoche's wheel manufacturing technology is adaptable to high speed equipment removing much of the labor intensity of manufacturing.

LaRoche sees its business position as being a desiccant wheel cassette manufacturer selling to HVAC equipment manufacturers who have fabrication experience, installation and service capabilities, plus extensive marketing knowledge. Given this approach, LaRoche anticipates a declining first-cost over time as a function of market acceptance and manufacturing cost economies. Accordingly, costs have been estimated based on LaRoche's experience to date in raw materials and manufacturing. Production costs have been calculated using reasonable current cost estimates of each of the manufacturing steps and projected with adjustments for inflation and presumed economies.

Field evaluation units with 3-ton cooling capacities will be priced comparable to high efficiency (SEER 12) conventional equipment. This is also the targeted first cost of market launch units. As market acceptance grows, economies of scale should enable LaRoche to sell its wheel cassettes to equipment manufacturers at a price where they will be competitive with standard equipment. It is conceivable that incentives and stimulants anticipated from the gas utilities will assist LaRoche's equipment manufacturing partners in effecting an installation cost comparable to mainstream conventional equipment. With rapid market acceptance, continued support of gas industry partners, cost economies likely in equipment fabrication steps, and cost savings programs subscribed to by LaRoche, it is possible that LaRoche's desiccant wheel cooling systems may ultimately underprice conventional equipment price levels.

The performance of LaRoche's desiccant cooling system derives considerable economic benefit to ultimate users depending on their utility situation. Commercial adopters, in particular those who must now pay high electric demand charges, will profit from reduced energy consumption. Also, the LaRoche desiccant system addresses their humidity control, indoor air quality and mildew concerns. Residential applications offer similar economic

advantages to homeowners. Market research has revealed that residential users perceive the "creature comfort" benefit due to humidity control. Comfort affords significant qualitative benefit in addition to the operating energy cost savings allowable from setting the thermostat at a higher temperature.

Technology Outlook

Presently LaRoche has successfully manufactured a Type 1M wheel which exhibits an equilibrium isotherm that closely matches the goal in both shape and total uptake. For the most part, manufacturing techniques have been developed which can be directly scaled up to commercial production.

The dynamic performance of a core section of the Type 1M wheel has been tested at the with very favorable results. Low dew points have been maintained over relatively long periods of time.

A Type 1M wheel is under test now in a fully instrumented test bed. Within the next month test data will be gathered to prove the concept of the Type 1M desiccant. Naturally the performance data are eagerly awaited by concerned parties.

LaRoche is now designing a large performance testing and aging facility. One portion of the facility will be devoted to performance testing of wheels under a variety of climatic and operating conditions. Control strategies unique to desiccant cooling systems will be optimized.

An efficiently operating desiccant cooling system depends on minimal leakage and cross-flows in the system. Several test stations for long term testing of the high temperature wheel seals will be set up. These test units will simulate cyclic operation of the wheels in use. Mechanical seal design and seal materials will be further optimized.

Since the desiccant wheel has been designed for long term (5 to 10 year) use, the question of aging is of extreme importance. LaRoche now has indirect-fired aging tests underway with small specimens of desiccant and wheel matrix materials. Since data must be accumulated over many thousands of cycles under simulated real world conditions, the new aging facility will provide for testing small wheels in multiple stations under direct gas-fired operation. Other tests in this facility will assess the impact of dust on performance and how the wheel can be rejuvenated when clogging occurs.

The manufacturing process has been developed with commercial scale-up in mind but

optimization of the various manufacturing processes is necessary to minimize and recycle waste so that the lowest possible price can be given to the market place. Within the next few months the critical unit operations will be scaled up and 25-50 wheels will be produced for testing.

Deployment of a variety of field test units is set for fiscal 1994. Commercialization of 3- to 10-ton units will immediately follow. LaRoche has researched market penetration scenarios and believes that the rate of adoption is dependent on several factors. A plausible market penetration scenario is a niche market with slow but steady growth, largely in the light commercial replacement sector. An alternative, scenario is rapid acceptance where external pressures (e.g. amassed public opinion concern for global warming) and industry competitive dynamics champion an environmentally-friendly air conditioning technology as is represented by LaRoche's desiccant cooling system. LaRoche estimates the niche scenario as accounting for less than 10% of the total domestic HVAC market, while the rapid penetration case could represent over 30% in 10 years. Similar potential exists for the penetration of desiccant cooling systems in world market regions where the climate is hot and/or humid and natural gas grids are in place.

References

1. Collier, R.K., Jr., T.S. Cale, and Z. Lavan. 1986. "Advanced desiccant materials assessment, phase 1, final report." Gas Research Institute Report GRI-86/0182.

2. Collier, R.K., Jr., D. Novosel, and W.M. Worek. 1990. "Performance analysis of open-cycle desiccant cooling systems." ASHRAE Transactions, Vol. 96, Part 1.

3. Collier, R.K. and McFadden, D. "Development of low cost desiccant air conditioning systems using type 1M materials, final report" Gas Research Institute Report GRI-91/0159, February 1991

Figure 1 Langmuir Isotherms with Different Separation Factors

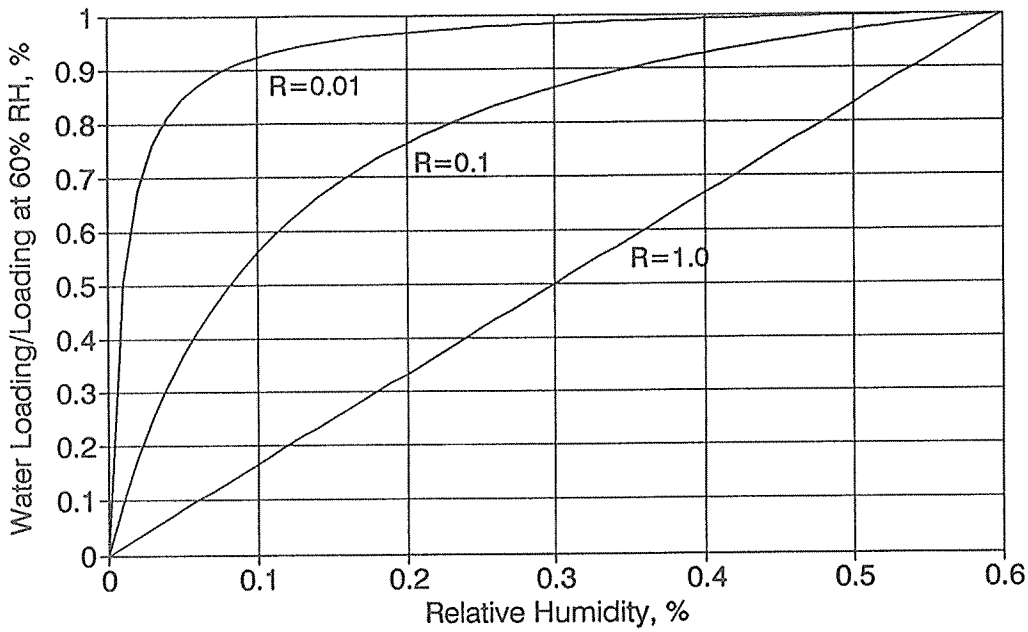

Figure 2 Water Adsorption Isotherms
LaRoche Wheel Compared to Type 1M

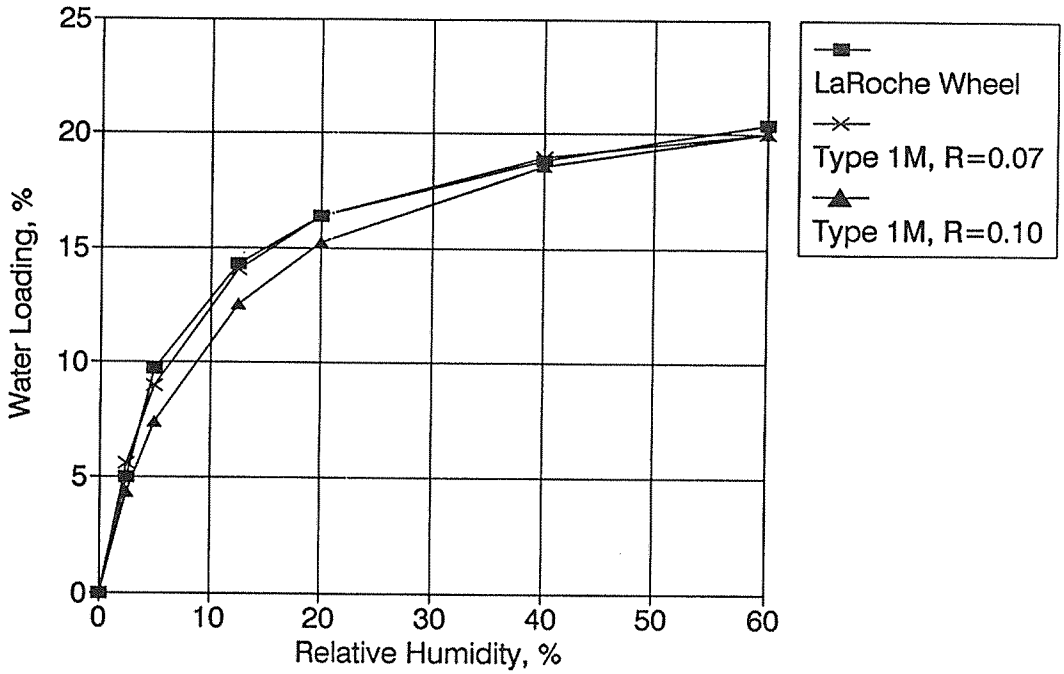

Figure 3 - Operating Cost Comparison
Desiccant Cooling vs. Electric A/C

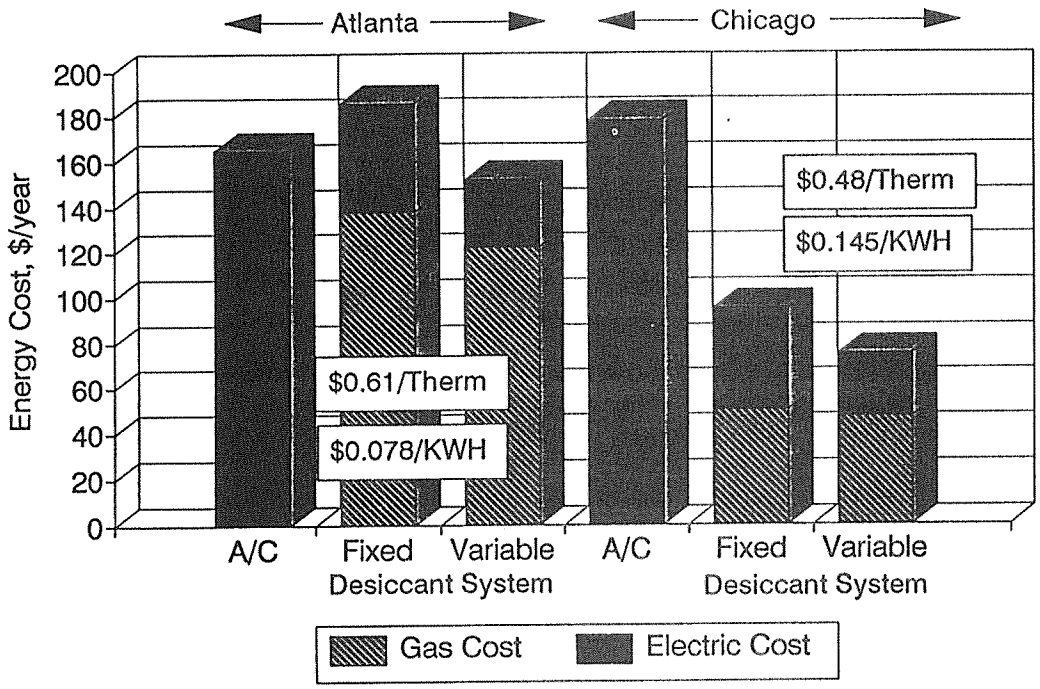

Figure 4 - Operating Cost Comparison
Desiccant Cooling vs. Electric A/C

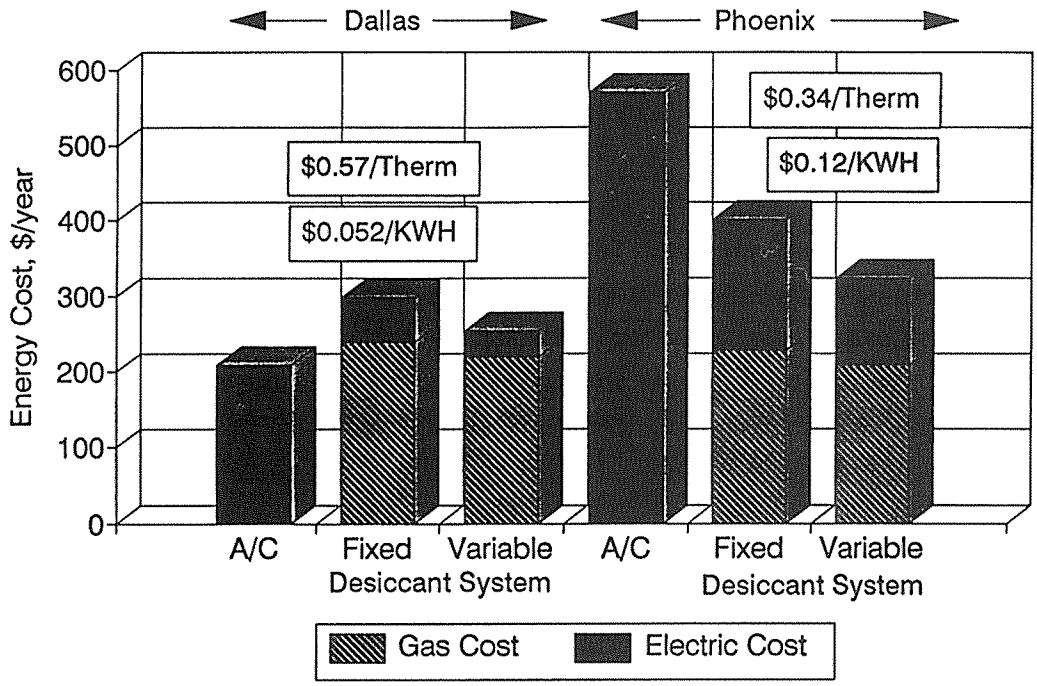

Figure 5 - Indoor Hours Exceeding 60% Relative Humidity

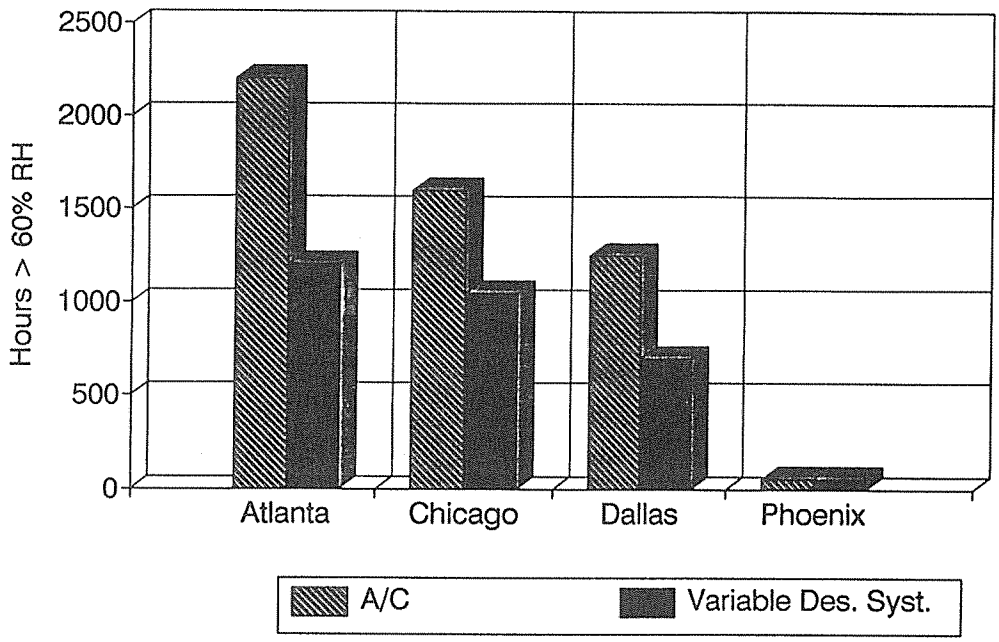

ADSORPTION HEAT PUMP DEVELOPMENT AT JPL

Jack A. Jones
Jet Propulsion Laboratory
California Institute of Technology
Pasadena, CA 91109

BACKGROUND

In simple sorption refrigeration systems, low pressure gases are physically adsorbed onto or chemically absorbed into various solids, typically near ambient temperatures or above (Figure 1). When heated an additional 100-300°C, the gases are desorbed, i.e., vented, at substantially higher pressures. When the high pressure gas is precooled and expanded through an orifice, known as a Joule-Thomson (J-T) valve, the gas becomes partially liquefied and provides net cooling. Heat boils the liquid, and the returning low pressure gas is eventually reabsorbed by the sorbent, thus completing the cycle. The entire refrigeration system has essentially no wear-related moving parts, other than very long life, self-operating, room temperature check valves. Thus life expectancy is many years, possibly decades, and there is essentially no vibration.

Since 1979, the Jet Propulsion Laboratory (JPL) has tested numerous hydrogen, oxygen, nitrogen, and krypton cryogenic sorption refrigeration systems[1,2] for cooling space-based infrared imaging systems. More recently, JPL has been developing a quick cooldown 10 K(-263°C) hydrogen sorption refrigeration system for the cooling of infrared sensors for the Strategic Defense Initiative Organization (SDIO) "Star Wars" missile tracking program. A proof-of-principle experiment was successfully conducted at JPL in 1991,[3] and a JPL Space Shuttle flight experiment is planned for 1994.

For ground applications, the simple sketch of Figure 1 has been found to be too inefficient to compete with alternate heat pump technologies. To conserve energy, a number of heat regeneration techniques have been attempted, whereby the waste heat from and sorbent bed is used to heat another sorbent bed. Shelton[4] and Tchernev[5] have devised a simple double-bed systems, in which a hot sorbent bed that is being cooled will pass its heat to a coolant fluid which then passes through a heater (to make up for regeneration thermal losses) and then on to another sorbent bed. A number of alternate techniques using four, six, or more beds have also been proposed.[6,7]

Extensive studies have been performed at JPL which show that a four bed approach is much more efficient that two beds, but there is not a significant advantage in using more than four beds.[8,9] In particular, a patented four bed approach (Figure 2) will use a fluid (water of oil) to transfer hot and cold thermal waves.[10] In addition, it has been discovered that significant performance improvement can be attained if the coolest sorbent bed is cooled further at the end of each quarter cycle

without regenerating the fluid through the other three sorbent beds. The results of the multiple bed analyses are shown Table 1.

In order to confirm the analytical tools, a single compact sorbent bed was fabricated and tested in both heating and cooling modes. The sorbent bed (Figure 3) consisted of activated carbon with a binder that was molded into a finned aluminum tube extrusion (patent pending[11]). Pressurized water was selected as the heating and cooling means. A hollow ullage volume in the center of the water stream allowed enhanced fluid heat transfer coefficients. The transient test results showed very good correlation to analytical predictions[9]. Of the three refrigerants that were tested (R22, R134a, and ammonia), ammonia was clearly far superior and yielded 1038 BTU/hr (304 watts) cooling for only a 0.51 Kg carbon bed (Table 2).

Coefficients of performance have been estimated for various standard heating and cooling conditions, and these are shown in Table 3. Modifications #1 and #2 are JPL/Caltech proprietary modifications that can greatly increase CoP efficiencies.

APPLICATION/ BENEFITS

The applications for the regenerative adsorption heat pump are air conditioning, heating, and refrigeration. The overall advantages of the advanced regenerative sorption heat pump over existing vapor heat pumps are

- Use of non-ozone depleting refrigerants
- Ability to use much lower greenhouse-effect fluids
- Long-life, reliable, solid-state compressors with no wear-related moving parts other than low frequency valves
- Use of any refrigerant with absolutely no lubrication requirements
- Noiseless and vibration-free compressor operation
- Inexpensive fabrication techniques and materials with no close tolerances or elaborate equipment required
- Use of long-life, reversible physical reactants, as opposed to corrosion-prone and potentially life-limiting chemical reactants
- Use of low pressure, single expansion, easily scalable systems, unlike complicated, high pressure, multi-effect liquid chemisorption systems that are corrosion-prone and cannot be scaled for small, home applications

- Greatly reduced winter and summer total fuel costs
- The condenser and compressor heat rejection systems can double as a domestic water heater to provide essentially free hot water while actually improving overall heat pump performance
- Significant net reduction in effluent pollution
- Reduction of U.S. dependence on foreign oil
- Reduction in electrical utilities peak load requirements of summer air conditioning

TECHNICAL ISSUES/ ECONOMICS

The most pressing technical issue at present is the confirmation of predicted CoPs, and confirmation of long lifetimes. Lifetimes of other sorbent beds at JPL have exceeded 32,000 continuous hours without any degradation in performance. These beds, however, are of a different configuration and do not have heat transfer enhancement fins, and thus accelerated lifetimes should be performed for carbon/fin configurations similar to that shown in Figure 3.

Another technical issue to be addressed is the selection of water or a heat transfer oil as the coolant fluid. Water provides much better heat transfer, but it must be pressurized to at least 225 psi (1.5 Mpa). Dowtherm or Therminol heat transfer oils can operate at low pressure, but they are toxic and potentially flammable.

A possible coolant flow schematic is shown in Figure 4 with four sorbent beds. For this system, it is necessary to obtain long-life, low cost, multi-port valves to redirect the heat transfer fluid for each quarter cycle. Another economic issue that must be addressed are trade studies that optimized system cost by comparing a four-burner system with that of a single burner system using either flow diversions or heat exchangers for heating each of the four beds.

Fabrication costs for actual mass production are anticipated to be low, since the compressors have no moving parts, no close tolerances, and can be made from inexpensive carbon and aluminum heat transfer devices.

TECHNOLOGY OUTLOOK

JPL is a NASA field facility that is operated by the California Institute of Technology (Caltech). As such, JPL is non-profit and is not permitted to compete with private industry. JPL is ,however, presently engaged in transferring the technology to private industry. A coalition team consisting of JPL, The Gas

Company of Southern California, and Aerojet is presently making plans for a three ton air conditioning heat pump prototype that will be fabricated and tested within two years.

Initial market penetration is anticipate to be for residential air conditioning/heat pump applications, with later applications of multi-family dwellings and possibly large scale industrial building applications. Refrigeration, including mobile refrigeration, is also under consideration for development.

ACKNOWLEDGEMENTS

The research described in this report was carried out by the Jet Propulsion Laboratory, California Institute of Technology, under a contract with the National Aeronautics and space Administration. Funding for the ground-based heat pump studies and tests was provided by The Gas Company of Southern California.

The kind assistance of a number of individuals is greatly appreciated: W. Boulter, M. Schmelzel, and C. Mirate for laboratory support; A. Yavrouian for carbon binder chemistry support; and V. Christophilos and J. Nolting for analytical trade-off studies.

REFERENCES

1. **Jones, J.A. and Golben, P.M.,** "Design, Life Testing and Future Designs of Cryogenic Hydride Refrigeration Systems," *Cryogenics*, 25 212 (1985).

2. **Jones, J.A.,** "Sorption Cryogenic Refrigeration -- Status and Figure," *Adv Cryog Eng* (1988).

3. **Bard, S., Rodriguez, J., Wu, J., and Wade, L.,** "10 K Sorption Cooler Development," *Proceedings of the Seventh International Cryocooler Conference*, Santa Fe, New Mexico (November 17-19, 1992).

4. **Shelton, S.V., Wepfer, W.J., and Miles, D.J.,** "Square Wave Analysis of the Solid-Vapor Adsorption Heat Pump," *Heat Recover Systems & CHP*, No. 3, pp. 233-247, Great Britain (1989).

5. **Tchernev, D. and Emerson, D.,** "Closed Cycle Zeolite Regenerative Heat Pump," 2nd International Workshop on Research Activities of Advanced Heat Pumps, Graz Austria (September 1988).

6. **Miller, E.B.,** "The Development of Silica Gel Refrigeration," *Refrigerating Engineering*, Vol. 17, No. 4, pp. 103-108, (1929).

7. **Wade, L, Alvarez, J., Reyba, E., and Sywulka, P.,** "Development of a

High Performance Sorption Refrigerator," paper presented at Space Cryogenics Workshop, California Institute of Technology, Pasadena, California (August 1989).

8. **Jones, J.A. and Vassilis Christophilos,** "High Efficiency Regenerative Adsorbent Heat Pump," ASHRAE Winter Annual Meeting, Chicago, Illinois (January 1993).

9. **Jones, J.A.,** "Sorption Refrigeration Research at JPL/NASA," Solid Sorption Refrigeration Conference, International Institute of Refrigeration, Paris, France (November 18-20, 1992).

10. **Jones, J.A.,** "Regenerative Adsorption Heat Pump," U.S. Patent #5,046,319, Jet Propulsion Laboratory/California Institute of Technology, Pasadena, California.

11. **Jones, J.A. and Yavrouian, A.,** "Activated Carbon Sorbent with Integral Heat Transfer Device," U.S. Patent Pending (1992).

Table 1. Heat Pump Analytical Comparisons

Sorbent/ Sorbate	2 Canister Max COP_C	4 Canister Orig	4 Canister Bottoming	6 Canister Orig	6 Canister Bottoming	12 Canister Orig	12 Canister Bottoming	Ideal COP_C
C/NH_3	0.71	--	1.02	0.92	1.06	1.01	1.16	1.46
C/R134a	0.61	--	0.80	0.69	0.83	0.75	0.92	1.27
C/H_2O	1.20	--	--	--	1.47	--	--	1.60

Table 2. Measured Cooling Capacities

Sorbate	Total Cooling Capacity (BTU/hr)
R22	386
R134a	337
NH_3	1038

Assumptions:

1. Cooling capacity is measured over a 6 minute period with a 3 minute heating cycle and a three minute cooling cycle.
2. Condenser saturation temperature = 100°F (37.8°C).
3. Evaporator saturation temperature = 40°F (4.4°C).
4. Total carbon weight is 0.51 kg with finned aluminum tube weight of 1.16 kg.

Table 3. Coefficients of Performance for Standard Heating and Cooling Days

Outdoor Temp. (F)	Outdoor Temp. (C)	Heat Pump Mode	COP Standard	COP Mod. #1	COP Mod. #2	Supplied Air Temp. (F)	Supplied Air Temp. (C)
95	35.0	Cooling	1.0	1.3	1.7	55	15.6
82	27.8	Cooling	1.3	1.6	2.1	55	12.8
47	8.3	Heating	1.9	2.1	2.4	105	35.0
17	-8.3	Heating	1.5	1.6	1.8	105	32.2

Note: These values do not include parasitic losses (estimated at about 3%) or electric fan power (estimated at about 5%). CoPs may increase with alternate sorbents.

FIGURE 1. BASIC SORPTION REFRIGERATION CONCEPT

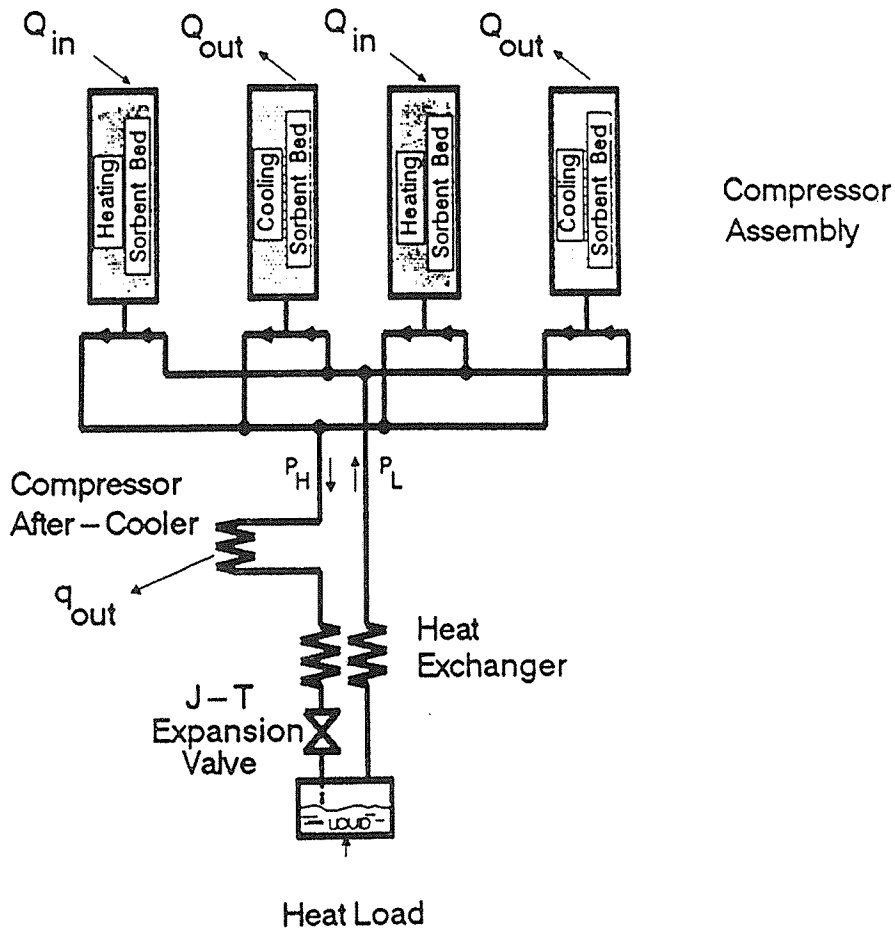

FIGURE 2. SORPTION COMPRESSOR REGENERATIVE THERMAL "WAVE"

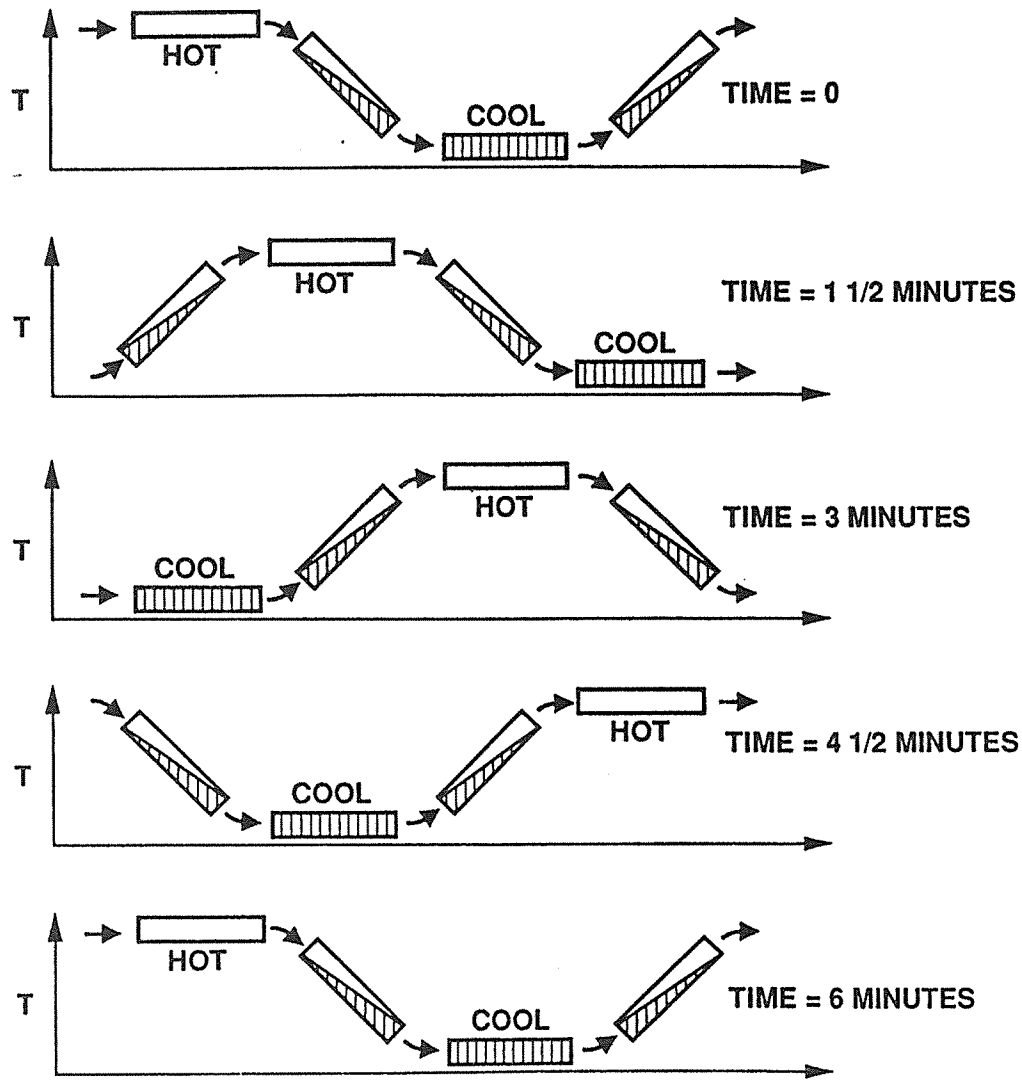

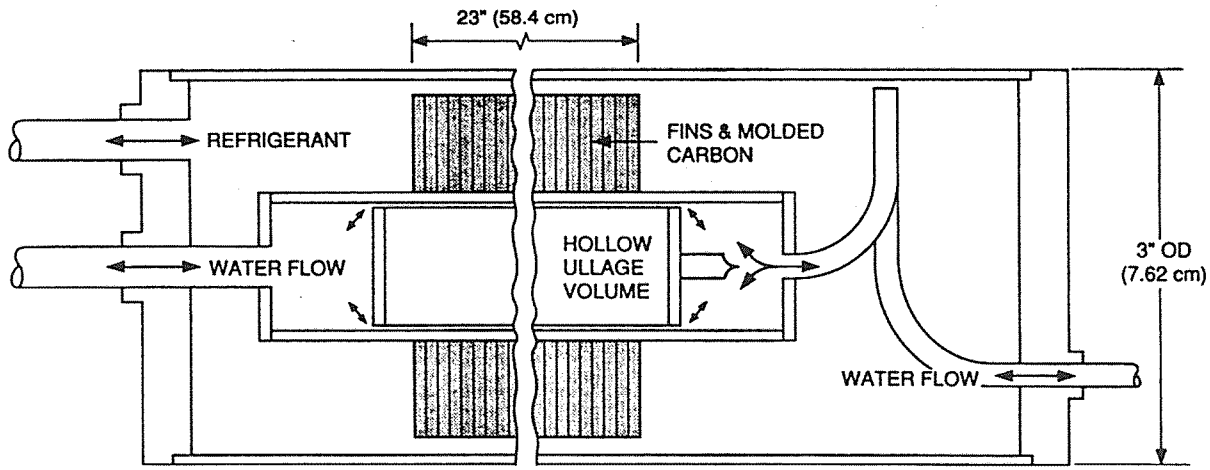

FIGURE 3. SORPTION COMPRESSOR ASSEMBLY CROSS-SECTION

FIGURE 4. COOLANT CIRCUIT DIAGRAM FOR FOUR SORBENT BEDS

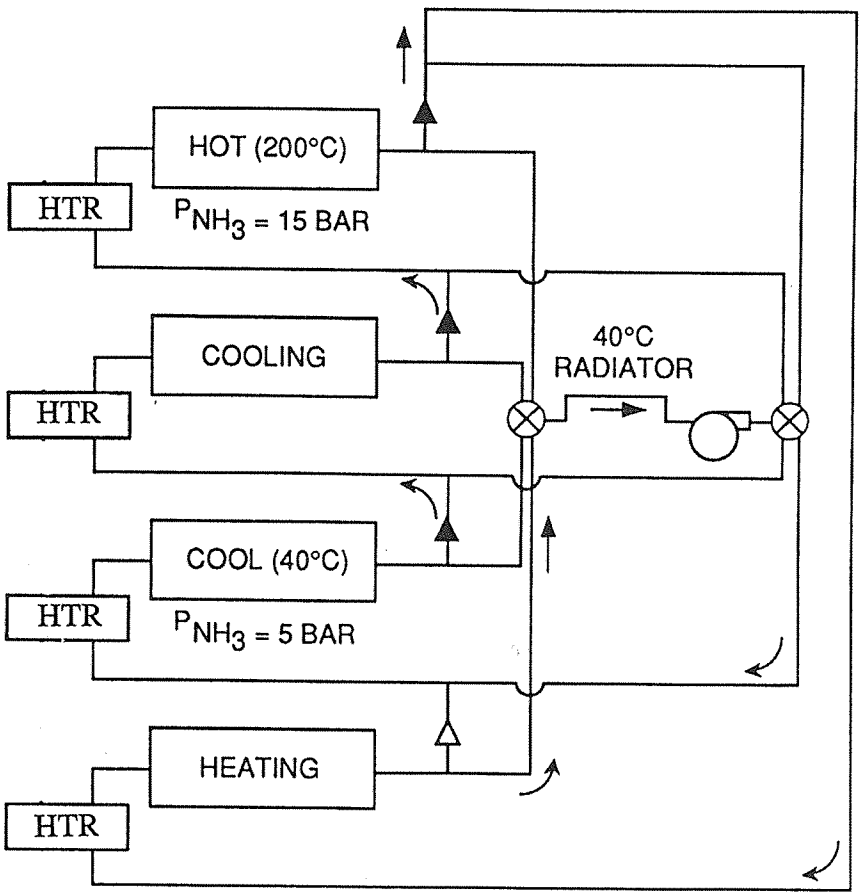

CFC-Free Chemisorption Heat Pumps and Refrigeration

William A. Ryan
Gas Research Institute
8600 W. Bryn Mawr Ave.
Chicago, IL 60631
United States

Technology Description

Background

The widespread use of modern cooling, heat pumping, and refrigeration systems depend on the development, over the last 50 years, of CFC vapor compression cycles. Few engineering developments have experienced the success or had the impact on society of this technology. Modern building have become dependant upon mechanical cooling, and the geographic pattern of population throughout the United States has been altered. Areas previously considered too hot for the establishment of industry and large population centers are now the site of some of the fastest growing cities.

In the face of this success, vapor compression enters the 1990's at a crossroads. The technology has always required large investments in electric sources to cover power needs on hot days. New environmental concerns have significantly increased the cost of this generating capacity in recent years. New fossil fuel plants require emission controls and the future potential for nuclear power appears reduced. In addition, concerns on the ozone depleting potential of the chlorofluorocarbons have led to legislation and the development of alternative refrigerants. Thus far, these new refrigerants have been shown to decrease the efficiency of the vapor compression systems[1], which will merely exacerbate the electric supply problem.

One solution is to look at systems that can utilize a primary energy source directly, without burdening the electric distribution systems. Existing solutions include the classic lithium bromide absorption chiller and vapor compression systems driven by engines or steam turbines. These systems have been in use for decades in large institutional installations. However, the largest market for cooling and heat pumping equipment is for small commercial or residential buildings[2]. Therefore, small systems hold the promise for the largest market share. Due to the need for compactness, efficiency, and low cost, small absorption, adsorption, or engine driven systems also present the greatest research challenge.

Numerous cycles have been investigated in the last decade for applications to small systems including absorption systems[3,4,5], and engine systems. Less conventional

---

[1]How Will CFC Bans Affect Energy Use?, S.K. Fischer, F.A. Creswick, ASHRAE Journal, Nov. 1988, Reprinted in CFC's: Time of Transition, ASHRAE, Atlanta, 1989

[2]The Air Conditioning, Heating and Refrigeration News - Statistical Panorama, March 29, 1993

[3]Development of the Residential Gas Fired Absorption Heat Pump, Allied Corporation, GRI 84-0112, 1984

[4]Development of the Dual Cycle Absorption Heat Pump for Residential Applications, Battelle, GRI-90-0075, 1990, 6 Volumes

approaches include solid vapor systems, in which a refrigerant is sorbed onto a solid material, and later released at a higher pressure when the solid is heated. In this way, a container of the solid acts as a compressor, and the power source can be any type of heating fuel. A number of these systems have been developed in the past including a zeolite solid[6,7] (a form of absorbant clay) which can draw in water refrigerant and activated carbon which can draw in ammonia refrigerant[8,9,10]. Research continues in these areas, but "chemisorption" offers a new alternative to previous solid vapor systems[11]. In chemisorption ammonia is drawn into any one of a number of possible salt materials. The wide choice of available salts, and the different temperatures at which this sorption takes place makes it possible to tailor systems to applications to a far greater degree than was ever previously possible.

Basics

Chemisorption is a solid-vapor adsorption cooling system utilizing ammonia refrigerant. The refrigerant experiences the same evaporation and condensation process as in a conventional cooling system, but the compressor is replaced by a solid mass of ammoniated salt. This salt adsorbs ammonia at low pressures. When heated, the salt desorbs ammonia at high pressure, thereby acting as a "compressor".

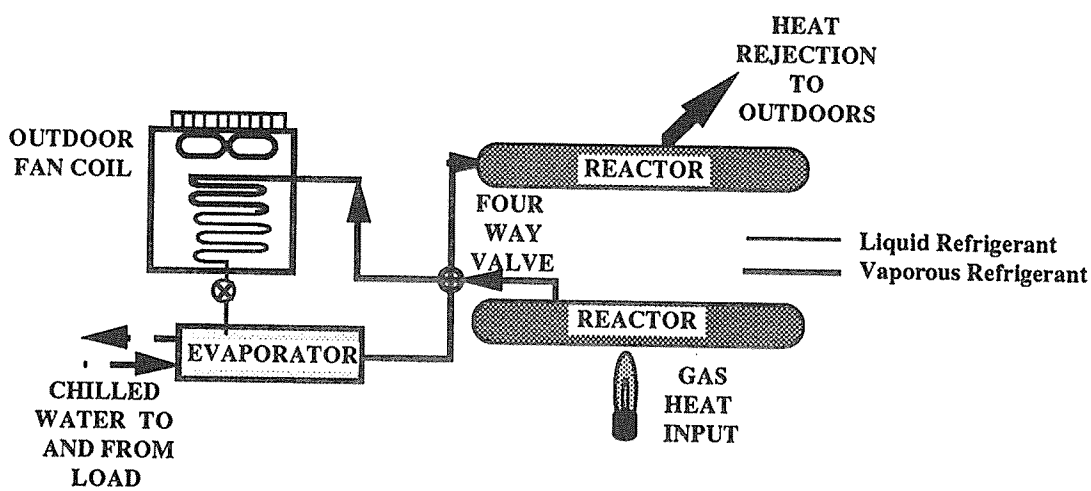

Figure 1 - A Simple Single Effect Chemisorption Air Conditioner

---

[5]Development of the Double Effect Air Conditioner Heater (DEACH), GRI-92-0205, 1992, 3 Volumes

[6]Closed Cycle Zeolite Regenerative Heat Pump, from Solar Engineering, D.I. Tchernev and J.M. Clinch, ASME, Book No. H00467-1989

[7]Absorption Cycles with the Working Fluid Zeolite/Water, J. Schwartz, C. Keller, J. Soltes, ASHRAE Transactions, 1991, NY-91-6-1

[8]Gas Fired Sorption Heat Pump Development, Miles, Sanborn, Nowakowski and Shelton, Solid Sorption Refrigeration Symposium, Paris, 1992

[9]Sorption Refrigeration Research at JPL/NASA, J.A. Jones,Solid Sorption Refrigeration Symposium, Paris, 1992

[10]Gas Fired Solid-Vapor Heat Pump Development, D. Sanborn, D. Miles, G. Nowakowski and S. Shelton, 1992 International Gas Research Conference, Tokyo, 1992

[11]Complex-Compound Heat Pump : Topical Report on Phase 1 Results, GRI93/0113 Rocky Research, Inc., 1993

A simple chemisorption cycle might appear as in Fig 1. In this cycle, heat is used to drive the ammonia refrigerant out of the ammoniated salt. The ammonia is then condensed in an air cooled coil, reduced in pressure, and evaporated producing a cooling effect. The low pressure ammonia vapor is then adsorbed into a second salt adsorber. In this simple cycle, both adsorbers contain the same salt, and the heat of adsorption is rejected. Once all the ammonia is passed from one adsorber to the other, the heat source switches to heating the full adsorber, the four way valve switches and the cycle continues.

Liberating ammonia refrigerant from an ammoniated salt does require more heat than freeing refrigerant in other solid-vapor systems. This is due to the relatively tighter bonding in the ammoniated salt complex. Therefore, in a simple adsorption/desorption cycle, efficiency would be relatively poor. However, with the variety of salts available, more efficient cycles can be utilized. Different salts adsorb and desorb ammonia at differing temperatures. Curves for a variety of compounds have been experimentally measured.

Coordination Spheres

A specific salt will adsorb or desorb at a specific temperature over an entire "coordination sphere" If a salt has three "coordination spheres", this means that ammonia can array itself around the salt in three ways. The first molecules of ammonia form a "shell" or "coordination sphere" around the salt molecule. If more ammonia molecules are added once the first shell is filled, they arrange themselves further from the salt in a second coordination sphere. Some salts may form as many as three of these coordination spheres at increasing distances from the salt.

Monovalence

In conventional absorption cycles, absorption temperature changes with solution concentration. Conversely, in chemisorption, all molecules of ammonia in one coordination sphere are bound to the salt with equal force and therefore, absorb at a constant temperature. This means that chemisorption cycles behave like a vapor compression cycle with a constant suction and discharge pressure from the sorbers.

Flexibility

A large number of chemisorption salts are known and more a presently under development. In addition, each salt may operate over as many as three different temperature-pressure curves, one for each coordination sphere. This gives chemisorption tremendous flexibility in application.

High Efficiency Chemisorption Cycles

High efficiency chemisorption cycles rely on this flexibility. To obtain high efficiency, more than one salt is used in a single cycle. With differing adsorption and desorption temperatures, heat input to the cycle can be used more than once. Figure 2 shows such a cycle referred to as a Constant Pressure Engine Stage (CPES) cycle. In this cycle, heat is provided by a boiler to the high temperature adsorber which is desorbing. At the same time, the medium temperature adsorber is adsorbing. This heat of absorption is fed to the desorbing low temperature adsorber.

Once all the ammonia is driven to the medium temperature adsorber, the boiler is shut down. The high temperature and low temperature adsorbers now adsorb ammonia. Heat from the high temperature adsorber is rejected to the medium temperature adsorber. This powers the desorption process. The heat of absorption in the low temperature adsorber is rejected.

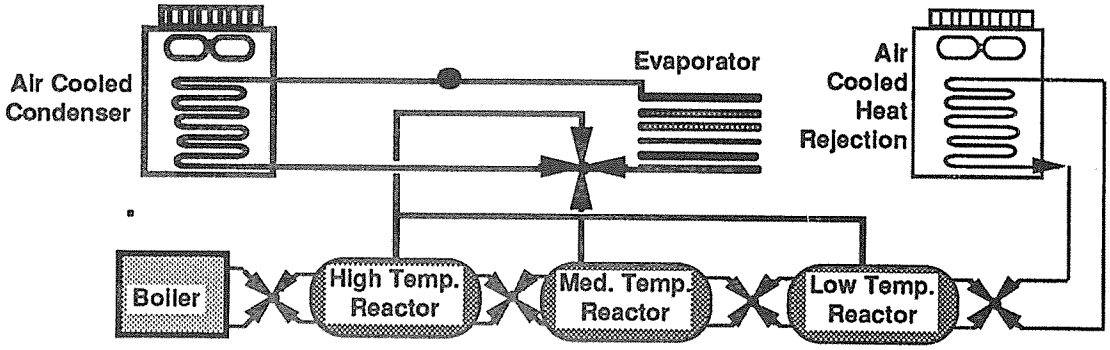

FIGURE 2. - The CPES Cycle

In this way, three adsorbers can provide continuous cooling and heat input is used three times before rejection. This unique hardware configuration, however, is not limited to 3 stages. Any number of stages can be used. All cooling is provided by phase change in one evaporator. This simplifies system packaging and integration. Current developments focus on two and three stage cycles for commercial applications.

Application

Chemisorption is currently seen to be applicable to;

- o Air Conditioning Systems to 100 tons
- o Space Heating and Cooling Heat Pumps
- o Refrigeration and Freezing
- o Thermal Storage Systems
- o Ammonia Clean-Up Systems for Process Applications

Benefits

The advantages of chemisorption systems in refrigeration and cooling or heat pumping applications are

- o uses a non-CFC and chlorine free refrigerant with no ozone depletion potential,
- o faster rates of adsorption and higher adsorption capacity than from any previously explored solid-vapor system, meaning smaller, lower cost equipment,
- o the ability to tailor the reaction to the temperature requirements of the system by using any of numerous salts,
- o the ability to assemble high efficiency cycles by using a variety of salts that adsorb and desorb at differing temperatures,
- o upon system shutdown, the bulk of the ammonia goes into the ammoniated salt form and is not free to escape, making systems "fail-safe", and
- o chemisorption systems have no moving parts other than control valves, potentially making chemisorption a durable system.

Technical Issues

Development Status

Development of the chemisorption concept to date includes;

- o definition of the desired cycles,
- o construction and optimization of small scale sorbers with salts selected for a wide variety of cycles,
- o cycling testing of these small sorbers to establish durability,

- o corrosion testing of the salts on absorber surfaces in ammoniated form,
- o construction of very large sorbers for industrial applications including the recently commercialized Amvac ammonia storage system and for the upcoming field test of the DOE chemisorption industrial heat pump
- o design and construction of a simplified sorber sized for residential and light commercial systems,
- o development and testing of interstage coupling systems, and
- o initial breadboard construction.

A breadboard of a two stage CPES heat pump breadboard will be completed this fall.

Issues to be Determined

Research will continue on the following points;

- o testing of the two stage breadboard in the fall of 1993,
- o expansion of the breadboard to a 3 stage CPES in 1994,
- o controls systems for a CPES system,
- o long term durability testing of prototype systems, and
- o field testing of prototypes.

Economics

The largest potential market for the application of chemisorption is in cooling and heating of commercial and residential buildings. A chemisorption cycle can act either as a reversible heat pump or purely as a cooling system.

The following economic analysis compares chemisorption as a reversible heat pump, producing heating in the winter and cooling in the summer to a high efficiency conventional system. The parameters in this comparison are;

	Chemisorption	Conventional System
Type (Cooling)		High Eff. Electric AC
COP Cooling	1.0	3.52
Equivalent SEER	3.4	12
Parasitic Power(Cooling)	300w/ton	None
Type (Heating)		Cond. Gas Furnace
COP Heating	1.5	0.90
Parasitic Power (Heating)	320w/20 MBH	130w/20 MBH
Heating Capacity Required	20 KBH/ton cooling	20 KBH/ton cooling

The two most important variables in the economics of this or of any gas fired heating and cooling system are the the ratio between electric and gas prices and the climate of the application. The electric to gas price ratio varies from year to year and from location to location. Therefore, to make the economic analysis most useful, it should account for a wide range of price ratios and climates.

Heating and cooling total costs vary throughout the US. To make the analysis as simple and universal as possible, the following results are shown as the percent annual savings over the year.

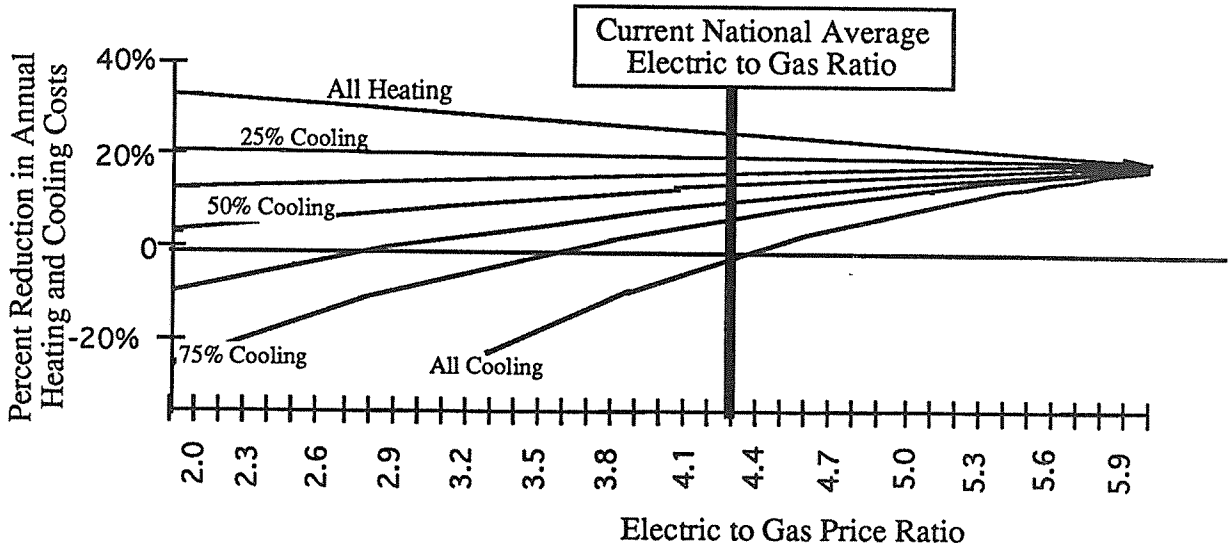

Technology Outlook

The development of chemisorption has, thus far, proven to meet the original expectations for the concept in all significant respects. Should the development of complete system breadboards and prototypes be equally successful, prototypes could be in field test by 1996.

The introduction of a novel mass market product is a considerable undertaking. With field testing and long term durability testing in 1996-97, it is possible that the product could be introduced to the residential and light commercial heating and cooling market in 1998.

The build-up of sales of a new type of cooling and heat pumping system will take a number of years. Large volume sales should not be expected before the middle of the first decade of the next century.

American residential and commercial air conditioning and heat pump products currently use HCFC-22. This "transition" refrigerant is not expected to be phased out until the beginning of the next century (35% reduction-2004, 65% reduction-2010[12]). Therefore, the chemisorption development, if successful, will produce a replacement for central air conditioning and heat pump systems at the point in the future where such a replacement will be required.

---

[12]Copenhagen 1992: a Revision or a Landmark?, L.J.M. Kuijpers, The International Journal of Refrigeration, Vol 16, No. 3, 1993

STATUS OF THE DEVELOPMENT OF THE HYDRAULIC REFRIGERATION SYSTEM (HRS)

by

Kent L. Whitfield
Byard D. Wood
David S.C. Chau
Liang-Jun Ji
Warren Rice
George C. Beakley

Center for Energy Systems Research
College of Engineering and Applied Sciences
Arizona State University
Tempe, Arizona 85287-5806
(602)965-2886 FAX (602) 965-0745

May 16, 1993

Technology Description

The hydraulic refrigeration system (HRS) is essentially a synthesis between the hydraulic gas compressor and a vapor compression refrigeration cycle. Devices utilizing hydraulic compression in general, and specifically hydraulic gas compression, have been in existence since antiquity. In these devices, a gas is entrained in a downward liquid flow. The gas is compressed as a consequence of increased hydrostatic head as the gas bubbles move downward. Schulze (1954) documented the history of hydraulic air compression and provided performance, construction, and operation data for compressors built between 1896 and 1910. Rice (1976) presented a one-dimensional bulk parameter analytical model of hydraulic gas compressors which was used as the foundation for his later work on the hydraulic refrigeration system.

The hydraulic refrigeration system is a vapor compression refrigeration system which uses a vertical liquid loop and a liquid pump to provide circulation of the carrier liquid and compression and condensation of the refrigerant. The first modeling of a HRS was presented by Rice (1981) and since that time the HRS has been the subject of much analytical and experimental effort. As shown in Figure 1, superheated refrigerant vapor from the evaporator is entrained into a downward liquid flow at the top of the closed liquid loop at location (1). As the refrigerant bubbles travel downward they are gradually compressed. The compression process is energy efficient because it is nearly isothermal at the liquid temperature. For a particular choice of refrigerant, carrier liquid, and loop operating temperature range, the vertical height of the liquid loop is determined so that condensation of the refrigerant is achieved at the end of the compression process (2). After condensation is complete, the refrigerant is gravitationally separated from the carrier liquid in a separation chamber (3), as shown in Figures 2 and 3. Following separation, the carrier liquid is pumped to the entrance of the up flow pipe at (5), and the refrigerant passes through the expansion valve and enters the evaporator portion of the cycle (4) where heat is removed from the refrigerated space (Qe). After leaving the evaporator, the refrigerant is a vapor and travels to the entrainer (1) and the process is repeated. Constant temperature of the closed liquid loop is provided by an annulus-type heat exchanger (6). The closed loop carrier fluid travels through the center pipe of the heat exchanger to minimize pressure drop while cooling tower water flows through the annulus to remove the water loop heat load. The main heat load of a HRS is the result of work of refrigerant compression, heat of refrigerant condensation, and pumping inefficiencies. With regard to the thermodynamic cycle, the heat exchanger provides heat rejection to the environment (Qc). Work input to the cycle is provided by a pump which circulates the carrier liquid around the loop (Wp). Cooling capacity is the heat input to the system (Qe) at the

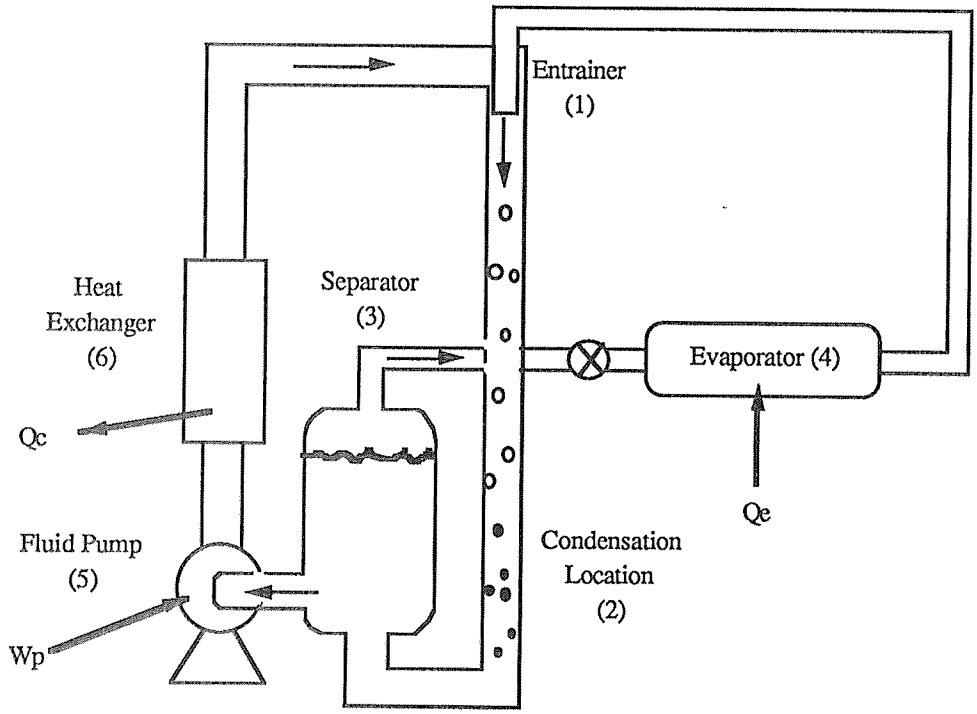

Figure 1. Simplified hydraulic refrigeration system schematic

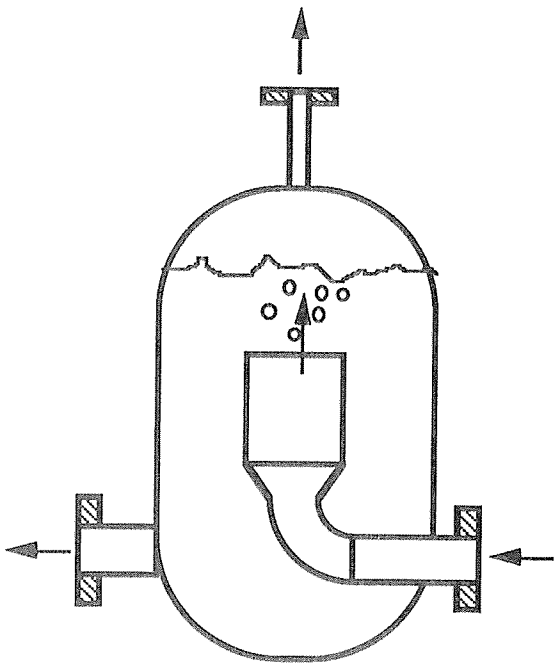

Figure 2. Vapor-liquid separator

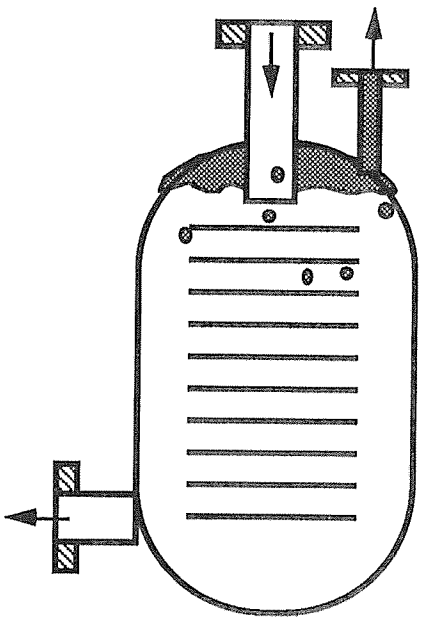

Figure 3. Liquid-liquid separator

evaporator. Regeneration (in which vapor from the evaporator is used to subcool liquid refrigerant from the separator) may also be included in the cycle, but is not discussed here.

Analytical models of the HRS have suggested that a 6" diameter pipe loop 100 feet tall will provide the necessary compression and refrigerant flow rate for a nominal 9 ton system, at Air-Conditioning and Refrigeration Institute standard rating condition. The HRS can be multi-staged, i.e., in two 50 foot, or three 35 foot sections, to provide the same resultant compression and refrigeration capacity. In an experimental 3-stage HRS presently under construction, water is used as the carrier liquid and n-butane is the refrigerant.

Application

The HRS is currently envisaged for use in industrial applications in which the refrigeration system utilizes an indirect (low probability) system classification (ANSI/ASHRAE 15-1989). Because hydrocarbons pose certain flammability hazards, several conditions have been taken into account that help to ensure safety of the HRS design. First, with n-butane as the refrigerant, the compression process will take place at low pressure (≈ 40 psia) and at a very low temperature (≈ 85°F) relative to its ignition point. Second, the mass ratio of water to n-butane exceeds 100:1 in the process of the compression cycle. Finally, by using a chiller circuit for the evaporator, heat removed from the refrigerated space can be transported by chilled water, allowing the all-butane circuit to be remotely housed in a mechanical room.

Current guidelines, such as ANSI/ASHRAE 15-89 are fairly specific about the conditions in which a group 3a refrigerant can be used and meet code requirements. As a consequence, at the present time, the HRS, with water as the carrier liquid and n-butane as the refrigerant, can only be approved for use in an industrial setting. Experience with the HRS, future legislation, and code revisions may ease these restrictions.

The HRS is a generic refrigerator and can technically satisfy any refrigeration application. Ultimately it could be widely used for air conditioning, chilling, cold energy storage and freeze desalination.

Benefits

The HRS offers the following advantages:

- Since the system can use group 3a refrigerants safely, the HRS will not be ozone destructive and therefore will be more environmentally friendly than systems using either CFC's, HCFC's or HFC's.

- Components are commonly available, simple and reliable. Low system maintenance and high reliability are primarily dictated by the simplicity of the system components.
- Due to the abundance and low cost of n-butane, as well as the inherently low maintenance requirements of the systems, the HRS will be a very important technology to developing countries.

Analytical, as well as some experimental evidence, has shown that a nominal 3 ton unit operating with three compression stages will have an energy efficiency rating (EER) of 19 at ARI standard rating conditions. Since the HRS has the capability of operation over a range of refrigerant mass flow rates, this same system when operating at a capacity of 9 tons will have an EER of approximately 10. Rice and Beakley (1992) investigated the parametric performance of the HRS. They showed how changes in refrigerant and water mass flow rate, height of the HRS, and rates of refrigeration are related to EER.

Technical Issues

The technical issues and problems that need to be addressed in maximizing the efficiency of the HRS include loop pump configuration, nature of the carrier liquid, and separator design.

The HRS requires the use of a large volume flow rate and low pressure differential of the carrier liquid. Centrifugal pumps, while readily available, do not have good efficiency for these flow conditions and are therefore not the best choice for use in a HRS. An axial flow pump would be suitable, but is not readily available at present. For this reason, one goal of the current research and development effort is to pursue the design of an axial flow pump or the functional equivalent.

If the compression medium is water, a maximum of approximately 1 psi of compression is obtained per 28 inches of downward bubbly flow travel. Increases in the local vapor fraction will, of course, result in reduced pressure rise and an increase in the two-phase friction factor. This necessarily results in a compression loop with moderately large height dimensions. As a result, n-butane is an ideal refrigerant choice because vapor to liquid phase change occurs at low pressure (40 psia) and low temperature (85°F). However, even at this low pressure, modeling as well as experimental work concludes that a single water loop 100 ft tall, or three loops 35 ft tall, are necessary for condensation at 85°F. Multi-staging adds substantially to initial costs of the system. Consequently, a water additive or a more dense carrier liquid will be sought so that the height requirements of a HRS can be reduced. Height reduction would also aid in marketability in areas where the system visibility would pose an esthetic problem, or where below ground installation is not viable.

With regard to the liquid-liquid separator, the goal is to maintain a high separation efficiency with a small overall pressure drop. Because the buoyant effects are much less effective in separating liquid refrigerant from water, the plate-type separator (see Figure 3) must be approximately one and a half times the volume of the vapor-liquid separator.

Economics

A single-stage HRS will be less expensive to build than a multi-stage unit for the same tonnage. In many, if not most, real world commercial applications of the HRS, the height will not be a limiting factor, and a single-stage system can be used. It now appears that the HRS will be very competitive with regards to both performance and first cost with the new HCFC and HFC refrigeration systems.

The HRS presently under construction reflects conservative design criteria, and little consideration is being given to optimizing future manufacturing costs. Also, this unit is fully instrumental for experimental purposes, which is an added expense that will not be present in manufactured units.

As operational experience is gained by running the prototype, new design criteria will become apparent that will result in significant component cost reductions. When the concept of the HRS is examined, the simplicity of the system intuitively leads to the conclusion that costs will be competitive with existing technology on a first cost basis. When life cycle costs are factored in, the HRS should show an impressive cost saving over present equipment. The greater efficiency of the HRS reduces the cost and demand for electricity which, in turn, reduces the environmental impact of electric power production. The use of a naturally occurring refrigerant could eliminate the production of complex chemical compounds presently being used or promoted as refrigerants. This, too, would reduce considerably environmental stress.

Technology Outlook

At this time all components of the HRS are accessible with current technology. Improvements in individual components, however, are inevitable and necessary to further increase the system performance. A substantial amount of seasonal performance experimentation is also desirable.

The development of the HRS is well past the feasibility stage and now has entered a performance evaluation and re-design stage. Two small capacity systems have been previously constructed, an 85 foot single-stage system and a 35 foot three-stage system. Both HRS systems used R-114 as the refrigerant and water as the carrier liquid. Based on the encouraging

performance of these systems, a larger capacity three-stage HRS is now being built. This larger system, which uses 6" diameter pipe, will use n-butane (R-600) as the refrigeration fluid, water as the carrier liquid, and will be capable of capacities of up to approximately 10 tons. Based on the operation of this version (Phase 1), a Phase 2 large capacity HRS system (perhaps 35 to 50 tons) will be constructed. After this phase of development, pre-production field test models will be built and operated in different climatic locations. It is estimated that each phase of development will require approximately two years time depending on availability of funds.

Another aspect of cost reduction that needs to be examined is the expected reliability of the HRS. With only pumps and motors as the mechanical components of the system, maintenance-free operation for long periods of time is assured. This not only translates into reduced replacement costs but into reduced downtime and less expensive service personnel. The cost of repair parts that must be kept in inventory will be a fraction of that required by present equipment. Costs associated with training of service personnel will be much less because of the simplicity of the system.

References

Schulze, Leroy E. 1952. "Hydraulic Air Compressors," Information Circular 7683, Unites States Department of the Interior, December.

Rice, W. 1976. "Performance of Hydraulic Gas Compressors," Journal of Fluids Engineering, Transactions of the ASME, Vol. 98, Series 1, December, pp. 645-653.

Rice, Warren 1981. "Calculated Characteristics of a Hydraulic Refrigeration System," Journal of Energy, American Institute of Aeronautics and Astronautics, Vol. 5, No. 6, November-December, pp. 323-330.

Rice, Warren and Beakley, George C. 1992. "Characteristics of the Hydraulic Refrigeration System (HRS) Using n-butane as the Refrigerant," Energy Conversion and Management, Vol. 33, No. 10, pp. 943-950.

MALONE REFRIGERATION

Gregory W. Swift
Condensed Matter and Thermal Physics Group
Los Alamos National Laboratory, Los Alamos, New Mexico 87545 USA

ABSTRACT

Malone refrigeration is the use of a liquid near its critical point, without evaporation, as working fluid in a regenerative or recuperative refrigeration cycle such as the Stirling and Brayton cycles. It's potential advantages include compactness, efficiency, an environmentally benign working fluid, and reasonable cost. One Malone refrigerator has been built and studied; two more are under construction. Malone refrigeration is such a new, relatively unexplored technology that the potential for inventions leading to improvements in efficiency and simplicity is very high.

TECHNOLOGY DESCRIPTION

As recently as 10 years ago, only a few experts appreciated the disastrous consequences of stratospheric ozone depletion by manufactured halogenated chemicals such as chlorofluorocarbons (CFCs). Of the common uses of CFCs, the use as a refrigerant in refrigerators and air conditioners has been the most difficult to eliminate, in part because CFC-based cooling systems are reasonably efficient. Cooling systems use about 20% of the nation's electricity, most of which is produced by burning fossil fuels; clearly cooling-system efficiency has a major greenhouse-gas impact. These concerns are stimulating research into a variety of alternative cooling technologies.

One new cooling technology is Malone refrigeration, the use of the cooling accompanying the expansion of a liquid, without evaporation. We chose the name Malone refrigeration in honor of John Malone (1880-1959), who invented heat engines that use the expansion of liquids without evaporation.

Our intuitive sense of how liquids behave is no doubt based on our widespread experience with the most common liquid of all, room-temperature water. But, unlike room-temperature water, liquids just below the critical point have thermophysical properties that are well suited to use in a regenerative or recuperative thermodynamic cycle such as the Stirling cycle. One important property that a single-phase refrigerant must have is an adequately large thermal expansion coefficient β, because the heat absorbed during isothermal expansion is proportional to β [via Maxwell's relation, $(\partial s/\partial p)_t = (\partial \rho/\partial T)_p$]. Ideal gases have $T\beta = 1$; liquids have $T\beta \sim 1$ over a substantial range of temperature, just below the critical temperature. The solid lines in Fig. 1 show values of $T\beta$ for CO_2 over a range of temperature and pressure. Plots of $T\beta$ for all liquids -- water, hydrocarbons, CFCs, even

liquid metals -- are similar to that of CO_2, when plotted against coordinates normalized by the critical temperature T_{crit} and critical pressure P_{crit}. Thus, for a wide range of temperature near and below T_{crit}, $T\beta$ is large enough to make liquids useful single-phase refrigerants.

A second important property is the isothermal compressibility κ_t. The dashed lines in Fig. 1 show $P\kappa_t$ for CO_2 over the same range of P and T. Again, the values are similar for other liquids. For ideal gases, $P\kappa_t = 1$; liquids have $P\kappa_t < 0.1$ in the range where $T\beta \sim 1$. This low compressibility gives liquids several advantages (particularly in comparison with ideal-gas-Stirling refrigerators). Most importantly, it keeps adiabatic temperature changes and attendant losses low. Additionally, it enables large pressure changes (to which cooling power is proportional) to be achieved with modest fractional volume changes of the liquid. This feature can be put to practical use in two ways: cylinders and associated mechanical components can be simplified and made smaller, and/or more fluid volume can be permitted in the heat exchangers and regenerator.

Next, we consider the volumetric specific heat at constant pressure, ρc_p, which is much larger for liquids than for gases, because the density is much larger. Liquid's volumetric specific heat, times a mere 1°C temperature change, is even larger than the latent heat per unit vapor volume of conventional CFC refrigerants. This leads to a great, qualitative difference between heat exchangers for liquids and those for gases or gas-liquid mixtures. To transfer a given amount of heat from a liquid requires less volumetric displacement of the liquid through the heat exchanger, so that less mechanical power is required to pump the liquid through the exchanger. Also, the exchanger can be made very small if it exchanges the heat to another liquid stream.

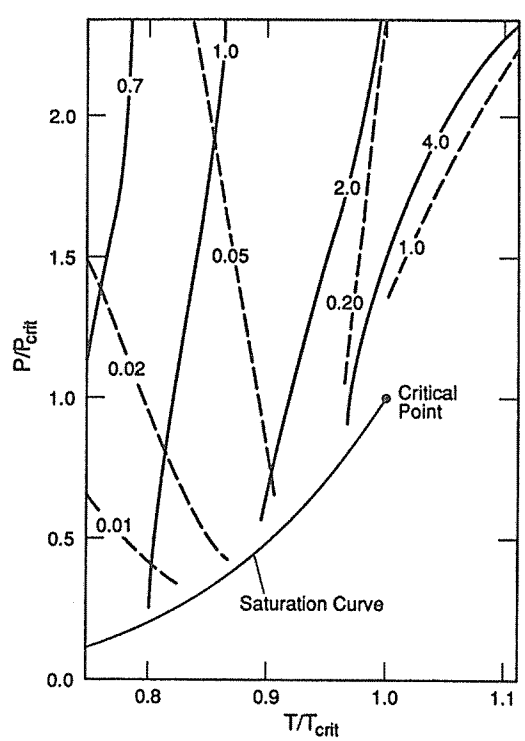

Fig. 1. Selected thermophysical properties of liquid CO_2, for which T_{crit} = 304 K and P_{crit} = 74 bar. ——— $T\beta$, where β is thermal expansion coefficient; - - - - $P\kappa_t$, where κ_t is compressibility. In most of the region shown, the thermal expansion coefficient is comparable to that of an ideal gas, but the compressibility is much smaller.

Liquids are thermodynamically effective just below their critical temperatures. Most simple hydrocarbons, fluorocarbons, and chlorofluorocarbons, with critical temperatures somewhat above room temperature, are effective as liquids near room temperature. We list only a few here. CO_2 is most attractive, because it is nontoxic, nonflammable, and environmentally acceptable. But its critical temperature (304.2 K) is a little too low for highest efficiency operation. Dilute solutions of methyl alcohol, ethyl alcohol, acetone, or SO_2 in carbon dioxide have higher critical temperatures and hence greater inherent efficiency, but sacrifice some safety. SF_6 and various ozone-safe fluorocarbons including C_3F_6, perfluorocyclobutane, and HFC-134a, and mixtures thereof, also have appropriate critical temperatures, and can be used at lower pressures than carbon dioxide; however, these are less attractive because they are moderately toxic and/or are greenhouse gases. Propane and propylene are also attractive except for their flammability.

The first experimental Malone refrigerator[1], built and studied at Los Alamos in the 1980s, was designed for systematic study of the use of liquids in a Stirling cycle. We used liquid propylene (C_3H_6; T_{crit} = 365 K, P_{crit} = 45.6 bar) at an average pressure of 100 bar and at temperatures near room temperature, just below its critical temperature. The machine was water cooled, and operated at speeds up to 5 Hz, with heat flows up to about 1 kW, temperature differences up to 30 K, and shaft powers up to a few hundred watts.

This apparatus, shown schematically in Fig. 2, was designed for versatility, understandability, easy diagnostics, and easy modification, without much concern for its efficiency, size, cost, or reliability. Hence it included several features that would never be found in a practical device. The piston and displacer strokes and time phasing between them, which controlled

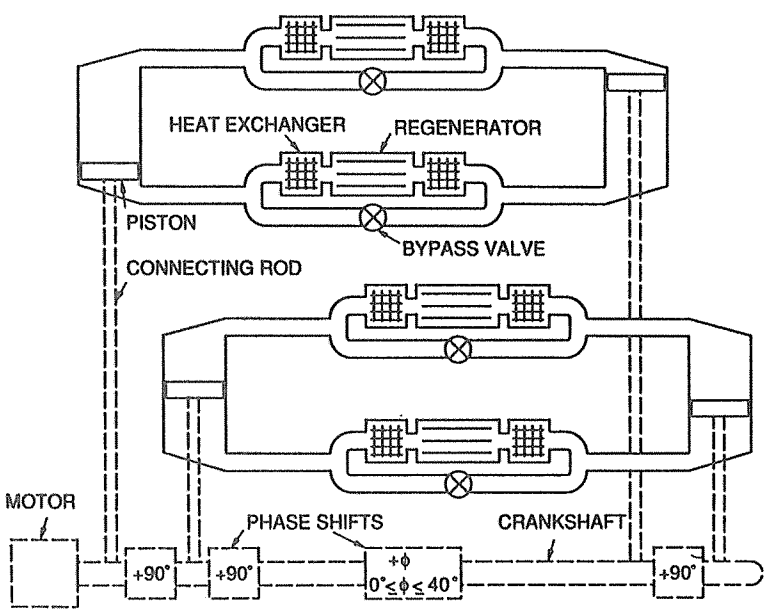

Fig. 2. Schematic of principal components of the first experimental Malone refrigerator. Four regenerator-heat-exchanger assemblies and four double-acting pistons were combined to form four refrigerators operating in parallel, running 90° out of phase from one another on a common crankshaft.

propylene displacement and pressure changes, could be adjusted using mechanisms within the crankshaft. Also, valves were connected in parallel with heat exchangers and regenerators. By opening these valves we could let the propylene bypass the heat exchange components, to distinguish between thermodynamic and frictional effects in operation. The engine was instrumented very extensively.

Generally, measurements of thermodynamic effects agreed with calculations based on component geometry and known properties of propylene; for example, the heat pumped at zero temperature difference was equal to $\pi T \beta f P_a V_a$, where f is frequency and P_a and V_a are the amplitudes of the pressure and volumetric displacement. At its most efficient operating point as a heat pump, the first Malone refrigerator had a second-law efficiency of 0.2, not including motor inefficiency. These results are discussed in detail in Ref. 1.

APPLICATION

Because of the high heat capacity per unit volume of liquid working fluids, we expect Malone refrigeration to be most compact when heat source, heat sink, or both are also liquids, such as water. Hence, the most probable applications would include ground-coupled heat pumping and assorted medium- and large-scale refrigeration, air-conditioning, and heat pumping applications such as air conditioning of large buildings.

BENEFITS

Malone refrigeration is environmentally benign. It's working fluid, CO_2, is a substance that occurs naturally in quantities so large that the impact of its use by the refrigeration industry would be negligible. (We each exhale 2 pounds of CO_2 per day!) Methanol or ethanol mixed with the CO_2 would also be used and released in quantities far smaller than are used in other industries. Materials and fabrication techniques used to build Malone refrigeration systems are also environmentally benign.

When used in a liquid-to-liquid application such as water-cooled water chilling, Malone refrigeration systems should be much more compact than vapor-compression systems, because of the small size of the heat exchangers.[2]

The first Malone refrigerator, which was not optimized in any way, had a second-law efficiency of 0.2, not including motor inefficiency. Our present design calculations for larger, free-piston systems show that the second-law efficiency can be over 0.4, including motor inefficiency, in low-cost designs with mass no greater than 10 kg/kW, comparable to the values of today's large-scale vapor-compression water-cooled water chillers. The second-law efficiency of the fundamental cycle[2] is in the range 0.6 to 0.8, so that efficiencies approaching this range appear possible for large, complex systems costing significantly more than today's vapor-compression systems.

TECHNICAL ISSUES

The most important immediate technical challenge is the demonstration of a Malone refrigerator with efficiency comparable to that of conventional

cooling systems, in an embodiment that is reasonably simple.

If that challenge is successfully met, a large number of additional problems remain to be solved. Some are general; others will be very application-specific. We list a few representative examples here.

The best thermodynamic cycle for Malone refrigeration has not yet been determined. Allen et al.[3] list Brayton, Stirling, Malone, and Stirling-Malone as candidates, but each has at least one practical disadvantage, such as the need for automatic valves (B?, M, SM), the difficulty of building high-effectiveness high-pressure counterflow heat exchangers (B, M), the need to keep total entrained fluid volume small (S, M, SM), and inability to locate heat exchangers remote from mechanical components (S, M, SM).

Details of regeneration when the fluid's specific heat per unit mass is pressure dependent are not well understood.

Design of low-cost heat exchangers that take advantage of the Malone refrigerator's potential for compactness without risk of plugging or fouling of the water passages appears challenging.

A much better design technique than that outlined in Ref. 1 is needed.

Understanding of tradeoffs in choice of mechanical configuration is required. The multiplicity of gas-Stirling configurations, each offering different advantages of simplicity, vibration balancing, torque smoothing, compactness, hermeticity, etc., is indicative of the complexity this issue holds for Malone refrigeration.

The best working fluid may be a mixture of environmentally benign fluids; if so, thermophysical properties (especially viscosity and thermal conductivity) of such mixtures at pressures above vapor pressure are probably not yet available.

ECONOMICS

We expect the production costs of Malone refrigeration systems to be comparable to those of existing refrigeration systems. The design calculations on which our new small Malone cooler (see below) are based predict that large systems, with second-law efficiencies over 0.4, have system masses of about 10 kg/kW, comparable to those of large vapor-compression systems. The materials used are commonplace and inexpensive: mostly steel, with some stainless steel and motor materials such as copper. Fabrication techniques we are using are straightforward, and requirements on dimensional tolerances are modest.

TECHNOLOGY OUTLOOK

It is sobering to consider how many decades of work have been required to bring CFC-based Rankine-cycle refrigeration to its present state of maturity; a tremendous amount of engineering development must be done to bring any new technology to a similar state.

The Los Alamos propylene machine was the first Malone refrigerator. Second prototypes are now under construction at Los Alamos and at the Naval Surface Warfare Center at Annapolis.[4] Funding levels permit less than one full time person to work on each of these projects.

At Los Alamos, the new Malone refrigerator will use CO_2 or CO_2-alcohol as working fluid. We picked the Stirling cycle instead of the Brayton cycle to avoid difficult construction of the Brayton's counterflow heat exchanger and expander, even though it is much easier to calculate performance of a Brayton system and it seems likely that the Brayton cycle would permit higher efficiency. We picked the linear, free-piston configuration to eliminate bearings subject to high forces. We chose a hermetic design since the operating pressure will be well above 100 bar and CO_2's viscosity is 10 times lower than that of water. We are constructing a small machine, to operate near 5 Hz at up to 2 kW of cooling power.

At Annapolis, the much larger Malone machine under construction will use CO_2 as working fluid in a Brayton cycle, with cooling power up to 40 kW.

REFERENCES

1. G. W. Swift, "A Stirling engine with a liquid working substance", J. Appl. Phys. 65, 4157 (1989).

2. G. W. Swift, "Malone refrigeration," ASHRAE Journal, November 1990, p. 28.

3. P. C. Allen, D. N. Paulson, and J. C.Wheatley, "Some heat engine cycles in which liquids can work," Proc. Nat. Acad. Sci. U.S.A. 78, 31 (1981).

4. Tom Gilmour, private communication.

THERMOELECTRIC COOLING TECHNOLOGY

B. Mathiprakasam
Midwest Research Institute
425 Volker Boulevard, Kansas City, MO 64110
Phone: 816-753-7600 FAX: 816-753-8420

Increased awareness of the impact of chlorofluorocarbons (CFCs) on the global environment has become the impetus in the search for alternative cooling technologies and alternative refrigerants for the vapor compression technology. The cooling industry is concerned that the alternative refrigerants currently under development could still face some tough regulations in the future. Therefore, the industry is looking for alternative cooling technologies that do not apply the vapor compression cycle.

There are a number of cooling technologies that are alternatives to the vapor compression technology. One of them is known as Thermoelectric (TE) technology. This paper describes the various aspects of this technology.

TECHNOLOGY DESCRIPTION

TE cooling technology is based on the well-known principle, Peltier Effect. When two dissimilar conductors are connected and a direct current (DC) is passed through the circuit, then the temperature of one of the junctions (of dissimilar conductors) will decrease and that of the other will increase. Since one junction is colder than its environment, it is capable of absorbing heat from that environment. Similarly, the other junction is hotter than its environment and thus is capable of rejecting heat to this environment. The DC power applied to the circuit is also converted into heat. Under steady state conditions, the heat rejected by the hot junction is the sum of the heat absorbed by the cold junction and the heat equivalent of DC power applied.

In most applications, the cold junction environment will be at a lower temperature than that of the hot junction environment. Since the heat is absorbed from the cold junction environment and rejected to the hot junction environment, heat is pumped from a low temperature to a high temperature environment. Thus the system acts as a heat pump.

Figure 1(a) shows a circuit that has a single couple of dissimilar conductors connected to a DC power supply. Plate A is exposed to a cold environment and plate B, to a hot environment. These plates are made of high thermal

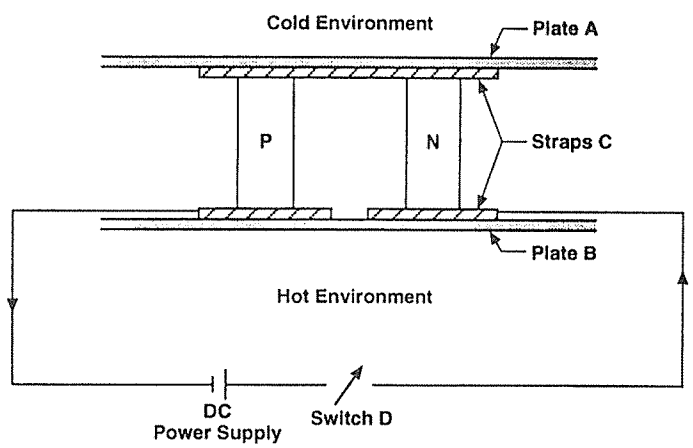

1(a) A Couple Illustrating Thermoelectric Heat Pump

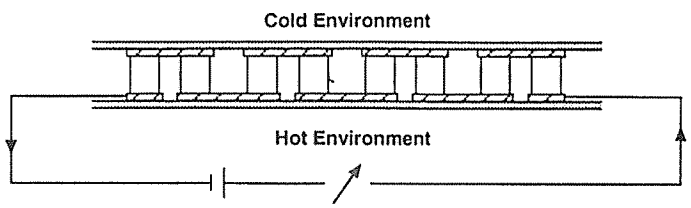

1(b) A Thermoelectric Module

conductivity and high electrical resistivity materials (typically ceramics). The elements shown as P and N are the dissimilar conductors that form the junctions. These conductors are made of low thermal conductivity and low electrical resistivity materials (bismuth telluride). Copper straps (marked C) are used to complete the electrical circuit. When the DC power is applied by closing switch D, plate A is cooled and plate B is heated. Heat is transferred from the cold environment to plate A, then from plate A through the straps to the P and N materials, then through the straps to plate B, and finally to the hot environment. It can be noted that the directions of heat and current flow are parallel in the P element and are countercurrent in the N element.

The amount of heat pumped by a single couple as shown in Figure 1(a) is usually very small. Greater capacity is obtained by arranging a number of couples into a single circuit, as shown schematically in figure 1(b). The number of couples in a commercially available subassembly, called a thermoelectric module, varies from 10 to 127. A typical 127-couple TE module is approximately 30 mm square and 4 mm high, weighs about 25 g, and can pump about 10 W of heat against a temperature difference of 40°C.

TECHNOLOGY APPLICATION

Thermoelectric cooling is currently applied in several instruments and sensors. These include electronic chips, infrared detection devices, dewpoint hygrometers, calorimeters, amplifiers, air pollution analyzers, several medical devices (blood analyzers, cancer detection units, etc.), and freeze point detectors. There are also consumer products, such as thermoelectrically cooled picnic baskets, on the market.

The application of TE cooling technology can also be applied to air conditioners and water chillers. The general arrangement of various components in an air conditioner (or a water chiller) is shown schematically in figure 2(a). The system has a central channel for the flow of air to be

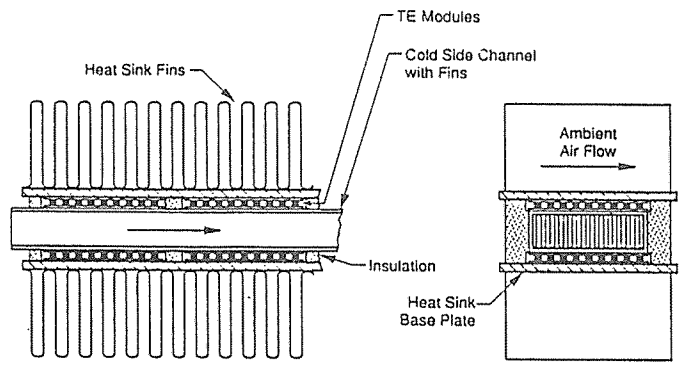

2(a) TE Cooler Arrangement

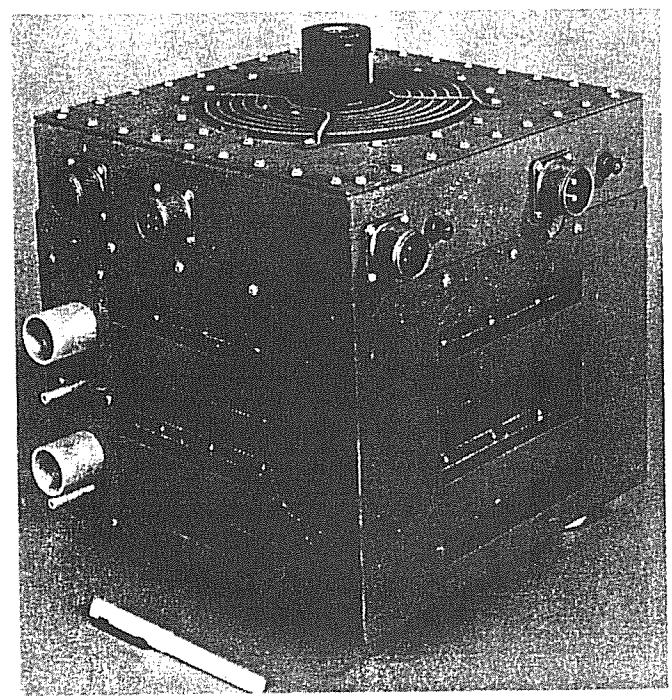

2(b) TE Air Conditioner

conditioned (or water to be chilled). The channel is rectangular in cross section. A number of TE modules are placed on each side of the channel, and they are in close thermal contact with the channel surface. The heat sink plates which have fins to dissipate the heat are soldered to the outer surfaces of these modules. The orientation of the heat sink fins are such that the direction of ambient air flow is at right angles to the direction of the fluid being cooled. The space between the channel and the heat sink plate that is not occupied by the TE modules is filled with insulation to minimize the cooling losses from the channel.

In order to provide the required cooling capacity, a TE cooling unit may require the use of a large number of TE modules. If all the modules are placed over the sides of a single channel, then the channel length is excessively large and unacceptable. Therefore, TE cooling units are designed with multiple channels. A photographic view of a typical air conditioning unit is shown in figure 2(b).

BENEFITS

The principal advantages of using TE technology for developing air conditioners and water chiller are as follows:

* The cooler core is a completely solid state device. The fluid pumping components (such as the fan and pump) are the only components with moving parts. As such, the TE cooling units are highly reliable. Maintenance is rarely required once the systems are put into service and operating.

* By properly choosing the pump and fan, the system can be designed to operate as an extremely quiet system. Also, the system can be stored on the shelf for several years and be ready to operate whenever it is needed.

* As a heat pump, the system can be reversed to provide useful heating. Thus, air and water heating are possible. Switching is also simple because it is done electrically.

* Low-capacity TE systems are very small in size and are light weight. For applications where bulk and weight are important considerations, TE systems should be considered.

The main drawback in applying this technology to today's air conditioners and water chillers is its low energy efficiency compared with vapor compression machines. The Coefficient of Performance (COP) of any cooling unit is a strong function of the temperature difference (ΔT) between the heat source and heat sink. The ratio of COP of a TE unit to that of a vapor compression unit operating under identical conditions is about 0.9 when the ΔT is very low. As the ΔT increases, this ratio decreases. At very high ΔTs, the ratio is only about 0.5 (sometimes even less).

TECHNICAL ISSUES

Based on the benefits alone of the technology, the attractiveness of the technology for numerous applications in the future is evident. However, the poor energy efficiency of the technology, (especially when ΔT is high) is a major obstacle for immediately adopting this technology.

Because energy efficiency could approach 90% of vapor compression efficiency at low ΔTs, the cooling industry should identify those units with a low ΔT that currently employ the vapor compression technology to determine whether any of the units can be switched to TE technology. Air conditioners and water chillers normally used in an already conditioned room would qualify for this evaluation.

One indicator that the TE community uses to measure the TE property of a couple is its "ZT" value. The semiconducting materials used in today's TE modules have a ZT value of about 1.0, which is not enough. A ZT value of 3 and above is required to produce energy-efficient cooling units. Numerous universities and other organizations are conducting materials research to reach this level of ZT. The cooling industry should closely monitor the progress of this research effort.

ECONOMICS

As is typically the case, the initial cost of producing a unit employing a new technology is high. This is also true with the TE technology. The cost of a typical TE module purchased in quantity is about $10 and it produces about 10

W of cooling. The capacity of a quarter ton air conditioner, for example, is about 850 W and it will require 85 TE modules. The associated module cost is $850. Including the cost of fabricating channels and heat sinks and assembling, the manufacturing cost of the air conditioner will be about $1,000. This cost is at least twice the cost of a vapor compression air conditioner.

All of today's TE modules are manually assembled. As the market share for TE cooling units expands, more automation will be implemented, and at that time, the TE module cost is expected to decrease, resulting in a lower cost for TE unit production.

If and when new TE materials become available, TE modules will be made of those materials instead of the currently used bismuth telluride. If the cost of making these new materials is lower than that of bismuth telluride, then a reduction in the cost of TE modules also can be realized. The first cost of TE units will then decrease and become competitive with the cost of vapor compression units.

TECHNOLOGY OUTLOOK

The development of TE technology has two components: system development and material development. The system development is nearly at a mature stage, primarily because this development is very similar to that of a cross-flow heat exchanger. The system can be easily designed and fabricated. The techniques for attaching the TE modules to the heat sinks have been well established. As such, the technology is ready for commercialization of those products where the ΔT is low or the energy efficiency is a secondary consideration.

The status of TE materials development is not encouraging. While several scientists have been attempting to invent new TE materials and/or trying to improve the existing materials during the last three decades, no major breakthrough has yet occurred. As such, the probability that a new, very attractive material will be available within the next five years is very low, but not inconceivable. Just as a breakthrough occurred in the superconducting materials area, should such a breakthrough occur in the TE materials area, then thermoelectrics will become a fully matured technology.

The market penetration of TE technology during the next five years will only be around 1% or less. Some of the currently used vapor cycle cooling units operating in an already conditioned space are likely to be replaced by thermoelectric units. Specifically in those applications where system reliability and/or long shelf life are primary considerations, TE technology will find a market niche. Good examples are medical and military devices.

With the explosive growth in computer chip technology, the chip manufactures are increasingly concerned about cooling chips to increase reliability and processing speed. Thermoelectric technology will acquire a significant share of this market during the next five years.

Metal Hydride Heat Pumps

prepared for the

Refrigeration and Air Conditioning Technology Workshop

June 23-25, 1993

by

David H. DaCosta
Ergenics, Inc.
247 Margaret King Avenue
Ringwood, NJ 07456
(201) 962-4480

Introduction

There are a number of metals that possess the remarkable ability to absorb large quantities of hydrogen gas. The hydrogen combines with the metal to form a "solid solution" which is, in effect, a new metal alloy. Hydrogen absorption occurs under specific temperature and pressure conditions. The hydrogen is released (desorbed) when the alloy temperature is elevated or the pressure is reduced. The absorption/desorption phenomenon is a reversible reaction and the metals that absorb hydrogen are called reversible metal hydride alloys.

When a reversible metal hydride alloy absorbs hydrogen gas, heat is given off; the reaction is exothermic. In order to desorb hydrogen from the metal alloy, heat is required. If the desorbing alloy takes its heat from ambient temperature air, the air temperature decreases, thus producing the refrigeration associated with air conditioning.

Ergenics, Inc. specializes in metal hydride alloy technology and its application for hydrogen storage, thermal compression, rechargeable batteries and heat pumps. Ergenics is in the process of quantifying performance characteristics of a metal hydride bench top prototype air conditioner with a cooling capability of 8000 BTU/HR. The energy source for the prototype is a hot air stream. Values for size, weight and performance that are presented in this paper are based on this bench top prototype.

Principles of Operation

The reversible metal hydride reaction can be expressed in the simplified chemical equation:

$$M + H \rightleftarrows MH$$

where: M is a metal or metal alloy

H is hydrogen

The top arrow in the equation signifies the absorption cycle:

$$M + H \rightarrow MH + \text{heat out}$$

The lower arrow shows the reversibility of the reaction and signifies the desorption cycle:

$$M + H \leftarrow MH + \text{heat in}$$

The reversibility of the metal hydrogen reaction and the heat associated with it provide the basis for hydride heat pumps. The heat pump is a closed unit in which hydrogen serves as an energy carrier between a pair of hydride beds. By selecting appropriate hydriding alloys, heat sources and heat sinks, heat can be pumped over wide temperature differentials. Elements of the process are illustrated in Figures 1 and 2.

Figure 1 illustrates a pair of hydride beds in the cooling mode. Hydrogen, which has been stored as a solid metal hydride in the lefthand bed, is desorbed. The heat necessary for desorption is taken from the bed's environment, causing cooling for air conditioning or refrigeration. The hydrogen flows into the righthand bed (mechanical pumping is not required). Heat from the righthand bed's hydrogen absorption reaction is rejected.

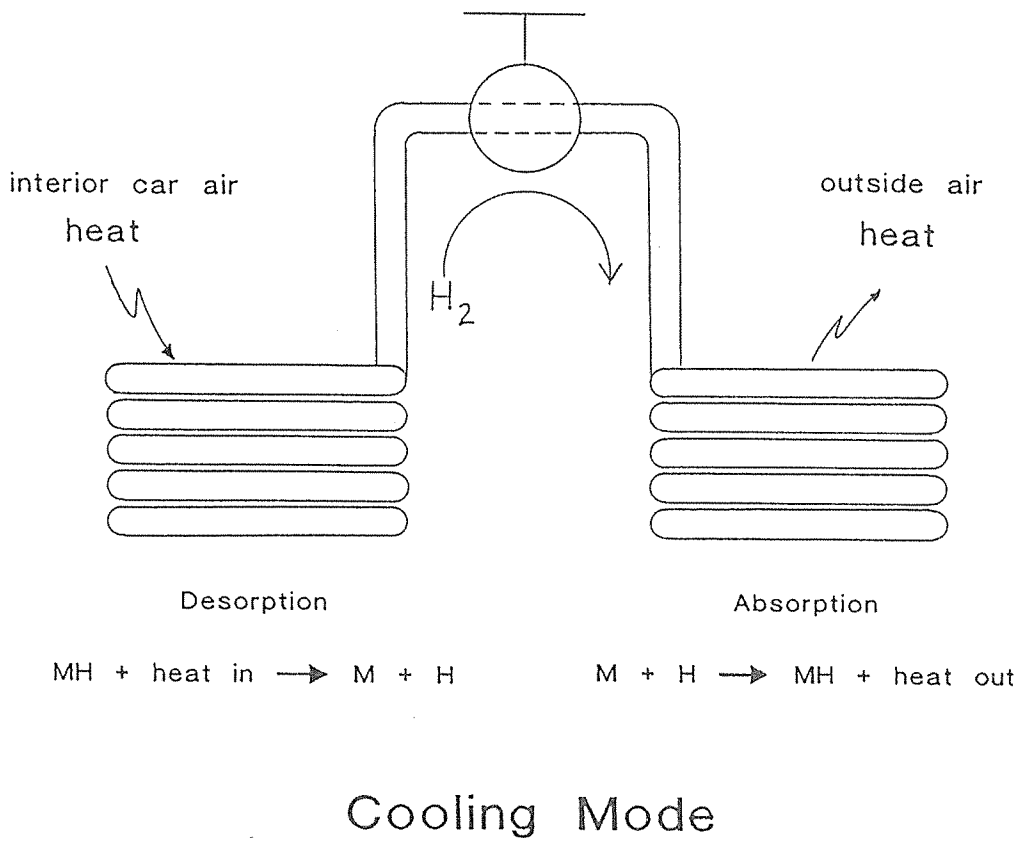

Figure 1 - Hydride Automobile Air Conditioner

When all of the hydrogen has been desorbed from the lefthand hydride bed (and subsequently absorbed by the righthand bed), it must be recharged into the lefthand bed to become available for additional cooling. Figure 2 illustrates the recharge mode. Here, the righthand bed is heated by an energy source, causing it to release its hydrogen which then returns to the lefthand bed. Heat from the lefthand bed's hydrogen absorption reaction is rejected.

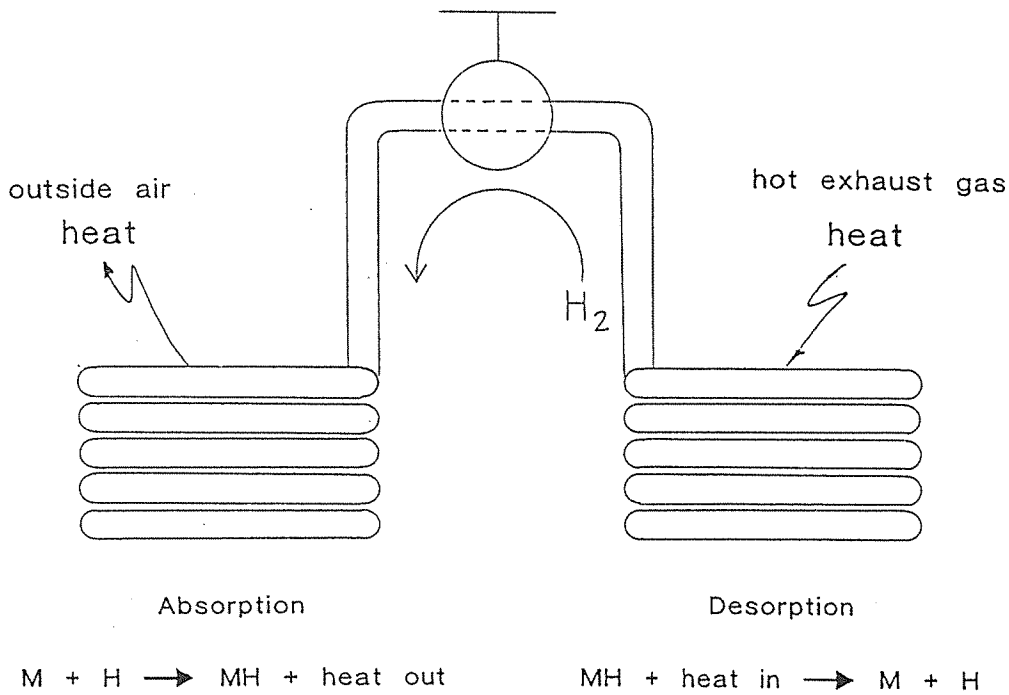

Recharge Mode

Figure 2 - Hydride Automobile Air Conditioner

The metal hydride air conditioner consists of a minimum of two two-bed systems. One pair of beds operate in the cooling mode while the other pair are in the recharge mode. In this way, continuous cooling is available for air conditioning or refrigeration.

Physical Configuration

The alloys used in heat pumps are in powdered form and hydride beds can be arranged in a number of physical configurations. Hydride beds fabricated by Ergenics contain the alloy powder within stainless steel tubes. An internal support structure accommodates powder expansion and contraction (up to 25%), and prevents powder migration. The current metal hydride heat pump state of development is defined by the 8000 BTU/HR bench top prototype which is briefly described below.

The prototype heat pump is essentially a shell and tube heat exchanger comprised of two paired hydride beds and inlet and outlet air flow gates that direct the hot air energy source, ambient air for heat rejection and cooled air flow during operation. The hydride beds are hermetically sealed via all-welded construction. The tube pattern is rectangular and a tube sheet partitions each paired bed into a hot energy source section and a cooling section. The heat pump is insulated internally.

The heat pump measures 25 inches wide by 15.5 inches high by 18 inches deep and weighs 75 pounds. It contains 27 pounds of hydride alloy. The hydride beds occupy only 55% of the shell volume leaving ample space for fans, controls, etc.

Performance

The cooling capability of the hydride heat pump operating at 100% efficiency without any sensible heat recovery is 8172 BTU/HR as summarized in Table 1.

TABLE 1

Metal Hydride Heat Pump Design Basis

	BTU/HR
Cooling capability of the alloy	10,280
Sensible heat loss	(1,710)
Loss through shell	(180)
Conduction loss through tube sheet	(138)
Net cooling capability	8172

Temperature drop across the heat pump air conditioner defines the "quality" of cooling. A temperature drop of 20°C (36°F) was selected as the design basis for the bench top unit. This temperature drop dictates hydride alloy selection.

The coefficient of performance (COP) for the bench top prototype is expected to be 2.65 with sensible heat recovery. A certain amount of COP performance improvement can be attained in future designs by using alloys with higher heats of formation, alloys with greater hydrogen storage capability and lower ancillary hardware mass.

Heat pump size and weight can be reduced with the use of extended surface tubing. The cycle time for each pair of beds in the prototype heat pump is 4 minutes; 2 minutes for cooling and 2 minutes for regeneration. The heat pump has thirty cooling "half" cycles per hour. Extended surface tubing will reduce cycle time while transferring the same amount of heat in each cycle. More than thirty cycles will occur each hour either increasing the heat transferred over time, or enabling smaller beds to achieve the same cooling performance.

Applications

Metal hydride heat pumps are particularly attractive for applications that have a source of waste heat because the heat pump cycle derives all of its air conditioning energy requirements from heat (electrical power is required only for fans and controls). Waste heat powered applications include air conditioning for automobiles and trucks as well as truck refrigeration.

As more performance, size and cost data is accumulated, metal hydride heat pumps may be found to be appropriate for residential air conditioning and refrigerators powered by natural gas.

Scale-up for industrial and commercial building cooling and refrigeration needs is feasible if a waste heat source exists, but may not be competitive with other cooling technologies.

Benefits

Metal hydride heat pumps for air conditioning and refrigeration are environmentally acceptable and provide the following benefits:

Non-polluting hydrogen is used as the energy carrier.

Metal hydride alloy raw materials (primarily rare earths, nickel and aluminum) are non-hazardous and plentiful.

The preferred energy source is waste heat (transportation) and natural gas (residential).

Coefficients of performance of less than 2.5 are achievable.

Compressors are not used. For transportation applications, eliminating the compressor increases engine fuel mileage and power.

The only moving parts are air stream dampers. The hydrogen process boundary is hermetically sealed.

Technical Issues

Relatively few technical issues remain to be resolved.

For transportation applications, the source of engine waste heat must be carefully evaluated. Hydride beds subjected to hot exhaust gas temperatures need to be examined for hydrogen diffusion effects. Techniques to minimize hydrogen diffusion through tube walls are being investigated.

Cool air temperature fluctuations, due to the reciprocating nature of the heat pump cycle, may not be acceptable to the consumer. Consideration must be given to adding a third pair of hydride beds to reduce the cool outlet temperature fluctuations.

Due to the flammable nature of hydrogen, detailed safety analyses will be required for each air conditioning application.

Economics

The metal hydride heat pump performance capabilities need better definition before meaningful estimates of initial system cost and total evaluated cost can be made. Rough estimates of raw material costs for a 12,000 BTU/HR metal hydride air conditioner are the following:

1.	Metal hydride alloy	$130.00
2.	Bed tubing	85.00
3.	Plastic ducting/dampers	12.00

Assembly labor in a high volume production operation is anticipated to range from $40 to $80. Costs for controls are not estimated.

Summary

Increases in hydride bed heat transfer kinetics have dramatically reduced the size and weight of metal hydride heat pumps. An 8000 BTU/HR bench top prototype air conditioner is expected to demonstrate a COP of 2.65. Future improvements include the use of extended surface tubing for additional size and weight reduction and higher heat of formation alloys for COP reduction.

Ergenics anticipates achieving projected cycle improvements in 1994. Product designs for specific applications and ramp up for commercial production can occur in the 1995 to 1997 time frame.

/jr/DHD12/MHHP622

SOLID SORPTION GAS HEAT PUMP TECHNOLOGY

Sam V. Shelton, Ph.D., Georgia Institute of Technology
David M. Sanborn, Ph.D., Wave Air Corporation
Daniel J. Miles, Ph.D., Wave Air Corporation
Atlanta, Georgia

TECHNOLOGY DESCRIPTION

The four major components in an electric heat pump are the compressor, condenser, evaporator and expansion device. The compressor's function is to pump refrigerant vapor from the low pressure evaporator to the high pressure condenser. This function can also be accomplished by alternately heating and cooling a solid adsorbent bed containing refrigerant and connected via check valves to the evaporator and condenser. This solid adsorbent heat-driven heat pump concept appears in U.S. patent literature as early as 1909, and refrigerators employing a solid adsorbent were commercially available in the 1920s.

In the basic solid sorption heat pump cycle, a condenser, expansion device, and evaporator are used to provide the same functions as in a vapor compression cycle. A two-bed solid sorbent system, in which the beds act as the compressor, is illustrated in Figure 1. Heat transfer fluid is pumped through a circuit consisting of the two beds, a fluid cooler, and a fluid heater. The fluid heater is natural gas fueled. The solid sorbent material is contained in the bed pressure vessels which are connected via check valves to the evaporator and condenser. The heat transfer fluid passes through tubes which are embedded in the solid adsorbent.

Initially, Bed 1 is heated while Bed 2 is cooled (i.e. heat transfer fluid flow is counterclockwise). As Bed 1 is heated, the adsorptive capacity of the solid sorbent decreases, and refrigerant is desorbed. The desorbed refrigerant vapor pressurizes the vessel. When the pressure in Bed 1 reaches the condenser pressure, the refrigerant check valve opens to allow the desorbed refrigerant to flow to the condenser and to continue flowing as the bed continues to be heated. The cooling of Bed 2 increases the adsorptive capacity of the solid, and the pressure in the vessel falls. Bed 2 depressurizes until the pressure is reduced to the evaporator pressure, at which time the check valve from the evaporator opens to allow refrigerant flow to the bed as it continues to be cooled.

When Bed 1 is fully heated and Bed 2 is fully cooled, the heat transfer fluid flow direction is reversed so that Bed 1 is cooled and Bed 2 is heated. This returns the beds to their original state. Alternate heating of the two beds results in a nearly continuous flow of refrigerant vapor to and from the condenser and evaporator respectively.

The fluid cooler provides a source of heat for space heating in addition to the heat from the condenser. Fluid enters the cooler at approximately 160°F and leaves at approximately 120°F. This high-temperature source of heat combines with heat from the condenser to deliver 120°-125°F heat to the house.

When one examines the basic cycle, it is noted that a substantial portion of the heat rejected from the bed being cooled is at a temperature equal to, or higher than, the temperature of the heat required to heat the other bed. Ideally this allows

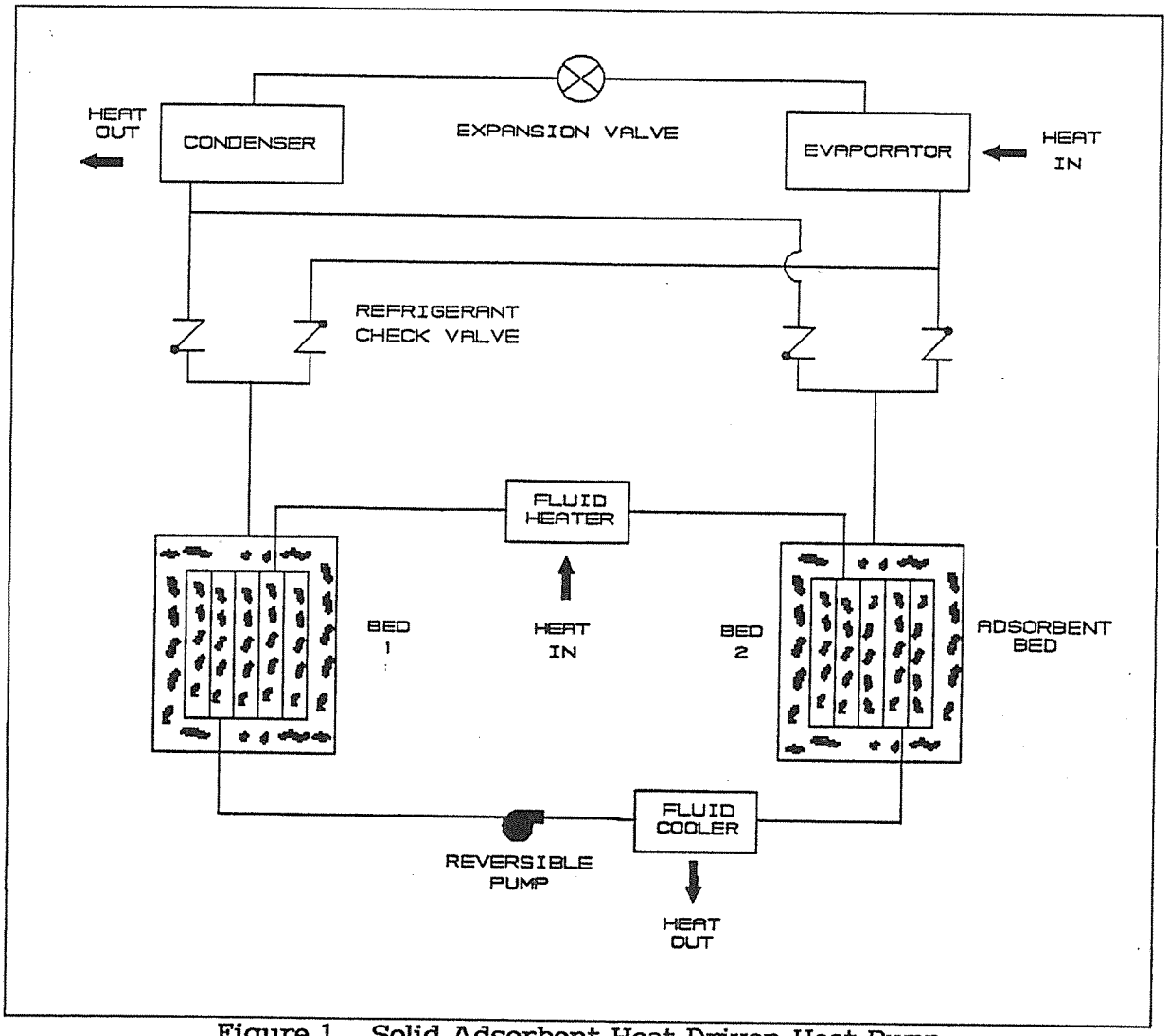

Figure 1. Solid Adsorbent Heat Driven Heat Pump

substantial regeneration of that rejected heat to reduce the gas energy required. In fact, calculations show that over 80% of the heat required is available from the bed being cooled without violating the second law of thermodynamics. Unfortunately, when traditional heat exchange practices are used, such as employed in shell-and-tube heat exchangers, the availability of high-temperature heat is out of phase with the need for high temperature heat. Figure 2 shows the temperature profiles at times t_1, t_2 and t_3 in the heating bed using conventional heat exchanger design practices. Notice that the temperature of the fluid leaving the bed (right side of the diagram at distance "L") rises continuously with time. The opposite is true for the fluid leaving the cooling bed as shown in Figure 3. Notice that regeneration is possible only up to time "a". After that time, the cooling bed is further cooled by rejecting heat to the environment, and the heating bed is further heated by heat from the gas heater.

The amount of regeneration can be substantially increased by changing the fluid outlet temperature-time relationship as shown in Figure 4. The desirable characteristics shown in Figure 4 can be obtained using the thermal wave concept. As shown in Figure 5, the fluid exit temperature (temperature at distance "L") remains at T_L until the heating bed is almost fully heated. The fluid exit temperature from the cooling bed will remain at T_H until it is almost fully cooled. In this manner, regeneration can occur until the temperatures cross at point "a" in Figure 4.

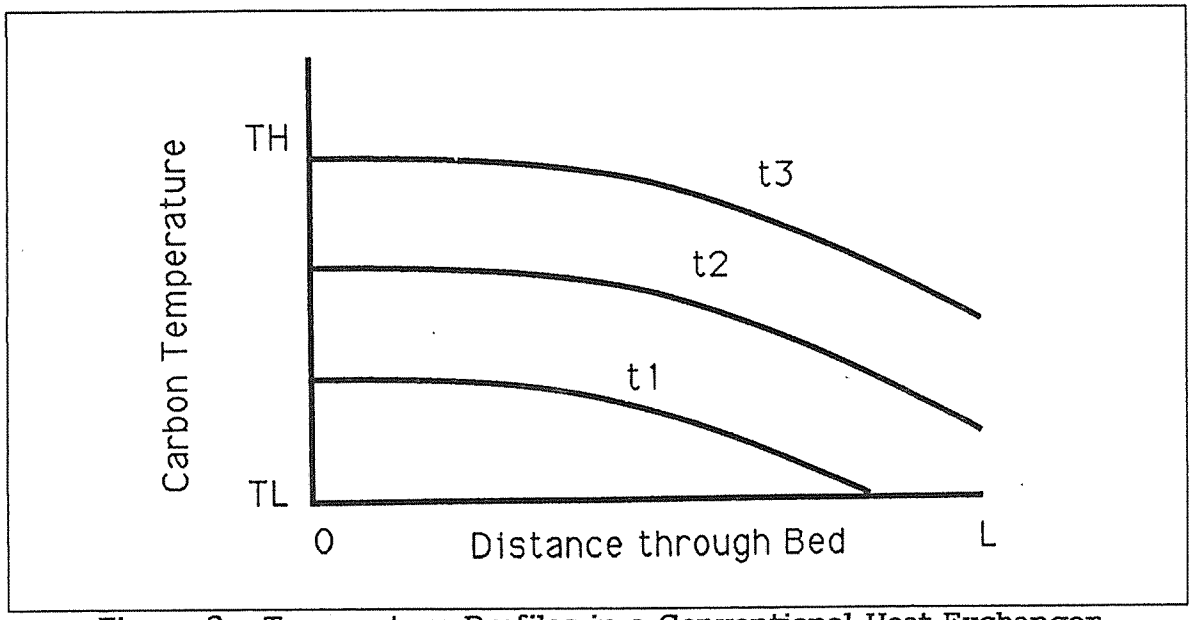

Figure 2. Temperature Profiles in a Conventional Heat Exchanger

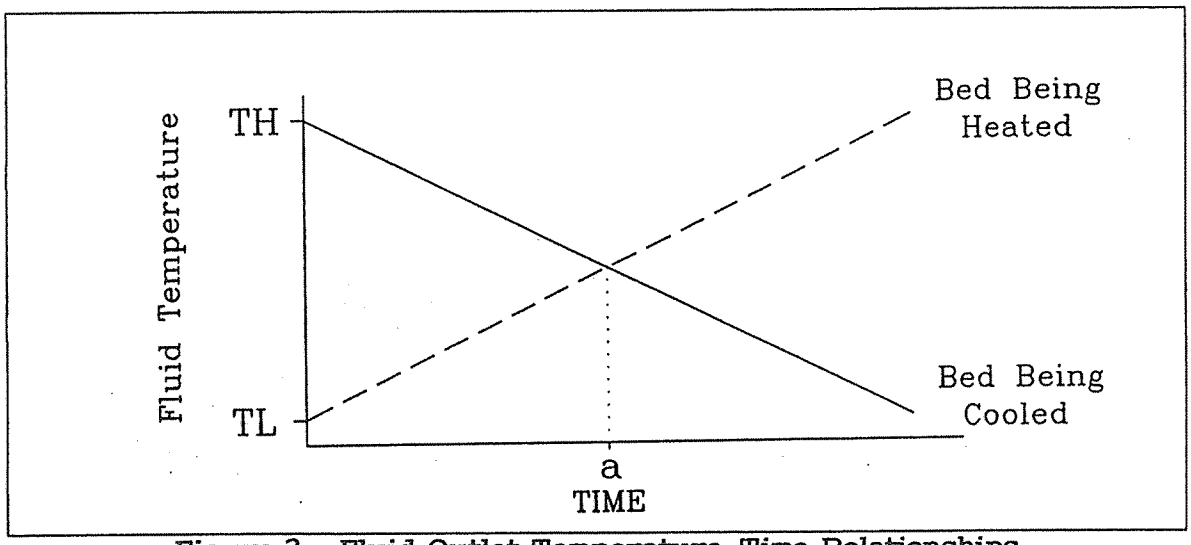

Figure 3. Fluid Outlet Temperature-Time Relationships Using Conventional Heat Exchangers

TECHNOLOGY APPLICATION

This technology is under development by Wave Air Corporation in Atlanta, Georgia with private, utility, and Gas Research Institute financial support. The application under development is a residential gas heat pump. This application requires both space cooling and heating. In DOE Region IV, which cuts across the middle of the U.S. at Washington, D.C., the ambient temperature at which the most heat must be delivered to the typical house on an annual basis is about 30°F. The ambient temperature at which the most cooling must be supplied on an annual basis is about 82°F. At typical energy rates, the cost for cooling using conventional electric air conditioning is about 3 times less than the annual cost of gas heating using a conventional furnace.

Therefore, for annual efficiency and economics the most important single operating point to consider is the heating operation at an ambient temperature of 30°F. This requires an evaporator temperature of about 20°F. In order to deliver the space heat without a "cold heat" effect the duct air temperatures must be above 110°F requiring the condenser temperature to be above 110°F.

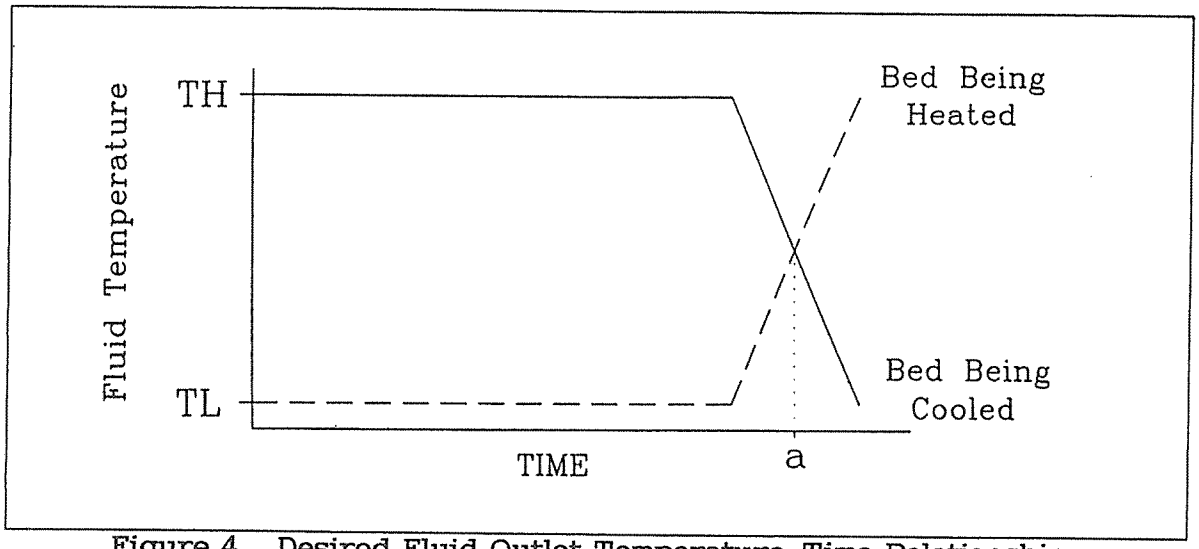

Figure 4. Desired Fluid Outlet Temperature-Time Relationships for Maximum Regeneration

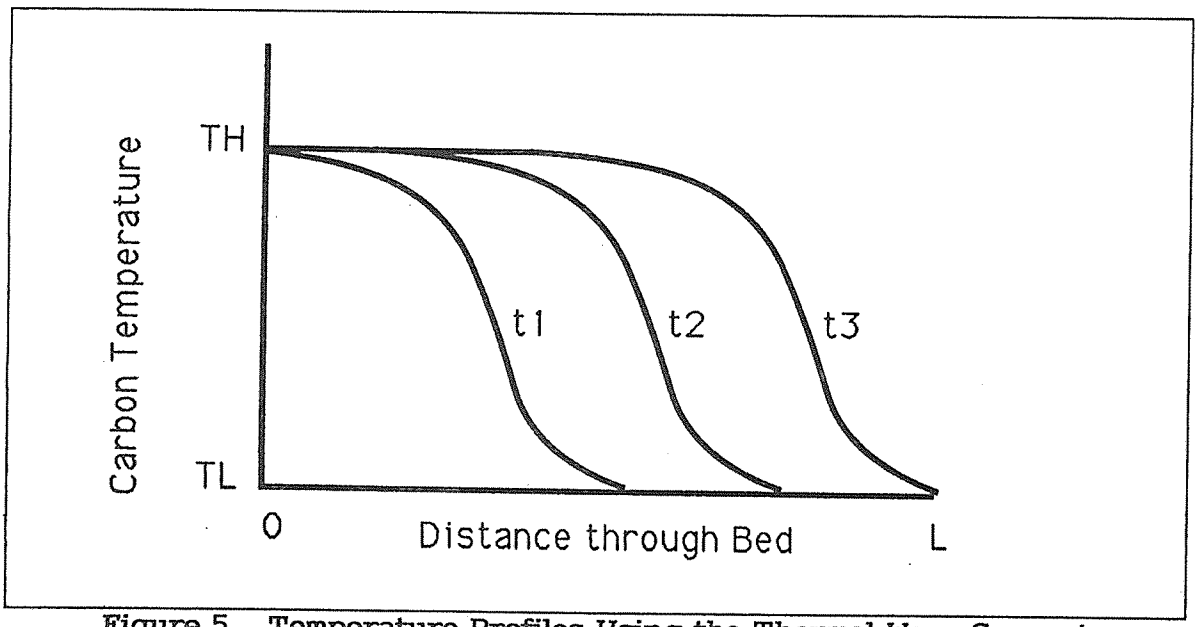

Figure 5. Temperature Profiles Using the Thermal Wave Concept

TECHNOLOGY BENEFITS

Solid sorption technology has several important fundamental technical features which make it an attractive candidate to achieve the advantages discussed above for generic sorption systems. These fundamental advantages are most noteworthy when directly compared against competing gas heat pump technologies. Briefly, these are; simplicity, low maintenance, high temperature heat input capability providing high efficiency potential, low pump power, inherent flexibility in operation, heating performance insensitivity to low winter ambient temperature, and environmentally benign refrigerants. The refrigerants which are most frequently discussed as being best suited for solid sorption are water and anhydrous ammonia. Both of these are environmentally benign, and ammonia is non-corrosive at the high temperatures with the least expensive metals.

Global warming is of course becoming a significant factor in international environmental protocol negotiations. Solid sorption also has significant advantages in this regard. Not only do the refrigerants have zero global warming potential, but the higher efficiency of converting fossil fuels to space heating and cooling produce less carbon dioxide, which is the major contributor to global warming.

Regarding the merits of the two common solid sorption refrigerants, water and ammonia, water is the ideal refrigerant except for its very low pressure (high vacuum) and low density at evaporator conditions, and its freezing point at 0°C. On the other hand, ammonia has been in use in refrigeration for over 100 years. It has a high heat of vaporization, high heat transfer characteristics, and positive evaporator pressures relative to the atmosphere. Mass diffusion kinetics in the solid sorbent is therefore not a problem. While flammable in a narrow range of high concentrations, it is difficult to ignite and will not support combustion after the ignition source is withdrawn. It has zero ozone depletion potential. In September, 1991, the American Society of Heating, Refrigeration, and Air Conditioning Engineers officially endorsed ammonia as an alternative refrigerant. The European community is also strongly supporting ammonia as an alternative refrigerant.

TECHNICAL ISSUES

The primary new technology in a residential gas heat pump product utilizing solid sorption is the sorbent beds containing the solid sorbent which must be heated and cooled by the use of a heat transfer fluid. First, a solid/refrigerant pair must be selected which is chemically stable and has a large change in adsorption with a over a reasonable temperature range. Activated carbon and ammonia is one pair that is an excellent candidate.

The solid sorbent bed and integral heat exchanger must have characteristics as follows: 1) the time period of the complete heating and cooling cycle must be less than about 5 to 10 minutes and, 2) this must be accomplished while maintaining an optimum thermal wave profile along the heat transfer fluid flow path.

The maximum cycle time period of 5 to 10 minutes is necessary to keep the mass of solid sorbent on the order of about 15 pounds per refrigeration ton of cooling capacity. If the mass of solid sorbent is greater than this, the mass of the sorbent and associated heat exchanger will be very large, resulting in cost greater than is economically practical to compete with current commercial technology.

Of course the thermal wave is necessary to reach a high regeneration of heat from the bed being cooled to help heat the bed being heated. It should be noted however, that while a very short thermal wave will produce the highest efficiency, it leads to large sorbent beds and associated heat exchangers. This is because at any given time, the only active part of the bed heat exchanger is that part on the progressing front. For a very steep wave, this means that only a very small fraction of the bed heat exchanger will be utilized at a any given time, dictating a very slow moving wave. This increases cycle times and leads to large beds and associated heat exchangers. Therefore, trading off the efficiency of the gas heat pump with the cost of the sorbent beds is necessary to determine an optimum thermal wave profile.

This thermal wave concept can be extended to refrigerant compressor systems using multiple beds, even or odd. This was demonstrated in systems that were built in the 1920s and reported in the literature by E.B. Miller ("The Development of Silica Gel Refrigeration," American Society of Refrigerating Engineers, Vol. 17, No. 4, 1929).

Over the past 5 years, these design trade offs between the number and configuration of the beds and the design of each bed have been studied both experimentally and theoretically in considerable detail to produce a bed and heat pump system design with the best potential for economic success against existing residential heating and cooling systems. These beds have been comprehensively tested over all operating conditions, and installed in a complete air cooled heat pump system. This system consists of an outdoor unit which produces chilled water for space cooling in the summer, or hot water for space heating in the winter. The hot or chilled water is circulated inside to an air coil which heats or cools the house air. Complete system optimization trading off system manufacturing costs against annual

operating cost is being carried out at this time. This primarily involves heat exchanger sizing, air flow rates, and water flow rates. At the same time, system and component simplification for ease of manufacturing is being studied.

ECONOMICS

To develop a successful gas heat pump for the residential application, the product must deliver comfort as good or better than the existing technology. The higher equipment costs, which will always accompany a gas heat pump, must be compensated for by lower annual operating costs. Acceptable simple paybacks for home owners is debatable, but 3 years is generally considered quite good with anything over 10 years unacceptable. Electric and gas utility demand-side-management subsidies to level their respective demands can reduce the equipment cost premiums.

To aid the purchaser in making this payback calculation, Federal Regulations require a yellow label with annual operating data clearly stated. The procedure for calculating this number is spelled out by DOE for electric heat pumps, electric furnaces, and electric air conditioners. The American National Standards Institute has just approved a standard for testing gas heat pumps which will yield annual operating data that the purchaser can use to compare the operating cost against other available heating and cooling products.

Detailed manufacturing costs studies have been carried out by an outside party on a base system design using the existing sorption bed design. The sorption beds have been developed to a point where their costs are less than 25 percent of the total system costs. Given this detailed costs analysis, system design optimization is being carried out to minimize this costs, while maintaining a significant cost savings.

The current status shows that a five year simple payback is achieved in a substantial number of cities of the U.S. These economics vary substantially from city to city as gas and electric rate structures varies. A significant variable is not only the annual electric to gas costs ratio, but also the winter to summer electric rate variation and the winter to summer gas rate variation. Many cities have considerable higher electric rates in the summer than winter, with lower gas rates in the summer compared to the winter.

CONCLUSION

Solid sorption has important fundamental features which make it advantageous for space conditioning. These fundamental merits coupled with new regeneration technology make it a strong candidate to capture the long sought after advantages of direct fossil fuel fired space conditioning in conjunction with benign refrigerants. New solid sorption technology shows advantages including; simplicity, low maintenance, high temperature heat input capability, low pump power, inherent flexibility in operation, heating performance insensitivity to low winter ambient temperature, and environmentally friendly refrigerants.

Minimum market volumes of 50,000 units per year must be achievable for a new gas heat pump product to make it attractive to an HVAC manufacturing and distribution company. Initial market introduction should be prudently small and built up over a few years. Market analyses by outside HVAC industry marketing specialists shows that significant market penetration is achievable with the current product technology concept to be commercialized in 1996. One benefit of this technology is that the theoretical potential is much higher than necessary for successful product introduction. Further development and system optimization is possible with second and third generation products based on this technology achieving increasing penetration of the 2 to 3 million residential heating/cooling systems sold annually.

Ejector Expansion Refrigeration Cycle

Brian Silvetti
Calmac Manufacturing Corporation
P.O. Box 710
Englewood, NJ 07631
(201) 569-0420

This material was submitted for inclusion with the information presented at the 1993 Non-Fluorocarbon Refrigeration and Air-Conditioning Technologies Workshop. Mr. Silvetti was unable to attend the workshop and hence could not respond to questions or comments relative to his work.

Section 4. Executive Summary

4a. Scientific and Technical Merit

A significant breakthrough is underway which promises to improve the efficiency, capacity, and maximum thermal differential for a wide range of vapor compression refrigeration systems. It is applicable to cooling, heating, and refrigeration systems in all sizes, including

- household refrigerators,
- residential, automotive, and commercial air conditioners,
- heat pumps, and
- commercial and industrial refrigeration.

A breadboard system has have already achieved a bench test efficiency (COP) improvement of 6% over standard vapor compression cycles. The fully developed system is expected to reach 10% improvement for air conditioning and up to 20% improvement for lower temperature applications.

The breakthrough is called the Ejector Expansion Refrigeration Cycle (EERC). One of the intrinsic losses in the standard vapor compression refrigeration cycle is the throttling of refrigerant in the expansion device. In the EERC, the energy normally wasted in thermal expansion valves, capillary tubes, and orifices is used positively by means of an ejector to raise the suction pressure entering the compressor. Since work done by the ejector replaces wasteful throttling, the evaporator cooling effect increases while compressor work decreases. The results are increases in both efficiency and capacity. These improvements are attained by the addition of low cost components having no moving parts. They are applicable to all vapor compression refrigerants, including new ozone-safe compounds.

Others have attempted to make this concept workable but have failed because of poor efficiency of the ejector primary nozzle. In their devices, the condenser liquid in the nozzle changes to vapor phase slowly relative to the nozzle transit time, so most of its expansion takes place after the nozzle exit. The result is an ejector pressure rise too small to be practically useful.

The applicant has repeatedly achieved a very significant pressure rise in laboratory tests. This success is based on a patentable innovation which causes the phase change in the primary nozzle to occur very quickly. The innovation is described more fully in Section 5.

The scientific merit of this proposal is demonstrated by the discovery of a means to realize the EERC concept where several other well known and highly respected parties have failed. The solution to the problem was based on an improved understanding of the basic physics of the processes involved.

The technical merit is shown by the proposal's total uniqueness relative to current industry practice, where the expansion energy is wasted in all cases. The state of the art is being extended, and wide scale application of the innovation is feasible. Multi-disciplinary planning has been used in guiding and evaluating the work done so far. This work has been limited, however, by the levels of financing viable for the applicant over the past two years. Rapid and effective commercialization requires more equipment, design and test facilities, and research personnel.

4b. Proposed Research and Development Program

The development of the EERC promises large benefits. Before this development can progress to the prototype stage, more information is needed on both the performance of two phase ejectors and the overall performance of the EERC. The EERC research program will thus be divided into two main components: two phase ejector development and integrated EERC development and prototyping.

The ejector development component will concentrate on a better understanding of the phenomena within the EERC's two phase ejector. Calmac's EERC research to date has greatly increased knowledge in this area, resulting in dramatic performance improvements. Further research into the basics of ejector performance promise additional improvements.

The EERC prototyping component will concentrate on analysis, design, and manufacturing methods for integrated EERC systems. Prototype EERC component packages will be installed in off-the-shelf heat pump and air conditioning systems. Testing will provide the database needed to select EERC components for a particular application, and the working test stand will be a powerful tool for marketing to large volume OEM customers.

4c. Broad-based Benefits

Concerns about energy conservation, global warming, and ozone depletion are having a major impact on U.S. and worldwide technology. There is clear consensus on the need to reduce fossil energy usage, with consequently lower CO_2 emissions, and to reduce the leakage of CFC refrigerants to cut ozone depletion. Vapor compression refrigeration accounts for about 23% of all U.S. electric energy usage (62 quads), so an increase in its efficiency by 10 to 20% could potentially save about 2 quads. This decrease in energy use would be a great benefit to the U.S., and the reduction in CO_2 emissions would go far towards meeting our national goals in that area. Worldwide, such an efficiency increase could save 10 to 20 quads of energy.

There is also growing concern about U.S. industrial competitiveness. Air conditioning and refrigeration equipment has always been a significant U.S. export, but our share of the world market in this area has shrunk. The development of an important, proprietary, U.S. owned innovation in air conditioning and refrigeration technology would result in a major increase in U.S. market share. With a $21 billion world market, this could have a meaningful positive impact on the U.S. balance of trade.

4d. Technology Transfer

The key innovation in our success with the EERC has been deemed patentable by our patent attorney, and an application has been filed with the U.S. Patent Office. Foreign patent applications will be filed within the year to secure international protection. Additional patentable innovations are expected. The precise dimensions, heat transfer, and flow pattern needed for maximum ejector performance will be a source of trade secrets which will also protect Calmac and our U.S. licensees.

Calmac does not plan to manufacture complete EERC refrigeration systems. We will, instead, manufacture a package of components required for the EERC and distribute them on both OEM and retrofit bases. We will make our expertise available to our customers, insuring that they make the best use of this new technology in their applications. For specialized market

Section 5. Research and Development Program

5a. Technology Development Goal

This project has two major technology development goals:

- to understand and improve the performance of two phase ejectors, and
- to integrate these ejectors into ejector expansion refrigeration cycles (EERC's) for air conditioning and heat pumping applications.

In order to make the motivations and goals for the project clear, this subsection will cover

- Basic concept of two phase ejector application,
- Performance improvements theoretically possible with the addition of a two phase ejector to a standard refrigeration cycle,
- The history of the EERC and of two phase ejectors,
- Calmac EERC research and improvements to the EERC,
- The need for development of two phase ejectors and of integrated systems, and
- An assessment of technical risks and potential payoffs from the research and development program.

5a1. The Use of an Ejector as a Refrigerant Expander

It has long been recognized that the COP of the vapor compression cycle would be improved by replacing the free expansion in the expansion valve with a work-producing expansion. This change would give two benefits: it would increase available cooling by removing energy from the refrigerant entering the evaporator and reduce required work by helping drive the compressor. The work-producing device could be a reciprocating, rotary, or turbine expander, but such a device would be expensive and prone to damage by low quality two phase flow.

The jet ejector is low in cost and able to handle a wide range of multiphase flows without damage. It is proposed that an ejector be used as a refrigerant expander.

A conventional vapor compression refrigeration cycle is shown in Figure 1(a). In this cycle, the high pressure liquid leaving the condenser is expanded to the low pressure of the evaporator through an expansion valve, capillary tube, or other expansion device. Within the expansion device, the internal energy associated with the high inlet pressure is converted to kinetic energy and then dissipated to heat through fluid friction. The energy is thus not only wasted as useful work, but is dumped into the evaporator as heat, increasing the load on the refrigeration system.

The ejector expansion refrigeration cycle (EERC) is shown in Figure 1(b). In this cycle, the high pressure liquid leaving the condenser is expanded in the motive nozzle of an ejector. The internal energy associated with the high inlet pressure is converted to kinetic energy, some

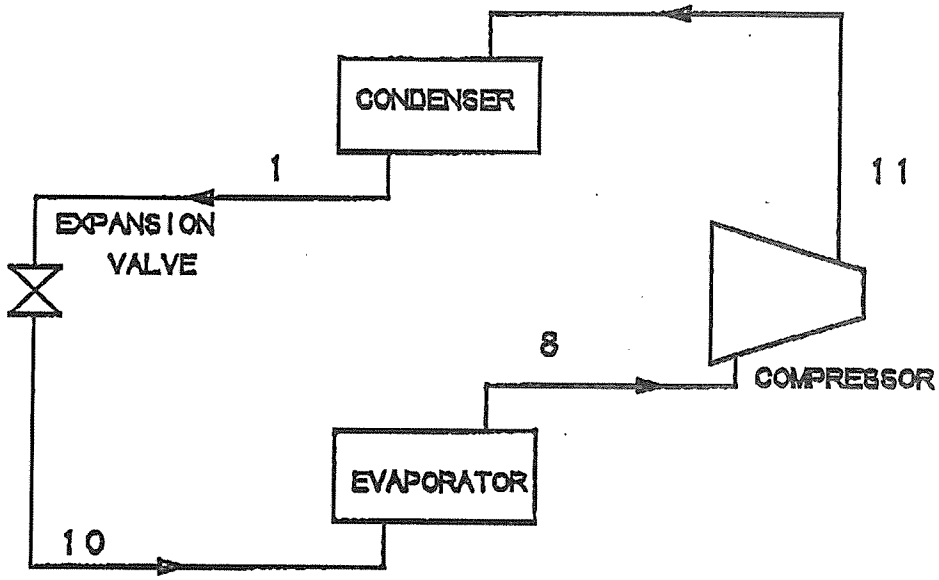

A) CONVENTIONAL VAPOR COMPRESSION

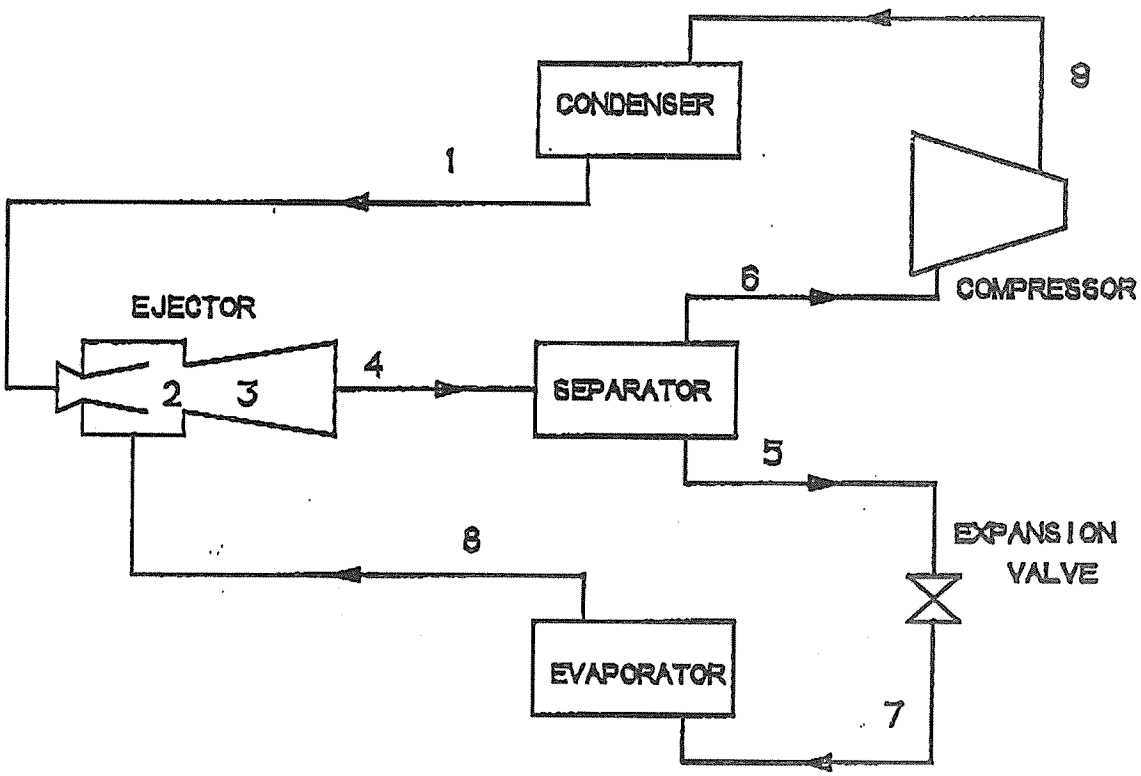

B) EJECTOR EXPANSION

Figure 1. Refrigeration System Schematic.
(Numerals refer to point shown on Figure 2.)

of which is transferred through mixing to the low pressure vapor leaving the evaporator. The kinetic energy is then used, in the diffuser, to compress the mixed stream to a pressure above evaporator pressure. The two phase stream enters a separator, from which vapor enters the compressor and liquid returns to the evaporator. The energy of expansion is thus kept out of the evaporator and used to assist the compressor. In essence, the EERC is a two stage refrigeration system, with the work otherwise lost in the high stage expansion process providing the work input for the low stage. The low stage throttling process is across a small pressure difference and thus causes little loss.

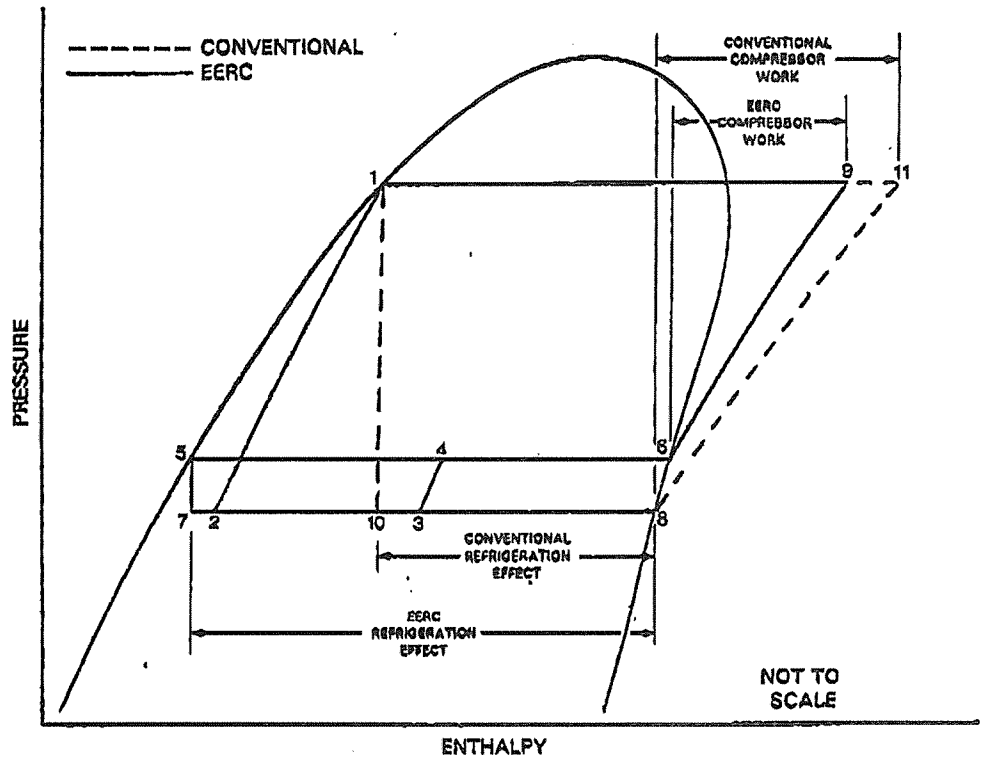

Figure 2. Comparison of Pressure-Enthalpy Diagrams for Standard Cycle and EERC (Numerals refer to points shown on Figure 1.)

Figure 2 compares the evaporation and compression process of the EERC with that of a standard cycle on a pressure-enthalpy diagram. It is apparent that the nearly isentropic expansion into the evaporator will result in lower evaporator inlet quality, and thus in higher evaporator enthalpy change. The higher compressor inlet pressure results in lower compressor enthalpy change. These two beneficial effects are, to some extent, counteracted by the fact that compressor flow in the EERC is slightly greater than evaporator flow. The net effect is, however, advantageous.

5a2. Performance Improvements with Two Phase Ejector

In order to compare the performance of the ejector expansion refrigeration cycle (EERC) with the standard vapor-compression cycle, simulations of the two cycles were carried out for the

same evaporator temperatures, condenser temperatures, compressor efficiencies, and heat loads. Those components which were common to the standard cycle and EERC were modeled as ideal elements. The ejector was modelled by estimating efficiencies of the motive and suction fluid nozzles and of the diffuser. Mixing loss was calculated from conservation of energy and momentum and the second law of thermodynamics.

Table 1
EERC Performance vs. Standard Cycle Performance.
5 F Evaporator Temperature, 86 F Condenser Temperature;
Compressor, Nozzle, Diffuser Efficiencies 1.

Refrigerant	Ejector Expansion			Conventional Vapor-Compression		Change with use of Ejector	
	COP	Compressor Displacement (CFM/Ton)	Fraction of Compression in Ejector	COP	Compressor Displacement (CFM/Ton)	COP	Displacement
R-11	5.70	29.9	4.3%	5.02	36.6	+14%	-18%
R-12	5.70	4.65	8.1%	4.69	5.87	+22%	-21%
R-13B1	5.62	1.966	13.0%	4.19	2.66	+34%	-26%
R-22	5.61	2.85	7.7%	4.67	3.53	+20%	-19%
R-113	5.73	75.3	4.6%	4.89	99.5	+17%	-24%
R-114	5.71	14.72	7.7%	4.57	20.1	+25%	-27%
R-123	5.73	37.0	4.6%	4.94	47.4	+16%	-22%
R-124	5.71	8.03	7.6%	4.68	10.46	+22%	-23%
R-134	5.71	5.84	7.3%	4.70	7.59	+21%	-23%
R-134A	5.70	4.61	7.9%	4.64	6.04	+23%	-24%
R-142B	5.72	8.97	5.7%	4.93	10.96	+16%	-18%
R-152A	5.68	5.03	6.5%	4.81	6.22	+18%	-19%
R-500	5.69	3.93	8.0%	4.68	4.96	+21%	-21%
R-502	5.67	2.66	11.1%	4.35	3.57	+30%	-26%
NH3	5.33	2.98	4.1%	4.76	3.44	+12%	-13%

Table 1 compares the performance of an ideal EERC (all efficiencies 1) with that of an ideal vapor compression cycle for standard evaporating and condensing temperatures. The Table shows significant increase in COP and decrease in compressor displacement for all refrigerants, but the changes are much larger for some refrigerants than for others. In the EERC the ejector provides a small but significant part of the overall compression ratio. In evaluating the results shown in the Table, one must keep in mind that performance

improvements increase with increasing temperature difference and decrease with decreasing ejector component efficiencies. Change in compressor efficiency has little effect on relative ejector/conventional performance.

It is instructive to study the effect of various refrigerants on cycle Coefficient of Performance with and without an ejector. For a conventional cycle, COP varies from 4.19 to 5.02, a spread of ±9.0% about a middle value. For an EERC, COP varies from 5.33 to 5.73, a spread of ±3.6%. If we eliminate ammonia from consideration and include only current CFC's and proposed replacement compounds, EERC COP varies from 5.61 to 5.71, a spread of only ±0.8%. It is apparent that a large part of the difference in COP of various refrigerants is due to the loss in the expansion valve. In comparing various CFC's and alternatives, the expansion valve loss comprises almost the entire difference. Thus, the loss in COP from switching to environmentally acceptable refrigerants is minimized by the EERC.

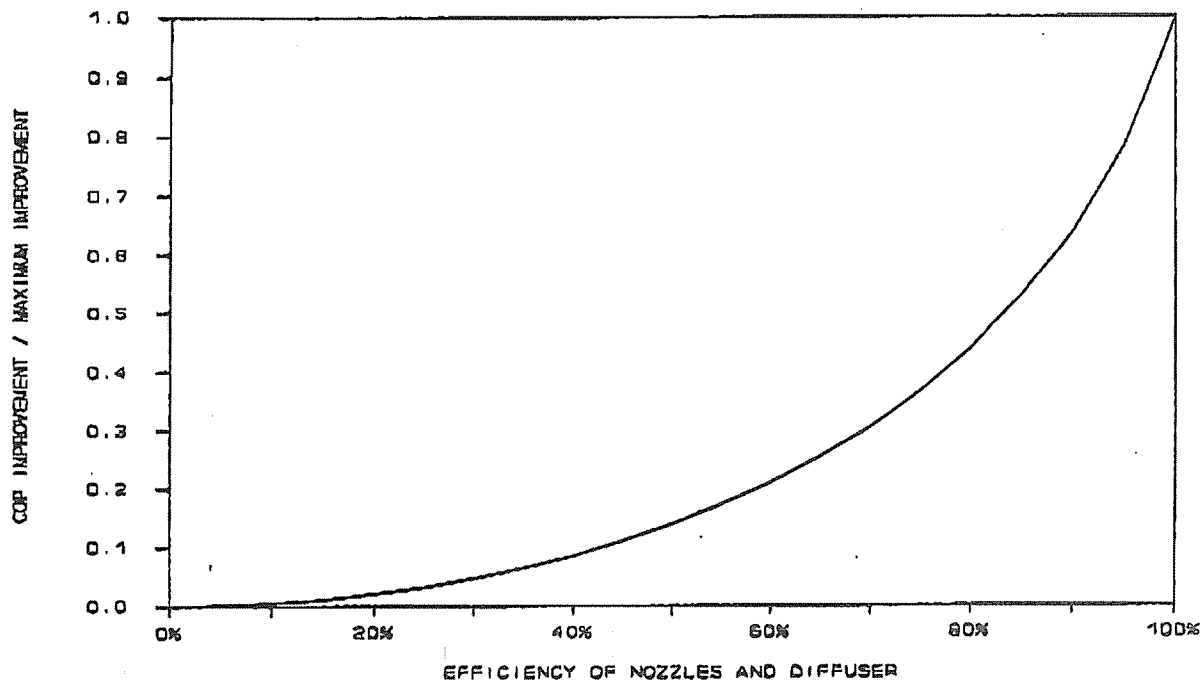

Figure 3. COP Improvement Relative to Ideal Ejector Expansion Cycle.
R-12, 5 F Evaporator, 86 F Condenser, Compressor Efficiency 100%
Other Efficiencies Equal as Given.

The effects of ejector component inefficiency are shown in Figure 3. The figure shows the fraction of the COP improvement given in Table 1 that can be expected for the same operating temperatures with individual component efficiencies (motive nozzle, suction nozzle, diffuser) equal and less than 100%. The plot was made for R-12, but the plots for other refrigerants are almost identical. It should be noted that overall ejector efficiency is much lower than the individual component efficiencies. Nevertheless, the data shows that performance improvement is considerable even for component efficiencies in the 70-80% range.

The effects of varying evaporator and condenser temperature are shown in Figure 4. The figure shows the COP improvement with ideal components and R-12 over a range of operating

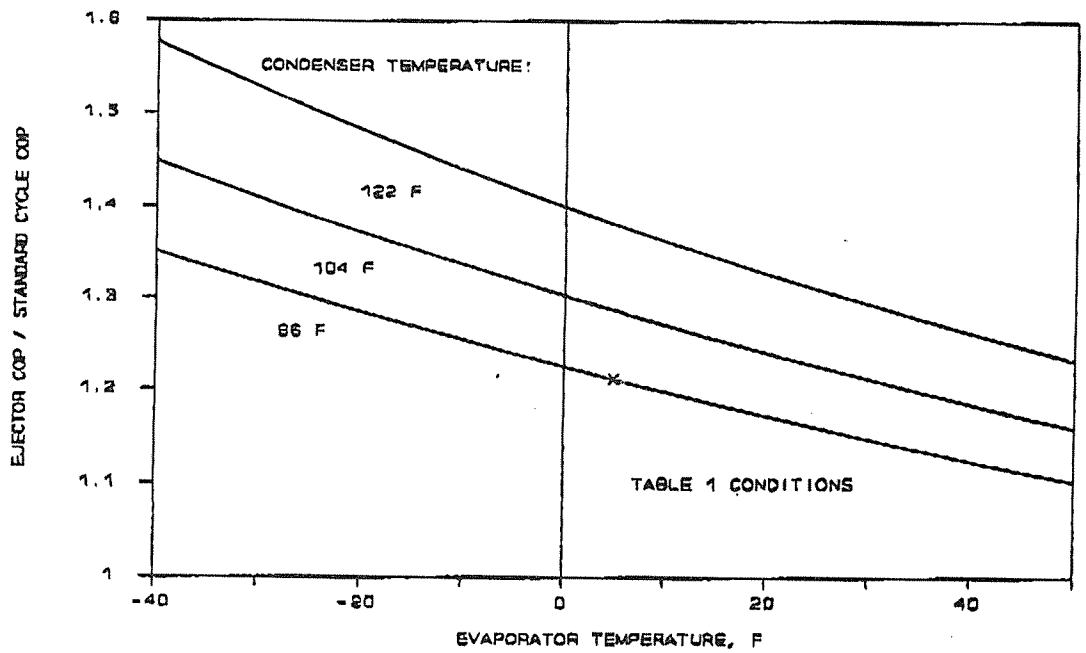

Figure 4. COP Improvement vs. Evaporator Temperature.
R-12, Various Condensing Temperatures, all Efficiencies 100%.

conditions. Performance improvement with the EERC is shown to increase with increasing temperature lift. The point reported in Table 1 is marked on the graph, and it is evident that many realistic operating conditions result in greater performance improvement. System performance shows similar dependence on temperature for other refrigerants.

Refrigerant R-22 is now being considered as a medium-term substitute for R-12 and R-502 in many systems. One of the difficulties with this substitution is the high discharge superheat associated with R-22[1]. Figure 5 shows that the EERC gives greatly reduced compressor discharge temperatures, even with conservative ejector component efficiencies. It should be noted that the figure was plotted for a fully hermetic compressor. For a semi-hermetic machine, where there is some cooling of the heads, the EERC will meet the practical limit of 300 F for all conditions shown.

It is evident that the EERC offers considerable improvement over a conventional vapor compression cycle in energy efficiency, compressor displacement, and compressor discharge superheat. All of the elements of the system except the two phase ejector are used in existing systems. The ejector, however, requires further development.

1. Muir, E.B., "Commercial Refrigeration and CFC's," *CFCs: Today's Options - Tomorrow's Solutions*, ASHRAE, 1989, pp 81-86.

APPENDIX D

QUESTIONS AND ANSWERS

Questions and comments for Manfred Döhlinger concerning refrigerators using hydrocarbons:

Please comment on the near term introduction of 16 to 18 cubic foot (450 to 510 l) refrigerator/freezer models in Europe around October; is not a refrigerator/freezer already on sale in Europe including U.K.?

There is no market in Europe for domestic fridges of sizes in the range above 16 ft^3. The largest produced in series is 12.9 ft^3 without freezer from Bosch/Siemens. It has only an R-600a charge of 20 g. This is less than the charge in 5 ft^3 models. With only 0.1 kWh/24 hr/100 liters it has the lowest relative power consumption on the market. By this it can be assumed that hydrocarbon charges for larger fridges of 16 to 18 ft^3 can easily be kept lower than 50 g if optimized properly.

There is a 5 ft^3 refrigerator/freezer from Bosch/Siemens on the market since April 1993. The same size fridge will be on sale by Liebherr at the end of this month [July 1993]. Foron will offer their whole line at October '93, including fridges with 3-star freezers.

What is the status of hydrocarbons as refrigerants for use in heat pumps and air conditioners?

There are no changes in using R-22 in new air conditioners and heat pumps in Europe announced yet. R-290 is sometimes used as a drop in, but more or less secretly.

Recent published data by German refrigerator manufacturers show that refrigerant R-134a provides better energy efficiency than when using hydrocarbon refrigerants. This raises the question of using the same basis of comparison and if systems were optimized.

This is only true with the Bosch/Siemens fridge/freezer. All the others on the market have (by their catalog data) equal or better energy efficiencies with hydrocarbons than with R-134a. All will have better efficiencies with R-290/R-600 blends after more time for optimizing.

Questions and comments for David Berchowitz concerning the free-piston oil-free compressor developed by Sunpower:

Do manufacturers see a problem in the life of compressor valves that are running dry (oil-free)?

It is possible to design compressor valves to run dry for indefinite periods. The units that are currently on test at Sunpower are using valves that normally operate under oil-lubricated conditions. So far we have not noticed any indications of wear or other deleterious effects other than slightly poorer sealing characteristics.

What is the system weight of a 250 W compressor unit?

5 kg.

Have you built and tested high capacity units, such as 3 tons? If so, compare its performance.

No, but we are planning to move in that direction as soon as possible.

One of the secondary benefits of the lubricant in a domestic refrigerator is the suppression of noise. How does the noise level of the linear compressor compare to that of a conventional crank and piston compressor?

From subjective evaluations the compressor seems to be very quiet. Oil does reduce noise in crank driven machines because it damps out the tendency for backlash in the clearances of the mechanical linkage. Since the free-piston compressor does not have a mechanical linkage, there is no mechanism slap or backlash to cause the noise in the first place. Piston slap does not occur due to the presence of the gas bearings. The valves do not seem to contribute significantly to the noise either lubricated or dry.

What is the electromechanical efficiency?

$$\eta = \frac{P\frac{dV}{dt}}{\text{Power elect.}}$$

The gas bearings have insignificantly small friction thus the electromechanical efficiency is essentially the efficiency of the linear motor. The linear motor efficiency is between 92 and 93%.

What are the limitations which would occur if the frequency is increased by a factor of two or four?

Valve response is likely to be a problem, however, with redesign this may be overcome. Flow losses may not be that easy to keep low.

Have you considered flexure bearings?

No.

How do machining tolerances and surface finishes impact production costs?

This machine has only one close fitting pair and therefore manufacturing costs associated with close tolerances and finishes are considered to be less than conventional crank machines.

How will you deal with the problem of system contaminants in the gas bearing and the tiny drillings that supply the gas to the piston-cylinder gap?

No capillaries are employed and no problems have been encountered with system contaminants with the exception of oil. We have thus far not used filters but we make sure that the system is oil free.

Please comment on the automotive A/C application of free-Rankine and Stirling; what is the potential?

The free-piston compressor would be a better choice wherever electrical energy is used to drive the A/C system. I doubt that it could compete with an engine driven system but we have not looked at this carefully. The free-piston Stirling is competitive with vapor compression at temperature lifts of greater than 70°C. This is probably unlikely in most automotive applications.

Up to what thermal capacity do you think the linear piston compressor is competitive with current vapor compression machinery, say at -30°C cold temperature?

The linear compressor is competitive with all current vapor compression systems employing a piston crank drive. It essentially removes the losses attributable to the crank mechanism and provides modulation by adjusting the amplitude while holding a constant dead volume. Furthermore, the linear compressor does not require oil.

Questions and comments for David Berchowitz about Stirling cycle refrigeration:

The isentropic efficiency of commercial refrigeration compressors is substantially higher than that for domestic refrigeration compressors. Can the Stirling cycle gain the same benefits when it is scaled up to larger sizes?

The free-piston Stirling does have a disadvantage when scaled up to larger sizes owing to the scale-effect of the internal heat exchangers. There would be a point where one would require multiple cylinders to preserve performance. The free-piston Stirling is probably limited to about 60% of Carnot at typical food freezer temperatures. I would expect that a well designed commercial refrigeration compressor performs at a similar level. Furthermore, small vapor compression systems generally have friction losses which are a larger fraction of the input power. As the capacity increases, the friction generally becomes a smaller fraction of the input. The free-piston configurations do not have friction losses and so have an advantage wherever friction is significant. In commercial applications, the real advantage of the Stirling may be in the Duplex form in which natural gas may be used as the energy source rather than electricity.

What are the investments required for OEMs in retooling for the required changes in the refrigerator and costs of other required components (i.e. heat pipes, etc.)?

The cost of the heat pipes is not seen by GE to pose a significant additional cost to the system. Their argument being that if efficiency is maximized, as it might be in future refrigerators, then vapor compression systems will in all likelihood have far more extensive heat exchangers than are currently used. When maximized efficiency systems are compared then it was found that the costs of improved vapor compression heat exchangers are similar to the costs of the Stirling heat pipe. Investment and tooling costs were estimated by GE to be $18.7 million and $1.544 million respectively for a 250,000 units/year volume. This does not include facility costs.

What are the efficiency trade-offs between continuous/modulated operation of a domestic cooler and on/off operation?

The efficiency trade-offs using continuous modulation have never been determined at Sunpower. According to Warren Bessler at GE, the energy savings of continuous modulation may be as much as 15%. About 10% comes from cycle losses and the rest comes from the increased component efficiencies when running at lower capacity (e.g., heat exchangers become more effective). The comparison between the vapor compression and Stirling systems was based on both being capable of continuous modulation. In the study, GE assumed that the vapor compression system modulates with motor speed and the Stirling uses amplitude. A free-piston compressor would obviously use amplitude too but GE chose to compare the Stirling to an advanced GE crank-driven design which uses speed modulation. Costs of the modulation are associated with the increased electronics required. However, the mechanical components are expected to be cheaper so the overall effect of including the electronics is not seen to add significantly to the cost.

Questions and comments for Pete Riggle about Stirling cycle refrigeration:

Please expand on the reluctance of end-users to fund systems integration, engineering, etc.; and your expanded role of government to address producability issues.

What are the efficiency trade offs between continuous/modulated operation of a domestic cooler and on/off operation?

Existing refrigerator compressors have a COP over 2.0 at typical conditions, whereas your target efficiency is only 1.5. How are you going to improve on vapor compression efficiency?

Please comment on long life testing.

Stirling engines and coolers developed by STC employ two alternative approaches to achieve long maintenance-free life. In our kinematic Stirling machines and hydraulic output free piston Stirling engines, welded metal bellows are employed to separate the Stirling cycle working gas from portions of the machine containing oil for lubrication or power transfer. In our free piston machines employing linear motors or alternators we employ flexural bearings to allow pistons, displacers, and the armatures of linear electric motors or alternators to oscillate with rubbing.

The flexural bearings employed in some STC machines, and the bellows employed in others, employ steel alloys which exhibit endurance limit behavior. For flexing elements made of these materials, the expected failure rate for infinite cycles of flexure is predictable, and falls dramatically with the peak design stress selected. The peak design stress employed by STC implies very low engine and cooler failure rates from bellows or flexural bearings. Typical predicted engine or cooler failure rates from bellows or flexural bearing failure are well under 0.1% of the machines over a 10 year life.

An endurance test of a Stirling engine employing a flexural bearing and seal bellows was initiated around 1970 and operated for 6.9 years of continuous running without failure of the bellows or the flexural bearing. Component tests of 30 welded metal bellows units have been in continuous operation for 11 to 15 years at a frequency of 30 Hz with zero flexural failures. Three of these bellows have developed pinhole leaks from high sulphur lubricant which was spattered on the bellows by the test drive mechanism. Flexural bearings have demonstrated lifetimes exceeding 30,000 hours without failure. STC has an ongoing flexural bearing life test in which we have intentionally failed flexures in accelerated testing and at lower stress levels have accumulated thousands of hours of failure-free life. STC has never failed a flexural bearing outside a test in which failures were expected.

In 1992, STC completed development of a 250 watt 77 K kinematic drive cryocooler with bellows seals. Dozens of sets of bellows underwent 18 months of accelerated life testing which supported STC's basic life and reliability prediction methods. Operation of the seals within prototype coolers verifies the expected long life of the bellows.

Questions and comments for Ed Miniatt about Stirling cycle refrigeration:

Are you concerned about oil vapors condensing on the cold surfaces?

No. In the past, oil penetration into the cycles was a concern, but no longer is. Several reliable oil seal devices have been developed and proven in keeping oil out of the cycles.

Please comment about life testing.

Successful endurance testing of the STM4-120 engine at full power is ongoing now. Although the first refrigeration prototype will not be completed until the end of this year, it will use the exact same drive.

Is auto A/C being worked on? Function of Detroit diesel application; auxiliary power?

Yes. STM has signed a Corporate Agreement with Detroit Diesel Corporation to develop the STM4-120 for various auxiliary power applications. These include, but are not limited to:

- Hybrid Electric Vehicles (buses and vans)
- Marine Generator Sets
- Military APU's
- Solar

How does the mass of your engines and coolers compare with that of conventional engines and compressors?

The short block for the STM4-120 weighs 120 kg. With the external heating system for engine applications the weight comes to about 110 kg. Producing 52 kW @ 4500 RPM, this gives a weight/power ratio of about 2.1 kg/kW (3.5 lb/hp). With the refrigerator cooling heads the weight comes to 109 kg, not including the electric motor needed to drive the machine. For a cooling capacity of 25 kW @ 1800 RPM, the weight/cooling capacity ratio comes to 4.36 kg/kW (0.0028 lb/Btu). These weights are very competitive with engines and cooling machines of the same power ratings.

Questions and comments for Tim Lucas about acoustic compressors:

How do you modulate the compressor?

Variable capacity is accomplished simpy by changing the drive voltage to the linear motor.

When power is first applied to the compressor, the peak-to-peak pressure amplitude of the acoustic wave will increase until it reaches the steady state pressures required for condensation and evaporation. Once these pressures are reached the wave becomes clipped. The clipped portion of the wave, above condensing pressure and below evaporating pressure, is associated with the PV work being provided. Once this equilibrium condition has been reached, further increases in applied drive power will increase the PV work at the current heat exchanger pressures, thus varying the compressor's capacity.

Which working refrigerants are the appliance manufacturers interested in for the compressor? Can you use noble gases or ammonia?

U.S. appliance manufacturers are primarily interested in HFC-143a for the short term, since it is commercially available. They have also expressed interest in hydrocarbons for the European market.

Any gas can be used in the compressor with the following considerations. The resonator is the primary size determining component of the compressor, and its length is equal to a minimum of one half of the wavelength of sound. The speed of sound is different for different gases. This means that for a constant operating frequency the resonator's length will be different for different gases.

Running frequency will ultimately be limited by how fast valves can run. If gases with very high sound speeds are used, then the length of the compressor must increase to prevent excessive valve speeds. Current prototypes run at 300 Hz, but valves have been operated at 600 Hz. There appears to be plenty of valve speed head room to allow the use of higher sound speed refrigerants, like hydrocarbons, and still keep resonator size constant.

What are the projected efficiencies of your compressor? Are there any test data?

See *Efficiency* section of the written paper.

Questions and comments for Steve Garrett about thermoacoustic cooling systems:

What is the work that Ford is going to report on in October? Is it auto A/C? Will it be efficient with current engine designs? Does it still use noble gases?

The work that Ford has been doing in thermoacoustic cooling will be reported at the October meeting of the Acoustical Society of America which will be held in Denver, Colorado. They will be describing a modular refrigerator built to explore scaling to larger heat flux. Their test system employs a commercial 10 inch woofer as the sound source and uses pure helium gas. Their initial application is novel and proprietary. If these efforts are successful, extension to appliance and automotive air conditioning applications could follow.

What is the best projected efficiency of your system?

At the present time, our best projected efficiency in a domestic refrigerator/freezer system has been 42% of Carnot. This is inclusive of resonator and primary heat exchanger losses but exclusive of electroacoustic conversion efficiency of the loud speakers and of electrical power consumption of the pumps which circulate the heat exchanger fluids for transport of useful cooling and exhaust of waste heat. This design is still of the "conventional" type. Better efficiencies may result from some of the variations which are mentioned in the response to the next question.

How is energy efficiency to be increased to 40% of Carnot? Does the efficiency include the heat transfer equipment required to make an operable system? Current home refrigerators operate at 40% of Carnot, with expectations of 50-60% of Carnot. Can the thermoacoustic compete with this type of efficiency?

The energy efficiency has been raised to 40% of Carnot by improvements in resonator geometry to reduce turbulent losses and by the recent availability of computer models which allow for the simultaneous optimization of the stack and primary heat exchanger spacing, length, and location. Since the field is still rather immature, it is difficult to predict exactly how further efficiency increases could be realized. Just recently, the use of stacks which have a convex curvature (e.g., pin stacks), as opposed to the conventional concave curvature (ducts, capillary arrays, parallel plates, etc.), has produced theoretical efficiency increases of as much as 15% over the existing stack geometries in some applications [G. W. Swift and R. M. Keoleian, accepted for publication in the Journal of the Acoustical Society of America]. The use of multi-element stacks or stacks with continuously variable spacing also are predicted to provide improved performance [G. Bennett, Ph.D. thesis, Department of Mechanical Engineering, University of New Mexico, 1991].

In acoustic terms, thermoacoustic cooling and the Stirling cycle are the standing wave and travelling wave limits in a continuum of possible refrigerator designs. It is likely that the performance of thermoacoustic (standing wave) refrigerators would also be improved by the proper reduction in the standing wave ratio so that a Stirling (travelling wave) component could be used to enhance the overall heat pumping efficiency and power density [T. J. Hofler, "Concepts for Thermoacoustic

Refrigeration and a Practical Device," Proceedings of the 5th International Cryocooler Conference 18-19 Aug 1988, Monterey, CA].

Ultimately, as one might expect in a new technology, there are presently many more interesting options to explore than there are qualified scientists and engineers to test them. Recent support from the Office of Naval Research should increase the number of universities and graduate students working on thermoacoustic systems and their components so it may be possible that thermoacoustics will be able to compete with the projected efficiencies of chemically based cooling cycles in a few years in the laboratory, and within this decade in some component of the marketplace.

Questions and comments for Tony DeGregoria about magnetic refrigeration:

How can the high investment/cost be reduced?

There appear to be two questions here:

- How can the high initial investment cost be reduced?

The manufacture of magnetic heat pumps does not require the use of unique materials, tooling, or manufacturing processes. While regenerative beds constructed of magnetocaloric materials are unique as assemblies, the tooling and manufacturing processes required for their construction are commonly available in the mechanical and fluid components manufacturing industry.

Superconducting magnetic design methods, materials, and construction processes required for the manufacture of superconducting magnet assemblies is publicly known and readily available. Superconducting magnetic assemblies are available as products from numerous manufacturers.

The investments required for other major system components, such as high performance heat exchangers, and fluid system components would not be significantly different from the investment required for manufacturing these same components in present refrigeration systems manufacturing.

- How can the high cost of magnetic heat pumps be reduced?

The two major recurring cost items in any magnetic heat pump are the magnetocaloric materials and the superconducting magnet assemblies.

We have been exploring these costs with several vendors. Our investigations have not been exhaustive by any means.

The information we have received is that cost reductions on the order of a factor of 2 to 4 can be obtained for the purchase of large quantities (100^+ metric tons/year) of magnetocaloric materials if the purchase contracts are firm and for multi-year delivery of fixed quantities on a fixed schedule basis.

These estimates were based on fixed wire cost. They did not consider future manufacturing process and wire technology development, i.e., future developments that could lead to reduced wire cost.

There are two other manufacturing cost reducing opportunities that we are investigating at this time:

1. There are indications that alternative magnetocaloric materials can be found that will be much cheaper than gadolinium.

2. The primary cost reducing opportunity lies in increasing the operating speed. If the operating speed of any specific design can be doubled or quadrupled, the manufacturing cost of the magnetocaloric material and superconducting magnet assemblies could be halved or quarted when measured on the basis of $/ton.

What funding or R&D partners do you have?

Astronautics work in magnetic refrigeration is presently supported by DOE's Oak Ridge National Laboratory in the construction of a 40 Watt, 50 K cryocooler. Other work is being supported by corporate funding. We are expecting the award of an additional contract for the design, construction and demonstration of a 4 K device in the near future. Additional proposals have been submitted to potential supporters, both in government and industry.

During the past 8 months, and continuing at this time, Astronautics has been seeking appropriate industrial partners with whom we can work to commercialize the technology we are developing. We have found interested parties and we are working jointly with them towards the objective of commercializing this technology.

We are interested in finding additional R&D and commercialization partners which we believe the broad applicability of magnetic refrigeration technology requires.

Is there a need for more continuous DOE/federal funding policy over 5 to 10 years?

We believe that there is. The history of the role of DOE/Federal funding in the development of magnetic refrigeration over nearly two decades provides an example of the problems that occur without continuity of funding in the development of a new technology.

It must be clearly stated that magnetic refrigeration technology generally, and magnetic refrigeration at Astronautics Corporation of America in particular, has benefitted greatly from DOE and other federal support over a period of about 18 years and that support is continuing at this time. However, this support has been discontinuous.

The U.S. government has shown a consistent pattern of backing efforts in magnetic refrigeration technology development to the point where projects were close to completion, then terminating the efforts and getting little benefit to the country from the investment.

Looking at the history of development of this technology leads one to believe that a good amount of luck has been required to enable the technology to evolve to the point it has:

- In the mid to late 1970's, DOE's Office of Basic Energy Sciences and EPRI supported Los Alamos National Laboratory's ealy efforts but

discontinued support in the early 1980's after feasibility had been demonstrated.

- In the early 1980's, NASA's Kennedy Space Center provided further support to Los Alamos for investigation of the application of magnetic refrigeration to hydrogen reliquefaction for Space Shuttle ground hydrogen storage systems.

  When the conceptual design of the system had been completed, a technology transfer of the key members of the Los Alamos staff to Astronautics Corporation of America took place in 1985. An RFP (request for proposal) was then issued by NASA KSC for construction of the device. THe RFP was withdrawn after bids were received, and the design was never built.

- The availability of funding through the Federal IR&D processes enabled Astronautics Corporation of America to fund the transfer of magnetic refrigeration technology from LANL to Astronautics Technology Center in Madison, Wisconsin and to support the technology development efforts until contract revenue began to be received.

- In the mid-1980's, ACA was funded by the SDIO/WAFB to build a 4K device and to further investigate regenerative devices. The 4K gas conduction/rotary prototype device ran into serious design problems, but a parallel alternative design demonstration of an active magnetic regenerative (AMR) device performed extremely well, demonstrating the ability of "Active Magnetic Regenerator" (AMR) devices to achieve high temperature single stage temperature span and high cooling power in a simple device. This was a key technical breakthrough overcoming the two major problems facing magnetic refrigeration up to the time this work was done.

  Project funding was terminated in the late-80's with SDI (Strategic Defense Initiative) program funding cutbacks and development of the AMR device was continued at a much slower rate with internal Astronautics funcing.

- In the same time frame, the Air Force backed Hughes Aircraft in a multi-million dollar design program to build a regenerative magnetic refrigerator in the 80 K range. The design was then changed to a 4 K device. The hardware was built but when experimental problems and design flaws appeared the program was terminated before the experimental problems and design flaws could be corrected.

- The DOE supported Idaho Falls National Laboratory in the design of a near room temperature magnetic heat pump. Modeling efforts showed that high efficiency was obtainable. A small scale device was

constructed. Difficulties were encountered with the water resistance of the adhesive. The program was cancelled before this problem could be addressed. The device is still in storage but has never been tested.

- The Navy constructed a near room temperature magnetic regenerator refrigerator test device that produced 50 K temperature span near room temperature. Sufficient funding was never obtained to thoroughly model the thermodynamics of the device. The first design iteration of the device failed to improve the performance and work has essentially stopped due to lack of funding.

- In the late 1980's, DOE funded Astronautics to design a hydrogen liquefier based on the use of active magnetic regeneration. The design of this device, based on the successful AMR, was completed and construction was begun. The technical quality of the deisgn was judged by DOE to be "excellent."

  Funding of the DOE/ACA "Magnetic Liquefier of Hydrogen" project was stopped in March of this year [1993] after a cost overrun combined with funding cutbacks at DOE. It is unlikely that funds will be found, under the present circumstances, in the amount required to construct the device.

  Largely as a result of the joint Astronautics/DOE hydrogen liquefier project work, the technical feasibility of near-room temperature application of magnetic heat pump technology has recently been established by Astronautics technical staff. This finding creats an additional and much more significant energy conservation opportunity. This is the opportunity to apply magnetic heat pump technology to a broad range of energy intensive industrial and commercial refrigeration applications at near-room temperatures — the primary goal of DOE.

  With the termination of the DOE contract, the technology commercialization efforts that were to be supported by DOE funds are stopped. These efforts are continuing to the extent they can be supported by Astronautics Corporation in an environment of "downsizing" of the market for the company's primary products — aircraft and aircraft related flight and ground instrumentation, display, and flight control systems for military and commercial aircraft and NASA space systems. Construction of a near-room temperature demonstraction device has been started with Astronautics funds.

Did you include power required for the liquid helium cooler, pumps, and other auxiliaries in your efficiency numbers?

The power required for the liquid helium cooler is included, but only in an approximate way. A detailed design was not performed. Therefore, an accurate

calculation of the heat leaks is not available. The power for the pump required to overcome pressure drop through the beds is included. This pressure drop is accurately computed. Additional pressure drop through piping and manifolding is not included, again, because no detailed design was performed. We feel this additional pressure drop will be small. Another omission is thermal conduction through structure other than the beds of magnetic material. We feel that this additional loss can be small through proper design.

Have you looked at chiller applications?

A chiller application was examined using a blended magnetic refrigerant. Hot and cold temperatures were 308 K (95°F) and 277 K (39°F). The COP was estimated to be 8.14 W/W, which is about 70% of Carnot. The estimate included power required by the cryocooler and power consumed by pump and drive inefficiencies. The cycle used a blended magnetic refrigerant which could contain primarily gadolinium or primarily transition metals alloyed with yttrium.

What is the availability of gadolinium?

A domestic producer estimated their current production capacity for gadolinium metal at 150,000 pounds per year. The reserves of ore are very large; the production capacity is sized to current demand. The producer anticipates the production rate could be tripled if demand justified it.

A foreign supplier estimated their production capacity at 200,000 pounds per year for gadolinium and 1,600,000 pounds per year for yttrium. Again, reserves are ample, and production can be maintained over a long term.

Questions and comments for Bob Foster about evaporative cooling:

Are there any geographic limitations on the use of evaporative cooling in southern California?

How far will demand side management by utilities in California redress marketing disadvantages for evaporative cooling?

What are the possibilities for global applications?

How does water use compare between evaporative cooling and mechanical cooling?

Can evaporative cooling systems be used to replace A/C unites in homes using existing air duct sizes?

Questions and comments for Jim Mattill about evaporative cooling for vehicular applications:

What are the technical obstacles to using evaporative cooling in passenger cars?

Questions and comments for Sonny Sundaresan about advanced fluorocarbon compression systems:

What is the view of Copeland about the trend to use hydrocarbons by major manufacturers in Europe?

Yes, some hydrocarbons would have to be considered for the standpoint of thermodynamic and general performance parameters. Our major concerns are the high risk and liability introduced with the flammability aspects of the refrigerants in our type of applications.

What is your view about the relative energy efficiency; lack of lubricant problems, and simplicity versus azeotropic blends?

Most HFC refrigerants we work with are near-azeotropes; some are so near they have basic characteristics of azeotropes like R-502. We have seen near-azeotrope HFC refrigerants with equivalent efficiency to that of propane. Only the HFC refrigerants need new lubricants such as polyolesters. Mineral oil lubricants with hydrocarbon refrigerants may still have issues regarding lubricity since there is no chlorine to give beneficial lubricity effects.

How might you approach hydrocarbon compressors from a global business point of view; and given your recognition of the need to reduce both direct and indirect GWP?

Our compressors can be adopted to work with hydrocarbons. However, the high risk and liability issues introduced with the flammability aspects of the refrigerants need to be considered.

Have you looked at the R-32/R-125 azeotrope as an R-502 alternative?

Yes; however, due to higher pressure and higher discharge temperatures, the 32/125 azeotrope is not considered a good R-502 alternative.

What vapor compression systems are possible at temperatures below -40°C? Many industrial processes (though a small market) require cooling in the range of -120°C to -40°C in relatively small capacities.

Cascade and two-stage systems, today, use our compressors in such applications with appropriate refrigerants.

Are today's compressors compatible with hydrocarbons?

Mostly, yes; some small modifications may be needed with motors and protectors.

Questions and comments for Kent Anderson about ammonia compression:

Please compare the energy efficiency of supermarket applications of ammonia using a secondary brine loop versus conventional systems having no secondary loop.

What vapor compression systems are possible at temperatures below -40°C? Many industrial processes (though a small market) require cooling in the range of -120°C to -40°C in relatively small capacities.

Could you expand on the potential retrofit market for R-22 chillers with ammonia; also that for new chillers that can be converted to ammonia at a later stage?

Please provide your view of the likelihood of finding new HFC blends to replace R-22, and whether the market for ammonia is therefore set to expand.

What is the relative energy efficiency gain of ammonia application over R-22; and versus proposed non-Class II; i.e. HFC blends, to replace R-22? Could you provide one example?

How do you address problems with pinhole leaks in aluminum tubing used in water systems?

Although ammonia has no ODP or GWP, the OSHA regulations are a limitation. Please comment.

Who is doing work on heat transfer enhancements for ammonia?

What are the issues with using ammonia in auto A/C? Is anybody seriously looking at ammonia for auto A/C?

I know of two incidents in Madison, WI over the past several years where ammonia plants have burned. What are the statistics regarding plant safety?

Questions and comments for Joe Marsala about absorption cooling:

Assuming that gas is the chosen prime energy source, what are the pros and cons of using absorption systems versus gas-fired engine driven vapor-compression cooling systems?

As I understand the technologies, if you compare a HCFC-123 vapor compression chiller and a commercial 2 stage absorption system, built to comparable cost conditions; that the vapor compression system would always use less energy (CO_2) emissions, when operated in any typical U.S. power grid. I recognize that absorption would always be preferred if a source of waste heat is available as a driver.

During the 1960s the ammonia/water absorption manufacturers were subsidized by the gas industry which permitted the equipment to be sold at competitive first cost. The market disappeared when the subsidies were discontinued.

For ammonia/water GAX, how do the energy efficiency estimates compare with energy efficiency for conventional vapor compression systems?

Questions and comments for Jay Kohler about absorption cooling:

Are you aware of the California Energy Commission (CEC) program over the last 5 years to on-site demonstrate a solar panel/absorption residential-light commercial (1 to 5 ton) A/C system; and the interest of CEC and California utilities to reduce summertime energy demand? Has York considered this pairing as a market opportunity in the California market given the energy policy environment there? Similarly, what are the potential markets in developing countries?

The economics of absorption are largely affected by electric demand rates.

Given present day economics, we do not see a significant market for solar powered absorption chillers.

As I understand the technologies, if you compare a HCFC-123 vapor compression chiller and a commercial 2 stage absorption system, built to comparable cost conditions; that the vapor compression system would always use less energy (CO_2) emissions, when operated in any typical U.S. power grid. I recognize that absorption would always be preferred if a source of waste heat is available as a driver.

The most extensive study on this topic which I am aware of is the 'Energy and Global Warming Impacts of CFC Alternative Technologies' sponsored by AFEAS and DOE. My understanding is that this statement is true in most, but not necessarily all cases. The conclusions depend on many assumptions, such as chiller efficiency, electrical power generation and transmission efficiency, and fuel source.

How does the part-load efficiency of absorption chillers compare to vapor compression systems?

The answer depends on the specific conditions involved. In general the part load efficiency of an absorption chiller is comparable to that of a vapor compression chiller.

What are the regulations and environmental concerns regarding disposal of LiBr at the end of the life of the equipment? Are there accident or service scenarios in which the Br can be oxidized or otherwise get into the atmosphere (bromine bearing compounds have large ODP)?

I am not aware of any federal regulations restricting disposal, however state and local regulations may apply, making a response difficult. It is highly unlikely for the bromide to be oxidized or otherwise get into the atmosphere.

Questions and comments for Andy Lowenstein about desiccant cooling:

Given your contention that liquid desiccants could allow comfort cooling in all regions (± evaporative elements), what are the obstacles in the industry to manufacturing?

The obstacles facing the commercialization of liquid desiccant air conditioners are the same facing many advanced HVAC technologies. Perhaps the most significant one is the fact that the engineers that specify and design HVAC systems are averse to new technologies, preferring instead to work with equipment that has been successful for them in the past. This problem is most acute for liquid desiccant air conditioners since they have yet to be proven in field tests and their lifetime ownership costs are not well quantified.

Are you familiar with New Thermal Technologies solar powered evaporative/desiccant systems, what kind of market potential—for example in southern California—do you see for solar heat/liquid desiccant systems?

I am not familiar with the New Thermal Technologies system. The cost of solar collectors that can deliver heat at between 160° F and 250° F and the cost of thermal storage systems are both too high and the cost for electricity too low for a solar/desiccant cooling system to be competitive now in any part of the country. However, advances on both collectors and storage systems will bring down their costs. Furthermore, environmental and natural resource concerns can be most effectively addressed with cooling systems that use a renewable fuel source. Southern California, which has high cooling requirements, abundant solar energy and stringent air quality standards, would be an excellent market for a solar/desiccant cooling system.

Is the Albers technology similar to your described salt/water system?

The Albers system is a liquid desiccant air conditioner that uses lithium bromide solutions as the desiccant. It is one embodiment of the general liquid desiccant air conditioner that I described.

How do you compare with a Carnot efficiency?

The liquid desiccant air conditioner is an "open" system, i.e., water vapor is exchanged with the ambient in both the absorber and the regenerator. As such, it is not possible to define a Carnot efficiency for the system.

Questions and comments for Jim Coellner about desiccant cooling:

Could you expand on some of the problems experienced in interesting the HVAC industry in this technology?

What kind of geographical limitations in high humidity areas are taken into account?

Questions for Jack Jones about adsorption cooling:

What are the maximum and minimum electric to gas cost ratios across the U.S.?

The maximum and minimum electric cost/gas cost ratios across the U.S. are 7/1 and 3/1.

What are the environmental concerns with using large amounts of natural gas for air conditioning?

The natural gas that is burned for the regenerative adsorbent heat pump is burned in an external combustion manner. The pollutants are inherently much less than an internal combustion technique. Overall, the winter heating and summer cooling natural gas requirements are significantly less with this sorption heat pump device than for a conventional electrical vapor compression heat pump, considering electricity power generation inefficiencies. Thus this system should be considerably more environmentally friendly than present existing systems. There is, however, always the problem of fossil fuel greenhouse gas exhaust, even though this sorption heat pump system produces less greenhouse gas than present systems.

Questions for Warren Rice about hydraulic refrigeration:

Have you considered using lower pressure refrigerants, such as pentane, as a way to reduce height requirements?

Yes, briefly. We concluded that to do so would result in negative gage pressure in the evaporator and that we would rather avoid that than enjoy the small reduction in required height that might result from using a lower pressure refrigerant. Also, the limitation on the amount of refrigerant that can be entrained in the water is one of volume ratio. The use of a lower pressure refrigerant would result in a lower mass flow ratio, refrigerant/water, and reduction in the EER and in the amount of refrigeration that could be produced using a given diameter downpipe. We are more inclined to use a higher pressure refrigerant to increase EER and capacity. Finally, we think that clathrate formation must be avoided. It is known that n-butane does not form a clathrate but most other hydrocarbons can do so.

Have you considered using the system as a heat engine?

Yes, but several other organizations are actively involved in that effort which has progressed through several experimental generations. More information can be obtained by contacting:

Mr. V. H. Cover, President
ThermEcon
Box 404
4725 Sunrise Drive
Tucson, Arizona 85718

Questions for Greg Swift about hydraulic refrigeration:

What are the maximum working pressures with liquid CO_2?

Currently we plan on 20 MPa (2900 psia).

How does the $\Delta P/P_m$ ($\Delta P=P_{max}-P_{min}$; $P_m=P_{mean}$) for the different working fluids impact the engine weight/power density and efficiency issue?

Power density's dependence on $\Delta P/P_m$ is easy to explain: Basically, weight is almost proportional to P_m and cooling power is almost proportional to ΔP, so $\Delta P/P_m$ should be as high as possible. Efficiency dependence is more difficult to explain. Our designes generally show a broad maximum in efficiency around $\Delta P/P_m \sim 0.3$. This represents a compromise among many competing effects (listed in Ref. 1 of "Malone Refrigeration" in proceedings of this workshop), such as adiabatic compression/ expansion losses at high ΔP and ordinary heat conduction at low ΔP.

Questions and comments for Marty Mathiprakasam about thermoelectric cooling:

A CPU computer chip cooler using Peltier has already been marketed. It's called the "Ice Cap." It cools the CPU to 0°C; it is mounted directly on top of the CPU and has in integral aluminum heat sink and tiny electric fan.

Stirling does 35 W at -50°C with 60 W input. How does the thermoelectric compare? And what would the requirements be for the rejection heat exchanger (size and fan requirements)?

How would you couple the cooler to the computer chip?

What would the COP be for removing 100 W at 200°K?

Questions for Sam Shelton about the Wave Air sorption system:

How well do the experimental data fit the modeling data and which were used to construct cost curves?

All data shown were arrived at by experimental testing of the Thermal Wave Solid Sorption refrigeration system. The only calculations used were for the evaporator and condenser temperatures/pressures to determine the evaporator and condenser test conditions. These were arrived at by using well established air coil heat exchanger data from air coil manufacturers. In fact, this air coil data should be conservative because it is for conventional refrigerants rather than ammonia refrigerant, which has much better heat transfer coefficients. Air coil testing is just beginning.

INTERNAL DISTRIBUTION

1. V. D. Baxter
2. R. S. Carlsmith
3. F. C. Chen
4. G. E. Courville
5. P. D. Fairchild
6–56. S. K. Fischer
57. W. Fulkerson
58. M. A. Kuliasha
59–109. P. J. Lewis
110. V. C. Mei
111. R. W. Murphy
112. R. B. Shelton
113. J. A. Shonder
114. J. J. Tomlinson
115. P. P. Wolff
116. ORNL Patent Office
117. Central Research Library
118. Document Reference Section
119–121. Laboratory Records (2)
122. Laboratory Records (Record Copy)

EXTERNAL DISTRIBUTION

123. Dr. Adolph, Hagenuk Fahrzeugklima GmbH, Kurt-Beyer-Str. 10-12, 04435 Schkeuditz, Germany
124. Stephen Andersen, U.S. Environmental Protection Agency, Director of Technology Transfer, Office of Air and Radiation, ANR-445, 401 M Street, SW, Washington, DC 20460
125. Kent Anderson, International Institute of Ammonia Refrigeration, 1101 Connecticut Avenue, NW, Ste. 700, Washington, DC 20036-4303
126. Didier Arnaud, Technical Development Manager in Refrigeration and Air Conditioning, Elf Atochem, Centre d'Application de Levallois, 95 rue Danton, 92 303 Levallois-Perret
127. P. Bakken, Coordinator Air Pollution, Ministry of Environment, P.O. Box 8013, 0032 Oslo 1, Norway
128. W. A. Belding, Innovative Research Enterprises, 84 La Pera Court, Danville, CA 94526
129. Dr. Bellmann, Deutsche Forschungsanstalt für Luft- und Raumfahrt e.V., Projekttraeger Umweltschutz (UST), Suedstr. 125, 53175 Bonn 2, Germany
130. David Berchowitz, Sunpower, 6 Byard Street, Athens, OH 45701
131. Don Bivens, DuPont, P.O. Box 80711, Wilmington, DE 19880-0711
132. D. R. Bohi, Director, Energy and Natural Resources Division, Resources for the Future, 1616 P Street NW, Washington, D.C. 20036
133. Dr. Holger Brackemann, Umweltbundesamt, Postfach 33 00 22, D-14191, Berlin, Germany
134. Hans Bräutigam, Solvay Fluor und Derivate GmbH, Postfach 220, D-30002 Hannover, Germany
135. Clark Bullard, University of Illinois at Urbana-Champaign, Air Conditioning and Refrigeration Center, Department of Mechanical and Industrial Engineering, 140 Mechanical Engineering Building, MC-244, 1206 West Green Street, Urbana, IL 61801
136. Charles Bullock, Carrier Corporation, P.O. Box 4808, Carrier Parkway, Syracuse, NY 13221

137. Bundesministerium für Umwelt - IG 1-3, Herrn MinR Weber, Kennedyallee 5, D-53175 Bonn, Germany
138. Hr. Bürgel, AEG Hausgeräte AG, Lilienthalstr. 150, 34123 Kassel, Germany
139. Glen Campbell, Babcock & Wilcox, Marketing & New Business Development, P.O. Box 785, Lynchburg, VA 24505-0785
140. Nick Campbell, ICI Chemicals & Polymers Ltd., Chemical Products, P.O. Box 13, The Heath, Runcorn, Cheshire WA7 4QF, United Kingdom
141. Nigel Carpenter, ICI Chemicals & Polymers, Ltd., Technical Service Manager Refrigeration, P.O., Box 13, Heath Runcorn, Cheshire WA7 4QF, England
142–742. Whitney Carroll, AFEAS Administrative Assistant, SPA-AFEAS, The West Tower, Suite 400, 1333 H Street, NW, Washington, DC 20005
743. James Coellner, Vice President, Engineering, ICC Technologies, 441 North Fifth Street, Philadelphia, PA 19123
744. Dave DaCosta, Ergenics, Inc., 247 Margaret King Avenue, Ringwood, NJ 07456
745. B. d'Aubarede, Solvay S.A., Dirction Alcalis/Produits organiques, rue du Prince Albert 33, B-1050 Brussels, Belgium
746. John Davey, Senior Development Technologist, Rhone Poulenc Chemicals, P.O. Box 46, Avonmouth, Bristol BS11 9HP, England
747. Gary Davis, Center for Clean Products and Clean Technologies, University of Tennessee, 327 South Stadium Hall, Knoxville, TN 37996
748. Anthony J. DeGregoria, Astronautics Corporation of America, Astronautics Technology Center, 5800 Cottage Grove Road, Madison, WI 53716
749. Tom Dekleva, ICI Klea, CEL Site, Bldg. L-21, Cherry Lane, New Castle, DE 19720
750. M. Delvin, Head of Section, Ministry of Environment and Energy, S10333, Stockholm, Sweden
751. Mr Deschamps, Environment Ministry, 14, Boulevard du Général Leclerc, 92524 Neuilly Cedex, France
752. Dave Didion, National Institute of Standards and Technology, Building Environment Division, Building 226, Room B114, Gaithersburg, MD 20899
753. Manfred Doehlinger, Mauerstrasse 15, 3140 Northeim, Germany
754. Piotr Domanski, National Institute of Standards and Technology, Thermal Machinery Group, Building 226, Room B-114, Gaithersburg, MD 20899
755. Frau Dr. F. Druckery, Berband der chemischen Industrie e.V., Karlstr. 21, D-60329 Frankfurt am Main, Germany
756. T. E. Drabek, Professor, Department of Sociology, University of Denver, Denver, CO 80208-0209
757. Paul Dugard, ICI Americas Inc., General Chemicals, Tatnall 2nd Floor, Wilmington, DE 19897
758. Damian Durrant, Greenpeace, 1436 U Street, NW, Washington, DC 20009
759. Tom Edwards, DynEco International Inc., 1426 Gleneagles Way, Rockledge, FL 32955
760. Dr. Eggers, Umweltbundesamt, Postfach 33 00 22, D-14191 Berlin, Germany
761. Kevin Fay, Alliance for Responsible CFC Policy, 2111 Wilson Boulevard, Suite 850, Arlington, VA 22201
762. Daniel Fischbach, Foster-Miller Inc., 350 Second Avenue, Waltham, MA 02154-3489
763. Robert Foster, The Evaporative Cooling Institute, Southwest Technology Development Institute, New Mexico State University, Box 30001, Las Cruces, NM 88003-0001

764. James Franklin, Solvay S.A., Rud de Ransbeek 310, 1120 Brussels, Belgium
765. Cynthia Gage, U.S. Environmental Protection Agency, M/D 62B, Highway 54 and Alexander Drive, Research Triangle Park, NC 27711
766. Steve Garrett, Department of Physics, PH/GX, Naval Postgraduate School, Monterey, CA 93943
767. Paul Glamm, Engineering Manager, The Trane Company, 3600 Pammel Creek Road, Lacrosse, WI 54601-7599
768. Dr. Glatzel, Umweltbundesamt, Postfach 33 00 22, D-14191 Berlin, Germany
769. A. Godfrey, Department of the Environment, Global Atmosphere Division, Romney House, 43 Marsham Street, London SW1P 3PY, UK
770. Victor Goldschmidt, Ray W. Herrick Laboratories, School of Mechanical Engineering, Purdue University, West Lafayette, IN 47907
771. David Goldstein, Natural Resources Defense Council, 71 Stevenson Street, Suite 1825, San Francisco, CA 94105
772. Eric Granryd, Royal Institute of Technology, Department of Applied Thermodynamics and Refrigeration, S-10044 Stockholm, Sweden
773. Hr. Grosskopf, KUK Kunststoff- und Kaeltetechnik GmbH, Weidkamp 274, 45356 Essen, Germany
774. Hr. Günther, Foron Hausgeräte GmbH, Arnsfelder Str. 4, 09518 Niederschmiedeberg, Germany
775. Herrn Dr. Rainer Grieshammer, c/o Enquète Kommission Schutz des Menschen und der Umwelt, Bundeshaus, Görresstr. 15, D-53113 Bonn, Germany
776. Liney Guidry, Business Manager Fluorocarbons, LaRoche Chemicals Inc., Airline Highway, P.O. Box 1031, Baton Rouge, LA 70821
777. Mike Harris, ICI Chemicals & Polymers Ltd., Chemical Products, P.O. Box 13, The Heath, Runcorn, Cheshire WA7 4QF, United Kingdom
778. Andrew Harvey, Foster-Miller, Inc., 350 Second Avenue, Waltham, MA 02154-1196
779. Donna Hawkins, CE-40, 6A-081/FORSTAL, U.S. Department of Energy, 1000 Independence Avenue,, SW, Washington, DC 20585
780. Hr. Hay, KFA Juelich GmbH, Postfach 19 13, 52428 Juelich, Germany
781. D. Henningsen, Directorate-General XI, Commission of the European Communities, DG XI, Rue de la Loi, B-1049 Brussels, Belgium
782. Dr. Henrici, Linde Ag, Suerther Hauptstr. 178, 50999 Koeln, Germany
783. Tom Hersey, New Thermal Technologies, 12900 Automobile Blvd., Clearwater, FL 34622
784. Dr. Hesse, FKW GmbH, Dorotheenstrasse 1, 30419 Hannover, Germany
785. Tom Hofler, Department of Physics, PH/HF, Naval Postgraduate School, Monterey, CA 93943
786. John Hoffman, Global Change Division, U.S. Environmental, Protection Agency, 401 M Street SW, 6202J, Washington, DC 20460
787. D. Hufford, U.S. Environmental Protection Agency, Office of Air Programs, Stratospheric Ozone Protection Division, Mail Code 6205-J, Washington, DC 20460
788. Michael Hughes, Allied-Signal, Technical Supervisor, Buffalo Research Laboratory, 20 Peabody Street, Buffalo, NY 14210
789. Hans Jaspers, Akzo Chemicals BV, Chemicals Division, Stationsstraat 48, P.O. Box 247, 3800 AE Amersfoort, The Netherlands
790. Mike Jeffs, ICI Polyurethanes, Everslaan 45, B-3078 Everberg, Belgium

791. Jack Jones, Jet Propulsion Laboratory, Cal Tech, Mail Station 157-102, Pasadena, CA 91109
792. Brian D. Joyner, Rhône-Poulenc Chemicals Ltd., St. Andrews Road, Avonmouth, Bristol BS11 9HP, United Kingdom
793. Dongsoo Jung, CFC Alternatives System Engineering Research Institute, Department of Mechanical Engineering, Inha University, Incheon, Korea, 402-751
794. Hr. Kaiser, Bock GmbH & Co. Kaeltemaschinenfabrik, Kisslingstr. 20, 72622 Nuertingen, Germany
795. Toshihiko Kawano, Daikin Industries Ltd., Safety, Health, and Environment Division, 1-1, Nishi-Hitosuya, Settsu-shi, Osaka 566 Japan
796. Jay Kohler, York International Corp., P.O. Box 1592-191A, York, PA 17405-1592
797. Sekhar Kondepudi, Electric Power Research Institute, 3412 Hillview Avenue, P.O. Box 10412, Palo Alto, CA 94303
798. Dr. König, Volkswagen AG, Postfach, 3180 Wolfsburg 1, Germany
799. Bill Kopko, Program Manager for Refrigeration, Global Change Division, U.S. Environmental, Protection Agency, 401 M Street SW, 6202J, Washington, DC 20460
800. Dr. H. Kraus, Bundesministerium für Umwelg, IG2-5, Kennedyallee 5, D-53175, Germany
801. Wayne Krill, Electric Power Research Institute, 3412 Hillview Avenue, P.O. Box 10412, Palo Alto, CA 94303
802. Dr.-Ing. Horst Kruse, Universitat Hannover, Institut fur Kaltetechnik, und Angewandte, Warmetechnik, 300 Hannover 1, Welfengarten 1A, Germany
803. Lambert Kuijpers, Technical University, W & S /4 Building, P.O. Box 513, NL-5600 MB Eindhoven, The Netherlands
804. Esher Kweller, EE-422, 5H048/FORS, U.S. Department of Energy, 1000 Independence Avenue, SW, Washington, DC 20585
805. J. Lamont, Department of Trade and Industry, Environment Unit, 151 Buckingham Palace Road, London SW1W 9SS, UK
806. Daniel Lashoff, Natural Resources Defense Council, 1350 New York Avenue, Washington, D.C. 20005
807. Prof. Laue, FIZ Karlsruhe, 76344 Eggenstein-Leopoldshafen, Germany
808. Dave Laybourn, Pacific Gas & Electric, 444 Market Street, Room 1652, P.O. Box 770000, San Francisco, CA 94177
809. Stephen Lee-Bapty, Global Atmosphere Division, Department of the Environment, 43 Marsham Street, Romney House, London SW1P 3PY, United Kingdom
810. Hugo Lever, CEFIC, 1, Avenue Nieuwenhuyse - Boîte 2, B-1160 Bruzelles, Belgique
811. Herrn Dr. Klaus Lippold MdB, Bundeshaus, Görresstr. 15, D-53113 Bonn, Germany
812. Prof. Helmut Lotz, Bosch-Siemens Hausgeräte GmbH, Postfach 12 20, 89537 Giengen/Br., Germany
813. Andy Lowenstein, AIL Research, Inc., 18 Cameron Court, Princeton, NJ 08540
814. Louis Lucas, International Institute of Refrigeration, 177 Bd Malesherbes, 75017 Paris, France
815. Tim Lucas, Sonic Compressors, Inc., 1054 Technology Park Drive, Glen Allen, VA 23060
816. Massimo Lupi, Ausimont S.P.A., via Principe Eugenio 1/5, 20155 Milano, Italy
817. Jean Lupinacci-Rausch, Global Change Division, U.S. Environmental, Protection Agency, 401 M Street SW, 6202J, Washington, DC 20460
818. Joe Marsala, Senior Project Manager, Desiccant & Absorption Technologies, Gas Research, Institute, 8600 West Bryn Mawr Ave., Chicago, IL 60631

819. B. Mathiprakasam, Midwest Research Institute, 425 Volker Boulevard, Kansas City, MO 64110
820. James F. Mattil, Climatron Corporation, P.O. Box 3627, Englewood, CO 80155-3267
821. C. D. MacCracken, President, Calmac Manufacturing Corporation, P.O. Box 710, Englewood, NJ 07631
822. Mark McLinden, THermophysics Division, National Institute of Standards and Technology, Mail Station 838, Boulder, CO 80303-3328
823. Mark Menzer, Air Conditioning and Refrigeration Institute, 4301 North Fairfax, Suite 425, Arlington, VA 22203
824. Pauline Midgley, Ludwig Strasse 49, 7022 Leinfelden Musberg, Germany
825. John Millhone, EE-422, 5H048/FORS, U.S. Department of Energy, 1000 Independence Avenue, SW, Washington, DC 20585
826. Alan Miller, Center for Global Change, University of Maryland, 7100 Baltimore Avenue, Suite 401, College Park, MD 20740
827. Peter Miller, Natural Resources Defense Council, 71 Stevenson Street, San Francisco, CA 94105
828. Yoshi Mineno, Daikin U.S. Corporation, Manager Corporate Planning, 375 Park Avenue, Suite 3308, New York, NY 10152
829. Ed Miniatt, Stirling Thermal Motors, 275 Metty Drive, Ann Arbor, MI 48103
830. Dr. Mosemann, Kuehlautomat Berlin GmbH, Segelfliegerdamm 1-45, 12487 Berlin, Germany
831. Prof. Franz Nader, Verband der chemischen Industrie e.V., Karlstr. 21, D-60329 Frankfurt am Main, Germany
832. Michael Nilles, Babcock & Wilcox, P.O. Box 785, MC-80A, Lynchburg, VA 24505-0785
833. Office of Assistant Manager for Energy Research and Development, U.S. Department of Energy, Oak Ridge National Laboratory, Oak Ridge, TN 37831-6269
834. Michael Oppenheimer, Environmental Defense Fund, 257 Park Avenue South, New York, NY 10010
835. Bob Orfeo, Allied-Signal, Inc., Fluorine Products Division, Buffalo Research Laboratory, 20 Peabody Street, Buffalo, NY 14210
836. Bill Osborne, Vice President & General Manager Corporate Operations, LaRoche Chemicals Inc., P.O. Box 1031, Baton Rouge, LA 70821
837. OSTI, U.S. Department of Energy, 175 Oakridge Turnpike, Oak Ridge, Tennessee 37831
838. Mr. Von O'Svath, Commission of the European Communities, DGIII, Rue de la Loi 200, B-1040 Bruxelles, Belgique
839. Toshio Otaka, Toshiba Corporation, Air Conditioners & Appliances Engineering Laboratory, 8, Shinsugita Isogo-ku, Yokohama 235, Japan
840. Brian Park, Oceaneering Space Systems, 16665 Space Center Boulevard, Houston, TX 77058
841. David Perkins, Naval Postgraduate School, Space Systems Academic Group, Bldg. 233, Room 102, Monterey, CA 93943
842. Ahmad Pesaran, Senior Engineer, National Renewable Energy Laboratory, 1617 Cole Boulevard, Golden, CO 80401
843. Dr. Karl-Heinz Pieper, Bundesministerium für Wirtschaft - IV B2, Villemombler Str. 76, D-53107 Bonn, Germany
844. Reinhard Radermacher, University of Maryland, Dept. of Mechanical Engineering, 2177D, Engineering Classroom Bldg, College Park, MD 20742-3035

845. J. Reed, Environment Canada, 14th Floor, Place Mincent Massay, Ottawa, Ontario K1A 0E7, Canada
846. Dr. Reinhart, Sulzer Escher Wyss, Germany
847. Warren Rice, Arizona State University, Department of Mechanical, and Aerospace Engineering, Box 875806, Tempe, AZ 85287-6106
848. Dr. Rinne, Institüt für Kaeltetechnik und Angewandte, Wärmetechnik, Welfengarten 1a, 30167 Hanover, Germany
849. Pete Riggle, Stirling Technology Company, 2952 George Washington Way, Richland, WA 99352
850. Bill Ryan, Gas Research Institute, 8600 West Bryn Mawr Avenue, Chicago, IL 60631
851. John Ryan, EE-422, 5H048/FORS, U.S. Department of Energy, 1000 Independence Avenue, SW, Washington, DC 20585
852. Hidetoshi Sagawa, Japan Refrigeration and Air Conditioning Industry Association, Kikai Shinko Building 201, 5-8, Shibakoen 3-chome, Minato-ku, Tokyo 105, Japan
853. Shunichi Samejima, Asahi Glass America Inc., 450 Lexington Avenue, Suite 1920, New York, NY 10017-3911
854. Dr. Sartorius, Umweltbundesamt, Postfach 33 00 22, D-14191 Berlin, Germany
855. Dipl.-Ing. Wolfgang P. Scholten, Hoechst Aktiengesellschaft, F+E/GB-A, D 729, P.O. Box 800320, Bruningstrasse 50, D-6230 Frankfurt 80, Germany
856. J. B. Shrago, Director, Office of Technology Transfer, 405 Kirkland Hall, Vanderbilt University, Nashville, TN 37240
857. Herrn Schwanhold MdB, Bundeshaus, Görresstr. 15, D-53113 Bonn, Germany
858. Sekretariat der Enquète Kommission, Schutz der Erdatmosphäre, Bundeshaus, Görresstr. 15, D-53113 Bonn, Germany
859. Sekretariat der Enquète Kommission, Schutz des Menschen und der Umwelt, Bundeshaus, Görresstr. 15, D-53113 Bonn, Germany
860. Sam V. Shelton, Wave Air 290 14th Street, NW, Atlanta, GA 30318
861. R. Shende, UNEP/IE/PAC, OzonAction Programme, 39-43 quai Andre Citroan, 75739 Paris Cedex 15, France
862. Seiji Shin-ya, Asahi Glass Co. Ltd., Performance Chemicals Division, 2-1-2 Marunouchi, Chiyoda-ku, Tokyo 100, Japan
863. G. F. Sowers, Senior Vice-President, Law Companies Group, Inc., 114 Townpark Drive, Suite 250, Kennesaw, GA 30144-5599
864. Taryn Slote, Research Analyst, State of Vermont, Department of Public Service, 120 State Street, Montpelier, VT 05620-2601
865. Terry Statt, Electric Power Research Institute, 3412 Hillview Avenue, P.O. Box 10412, Palo Alto, CA 94303
866. Neil Stephansson, Vice President and General Manager, LaRoche Chemicals Inc., P.O. Box 1031, Airline Highway, Baton Rouge, LA 70821
867. David Stirpe, Alliance for a Responsible CFC Policy, 211 Wilson Boulevard #850, Arlington, VA 22201
868. Mr. Strongilis, Commission of the European Communities, DGXI, Rue de la Loi 200, B-1040 Bruxelles, Belgique
869. Jerry Sturgeon, Manager Refrigerant Systems Design, General Electric Appliances, Appliance Park, AP5-2N-96, Louisville, KY 40225

870. Sonny Sundaresan, Manager, Materials Engineering Systems Chemistry, Copeland Corporation, 1675 W. Campbell Road, Sidney, OH 45365
871. Len Swatkowski, Association of Home Appliance Manufacturers, 20 North Wacker Drive, Chicago, IL 60606
872. Richard Sweetser, American Gas Cooling Center, 1515 Wilson Boulevard, Arlington, VA 22209
873. Gregory Swift, Physics Division, Los Alamos National Laboratory, K764, Los Alamos, NM 87545
874. Dr. Thiele, Siemens AG, Unternehmensbereich KWU, Postfach 3220, 91050 Erlangen, Germany
875. David Tree, Ray W. Herrick Laboratories, School of Mechanical Engineering, Purdue University, West Lafayette, IN 47907
876. Shigehiro Uemura, Daikin Industries, Ltd., Section Manager, Global Environmental Department, Umeda Center Building, 2-4-12 Naketaki-Nishi, Kita-Ku, Osaka 530, Japan
877. Maurice Verhille, Elf Atochem S.A., 4, Cours Michelet, La Defense 10, Cedex 42, 92091 Paris la, Defense, FRANCE
878. Tony Vogelsberg, E.I. du Pont de Nemours & Co., Inc., Fluorochemicals Division, 1007 Market Street (B-13220), Wilmington, DE 19898
879. Hiroyuki Wada, Daikin U.S. Corporation, 375 Park Avenue, Suite 3308, New York, NY 10152
880. C. M. Walton, Ernest H. Cockrell Centennial Chair in Engineering and Chairman, Department of Civil Engineering, University of Texas at Austin, Austin, TX 78712-1076
881. T. Waltz, 1818 H. Street NW, Washington, DC 20433
882. Peter Weissenborn, Ander Wolfssiese 2, D-38667 Bad Harzburg, Germany
883. J. Whitelaw, Assistant Secretary, Department of the Arts, Sports, the Environment, Tourism and Territories, P.O. Box 787, Canbera ACT 2600, Australia

☆ U.S. GOVERNMENT PRINTING OFFICE: 1994 — 550-165/80020