ORNL/TM-5525

The Annual Cycle Energy System: Initial Investigations

H. C. Fischer
J. C. Christian
E. C. Hise
A. S. Holman
A. J. Miller
W. R. Mixon
J. C. Moyers
E. A. Nephew

OAK RIDGE NATIONAL LABORATORY
OPERATED BY UNION CARBIDE CORPORATION FOR THE ENERGY RESEARCH AND DEVELOPMENT ADMINISTRATION

Printed in the United States of America. Available from
National Technical Information Service
U.S. Department of Commerce
5285 Port Royal Road, Springfield, Virginia 22161
Price: Printed Copy $4.50; Microfiche $2.25

This report was prepared as an account of work sponsored by the United States Government. Neither the United States nor the Energy Research and Development Administration/United States Nuclear Regulatory Commission, nor any of their employees, nor any of their contractors, subcontractors, or their employees, makes any warranty, express or implied, or assumes any legal liability or responsibility for the accuracy, completeness or usefulness of any information, apparatus, product or process disclosed, or represents that its use would not infringe privately owned rights.

ORNL/TM-5525

Contract No. 7405-eng-26

ENERGY DIVISION

THE ANNUAL CYCLE ENERGY SYSTEM: INITIAL INVESTIGATIONS

H. C. Fischer
J. E. Christian
E. C. Hise
A. S. Holman
A. J. Miller
W. R. Mixon
J. C. Moyers
E. A. Nephew

Research sponsored jointly by the U.S. Department of Housing and Urban Development and the Federal Energy Administration under Union Carbide Corporation contract with the Energy Research and Development Administration.

Date Published: October 1976

OAK RIDGE NATIONAL LABORATORY
Oak Ridge, Tennessee 37830
operated by
UNION CARBIDE CORPORATION
for the
ENERGY RESEARCH AND DEVELOPMENT ADMINISTRATION

CONTENTS

ABSTRACT iv

1. INTRODUCTION 1

2. THE ANNUAL CYCLE ENERGY SYSTEM (ACES) 3
   2.1 Historical Background 3
   2.2 Concept Description 4
   2.3 Climatic Influences on ACES Design and Application . . . 8
   2.4 Alternative Modes of ACES Operation 10
   REFERENCES FOR SECTION 2 13

3. FEASIBILITY OF ALTERNATIVE ACES APPLICATIONS 14
   3.1 Economic Assessment of ACES for Garden Apartments . . . 14
      3.1.1 Description of Mills Choice Apartments 15
      3.1.2 Actual energy consumption by Mills Choice Apartments 15
      3.1.3 Estimated energy consumption by ACES 19
      3.1.4 Estimated energy consumption by conventional system 22
      3.1.5 Economic comparison of ACES and conventional system 23
   3.2 ACES for a Single Family Residence 28
   REFERENCES FOR SECTION 3 31

4. COMPUTER PROGRAMS FOR ACES SYSTEMS DESIGN AND ANALYSIS . . . 32
   4.1 Heat Transfer Analysis 32
   4.2 ACES Performance Simulation 33
   REFERENCES FOR SECTION 4 34

5. COMPONENTS DESIGN AND TESTING 35
   5.1 Ice-Bin Structures 35
      5.1.1 Alternative ice-bin designs 35
      5.1.2 Ice-bin insulation requirements 38
   5.2 Ice-Freezing Coils 41
      5.2.1 Ice-coil performance tests 42
      5.2.2 Cooling-mode operation of ice-bin heat exchanger 45
   5.3 Heatron Evaporator Test 47
   5.4 Water-Heater Test 49
   5.5 Solar-Panel Test 51
   REFERENCES FOR SECTION 5 52

6. FUTURE PROGRAM ACTIVITIES 53
   6.1 Field Demonstrations 53
      6.1.1 Veteran's nursing home 53
      6.1.2 Single-family residence 53
   6.2 Commercialization 55
      6.2.1 Information exchange 55
      6.2.2 ACES design manual 56
      6.2.3 Component selection 56

APPENDIX A. ACES Components Test Assembly 57

ABSTRACT

Initial analytical and experimental investigations were conducted to establish data and design procedures prior to a demonstration of the Annual Cycle Energy System (ACES) in an actual building. ACES is an integrated system for supplying space heating and cooling, and domestic hot water to a building through the use of a heat pump, a thermal storage unit, and an outdoor radiative/convective panel. The heat pump extracts energy from a tank of stored water to provide winter heating. The ice that is formed is accumulated for subsequent use in meeting the cooling requirements of the building in the summer.

A components test assembly was constructed to measure the rates of heat transfer during ice buildup and brine chilling operations, to assess the design requirements of the evaporator and the desuperheater for producing domestic hot water using refrigerant superheat, and to investigate the mechanical stability characteristics of the ACES freezing coils which are submerged in the water storage tank. The findings of the experimental program are presented and analytical methods for optimally sizing system components according to the thermal characteristics of a building and the climatic zone where it is located are developed. The calculation of the annual coefficient of performance for the ACES is illustrated.

1. INTRODUCTION

This report describes the findings of the initial phase (January 1, 1975 to June 30, 1975) of the program for assessing the Annual Cycle Energy System (ACES). The ACES is an integrated system which uses a heat pump and a thermal-storage bin to provide space heating and cooling and domestic hot water. The heat pump extracts the required heat from a fixed volume of stored water which is converted into ice during the heating season. During the cooling season, the stored ice provides space cooling to the building and is melted.

The primary purpose of phase 1 activities was to assemble and to verify experimentally the design data required for a real-life demonstration of the ACES concept. The intent of the planned demonstration program is to accelerate industry acceptance of the energy-saving concept by acquainting the manufacturing, utility, and building construction industries with the advantages and cost effectiveness of ACES for residential and commercial applications.

Subsequent to the initial investigations described in this report an ACES demonstration house has been constructed in Knoxville, Tennessee. The ACES development program is now continuing under joint sponsorship of the Energy Research and Development Administration and the Department of Housing and Urban Development.

Following are the activities covered in the Phase I program:

1.1 System Analysis and Performance

Analytical investigations were conducted to establish a basis for materials and components selection and to determine the requirements of controls design. Computer programs were developed to assist in the design optimization of an ACES demonstration in an actual building. Tests were conducted to determine the performance and compatibility of systems components. The experimental work required the design, construction, and operation of an ACES components test assembly. This test assembly was used to explore possible mechanical-stability problems of the ACES heat-exchanger coils, which are submerged in the ice-storage tank, and to

verify the designs of the intermediate heat exchanger and of the heat exchanger for heating domestic hot water using refrigerant superheat. Heat-transfer rates during ice-buildup and brine-chilling.

1.2 Program Planning

Plans were developed for the construction (in Knoxville, Tennessee) of a single-family residential building equipped with an ACES. The performance of the system under realistic operating conditions will be measured to confirm the adequacy of the design procedures. Contacts with industrial organizations interested in ACES have been maintained and strengthened so that cooperation leading to an early commercialization of ACES can be achieved. The coordination of research and development efforts with industry will be maintained as an essential part of future ACES program activities.

2. THE ANNUAL CYCLE ENERGY SYSTEM

2.1 Historical Background

The Annual Cycle Energy System (ACES) offers an attractive means of providing heat from the latent heat of fusion of water. The ice produced by a water-to-air heat pump in the winter is stored to provide "free" air conditioning in the summer. To a great extent, the ACES concept is not really new. The idea of using a heat pump to heat houses was first suggested in 1852 by Lord Kelvin (William Thompson) in a paper presented before the Royal Society. The paper, entitled "On the Economy of Heating and Cooling of Buildings by Means of Currents of Air," was published in the December 1852 issue of the *Glasgow Philosophical Society Proceedings*. Today, air-to-air heat pumps have become quite common in many areas of the United States.

In the United States, interest in heat pumps was revived in the late 1920s, and in 1932 a paper by F. H. Faust et al., entitled "Application of Refrigeration to Heating and Cooling of Homes," was published. The paper suggested that extracting heat from an insulated tank of water, rather than from air, would be desirable because the efficiency of the heat pump would be increased. According to the paper, ". . . It has been suggested that the latent heat of the water be extracted by freezing it. In Washington (D.C.) the amount of ice formed during the winter in heating a 14,000-ft^3, well-insulated house would be 210 tons, or 7800 ft^3, which would make a pile about half the size of the house." This idea attracted the attention of H. C. Fischer,* who in the mid-1950s extended the concept to include keeping the ice formed at the end of the heating season and using it later for space cooling. In this way, the heating and cooling loads of a building are balanced over a complete annual cycle, greatly reducing the total expenditure of energy.

---

*H. C. Fischer was a colleague of F. H. Faust at the General Electric Company in the 1950s. Mr. Fischer is presently working as a consultant to the ACES program at the Oak Ridge National Laboratory.

2.2 Concept Description

The ACES is essentially a thermal-storage system for balancing the cyclic heating and cooling loads of a building. The ACES equipment requirements consist basically of a refrigerant compressor operating as a unidirectional heat pump, an air-cooled condenser for space heating, a water-cooled condenser for domestic water heating, a chilled-water coil for air conditioning, a brine-heated evaporator, ice-freezing coils, an ice bin, and a circulation system with controls. All of this equipment either is already commercially available or can be adapted from existing units. Figure 1 shows a schematic diagram of the system.

Heat is obtained by freezing the water located in the ice-storage structure (Fig. 1) and is pumped by the unidirectional heat pump for delivery to the building. During the summertime, the melting of the ice provides air conditioning to the building; at the same time, the summer heat is stored in the water by increasing the enthalpy of the water as it changes from the solid to the liquid state. The cycle is repeated each year, and the major energy input is simply the energy required to operate the heat pump during the heating season.

Figure 2 illustrates typical operating conditions for the ACES as contrasted with the conventional air-to-air heat pump. As shown, the ACES heat pump operates between rather constant evaporating and condensing temperature limits of 20 and 105°F respectively. Thus, the system can be optimized to these temperatures to obtain a high coefficient of performance (COP). Using compressors currently available, a COP of 3.5 can be reached on the heating cycle; moreover, the use of high-efficiency compressors now coming on the market may enable a COP of 4.0 to be achieved on the heating cycle alone.

In assessing the overall performance of the ACES, however, both the heating and cooling cycles must be taken into account. Because both the heating and cooling capacity of the heat pump are utilized beneficially, the average annual COP of the system is increased. The annual COP of the ACES, neglecting system losses, is defined as

$$\text{COP (annual)} = \frac{\overset{\text{(heating)}}{\text{heat of rejection}} + \overset{\text{(cooling)}}{\text{heat of absorption}}}{\text{electrical energy input}} .$$

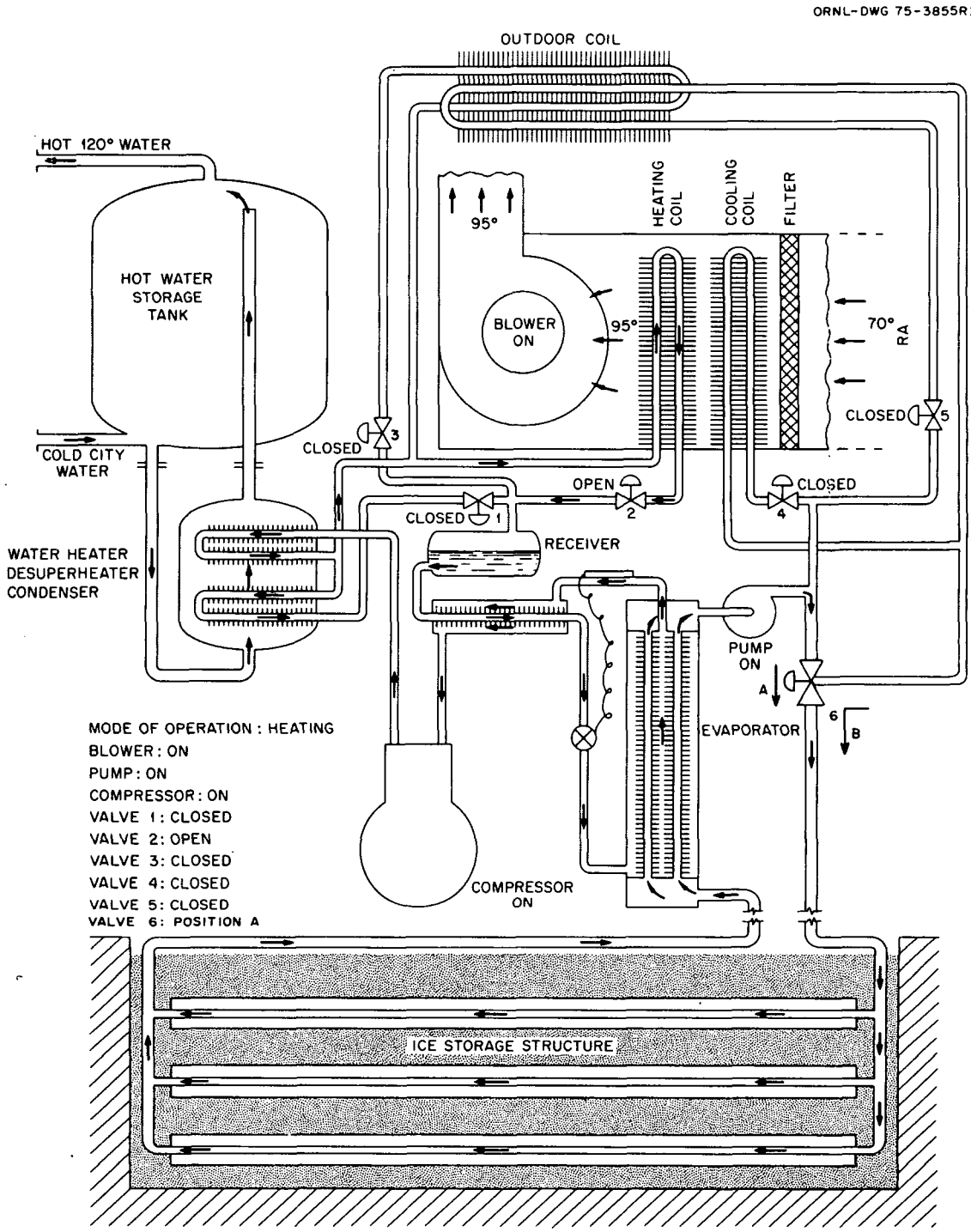

Fig. 1. Schematic diagram of the ACES as applied to a single-family residential building.

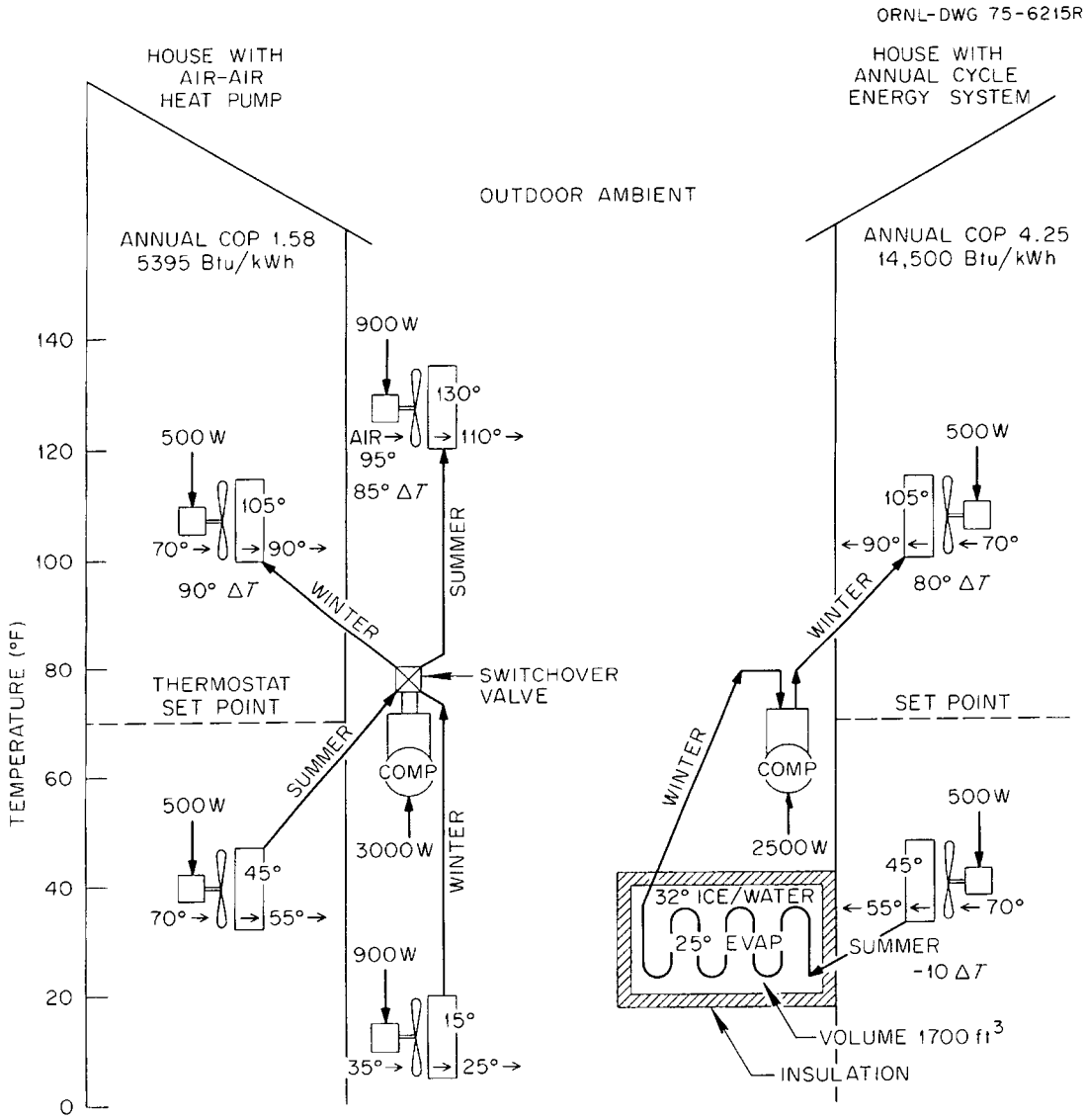

Fig. 2. Air-to-air heat pump vs ACES heat pump, showing typical operating conditions.

In estimating the actual COP of the ACES, system losses must be taken into account. These losses result primarily from pumping power requirements and from heat leakage into the ice bin. Heat leakage into the bin during the cooling season is undesirable because the amount of ice available for air conditioning is reduced. The results of preliminary investigations indicate that, depending on the size of the water-storage tank,

proper insulation of the top, sides, and bottom of the tank can reduce the average monthly rate of heat leakage to about 3% of the tank's thermal-storage capacity. On this basis the actual annual COP of the ACES is estimated to be about 4.25, using present technology. With new high-efficiency compressors, the annual COP of the ACES would be approximately 5.

2.3 Climatic Influences on ACES Design and Application

Under optimum climatic conditions, the annual COP of the ACES heat-pump system may be as high as 5 because both heating and cooling outputs of the heat pump are used. In 80% of the United States, the heating and cooling requirements are in balance or can be brought into balance for a well-insulated building. Reduction of ice-bin insulation, gain of heat from the outside air, or use of solar panels or outside air coils are possible means for compensating for heating- and cooling-load imbalances in the North. In the South, occasional supplemental compressor operation as an off-peak ice maker may be necessary in the summer. In general, the quantity of water to be frozen should be such that the amount of heat energy obtained is sufficient to supply the heating load of the building through the coldest 12 weeks of the heating season.

Obviously, in the progression toward more northerly latitudes, the winter heating loads increase and the summer cooling loads decrease. If only the heating and cooling loads of a well-insulated residential building are considered, they are found to be in balance at a latitude of about 38° N. However, if domestic hot-water heating is added to the space-heating load, the balance point shifts southward to a latitude of about 36° N (about the latitude of Nashville, Tennessee). The balance point for a poorly insulated home is farther south than for a well-insulated one. In areas north of the balance point, steps must be taken to prevent the buildup of more ice in the winter than is necessary for summer cooling. This control can be achieved by using some alternative heat source, such as solar energy, to impede the formation of ice and to bring the bin size into balance with the summer cooling requirements. Solar energy is abundantly available for this purpose during both the early (September through October) and late (March through May) portions of the heating season.

The thermal storage and solar energy collection requirements for a well-insulated 1800-ft^2 house equipped with an ACES have been estimated for different locations in the United States. Figure 3 shows the variations in required ice-storage volume, solar panel size, and supplementary

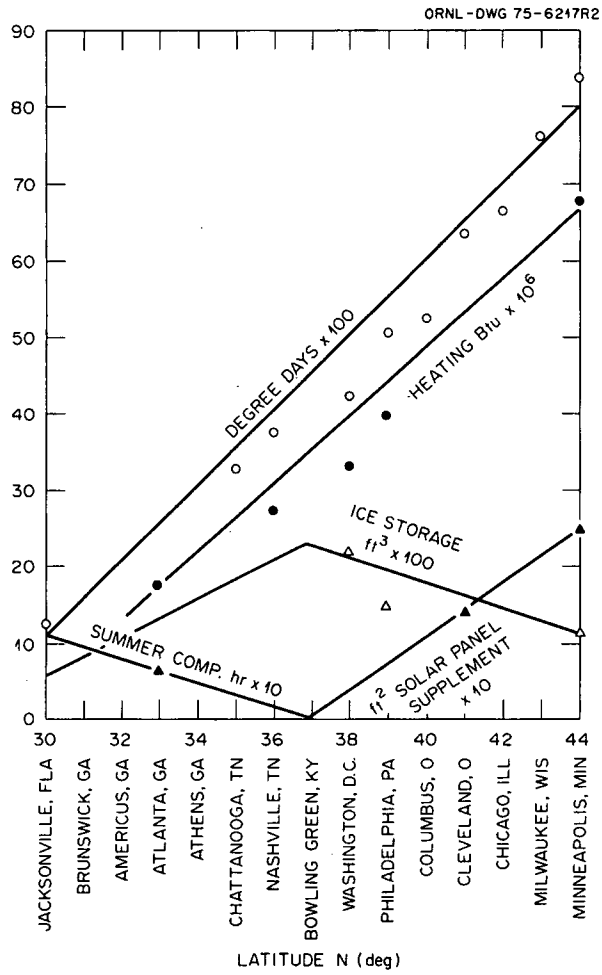

Fig. 3. Effect of latitude on heating load, ice storage, solar panel size, and supplemental compressor operation for ACES-equipped house.

summertime compressor operation for geographical locations ranging from Florida to Minnesota. In Minneapolis, at the northern end of the normal ACES territory, ACES supplies all of the air-conditioning load, all of the domestic hot-water load, and 31% of the space-heating load. The remaining 69% of the space-heating load is furnished by supplementary solar panels. In the Minneapolis region, about 250 ft^2 of solar panel in the form of a vertical solar wall or fence is required to collect the 46.6 million Btu of energy needed to balance seasonal heating and cooling

loads. The collected solar energy is stored in the ice-storage bin and elevated to space-heating temperature by the ACES heat pump.

In Atlanta, an ACES would provide the house considered above with all the energy required for space heating and for domestic water heating and would meet 58% of the summer air-conditioning needs. The remaining 42% of the air-conditioning load could be shifted to nighttime operation to take advantage of better operating conditions and lower off-peak electric rates. Whether or not ACES can be applied economically in locations farther south than Atlanta depends on the seasonal power-rate structure of the given locality.

2.4 Alternative Modes of ACES Operation

While the ACES is intended primarily to provide space heating and cooling of buildings, it can also be used to produce domestic hot water. Water heating is important because in many climatic zones the energy required for this purpose constitutes a substantial portion of the total energy requirement of the building. For example, calculation for a 2000-ft^2 single-family home in Knoxville, Tennessee, show that the annual energy consumptions for space heating, for space cooling, and for water heating are, respectively, 43.8 million, 22.7 million, and 16.2 million Btu/year. These calculations are based on assumed heat losses through building sections in accordance with HUD minimum property standards.[1]

In the ACES design shown in Fig. 1, high-temperature superheated refrigerant vapor is pumped to a desuperheater condenser to produce domestic hot water at a minimum temperature of 120°F. During mild weather and during summer months, the compressor is operated several hours each day to meet the domestic water-heating load. At the same time, ice is produced and stored for use in space cooling. Either the solar panel or an air-cooled condenser can be used to dissipate to the atmosphere the waste heat generated by summertime compressor operation.

The primary objective in ACES design is to match the capacity of system components with the thermal characteristics of the building. The system must possess a high degree of operating flexibility to satisfy the

range of heating and cooling conditions that will normally be encountered over a seasonal cycle. Figure 4 depicts an ACES for an apartment complex in which the individual apartments are served by a common storage bin located in the basement of the apartment building. In this design, liquid refrigerant from the accumulator is circulated directly through heat-exchanger coils submerged in the water-storage bin.

The various modes of operation obtainable with the ACES shown in Fig. 1 are listed in Table 1. The first operating mode listed in the table provides space heating to the building during the winter months. Compressor heat and latent heat of fusion of water are delivered to the room by a heat-exchanger coil located in the forced-air circulation duct. Ice is formed in the water bin and accumulated to provide summer air conditioning. In the primary space-cooling mode, a methanol-and-water brine is chilled by passage through the coils of the ice-bin heat exchanger and then circulated through a cooling coil located in the air-circulation duct. Forced-air circulation around the cooling coil provides air conditioning for the building. An ACES automatic control system selects the appropriate mode of operation according to need.

Table 1. Possible operating modes for the ACES

Mode of operation	Compressor	Air blower	Water pump	Valve Position[a]					
				1	2	3	4	5	6
Space heating/ice building	On	On	On	C	O	C	C	C	A
Space cooling, mode 1	Off	On	On				O	C	B
Space cooling heat rejection to outside	On	On	On	C	C	O	O	C	B
Water heating/ice building	On	Off	On	O	C	C	C	C	A
Water heating and cooling, mode 1	On	On	On	O	C	C	O	C	B
Ice melting	Off	Off	On				C	O	B
Space cooling, water heating	On	On	On	O	C	C	O	C	B
Ice buildup, heat rejection to outside	On	Off	On	C	C	O	C	C	A

[a]Valves 1, 2, and 3 control the refrigerant flow; valves 4, 5, and 6 control the brine flow. Valve position: C = closed, O = open, A and B = positions as depicted in Fig. 1.

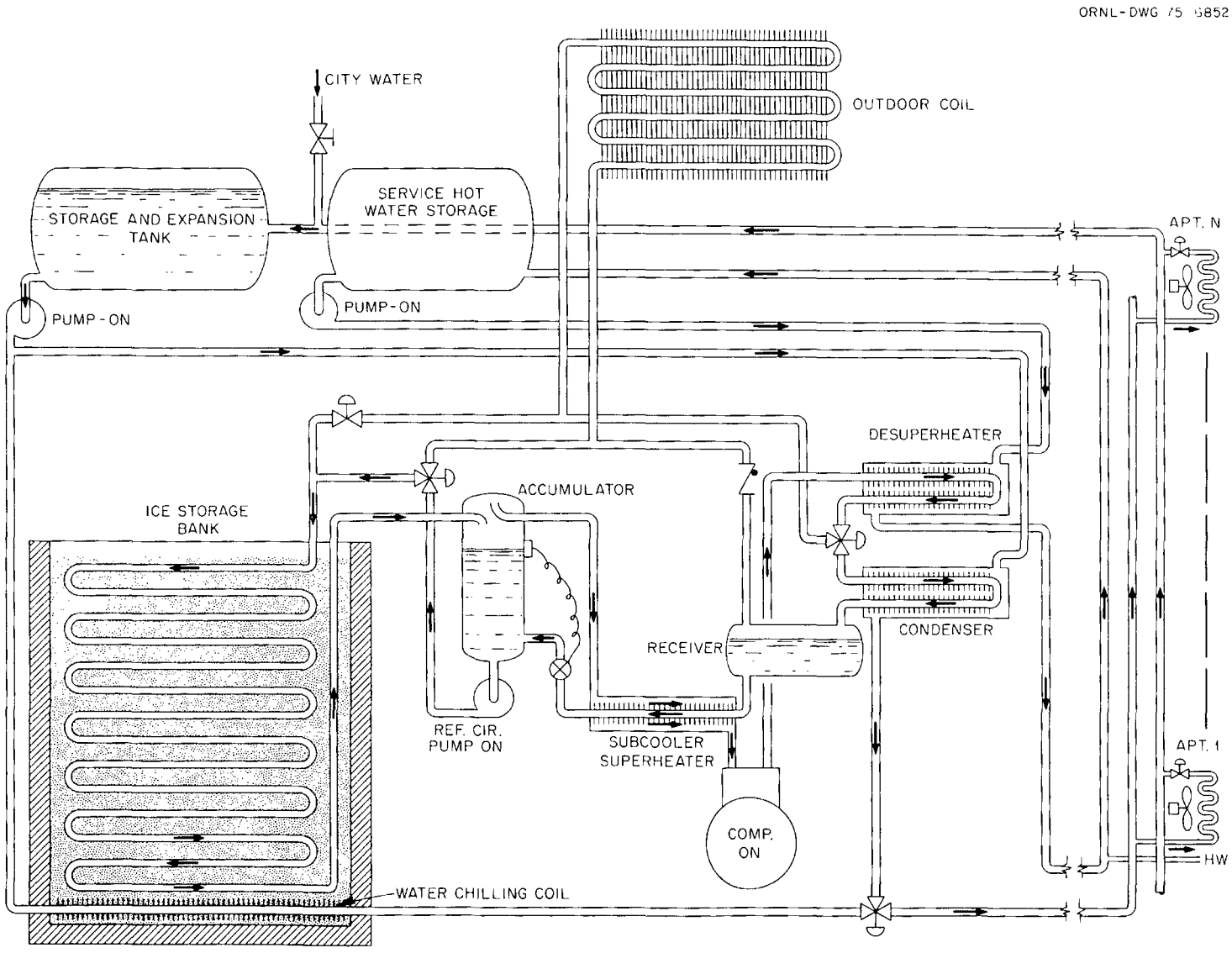

Fig. 4. Schematic diagram of the ACES central system as applied to apartment houses (heating mode).

REFERENCES FOR SECTION 2

1. U.S. Department of Housing and Urban Development, *Minimum Property Standards for One- and Two-Family Dwellings, Vol. 1*, Washington, D.C., 1973.

3. FEASIBILITY OF ALTERNATIVE ACES APPLICATIONS

From a technical standpoint, the construction and operation (with use of commercially available materials and equipment) of a heating and cooling system similar to the one depicted in Fig. 4 are clearly possible. Furthermore, such a system would almost certainly yield substantial energy savings over conventional space-conditioning systems now in use. The crucial question remaining, then, is whether and under what conditions an ACES installation can compete economically with conventional systems. In this section, a partial answer to this question is sought by examining the estimated installation and operating costs for an ACES supplying a modern apartment complex. The calculated costs for ACES are annualized and compared with similar cost estimates for alternative heating and cooling systems. In all cases, the heating and cooling requirements are based on actual data for the monthly energy consumption by the apartment complex in 1973. Using these cost calculations, the break-even fuel price is determined, beyond which the ACES is more economical than are the alternative systems considered.

This section also presents preliminary design considerations for other possible applications of the ACES concept — for nursing homes, for military bases, and for single-family residences.

3.1 Economic Assessment of the ACES for a Garden Apartment Complex

A detailed investigation was made of the economic feasibility of installing an ACES in an existing group of garden apartments located in Montgomery Village near Washington, D.C. Data describing the construction and insulation specifications of the apartment buildings and the actual energy consumption by the group of 406 apartments for the period from May 1, 1973, to April 30, 1974, were made available by Kettler Brothers, Inc. (owner). The energy consumption and total cost of three types of conventional space-heating and -cooling and hot-water systems were estimated and compared with those of ACES.

The study shows that, in 1975 dollars, the capital investment required for an ACES with a six-apartment basement storage exceeds the investment

cost for a conventional system (resistance space heating, electric air conditioning, and electric hot-water heating) by about $2290. However, if the prevailing electric rates are greater than 3.1¢/kWhr, the value of the energy savings achieved by the ACES will be sufficient to pay off the additional capital investment during the lifetime of the installation. In fact, if the projected marginal cost of electricity is used to evaluate the dollar value of the ACES energy savings, the annual cost of an ACES with a six-apartment basement storage is found to be $830 per apartment less than for an all-electric conventional system. On this basis, the annual rate of return to the nation for the incremental ACES investment amounts to 36%. At this rate, the incremental investment costs would be paid off in fewer than three years.

The salient findings of the ACES feasibility study, with application to an apartment building complex, are described in the following section.

3.1.1 Description of the Mills Choice Apartments

The 406-unit garden apartment development used in the analysis is Mills Choice Apartments, located in Montgomery Village, Gaithersburg, Maryland. Each apartment building is of modern construction, contains six apartments, and is three stories high. The side walls of the building contain 3 in. of fiberglass insulation and the third-story ceiling is provided with 6 in. of insulation. Except for draperies, the window areas are uninsulated, having neither storm sashes nor double glazing. The rectangular (52 x 44 ft) buildings rest on concrete slabs and are separated from one another by an unheated corridor. A central boiler that burns natural gas supplies heat for domestic hot water, for hot-water space heating, and for absorption water chillers.

3.1.2 Actual energy consumption by a Mills Choice apartment for space heating, for space cooling, and for domestic hot-water heating

According to Kettler Brothers, the developers of the Mills Choice Apartments, the calculated design day loads of a single apartment are 32,269 Btu/hr for heating and 27,556 Btu/hr for cooling. The actual fuel

consumption for space heating and cooling and for providing domestic hot water for the apartment complex as a whole was obtained for the period from April 1973 to April 1974. During this period, about 21,000 gal of oil was burned as auxiliary fuel during interruptions of natural-gas service. The heat energy from the oil was added to the primary energy input from natural gas and distributed to smooth the overall energy input curve and to make it correspond more closely with the degree-day curve for the Washington, D.C. area. The adjusted gross monthly consumption of energy for heating, for cooling, and for providing domestic hot water was then prorated to a single apartment.

Allocation of the gross monthly energy consumption per apartment among the three end uses — space heating, space cooling, and domestic hot-water production — required an independent estimate of energy use for providing hot water. This estimate was made on the basis of an assumed average occupancy rate of 3.5 persons per apartment. The results are shown in Table 2.

Table 2. Estimated energy use for providing hot water

Month	Water inlet temperature T_I (°F)	Hot-water consumption G (gpd/apt)	Net energy E_N (kWhr)	Gross energy E_G (kWhr)
Jan.	55	67	337.0	601.8
Feb.	55	67	337.0	601.8
March	55	67	337.0	601.8
Apr.	60	67	312.4	557.9
May	60	67	312.4	557.9
June	65	77	328.2	586.1
July	65	77	328.2	586.1
Aug.	65	77	328.2	586.1
Sept.	60	67	312.4	557.9
Oct.	60	67	312.4	557.9
Nov.	60	67	312.4	557.9
Dec.	55	67	337.0	601.8

The net energy delivered to a single apartment by the domestic water-heating system consists of the heat required to raise the temperature of the stated monthly quantity of inlet water to 120°F plus standby heat losses from the hot-water storage tank located in the apartment. The amount of heat required for this purpose, for the Mills Choice Apartments, is shown as E_N in Table 2. Assuming a 25-gal capacity hot-water tank, with 20 ft^2 of surface insulated with 3 in. of fiberglass, the standby heat losses are

$$(20\ ft^2)(0.083\ Btu\ hr^{-1}\ ft^{-2}\ °F^{-1})(120°F - 70°F)(720\ hr/month) = 60{,}000\ Btu/month\ per\ apartment\ .$$

If G gallons of inlet water are heated daily, the monthly delivered energy amounts to

$$E_N = [(30 \times G\ gal/month)(120 - T_I)\ (231/1728\ ft^3/gal)(62.4\ lb/ft^3) + 60{,}000] \div 3412\ Btu/kWhr\ .$$

Assuming a boiler efficiency of 0.70 and piping losses of 20%, the gross energy input required to deliver this quantity of heat is $E_N/0.56$.

Table 3 shows the total monthly energy consumption, allocated according to end use, of a Mills Choice apartment. The net delivered energy is estimated by assuming a boiler efficiency of 0.70 and piping losses of 20 and 10%, respectively, in the transmission of heated water for domestic hot water and for space heating. The COP of the absorption chiller for space cooling is taken to be 0.60. Based on these assumptions, the delivery efficiencies are 56% for domestic hot water, 63% for space heating, and 37.8% for space air conditioning. Using these efficiencies, the overall efficiency of the presently installed system for providing domestic hot water and space conditioning to a Mills Choice apartment is estimated to be (3894.6 + 5759.7 + 5882.1)/31657.9, or 49.1%.

Table 3. Gross energy consumption by a Mills Choice apartment and supplied loads for domestic water heating, space heating, and space cooling (kWhr)

Month	Gross energy consumption (kWhr/apt)	Gross energy consumption by end use			Net energy load by end use		
		Hot water	Space heating	Space cooling	Hot water	Space heating	Space cooling
Jan.	2582.1	601.8	1980.3	0	337.0	1247.6	0
Feb.	2271.4	601.8	1669.6	0	337.0	1051.9	0
March	1694.0	601.8	1092.2	0	337.0	688.1	0
Apr.	1087.3	557.9	529.4	0	312.4	333.5	0
May	1550.4	557.9	182.8	809.7	312.4	115.2	306.1
June	3880.4	586.1	0	3294.3	328.2	0	1245.3
July	4018.2	586.1	0	3432.1	328.2	0	1297.3
Aug.	4680.5	586.1	0	4094.4	328.2	0	1547.7
Sept.	3780.8	557.9	0	3222.9	312.4	0	1218.3
Oct.	1972.5	557.9	707.3	707.3	312.4	445.6	267.4
Nov.	1758.5	557.9	1200.6	0	312.4	756.4	0
Dec.	2381.8	601.8	1780.0	0	337.0	1121.4	0
Total	31657.9	6955.0	9142.2	15560.7	3894.6	5759.7	5882.1

3.1.3 Estimated energy consumption by ACES

The ACES installation being analyzed consists essentially of a refrigeration compressor operating as a unidirectional heat pump, an air-cooled condenser for space heating, a water-cooled condenser for domestic water heating, a chilled-water coil for air conditioning, a water-heated evaporator, air- and water-circulation systems, and an ice bin. The COP of the heat pump, based on manufacturer's data for a high-efficiency compressor, is taken to be 3.9. The ice bin is located in the basement of each apartment building and is large enough to serve as a common thermal-storage unit for all six apartments in the building. As will be discussed, the required size of the ice bin depends on the balance between the annual heating and cooling loads on the building and, therefore, varies with the climate of the specific site being considered.

ACES energy balance. An estimate of the annual energy consumption by the ACES in supplying the actual heating and cooling loads of a Mills Choice apartment during the period from April 1973 to April 1974 is listed in Table 4. A running account is provided of thermal-energy withdrawals from the ice bin and of thermal-energy deposits into it. Table 4 shows that the space-cooling requirement for an apartment during the month of September can be only partially satisfied by chilled-water cooling. Additional cooling, in the amount 1218.3 - 698.1 kWhr, or 520.2 kWhr, must be provided by supplemental operation of the compressor. The required electrical input energy to the compressor for this purpose amounts to 179.4 kWhr and results in the rejection of 699.6 kWhr of waste heat; the waste heat can be discharged to the atmosphere. Figure 5 displays the energy balance for a single apartment.

The total electrical energy input to the ACES, for meeting the combined hot-water, space-heating, and space-cooling loads of an apartment, consists of the energy required for transferring heat to and from the storage bin plus a small amount of auxiliary energy required for circulating air and water. The solar energy transferred to and from the bin is free and entails no charge. Thus, the total energy input to the ACES (in kWhr) is:

Table 4. Estimated energy consumption by ACES for Mills Choice Apartments (kWhr/apartment)

Month	Actual energy load			Electrical input to compressor	Energy transfer to ice-storage bin			Net heat added to storage bin	Total heat in storage bin	Electrical input to circulators 1 and 2
	Hot water	Space heating	Space cooling		Heating[a]	Cooling	Leakage			
Jan.	337.0	1247.6	0	406.3	-1178.3	0	172.9	-1005.4	-2747.1	39.0
Feb.	337.0	1051.9	0	356.1	-1032.8	0	172.9	-859.9	-3607.0	34.3
March	337.0	688.1	0	262.8	-762.3	0	172.9	-589.4	-4196.4	17.7
Apr.	312.4	333.5	0	165.6	-480.3	0	172.9	-307.4	-4503.8	15.4
May	312.4	115.2	306.1	109.6	-318.0	306.1	172.9	+161.0	-4342.8	22.4
June	328.2	0	1245.3	84.2	-244.0	1245.3	172.9	+1174.2	-3168.6	33.2
July	328.2	0	1297.3	84.2	-244.0	1297.3	172.9	+1226.2	-1942.5	34.2
Aug.	328.2	0	1547.7	84.2	-244.0	1547.7	172.9	+1476.6	-465.8	39.2
Sept.	312.4	0	1218.3	80.1	-232.3	698.1	0	+465.8	0	41.2
Oct.	312.4	445.6	267.4	194.4	-563.6	267.4	87.9	-208.3	-208.3	25.7
Nov.	312.4	756.4	0	274.1	-794.7	0	172.9	-621.8	-830.1	26.4
Dec.	337.0	1121.4	0	374.0	-1084.5	0	172.9	-911.6	-1741.7	36.0
Total	3894.6	5759.7	5882.1	2475.6	-7178.8	5361.9	1816.9	0		364.7

[a]Includes energy for space heating and domestic water heating.

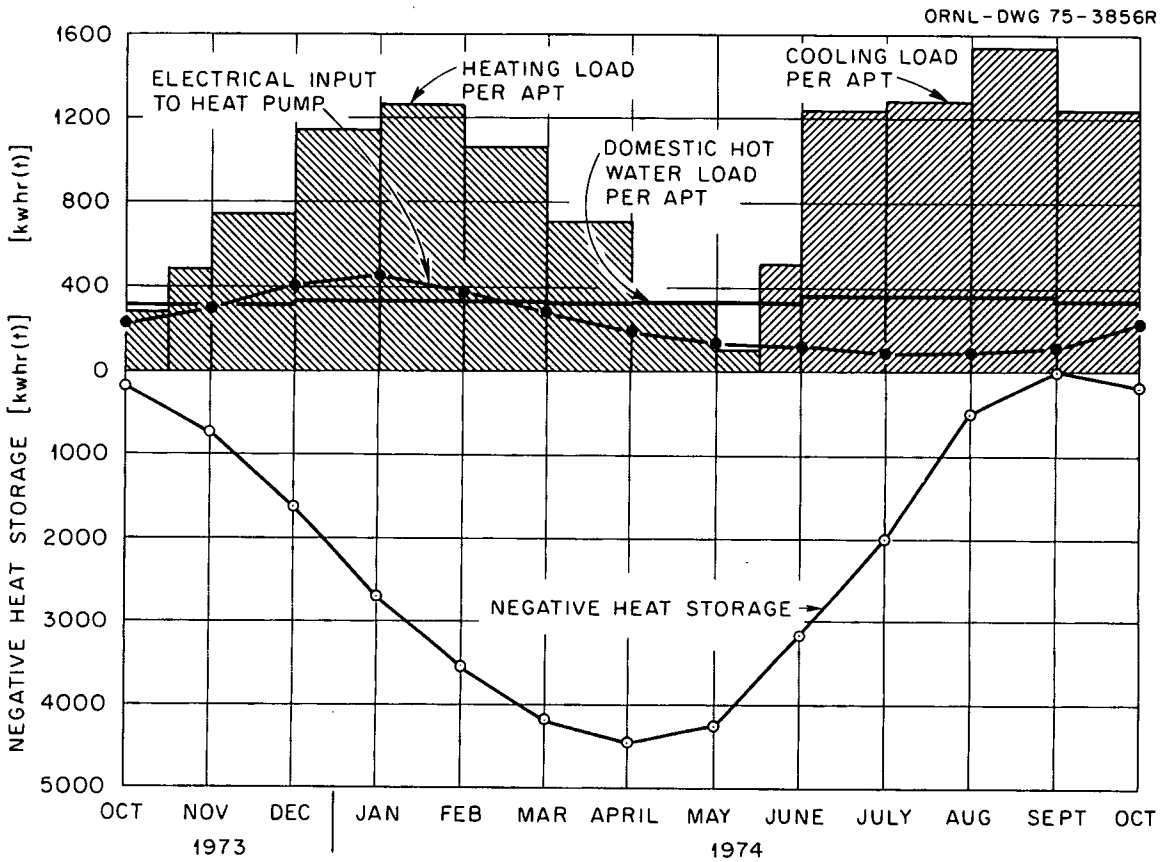

Fig. 5. Annual cycle energy-balance study (based on actual energy use of a 406-apartment complex in the Washington, D.C., area from April 1973 to April 1974).

Compressor input energy (space and water heating)	=	2475.6
Compressor input energy (cooling mode II)	=	179.4
Circulation system input energy	=	364.7
Total electrical energy input to the ACES		3019.7

From Table 4, the sum of the actual energy loads for the three end uses considered is 15,536.4 kWhr/year per apartment. Thus, the annual COP for the ACES installation is 15,536.4/3019.7, or 5.15.

Ice-bin capacity. Table 4 shows that the maximum buildup of ice in the storage bin occurs in April, when the cumulative thermal storage reaches

4503.8 kWhr for a single apartment. An ice bin large enough to accommodate the needs of all six apartments in a building would, therefore, require a total thermal-storage capacity of 27,023 kWhr. Because the latent heat of fusion that must be extracted from water at 32°F to form ice at the same temperature is (57.2 lb/ft^3)(144 Btu/lb)/3412 Btu/kWhr, or 2.418 kWhr/ft^3 of ice, the minimum volume of an ice bin serving six apartments is 27,023 kWhr/2.418 kWhr/ft^3, or 11,176 ft^3. The basement area of a Mills Choice apartment building is 2226 ft^2. Thus, an ice bin with a depth slightly greater than 10 ft, located under one-half of the building, would suffice for the ACES. In actual practice, however, additional space must be provided for maintenance accessibility and for an ice reserve to meet annual variations in climate. In this report's estimate of bin costs, 20% additional bin volume has been allowed for this purpose.

3.1.4 Estimated energy consumption by an all-electric conventional heating and cooling system

For purposes of comparison, the energy consumption by an all-electric conventional heating and cooling system for a Mills Choice apartment is estimated. The system analyzed consists of a 14.4-kW electric furnace in each apartment for space heating, an air conditioner having an energy efficiency ratio of 6.5 Btu/Whr, and a 42-gal electric hot-water heater with about 40 ft^2 of insulated outside surface. Although the standby heat losses for a tank of this size would be higher than for the ACES hot-water tank considered earlier, no charge is made in the analysis for the additional heat loss. Rather, it is assumed that the hot-water load is the same for both the ACES and the all-electric conventional system.

Table 5 shows the estimated energy consumption by the conventional system in supplying the actual heating and cooling loads of a Mills Choice apartment. Heat-transit losses are taken to be zero because both the electric furnace and the electric water heater are located within an apartment. The energy input to the air conditioner for each kilowatt-hour of cooling load is 3412/6500 kWhr, or 0.525 kWhr of electricity. The annual COP of the conventional system is 15,536.4 kWhr load/12,742 kWhr

Table 5. Estimated annual energy consumption by an all-electric conventional heating and cooling system for a Mills Choice apartment

End use	Actual energy load (kWhr/year)	Estimated energy input to all-electric system (kWhr/year)
Domestic hot water	3,894.6	3,894.6
Space heating	5,759.7	5,759.7
Space cooling	5,882.1	3,087.7
Total	15,536.4	12,742.0

input, or 1.22. Strikingly, the annual energy input required by the conventional system for domestic water heating alone exceeds the total input to the ACES for all three end uses; thus, the energy savings attainable by the ACES are substantial. In the next section, the installation and operating costs of the two heating and cooling systems will be compared to determine whether, and under what conditions, the ACES can also be economically competitive.

3.1.5 Economic comparison of the ACES with conventional all-electric system

Capital costs. The capital costs and installation costs, in constant 1975 dollars, are compared for an ACES and for an all-electric conventional heating and cooling system for the Mills Choice Apartments. Table 6 lists components common to the two systems as well as equipment for the ACES involving incremental costs over those of a conventional system. The cost of the ACES ice bin is considered separately later and thus is not included in the tabulation. The additional capital cost for the ACES components, exclusive of the ice bin, is estimated to be $439. To provide a conservative estimate, this value is increased by 50%, to $658.50.

Installation costs arising from connections to water, to drains, and to electricity are comparable for the two systems, except for the methanol/water piping for the ACES. The estimated cost of installing the PVC plastic pipe system to the ACES ice-bin coils is $150 per apartment, and the cost of 100 ft of 1-1/2-in.-diam plastic tubing needed for this purpose is $16.50.

Because of the lower demand for electricity by the ACES, $50 is deducted from the total cost for electric service and wiring. The overall incremental cost for ACES, exclusive of expenditures for the ice-storage bin, is, for mortgage purposes:

Incremental equipment costs	$658.50
Incremental installation costs	150.00
Plastic pipe for bin hookup	16.50
ACES water inventory, 15,000 gal	15.00
Credit for reduced electric service	-50.00
Total	$790.00

Cost of ice-storage bin. Cost estimates for the installation of alternative designs of ACES water storage reservoirs were prepared under contract by Crouch and Adams, Inc., an architectural/engineering consulting firm located in Oak Ridge, Tennessee. The installation costs were found to range from 49¢ to 68¢ per cubic foot of gross volume, depending on the particular design. The least expensive storage design considered was a vinyl-lined pond with a floating insulated lid. In cases where space for a pond is unavailable, or where the presence of rock precludes excavation, a galvanized steel tank, above ground or partially buried, can be used. Such outside storage reservoirs are especially useful for retrofitting the ACES into existing buildings.

For application of the ACES to the Mills Choice Apartments, a hypothetical ice bin is considered, sized to serve six individual apartments and located in the basement of the apartment building. The storage bin occupies one-half of the building's basement area and is slightly greater than 10 ft in depth. The walls and bottom are insulated with 2-in. urethane board, and the top is insulated with 6 in. of insulation attached to the lower surface of the first-story floor. Heat leakage into the bin is estimated to be about 600,000 Btu/month per apartment, or about 173 kWhr. The bin is lined with 0.020-in. vinyl sheeting to provide waterproofing. Crouch and Adams, Inc. estimated the unit cost of installing such an ice-storage bin to be about 67¢/ft.^{3}. The total cost of an ice bin of the required

Table 6. Comparison of capital costs (in 1975 dollars) of an ACES and of an all-electric conventional heating and cooling system for a Mills Choice apartment

Component	Conventional system[a]	ACES
Duct system	*b*	*b*
Indoor blower	*b*	*b*
Room thermostat	*b*	*b*
Resistance coils and relay	50	0
Indoor condenser coil	0	35
Indoor evaporator coil	40	0
Indoor water coil	0	30
Outdoor condenser coil	40	0
Compressor	85	100
Electric water heater (40 gal)	70	0
Glass-lined water tank (30 gal)	0	30
Precharge refrigerant lines	25	0
Cabinet sheet metal (incremental)	0	15
Motorized valves (4)	0	60
Circulator pumps (2)	0	86
Damper and motor	0	30
Control panel (incremental)	0	10
Chiller coil and heat exchanger	0	75
Expansion device	5	9
Coils for ice bin	0	229
Heat exchanger for water heating	0	45
Total	315	754

[a]Electric furnace, central air conditioner, and electric water heater.
[b]Equivalent capital costs for the two systems.

capacity is (11,176 ft^3)(1.20)(\$0.67/ft^3)/six apartments, or \$1500 per apartment.

Owning and operating costs. The total annual cost of owning and operating a heating and cooling system for a building is comprised of charges for fuel, for maintenance, and for initial capital investment. In the comparison of the annualized investment costs for the ACES and for the conventional HVAC system investigated here, the owner is assumed to make a down payment of 20% and to finance the remainder by borrowed capital. Values of the economic parameters used to compute levelized annual charges for the two heating and cooling systems are listed in Table 7.

Table 7. Economic conditions assumed for computing annual payments for initial investment capital

Personal discount rate, I_p	0.06
Mortgage interest rate, I_m	0.09
Initial downpayment, 1 - f	0.20
Life of mortgage in years, L	20
Personal incremental income tax rate, t	0.25
Local property tax rate, R_3	0.03
Property insurance rate, R_4	0.004

If the net annual cost of an investment of \$1 is denoted by R_T, then

$$R_T = R_1 + R_2 + R_3 + R_4 - t(R_3 + R_5) \quad , \tag{1}$$

where

R_1 = the required annual mortgage payment on the borrowed capital, f,
R_2 = the levelized, equal annual payment on the investment equity, 1 - f,
R_3 = the local property tax rate,
R_4 = the property insurance rate,
t = the incremental income tax rate of the investor, and

R_5 = the levelized annual series of payments over the life of the mortgage, discounted at a rate of I_p, which is equivalent to the total variable interest payments on the mortgage.

Under the conditions stipulated above, it can be shown that

$$R_1 = \frac{f(I_m)}{1 - (1 + I_m)^{-L}} , \tag{2}$$

$$R_2 = \frac{(1 - f)I_p}{1 - (1 + I_p)^{-L}} , \tag{3}$$

and

$$R_5 = R_1 \left[1 - \frac{I_p}{(1 + I_p)^L - 1} \times \frac{1 - \left(\frac{1 + I_p}{1 + I_m}\right)^L}{(I_m - I_p)} \right] . \tag{4}$$

When the values of the economic parameters listed in Table 7 are substituted into these expressions, the net total annual cost of an incremental investment dollar is shown to be:

Mortgage (9% interest)	0.0876
Equity	0.0174
Property tax	0.0300
Insurance	0.0040
Federal tax rebate	-0.0209
Fixed charge rate	0.1181

System operating costs include expenditures for fuel and for equipment maintenance. The annual expenditures for maintenance are estimated to be a fixed fraction of the initial investment. This fixed fraction is assumed to be 0.05 (per year) for conventional air-to-air heat pumps and electric air conditioners, 0.04 for electric furnaces, and 0.02 for electric hot-

water heaters. Based on these component costs, the total annual maintenance cost of the all-electric conventional system is computed to be 4.34% of the initial investment. The ACES mechanical equipment is assumed to have a reliability similar to that of the conventional system. The ice-storage bin, however, is assumed to require no annual maintenance because it contains no moving parts and because the probability of leaks is believed to be small. Table 8 summarizes the annual costs of the two systems investigated for application to the Mills Choice Apartments. The ACES provides considerable savings in energy over the conventional system and, for the assumed electric rate, at a lower total annual cost.

3.2 ACES for a Single-Family Residence

A preliminary analysis of the energy requirements of alternative heating and cooling systems for a single-family residence has been performed to determine the potential energy savings attainable by ACES in low-density housing applications. The house considered is a two-level frame structure having a partial basement and about 2000 ft^2 of living space distributed among three bedrooms, two bathrooms, a kitchen, a utility room, and an entry hall. The building shell is assumed to be insulated in accordance with HUD minimum property standards,[1] the shell having an overall heat transfer coefficient, U (Btu hr^{-1} ft^{-2} $°F^{-1}$), of 0.08 for the outside walls, 0.05 for the ceiling, 0.10 for the wood floor above a crawl space, and 1.12 for the windows.

The annual loads of this building for heating, for cooling, and for providing domestic hot water were computed for climatic conditions typical of Knoxville, Tennessee. The electrical energy input required to meet these loads was computed for three alternative heating and cooling systems: a conventional system employing an air conditioner for space cooling, and electric resistance heating for space heating and for providing hot water; a conventional system employing a heat pump for heating and cooling and an electric water heater for providing domestic hot water; and the ACES. The results of the calculations, shown in Table 9, indicate that the total

Table 8. Cost and energy summary of ACES vs all-electric conventional system for Mills Choice Apartments

Item	Conventional system	ACES
Equipment performance		
Heating COP		3.9
Annual COP		5.2
Cooling performance, Btu/W	6.5	
Capital costs, installed, dollars/apartment		
ACES mechanical equipment[a]		1,880
ACES ice-storage bin		1,500
Electric furnace, 14.4 kW	420	
Electric air conditioner, 30,000 Btuh	570	
Electric water heater, 42 gal	100	
Total	1,090	3,380
Annual energy consumption, kWhr		
Space cooling	3,087.7	544.1
Space heating	5,759.7	1,477.0
Domestic water heating	3,894.6	988.6
Total	12,749.0	3,019.7
Annual costs, dollars/apartment		
Fixed charges at 11.8%	128.62	398.84
Maintenance at 4.33%	47.30	81.58
Electricity at 4¢/kWhr[b]	509.96	120.79
Total	685.88	601.21

[a]The installed cost of the ACES mechanical equipment is equal to that of a conventional system — $1090 — plus an incremental cost of $790/apartment, as estimated previously.

[b]An electricity rate of 4¢/kWhr is typical of the Eastern seaboard. For a variable rate of r dollars/kWhr, the annual costs of the conventional system, C_c, and of the ACES, C_a, given by the expressions: $C_c = 175.92 + r(12,749)$ and $C_a = 480.42 + r(3019.7)$. Thus, the cost of electricity at the crossover point is 3.1¢/kWhr. If local electricity rates are higher than 3.1¢/kWhr, the ACES has lower annual costs than the conventional system.

Table 9. Comparative energy consumption (kWhr/yr) of the ACES and of conventional heating and cooling systems for a single-family house

End use	Annual load	Conventional all-electric system[a]	All-electric system with heat pump[b]	Integral ACES[c]
Heating	12,837	12,837	6,418	
Cooling	6,652	3,243	3,243	
Hot water	4,750	4,750	4,750	
Total	24,239	20,830	14,411	7,522

[a] An air conditioner for space cooling, and electric resistance heating for space heating and for domestic hot-water production.

[b] A heat pump (COP = 2.00) for space heating and cooling, and electric resistance heating for domestic hot-water production.

[c] An integral ACES for space heating and cooling and for domestic hot-water production. The ice-storage bin has a capacity of 3500 ft^3, sufficient to meet the entire summer cooling load of the building. The maximum heating load of the building is calculated to be 9.32 kW, or 31,800 Btu/hr.

annual energy requirement of ACES is about one-third that of the conventional system without a heat pump, and about one-half that of the conventional system with a heat pump. Because of the substantial energy savings attainable by the ACES, design optimization studies are planned to continue and to lead eventually to the construction and operation of a full-scale residential building in the Knoxville area.

REFERENCES FOR SECTION 3

1. U.S. Department of Housing and Urban Development, *Minimum Property Standards, 1973 Edition, One- and Two-Family Dwellings*, Washington, D.C., 1973. See also revisions 1 and 2, July 1974 and January 1975.

4. COMPUTER PROGRAMS FOR ACES DESIGN AND ANALYSIS

4.1 Heat-Transfer Analysis

4.1.1 Heating and cooling loads

In ACES design optimization, to be able to estimate accurately the energy requirements of the heating and cooling system of a building having a specified shell design is essential. This estimation requires a sophisticated calculation of heat losses and gains of the building's enclosed space, a determination of the heating and cooling loads imposed on the ACES, and an assessment of the total energy input to all of the system components required to satisfy that load. Furthermore, the calculation of heating and cooling loads for the purpose of estimating energy consumption must reflect the actual weather conditions of the building's locale.

Several advanced computer programs employing rigorous calculational procedures for determining these loads have been developed or are being developed.[1,2] These comprehensive computer programs eventually are expected to be used extensively in ACES design optimization. In early ACES design studies, however, a computer program for calculating building loads, which was developed at the Oak Ridge National Laboratory (ORNL) for the HUD-MIUS Project, has been employed. This computer program is developed according to the principles set forth in the *ASHRAE Handbook of Fundamentals*[3] and is believed to supply reliable, accurate results. Unfortunately, the program is not yet sufficiently flexible for general ACES design application.

The ORNL building-loads program described above is used to generate hourly heating or cooling load requirements for a building of a specific shell design and in a specific climatic zone. The heating and cooling loads are calculated using hourly weather tape data on dry-bulb temperatures, on wet-bulb temperatures, and on cloud cover. The heat balance of the building is calculated on an hourly basis, yielding the loads on the ACES for space heating and cooling and for supplying domestic hot water. These data, together with weather parameters, are stored on tape and serve as input to the ACES performance-simulation program. Additional work is planned

to make the building-loads program flexible enough to accept any arbitrary building design and orientation or, alternatively, to adapt one of the existing comprehensive load programs described earlier to ACES applications.

4.1.2 Thermal analysis of ice-storage bin

A standard computer program for calculating heat transfer was used to calculate heat leakages into the ice bin. The program HETRARZ employs RZ geometry and calculates steady-state temperatures, taking into account heat generation, conduction, and radiation. The thermal conductivity may be taken to be temperature-dependent. The program was used to calculate the equilibrium-temperature distribution established in the earth surrounding a buried cylindrical tank containing water at 32°F. Any other readily available standard heat-transfer program could be used to establish bin-insulation requirements.

4.2 ACES Performance Simulation

To assist in ACES design and economic optimization studies, a computer program was developed to simulate the performance of an ACES-equipped building over a period of several years. The program uses the results of the previously described load program to calculate a thermal account for the building on an hour-by-hour basis. This thermal account is accumulated, on a daily and annual basis, to provide the following information relating to ACES performance:

1. building heating loads
2. cooling and hot-water loads
3. energy output of the solar panel
4. electric energy input to the heat pump
5. electric energy input to the pumps and blowers
6. ice formed or melted during the day
7. cumulative total cooling load
8. cumulative total heating load

9. cumulative hot-water load
10. total electric energy input to the heat pump (kWhr)
11. total electric energy input to the pump and fan (kWhr)
12. ice inventory in the bin and the reservoir temperature and
13. daily and annual COP of the system

The computer program also calculates any additional heating required by the building to determine whether the heat pump selected for ACES is adequately sized. At the end of each year, the computer program calculates the seasonal COP of the system, the minimum tank size, the maximum heating load, and the maximum cooling load. The program output also provides tables of hourly electrical consumption and peak hourly electrical consumption for each month of the year. This information is of particular interest to electric utility companies in evaluating the effect of the ACES on their load pattern.

REFERENCES FOR SECTION 4

1. T. Kusuda, *NBSLD, Computer Program for Heating and Cooling Loads in Buildings*, NBSIR 74-574, National Bureau of Standards, Washington, D.C., November 1974.
2. University of Georgia, *NECAP, NASA's Energy Cost Analysis Program*, PGM LAR-11888, Athens, Ga.
3. "Heating Load and Air-Conditioning Cooling Load," *ASHRAE Handbook of Fundamentals*, 1972, pp. 375-445.

5. COMPONENTS DESIGN AND TESTING

5.1 Ice-Bin Structures

The basic requirements of an ACES ice-storage bin are that it be easily constructed from commercially available materials, relatively inexpensive, watertight, accessible for maintenance, and adequately insulated to prevent undesired melting of the stored ice. The structure should be large enough to provide a reserve capacity of ice for meeting anticipated variations in loads arising from year-to-year changes in climate. In general, the cost per unit volume of an ice-storage bin decreases as the size of the bin increases. Heat leakage into the bin (per unit volume) also decreases with increasing bin size because of the more favorable surface-to-volume ratio of large storage tanks. A number of alternative water-storage structures that have been developed in recent years for other applications are also suitable for use with the ACES. The construction cost of water-storage reservoirs of different designs that might be applicable to the ACES has been investigated by Crouch and Adams, Inc. under contract with Union Carbide Corporation Nuclear Division. The Crouch and Adams report[1] also discusses possible construction problems and maintenance costs.

5.1.1 Alternative ice-bin designs

Modular storage tanks. During the past eight years, a new type of watertight underground tank has been developed to store liquid manure wastes from dairy farms and from cattle feedlots. These tanks are located underground or beneath buildings and are capable of supporting live loads of 150 psf. Such a tank would be sufficiently strong to be used as a central ACES storage bin located, for example, beneath a city parking lot. The tanks are of modular construction, employing tongue-and-groove reinforced concrete panels 4 x 10 x 1/2 ft in size, and are marketed by Midwest Bunker Silo Company of Charlotte, Michigan.

The tanks are constructed by first making the excavation and then laying a floor with a 4-in.-deep, 7-in.-wide groove around its perimeter. The groove is provided to receive the ends of the prefabricated concrete panels. The panels are positioned with a crane and sealed with a mastic during assembly. The entire operation, illustrated in Fig. 6, proceeds quite rapidly and typically requires only about five days from the initial excavation to the final backfill. The installed cost of the fully insulated modular storage tank is estimated to range from 60¢ to 95¢ per cubic foot of capacity.

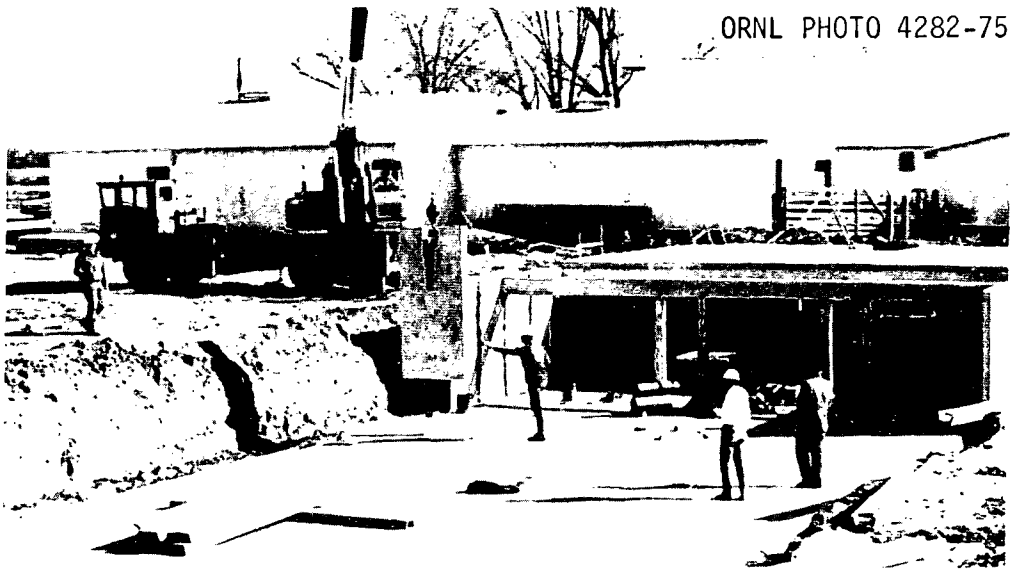

Fig. 6. Modular water tank under construction.

Vinyl-lined pond. The least expensive and most easily constructed ice-storage bin consists simply of a pond with a floating insulated lid. In the case of porous soils, the pond excavation could be lined with 20-mill plastic sheeting to reduce water seepage, although lining is probably not needed for clay soils. As shown in Fig. 7, a floating lid consisting of 2-in. urethane board faced with vinyl sheeting reduces heat leakage through the top. If desired, the floating lid can be covered

ORNL-DWG 75-6856

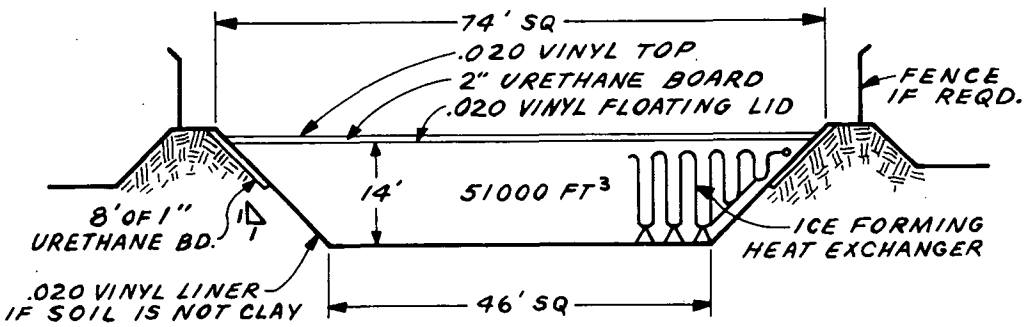

Fig.7. Vinyl-lined pond with floating insulated lid for use as the ACES ice bin.

by water to convert the ice-storage facility into an attractive landscape feature. The pond ice-storage option is suitable for rural applications of the ACES or in urban settings having sufficient available space. The cost of a pondtype ice bin for the ACES is estimated to range from about 30¢ to 50¢ per cubic foot of storage capacity, depending on the size of the bin.

Steel storage tank. A galvanized steel tank, located either above ground or partially buried, could conceivably be used in some situations to provide ice-storage capacity for ACES retrofit applications or in cases where the presence of rock precludes excavation for other types of storage. Figure 8 shows how a steel storage tank could be insulated to reduce heat leakage. The cost of installing and insulating this type of ice-storage capacity is currently being examined. Preliminary indications are that steel tanks can be competetive with alternative storage systems, providing that advantage is taken of low-cost units developed primarily for agricultural use.

Basement storage bin. For buildings of new construction, the best and least expensive method of providing ice-storage capacity for the ACES is probably the basement storage bin. The ice bin can be designed

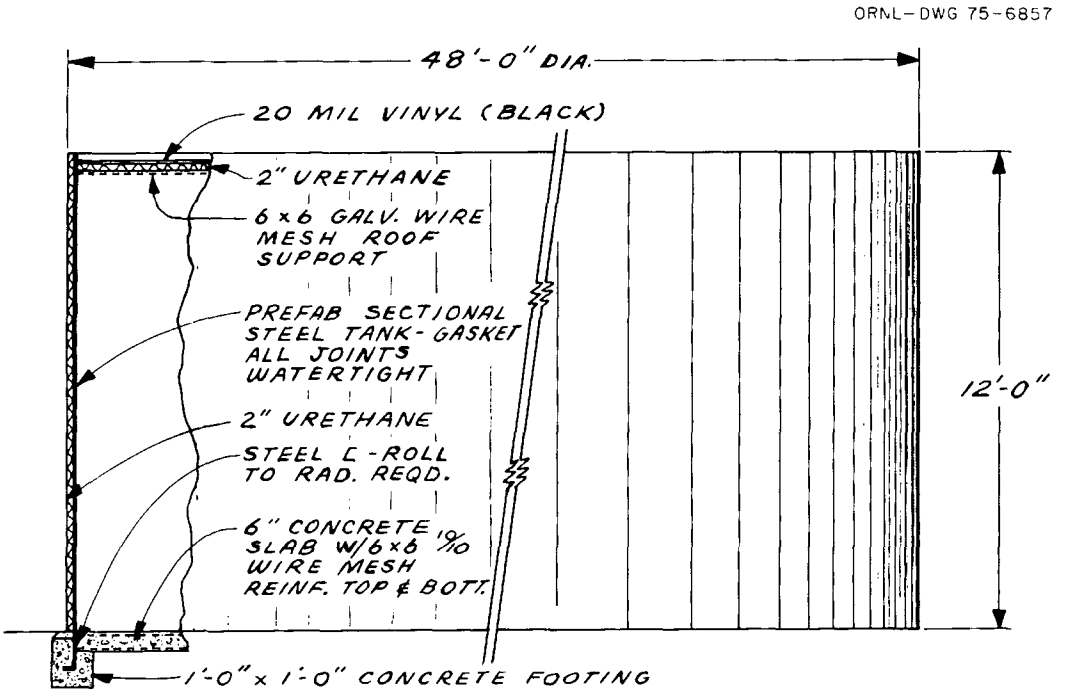

Fig. 8. The ACES ice bin constructed above grade from a galvanized steel insulated tank.

as an integral part of the building structure and constructed using excavation equipment, labor, and materials that normally are already on hand at the building site. Figure 9 shows one feasible design of an ice bin incorporated into the basement structure of a building. The cost of a basement storage bin of this type is estimated not to exceed $1 per cubic foot of storage capacity and could eventually be reduced to one-half this amount as more construction experience is acquired.

5.1.2 Ice-bin insulation requirements

Heat leakage into the bin from the outside environment must be minimized to preserve the ice accumulated during the heating season for later use in meeting the building's cooling load. The amount of heat leakage into the bin can be held to a low value by insulating the walls and top with 2 in. of urethane foam board faced with an inside reflective foil. At least 4 in. of air space should be provided on the top, between the surface of the

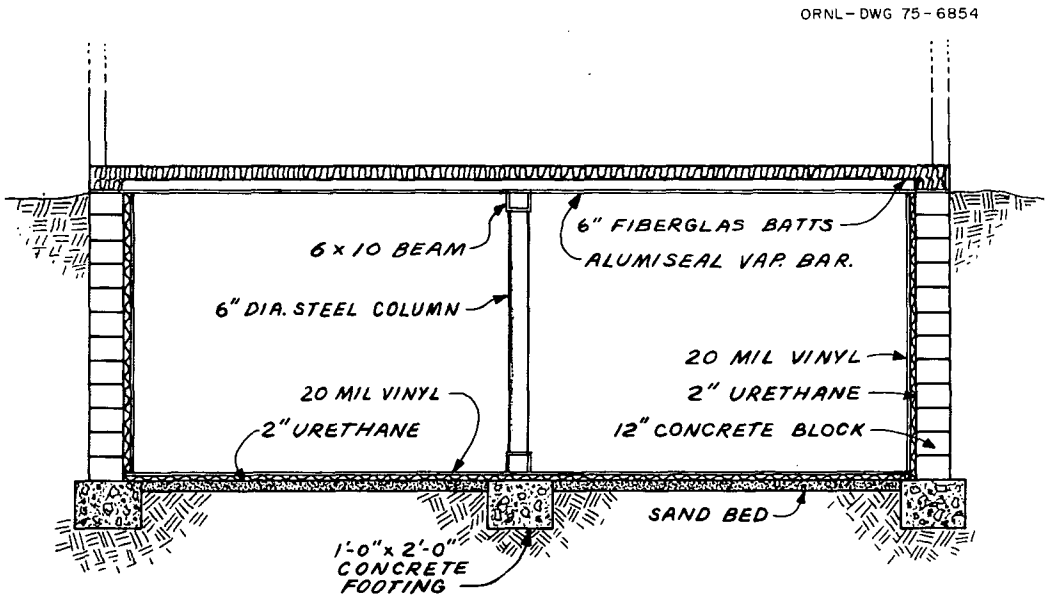

Fig. 9. The ACES ice bin incorporated into basement structure of building.

water and the roof of the bin. The effectiveness of this type of insulation was calculated for a hypothetical cylindrical ice bin 40 ft in diameter and 10 ft in depth.

The ice bin is assumed to be sunken to ground level in wet soil and to be located in a climatic region characterized by an average annual temperature of 55 to 59°F. The ground-surface temperature varies between 40 and 70°F, and the coefficient of thermal conductivity of the soil is taken to be 1.0 Btu-ft hr^{-1} ft^{-2} $°F^{-1}$. The temperature within the tank is assumed to remain constant at 32°F for the ice/water mixture. A computer program for calculating heat transfer in RZ geometry, HETRARZ, was used to determine the temperature distribution around the ice bin. Table 10 shows the results obtained in terms of the average monthly heat flux into the tank. The effect of tank size on heat in-leakage, expressed as percent per month of the thermal storage capacity of the tank, is shown in Fig. 10.

Table 10. Average monthly heat flux into ACES ice bin ($Btu\ hr^{-1}\ ft^{-2}$)[a]

Month	Top	Sides		Bottom	
	Insulated	Uninsulated	Insulated	Uninsulated	Insulated
	R22.7		R16.6		R16.6
June	1.63	2.52	1.37	1.48	1.02
July	1.63	3.35	1.71	1.66	1.11
Aug.	1.46	4.16	1.44	1.84	1.18
Sept.	1.16	4.76	2.0	1.47	1.19
Oct.	0.83	4.83	1.87	2.02	1.10
Nov.	0.54	4.76	1.58	1.97	1.08
Dec.	0.37	4.16	1.23	1.84	0.97
Jan.	0.37	3.35	0.89	1.66	0.88
Feb.	0.54	2.52	0.66	1.48	0.81
March	0.53	1.94	0.60	1.35	0.80
Apr.	1.17	1.72	0.73	1.30	0.83
May	1.46	1.94	1.03	1.35	0.91

[a]For buried tanks in wet soil in a climate where average annual temperature is between 55 and 59°F and where water in tank is maintained at 32°F.

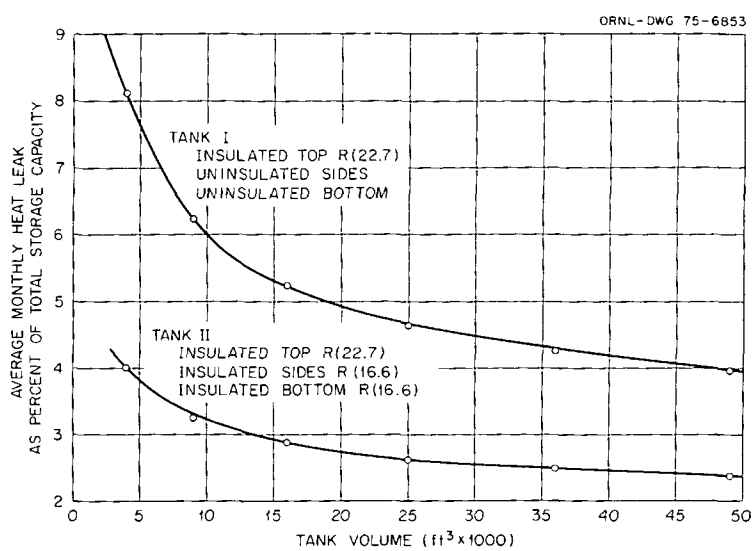

Fig. 10. Average monthly heat leak as percent of total Btu storage capacity vs tank volume (for square tanks with a depth of 10 ft buried in wet soil in a climate where average annual temperature is 55 to 59°F).

5.2 Ice-Freezing Coils

The most straightforward approach for providing thermal linkage between the ACES heat pump and the ACES heat-storage facility would be to recirculate liquid refrigerant from the accumulator directly through the heat-exchanger coils in the water-storage bin (Fig. 4). This method would allow the system to operate at a higher evaporator temperature than would be possible with an intermediate heat-exchange loop, producing an attendant improvement in COP. However, the method would require a large inventory of refrigerant and also would require proper design measures to ensure that lubricating oil is returned to the compressor. Careful design attention would also have to be given to the possibility of leakages arising in the heat-exchanger coils resulting in the loss of refrigerant. Joints in the heat-exchanger tubing would have to be located in an area accessible for inspection and service without the need for emptying the water-storage tank.

In view of the possible difficulties associated with the direct recirculation of refrigerant through the ice bin, a more conservative approach is to interpose an intermediate heat-exchange loop between the evaporator and the storage bin (Fig. 1). A methanol-and-water brine, chilled by the evaporator, is pumped to the storage bin where the brine flows through a heat exchanger consisting of extruded-aluminum finned tubing and is then returned to the evaporator. The heat-exchanger tubing in the ice bin is arranged in a serpentine configuration and is fully submerged. Heat flows from the water stored in the bin, through the wall of the heat-exchanger tube, to the chilled brine, resulting in the formation and buildup of ice on the outside surface of the heat-exchanger tubing. An analytical and experimental investigation has been conducted to determine the long-term performance of this heat-exchanger concept and to identify design requirements. Heat-transfer rates at different thicknesses of ice buildup were measured and compared with theoretical values, and the effect of alternate freezing and thawing of ice on the mechanical stability of the heat exchanger was studied.

5.2.1 Ice-coil performance tests

The rate of ice buildup on the outside surface of the extruded-aluminum tubes of the ice-bin heat exchanger was measured and compared with calculated values. Calculating the rate of ice formation is complicated because the thickness of the ice annulus surrounding the metal tube varies continuously as ice accumulates. This accumulation of ice reduces the rate at which heat flows from the water in the storage tank, through the ice annulus and the metal wall of the heat-exchanger tube, to the cold brine inside the tubing. Consider the case of a cylindrical metal tube of length L (ft) with an outside diameter D_T, which contains brine at a temperature T_B (°F). The metal tube is surrounded by a cylinder of ice having an outside diameter D_I and immersed in a tank of water at 32°F. It is desired to calculate the rate at which heat flows from the water to the brine for this case of constant ice thickness.

To a first approximation, the small temperature drop across the thin-walled metal tube can be neglected. In this case, the rate at which heat flows from the water to the brine, $\dot{Q}$ (Btu/hr), is given by the expression

$$\dot{Q} = 2\pi KL(32 - T_B)/\ln(D_I/D_T), \qquad (1)$$

where K is the coefficient of thermal conductivity of ice, 1.34 Btu-ft hr^{-1} ft^{-2} $°F^{-1}$. This relationship has been used successfully to correlate measured heat-flow rates corresponding to different thicknesses of the ice annulus. In making the correlation, shown in Fig. 11, it was necessary to compute an "effective diameter" of the finned heat-exchanger tubing, taking into account the efficiency of the fins.

Ice-freezing tests. An experimental test assembly was erected according to the schematic diagram and equipment specifications shown in Appendix A. Throughout the ice-freezing tests, periodic records were made of the discharge and suction pressures of the compressor, the temperatures of the brine and water at selected locations, and the weight of the accumulated ice. The weight of the ice formed on the aluminum tubes was recorded to

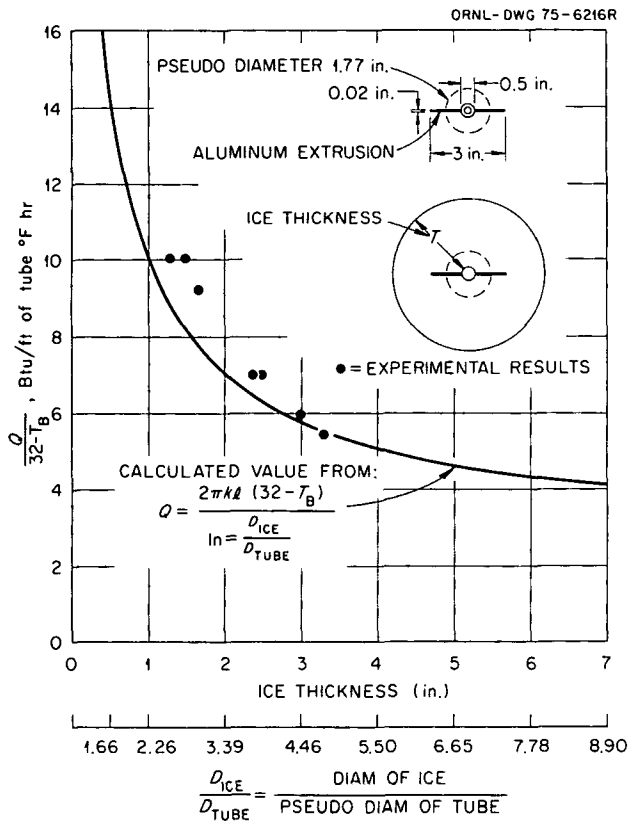

Fig. 11. Ice thickness vs heat flow per °FΔT in an ACES installation.

provide a measure of the rate of heat transfer from the water to the brine for different thicknesses of accumulated ice. The extruded-aluminum tube that was tested is 0.5 in. in diameter and is provided with 1.25- by 0.20-in. longitudinal fins spaced 180° apart on each side of the tube. The ice-freezing tests were continued until no further accumulation of ice could be achieved. Heat flow from the environment into the insulated tank ultimately limited the maximum diameter of the ice annulus to about 6.8 in.

The need for improved insulation of the test tank was also indicated by temperature stratification within the tank. During the tests, a concentration of 38°F water was observed at the bottom of the tank, undoubtedly

arising from inadequate insulation of the tank walls. This temperature concentration caused the ice cylinders that were formed to exhibit a definite taper with the smaller diameter being near the bottom of the tank. This uneven accumulation of ice, observed for ice cylinders less than about 4.5 in. in diameter would not occur in a well-insulated tank buried in the ground. To reduce temperature stratification in the tank, a small stream of air bubbles from a compressed air line was introduced at each end of the tank. Although this measure was successful, plans are to provide better tank insulation and to extend the tests to provide data at higher buildups of ice.

The observed heat-flow rate from the water to the brine was found to agree well with calculated values, as shown in Fig. 11. Furthermore, the heat-transfer rate achieved with the experimental heat-exchanger tubing described above is more than sufficient for ACES application in both the heating and cooling modes. Thus, the ice-freezing tests fully confirm the adequacy of the proposed ice-coil design with respect to its heat-transfer characteristics. Additional tests were performed to determine the mechanical stability of the ice-coil configuration and to identify design requirements.

Ice-coil stability tests. The extruded-aluminum coils of the ice-bin heat exchanger are subjected to certain physical forces during ACES operation which could conceivably impair the mechanical integrity of the coils. For example, when the ACES is operated in the heating mode, the buildup of ice on the coils exerts an upward buoyant force of about 5.1 lb/ft^3 of accumulated ice. Because this buoyant force is not great, it can be easily counteracted by installing the coils in a vertical serpentine configuration and by providing an arrangement in the ice-bin design to hold the coils submerged at all times. Of a potentially more serious nature, however, are the expansion forces exerted on the coils and on the walls of the water tank by the freezing of water.

This potential problem was recognized in early ACES design considerations and was dealt with by requiring that an automatic ice-bank control system be installed to prevent the water in the storage tank from freezing

solid. Even with such a control system, however, a small but finite possibility remains that repeated freezing and thawing of water in the storage tank over many seasons could result in damage to the ice coils. The ice coils are most vulnerable to damage or distortion at times when the ACES returns to the heating mode before the ice cylinder surrounding the tubing has been fully melted. As the water trapped between the ice cylinder and the brine-carrying tube refreezes, tube collapse could occur. To test this hypothesis, a series of freeze-thaw tests was conducted.

The tests were performed by melting out part of the ice cylinder during daytime operation of the ACES test assembly and refreezing the trapped water overnight. No damage or distortion of the heat-exchanger tubing or its supports was observed following ten freeze-thaw cycles. In every case, the trapped water froze solid and relieved the pressure by cracking the surrounding ice rather than by collapsing the heat-exchanger tube. Figure 12 shows the ballast coil and the radial cracks in the ice cylinder caused by the expansion forces of the trapped water as it froze. The results of the test demonstrated the adequacy of the proposed ice-coil design with respect to its mechanical stability under actual load conditions.

5.2.2 Cooling-mode operation of ice-bin heat exchanger

The essential energy-saving feature of the ACES is the use of ice accumulated in the storage bin during the winter heating season to provide summertime cooling for the building. The ACES concept envisions employing the same ice-bin heat exchanger (used to freeze the ice) to circulate chilled brine to areas of the building requiring air-conditioning service. At these areas the chilled brine is pumped through a cooling coil located in a forced-air circulation duct. The air is cooled by contact with the chilled surface of the brine-carrying coil and is circulated to the room. To dehumidify the room air properly, the brine in the cooling coil must be maintained at a temperature of 50°F or below.

Brine-chilling tests of the ice-bin heat exchanger were performed to determine whether the proposed design is adequate for supplying brine that is sufficiently cold. During cooling-mode operation, heat flows from the

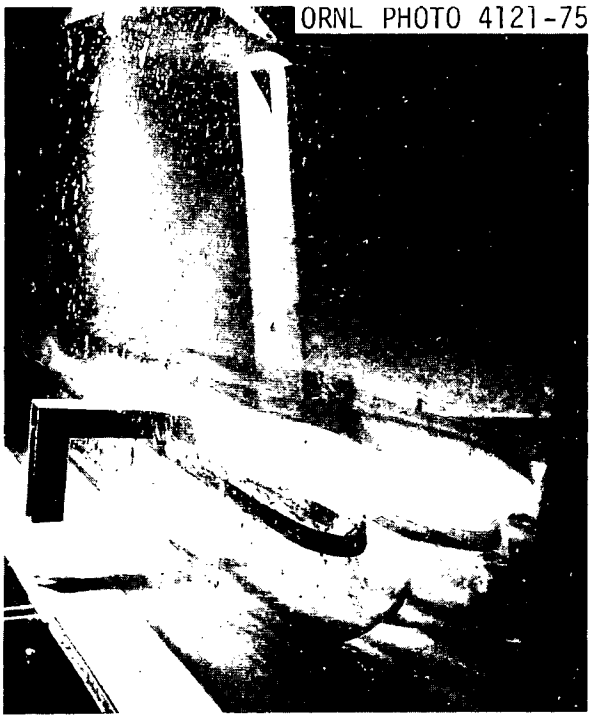

Fig. 12. The ACES ballast coil, showing radial cracks in ice cylinder.

warmed brine returning from the apartment cooling coil, through the metal wall of the heat-exchanger tube, to the ice stored in the bin. This heat flow melts a progressively larger core of the ice cylinder surrounding the heat-exchanger tube and chills the brine returning to the apartment cooling coil. The rate of heat flow from the heat exchanger to the ice bin was measured using the experimental test assembly described previously. The results obtained are shown in Fig. 13. The resulting heat transfer coefficient for the aluminum extrusion tube is 4.75 Btu hr^{-1} ft^{-1} $°F^{-1}$ of the logarithmic mean temperature difference (LMTD).

The measured heat-transfer coefficient is adequate for ACES cooling-mode requirements. The quantity of heat that could be transferred in 1 hr to a 1000-ft^3 tank having 1 ft of heat exchanger tube per cubic foot of tank would be (4.75 Btu ft^{-1} $°F^{-1}$)(1000 ft^3)(13°F LMTD), or 61,750 Btu. This rate of heat transfer is equivalent to more than 5 tons of refrigeration

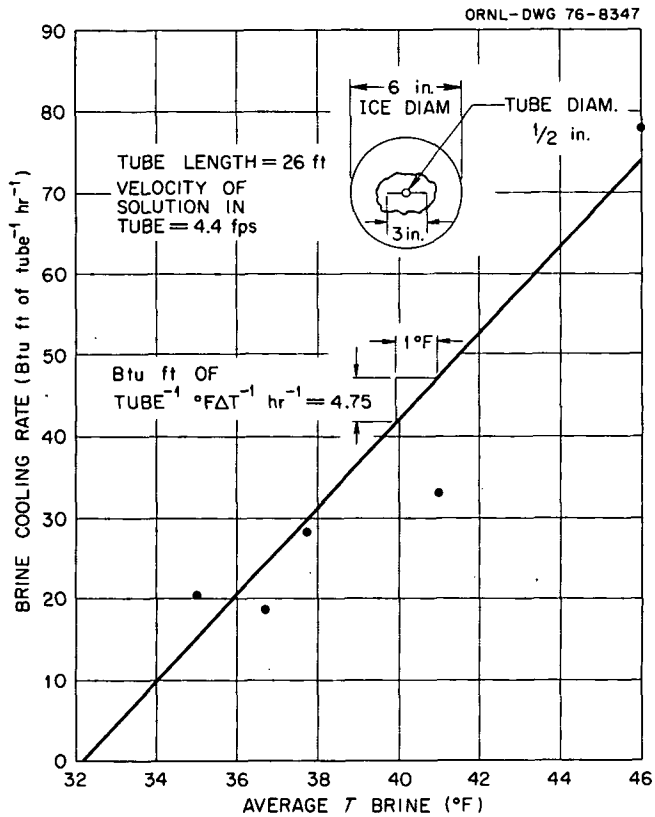

Fig. 13. Brine-cooling rate as a function of the initial temperature of brine entering heat-exchanger tubing.

and would result in the complete thermal discharge of the tank in 150 hr of operation. Thus, the brine-chilling tests confirm the adequacy of the ice-coil design for meeting the requirements of ACES cooling-mode operation.

5.3 Heatron Evaporator Test

An evaporator, manufactured by Heatron, Inc. of York, Pennsylvania, was tested for possible ACES application. As shown in Fig. 14, the evaporator features six aluminum spined tubes, each having a nominal IPS pipe size of 1/2 in., arranged in a vertical configuration. The brine flows downward inside the tubes in counterflow to the evaporating refrigerant

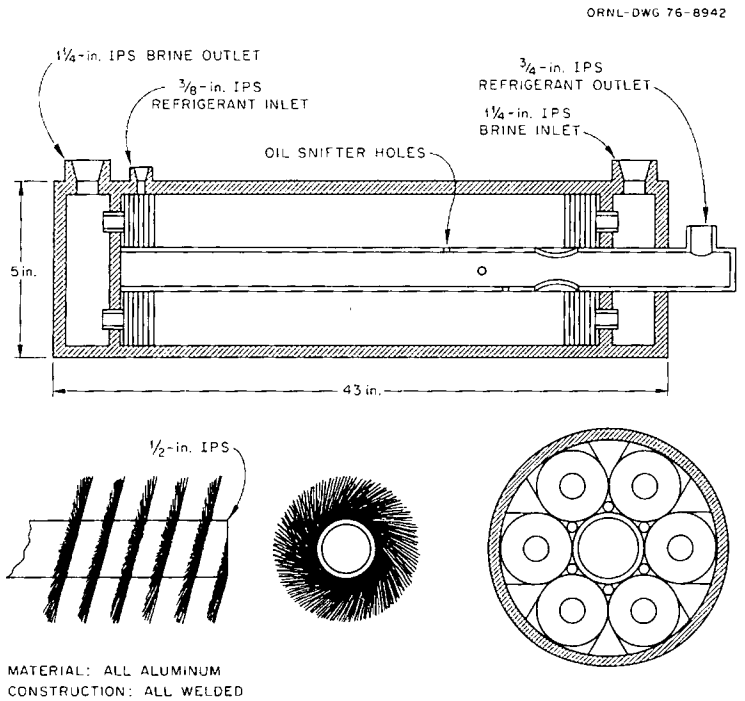

Fig. 14. The Heatron AW-24 experimental evaporator.

on the outside of the tubes. Oil return holes located near the top of the central core tube conduct lubricant (with refrigerant vapor) back to the compressor. The Heatron design was considered favorable for ACES application because its vertical configuration enables it to be installed in a limited space, such as a closet.

When the Heatron evaporator was installed in the experimental test assembly, the 1/3-hp brine-circulating pump was found to be able to deliver only 22 gpm instead of the desired 36 gpm brine flow. The pressure drop across the single-pass evaporator unit was found to be 0.685 psi at a brine-flow rate of 22.25 gpm. Figure 15 shows the test results, where the rate of heat flow, $\dot{Q} = (U \text{ Btu hr}^{-1} \text{ ft}^{-2} \text{ °F}\Delta T^{-1})(A \text{ ft}^2)$, is plotted as a function of the evaporator temperature. Based on the inside area of the tubes — 3.10 ft^2 — the heat-transfer rate, per °F LMTD, is 282 Btu/ft^2. The evaporator was returned to the factory and recircuited

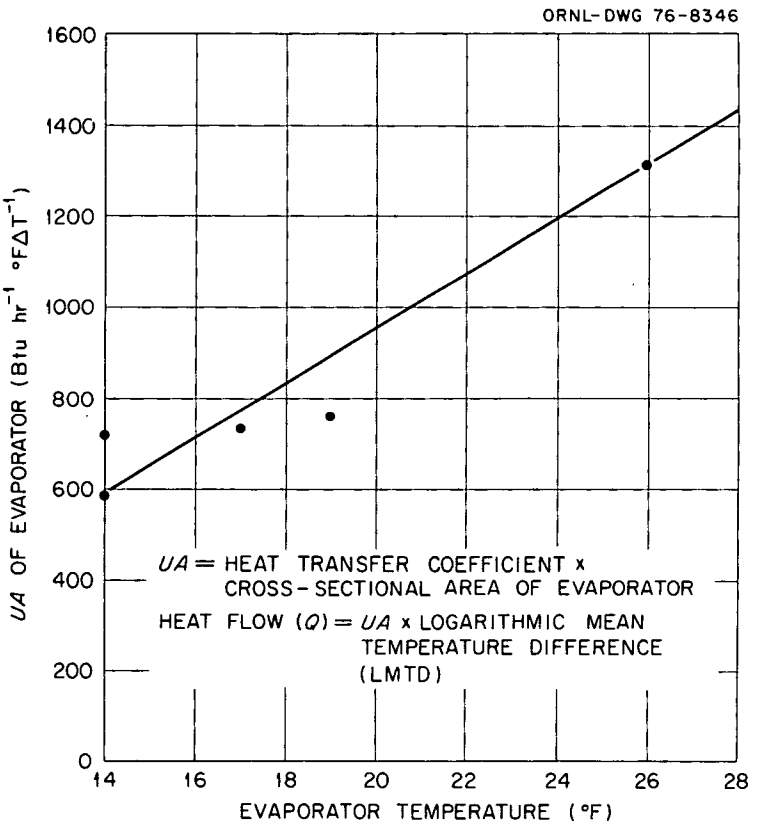

Fig. 15. Performance of the Heatron AW-24 experimental evaporator.

to a two-pass configuration to lower the brine-side pressure drop and to improve the overall heat transfer. The improved results are shown in Fig. 15. As modified, the Heatron design appears to be feasible and effective.

5.4 Water-Heater Test

The ACES system for producing domestic hot water, shown schematically in Fig. 1, consists of a side-arm heater tank that heats water drawn from the bottom of the hot-water storage tank by hot refrigerant from the heat-pump compressor. The refrigerant flows through low-fin copper tubes of a

desuperheater and condenser which are connected in series inside the water-heater tank, as shown in Fig. 16. The surrounding water, heated by contact with the outer surfaces of the heat-exchanger tubing, rises in a standpipe, or thermosyphon tube, to the hot-water storage tank. As hot water (120°F) is withdrawn from the storage tank to supply domestic loads, the tank is replenished with cold inlet water from the city mains.

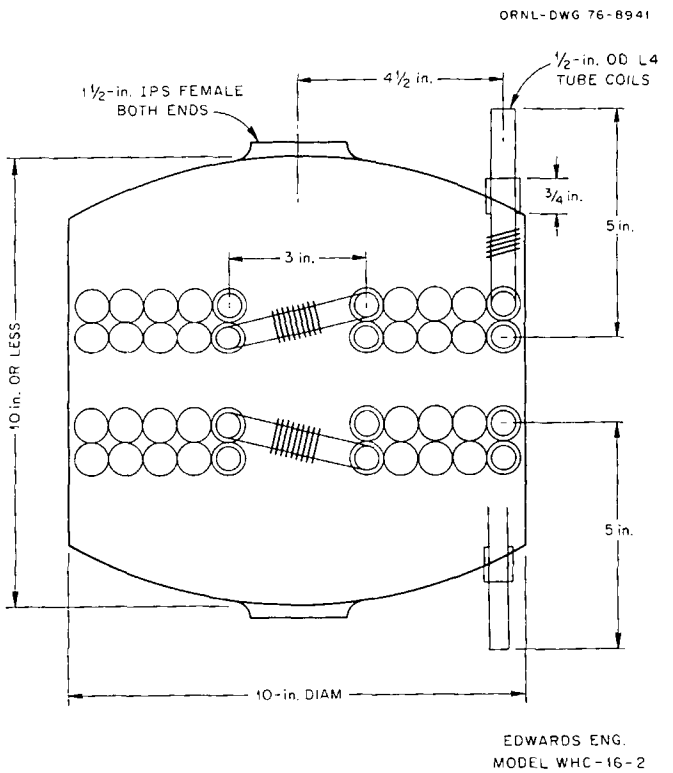

Fig. 16. The ACES water-heating superheater and condenser.

A series of experimental tests was conducted to determine the adequacy of the system design and to measure the rate of heat transfer from the heat-exchanger surfaces in the water-heater tank to the surrounding water. In the tests, a 3000-W variable output Chromalox heater was immersed in the brine line to control the evaporator load. The rate of heat transfer to the water at different evaporator temperatures was determined by measuring the equilibrium water inlet and outlet temperatures for a fixed flow of

water through the heater tank. A heat-transfer coefficient, $H(T_E)$, was then defined as $H(T_E) = Q/(T_C - T_O)$, where T_C is the condensing temperature of the refrigerant, T_O is the water outlet temperature, and T_E is the evaporator temperature at the simulated freezing load. The results, shown in Fig. 17, demonstrate that the heat-transfer coefficient increases with the evaporator loading and with the refrigerant-condensing temperature. Note that the heat-transfer coefficient, as defined, is not the same as that normally used in heat-transfer calculations.

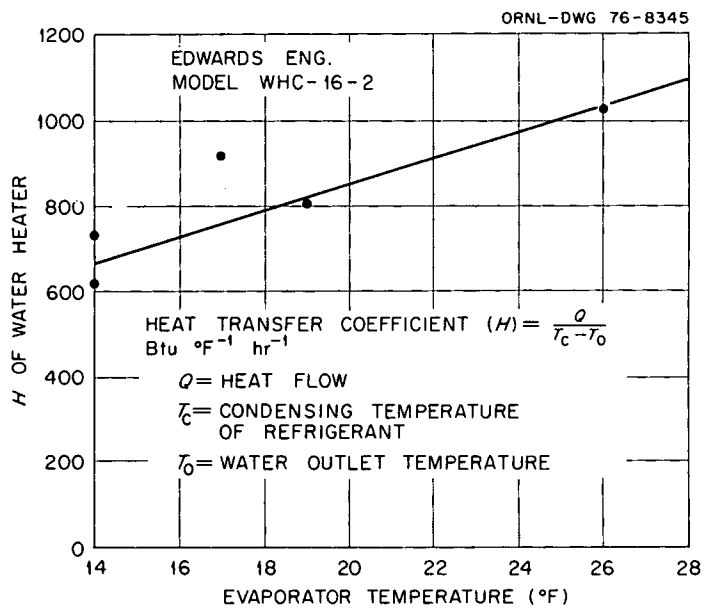

Fig. 17. Heat-transfer coefficient of the ACES water heater vs evaporator temperature.

5.5 Solar-Panel Test

Successful application of the ACES in different climatic zones will probably require the use of solar panels or outside air coils to compensate for imbalances in the annual heating and cooling loads. The panel will be used alternatively either to dissipate compressor heat by convection during summer nighttime hours or to collect solar energy during winter daytime hours for storage in the ice bin. A solar panel for this purpose,

having 25 ft^2 of collecting surface, was designed and constructed. Preliminary results obtained with the panel operating in the heat dissipation mode indicate that the coefficient of heat transfer to the summertime night sky is on the order of 1.8 to 3.5 Btu hr^{-1} ft^{-2} $°F^{-1}$. Future tests are planned with the panel operating as a solar energy collector in the wintertime. Because the fluid flowing through the collector tubes will be at or below ambient temperature, a high solar-energy-collection efficiency is anticipated.

REFERENCES FOR SECTION 5

1. Crouch and Adams, Inc., *Ice Storage Bin Cost Study, Annual Cycle Energy System (ACES)*, Oak Ridge, Tenn., December 13, 1974.

6. FUTURE PROGRAM ACTIVITIES

6.1 Field Demonstrations

6.1.1 Veterans nursing home

At the request of the Veterans Administration, heating and cooling loads have been calculated for a 60-bed nursing home to be constructed in Wilmington, Delaware. The maximum heating and cooling loads for the nursing home were calculated to be 230 and 179 kW respectively. Preliminary design calculations for this installation indicate that the ACES would be economically feasible and would save over 50% of the energy that would otherwise be required for a conventional space-heating and air-conditioning system. The COP of the 85-ton heat pump for the ACES is about 3.49, and the volume of the ice-storage facility could be as low as 1000 m^3. Because of space limitations, however, a 600-m^3 ice bin will be installed. This size bin is not large enough to meet the annual heating and cooling requirements of the building. Therefore, the bin will be supplemented with a solar collector and an outside air coil.

This large-scale ACES installation will help to simplify the load management problems of the utility serving the nursing home. During the hot months of July and August, when utilities experience their peak daytime load demand, the total energy requirement of the ACES nursing home installation amounts to less than 3 kW. At night, when the load on the utility lines is greatly reduced, the major portion of the ACES load occurs. Based on the favorable prognosis of the preliminary design analysis, the Veterans Administration has decided to proceed with the final engineering design and construction of the building. The authors intend to remain in close contact with this demonstration project and to offer advice and assistance upon request.

6.1.2 Single-family residence

Preliminary design planning has been completed for a single-family residence with a demonstration ACES which will be built in the Knoxville,

Tennessee area. The purpose of this project is to provide a real-life demonstration of the ACES concept and to measure its performance under realistic operating conditions. Tentative plans call for a two-story frame house, of largely conventional construction, having about 2000 ft^2 of living area. The building is designed to have three bedrooms and two baths and will employ forced-air heating and cooling with an ACES energy source.

The design of the building deviates from normal construction practices in that substantially greater amounts of insulation are provided to meet ACES requirements for economical operation and to reduce the size of the ice-storage bin. Present design plans stipulate that 6 in. of insulation be provided in the walls, 12 in. of batt insulation in the ceiling, and 6 in. of batt insulation in the floor. The windows are to be double glazed and the outside doors are to have 1-3/4 in. of urethane insulation and are to be sealed with magnetic weather stripping.

The ACES components have been sized in accordance with the climatic conditions of the Knoxville area and with the thermal envelope characteristics of the proposed shell design. Calculations performed with the THERMAL ACCOUNT computer program, using Knoxville weather tape data, show that the ACES ice-storage bin should have a capacity of 2280 ft^3. The ice bin will contain 2100 ft of heat-exchanger tubing and will be supplemented by a solar panel with 850 ft of tubing. (The aluminum tubing is 0.5 in. in diameter and has a co-extruded, 3-in.-wide axial fin to provide more heat-transfer surface area.) The heat pump for the ACES installation will have a heating output of 8.8 kW and a COP of about 3.

The capacity of the proposed ACES is sufficient for the Knoxville climate (3500 degree-days/year). The ice-storage bin is large enough to supply energy throughout the heating season without requiring auxiliary input from the solar panel. Enough ice will be formed during the heating season to last well into the cooling season. In the summer, after all of the ice has been melted, the heat pump will be operated at night, when the ambient temperature is below 80°F, to regenerate ice for use in cooling the building during daytime hours. The compressor heat will be used to produce domestic hot water or will be rejected to the night air by the solar panel.

The demonstration building will be equipped with a data-acquisition system which will log, on an hourly basis, the performance of individual components and of the system as a whole. After a period of normal-mode operation of the system under Knoxville climatic conditions, system operation simulating other climates and other modes of control is planned. The successful demonstration of the ACES under actual field conditions is expected to provide a major impetus to widespread commercial adoption of the ACES throughout the country. For this reason the demonstration project is being accorded high priority and efforts are being made to attain actual operation of the facility in early 1976.

6.2 Commercialization

6.2.1 Information exchange

In addition to the ACES demonstration project, awareness of the ACES concept is being actively promoted on an informal basis by the strengthening of contacts with potential ACES component manufacturers. Over the report period, building consultants and representatives of component manufacturers have visited the Oak Ridge National Laboratory to obtain information on the ACES system and its requirements. About 25 manufacturers have consulted with the Laboratory and have inspected the ACES test facility with the view of obtaining information relative to their possible participation in an ACES demonstration project. In light of this growing interest in the ACES concept, there appears to be a definite need for a more formal method of disseminating information about ACES on a broader basis.

To help meet the need for a broader, improved information exchange, an ACES workshop was held in the autumn of 1975. Invitations were extended to representatives from major components manufacturers, designers of heating and cooling systems, architectural and engineering firms, heat-transfer equipment manufacturers, utilities, consumers, refrigeration system manufacturers, bankers, and other marketing interests. It is hoped that this broad representation from the building and manufacturing industries will expedite the early commercialization of ACES.

6.2.2 ACES design manual

Present design methods for ACES applications use computer programs to determine the heating and cooling loads, the annual energy budget, and the proper sizes of components corresponding to the specific building and climatic zone being considered. In the future, as application of the ACES becomes more widespread, computer facilities for this purpose will inevitably be unavailable to many prospective designers and builders. Thus, a manual is needed to describe the underlying principles of the ACES concept and to provide step-by-step instructions for designing an ACES installation without the aid of a computer. The design manual could furnish pertinent weather data for all sections of the nation, necessary for properly sizing and matching system components. Information on equipment availability and performance characteristics should be provided. Recognizing the eventual needs of architects, designers, and builders who may wish to apply ACES, present program planning calls for the preparation of a comprehensive ACES design manual in the near future.

6.2.3 Components

Visited during this phase of the program have been numerous companies either currently producing components suitable for use in ACES or planning to do so in the future. The concern with equipment selection is to identify high-performance equipment that will yield the best operating results and to be aware of possible new developments in the field of heating and cooling systems. The search for improved components, through direct contacts with industry, is an ongoing process that will be maintained as an essential part of future program activities.

Appendix A

ACES COMPONENTS TEST ASSEMBLY

Equipment Specifications

Compressor — Coplematic Model AAT-1-0150-TAD, 440-V, 3-phase

Freezing tank — 3/8-in. steel, 12 ft long x 5 ft wide x 4-1/2 ft deep, insulated with 1 in. of Armaflex

Electric heater — Chromalox, 240-V, 3000-W, Cat # ARTM 3000

Ballast coils — 1/2-in. steel pipe, galvanized and black iron, 6-in. cc ∿82 lin ft ea

Freeze test coil — ∿26 ft active coil, 3 in. wide, 0.020 fin, 1/2 OD tube x 0.035 wall.

Brine tank — Stainless steel drum, 1 in. Armaflex insulation

Evaporator — Heatron, sketch SK-ECH-1875 (1/8/75), Fig. 6

Scales — Chatillon, type 6100 0-100#

Desuperheater/condenser — Edwards Engineering Company, per sketch Fig. 8

Domestic Water Tank — 22 in. diam x 26 in. high, 50 gal, 1 in. Armaflex insulation

Heat exchanger — Heatron part #150-B

Pump 1 — Teel, Mod 3P577a, 1 in. Dayton 1/3-hp motor

Pump 2 — B and G, 1/12 hp, 3/4 in. (P3-113-5-3-)

Pump 3 — B and G, 1/6 hp, 3/4 in. (118F2F)

Thermostatic expansion valve — 82, VG, SUE-3, 3/8 x 5/8 ODF, 5 ft Sporlan

Brine tank copper coil — 1/2-in. copper, 50 ft long

ORNL-DWG 76-8940

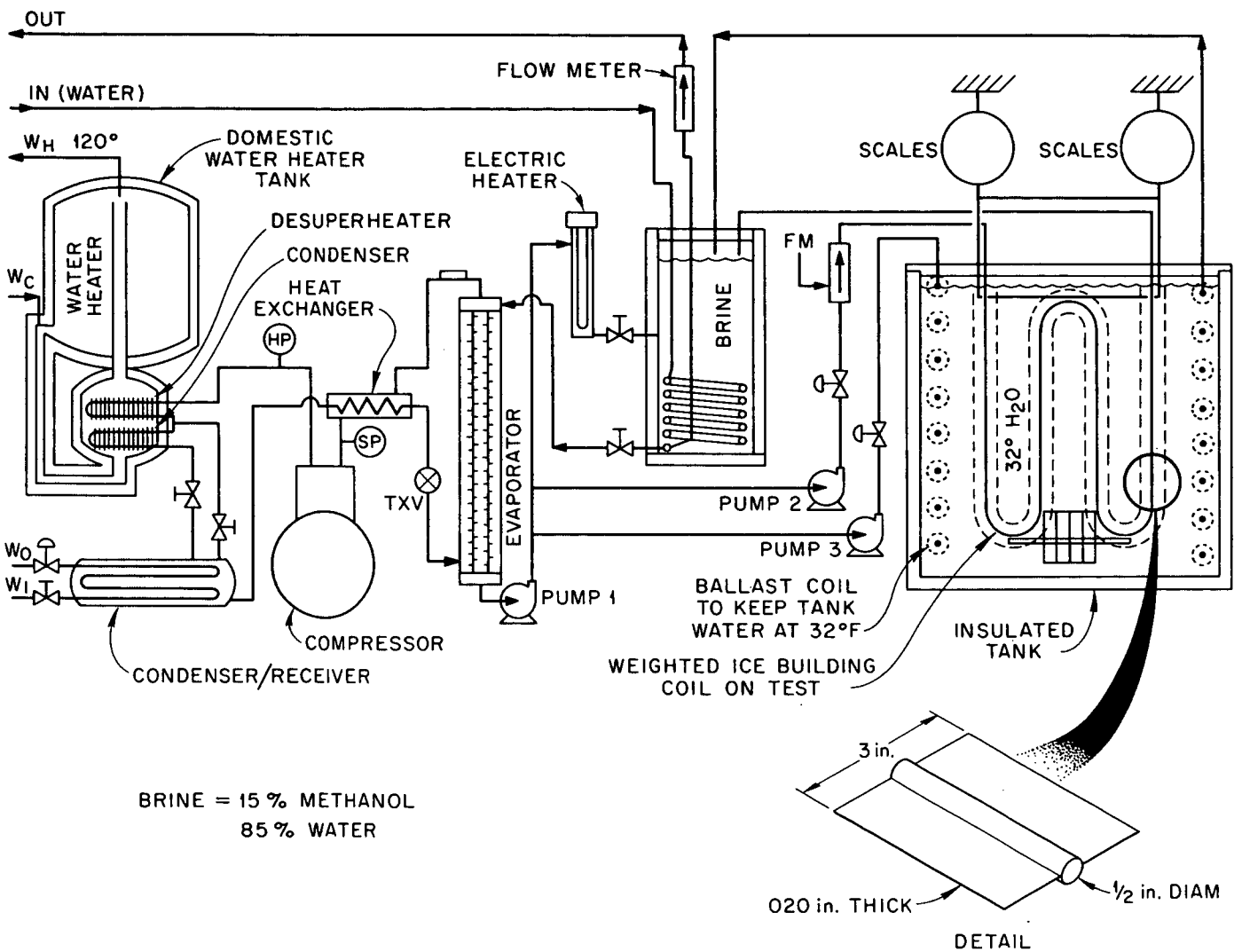

Fig. A.1. The ACES component test equipment.

Internal Distribution

1. S. I. Auerbach
2. S. E. Beall
3. D. J. Bjornstad
4. D. Brooks
5. J. R. Buchanan
6. R. S. Carlsmith
7. W. S. Chern
8. F. L. Culler
9. J. G. Delene
10. A. P. Fraas
11. W. Fulkerson
12. G. S. Gill
13. W. R. Griffith
14. M. Guthrie
15. N. Hardin
16. V. O. Haynes
17. E. A. Hirst
18. E. C. Hise
19. A. S. Holman
20. P. L. Johnson
21. S. I. Kaplan
22. R. S. Livingston
23. J. W. Michel
24. W. R. Mixon
25. J. C. Moyers
26. E. A. Nephew
27. H. Postma
28. M. W. Rosenthal
29. T. H. Row
30. R. L. Spore
31. E. G. Struxness
32. D. B. Trauger
33. G. U. Ulrikson
34. A. M. Weinberg
35. A. Zucker
36. Biology Division Laboratory (1)

37-38. Central Research Library (2)

39. Institute of Energy Analysis, ORAU
40. Laboratory Records, ORNL R.C. (1)

41-43. Laboratory Records Department (3)

44. ORNL — Y-12 Technical Library Document Reference Section (1)
45. ORNL Patent Office (1)

46-184. Energy Conservation Section (137)

External Distribution

185. Research and Technical Support Division, ERDA-ORO

186-472. External Energy Conservation Distribution Mailing List (287)

473-500. Technical Information Center, ERDA, P. O. Box 62, Oak Ridge, TN (27)

☆U.S. GOVERNMENT PRINTING OFFICE: 1976-740-046/6