ORNL/Sub-78/14233/1

IGC

DECEMBER 1977

INVESTIGATION OF ALTERNATE TYPES OF WATER STORAGE COMPONENTS TO BE UTILIZED IN CONJUNCTION WITH THE ACES SYSTEM

Report prepared by
THE OFFICE OF IRWIN G. CANTOR
919 THIRD AVENUE NEW YORK, N. Y. 10022
under subcontract number 19 x 14233V
for
OAK RIDGE NATIONAL LABORATORY
OPERATED BY UNION CARBIDE CORPORATION · FOR THE DEPARTMENT OF ENERGY
Contract Contract No. W-7405-eng-26

Printed in the United States of America. Available from
National Technical Information Service
U.S. Department of Commerce
5285 Port Royal Road, Springfield, Virginia 22161
Price: Printed Copy $6.00; Microfiche $3.00

This report was prepared as an account of work sponsored by an agency of the United States Government. Neither the United States Government nor any agency thereof, nor any of their employees, contractors, subcontractors, or their employees, makes any warranty, express or implied, nor assumes any legal liability or responsibility for any third party's use or the results of such use of any information, apparatus, product or process disclosed in this report, nor represents that its use by such third party would not infringe privately owned rights.

ORNL/Sub-78/14233/1

INVESTIGATION OF ALTERNATE TYPES OF WATER STORAGE COMPONENTS TO BE UTILIZED IN CONJUNCTION WITH THE ACES SYSTEM

December 1977

Report prepared by
THE OFFICE OF IRWIN G. CANTOR
919 THIRD AVENUE NEW YORK, N.Y. 10022
under subcontract number 19 x 14233V
for
OAK RIDGE NATIONAL LABORATORY
Oak Ridge, Tennessee 37830
operated by
UNION CARBIDE CORPORATION
for the
DEPARTMENT OF ENERGY
Contract No. W-7405-eng-26

ABSTRACT

This report is directed toward incorporation of the ACES (Annual Cycle Energy System) thermal storage component (water tank) into residential buildings. Two major areas are addressed; 1) cost of the tank, and 2) integration with the construction project.

The report assesses nationwide tank building capability and average costs are given (six geographic adjustment factors are included in order to reflect regional cost variations). Exclusive of traditional wood stave and welded steel tanks, costs of free standing tanks were found to average $2.00/cu.ft. for a 500 cu.ft. tank and $1.37/cu.ft. for a 3000 cu.ft. tank.

The least costly tanks are found to be those which are field constructed and fully integrated with the project design. Utilizing traditional materials and procedures (masonry and concrete) offers the greatest flexibility and lowest cost. Such integration can create cost savings of approximately 50% since load bearing walls can fulfill additional structural (foundation) requirments.

The least costly method of tank construction currently available was found to be "foam-form block", a proprietary system using preshaped polystyrene open cell blocks between which are placed reinforcing steel and concrete.

EXECUTIVE SUMMARY

FINDINGS:

Research conducted on the cost and availability of water storage tanks suitable for an ACES installation indicates that the more commonly used tank structures such as wood stave and welded steel are the least economical construction materials for such use.

In the size range studied (500 cu.ft. to 3000 cu.ft.) no sizable tank-building industry, except wood and steel currently exists to produce a product meeting the ACES requirements.

Tank configuration and structural requirements are not complicated nor are they beyond the skills of any competent builder using current technology. Field-erected construction procedures, using locally available materials, are found to be the most economical answer to tank requirements. It is desireable to permit a building contractor a choice of method and materials for construction of the tank depending upon the geographic location of the housing units.

CONCLUSIONS:

Integration of the ACES with the total project design is essential for economical development of the system. The use of the tank as a portion of the foundation walls indicates as much as a 50% savings in total tank cost. For masonry and concrete construction a unit cost of less than $1.00/cu.ft. for volumes of 2000 cu.ft. and greater is realizable. (Geographic variations in labor and materials show a spread of approximately 17% for tanks constructed of concrete, masonry or wood.)

Prefabrication of the ACES tank is practicable in volumes of 1000 cu.ft. or less, but only precast concrete cylinders (pipe sections) currently offer economic advantage. Multiples of precast concrete cylinders set in series are less costly than a single large cast-in-place concrete tank and may afford a degree of functional versatility as well.

To date, the most economical tank construction system utilizes a proprietary system of "foam-form" blocks with cast-in-place concrete so situated as to form a portion of the building foundation.

RECOMMENDATIONS:

It is recommended that additional research be carried out on two concepts having the potential for low cost and flexibility as free-standing tanks particularly suitable for retrofitting of an existing residence:

1) Expanded polystyrene tank section (block) which can be site assembled.

2) Roll form cylindrical tank utilizing plastic fibre or paper sheeting.

It is further recommended that additional study of the integrated components of the ACES be carried out for a greater number of acutal projects than heretofore. The relation of the tank shape to that of the immersed coil; adjacent or superimposed equipment; and location within particular buildings should be further studied and estimated cost comparisons with standard systems for heating and air conditioning be made.

ACES REPORT

WATER STORAGE COMPONENT

SECTION I.

Brief History and Background of ERDA/ACES Program.
Review of Studies and Data Compiled by ORNL.
Evolved Criteria for Thermal Storage Component.

SECTION II.

Description of IGC Research Effort
Summary of Findings

SECTION III.

Analysis of the System:

- Placement & Location
- Configuration
- Installation & Method of Construction
- Engineering & Architectural Considerations
- Costs & Value Analysis

Design of Prototypical Containers

- Prefabricated - 500-1000 cu.ft.
- Site Assembled 1500-3000 cu.ft.

Geographical Distribution

SECTION IV.

Typical Schematic Details & Cost Estimates

SECTION V.

Appendices

SECTION I

IA. BACKGROUND OF THE ACES PROGRAM

The Annual Cycle Energy System (ACES) is a means of heating and cooling interior space and supplying domestic hot water by extracting heat energy from a fixed volume of stored water. The process creates ice which is accumulated as a reserve for cooling. Supplementary solar heat energy can be utilized in balancing system requirements. The fundamental components of the system are a heat pump, an exterior radiative/condenser panel and a water container.

The initial inquiry and design development of the ACES took place in January/June 1975 at Oak Ridge National Laboratory. This phase included investigation to establish materials and controls design. Computer programs suitable for ACES demonstration test monitoring were developed and system components tested. The results of these studies were published in October 1976 as The Annual Cycle Energy System: Initial Investigations (ORNL/TM-5525).

The second phase of the ACES development consisted of the construction of a single family residence equipped with appropriate components. This building was constructed in Knoxville Tennessee as an experimental project located on Alcoa Highway in Knox County. One of the results of the experiment was a determination

that a study of the water storage tank design should be made. Being a significant component of the system and an object of considerable bulk and weight, it was evident that the structural characteristics and possibility of incorporating them with the architectural requirements of the system would require study and evaluation.

At present the ACES is undergoing evaluation to integrate the components of the system: thermal storage, heat exchange, supplementary solar panels, etc. in order to arrive at a working total system suitable to the various climatic, geographic and economic conditions which prevail throughout the country. Flexibility as to the components and their inter-relationships will undoubtedly prove the key to a successful system.

Competitive cost of the ACES with other common energy systems is critical to large scale use and adoption, particularily in the residential market. As the cost of gas and oil escalate, making them too expensive for domestic heating purposes, other systems employing currently available skills and technology can be developed and effectively utilized. The Annual Cycle Energy System has that potential.

IB. TANK STUDY BY ORNL

Studies of the thermal storage components (water storage tank) of the ACES have been undertaken in three phases. The first mode was in the area of a small scale working model of the system. The second of these was full size construction of experimental installations at two locations. The third mode has consisted of inquiry of various component manufacturers.

IB.1 Small Scale Working Model

A primary purpose of construction of the small scale working model was to study the operating characteristics of the refrigeration equipment and the controls for the system. It was important to determine the configuration of ice build-up and its effect upon tank water levels, as well as testing equipment to shut down the system when critical conditions of ice and temperature are obtained.

IB.2 Full Size Experimental Installations

The first of these full size experimental installations was constructed in Knoxville Tennessee; and second in Richmond Virginia. The first assembly utilized a proprietary system of polystyrene "foam-form" blocks into which was cast reinforced concrete. The second assembly was of wood frame construction. Both were built as integral components of the experimental house in which they were to function.

IB.2 (Cont.)

The attached Sketch (See Page 6a) of the ice-building coils and their arrangement within a rectangular tank illustrates the installation at Knoxville.

Experience with testing of ice freezing control systems completed in June 1976, served as the basis for design of equipment installed in the demonstration house.

Subsequent design development of the cooling system has advanced the use of an evaporative ice maker suspended above the water tank rather than the immersed coil of the first generation ACES.

IB.3 ORNL Inquiry of Manufacturers

ORNL has solicited manufacturer information from the following sources for the type of tanks indicated below:

Precast Concrete Tanks (Site Erected)
C&B Silo Co.
Charlotte, Michigan

Cast-In-Place Concrete Tanks (Site Erected)
Foam-Form Canada Ltd.
Scarborough, Ontario

Steel Tanks (Site Erected)
Clayton & Lambert Mfg. Co.
Buckner, Kentucky

IB.3 (Cont.)

Wood Tanks (Site Erected)
American Plywood Assoc.
Tacoma, Washington

Precast Concrete Tanks (Prefabricated)
American Solorize Co.
Princeton, New Jersey

Plastic Form Domes (Site Erected)
Spirex Structures Inc.
Warren, Michigan

Summaries of information obtained are in the Appendices Item A.

UT-ACES DEMONSTRATION HOUSE
ICE FREEZING CONTROL SYSTEM

H. C. FISCHER JUNE 7, 1976

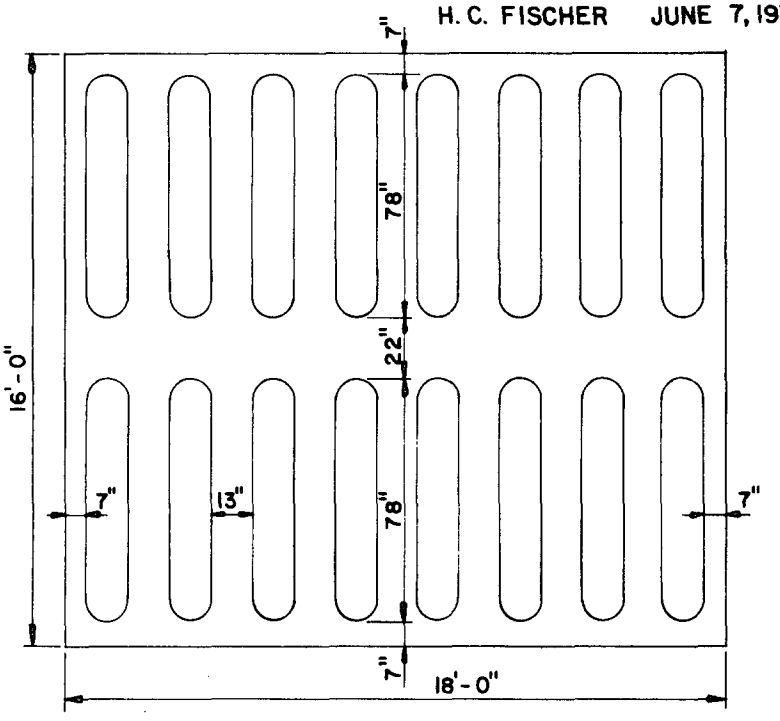

PLAN VIEW
SHOWING 16 ICE BUILDING COILS

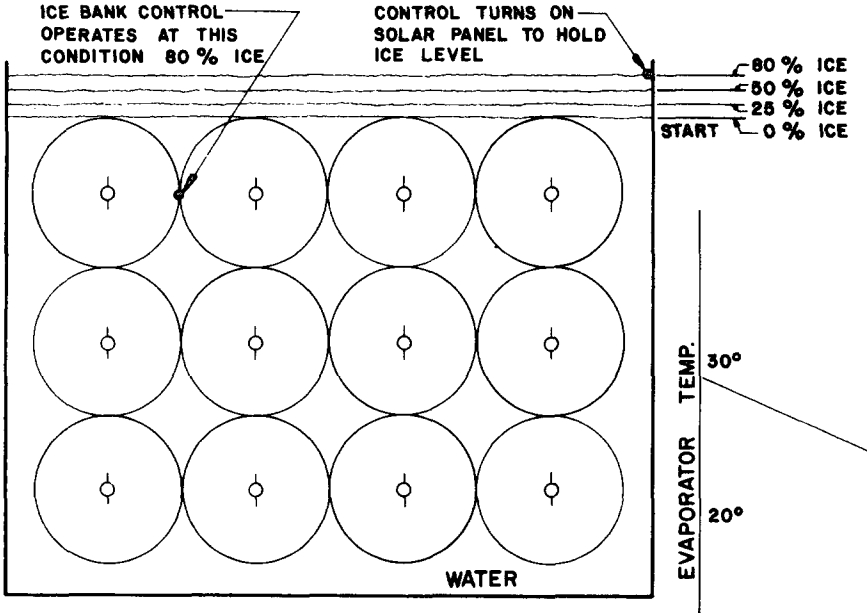

SCHEMATIC SECTION OF ICE TANK

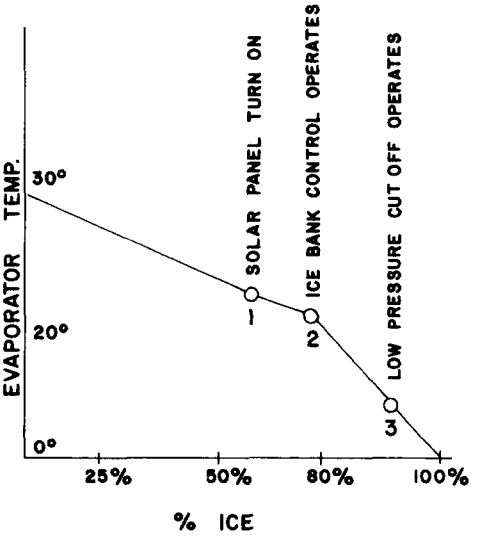

IB.4 OIGC Criteria for Thermal Storage Component

As a result of the design and testing effort to date, the following general criteria for the water storage tank have evolved.

1. Tank capacities will vary between 500 cu.ft. and 3000 cu.ft. in 500 cu.ft. increments.

2. Tank must be capable of retaining water and ice between temperatures of 32°F and 60°F (0°C to 15°C). Total solid ice conditions will never be allowed to occur.

3. Tank must be covered for security as well as support of ice making equipment which must be accessible for maintenance. Cover should contain a manhole and be capable of sustaining 50 lbs./sq.ft. live load.

4. Thermal insulation value must equal R-16. Insulation of the tank bottom is not required.

5. Tank must have a minimum of internal bracing which would interfere with the free circulation of water and ice.

6. Tank structures should have a life expectancy comparable to the building for which it is installed. (A replacement interior liner can be considered.)

IB.4 (Cont.)

7. Tank design and construction must meet all applicable national codes and standards; and utilize readily available materials and techniques for the various geographic areas of the United States.

8. Vapor movement and penetration must be controlled.

SECTION II

IIA. THE OIGC RESEARCH EFFORT

The Office of Irwin G. Cantor followed two research tracks in developing this report. The first track is that of manufacturer's performance and the current "state-of-the-art" on a national basis. The second track consisted of dialogue both in-house and with Union Carbide personnel. The first track was selected in order to relate the ACES program to the practical realities of available capability; the second was pursued to assure innovative engineering commensurate with ACES concepts.

Twenty-two letters of inquiry were sent to various companies having capability and experience in tank manufacture. Additionally, extensive telephone inquiry was made with other manufacturers producing either tanks or related products such as insulation, liners and concrete framing equipment.

Manufacturers and suppliers of related liquid storage containers such as swimming pools, manure storage, silos and septic tanks were contacted as well.

Internal dialogue included contact with Dr. Mason H. Sommerville at the Engineering Experiment Station of the University of North Dakota; discussions with Mr. Harry C. Fischer and Mr. Eugene Hise; and visits to the Oak Ridge National Laboratories and the

IIA. (Cont.)

experimental ACES installations at Knoxville, and Nashville Tennessee. We are indebted to all of these Gentlemen for their guidance and assistance.

IIB. SUMMARY OF FINDINGS

The results of this study which has concentrated on available market products and present day costs are summarized as follows:

1. Substantially lower unit costs result from incorporating the tank into the basic design of a building project.

2. Despite the large variety and capability nationwide for the manufacture of storage tanks which meet a diverse array of processes and procedures, there is at present no product, that is being produced commercially, specifically designed for a water/ice storage tank which can fully meet the program requirements.

3. The most cost effective tanks in sizes greater than 1000 cu.ft. are constructed on-site utilizing foam plastic insulation as an integral component of the tank design.

4. In the middle size range of 1500 to 2000 cu.ft. multiples of a prefabricated 500 cu.ft. tank may be more cost effective than a single field-constructed tank.

5. Using presently available free-standing tanks, commercially marketed, it is not possible to achieve a unit cost of $1.00/cu.ft. or less.

SECTION III

IIIA. ANALYSIS OF THE SYSTEM

IIIA.1 Placement and Location of the System

The considerable size of the storage tank with its component equipment and the collective weight of the whole assembly are such that placement and location becomes a major design consideration. Under circumstances of new construction, greater flexibility of approach to the problem is possible than in a situation of adding the ACES components to an existing building. In the latter retro-fit case, exterior site location will generally, be the simplest and most economical approach.

Considerations of lateral force upon the walls of the tank when full, suggest maximum burial of the tank in the earth. Consideration of lateral force by surrounding earth on the unfilled tank suggest minimum burial in the ground. Additionally, considerations of winter ground frost conditions in northern climates must be made. The Engineering Experiment Station of the University of North Dakota suggests a partially buried tank as a compromise meeting these varying criteria. The top of the tank could serve as a patio surface adjacent to the home and, being elevated above the ground, it would not be subjected to

IIIA.1 (Cont.)

vehicle loads. This approach is most viable when considering application of ACES to an existing building.

Access to the operating equipment must be considered since repair, servicing, and/or replacement of components will be necessary.

The heat pump and other equipment related to the thermal storage component can be located remote from the tank (an exception being the evaporator plate method which must be mounted atop the tank). The distance is limited only by efficacious transfer of heat by the coolant from the tank to the equipment.

Below grade location of the tank has the advantage of the insulating value of the surrounding earth which will lower the requirements for additive insulation. Variations of costs with regard to this aspect should not exceed 10% of the total cost of the installation.

IIIA.2 Configuration

The basic process requirements of the ACES, utilizing the immersed coil or over-tank evaporator plates, suggest no extreme dimensions for the tank shape. Consideration of structural efficiency suggests a cylindrical shape for the container; however, specific conditions at a project

IIIA.2 (Cont.)

location may preclude use of a standard container or a standard construction process. For middle range (1500-2000 cu.ft.) installations, modular tanks may be a practicable solution particularly if twin installation of the refrigeration components is justified.

The depth of the tank for an immersed coil condition ought not to exceed an eight foot floor to ceiling basement height, and dimensions must be coordinated with truck bed and road height clearances.

Over-the-road trucking of cylindrical and rectangular tanks of appropriate shape is limited to volumes of about 1000 cu.ft. (12'diam. x 8' high, or 12' long x 11' wide x 8' high). Beyond that size, prefabrication cost factors for multiple tanks should be closely compared with the greater structural efficiency of a single site-constructed thermal storage tank.

The arrangement of the immersed coil in the tank and the method of support require some consideration. One aspect of the coil design becomes apparent in considering cylindrical tank design; a spiral coil arrangement is compatible with the cylindrical shape and reduces the number of fiitings to a minimum. Support of the coil

IIIA.2 (cont.)

from the overhead structure (or if an independent tank, from the tank roof) obviates problems of penetrating the tank liner and simplifies installation. Similar considerations are required using the overhead-evaporative plate system.

Generally speaking, rectangular tanks are more costly than cylindrical tanks due to the latter's more efficient surface to volume ratio. (An exception exists for any construction system more easily handled in rectangular forms such as cast-in-place concrete.) Nonetheless a rectangular tank will yield more usable adjacent floor space within a structure.

IIIA.3 Installation and Methods of Construction

Basic to the installation of the ACES water storage tank is initial site excavation and preparation for placement of the tank.

Test pits and/or borings made during the project design phase will have guided the decision as to location as well as depth and size of footings.

The small home builder who frequently dispenses with prior sub-soil investigations, will have to now learn about his site prior to construction - particularily in rocky terrain or low lying, near water table sites.

IIIA.3 (Cont.)

Presence of ground water at or above the proposed tank foundation level will influence the design of the tank in order to preclude the possibility of unstable conditions.

Excavation must be made to natural or compacted bearing material capable of sustaining the load of the tank, the water, superimposed equipment and the tank roof without significant differential settlements. However in most instances this should not exceed a bearing requirement of 1000 lbs./sq.ft.

Excavation of site material should allow for working clearances to prepare the foundation, and work to the angle of repose of the soil type being excavated.

Two basic approachs to foundation design are anticipated. The first is that of a continuous footing to support the load-bearing tank wall. Continuous footings are assumed to be cast-in-place concrete, with the tank bottom of level, compacted sand fill.

The second approach is that of a level graded bearing area for a tank having a structural bottom. The latter condition is most likely for a prefabricated tank. Level grading of the bearing area for support of a structural floor tank can consist of crushed stone or compacted porous fill.

IIIA.3 (Cont.)

Addition of insulation at the job-site is assumed to be standard for the majority of tank designs since damage to preinstalled insulation is a risk. (Site damage of the "Foam-Form" system was an indirect cause of initial tank leakage at the Knoxville installation.) Nonetheless, some types of tanks, prefabricated with integral insulation, can be shipped and handled safely without damage providing they are handled cautiously.

Components of the thermal storage tank comprise the foundation, floor, structural wall, insulation, water impervious surface, and top closure. Cost factors in the local market will determine to what degree any or all of the components can be combined. For instance, only an installed-cost comparison at the site will determine if bitumen coated galvanized corrugated steel pipe with welded seams is more cost effective than the same pipe and vinyl liner in lieu of welded seams. Of the readily available materials only expanded polystyrene currently offers a truly economical combination of insulating quality and structural capability.

IIIA.4 Engineering and Architectural Considerations

Engineering considerations of the ACES tank design are to accomodate the following:

1. Structural
   a) contain water/ice volume
   b) resist exterior loads
   c) sustain equipment
   d) sustain superimposed live loads
   e) seismic stability (regionally)
   f) non-settlement of foundations

2. Moisture Control
   a) foundation drainage
   b) liner for leakage
   c) vapor barrier

3. Thermal
   a) heat transfer of tank structure
   b) additional insulation

IIIA.4 (Cont.)

Architectural consideration of the water storage tank concerns integration of the tank with other spaces and equipment comprising the building project. Installation of the tank in close proximity to the controls and other components of the system is desirable to maintain optimum efficiency. Location of the tank can be above grade, below grade or within the building.

In the smaller size range (500-1500 cu.ft.) the engineering and architectural aspects of the water storage tank do not present extraordinary or unusual problems significantly greater than most small building components such as fuel storage tanks, septic tanks, furnaces, etc. In the larger size range (1500-3000 cu.ft.) concerned in this report (and larger storage tanks beyond the cope of this report) design and construction aspects are somewhat more critical, but certainly not beyond the present day skills of a competent builder.

IIIA.4.1 Engineering

The ability of the tank to contain the stated volume of water and sustain the weight of the equipment is the fundamental structural concern. The factors to be considered include the depth of water and its pressure

IIIA.4.1 (Cont.)

against the tank walls, the shape of the tank and the equipment weight. A major portion of the equipment may be mounted at locations atop the tank (up to 1000 lbs weight must be considered).

Resistance to external forces are of greatest concern under conditions of the tank being below grade. The tank must be designed to resist surrounding earth or superimposed loads if vehicles might cross over its top. Conditions are most critical when the tank is empty.

Seismic stability design of the tank is dependent upon the earthquake probability zone in which the project is located and is determined by code. The hazard factor and risk to human safety is relatively low as long as the tank is below grade.

Foundation design is dependent upon size and configuration of the tank as well as bearing conditions at the project site. Assuming that dry stable soils are available, no unusual problems are forseen since bearing loads will not be excessive.

Moisture control will generally require a tank liner which serves the purpose of preventing tank leakage and and overhead vapor barrier to prevent air-borne moisture escape. Foundation drainage of either porous pipe and/or

IIIA.4.1 (Cont.)

graded crushed stone should be introduced if ground water conditions are evident.

Insulation characteristics are most concerned with loss of cold to the surrounding medium be it soil or atmosphere. With the exception of molded expanded polystyrene or "foam-form" tank construction, all others will require added insulation. It is assumed that the insulation will be applied at the site under most conditions.

IIIA.4.2 Architecture

Location aspects of the water storage tank center around concealment or visibility. Concealment below grade of a 500 cu.ft. tank is a relatively simple matter; but as the tank approaches 3000 cu.ft. size, a significant component of architectural mass is encountered.

Selection of the type and shape of tank will depend on whether the installation is for an existing house or a new one.

Slab-on-grade construction of smaller houses with accompanying excavation for footings and utilities

IIIA.4.2 (Cont.)

suggest burial of the tank if soil conditions permit. (Burial beneath the slab is not recommended since future access is impracticable for the evaporator plate systems). Larger houses, particularly in northern climates, generally include excavated basements which suggest location of the tank in that area of the building. The largest tank considered in this report, 3000 cu.ft., is a substantial volume which will undoubtedly impact design features of the home. Just as architectural massing of a house is influenced by extensive use of solar collection panels, equally creative architectural treatment of the ACES thermal storage component is possible.

Applications of the ACES to multi-unit housing such as trailer courts, motels, attached dwellings and apartment houses pose interesting questions as to unit efficiency, shared capability and multiple and/or parallel installations. Architectural aspects of such building types is beyond the scope of this report.

IIIA.5 Cost and Value Analysis

IIIA.5.1

It must be emphasized that cost effectiveness of the water storage tank is directly related to the practical possibilities of integrating the tank with the house structure in order to reduce costs(figures 1 & 2).

The integrated element most readily identified is the foundation of the building. Utilizing the least costly proposals which have the additional potential for carrying superimposed load - the field-built masonry tank, the cast-in-place concrete tank, or the "foam-form" system - important savings for total tank costs can be realized.

	Base Cost Free Standing Tank		Deduct*	Add**	Net Cost Integral House Tank	
	Tank	Unit			Tank	Unit
Foam-Form	$2672	$1.34	$1665	$166	$1173	$.59
Masonry	$3236	$1.62	$1946	$346	$1636	$.82
Concrete	$3823	$1.91	$2241	$346	$1928	$.96

* Assumes two walls and footing plus top of tank are integral items to house structures; i.e.: house foundation and first floor.

(Refer to cost breakdowns in Section IV; Tank Size 2000 cu.ft.)

** Assumes additional excavation and insulation of two foundation walls for masonry and concrete structure.

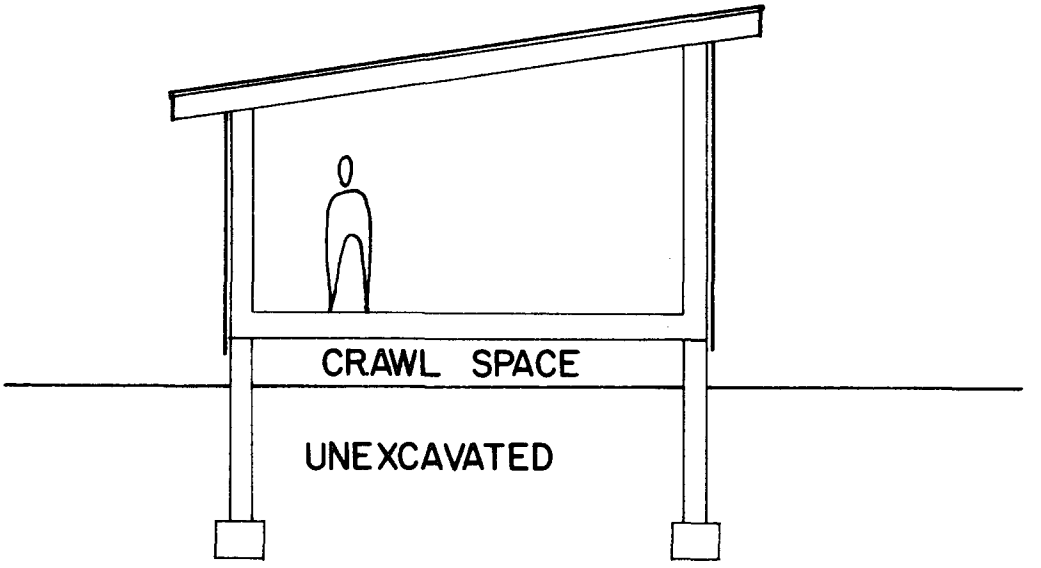

fig. 1

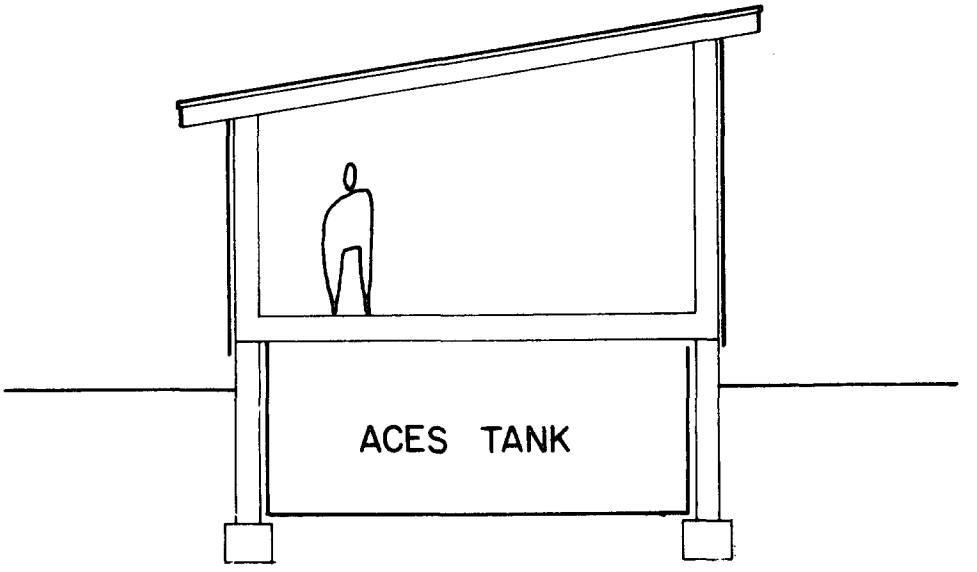

fig. 2

IIIA.5.2

The obvious conclusion to be drawn from the above example is that the water storage tank component of the ACES make-up is most cost effective under circumstances of new construction and integration with other building requirements. Cost savings of 40 to 60% are indicated. (Refer to Pages 59 - 61)

Such savings are obviously more meaningful in geographic/climatic locations where relatively deep foundations are required - i.e.: New England and the North Central States.

In locations where extensive excavation is not required in order to establish secure foundations, it is practicable to consider the water tank as an above grade supporting wall element which can carry of roof extension (Figure 3).

Similarly, sites with sloping or irregular terrain can often be beneficially developed using the tank as a foundation element (Figure 4).

It is of interest that at times - in order to provide the living area requirements of a home - additional subgrade space is provided in the form of large cellars or crawl spaces to "fill out the footprint of the building". In such instances the placement of the ACES tank in these

IIIA.5.2 (Cont.)

excess spaces results in a more cost effective home for the buyer than with spaces which are frequently under utilized.

The importance of incorporating the ACES tank with the architectural and engineering design of the total new structure to maximize economy cannot be overemphasized. It is evident that the larger tank sizes suitable for houses of 2000 sq.ft. to 3000 sq.ft. would prove even more cost effective because of their lower cost to volume ratio.

The cost estimates developed in Section IV do not attempt to account for the use value of the space within the building being used for a storage tank. Quite obviously the 3000 cu.ft. tank occupies what could constitute usable space, or, with increased expenses, habitable space which could in certain instances, have greater "value" than that of a water storage tank.

The objective of this report is to define the tank cost in terms of fulfilling equipment requirements of the Annual Cycle Energy System. The total cost of the installed system as a viable answer to fuel conservation and energy use appears to be competitive with present heating/air conditioning techniques. However, direct

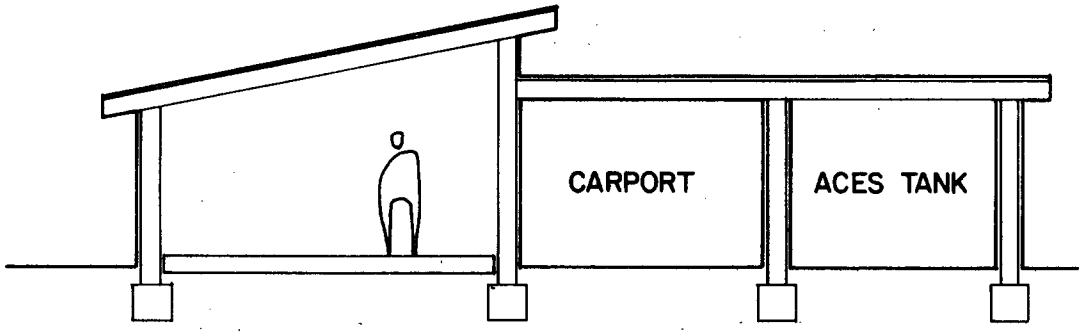

fig. 3

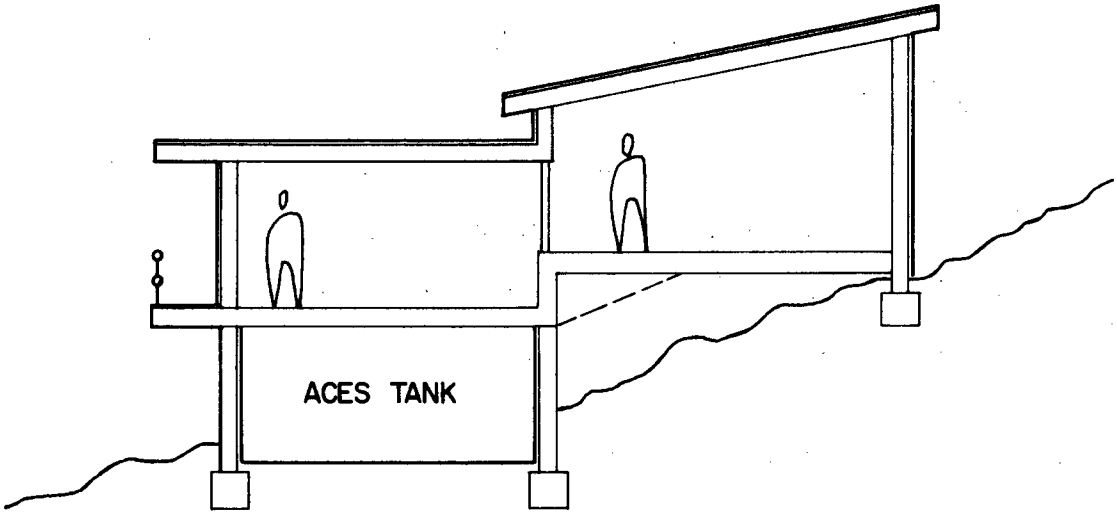

fig. 4

IIIA.5.2 (Cont.)

commercial application in various geographic areas is necessary to prove it.

To this end it is imperative that a concerted national educational program providing this information to Architects, Engineers and Builders be undertaken so that they can "think tank".

IIIA.5.3

Considering the circumstances of retrofitting an existing dwelling, it would seem most desirable to capture the usable and encloseable space above the tank and expand the dwelling with a new patio (Figure 5) or enclosed room (Figure 7) rather than surrendering existing basement areas (Figure 6). Conversely, whereas retrofitting in itself would not prove cost effective, if an expansion of usable space is proposed, the opportunity to accomodate an economical ACES exists. The cost per cubic foot of the water storage tank incorporated in new foundation work would be lower than if the tank were constructed independently.

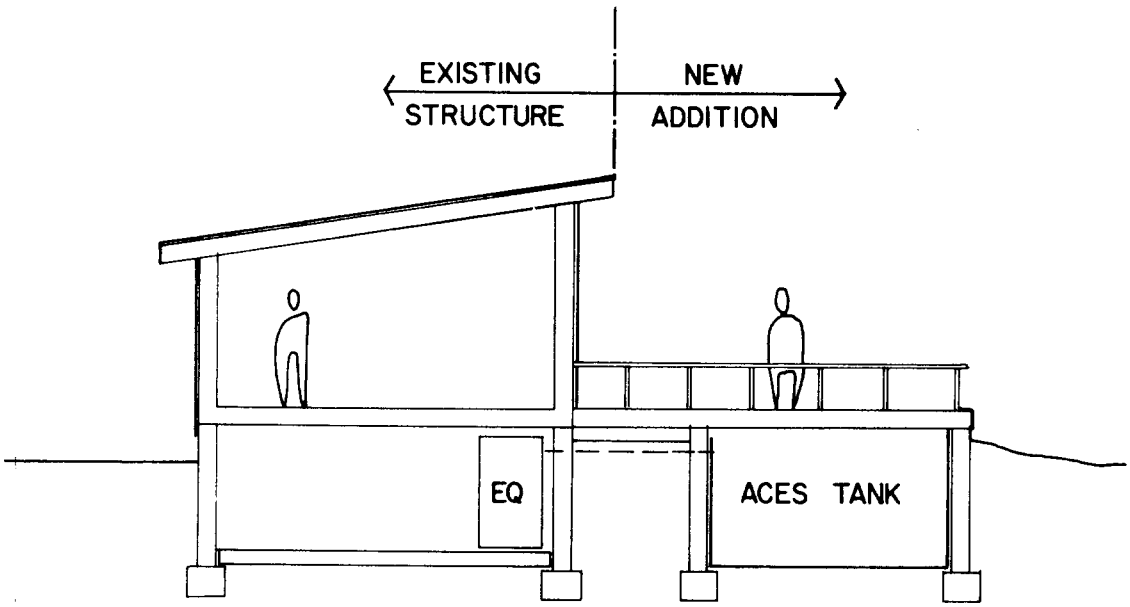
EXISTING
STRUCTURE
NEW
ADDITION
EQ
ACES TANK

fig. 5

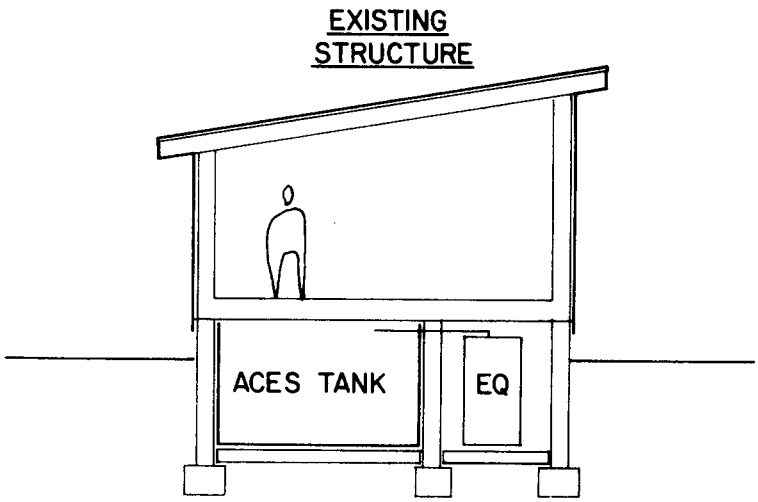
EXISTING
STRUCTURE
ACES TANK
EQ

fig. 6

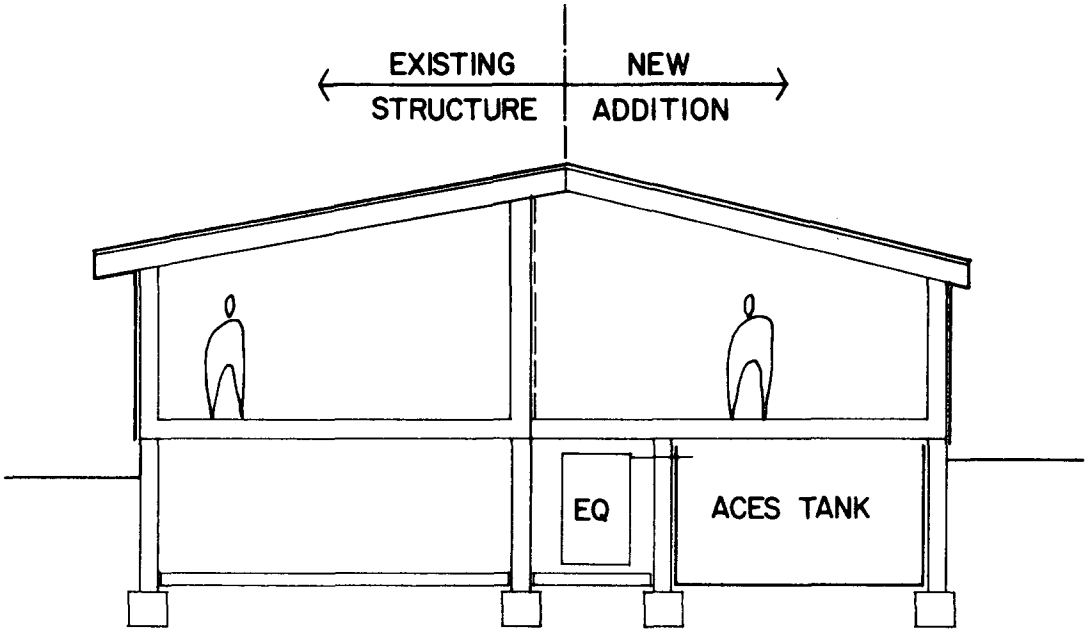

fig. 7

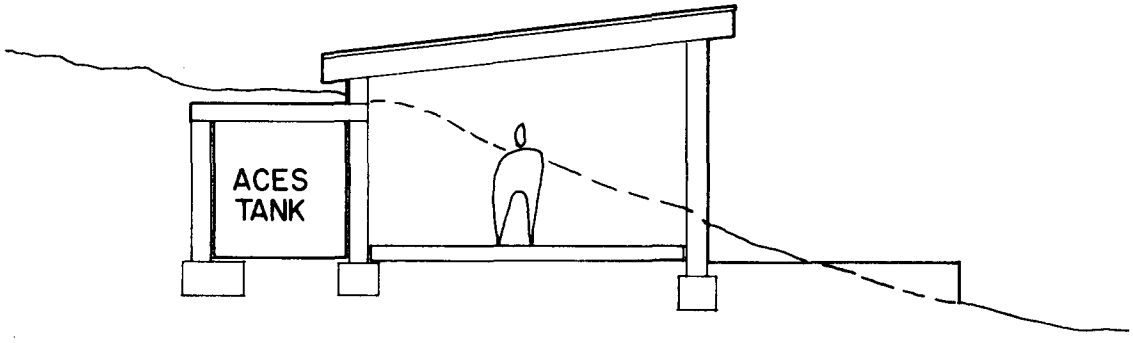

fig. 8

IIIA.5.4

The design of a project effecting maximum energy conservation through site development can be realized by placing the building partially below grade and using proper solar orientation. This would tend toward a smaller tank with lower total cost. This approach indicates how resolution of structural requirements can be done in a manner that will accomodate the Annual Cycle Energy System both functually and aesthetically. (Figure 8)

III.B Design of Prototype Containers

IIIB.1

For the purpose of prototype designs certain basic preconditions have been established. Any variation from these basic assumptions would entail review and redesign of the container to meet local conditions.

The preconditions are: normal soil conditioning including undisturbed bearing and soil stability, freedom from ground water and absence of rock excavation.

This study has divided the container construction/installation program into prefabricated and site-constructed designs. Prefabricated tanks are assumed practicable in the 500-1000 cu.ft. range (3750-7500 gal.) and site-constructed designs are assumed for the larger size range of 1000-3000 cu.ft. (7500-22,500 gal.). This rather arbitrary classification reflects general considerations of container size and weight rather than representing a specific recommendation; it is not intended to preclude a series set-up of prefabricated tanks.

Prefabricated containers can be constructed of wood, steel, fiberglass, concrete and plastics, which range will show considerable variation in weight of the tank but no significant variance in bulk.

IIIB.1 (Cont.)

Site-constructed containers can be constructed of all of the above materials and introduce designs options such as plastic foam core steel faced panels, or polystyrene "foam-form" for cast-in-place concrete. These latter represent assemblies which are most practicable for site construction and less so for transport in completed form.

IIIB.2 Prefabricated Container

The prefabricated container is assumed to be practically limited by consideration of size and weight suitable for shop handling, transportation, and site installation. The capacity range selected for prefabrication is 500-1000 cu.ft. Based upon process requirements of the ACES, length, width and depth dimensions are as nearly equal as practicable. Selected sizes have been coordinated with over-the-road trucking capability. Weight considerations suggest a maximum of ten tons for field handling with simple hoists.

For practical application of the ACES to projects of varying size, a reasonable variation of tank sizes must be available, if the inherent cost advantages of prefabrication are to be realized. If a nominal 500 cu.ft. (3750 gal.) increment is considered, then two sizes will be required.

IIIB.2 (Cont.)

Further, variation of shape allows cylindrical and rectangular volumes. Such a moderate variation is practicable for prefabrication and warehousing of a construction project.

The following "stock" sizes are practicable:

SIZE	APPROX. VOL.
8' high - 9' diam.	500 cu.ft.
8' high - 12' diam.	1000 cu.ft.
8' high - 8' wide - 8' long	500 cu.ft.
8' high - 11' wide -12' long	1000 cu.ft.

IIIB.3 Site-Constructed Container

A site-constructed container can be of any size and, by virtue of that characteristics, as well as over-the-road transport limitations, the site-constructed designs are proposed for program requirements of 1000-3000 cu.ft. capacity. Since the site-constructed container can be integrated with other construction requirements and processes of the project, it is logical to assume use of the building foundation walls as part of the tank.

IIIB.3 (Cont.)

Consistency of design and efficiency of the construction process suggest that the complete tank be constructed of the same materials comprising the foundation walls. That is: if the foundation wall is of reinforced masonry the tank walls should be also; if reinforced concrete foundation walls are used, the tank walls would be of the same material. While wood studs and sheathing can be used for the interior building side walls of the tank, we question the economies of this approach for an integral tank.

An approach to construction of the tank which disassociates it from integration with the foundation structure of the building allows for a wider choice of available construction methods. The range of options include wood, steel and expanded polystyrene plank in a number of different assemblies best described generally as "stake and panel" design. Additionally, the traditional wood stave tank and steel panel tank designs are readily available in most parts of the country from established manufacturers. (Cost information supplied by wood and steel tank manufacturers indicate these to be the most expensive type of tanks.)

IIIB.4 Other Concepts of Exploration

The use of a flat surface rolled to a cylindrical shape and strapped about the outside has been developed for forming cast-in-place concrete columns up to five feet in diameter and 20 feet high. The advantages of this concept include lightweight, simple transport, (in small rolls) and low cost for material. It is probable that a paper, fibre or plastic sheet material of sufficient stiffness and surface friction characteristics could form the requisite cylindrical volume for and ACES tank in the 500-1000 cu.ft. size. Such a product would be very suitable for erection of a tank in an existing cellar space to which bulk access is limited.

IIIC. Geographic Distribution

OIGC research effort on the ACES thermal storage component has been directed to a variety of manufacturers in all regions of the United States in order to evaluate the geographical aspects of tank building capability. Generally, all regions have local capabilities suitable for distribution of standard materials and products. Within any region, the relative remoteness of a building site may increase costs due to transportation. Additionally, certain regions (and localities) have more economical building resources peculiar to the region. (Lumber in the northwest for example.)

In the case of site-constructed tanks, local economy and building skills will influence the choice of tank construction, and the greatest economy will be obtained by permitting the Contractor a choice of tank structure.

Prefabricated designs utilizing precast concrete products will depend upon availability of a local industry. Pipe products such as a 10' diameter corrugated steel pipe, while distributed nationally are manufactured only in certain locations and may be subject to cost and delay in delivery.

SECTION IV. TYPICAL SCHEMATIC DETAILS & COST ESTIMATES

Description of various tanks studies in detail are contained in this section. Prices are installed costs under normal conditions and represent national averages. A schedule of Cost Adjustment factors to reflect variations in various geographic locations is included in Appendix "C". Sources of cost data are prices quoted by manufacturers and the 1977 Dodge Manual for Building Construction Pricing and Scheduling.

The assemblies detailed herein are those found to be least costly. Welded steel, wood stave, and large size fiberglass reinforced plastic tanks are, generally speaking, two to three times as costly as site-built tanks utilizing standard construction techniques. Quoted prices of these types of tanks are included in the cost summaries. Because of their high price range no further detail is appropriate in this report.

It should be emphasized that assemblies suitable for load bearing condition (cast-in-place concrete, foam-forms, masonry and wood frame) will promote lower total project costs when appropriately integrated with the building design, (refer to Section IIIA.5.1, and Pages 59-61).

CYLINDRICAL TANK SCHEDULE OF SIZES

Approx. Vol. Ft.^{3}	Actual Vol. Ft.^{3}	Ht. Ft.	Diam. Ft.	Perim. Ft.	Base Area ¢	Wall Area ¢	Base Area ¢
500	509	8	9	28	64	226	290
1000	904	8	12	38	113	302	414
1500	1413	8	15	47	117	377	554
2000	2034	8	18	57	254	466*	720*
2500	2512	8	20	63	314	518*	832*
3000	3039	8	22	69	380	570*	950*

RECTANGULAR TANK SCHEDULE OF SIZES

Approx. Vol. Ft.^{3}	Actual Vol. Ft.^{3}	Ht. Ft.	W. Ft.	L. Ft.	Perim. Ft.	Base Area ¢	Wall Area ¢	Base Area ¢
500	512	8	8	8	32	64	256	320
1000	1056	8	11	12	46	132	368	500
1500	1560	8	13	15	56	195	448	643
2000	2048	8	16	16	64	256	528*	784*
2500	2592	8	18	18	72	324	594*	918*
3000	3040	8	19	19	78	380	644*	1024*

* Area adjusted to reflect use of footing with sand bottom in lieu of slab. Increase wall height (per detail) by three inches.

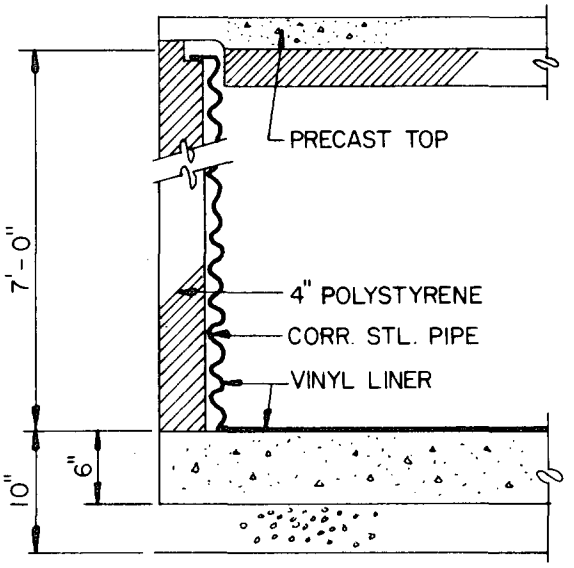

CORRUGATED STEEL
TYPE - 1

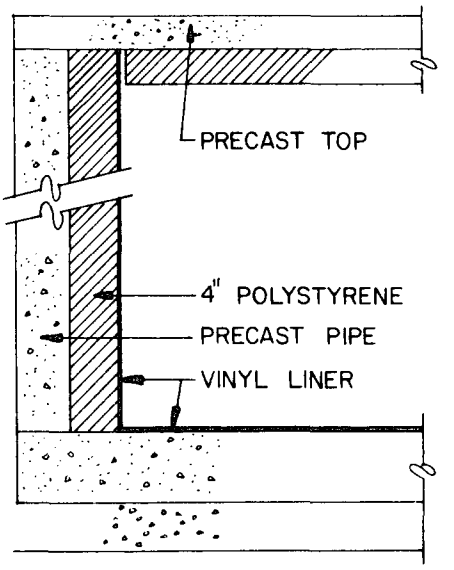

PRECAST CONCRETE
TYPE - 2

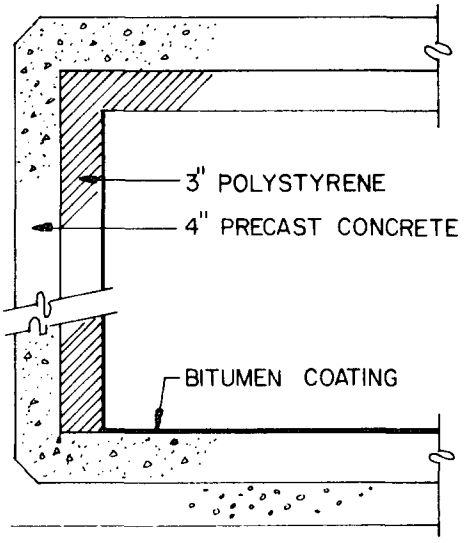

PRECAST CONCRETE
TYPE - 3

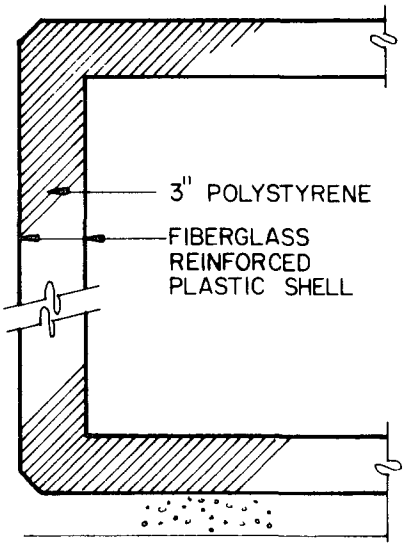

REINFORCED PLASTIC
TYPE - 4

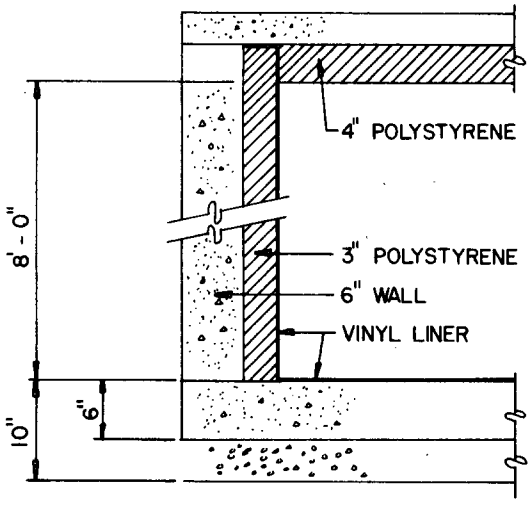

CONCRETE
TYPE 5

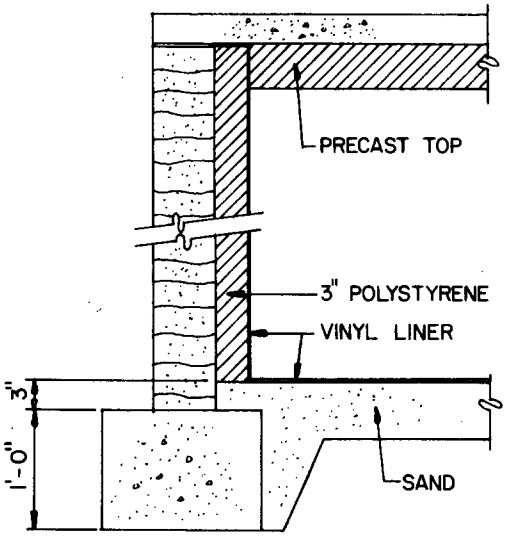

MASONRY
TYPE 6*

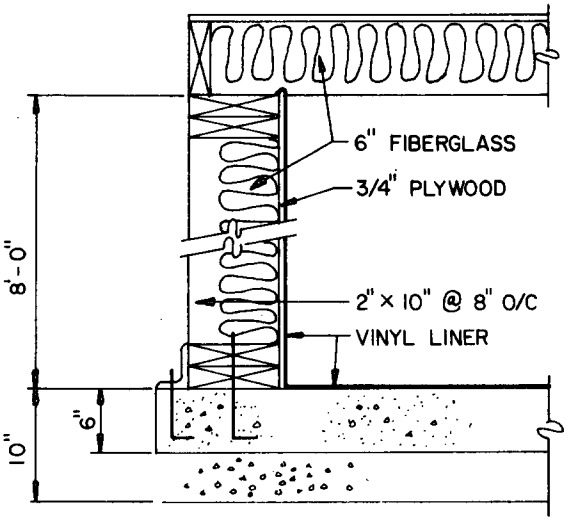

WOOD FRAME
TYPE 7

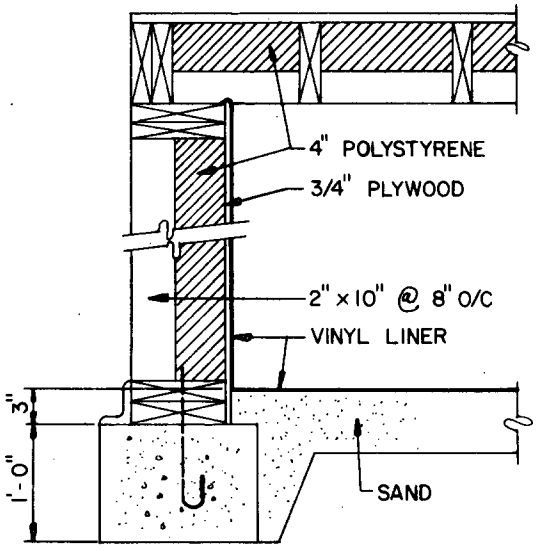

WOOD FRAME
TYPE 8*

* ALTERNATE BASE DETAIL FOR TANK SIZES OF 2,000 CU. FT. (AND LARGER) IS LESS COSTLY THAN SLAB SUPPORT.

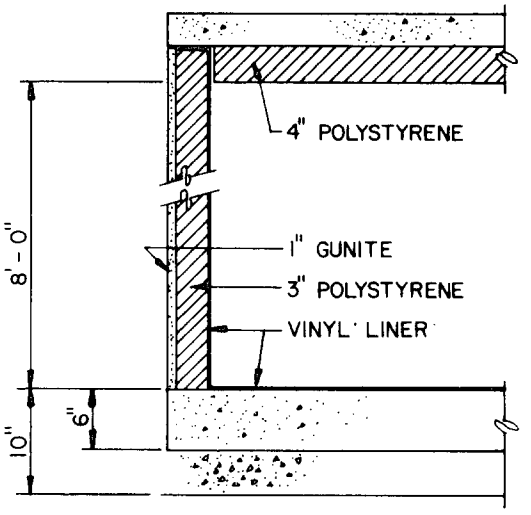

CEMENT COAT
TYPE-9

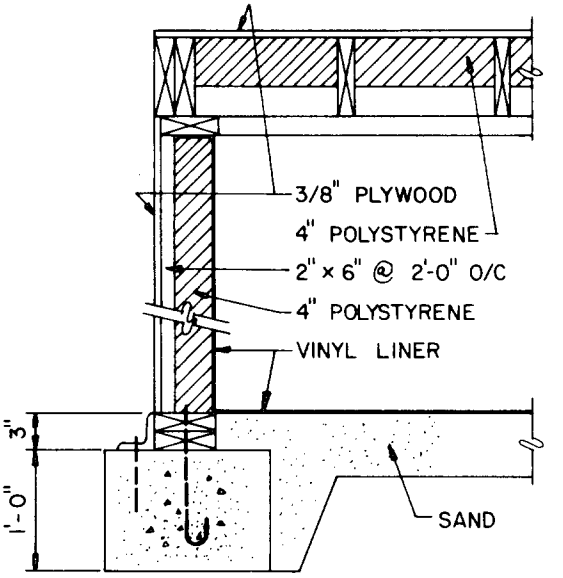

POLYSTYRENE PLANK
TYPE-10*

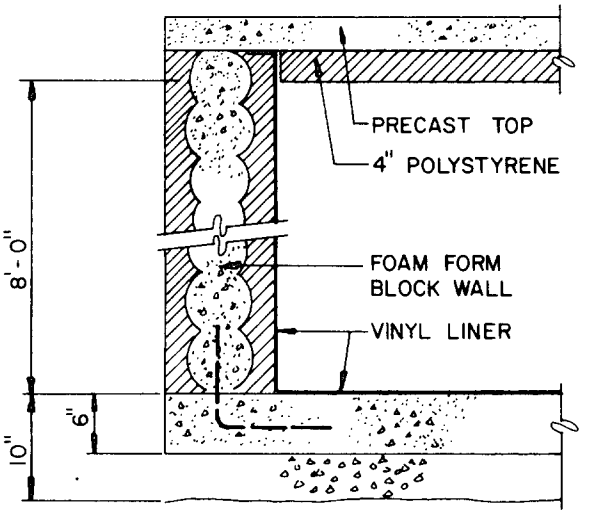

TYPE-11

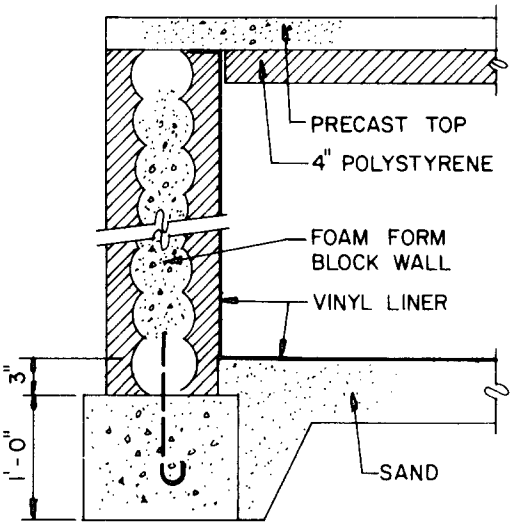

TYPE-11A*

* ALTERNATE BASE DETAIL FOR TANK SIZES OF 2,000 CU.FT. (AND LARGER) IS LESS COSTLY THAN SLAB SUPPORT.

COST COMPARISONS

FREE STANDING TANK

500 Cu.Ft. Tank		TYPE-1 Corrugated Steel		TYPE-2 Precast Concrete	
ITEM	AREA Per Sq.Ft.	UNIT PRICE $/Sq.Ft.	TOTAL $	UNIT PRICE $/Sq.Ft.	TOTAL $
6" Slab	79	2.33	182.91	2.33	182.91
Wall Assembly	220	4.80	1435.20	1.98	435.60
Liner	299	.25	74.75	.25	74.75
Insulated Top	79	3.59	283.61	3.59	283.61
TOTAL			1976.47		976.87
Cost/Ft.^{3}			3.95		1.95

1000 Cu.Ft. Tank		TYPE-1 Corrugated Steel		TYPE-2 Precast Concrete	
ITEM	AREA Per Sq.Ft.	UNIT PRICE $/Sq.Ft.	TOTAL $	UNIT PRICE $/Sq.Ft.	TOTAL $
6" Slab	113	2.33	263.29	2.33	263.29
Wall Assembly	339	4.80	1627.20	1.98	671.22
Liner	452	.25	113.00	.25	113.00
Insulated Top	113	3.59	405.67	3.59	405.67
TOTAL			2409.16		1453.18
Cost/Ft.^{3}			2.41		1.45

COST COMPARISONS

FREE STANDING TANK

500 Cu.Ft. Tank		TYPE-3 Precast Concrete		TYPE-4 Reinforced Plastic	
ITEM	AREA PER SQ.FT.	UNIT PRICE $/SQ.FT.	TOTAL $	UNIT PRICE $/SQ.FT.	TOTAL $
4" Crushed Stone	64	.20	12.80	.20	12.80
Wall Assembly	384	2.72	1044.48	5.00	1920.00
Insulation	320	.98	313.60	(incl.)	-
TOTAL			1370.88		1932.80
Cost/Ft.^{3}			2.74		3.87

1000 Cu.Ft. Tank		TYPE-3 Precast Concrete		TYPE-4 Reinforced Plastic	
ITEM	AREA PERSQ.FT.	UNIT PRICE $/SQ.FT.	TOTAL $	UNIT PRICE $/SQ.FT.	TOTAL $
4" Crushed Stone	132	.20	26.40	.20	26.40
Wall Assembly	632	2.72	1719.04	5.00	3160.00
Insulation	500	.98	490.00	(incl.)	-
TOTAL			2235.44		3186.40
Cost/Ft.^{3}			2.24		3.19

COST COMPARISONS

FREE STANDING TANK

500 Cu.Ft. Tank		TYPE-5 Concrete		TYPE-6 Masonry	
ITEM	AREA Per Sq.Ft.	UNIT PRICE $/Sq.Ft.	TOTAL $	UNIT PRICE $/Sq.Ft.	TOTAL $
6" Slab	64	2.33	149.12	2.33	149.12
Wall Assembly	256	4.29	1098.24	3.18	814.08
Liner	320	.25	80.00	.25	80.00
Insulated Top	64	3.59	229.76	3.59	229.76
TOTAL			1557.12		1272.96
Cost/Ft.^{3}			3.11		2.55

1000 Cu.Ft. Tank		TYPE-5 Concrete		TYPE-6 Masonry	
ITEM	AREA Per Sq.Ft.	UNIT PRICE $/Sq.Ft.	TOTAL $	UNIT PRICE $/Sq.Ft.	TOTAL $
6" Slab	132	2.33	307.56	2.33	307.56
Wall Assembly	368	4.29	1578.72	3.18	1170.24
Liner	500	.25	125.00	.25	125.00
Insulated Top	132	3.59	473.88	3.59	473.88
TOTAL			2485.16		2076.68
Cost/Ft.^{3}			2.49		2.08

COST COMPARISONS

FREE STANDING TANK

1500 Cu.Ft. Tank		TYPE-5 Concrete		TYPE-6 Masonry	
ITEM	AREA Per Sq.Ft.	UNIT PRICE $/Sq.Ft.	TOTAL $	UNIT PRICE $/Sq.Ft.	TOTAL $
6" Slab	195	2.33	454.35	2.33	454.35
Wall Assembly	448	4.29	1921.92	3.18	1424.64
Liner	643	.25	160.75	.25	160.75
Insulated Top	195	3.59	700.05	3.59	700.05
TOTAL			3237.07		2739.79
Cost/Ft.^{3}			2.16		1.83

2000 Cu.Ft. Tank		TYPE-5 Concrete		TYPE-6 Masonry	
ITEM	AREA Per Sq.Ft.	UNIT PRICE $/Sq.Ft.	TOTAL $	UNIT PRICE $/Sq.Ft.	TOTAL $
1"x1'-4" ftg.	64 L.F.	5.92	378.88	5.92	378.88
Wall Assembly	528	4.29	2265.12	3.18	1679.04
Sand Bottom	256	.25	64.00	.25	64.00
Liner	784	.25	196.00	.25	196.00
Insulated Top	256	3.59	919.04	3.59	919.04
TOTAL			3823.04		3236.96
Cost/Ft.^{3}			1.91		1.62

COST COMPARISONS

FREE STANDING TANK

2500 Cu.Ft. Tank		TYPE-5 Concrete		TYPE-6 Masonry	
ITEM	AREA Per Sq.Ft.	UNIT PRICE $/Sq.Ft.	TOTAL $	UNIT PRICE $/Sq.Ft.	TOTAL $
1"x 1'-4" ftg.	72 L.F.	5.92	426.24	5.92	426.24
Wall Assembly	594	4.29	2548.26	3.18	1888.92
Sand Bottom	325	.25	81.00	.25	81.00
Liner	918	.25	229.50	.25	229.50
Insulated Top	324	3.59	1163.16	3.59	1163.16
TOTAL			4448.16		3788.82
Cost/Ft.			1.78		1.52

3000 Cu.Ft. Tank		TYPE-5 Concrete		TYPE-6 Masonry	
ITEM	AREA Per Sq.Ft.	UNIT PRICE $/Sq.Ft.	TOTAL $	UNIT PRICE $/Sq.Ft.	TOTAL $
1"x 1'-4" ftg.	78 L.F.	5.92	461.76	5.92	461.76
Wall Assembly	644	4.29	2762.26	3.18	2047.92
Sand Bottom	380	.25	95.00	.25	95.00
Liner	1024	.25	256.00	.25	256.00
Insulated Top	380	3.59	1364.20	3.59	1364.20
TOTAL			4939.22		4224.88
Cost/Ft.^{3}			1.65		1.41

COST COMPARISONS

FREE STANDING TANK

500 Cu.Ft. Tank		TYPE-7 Wood Frame		TYPE-8 Wood Frame	
ITEM	AREA Per Sq.Ft.	UNIT PRICE $/Sq.Ft.	TOTAL $	UNIT PRICE $/Sq.Ft.	TOTAL $
6" Slab	64	2.33	149.12	2.33	149.12
Wall Assembly	256	3.58	916.48	4.24	1085.44
Liner	320	.25	80.00	.25	80.00
Insulated Top	64	2.41	154.24	3.07	196.48
TOTAL			1299.84		1511.04
Cost/Ft.^{3}			2.60		3.02

1000 Cu.Ft. Tank		TYPE-7 Wood Frame		TYPE-8 Wood Frame	
ITEM	AREA Per Sq.Ft.	UNIT PRICE $/Sq.Ft.	TOTAL $	UNIT PRICE $/Sq.Ft.	TOTAL $
6" Slab	132	2.33	307.56	2.33	307.56
Wall Assembly	368	3.58	1317.44	4.24	1560.32
Liner	500	.25	125.00	.25	125.00
Insulated Top	132	2.41	318.12	3.07	405.24
TOTAL			2068.22		2398.12
Cost/Ft.^{3}			2.07		2.40

COST COMPARISONS

FREE STANDING TANK

1500 Cu.Ft. Tank		TYPE-7 Wood Frame		TYPE-8 Wood Frame	
ITEM	AREA Per Sq.Ft.	UNIT PRICE $/Sq.Ft.	TOTAL $	UNIT PRICE $/Sq.Ft.	TOTAL $
6" Slab	195	2.33	454.35	2.33	454.35
Wall Assembly	448	3.58	1603.84	4.24	1899.52
Liner	643	.25	160.75	.25	160.75
Insulated Top	195	2.41	469.95	3.07	598.65
TOTAL			2688.89		3113.27
Cost/Ft.^{3}			1.79		2.08

2000 Cu.Ft. Tank		TYPE-7 Wood Frame		TYPE-8 Wood Frame	
ITEM	AREA Per Sq.Ft.	UNIT PRICE $/Sq.Ft.	TOTAL $	UNIT PRICE $/Sq.Ft.	TOTAL $
1"x 1'-4" Ftg.	641	5.92	378.77	5.92	378.88
Wall Assembly	528	3.58	1890.24	4.24	2238.72
Sand Bottom	256	.25	64.00	.25	64.00
Liner	784	.25	196.00	.25	196.00
Insulated Top	256	2.41	616.96	3.07	785.92
TOTAL			3145.97		3663.52
Cost/Ft.^{3}			1.57		1.83

COST COMPARISONS

FREE STANDING TANK

2500 Cu.Ft. Tank		TYPE-7 Wood Frame		TYPE-8 Wood Frame	
ITEM	AREA Per Sq.Ft.	UNIT PRICE $/Sq.Ft.	TOTAL $	UNIT PRICE $/Sq.Ft.	TOTAL $
1"x 1'-4" ftg.	721	5.92	426.24	5.92	426.24
Wall Assembly	594	3.58	2126.52	4.24	2518.56
Sand Bottom	324	.25	81.00	.25	81.00
Liner	918	.25	229.50	.25	229.50
Insulated Top	324	2.41	780.84	3.07	994.68
TOTAL			3644.10		4249.98
Cost/Ft.^{3}			1.46		1.70

3000 Cu.Ft. Tank		TYPE-7 Wood Frame		TYPE-8 Wood Frame	
ITEM	AREA Per Sq.Ft.	UNIT PRICE $/Sq.Ft.	TOTAL $	UNIT PRICE $/Sq.Ft.	TOTAL $
1"x 1'-4" ftg.	781	5.92	461.76	5.92	461.76
Wall Assembly	644	3.58	2305.52	4.24	2730.56
Sand Bottom	380	.25	95.00	.25	95.00
Liner	1024	.25	256.00	.25	256.00
Insulated Top	380	2.41	915.80	3.07	1166.60
TOTAL			4034.08		4709.92
Cost/Ft.^{3}			1.35		1.57

COST COMPARISONS

FREE STANDING TANK

500 Cu.Ft. Tank		TYPE-9 Cement Coat		TYPE-10 Polystyrene Plank	
ITEM	AREA Per Sq.Ft.	UNIT PRICE $/Sq.Ft.	TOTAL $	UNIT PRICE $/Sq.Ft.	TOTAL $
6" Slab	64	2.33	149.12	2.33	149.12
Wall Assembly	226	2.90	655.40	3.09	698.34
Liner	290	.25	72.50	.25	72.50
Insulated Top	64	3.59	229.76	3.07	196.48
TOTAL			1106.78		1116.44
Cost/Ft.^{3}			2.21		2.23

1000 Cu.Ft. Tank		TYPE-9 Cement Coat		TYPE-10 Polystyrene Plank	
ITEM	AREA Per Sq.Ft.	UNIT PRICE $/Sq.Ft.	TOTAL $	UNIT PRICE $/Sq.Ft.	TOTAL $
6" Slab	113	2.33	263.29	2.33	263.29
Wall Assembly	302	2.90	875.80	3.09	933.18
Liner	414	.25	103.50	.25	103.50
Insulated Top	113	3.59	405.67	3.07	346.91
TOTAL			1648.26		1646.88
Cost/Ft.^{3}			1.65		1.65

COST COMPARISONS

FREE STANDING TANK

1500 Cu.Ft. Tank		TYPE-9 Cement Coat		TYPE-10 Polystyrene Plank	
ITEM	AREA Per Sq.Ft.	UNIT PRICE $/Sq.Ft.	TOTAL $	UNIT PRICE $/Sq.Ft.	TOTAL $
6" Slab	177	2.33	412.41	2.33	412.41
Wall Assembly	377	2.90	1093.30	3.09	1164.93
Liner	554	.25	138.50	.25	138.50
Insulated Top	177	3.59	635.43	3.07	543.39
TOTAL			2279.64		2259.23
Cost/Ft.^{3}			1.52		1.50

2000 Cu.Ft. Tank		TYPE-9 Cement Coat		TYPE-10 Polystyrene Plank	
ITEM	AREA Per Sq.Ft.	UNIT PRICE $/Sq.Ft.	TOTAL $	UNIT PRICE $/Sq.Ft.	TOTAL $
1" x 1'-4" ftg.	57 L.F.	5.92	337.44	5.92	337.44
Wall Assembly	466	2.90	1351.40	3.09	1439.94
Sand Bottom	254	.25	63.50	.25	63.50
Liner	720	.25	180.00	.25	180.00
Insulated Top	254	3.59	911.86	3.07	779.78
TOTAL			2844.20		2800.66
Cost/Ft.^{3}			1.42		1.40

COST COMPARISONS

FREE STANDING TANK

2500 Cu.Ft. Tank		TYPE-9 Cement Coat		TYPE-10 Polystyrene Plank	
ITEM	AREA PER SQ.FT.	UNIT PRICE $/SQ.FT.	TOTAL $	UNIT PRICE $/SQ.FT.	TOTAL $
1'x 1"-4" Ftg.	63 L.F.	5.92	372.96	5.92	372.96
Wall Assembly	518	2.90	1502.20	3.09	1600.62
Sand Bottom	314	.25	78.50	.25	78.50
Liner	832	.25	208.00	.25	208.00
Insulated Top	314	3.59	1127.26	3.07	963.98
TOTAL			3288.92		3224.06
Cost/Ft.^{3}			1.32		1.29

3000 Cu.Ft. Tank		TYPE-9 Cement Coat		TYPE-10 Polystyrene Plank	
ITEM	AREA PER SQ.FT.	UNIT PRICE $/SQ.FT.	TOTAL $	UNIT PRICE $/SQ.FT.	TOTAL $
1"x 1'-4" Ftg.	69 L.F.	5.92	408.48	5.92	408.48
Wall Assembly	570	2.90	1653.00	3.09	1761.30
Sand Bottom	380	.25	95.00	.25	95.00
Liner	950	.25	237.50	.25	237.50
Insulated Top	380	3.59	1364.20	3.07	1166.60
TOTAL			3758.18		3668.88
Cost/Ft.^{3}			1.25		1.22

COST COMPARISONS

FREE STANDING TANK

500 Cu.Ft. Tank — Type-11 Foam-Form

ITEM	AREA PER SQ.FT.	UNIT PRICE $/SQ.FT.	TOTAL $
6" Slab	64	2.33	149.12
Wall Assembly	256	2.11	540.16
Liner	320	.25	80.00
Insulated Top	64	3.59	229.76
TOTAL			999.04
Cost/Ft.^{3}			2.00

1000 Cu.Ft. Tank — Type-11 Foam-Form

ITEM	AREA PER SQ.FT.	UNIT PRICE $/SQ.FT.	TOTAL $
6" Slab	132	2.33	307.56
Wall Assembly	368	2.11	776.48
Liner	500	.25	125.00
Insulated Top	132	3.59	473.88
TOTAL			1682.92
Cost/Ft.^{3}			1.68

COST COMPARISONS

FREE STANDING TANK

1500 Cu.Ft. Tank		TYPE-11 Foam-Form	
ITEM	AREA Per Sq.Ft.	UNIT PRICE $/Sq.Ft.	TOTAL $
6" Slab	195	2.33	454.35
Wall Assembly	448	2.11	945.28
Liner	643	.25	160.75
Insulated Top	195	3.59	700.05
TOTAL			2260.43
Cost/Ft.^{3}			1.51

2000 Cu.Ft. Tank		TYPE-11 Foam-Form	
ITEM	AREA Per Sq.Ft.	UNIT PRICE $/Sq.Ft.	TOTAL $
1"x 1'-4" Ftg.	64	5.92	378.88
Wall Assembly	528	2.11	1114.08
Sand Bottom	256	.25	64.00
Liner	784	.25	196.00
Insulated Top	256	3.59	919.04
TOTAL			2672.00
Cost/Ft.^{3}			1.34

COST COMPARISONS

FREE STANDING TANK

2500 Cu.Ft. Tank — TYPE-11A Foam-Form Block

ITEM	AREA PER SQ.FT.	UNIT PRICE $/SQ.FT.	TOTAL $
1"x 1'-4" Ftg.	72 L.F.	5.92	426.24
Wall Assembly	594	2.11	1253.34
Sand Bottom	324	.25	81.00
Liner	918	.25	229.50
Insulated Top	324	3.59	1163.16
TOTAL			3153.24
Cost/Ft.^{3}			1.26

3000 Cu.Ft. Tank — TYPE-11A Foam-Form Block

ITEM	AREA PER SQ.FT.	UNIT PRICE $/SQ.FT.	TOTAL $
1"x 1'-4" Ftg.	78 L.F.	5.92	461.76
Wall Assembly	644	2.11	1358.84
Sand Bottom	380	.25	95.00
Liner	1024	.25	256.00
Insulated Top	380	3.59	1364.20
TOTAL			3535.80
Cost/Ft.^{3}			1.18

COMPARISON OF MULTIPLE VS. SINGLE TANKS

PRECAST CONC. CYLINDRICAL TYPE-2	CAST-IN-PLACE RECTANGULAR TYPE-5
3 - 500 CU.FT. @ $ 977 = $2,931.00 ÷ 1,500 = $ 1.95	1 - 1,500 CU.FT. @ $3,237.00 ÷ 1,500 = $ 2.16
2 - 1,000 CU.FT. @ $ 1,453 = $2,906.00 ÷ 2,000 = $ 1.45	1 - 2,000 CU.FT. @ $3,823.00 ÷ 2,000 = $ 1.91
3 - 1,000 CU.FT. @ $ 1,453 = $4,359.00 ÷ 3,000 = $ 1.45	1 - 3,000 CU.FT. @ $4,940.00 ÷ 3,000 = $ 1.65

PRECAST CONC. RECTANGULAR TYPE-3	CAST-IN-PLACE RECTANGULAR TYPE-5
3 - 500 CU.FT. @ $ 1,371 = $4,113.00 ÷ 1,500 = $2.74	1 - 1,500 CU.FT. @ $3,237.00 ÷ 1,500 = $ 2.16
2 - 1,000 CU.FT. @ $2,235 = $4,470.00 ÷ 2,000 = $2.24	1 - 2,000 CU.FT. @ $3,823.00 ÷ 2,000 = $ 1.91

COMPARATIVE COST SUMMARY

(FREE STANDING TANK) $ PER CU. FT.

TANK SIZE, ft^3	500	1,000	1,500	2,000	2,500	3,000
WOOD STAVE	7.29	7.23	6.86	6.05	5.57	5.16
WELDED STEEL	4.59	4.02	3.50	2.99	2.64	3.31
CORRUG., STL. PIPE (CYL.)	3.95	2.41	-	-	-	-
FIBERGLASS REINF. PLAS.	3.87	3.19	-	-	-	-
CAST-IN PLACE CONC.	3.11	2.49	2.16	1.91	1.78	1.65
WOOD FRAME (POLYSTYRENE INSULATION)	3.02	2.40	2.08	1.83	1.70	1.57
PRECAST CONC. (RECT.)	2.74	2.24	-	-	-	-
WOOD FRAME (FIBERGLASS INSULATION)	2.60	2.07	1.79	1.57	1.46	1.35
MASONRY	2.55	2.08	1.83	1.62	1.52	1.41
CEMENT COAT	2.21	1.65	1.52	1.42	1.32	1.25
POLYSTYRENE PLANK	2.23	1.65	1.50	1.40	1.29	1.21
FOAM FORM	2.00	1.68	1.51	1.34	1.26	1.18
PRECAST CONC. (CYL.)	1.95	1.45	-	-	-	-

COMPARATIVE COST SUMMARY

(FREE STANDING TANK) TOTAL DOLLARS

TANK SIZE, ft^3	500	1,000	1,500	2,000	2,500	3,000
WOOD STAVE	3,646	7,227	10,290	12,100	13,912	15,486
WELDED STEEL	2,294	4,002	5,244	5,919	6,594	9,936
CORRUG., STL. PIPE (CYL.)	1,976	2,409	-	-	-	-
FIBERGLASS REINF. PLAS.	1,933	3,186	-	-	-	-
CAST-IN PLACE CONC.	1,557	2,485	3,237	3,823	4,448	4,940
WOOD FRAME (POLYSTYRENE INSULATION)	1,511	2,398	3,113	3,663	4,250	4,710
PRECAST CONC. (RECT.)	1,371	2,235	-	-	-	-
WOOD FRAME (FIBERGLASS INSULATION)	1,300	2,068	2,689	3,146	3,644	4,035
MASONRY	1,272	2,077	-	3,237	3,789	4,225
CEMENT COAT	1,107	1,648	2,280	2,844	3,289	3,758
POLYSTYRENE PLANK	1,116	1,647	-	2,801	3,224	3,668
FOAM FORM	999	1,683	-	2,672	3,153	3,536
PRECAST CONC. (CYL.)	977	1,453	-	-	-	-

COMPARATIVE COST

$ PER CU.FT.

FREE-STANDING TANK

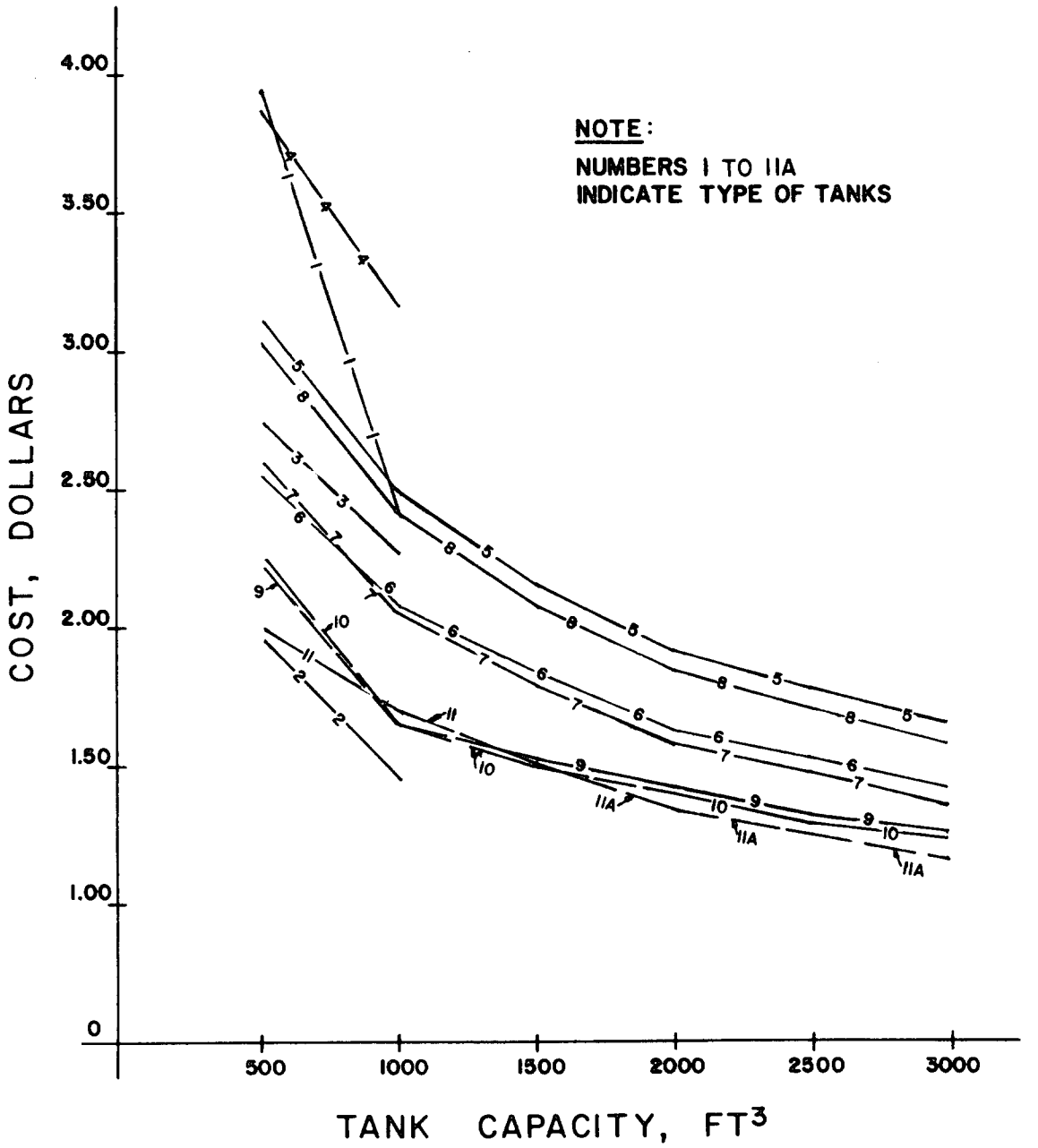

COMPARATIVE COST SUMMARY

(INTEGRATED TANK) TOTAL DOLLARS

TANK SIZE, ft^3	500	1,000	1,500	2,000	2,500	3,000
CAST IN PLACE CONCRETE	899	1,429	1,853	1,928	2,228	2,432
MASONRY	756	1,226	1,604	1,636	1,878	2,064
FOAM FORM	542	904	1,212	1,173	1,358	1,512

COMPARATIVE COST SUMMARY

(INTEGRATED TANK)

$ PER CU. FT.

TANK SIZE, ft^3	500	1,000	1,500	2,000	2,500	3,000
CAST IN PLACE CONCRETE	1.80	1.43	1.23	.96	.89	.81
MASONRY	1.51	1.23	1.07	.82	.75	.69
FOAM FORM	1.08	.90	.81	.59	.54	.50

COMPARATIVE COST

$ PER CU. FT.

INTEGRATED TANK STRUCTURE

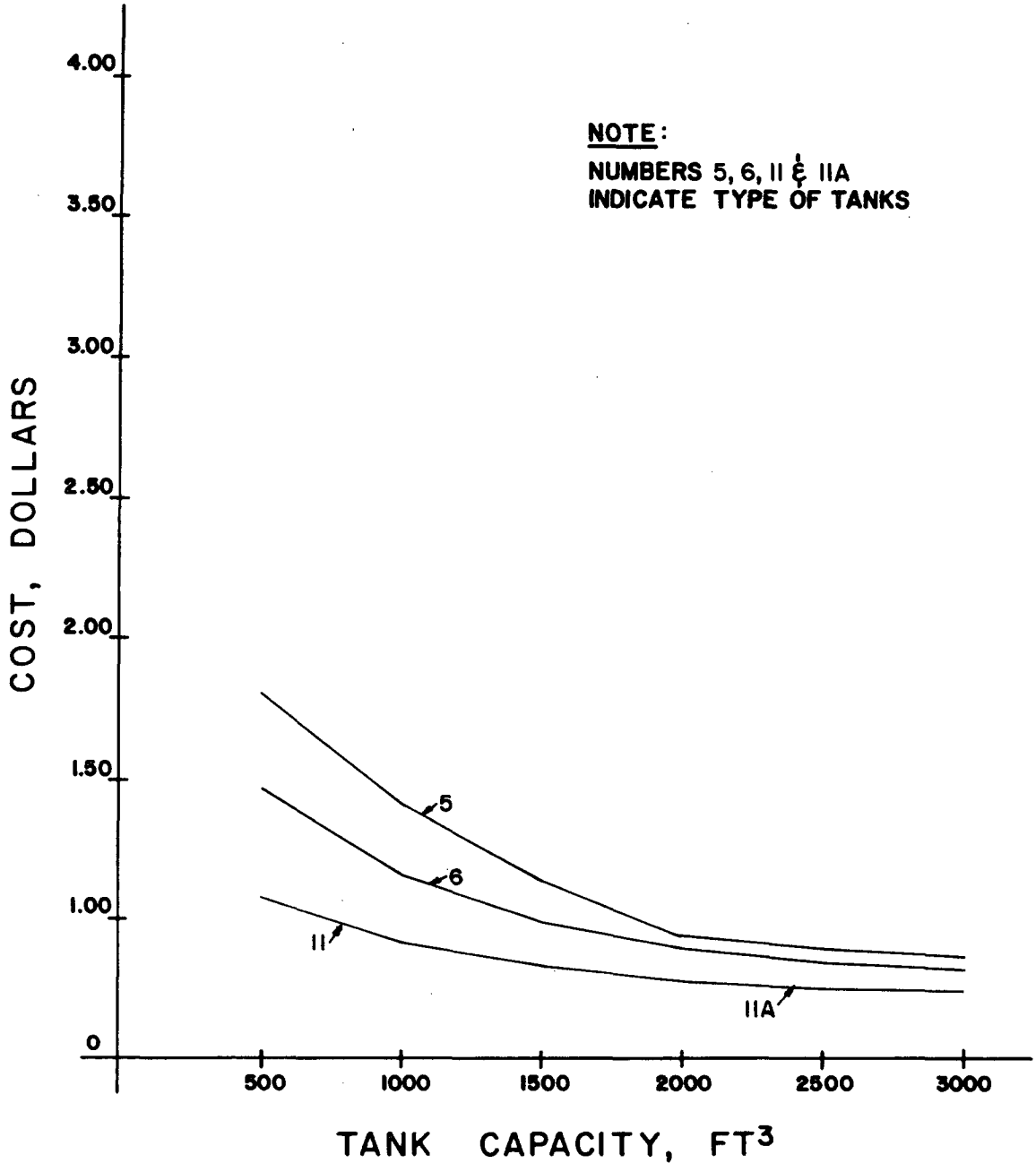

SECTION V. APPENDICES

A. ORNL Manufacturer Research

B. Respondents to OIGC Inquiry

C. Cost Adjustment Factors

APPENDIX A

ORNL MANUFACTURER RESEARCH SUMMARY

Precast Concrete Tanks (Site-Erected)

C&B Silo Co.
Charlotte, Michigan

This product system is designed for liquid measure storage for dairy farming. Smallest size available is 36,000 gal. (4800 cu.ft.) at an installed price of slightly above $1.00/cu.ft. System consists of cast-in-place floor slab, precast side panels and roof planks.

Cast-In-Place Concrete Tanks

Foam-Form Canada, Ltd.
Scarborough, Ontario

This product system is a modular forming unit for cast-in-place concrete. Consisting of tongue and groove edged polystyrene faces with an open cavity, the system offers integral insulation of a cast-in-place concrete "waffle" wall. This system was used in construction of the ACES test house in Knoxville Tennessee.

Steel Tanks (Site-Erected)

Clayton & Lambert Mfg. Co.
Buckner, Kentucky

This product system is a site erected steel panel design in which preformed 12 ga. steel units are bolted together atop a cast-in-place concrete ring foundation. Some preliminary

design work for the ACES system was done indicating a cost effective tank may be practicable in volumes greater than 1500 cu.ft.

Wood Tanks (Site-Erected)

American Plywood Assoc.
Tacoma, Washington

This design is plywood sheathing on wood studs with blanket insulation is the basis for the construction of the ACES test house in Richmond Virginia.

Precast Concrete Tanks (Prefabricated)

American Solarize Co.
Princeton, New Jersey

This thermal storage vault, constructed on lightweight insulating concrete is designed for heat storage in a solar energy system.

Plastic Form Domes (Site-Erected)

Spirex Structures Inc.
Warren, Michigan

This product system is a site-erected, polystyrene board vault roof form which becomes integral with a reinforced cement mortar shell. Designed for large scale roof spans, the construction concept is applicable to thermal storage tanks for the ACES.

APPENDIX B

RESPONDENTS TO OIGC INQUIRY

Literature, approximate price quotations, and general information regarding OIGC inquiry about storage tanks were received from the following:

Buffalo Tank Division
Bethlehem Steel Corporation
STEEL TANKS

Harold E. Ingalls Associates, Inc.
Tillotson-Pearson Inc.
FIBERGLASS REINFORCED PLASTIC PRODUCTS

Rocky Mountain Foam-Form Inc.
POLYSTYRENE CONCRETE FORMING SYSTEM

Lipp Spiral Systems Co.
FIELD ERECTED SHEET STEEL & ALUMINUM TANKS

Slaughter Industries Inc.
E-Z ROLL FLAT FORMS FOR ROUND CONTAINERS

Metal Products Division
Armco Steel Corporation
CORRUGATED STEEL PIPE

Rosenwach Tank Co., Inc.
WOOD STAVE STORAGE TANKS

Construction Products Division
Sonoco Products Co.
MULTI-USE CYLINDRICAL STEEL FORMS

An-cor Industrial Plastics, Inc.
FIBERGLASS REINFORCED PLASTIC PRODUCTS

Extrudyne Corp.,Inc.
DESIGN & MANUFACTURE OF EXTRUDED PLASTIC PRODUCTS

Barberton Plastic Products Inc.
POLYETHYLENE PLASTIC PRODUCTS

Carbro Industries
PRECAST CONCRETE PRODUCTS

Alton Building Products
Alton Box Board Co.
PAPER PRODUCTS

County Plastics Corp.
POLYETHYLENE PLASTIC PRODUCTS

Mershon Concrete Products
PRECAST CONCRETE SEPTIC TANKS

APPENDIX C

COST ADJUSTMENT FACTORS

The cost estimates in this report are based on national averages and an adjustment is necessary to reflect variations in labor and materials for various geographic locations. For this purpose six geographic areas which roughly correspond to climatic zones have been selected. Emphasis is placed upon the essential structure of the tank which represents the major cost items i.e.; wood, concrete and masonry. The figures noted below are percentage adjustment factors for the total costs used in the estimate.

LOCATION	WOOD	CONCRETE	MASONRY
North Central	105.2	100.5	103.8
South Central	95.7	95.5	93.1
Northwest	97.6	104.6	109.1
Southwest	102.3	102.2	104.2
Northeast	104.1	102.0	101.7
Southeast	95.2	95.1	88.1