ornl

OAK
RIDGE
NATIONAL
LABORATORY

UNION
CARBIDE

ORNL/Sub-7800/1

DEVELOPMENT OF CONCEPTS FOR LOW-COST ENERGY STORAGE ASSEMBLIES FOR ANNUAL CYCLE ENERGY SYSTEM APPLICATIONS

SUMMARY REPORT

BATTELLE COLUMBUS LABORATORIES
505 KING AVENUE
COLUMBUS, OHIO 43201

OPERATED BY
UNION CARBIDE CORPORATION
FOR THE UNITED STATES
DEPARTMENT OF ENERGY

Office of Buildings and Community Systems

Printed in the United States of America. Available from
National Technical Information Service
U.S. Department of Commerce
5285 Port Royal Road, Springfield, Virginia 22161
NTIS price codes—Printed Copy: A10 Microfiche A01

This report was prepared as an account of work sponsored by an agency of the United States Government. Neither the United States Government nor any agency thereof, nor any of their employees, makes any warranty, express or implied, or assumes any legal liability or responsibility for the accuracy, completeness, or usefulness of any information, apparatus, product, or process disclosed, or represents that its use would not infringe privately owned rights. Reference herein to any specific commercial product, process, or service by trade name, trademark, manufacturer, or otherwise, does not necessarily constitute or imply its endorsement, recommendation, or favoring by the United States Government or any agency thereof. The views and opinions of authors expressed herein do not necessarily state or reflect those of the United States Government or any agency thereof.

ORNL/Sub-7800/1

DEVELOPMENT OF CONCEPTS FOR LOW-COST ENERGY STORAGE ASSEMBLIES FOR ANNUAL CYCLE ENERGY SYSTEM APPLICATIONS

Summary Report

G. H. Alexander, D. L. Cooper,
C. A. Cummings, and E. E. Reiber

Date Published: October 1981

Report Prepared by
BATTELLE COLUMBUS LABORATORIES
505 King Avenue
Columbus, Ohio 43201
Under Subcontract Number 7800

for

OAK RIDGE NATIONAL LABORATORY
Oak Ridge, Tennessee 37830
operated by
UNION CARBIDE CORPORATION
for the
U.S. DEPARTMENT OF ENERGY
Contract No. W-7405-eng-26

RELATED REPORTS IN THIS SERIES

1. H. C. Fischer et al., *Summary of Annual Cycle Energy System Work-Shop I*, held Oct. 29-30, 1975, Oak Ridge, Tenn., ORNL/TM-5243, Oak Ridge National Laboratory, Oak Ridge, Tenn., July 1976.

2. J. C. Moyers et al., *Design Report for the ACES Demonstration House*, ORNL/CON-1, Oak Ridge National Laboratory, Oak Ridge, Tenn., October 1976.

3. E. A. Nephew et al., *The Annual Cycle Energy System: Initial Investigations*, ORNL/TM-5525, Oak Ridge National Laboratory, Oak Ridge, Tenn., October 1976.

4. I. G. Cantor, *Investigation of Alternate Types of Water Storage Components to be Utilized in Conjunction with the ACES System*, ORNL/Sub-78/14233/1, Oak Ridge National Laboratory, Oak Ridge, Tenn., December 1977.

5. E. C. Hise, *Performance Report for the ACES Demonstration House, August 1976 through August 1977*, ORNL/CON-19, Oak Ridge National Laboratory, Oak Ridge, Tenn., March 1978.

6. H. C. Fischer, *Development and Testing of a Single-Plate and a Two-Plate Ice-Maker Heat Pump*, ORNL/CON-21, Oak Ridge National Laboratory, Oak Ridge, Tenn., April 1978.

7. V. D. Baxter, *Intermediate Report on the Performance of Plate-Type Ice-Maker Heat Pumps*, ORNL/CON-23, Oak Ridge National Laboratory, Oak Ridge, Tenn., October 1978.

8. A. S. Holman and V. R. Brantley, *ACES Demonstration: Construction, Startup, and Performance Report*, ORNL/CON-26, Oak Ridge National Laboratory, Oak Ridge, Tenn., October 1978.

9. A. S. Holman et al., *Annual Cycle Energy System (ACES) Performance Report, November 1977 through September 1978*, ORNL/CON-42, Oak Ridge National Laboratory, Oak Ridge, Tenn., May 1980.

10. E. A. Nephew, L. A. Abbatiello, and M. L. Ballou, *Theory and Design of an Annual Cycle Energy System (ACES) for Residences*, ORNL/CON-43, Oak Ridge National Laboratory, Oak Ridge, Tenn., May 1980.

11. R. E. Minturn et al., *ACES 1979: Capabilities and Potential*, ORNL/CON-48, Oak Ridge National Laboratory, Oak Ridge, Tenn., May 1980.

12. J. W. MacArthur, *Economic Analysis of Annual Cycle Energy Systems*, ORNL/Sub-7470/V1, V2, V3, Energy Resources Center, Honeywell, Inc., Minneapolis, Minn., May 1980.

13. M. L. Ballou et al., *MAD: A Computer Program for ACES Design Using Monthly Thermal Loads*, ORNL/CON-51, Oak Ridge National Laboratory, Oak Ridge, Tenn., March 1981.

14. L. A. Abbatiello et al., *Performance and Economics of the ACES and Alternative Residential Heating and Air Conditioning Systems in 115 U.S. Cities*, ORNL/CON-52, Oak Ridge National Laboratory, Oak Ridge, Tenn., March 1981.

15. V. D. Baxter et al., *Final ACES Performance Report, September 1978 through September 1980*, ORNL/CON-64, Oak Ridge National Laboratory, Oak Ridge, Tenn., April 1981.

16. J. L. Bledsoe and D. L. Miller, *Data Collection and Processing for the ACES*, ORNL/CON-59, Oak Ridge National Laboratory, Oak Ridge, Tenn., August 1981.

TABLE OF CONTENTS

	Page
INTRODUCTION	1
OBJECTIVES	2
Phase I Objective	2
Phase II Objective	2
SUMMARY - PHASE I	3
1. Concept ORNLFF	3
2. Concept RSVR	4
3. Concept SWPL	4
4. Concept PLYSS	4
5. Concept CONCYL	5
6. Concept UTLBX	5
Other, Rejected Concepts	5
Cost Ranking	7
Estimated Costs	9
Technical Performance Considerations	9
Contacted Manufacturers and Commercial Interests	14
CONCLUSIONS	15
RESEARCH APPROACH	16
Literature Search and Preliminary Calculations	16
Origination of Concepts	16
Screening of Concepts	17
Preliminary Design Analysis of Concepts	17
Preliminary Estimation of Cost for Each Concept	18
Cost Ranking of Concepts	19

TABLE OF CONTENTS
(Continued)

	Page
GENERAL COST COMPARISONS	20
Insulation	20
Heat Exchanger	22
Structures	23
SIX STORAGE ASSEMBLY CONCEPTS, DESCRIPTIONS, AND COMMENTS	24
Concept ORNLFF	24
Concept RSVR	27
Concept SWPL	30
Concept PLYSS	32
Concept CONCYL	34
Concept UTLBX	37
SUMMARY - PHASE II	41
Designs	41
Costs	41
Performance	43
CONCLUSIONS - PHASE II	46
RECOMMENDATIONS - PHASE II	47
RESEARCH APPROACH	48
Identification of Preferred Concepts	48
Detailed Analysis of Concepts	48
Identification of Potential Suppliers	49
Preparation of Drawings and Instructions	49
Cost Estimation	49

TABLE OF CONTENTS
(Continued)

	Page
DISCUSSION OF CONCEPTS AS DESIGNED FOR PHASE II	50
General Design Characteristics	50
Heat Rate	51
Durability	51
Corrosion	52
Degradation	52
Structural Strengths	53
Heat Exchanger	54
Basic Heat Transfer Characteristics	54
Tube Material Comparisons	58
Tube Strength Under Buoyancy Loads	64
Implementation of Design Equations	68
Concept ORNLFF	71
Phase II Design Features	71
Manufacturing Methods	76
Installation Methods	76
Cost Factors	77
Capable Suppliers and Installers	77
Concept SWPL	79
Phase II Design Features	79
Manufacturing Methods	86
Installation Methods	86
Cost Factors	86
Capable Suppliers and Installers	88

TABLE OF CONTENTS
(Continued)

Page

Concept UTLBX 88

Phase II Design Features 92

Manufacturing Methods. 96

Installation Methods 96

Cost Factors 97

Capable Suppliers and Installers 97

APPENDIX A

PRELIMINARY DESIGN AND PRELIMINARY COST ESTIMATES FOR SIX ACES ENERGY STORAGE ASSEMBLIES OF THREE BASIC SIZES A-1

APPENDIX B

LISTING OF MANUFACTURERS, COMMERCIAL INTERESTS, AND ASSOCIATIONS WHICH PROVIDED PHASE I INFORMATION B-1

APPENDIX C

COST ESTIMATES FOR THE ENERGY STORAGE ASSEMBLY DESIGNS OF PHASE II C-1

APPENDIX D

INSTALLATION PROCEDURES FOR THE ENERGY STORAGE ASSEMBLY DESIGNS OF PHASE II. D-1

APPENDIX E

LISTING OF POTENTIAL SOURCES FOR MATERIALS, COMPONENTS, ASSEMBLIES AND SERVICES FOR THE ACES ENERGY STORAGE ASSEMBLY CONCEPTS OF PHASE II E-1

LIST OF TABLES

		Page
Table 1.	Comparative Cost Ranking of Concepts for ACES Energy Storage Assemblies	8
Table 2.	Estimated Overall Costs of Concepts for ACES Energy Storage Assemblies	10
Table 3.	Basic Performance Parameters of Concepts for ACES Energy Storage Assemblies, As Configured for Phase I Evaluations	12
Table 4.	General Cost Comparison of Common Insulations	20
Table 5.	Thermal Conductivity of Common Pipe Materials Compared to That of Ice	22
Table 6.	Estimates of Total Cost and Unit Costs for Three Concepts as Designed in Phase II, for 4 Tank Sizes	42
Table 7.	Properties of Common Plastic Pipe Materials	59
Table 8.	Significant Cost Contributors, ORNLFF Concept	78
Table 9.	Significant Cost Contributors, SWPL Concept	87
Table 10.	Significant Cost Contributors, UTLBX Concept	98
Table A-1.	Preliminary Design of Concept ORNLFF	A-1
Table A-2.	Preliminary Cost Estimate of Concept ORNLFF	A-2
Table A-3.	Preliminary Design of Concept RSVR	A-7
Table A-4.	Preliminary Cost Estimate of Concept RSVR	A-8
Table A-5.	Preliminary Design of Concept SWPL	A-12
Table A-6.	Preliminary Cost Estimate of Concept SWPL	A-13
Table A-7.	Preliminary Design of Concept PLYSS	A-16
Table A-8.	Preliminary Cost Estimate of Concept PLYSS	A-17
Table A-9.	Preliminary Design of Concept CONCYL	A-20
Table A-10.	Preliminary Cost Estimate of Concept CONCYL	A-22
Table A-11.	Preliminary Design of Concept UTLBX	A-24
Table A-12.	Preliminary Cost Estimate of Concept UTLBX	A-25

LIST OF TABLES
(Continued)

		Page
Table C-1.	Cost Estimate of Concept ORNLFF	C-1
Table C-2.	Cost Estimate of Concept SWPL	C-5
Table C-3.	Cost Estimate of Concept UTLBX	C-9

LIST OF FIGURES

Figure 1.	Unit Volume Cost of Six Tank Concepts, for Maximum Integration With a Building	11
Figure 2.	Basic Arrangement, Concept ORNLFF	25
Figure 3.	Basic Arrangement, Concept RSVR	28
Figure 4.	Basic Arrangement, Concept SWPL	31
Figure 5.	Basic Arrangement, Concept PLYSS	33
Figure 6.	Basic Arrangement, Concept CONCYL	35
Figure 7A.	Basic Prefabricated Sections, Concept UTLBX	38
Figure 7B.	Three Specific Size Tanks Made From Basic Prefabricated Sections, Concept UTLBX	39
Figure 8.	Unit Volume Costs of 3 Tank Concepts, Free-Standing, 60,000 Btu Per Hour Heat Rate	44
Figure 9.	Unit Volume Costs of 3 Tank Concepts, Free-Standing, 18,000 Btu Per Hour Heat Rate	45
Figure 10.	Relationship of Heat Transfer Rate, Tank Volume, and Heat Exchanger Tube Length - PVC Tube	61
Figure 11.	Relationship of Heat Transfer Rate, Tank Volume, and Heat Exchanger Tube Length - Polyethylene Tube	62
Figure 12.	Relationship of Heat Transfer Rate, Tank Volume, and Heat Exchanger Tube Length - ABS Tube	63
Figure 13.	Tube Length Required for Various Heat Rates at 78 Percent Ice Inventory - PVC Tube	65
Figure 14.	Locations of Precast Utility Vault Manufacturing Sites, Relative to Regions of Full ACES Applicability	99

FOREWORD

The Annual Cycle Energy System (ACES) has been under development by the U.S. Department of Energy and its predecessors since early 1975. The ACES provides space heating and cooling and domestic hot water to residential and commercial buildings at a substantial reduction in purchased energy as compared with alternative systems. It utilizes a unidirectional electrically driven heat pump to extract energy in the winter from a buried insulated tank of water and delivers that energy to provide space and water heating as needed. In the process, the water cools and slowly freezes so that, by winter's end, most of the water has been converted to ice. During the subsequent summer, the ice is slowly melted to provide air conditioning, the heat pump operating only when hot water is needed. ACES theory, operation, and economics have been documented in the series of reports listed on pp. iii and iv of this report.

Although the ACES has life-cycle costs competitive with alternative systems, its initial installed cost is appreciably higher. The major component of ACES that leads to high incremental first costs is the ice/water storage bin, which is an indispensible feature of the system. To ensure that all possible materials and designs which would give lower storage bin costs while retaining long life and reliability had been considered, the Battelle Columbus Laboratories were subcontracted to do the study reported in the following pages.

Robert E. Minturn
ACES Program Manager
Oak Ridge National Laboratory

ABSTRACT

The objective of this program at Battelle was to conceive and design ACES energy storage assemblies of low capital cost. In the search for low overall cost assemblies, many diverse concepts and materials were postulated and briefly evaluated. The concept envisioned by ORNL in the ORNL/CON-43 report was considered as a reference standard, and five Battelle concepts were judged to compare favorably and were chosen for the preliminary, Phase I development. Basic physical arrangements were formulated, from which costs and selected performance parameters were estimated.

Substantial capital cost savings were estimated to accrue if the energy storage assembly of certain concepts could be integrated with the structure of the served building.

Cost rankings, descriptions, and discussions of the concepts were presented in the Phase I Interim Report of this program, from which ORNL selected the following three concepts for the Phase II development:

1. A site-constructed tank with reinforced concrete walls formed with specialized modular blocks which eliminates most concrete form-work and provides integral R-20 insulation. (Designated ORNLFF)
2. A site-constructed tank with earth-supported walls that are formed from elements common to residential, in-ground swimming pools. (Designated SWPL)
3. A site-assembled tank which uses large, precast concrete sections similar to those used in underground utility vaults (Designated UTLBX)

Detailed designs of free-standing versions of the three concepts are presented in this report, along with estimates of cost and listings of potential suppliers of products and services.

The ORNLFF and SWPL concepts are estimated to be nearly equivalent in cost, while the UTLBX concept is estimated to be of considerably greater cost.

SUMMARY REPORT

on

DEVELOPMENT OF CONCEPTS FOR LOW-COST ENERGY STORAGE ASSEMBLIES FOR ANNUAL CYCLE ENERGY SYSTEM APPLICATIONS
(Ref.: RFP P1356)

to

UNION CARBIDE CORPORATION
Nuclear Division

from

BATTELLE
Columbus Division

May 11, 1981

INTRODUCTION

The Annual Cycle Energy System (ACES) is an energy-conserving system that provides space heating and cooling and domestic water heating for residences and small commercial installations. The ACES derives a large fraction of its energy conservation capability from an insulated tank for storing ice which is formed as a useful by-product of space and water heating, and which can then be used for air conditioning as needed. The requirement for a large storage volume leads to higher capital costs for ACES than for most heating, ventilating, and air conditioning (HVAC) systems. The purpose of the development program herein reported is to aggressively seek ways to minimize the cost of the installed storage facility. Although common, conventional construction elements are to be considered, no restraints are to be placed in the pursuit of low overall cost. Consideration is to be given to any unique combination of material, components, systems, or procedures offering potential for meeting the requirements of water containment, boundary insulation, and internal heat transfer while achieving low cost.

The storage tank itself must be water tight, and the assembly must be designed to have at least a 20-year life under ordinary conditions of use, including earth burial. Tank volumes must encompass the range

from 500 to 4000 cubic feet, and all tank surfaces must be insulated to R-40 or better. For design purposes, the required range of heat exchanger capacities (18 to 60 KBTU/hr) and the required range of tank sizes (500 to 4000 cu.ft. of water) are independent variables, resulting in a matrix of design combinations.

OBJECTIVES

The overall objective of this program is to produce a detailed design along with fabrication and installation specifications for low-cost energy storage assemblies for ACES applications.

The program is divided into two phases, each with clearly defined objective, deliverables, and schedule for performance. These two phases are:

- Phase I - Preliminary Evaluation of Alternative Concepts
- Phase II - Detailed Design of Low-Cost ACES Storage Tank Assemblies.

Phase I Objective

The objective of Phase I is to select and rank low-cost storage tank assembly concepts suitable for ACES applications. The ranking is to be based on analysis and evaluation of both known tank designs and unique design concepts originated in this study.

Phase II Objective

The objective of Phase II is to develop designs of selected low cost concepts with sufficient detail to allow interested manufacturers and contractors to make cost estimates for (1) one or more prototype assemblies and (2) greater production quantities of components and assemblies.

This summary report presents the results of Phase I and Phase II investigations and detailed designs of the three concepts selected by ORNL.

SUMMARY - PHASE I

The Phase 1 preliminary evaluation has resulted in the identification of five candidate concepts for energy storage assemblies, in addition to the reference candidate proposed by ORNL in report ORNL/CON-43. These five concepts are briefly described below, where they are assigned descriptor labels for reference purposes. More extensive descriptions of fabrication details and bases for cost estimates are included in this report and its appendices.

Although alternative materials were examined, extruded round plastic pipe appears to be the most desirable material for the heat exchanger, as already suggested in the ORNL concept. Extruded plastic pipe is incorporated in all the candidate concepts evaluated herein.

1. Concept ORNLFF

Concept ORNLFF is the reference concept of report ORNL/CON-43. It consists of an in-ground tank that is constructed on-site by placing interlocking blocks* of plastic foam on sub-grade footings. Communicating passages in the blocks are filled with steel-reinforced concrete to unify and strengthen the structure. Additional insulation of plastic foam is placed against the interior walls and on a gravel base to form a floor, followed by installation of a fitted plastic membrane liner for watertightness. A concrete ballast is then formed on the bottom within the liner with buoyancy attachment features for the heat exchanger. A serpentine-shaped heat exchanger, fabricated from round plastic pipe, is fastened to the attachment features on the bottom of the water tank. An insulated deck lid completes the assembly (see Figure 2).

---

* Foam-Form Canada, Limited.

2. Concept RSVR

Concept RSVR is a reservoir-shaped, in-ground tank, constructed at the site. A contoured cavity in the earth is lined with plastic foam insulation in which a fitted membrane liner is placed. Beneath the tank floor is a concrete ballast to hold buoyancy attachment features, which penetrate the liner and the insulation. A serpentine heat exchanger is suspended in the tank water beneath an insulated steel deck, which rests on a formed concrete sill (see Figure 3).

3. Concept SWPL

Concept SWPL is an arrangement quite similar to RSVR above, but with vertical steel panel walls along the perimeter of the tank, to reduce the surface area and span of the decking. Construction is quite similar to that of common residential swimming pools (see Figure 4).

4. Concept PLYSS

Concept PLYSS is a tank constructed with prefabricated walls of sandwich plywood panels, which contain glass wool insulation and are assembled above-ground on a concrete grade slab. Beneath a plastic foam insulated floor, steel bands span the structure to reduce panel stress. Inside the tank above the water are cross-tie braces, which reduce panel stresses and serve to accept buoyancy loads of the heat exchanger. A plastic liner and a shingled wood-joist roof, with glass wool insulation and vapor barrier, complete the assembly. This concept has obvious limitations, but offers a means to exploit insulation of low basic cost (see Figure 5).

5. Concept CONCYL

Concept CONCYL is a completely prefabricated assembly, placed in-ground at the site and covered with earth. The basic structure is a steel-reinforced concrete cylinder, with concrete end plates and with interior partitions to position and support the heat exchanger. An elastic polymer coating on interior surfaces provides watertightness, and plastic foam insulation is placed on the exterior surfaces as part of the final installation procedure (see Figure 6).

6. Concept UTLBX

Concept UTLBX employs factory prefabricated wall structures of reinforced concrete, joined and sealed at the site as public utility boxes, or "manholes", are presently constructed. The heat exchanger is installed during site assembly and is supported by integral interior attachments and fasteners. Plastic foam is placed against the exterior of the walls as part of the installation procedure (see Figure 7).

Other, Rejected Concepts

In the search for low overall cost many concepts were suggested, involving a broad variety of materials, prefabricated structural forms, and construction techniques. Among those suggested, the following are the more prominent candidates that were finally judged unsuitable for ACES application.

Tank Shells Prefabricated of Steel or Plastic. Unit costs of various common shell structures were found to be generally high as compared to earth/liner or concrete/liner vessels. Included in investigations were:

- Welded steel tanks
- Bolt-together "culvert" sections
- Porcelain-coated steel silo modules
- Fiber-reinforced-plastic (FRP) tanks.

Cast-In-Place Concrete Silos. These structures, although rugged and watertight, are comparatively costly.

Prefabricated Concrete Stave Silos. The modest saving resulting from prefabrication is offset by the cost of transportation, especially considering the few present manufacturing locations. Also, a vertical axis, cylindrical shape affects heat exchanger costs unfavorably.

Tilt-Up Concrete Tank Panels. Watertight tanks are presently being constructed of large, prefabricated modular concrete slabs, but one active supplier reports that costs are generally even greater than for stave structures.

Vacuum as Insulation. Because of the high contribution of insulation to overall cost, vacuum between double shell walls, as "free" insulation, was briefly considered. However, the required physical structure was found to negate any savings.

Foam-In-Place Insulation. Among the foam-in-place insulation possibilities that were considered, sprayed polyurethane foam was given particular attention because of the possibility of providing strong, watertight, insulating structures directly in simple earth excavations. However, feasibility was suspect, due to questions concerning:

- Effective strength and flexibility for maintaining watertightness
- Quality control at the site
- Moisture permeability, with loss of insulating value.

Concrete as Insulation. Specialized concretes can combine insulating and structural functions, but were found to offer no significant benefit in this application where an R-40 overall rating is required.

Cost Ranking

For specific installations it might be required to locate the ACES energy storage assembly (1) within a building, (2) adjacent to a building, or (3) remote from a building. Alternatively, the placement may be optional and may be selected to optimize benefits or to minimize cost. Accordingly, cost estimates for the concepts have been made on three bases: (1) as a separate (free-standing) unit, (2) where applicable, as a structure which can be utilized for other necessary or desirable purposes (auxiliary value), and (3) where applicable, as a unit which can derive benefit from portions of other buildings without increasing the cost of the other building. Table 1 presents order rankings of the concepts according to estimated overall cost, for three tank sizes and for selected levels of integration with other buildings. Appendix A describes in some detail the assumed conditions and resulting costs.

Total cost differences between concepts are relatively small. Therefore in Table 1, the estimated cost for each concept is expressed as a ratio to the lowest cost, for each water volume rating.

With due regard for the small cost differences between concepts and the accuracies that may be expected from the cost estimates, the following observations can be made regarding the cost rankings.

(1) Concepts RSVR and SWPL appear favorable in all rankings.

(2) Concept ORNLFF appears favorable in fully integrated rankings but not in free-standing rankings.

(3) Concept UTLBX appears favorable in small free-standing rankings, but less favorable as either size or degree of integration increases.

(4) Concepts PLYSS and CONCYL do not appear clearly favorable in any of the rankings.

TABLE 1. COMPARATIVE COST RANKING OF CONCEPTS FOR ACES ENERGY STORAGE ASSEMBLIES

	Concepts and Corresponding Estimated Cost Ratio, Relative to the Lowest Cost for the Volume*					
	Rated Water Volume, cu.ft.					
	500		2000		4000	
Separate from any building (free-standing)	UTLBX	1.33	SWPL	1.31	SWPL	1.42
	RSVR	1.37	RSVR	1.37	RSVR	1.47
	SWPL	1.44	CONCYL	1.43	PLYSS	1.69
	CONCYL	1.48	PLYSS	1.47	ORNLFF	1.82
	PLYSS	1.49	UTLBX	1.56	UTLBX	1.96
	ORNLFF	1.52	ORNLFF	1.60	CONCYL	1.96
Separate, with full utilization of any auxiliary values	RSVR	1.27	SWPL	1.22	SWPL	1.31
	ORNLFF	1.27	RSVR	1.23	RSVR	1.31
	UTLBX	1.33	ORNLFF	1.33	ORNLFF	1.47
	SWPL	1.38	PLYSS	1.41	PLYSS	1.64
	PLYSS	1.43	CONCYL	1.43	UTLBX	1.96
	CONCYL	1.48	UTLBX	1.56	CONCYL	1.96
Maximum integration with a conventional building	RSVR	1.00*	RSVR	1.00*	RSVR	1.00*
	ORNLFF	1.07	SWPL	1.10	SWPL	1.19
	SWPL	1.21	ORNLFF	1.12	ORNLFF	1.21
	UTLBX	1.23	PLYSS	1.37	PLYSS	1.61
	PLYSS	1.32	CONCYL	1.38	UTLBX	1.93
	CONCYL	1.39	UTLBX	1.51	CONCYL	1.93

Estimated Costs

Table 2 is a compilation of the installed costs estimated for each concept, less the required water and heat exchanger brine which are common to all concepts. Three rated water volumes and three degrees of integration with other building structures are considered in this table.

Details of the development of these costs are presented in Appendix A. It should be noted that some concepts were not designed to the precise chosen water volumes because of standard commercial sizes of some materials. In these cases a slight variation was tolerated and the unit cost, in $ per rated cubic foot, was utilized in Table 2. This allows comparison on basic concept merit, and assumes that the selected rated water volumes are chosen somewhat arbitrarily.

The data of Table 2 was used in the compilation of rankings in Table 1.

Figure 1 graphically illustrates the relative unit costs of the concepts as a function of rated water volume. For this comparison the unit costs were positioned at the actual rated volumes rather than being rationalized to the specific nominal volume ratings.

Technical Performance Considerations

In the course of Phase I investigations, several contrasts became evident in the performance aspects of candidate materials and concepts, as follows:

(1) Ice inventory monitoring - The ACES control system depends on the measurement of tank water level for automatic ice inventory management. Changes in water level during ice formation are not uniform among the concepts because of tank configurations. Theoretical values of water level changes are presented for comparison in Table 3.

TABLE 2. ESTIMATED OVERALL COSTS OF CONCEPTS FOR ACES ENERGY STORAGE ASSEMBLIES

Heat exchanger, 40,000 BTU per hour

	Rated Water Volume, cu.ft.	Concept Designation					
		ORNLFF Fig. 1	RSVR Fig. 2	SWPL Fig. 3	PLYSS Fig. 4	CONCYL Fig. 5	UTLBX Fig. 6
Basic cost, free standing	500	$4,480	$4,040	$4,230	$4,370	$4,360	$3,910
	2000	9,200	7,840	7,510	8,410	8,220	8,960
	4000	14,200	11,500	11,100	13,200	15,300	15,300
Basic cost less maximum auxiliary value	500	3,740	3,720	4,040	4,200	4,360	3,910
	2000	7,630	7,050	7,000	8,120	8,220	8,960
	4000	11,500	10,200	10,200	12,800	15,300	15,300
Basic cost less maximum cost reduction through integration	500	3,140	2,940	3,550	3,880	4,080	3,630
	2000	6,420	5,740	6,300	7,840	7,940	8,680
	4000	9,400	7,800	9,250	12,530	15,060	15,060

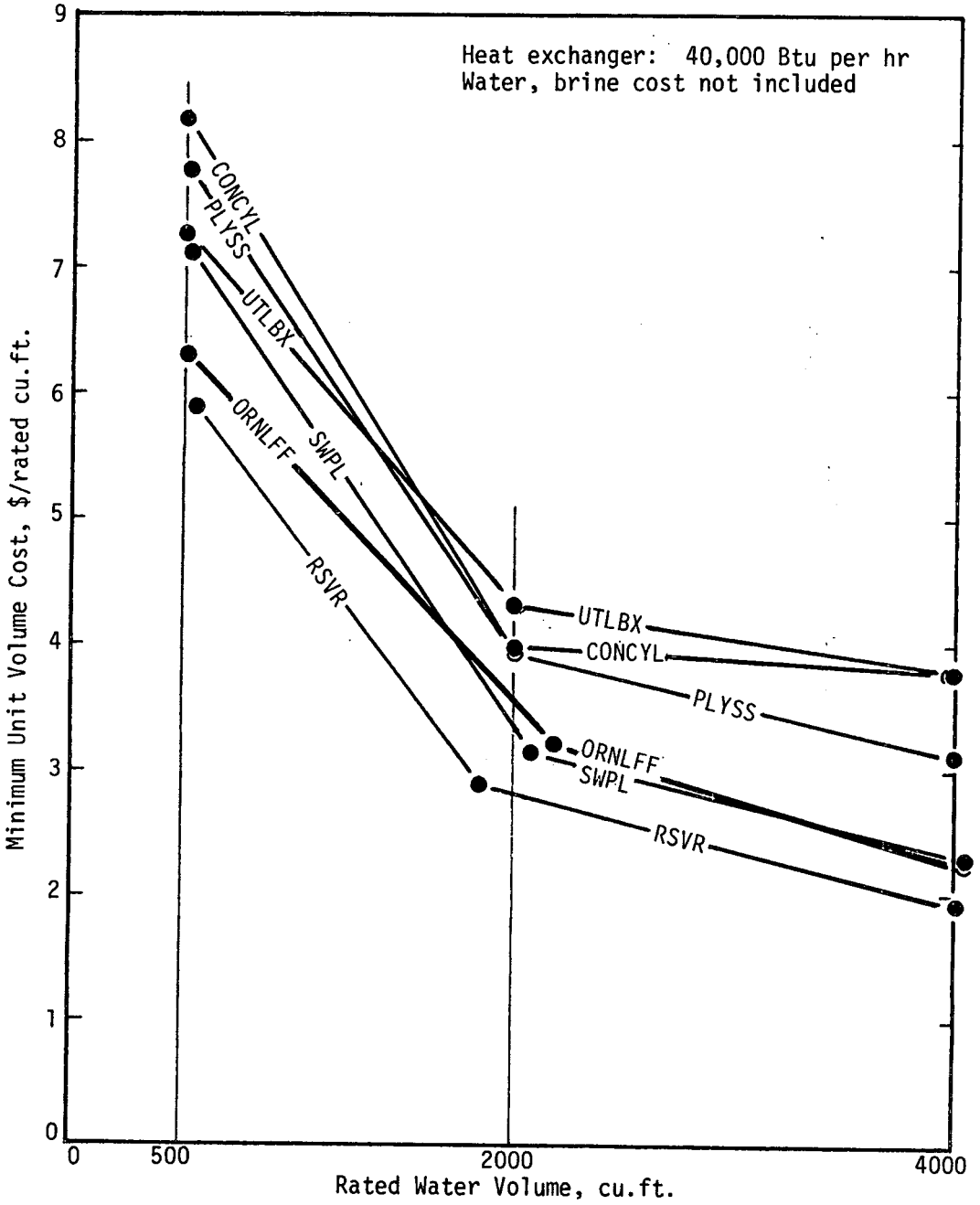

FIGURE 1. UNIT VOLUME COST OF SIX TANK CONCEPTS, FOR MAXIMUM INTEGRATION WITH A BUILDING - 3 TANK SIZES

TABLE 3. BASIC PERFORMANCE PARAMETERS OF CONCEPTS FOR ACES ENERGY STORAGE ASSEMBLIES, AS CONFIGURED FOR PHASE I EVALUATIONS

Concept Designation	Reference Figure Number	Increase in Water Surface Elevation at 9 Percent Volume Expansion, inch			Ratio, External Surface Area of Insulation/Rated Volume, sq.ft./cu.ft.			Capability to Support Earth Cover
		500	2000	4000	500	2000	4000	
ORNLFF	1	6.3	6.3	6.3	1.45	0.82	0.69	Yes, slight
RSVR	2	2.4	3.5	4.2	1.34	0.85	0.67	No
SWPL	3	4.7	5.7	5.9	1.07	0.68	0.56	No
PLYSS	4	7.4	7.4	7.4	1.11	0.68	0.56	No
CONCYL	5	17	17	17	1.30	0.75	0.67	Yes, considerable
UTLBX	6	11	11	11	1.44	0.90	0.64	Yes, considerable

(2) Energy loss with R40 insulation - Both R value of the insulation and the extent of the external tank insulation surface are important. The surface area-to-volume ratios of the concepts also are not uniform, and are presented for comparison in Table 3.

(3) Energy loss with deteriorated insulation - There appears to be controversy and a limited factual basis for the prediction of long-term effective thermal conductivities of insulation materials, especially those subjected to earth burial. All concepts included in this report utilize plastic foam insulation. Phase 1 costs are estimated for molded bead board polystyrene. However, the more costly extruded polystyrene foam board (skinboard), which has an integral closed cell skin, and which is purported to maintain lower conductivity, could be utilized. However, this substitution is not readily accomplished in the ORNLFF concept. The proprietary Foam-Form® blocks used in this concept typically are coated, on-site, with a waterproofing material, the effectiveness of which is not readily determined.

(4) Watertightness - All the concepts depend on a waterproof film, either as an applied coating or as a flexible liner to be installed. For films, a polyvinyl chloride plastic of 0.020-inch thickness was initially selected, because of its common use in swimming pools. It is believed capable of a 20-year life, especially as it is not subject to mechanical abuse, is not exposed to the ultraviolet radiation of daylight, and operates primarily at a refrigerated temperature. However, one swimming pool contractor declared that 90 percent of residential pools 3-4 years old leak at a rate of 1/4-inch per day. If this allegation is true and is a characteristic of liner material and fabrication rather than the (swimming

pool) application, then it might also be applicable to ACES installation. If the tank were to leak, energy inventory monitoring under the present control plan would be difficult at best. A more substantial liner film such as 0.030-inch PVC or chlorinated polyethylene rubber, such as Hypalon, both available at higher cost, might be used.

In concrete structures, watertightness would be affected both by basic permeability of concrete and by any cracks which form. To counter these effects an elastic coating is often applied. The coating may be relatively thin for permeability control, but must be substantial in thickness to be capable to stretch and remain impermeable across cracks in the concrete wall. This would be a topic for experimental investigation if Concepts UTLBX or CONCYL are to be developed.

Contacted Manufacturers and Commercial Interests

Firms which supplied information relative to Phase I for materials and constructions practices appear in Appendix B.

CONCLUSIONS

Based on the Phase I work performed and the evaluations thereof, Battelle concludes:

(1) Concepts have been identified which offer modest cost reductions when compared to the reference concept utilizing Foam-Form ®R blocks.

(2) Cost reductions and concept cost rankings are affected significantly by the degree to which the concept is integrated into other building structures.

(3) The concepts depend on materials and methods that vary widely with respect to confidence in cost estimates, quality assurance, and capability for longevity.

(4) Although the presented concepts conform to requirements of the work statement, there are significant differences in secondary performance aspects, including:

   (a) The change in water surface elevation as ice is formed, which affects energy storage management (see Table 3)

   (b) The surface area of the exterior, R40 insulation (see Table 3)

   (c) The surface area of insulation at or above ground level

   (d) The capability to support earth covers or substantial external top loads (see Table 3).

RESEARCH APPROACH

The major activities of the Phase I evaluation consist of the following consecutive steps, which are described below.

- Acquisition of information
- Origination of concept elements and concepts
- Screening of elements and concepts
- Preliminary development and design of concepts
- Preliminary cost estimation for concepts
- Cost ranking of concepts.

Literature Search and Preliminary Calculations

The project team reviewed pertinent sections of the ACES report, ORNL/CON-43, for familiarity. Limited literature searches were conducted on key topics such as insulation, tanks, reservoirs, membranes, plastic pipe, and ice. Fundamental computations were made to lend definition to the scale of components, such as the general tank size range and the length and spacing of heat exchanger elements for the specified heat rates.

Origination of Concepts

Ideas were solicited from a broad range of Battelle's multidisciplinary staff, using group and individual creative sessions. Battelle researchers with a mechanical engineering background contributed heavily to the creative efforts, but specialists in plastics, concrete, and soil mechanics also made important contributions. A common practice in idea solicitation activities is to limit applied constraints. As a result, a broad range of ideas tend to be generated.

Screening of Concepts

The unconstrained concepts were then screened to eliminate those that did not appear to be technically or economically feasible. For example, although fiber-reinforced plastic tanks are commercially available, i.e., for underground gasoline storage, their basic cost eliminates them from further consideration. For example, a 5350 cu.ft. tank is quoted at $33,000. Similarly, although vacuum for insulation seems to be "free", the necessary structure (or filler) and the dual wall shells are expensive.

Only the concepts that passed the screening process are presented in this Phase 1 evaluation.

Preliminary Design Analysis of Concepts

Each of the concepts that passed the screening process was subjected to the basic computations necessary to define the tank size and configuration judged necessary. Chosen tank sizes were the extremes specified in the work statement, namely 500 and 4000 cubic feet rated water volumes, and an intermediate size, 2000 cubic feet. In some cases, designing tanks for exactly the chosen rated water volumes was an inconvenient constraint. In those cases it was assumed that cost/gallon rather than absolute total cost would be compared to determine the concept ranking. The cost of the heat exchanger is believed to have only moderate influence on the concept ranking, and only an intermediate sized unit, rated at 40 KBTU/hr, was considered.

Where appropriate and practicable, knowledgeable specialists, within and without Battelle, were consulted to aid the preliminary design process and to help make judgments of feasibility.

Design assumptions and bases for cost estimating for each of the reported concepts appear in Appendix A.

Preliminary Estimation of Cost for Each Concept

Once the fundamental designs were defined, installed costs were estimated. In this procedure, 1980 manuals of the Rober Snow Means Company, Inc.* were used as a source of basic construction cost data. However, such data generally relate to large projects and are applied for trade union workers. Accordingly some judgmental adjustments were applied. For example, installation of 1-inch PVC pipe by a plumber is estimated to be roughly $6 per foot in the manuals*, but such cost is not believed applicable to the heat exchanger. Actual cost values that were used in the estimates are listed in Appendices A and C. Where important and practicable, actual cost estimates or quotations from potential suppliers of materials and services were sought.

For each concept the assembly was first considered to be a separate, stand-alone entity, and corresponding costs were estimated. Subsequently the resulting structure was examined for possible auxiliary value that might be inherent in the design and subject to eventual exploitation. Finally, the cost effects of integration with other structures, placing the assembly adjacent to or within a conventional building structure at time of construction, were considered. In these analyses it was basically assumed that the primary structure would bear all appropriate fixed costs and ordinary building costs. The ACES assembly was assumed to be able to share any part of the structure without cost, to the extent that (1) basic costs were not increased and (2) useful space was not occupied. Direct cost increases and all values lost through space occupancy are subtracted from integration savings. For example, if the assembly is placed under a building, it is assumed that the portion of the building above the storage tank would have needed only a footing, a wall to grade level, and a grade slab, if the tank had not been installed. Many permutations of structure-ACES tanks are possible, of course, and only the most favorable have been considered.

---

* (1) Building Construction Cost Data, 1980.
(2) Building Systems Cost Guide, 1980.

Appendix A lists the assumptions that were made and the individual cost elements for each of the reported concepts.

Cost Ranking of Concepts

Cost ranking is simply the listing of the concepts in order of their estimated cost; the lowest cost concept being listed first. Where actual rated water volumes deviated slightly from the nominal target values (in order to obtain convenient integer size material units or modules), unit costs of dollars per rated cubic foot were used to normalize the absolute costs to the specific nominal rated sizes.

Table 1 presents the resulting concept ranking for lowest overall cost for (1) tanks separate from any building (free-standing), (2) tanks from which maximum auxiliary value can be derived, and (3) tanks which are integrated with a conventional building to the maximum extent. Also included in Table 1 are cost ratio factors which allow comparison of concepts and effects of integration for each rated volume.

GENERAL COST COMPARISONS

In the process of selecting specific detailed conceptual designs to be evaluated in detail, it was both possible and necessary to make comparisons of three basic elements of the systems. These three elements are:

- Insulation
- Heat Exchanger
- Structures.

General discussions of the research findings in these three areas are presented in the following paragraphs.

Insulation

The requirement for R40 insulation is a major cost element in all ACES concepts. A comparison of costs for low-cost insulation materials, which might be applicable to ACES and which are commonly available, is presented in Table 4. Note that the commercially available form of some of these materials is not exactly an R40 rating.

TABLE 4. GENERAL COST COMPARISON OF COMMON INSULATIONS

Insulation Material	Thickness, inch	R Value	$\$/ft^2$ @ R40 (Rationalized)
Vacuum	--	--	(0)
Glass wool	12	38	$0.4*
Molded bead polystyrene	10	40	1.1
Cyanurate polyurethane	6	40	1.8
Extruded polystyrene skinboard	8	43	2.3
Foam-Form® block	(2 units)	40	2.8

* One place decimal units are used where greater certainty should not be construed.

The use of vacuum was briefly considered. Vacuum has been used in relatively large cryogenic applications, where a honeycomb or silica gel powder is used to support the pressure load between the necessary shells. The problems of fabricating a large vacuum structure and maintaining the vacuum are evident. Therefore, vacuum was judged not to be cost effective, and was not considered further.

Glass wool is also difficult to exploit. Its low basic cost is offset in this application by the need to exclude moisture, and an absence of any inherent mechanical strength. Concept PLYSS of this study does, however, consider its uses in an above-ground tank. Glass wool also might eventually be considered as an alternative cover lid insulation where physical support and a vapor barrier can be provided effectively.

Molded bead polystyrene is of great interest for ACES applications. This is the material used for Foam-Form® blocks, and it is frequently used in subsurface perimeter insulation for buildings. Its compressive strength is adequate to support substantial hydrostatic loads under flexible plastic liners. Its long-term insulating value in moist and freeze-thaw environments has not been clearly established, however. In one reported experimental installation, a 1-inch thickness of bead board was exposed for 10 years as subsurface highway insulation. The R value at the end of the 10-year period was found to be 67 percent of the initial value, and moisture content had increased to nearly 10 percent by volume.* In this experiment, extruded polyester skinboard also was installed for 10 years. The R value at the end of the 10-year period was found to be 90 percent of the initial value. This characteristic for moisture adsorption is alleged also to apply to polyurethane insulations, even though they too are commonly used in underground perimeter applications.

Material degradation is a complex subject, involving physical phenomena not readily analyzed, but the long-term cost/performance ratio may eventually be an important issue in ACES applications.

---

* ASTM Special Technical Publication 660, pp. 234-260.

Heat Exchanger

Another significant cost element in all ACES concepts is the heat exchanger. Thermal conductivity of a plastic tube wall is a key factor, especially in applications where high heat transfer rates are required, where total pipe lengths are long, and where maximum ice coatings are relatively small. For metal tubes, as an ice coating forms, the conductivity of ice becomes the dominant factor, and the (higher) conductivity of the metal becomes relatively insignificant. However, a conductivity much less than that of ice (1.3 Btu per hr per foot per F), increases the total length of tubing required, and consequently material and labor costs are greatly increased. The thermal conductivity of four common pipe materials is compared to that of ice in Table 5.

TABLE 5. THERMAL CONDUCTIVITY OF COMMON PIPE MATERIALS COMPARED TO THAT OF ICE

Material	K, Btu/hr/ft/F
Ice	1.3
PVC - Type I	0.085
Medium Density Polyethylene	0.22
Steel	30
Copper	220

Unfortunately, the advantage of greater thermal conductivity of polyethylene is offset by two significant disadvantageous attributes: (1) the pipe is not rigid and is thus less manageable and (2) solvent welding, known to be cost-effective, reliable, and durable, is not applicable. Joints must be mechanically joined or fusion bonded.

It may be possible to (1) improve the effective thermal conductivity of PVC by modifying the formulation or (2) to improve the rigidity and manageability of polyethylene pipe by formulation. These possibilities appear to be areas for subsequent investigation which presently do not affect concept ranking.

Structures

Many of the concepts considered for ACES applications depend on discrete, rigid wall shells to contain the water and support hydrostatic loads. Phase I investigations considered and abandoned the following familiar container structures because of high cost.

(1) Concrete stave silos
(2) Poured-in-place concrete cylinders
(3) Fiberglass reinforced plastic tanks
(4) Steel tanks
(5) Corrugated steel bolt-together structures.

Two important familiar container structures which were judged promising are:

(1) Large diameter, reinforced concrete pipe, and
(2) Prefabricated utility boxes, or "manholes" as they are also termed.

These two structures are incorporated in proposed Concepts CONCYL and UTLBX, respectively.

SIX STORAGE ASSEMBLY CONCEPTS, DESCRIPTIONS, AND COMMENTS

Concept ORNLFF

Figure 2 illustrates the ACES storage assembly concept described in the ORNL/CON-43 report. This concept is presented in this report as a reference basis for cost comparison.

Description

An in-ground tank is shown, although an above-ground tank could be considered. An excavated hole receives a poured concrete footing and a gravel/sand fill to present a smooth level floor. Specialized proprietary plastic foam blocks* are then assembled on the footings. Tongue and groove features facilitate alignment, and mitering or lapping is accomplished at tank corners so that the important internal cavities will connect. Into these communicating passages, steel reinforcing rods are placed and concrete is poured. This procedure unifies and strengthens the structure. An available 11-inch-thick block provides an integral R20 rating and is the obvious choice for ACES.

The polystyrene block unit, 11 x 16 x 48 inches, can be cut to 1-foot lengths but is more cost-effective in 2-foot wall length increments. The effective wall height increment is, of course, 16 inches.

On the floor of the tank, insulation of R40 rating is placed. Ten-inch thickness of molded bead polystyrene is assumed. To achieve the required R40 rating in the walls, a 5-inch layer of molded bead polystyrene foam plank is cemented to the walls.

Within the resulting insulated tank, a fitted waterproof flexible plastic liner is positioned. A concrete slab floor is poured on top of the lower section of the liner. Steel hooks are cast into the floor slab and project from the upper surface. Plastic ropes, attached to these hooks,

---

* Foam-Form Canada Limited.

ORNL-DWG 79-16647

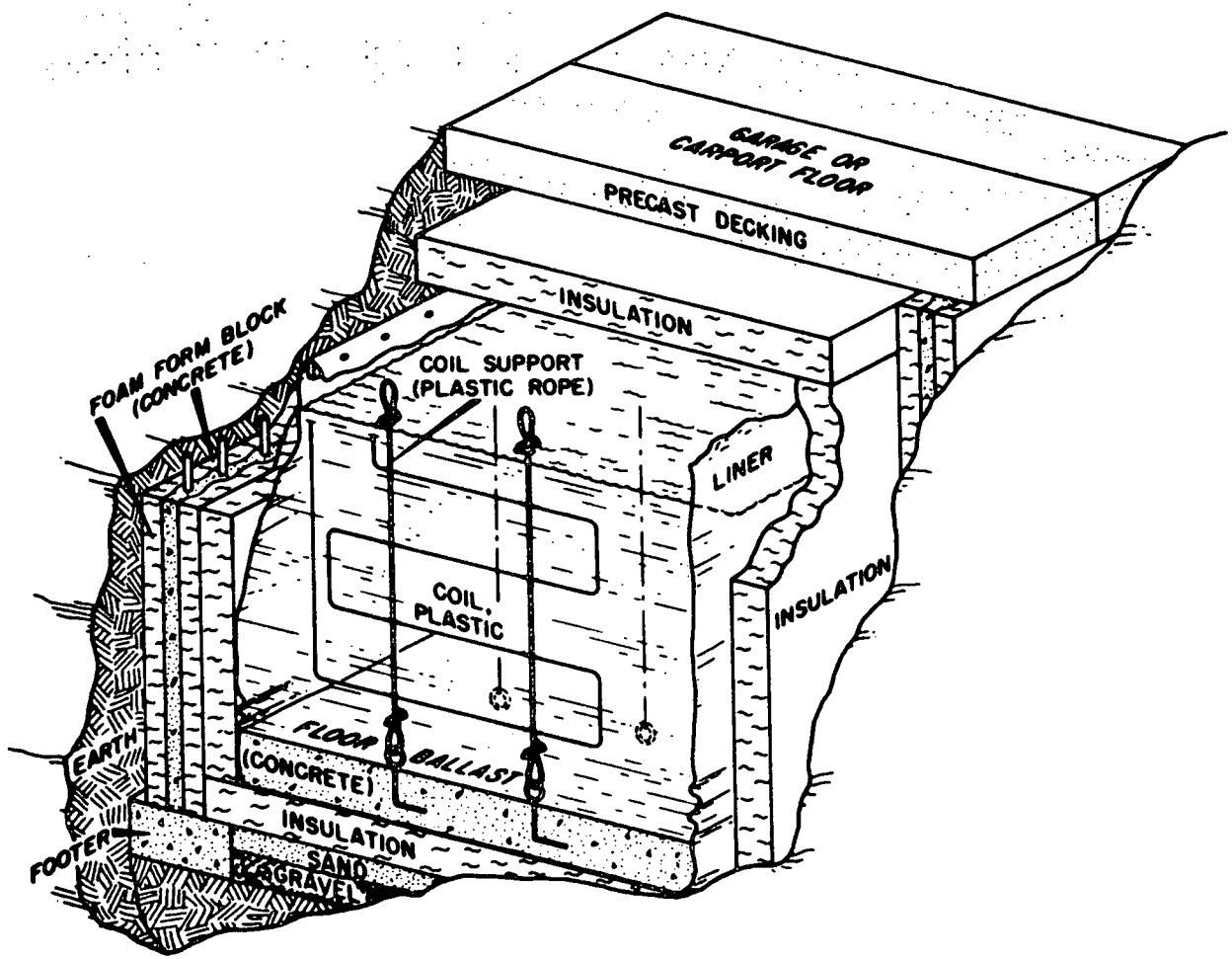

FIGURE 2. BASIC ARRANGEMENT, CONCEPT ORNLFF

extend vertically upward and are attached to structure at the top of the tank. The heat exchanger coils are attached to these ropes. As ice forms on the heat exchanger the buoyancy forces are transmitted to the ballast to prevent the heat exchanger from progressively rising out of the remaining water.

The heat exchanger is formed of shaped modular coils, fabricated of extruded thermoplastic pipe and designed to transmit thermal energy at the required rate to and from the tank. Above the water surface another layer of plastic foam insulation panels serves to complete the insulating envelope. Pre-cast reinforced concrete decking rests atop the reinforced walls to complete the structure. An access port is incorporated in the deck to allow periodic tank inspection.

Comments

Regarding technical and cost effectiveness of the concept, the following observations are made:

(1) The concept appears to be generally cost effective and is obviously feasible as demonstrated in actual ORNL applications.

(2) The commercially available foam blocks are a useful building material, eliminating need for concrete forms and providing a substantial insulating value. The long-term R value degradation is not a reported property, however.

(3) The concrete ballast, as well as floor, roof, and wall insulation all serve to enlarge the outside wall dimensions, and increase cost. Outside walls are estimated to cost $3.80 per square foot, installed.

(4) The attachment of heat exchanger tubes to plastic ropes by twisted metal wires (as described in the ORNL report) will perhaps be costly to implement.

(5) The reinforced walls and strong decking contribute to valuable integration benefits.

(6) A substantial thickness of earth cover on the deck for larger tank sizes would comprise large loads requiring very large deck beams.

Concept RSVR

Figure 3 illustrates an alternative concept that is essentially a covered reservoir that uses the surrounding soil structure to support and contain the water.

Description

A shaped cavity is formed in the earth by cut and fill excavation, as is common in residential swimming pool construction. A 45-degree slope is usually the steepest incline that is attempted with common earth structures, although in this application the insulation panels and water pressure may contribute stability to steeper inclines. A concrete ballast slab is cast on the cavity floor. To obtain the required mass and slab distribution for ballast beneath the heat exchanger, it will be necessary to extend the concrete slab beyond the finished floor area. The bottom portion of the inclined earth walls must be replaced and shaped after the ballast slab is in place. Flanged, threaded iron fittings are embedded in the concrete ballast slab to connect with the heat exchanger structure.

When the concrete slab is poured, a shaped, reinforced concrete sill is formed around the tank perimeter at or above grade. An important feature incorporated into this sill is a molded plastic strip designed to receive and hold the upper edge of the flexible tank liner.

In the shaped cavity, fitted planks of plastic foam insulation are loosely placed. During placement, specialized "finders" will be temporarily placed through the insulation and into the ballast attachments.

A prefabricated, fitted flexible plastic liner is placed in the resulting cavity and attached at the sill. Above each ballast attachment,

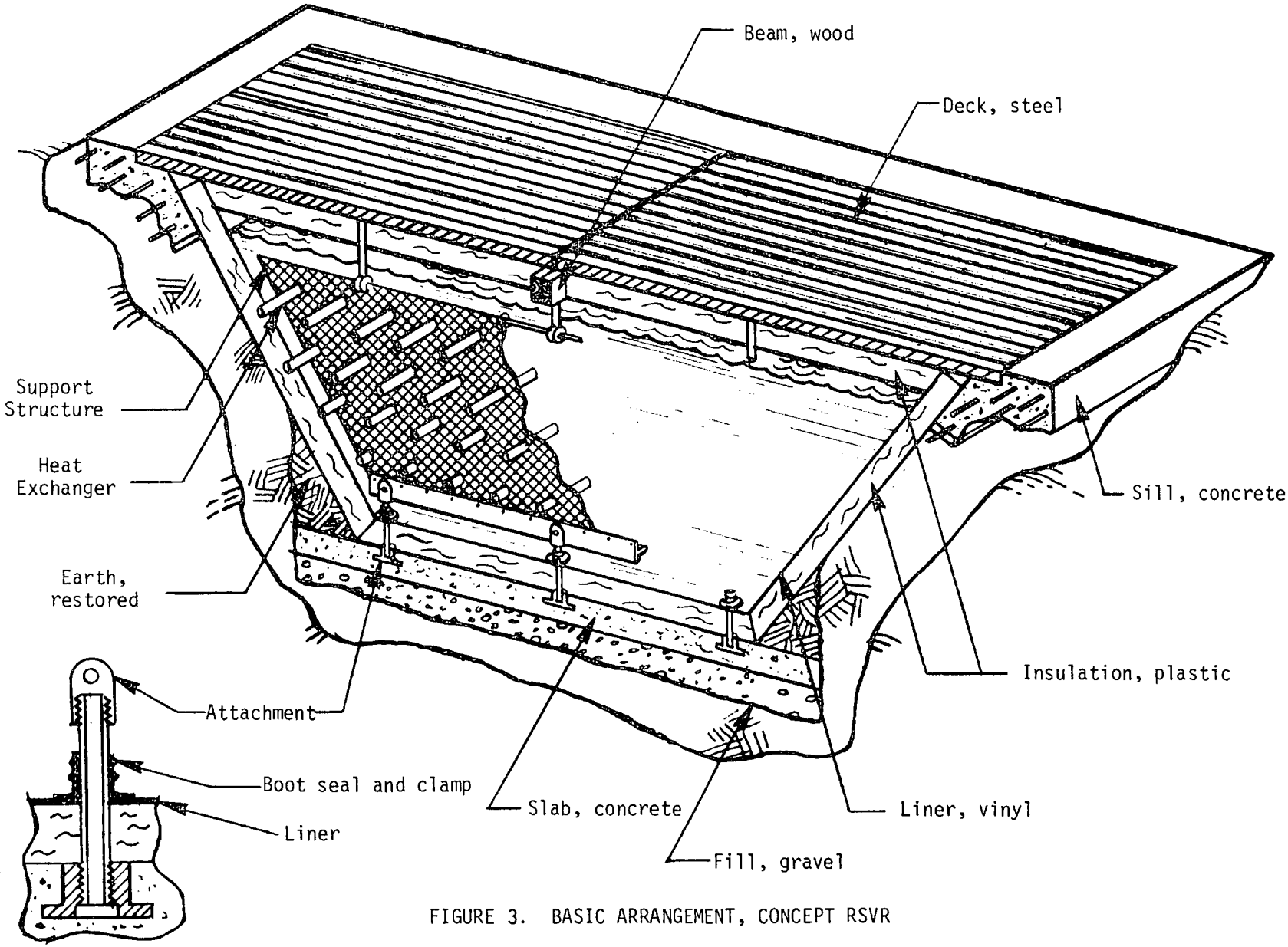

FIGURE 3. BASIC ARRANGEMENT, CONCEPT RSVR

as located by the "finders", the liner is cut and sleeved boots are solvent welded into place. Within the boot a strong cylindrical rod or pipe is placed, engaging the threaded ballast flange beneath the floor insulation. The sleeve is then sealed to the rod with sealant compound and clamps.

The heat exchanger is fabricated from round plastic pipe, positioned and supported in a mesh grid partition of plastic coated wire chain link fence fabric. Across the bottom of each mesh partition the ice buoyancy load is transmitted from the mesh through a structural beam to the ballast attachments. At the top of the tank the heat exchanger and the top insulation are attached to the decking or flooring. For outdoor installations the decking could be panels of roll-formed galvanized steel.

Comments

Feasibility and cost considerations for this concept lead to the following observations:

(1) The concept appears to be generally cost effective and technically feasible.

(2) Applicability of the concept requires favorable soil structures, which may not be present in all locales.

(3) Penetrations through the plastic liner, as required for attaching the heat exchanger to the ballast, are a common practice. However, leakage might occur at these points.

(4) A large expanse of decking is costly, not likely capable to support substantial external loading, and exposes a large insulated surface area to ambient grade level temperatures.

(5) Forming the concrete sill around the top periphery is a difficult procedure.

Concept SWPL

Figure 4 illustrates a variation of the previous concept.

Description

This concept was formulated to overcome problems identified in Concept RSVR. It essentially conforms to common residential swimming pool construction. Instead of continuing the inclined wall slope to the earth surface, a ledge is formed on which prefabricated steel panels and braces are erected. Discrete masses of concrete are poured as pads to stabilize the panels and associated bracing. After the excavated earth is backfilled against the outside of the steel walls, a reinforced concrete sill is formed around the entire perimeter. The remainder of the assembly is identical to that of Concept RSVR above.

Comments

The following contrasts to Concept RSVR are evident.

(1) Although the steel panels are costly ($18 per perimeter foot plus installation), the reduced cost of the decking and the sill, because of a smaller top opening, offset the high cost of the panels.

(2) The capacity of the sill to accept external loads would be relatively low if it were placed directly on filled earth. However, the sill can be cast to be integral with the upper portion of the steel wall and bracing structure. This can possibly provide the necessary perimeter strength and stability.

(3) The overall exterior surface area of insulation for a given tank size is reduced, as is the top area at the ground surface.

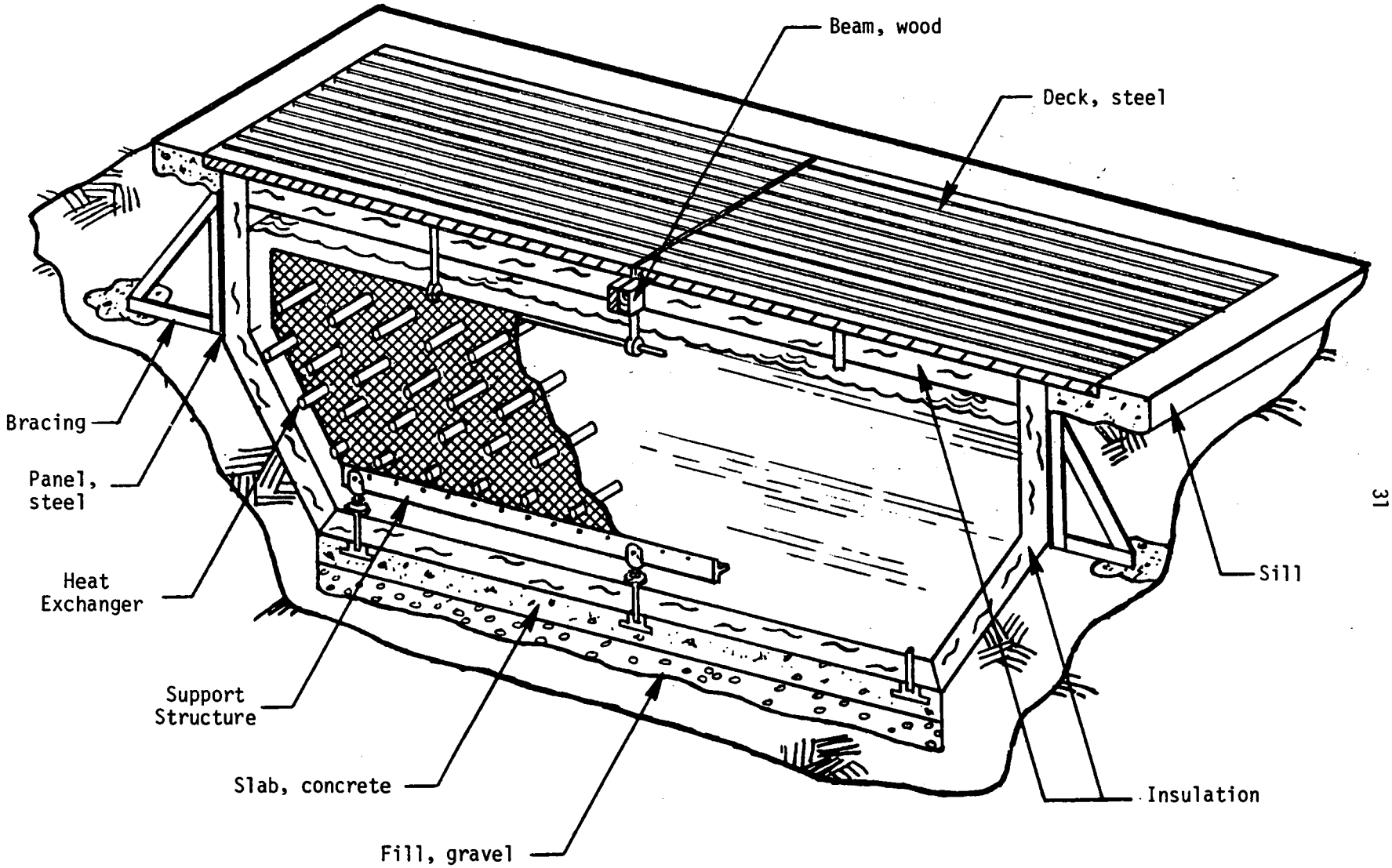

FIGURE 4. BASIC ARRANGEMENT, CONCEPT SWPL

Concept PLYSS

Figure 5 illustrates a concept intended to exploit the low cost of glass wool insulation.

Description

An above-ground tank is constructed of stressed-skin plywood panels, inside of which glass wool is placed. Four identical panels, 10 feet high, are prefabricated and are assembled at the site on a prepared concrete grade slab. Steel straps span the floor area and are attached to the lower edges of the panels to restrain the horizontal hydrostatic load against the panels. Across the straps, a 10-inch thickness of plastic foam plank insulation is placed to present a smooth base for the fitted flexible plastic liner.

The heat exchanger is formed and supported in mesh as in previous concepts, but the framed support structure is formed of pipe attached to the tank walls above the highest water line. At this level the cross members also brace the wall structure. Diagonal and horizontal bracing at frame edges unitize the frame structures to accept buoyancy loads.

An insulated lid is constructed of wood framing, vapor barrier, glass wool, plywood sheathing, and composition shingles.

The exterior may be painted, stained, or covered with a finish siding material.

Comments

This concept, although meeting basic ACES requirements, might have limited geographical applicability for the following reasons:

(1) Installation appears limited to above-the-ground or within-basement applications. However, in some locales, in-ground wooden foundations and basement walls have been constructed. In-basement applications are likely not cost-effective if redundant walls are required.

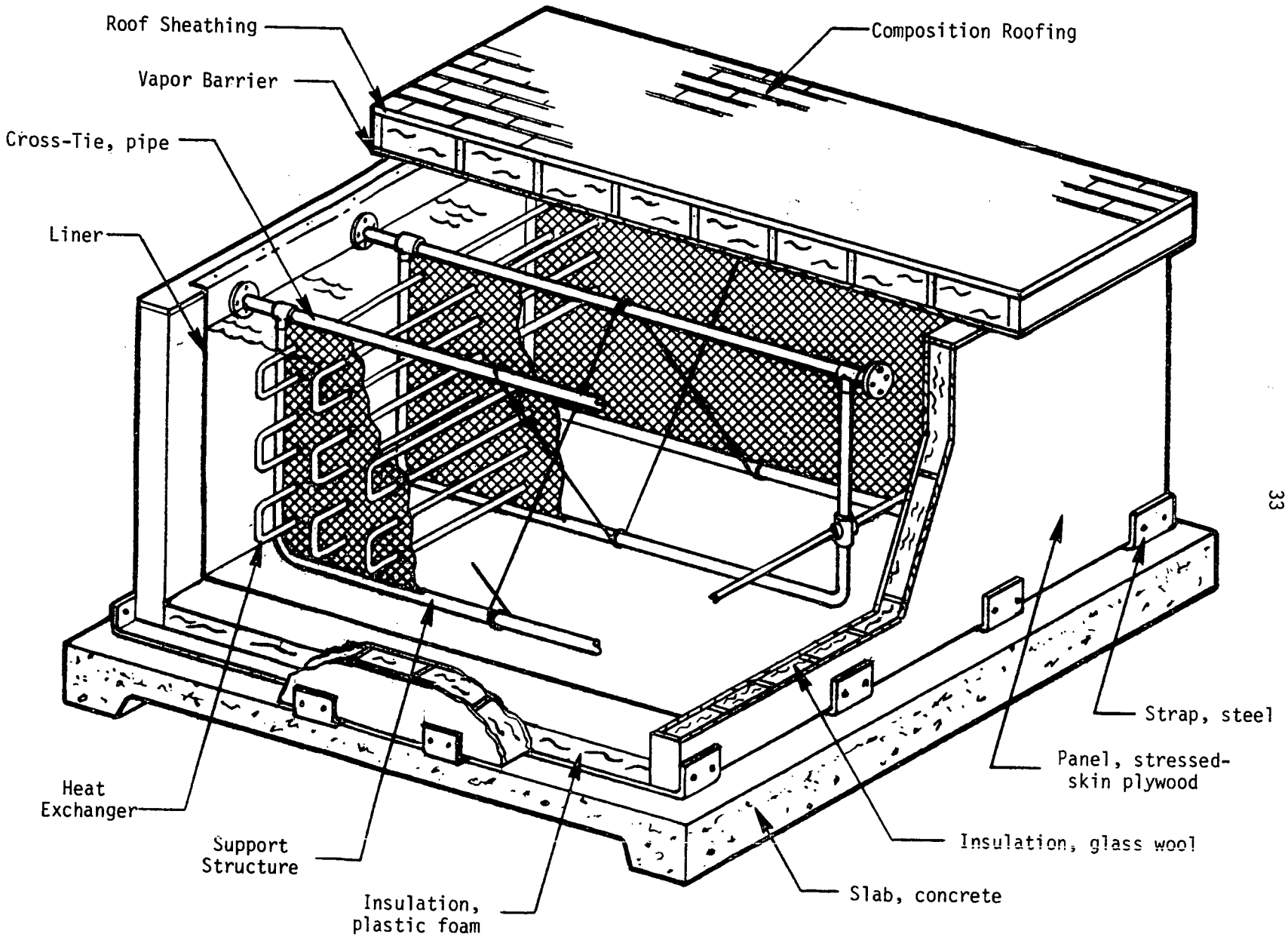

FIGURE 5. BASIC ARRANGEMENT, CONCEPT PLYSS

(2) Such a large structure is likely to be unsightly and may violate existing residential codes and ordinances.
(3) A footed slab may be required for load capacity and thus reduce cost-effectiveness further.
(4) Extensive surface area is exposed to air temperatures.
(5) Longevity is questionable.

Concept CONCYL

Figure 6 illustrates a completely prefabricated concept based on a large reinforced concrete pipe that could be produced in several U.S. locations with the integration of several existing technologies and the commitment of significant investment capital.

Description

The structural wall of the tank is a 10-foot reinforced concrete cylinder, 4 inches thick, with steel reinforcement. Concrete circular partitions and end plates will be custom fabricated and factory assembled into the cylinder to complete the tank structure. These bulkheads significantly increase the structural strength of the cylinder. The end plates are positioned inward from the ends of the cylinder, and necessary plate-to-cylinder sealing is accomplished by extruding a polymerized grout into aligned, keying grooves of the two members. The inner surfaces of the cylinder and end plates of the tank are then coated with a polymer material of low permeability, to provide watertightness. The considerable elongation capability of this polymer material is expected to satisfactorily bridge any small cracks that may develop in the concrete.

The heat exchanger is formed by placing straight lengths of rigid plastic pipe through aligned holes of the end plates and partitions. The ends of the pipes which extend into the cylinder end spaces are then joined together with fittings to complete the flow paths. Seals are provided by O-rings where the tubes penetrate the end plates. The O-rings are placed and retained in plastic liners that are embedded in the end plates during manufacture.

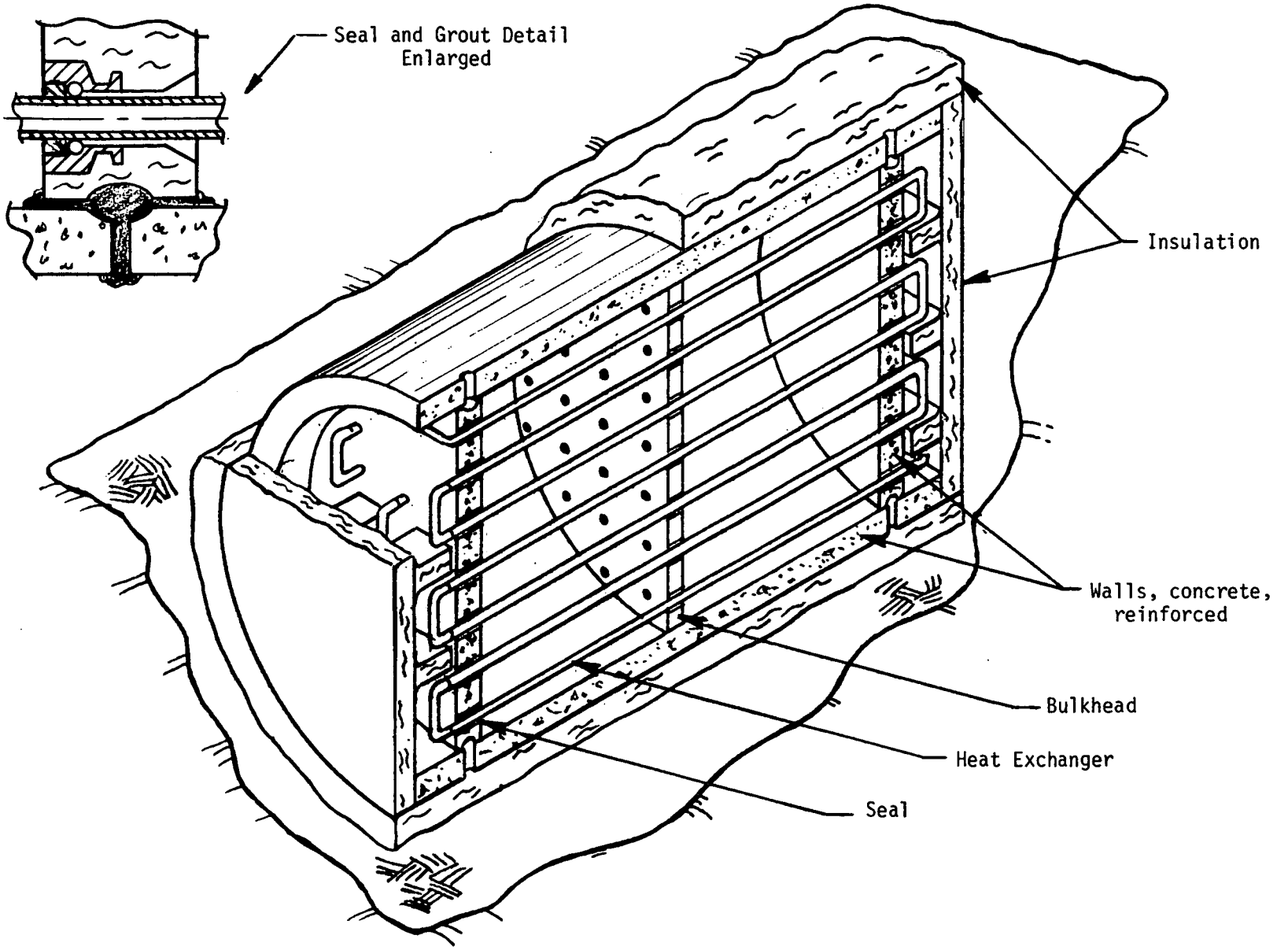

FIGURE 6. BASIC ARRANGEMENT, CONCEPT CONCYL

Using the same manufacturing equipment, cylindrical concrete tanks can be cast in various lengths to meet designed volume specifications. The practical limit of length for transportability is about 32 feet, and required water volumes greater than 2000 cubic feet would require field assemblies of two cylindrical sections, placed end-to-end to save insulation costs.

The tanks will be transported on special trailers which have the equipment necessary for emplacement. The concrete structure is positioned in the excavation on a prepared bed of fill and plastic foam insulation. The remaining insulation is then applied and held in place by the earth backfill.

Comments

(1) A completely prefabricated assembly is provided.
(2) The shape provides a substantial change in water level for ice inventory sensing.
(3) The shape and strength provide a basic ability to support earth and vegetative cover.
(4) The technology for pipe wall manufacture is available, but not developed.
(5) Numerous seals must function properly to achieve water-tightness. Also, an applied elastic coating to eliminate permeation and bridge hairline cracks that are expected to form will be of substantial cost, and may need to be thicker than assumed.
(6) Factory manufacture of the assembly may provide benefits in cost and quality assurance not available in on-site construction.
(7) The 32-foot length is longer and heavier than pipes normally made and delivered.
(8) The multiple units required for sizes above 2000 cubic foot represents a cost penalty.
(9) The concept does not offer significant auxiliary cost benefits or the ability to share other necessary building structures.

Concept UTLBX

Figures 7A and 7B illustrate a modular concept based on use of prefabricated box sections similar to those presently manufactured for prefabricated utility boxes, or "manholes".

Description

The primary tank structure is formed of rectangular, open-ended shells of reinforced concrete, similar in size, weight, and shape to the utility enclosures presently provided, under strict functional specifications, by specialized manufacturers throughout the U.S. The shells are assembled end-to-end at the site, capped, and held together by tensioning members. Commonly a waterproof seal is placed at the joints and, although the concrete has not been found to crack, a waterproofing coating is factory-applied to interior surfaces to negate permeability.

The heat exchangers are factory assembled in the individual modules, using vertical lengths of plastic pipe which are fastened to the upper and lower module walls. Coupling of the heat exchangers is accomplished at the site as the modules are assembled.

The sections and ends of the shells are transported to the site and placed in an excavated hole on a prepared bed of fill and insulation, using delivery equipment standard to this industry. When the assembly is complete the sidewall and top insulation is applied and held in place by the earth backfill.

Comments

Feasibility and cost considerations lead to the following observations:

(1) The concept appears generally cost effective.

(2) No significant extension of current practice is required to fabricate or install the concrete structures.

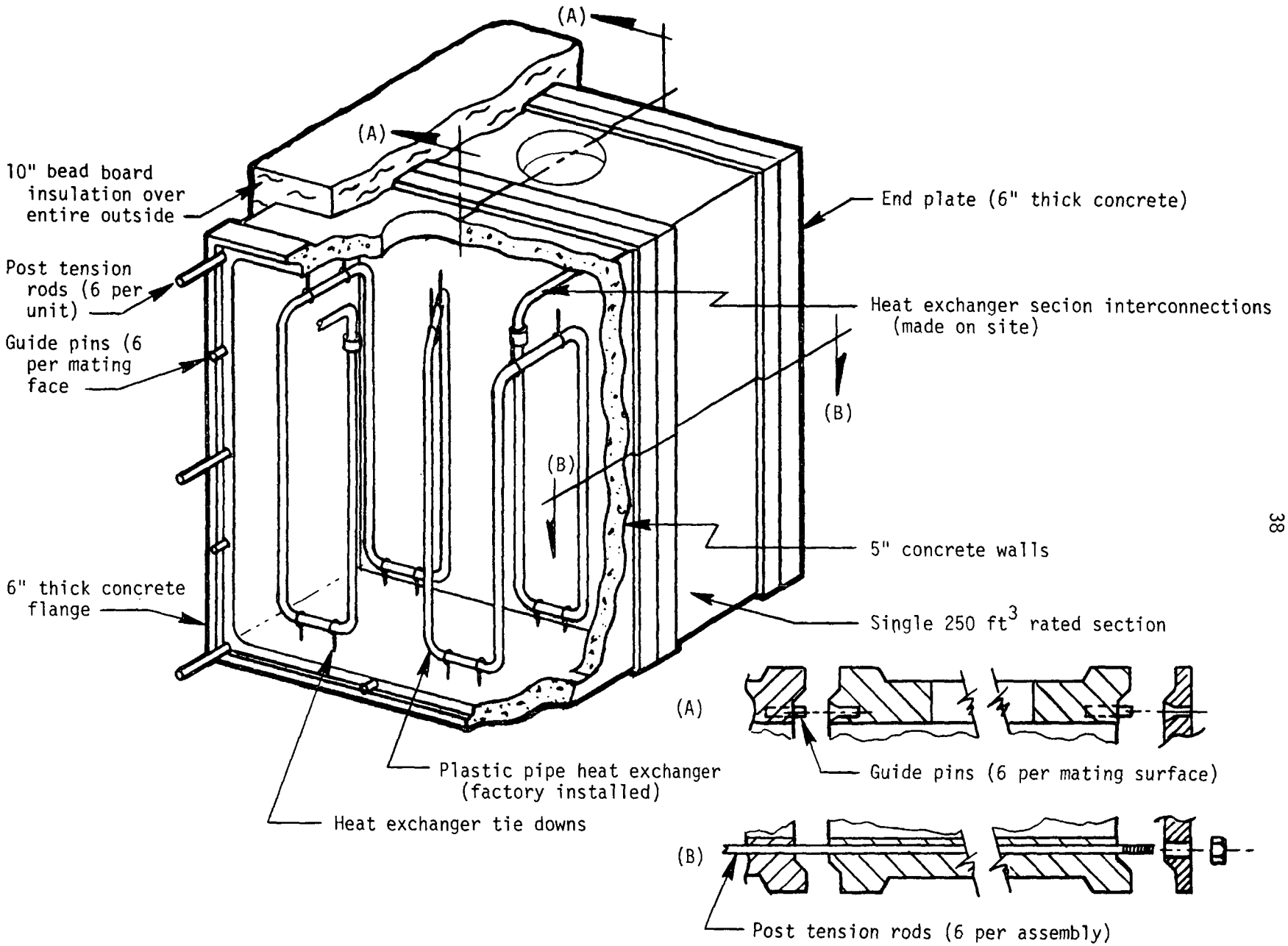

FIGURE 7A. BASIC PREFABRICATED SECTIONS, CONCEPT UTLBX

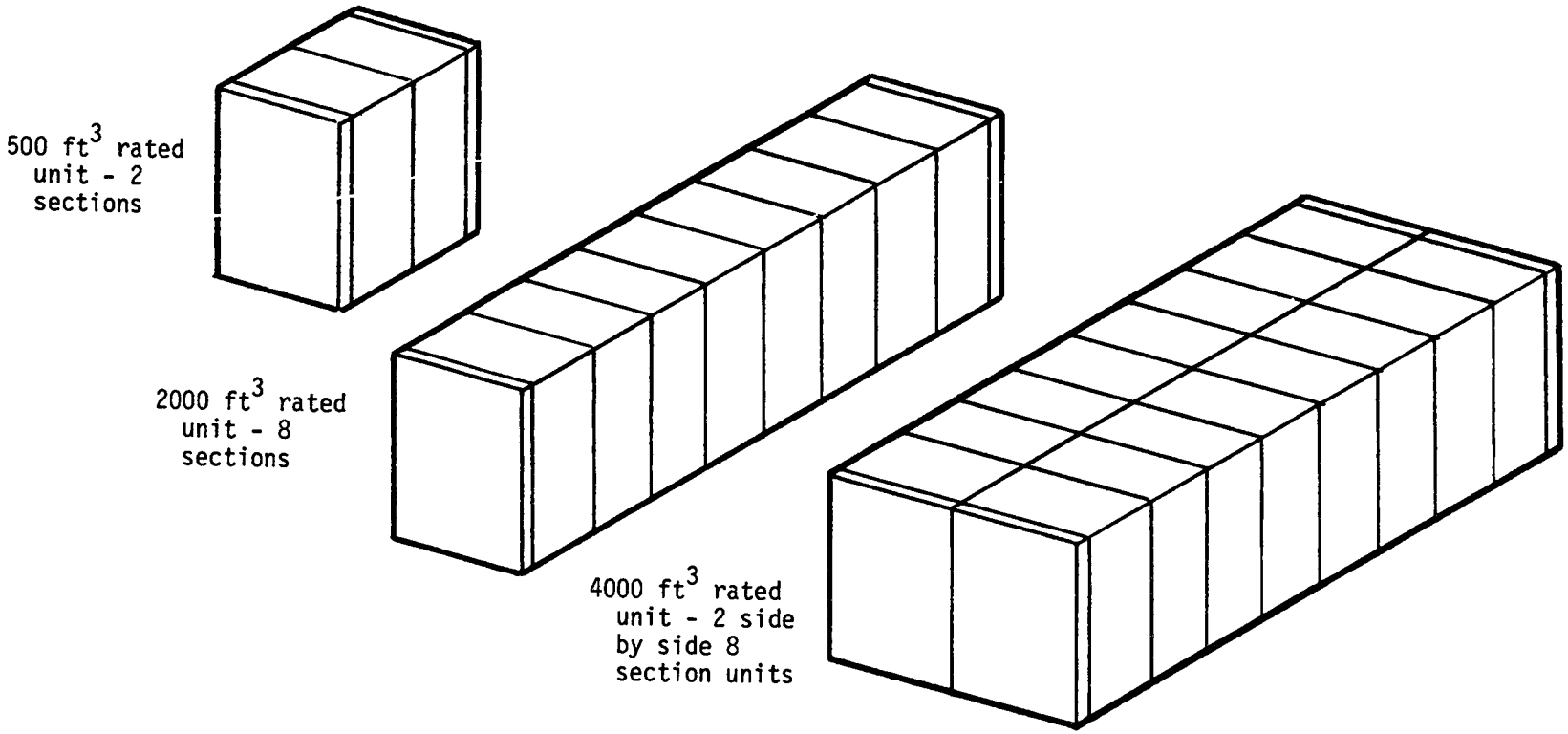

FIGURE 7B. THREE SPECIFIC SIZE TANKS MADE FROM BASIC PREFABRICATED SECTIONS, CONCEPT UTLBX

(3) Strong, dense, reliable structures result from the vibration of the prefabricated structure during concrete placement.

(4) The stringent quality control measures that are required for utility enclosures are available for quality assurance.

(5) Factory manufacture may provide benefits in cost and quality assurance not available in on-site construction.

(6) The structure is capable of supporting moderate earth cover.

SUMMARY - PHASE II

After reviewing the Phase I findings, ORNL selected the following three concepts as subjects for the Phase II detail design developments.

(1) Concept ORNLFF - An assembly, envisioned in ORNL/CON-43 report, has a tank that is site-constructed of modular Foam-Form® blocks, which receive a poured, reinforced concrete fill and provide an integral, R-20 insulating value.

(2) Concept SWPL - An assembly which depends largely on earth for support of a water-containment membrane liner and which makes substantial use of components used for residential swimming pools.

(3) Concept UTLBX - An assembly which uses large precast concrete structures for tank sections. Similar structures are used for underground housings for public utility equipment, and are termed utility boxes or "manholes".

Designs

For each concept, approximately ten tanks were designed, ranging from 500 to 4000 rated cubic feet, as specified. For each of the selected tank sizes, five heat exchangers were designed, ranging from 18,000 to 60,000 Btu per hour heat transfer rates, as specified.

Costs

Table 6 presents estimated costs for complete, free-standing energy storage assemblies of each concept, for four tank sizes, and for heat exchangers providing the least and greatest heat transfer rates. It should be noted that the tank sizes are not of identical volumes, due to limitations in available sizes of modular building components. Also, for concepts ORNLFF and UTLBX, distances from the installation site to the concrete precast plant and to an available lifting crane affect the finished cost, as indicated on this table and elsewhere in Tables C-1 and C-3.

TABLE 6. ESTIMATES OF TOTAL COST AND UNIT COSTS FOR THREE CONCEPTS AS DESIGNED IN PHASE II, FOR 4 TANK SIZES

(Free-Standing Configuration)

	ORNLFF*			SWPL			UTLBX*		
	Tank Size, cu.ft.	Heat Exchanger, Btu/hr 18,000	Heat Exchanger, Btu/hr 60,000	Tank Size, cu.ft.	Heat Exchanger, Btu/hr 18,000	Heat Exchanger, Btu/hr 60,000	Tank Size, cu.ft.	Heat Exchanger, Btu/hr 18,000	Heat Exchanger, Btu/hr 60,000
Estimated Total Cost, $	520	5,900	6,830	510	5,500	6,140	500	6,620	7,230
	1,080	7,660	8,660	1,260	7,390	8,030	1,000	9,190	10,140
	1,840	9,490	10,430	2,190	11,200	11,890	2,000	15,220	15,960
	3,960	14,960	16,020	3,920	17,900	18,590	4,000	27,760	28,830
Estimated Unit Cost, $/cu.ft.	520	11.4	13.1	510	10.8	12.0	500	13.3	14.6
	1,080	7.1	8.0	1,260	5.9	6.4	1,000	9.8	10.7
	1,840	5.2	5.7	2,190	5.1	5.4	2,000	7.9	8.3
	3,960	3.8	4.1	3,920	4.6	4.7	4,000	6.9	7.2

* Distances from concrete precaster and from lifting crane home base are assumed to be 100 miles each. See Tables C-1 and C-3 for effect of other distances.

Cross comparisons between the three concepts can perhaps best be made in Figures 8 and 9, which present the estimated cost data in graphic form.

For concepts ORNLFF and SWPL, it may be advantageous to plan and construct the energy storage assembly as part of an associated building. Placing the assembly adjacent to the building may allow certain structural and procedural costs to be combined and shared, for a modest reduction in overall cost. Also, the deck surfaces may be of utility (as for a patio or carport floor), thus reducing the effective cost of the energy storage assembly. These and other integration possibilities were investigated and discussed in Phase I. (See pages 7, 8, A3-A6, A14-A15.)

Performance

Several general design characteristics were presented in Phase I, Table 3. Detailed analysis performed during Phase II resulted in recognition of an additional design characteristic of critical importance: the ability of the heat exchanger tubing to support the buoyancy load of the ice. Analytical methods do not provide accurate determinations of tube loads and tube strengths, and yet tube size and tube support configurations exert considerable influence on overall costs. The Phase II designs are based on optimistic load and strength assumptions in the interest of low cost, and these assumptions may require verification by experimental evaluations.

For concepts ORNLFF and SWPL, substantial cost increments are associated with tank covers, which in the strictest sense are "nonfunctional". The covers were designed to withstand external loads of 50 pounds per square foot or more. This capacity will not accept appreciable earth cover, but is adequate for a number of domestic uses.

A substantial cost increment is also associated with the elastomeric coating used to waterproof the walls of the precast tank modules of the UTLBX concept. The requirement for this coating is perhaps only statistical, and might also be the subject of experimental evaluation.

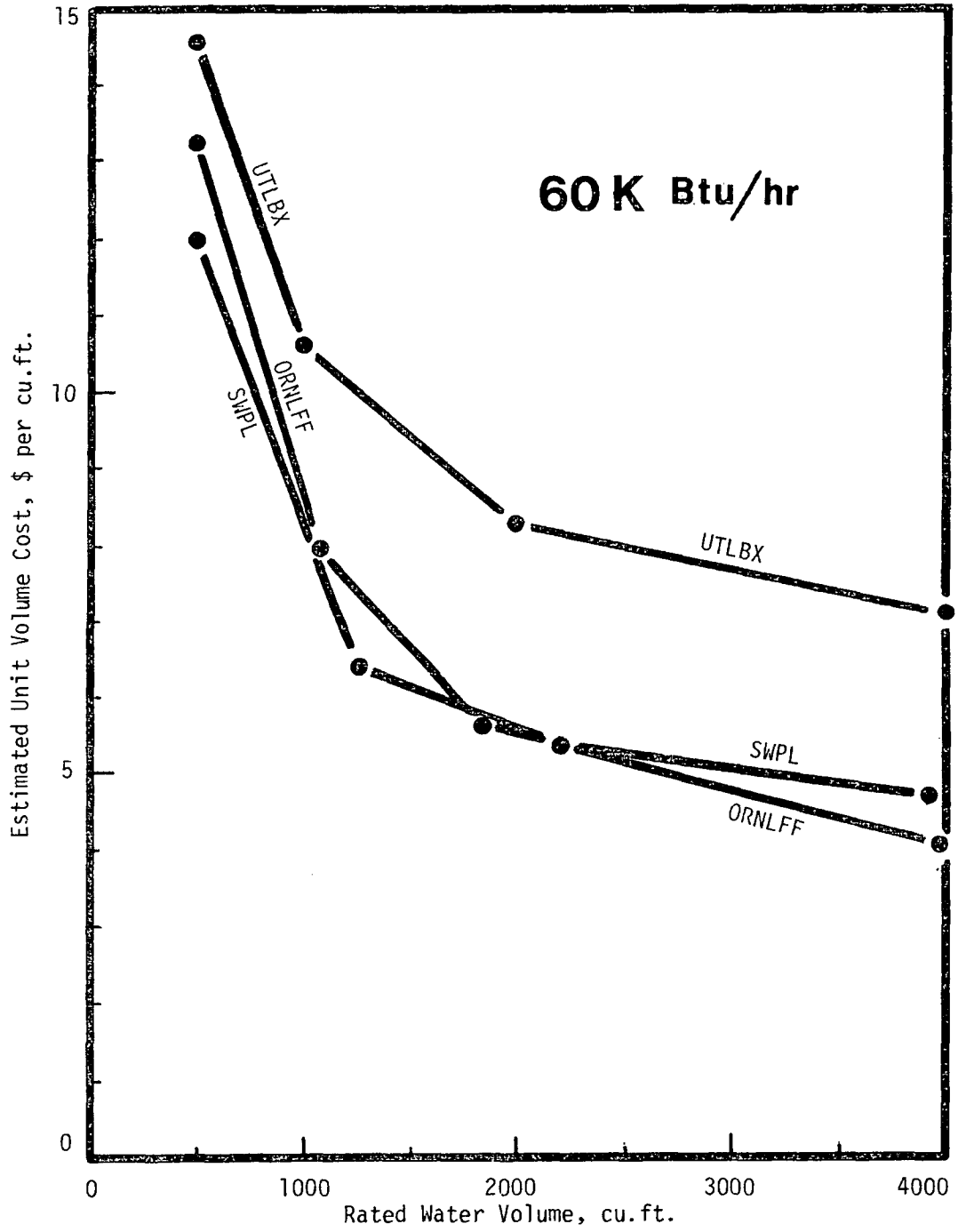

FIGURE 8. UNIT VOLUME COSTS OF 3 TANK CONCEPTS, FREE STANDING, 60,000 BTU PER HOUR HEAT RATE

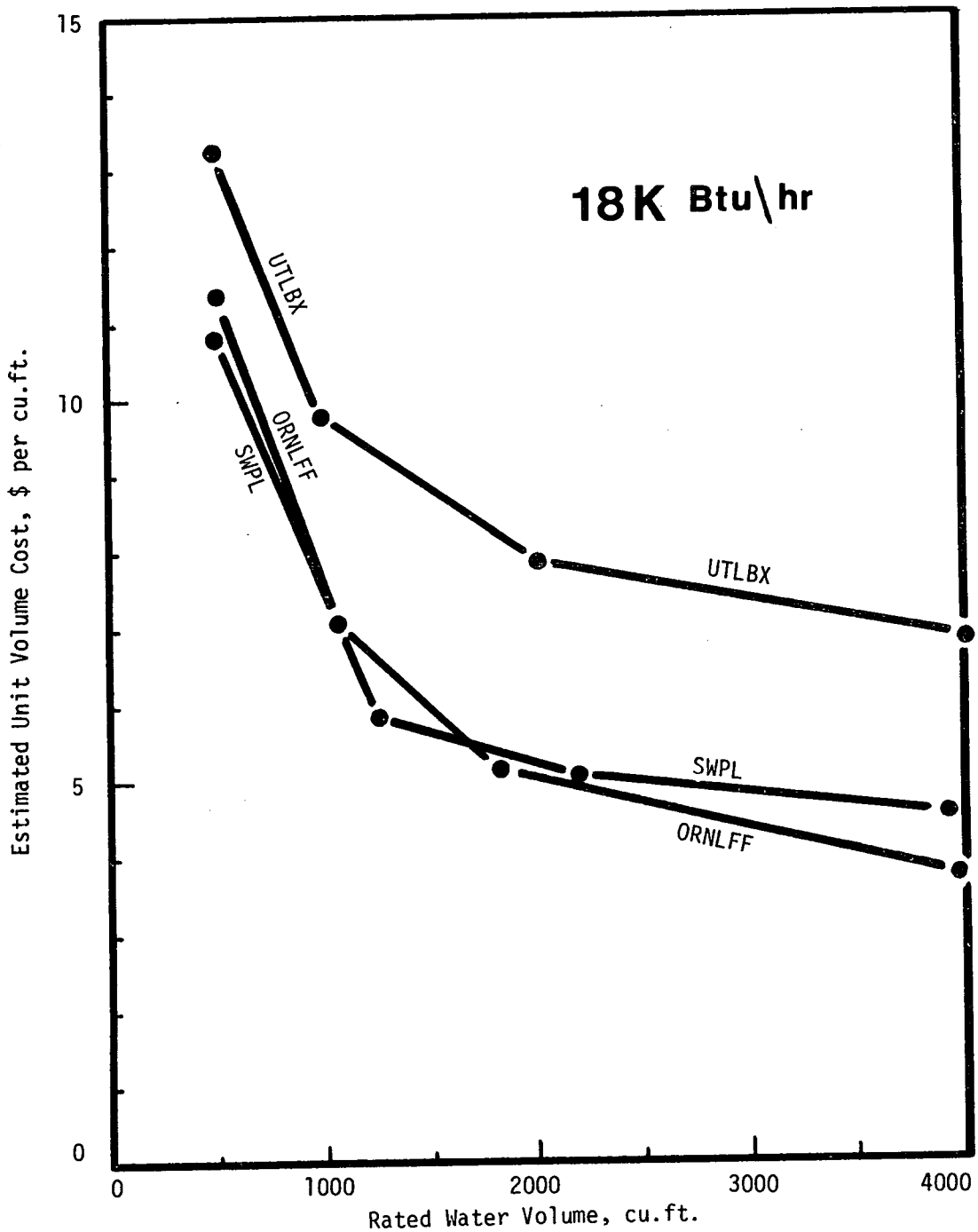

FIGURE 9. UNIT VOLUME COSTS OF 3 TANK CONCEPTS, FREE STANDING, 18,000 BTU PER HOUR HEAT RATE

CONCLUSIONS - PHASE II

From the detail design work and investigations of Phase II, the following additional conclusions are formed:

(1) The estimated costs for ORNLFF and SWPL energy storage assemblies are not significantly different except for large tank volumes, where ORNLFF is lowest.

(2) The estimated costs for UTLBX energy storage assemblies is substantially greater for all sizes, although the difference diminishes for small sizes.

(3) The favorable quality control of the pre-fabricated UTLBX concept and its ability to support substantial earth cover are offset by substantial delivery and placement costs.

(4) The ability of thin-walled heat exchanger tubes to withstand loads and stresses of this application are not readily established, and may ultimately influence overall costs significantly.

(5) For free-standing assemblies the structure required to cover the tank, although "nonfunctional", is a major cost factor. This factor alone can affect the cost-ranking of the concepts.

RECOMMENDATIONS - PHASE II

Based on the evaluations and findings of this program, Battelle suggests that ORNL consider in detail the following aspects of ACES energy storage assemblies.

(1) Experimental evaluations should be made to determine the effective strength of heat exchanger tubes in resisting static buoyancy loads and impacts from dislodging ice chunks.

(2) Further consideration should be given to the practical implications in ACES applications of:

   (a) In-service degradation in R-factor of insulations of lowest initial cost.

   (b) Less than absolute water-tightness.

(3) For the ORNLFF concept, consideration should be given to using walls of greater height than originally contemplated, in order to obtain a more favorable surface area/volume ratio. The reductions in material cost and heat loss rate may justify the more difficult excavation and installation procedures that are required.

(4) In constructing prototype units, the detailed knowledge of specialized contractors should be utilized, particularly regarding the installation of:

   - Foam-Form® blocks
   - Membrane liners, and
   - Swimming pool walls.

RESEARCH APPROACH

For Phase II, the major activities consisted of the following consecutive steps:

- Identification of preferred concepts
- Detailed analyses of selected concepts
- Identification of capable manufacturers and suppliers
- Preparation of drawings and instructions
- Cost estimation.

Identification of Preferred Concepts

On January 20, 1981, the Phase I results were reported to ORNL in the interim report which forms the first section of this summary report. After review of the information, ORNL identified three concepts for Phase II detail design, which were:

(1) ORNLFF - The reference concept which uses a special modular foam block, filled with concrete at the site.

(2) SWPL - A concept which uses swimming pool components to build in-ground tanks.

(3) UTLBX - A concept which uses precast concrete modules for tank walls.

Detailed Analysis of Concepts

For each of the concepts chosen, detailed computations were made to establish the configurations, materials, and methods to be used. Arrangements and structures were conceived and evaluated in terms of cost, load-carrying ability, and expected durability. Permutations arising from the independent variables of water volume and heat rate were computed and tabulated. Consideration was given to the external load level that should be provided in an exposed surface deck, and a value of 50 pounds per square

foot was established as a reasonable minimum. As each component was selected there was brief but aggressive consideration for lower cost alternatives. In this manner the general arrangements were progressively formulated and finalized.

Identification of Potential Suppliers

Although general determinations had been made in Phase I as to available materials and components, additional information was sought to further assure that favorable selections were made. For heavy materials it was determined that these would be available at frequent distance intervals throughout the nation, and in the quantities required. Brief comparisons of features and costs of competitive products were made. Also, in the case of the large precast concrete modules, a principal user, Bell Laboratories, was consulted.

Typical suppliers of products and services applicable to these concepts appear in Appendix E.

Preparation of Drawings and Instructions

Drawings were prepared for each of the concepts, with tabulations to indicate the dimensions, capacities, and instructions to be used in constructing assemblies of required water volumes and heat rates. To the extent practical, specifications and possible sources were indicated in a parts list format.

Sequential instructions were written for the procedures necessary in installing the energy storage assembly, for each concept. These procedures appear in Appendix D.

Cost Estimation

For each of the three concepts, cost estimates were prepared using the available tank sizes closest to the nominal volumes of 500, 1000, 2000, and 4000 cubic feet, with both the smallest and largest heat exchangers (18,000 and 60,000 Btu per hour).

To the extent possible, actual quotations, estimates, and published prices of potential suppliers were used. For other cost estimates the manuals of the Robert Snow Means Company, Inc.* were used.

It should be recognized that appreciable uncertainties can arise in this type of cost estimating. A considerable variation may eventually be expected in the overall cost quotations from different types of contractors, depending on their size and policies regarding overheads, wages, profit and markup of material costs. Also, for the precast concrete tank modules there would be costs that must be amortized locally, such as one-time engineering and tooling costs and possibly continuing costs of tooling maintenance and storage. Some of these factors were considered to be beyond the scope of the program, and reasoned judgments were necessarily made. The cost estimates are believed adequate for the purposes intended, and can of course be refined when cost quotations are obtained.

The tabulations of cost estimates appear as Appendix C.

DISCUSSION OF CONCEPTS AS DESIGNED FOR PHASE II

General Design Characteristics

The reference report ORNL/CON-43 and the applicable work statement (RFP P1365) served as the basis for this investigation and design activity. The water volume and the heat transfer rates are to be considered independent variables, ranging from 500 to 4000 cubic feet and 18,000 to 60,000 Btu/hr, respectively.

It is perhaps axiomatic when designing structures for low cost that functional requirements be well defined and that design margins be kept small. Some aspects of the ACES energy storage assembly cannot be clearly established by analysis, and some load/stress calculations can only be approximated. In specifying the three selected assembly concepts, assumptions have been made, but for any specific application the following factors deserve further consideration.

- The actual temperature of the ice-forming surface, as ice inventory approaches the maximum and mineral concentration of the remaining water may become high

---

* (1) Building Construction Cost Data, 1980.
Building Systems Cost Guide, 1980.

- The load capacity and creep of ice
- The effect of ice chunks breaking free during the melting mode of operation
- The statistical probability for leaks, considering the unequivocal requirement for water tightness
- The acceptability of a large deck surface of "corrugated", galvanized steel.

These factors are discussed in the following discussions, and future refinements of judgment should be based upon experience that is well monitored.

Heat Rate

Minor adjustments in the heat exchanger computational methods of the ORNL report were mutually agreed to be advisable. As with most heat exchange computations, practice and theory may deviate substantially. Information was not found which would enable definitive computation of heat rates after the adjacent ice "logs" begin to merge, and this is assumed to be the design point (78 percent ice inventory at square lattice spacing) controlling the heat exchanger tube length, even though ice inventories up to 95 percent are desired. Experience may show the greater tube lengths or greater brine flow rate than indicated may be required.

It was noted that computations were not particularly sensitive to brine concentration and a 35 percent methanol brine was eventually considered a "standard". Also, so long as a turbulent flow pattern is assured the resistance to heat flow of the inner convective film is not significant, generally amounting to only about 3 percent of the total.

Durability

As specified, 20 years was considered to be the minimum goal for useful life. Corrosion of metal parts and similar attritional degradations of plastic and concrete parts would seem to be the primary threats to longevity, apart from any abrupt fracture of stressed parts, which is considered separately.

Corrosion

Corrosion of metal parts is influenced by the presence and intensity of such components as

- Oxygen
- Temperature
- Moisture, particularly wet/dry cycles
- Ionic materials in solution
- Dissimilar metals (galvanic action).

Within the insulated shell of the energy storage assembly the time-average temperature is favorable. The basic rate of chemical reaction at 32 F should only be half that at 50 F, which might be considered the time average ambient temperature in the applicable temperate zone. And although oxygen solubility of water increases as temperature is reduced, there is no turbulence or convection to promote substantial, continuous oxygen absorption by the water. Also, an oxygen scavenger such as sodium sulfite could be periodically used, if necessary. There is no wet/dry cycling which breaks the oxide film to intensify the corrosion rate.

With these factors considered, galvanized steel has been identified as a suitable low cost material, and extensive use has been made of it in the detailed design of the concepts. The common zinc thickness available from hot dipping (2 ounces per sq.ft.) has been specified for all critical components.

Degradation

Low temperature and absence of ultraviolet radiation from sunlight are favorable conditions for the important membrane liners of two of the Phase II concepts, if algae and bacterial growth can be controlled as assumed. Experienced swimming pool contractors express the belief that without the sunlight and mechanical abuse of ordinary applications, a 20-year life should be obtainable. On the other hand, concern was expressed that slight leakage can be expected in most pool liners after 3-4 years, of the order of 1/4 inch per day. The rate does not apparently accelerate and the cause may be

mechanical abuse rather than material property attrition, but such an event would have serious consequence for the proposed ACES monitoring system. The lowest cost commercial liner is 20 mil PVC. A 30-mil thickness is commonly available at extra cost and rugged, industrial tank liners could also be used.

Solvent welding is strongly recommended for plastic tube connections. This low cost method, properly executed, produces integral joints which are truly fused rather than adhesive bonded. In contrast, the use of push-on mechanical fittings with clamps (as with polyethylene piping) depends on sustained stresses in the materials, which can lead to eventual splitting of the tube along the extrusion knit line.

One of the Phase II concepts depends on concrete walls for water containment. Bare concrete was considered because of claims that the nature of the reinforced, vibrated concrete makes the permeability and leakage nil. However, in the interest of low cost, the thickness of the concrete walls has been reduced to a minimum consistent with proposed domestic applications. Yet plain water of unsaturated mineral content might eventually leach the cement from inside surfaces to a significant extent. For this reason and for the sake of assuring water-tightness even if hairline cracks develop, a fluid-applied neoprene coating has been specified for the interior concrete surfaces, at significant cost penalty.

Structural Strengths

To the extent possible, published load and stress ratings were used for all structural components. Heat exchanger tubing is discussed separately, below. For plain structural steel a working stress in tension, compression, or flexure was assumed to be 20,000 psi, with 12,000 psi assumed for shear. Concrete, except as specified otherwise, was assumed to have a 2000 psi compressive strength. Other capacities are variously stated at appropriate points of discussion.

Heat Exchanger

Basic Heat Transfer Characteristics

The design computations for the heat exchangers of this investigation are based on the methods used in the ORNL/CON-43 report (Section 4.3). The general equation for the heat extraction rate is:

$$H_{EV} = \frac{T_W - T_B}{R} \quad ,$$

where

H_{EV} = rate of heat extraction from the tank, Btu/hr, also necessarily equal to the heat rating of the system evaporator

T_W = temperature at the ice/water surface, where ice is forming, 32 F for pure water

T_B = mean bulk temperature of the brine medium, given as 15 F

R = overall resistance to heat flow.

The 32 F temperature at the ice surface could perhaps be questioned. With water of high mineral content there may be a progressive increase in the mineral concentration as the ice inventory increases, and the freezing temperature may consequently be depressed. However, as in most heat exchanger computations there is not sufficient accuracy to justify great refinements, and 32 F was assumed valid.

The elements contributing to the resistance are (1) the convective film at the tube interior surface, (2) the insulating resistance of the tube wall, and (3) the insulating resistance of the ice coating. Because ice is forming on the log surface with essentially no temperature gradient, heat transfer resistance due to an exterior convective film coefficient is not appropriate. Heat need not be convected away. For circular ice logs with the entire perimeter exposed to water, the theoretical heat flow resistance is of the following form:

$$R = \frac{1}{\pi \ell}\left[\underbrace{\frac{1}{h_i d}}_{\text{Inside Convective Film}} + \underbrace{\frac{\ln D_o/d}{2K_p}}_{\text{Tube Wall}} + \underbrace{\frac{\ln D/D_o}{2K_I}}_{\text{Ice Coating}}\right],$$

where

ℓ = total active length of heat exchanger tubing, ft

h_i = convective heat transfer coefficient at tube/brine interface, Btu/hr/sq.ft./F

d = inside diameter of tube wall, ft

D_o = outside diameter of tube wall, ft

D = maximum ice log diameter, also the center-to-center tube spacing, ft

K_p = thermal conductivity of tube wall, Btu/hr/sq.ft./F

K_I = thermal conductivity of ice coating, 1.29 Btu/hr/sq.ft./F.

This basic theoretical expression applies only so long as the entire log surface remains in contact with water. In the hypothetical case, with "square" lattice spacing and uniform ice coatings, the ice logs would begin to merge at 78 percent of ice inventory, beyond which the wet surface area of the log declines and the design computations become problematic. If tubes were to be spaced at the vertices of equilateral triangles rather than squares, the merging would occur at 91 percent total volume. However, in this case flat wall boundaries cannot be approached uniformly by such tube spacing and the actual volume fraction would be somewhat less than 91 percent. Moreover, the general accuracy of heat transfer computations and the accuracy of available, necessary parameters makes further computational precision only academic. For the purposes of this investigation, "square" lattice spacing is assumed and the critical design point (maximum heat transfer resistance) is considered to be where the ice logs just touch, theoretically (78 percent ice inventory).

In general, turbulent flow should be provided for efficient heat transfer, in which case the following expression is customary:

$$h_i d = .023\ k_f\ R_e^{0.8} \left(\frac{\mu c_p}{k_f}\right)^{0.4*} \qquad (\text{for } R_e > 2000)$$

and

$$R_e = \frac{dv\rho}{\mu}$$

where

k_f = thermal conductivity of fluid, 0.237 Btu/hr/sq.ft./F for 35 percent methanol/water solution, and not greatly influenced by brine concentration

R_e = Reynold's number

μ = viscosity of the fluid, lb/ft/hr

c_p = specific heat of the fluid, Btu/lb/F

v = mean velocity of the fluid, ft/hr

ρ = density of the fluid, lb/cu.ft.

d = inside diameter of tube wall, ft.

The velocity of the fluid is governed by the brine flow rate and the available cross-sectional area, as follows:

$$v = \frac{\dot{M}}{A\rho}$$

and

$$\dot{M} = \frac{H_{EV}}{c_p\ \Delta T}$$

and

$$A = N\ \frac{\pi d^2}{4} \quad ,$$

---

* Some authorities suggest an exponent of 0.3 for cooling and 0.4 for heating. If so, the convective resistance would increase approximately 50 percent for methanol brine, but this component remains minor.

where

$\dot{M}$ = mass flow rate of fluid, lb/hr, as provided by the brine pumping system

A = gross cross-sectional tube area available for brine flow, sq.ft.

ΔT = change in fluid temperature, given as 4 F (13 F inlet, 17 F outlet)

N = number of parallel branches available for fluid flow, as necessary to avoid excessive pumping power losses.

The maximum permissible pressure drop of the heat exchanger circuit was stated as 6 psi, which forms the following constraint:

$$L_{max} = \frac{2gd\,\Delta P_f}{f\rho v^2} = \frac{2gd\ (6 \times 144)}{f\rho v^2}$$

and

$$f = \frac{64}{R_e} \quad \text{(For } R_e > 2000 \text{ and smooth plastic surfaces)}$$

where

L = length of tube in each individual brine branch or circuit, ft, equal to ℓ/N

f = effective friction factor

g = acceleration due to gravity, 4.17×10^8 ft per hr^2.

Finally, for "square" lattice spacing of tubes, the water volume of the tank exerts an influence on the heat extraction rate through the ice coating thickness as ice logs just touch (theoretically) as follows:

$$D = \frac{1.09\ V}{\ell} \quad ,$$

where

V = rated volume of water, cu.ft., expanded by freezing to approximately 109 percent the initial volume.

Using these expressions, heat exchanger determinations were made. Because of interrelationships, iterative solution is necessary, with the following general results:

(1) Thermal conductivity of the tube wall is important only when it is significantly less than that of ice. There is no merit associated with high conductivity (as with metallic tubes) but significant penalty is associated with low conductivity.

(2) Tube size/length relationships favor generally small tubes of thin walls, as might be surmised, and tube structural strength, as discussed below, becomes of major importance.

(3) The effect of brine concentration is minor.

(4) The resistance of the inside convective film is minor, so long as turbulent flow is maintained.

Tube Material Comparisons

The logical choice for tube material, considering the primary objective of low overall cost, rests among the common thermoplastics used in extruded commercial pipe. A general comparison of pertinent properties of candidate materials can be made from Table 7. The data was collected from various sources and substantial inconsistencies became evident.

Also, thermal conductivity is not easily quantified and generally of little interest to most users and suppliers. A variety of compounding modifiers are used, with effects on properties such as conductivity and low temperature impact strength.

The most common plastic material for pressure piping is PVC Type I. Availability, low cost, and flexural strength are offset by low thermal conductivity and low impact strength at low temperatures (which may be critical if ice chunks dislodge and strike the piping).

Polyethylenes offer good impact strength and thermal conductivity but have low flexural strength. Moreover, the product form (semiflexible, coiled) is not readily manageable for ACES applications where straight,

TABLE 7. PROPERTIES OF COMMON PLASTIC PIPE MATERIALS

	ASTM Test	PVC Type I Normal Impact PVC 1120/PVC 1220	PVC Type I High Impact PVC 2110	CPVC CPVC 4120	High Density Polyethylene	Medium Density Polyethylene	Polypropylene	ABS
Resistance to Methanol/ Water Brine at 13 to 85 F	--	OK	OK	OK	OK	OK	OK	OK
Thermal Conductivity								
Btu/hr/ft/°F	C177	0.085	0.109	0.023	0.27	0.22	0.11	0.15
Ratio to Ice		0.065	0.084	0.018	0.21	0.17	0.085	0.12
Flexural Strength (Room Temperature), psi[a]	D790	15,000	11,500	15,600	3,700	2,800	8,500	10,000
Modulus of Elasticity in Tension (Room Temperature), psi	D638	400,000	320,000	423,000	120,000	70,000	150,000	310,000
Izod Impact; ft lb/ inch notch @ 32°F	D256	0.47	1.47	1.8	4.6	--	0.3	1.4
Bulk List Price of Base Resin, ¢/cu.in.[b]	--	1.6	1.6	5.4	1.6	1.5	1.4	2.1
Product Form	--	Straight, Rigid	Straight, Rigid	Straight, Rigid	Coiled, Flexible	Coiled, Flexible	Straight, Rigid	Straight, Rigid
Solvent Weldable	--	Yes	Yes	Yes	No	No	No	Yes

(a) Generally a strain, rather than fracture limit.

(b) Reference: Plastics Technology, March 1981.

parallel pipe runs are needed. Also, tube connections must be made mechanically (with clamps) or by heat welding; both approaches are judged less desirable in this application to solvent welding, which is low cost, dependable, and durable.

Polypropylene and CPVC have no outstanding properties to commend them for this application.

ABS suggests interesting possibilities, especially due to its high relative thermal conductivity and impact strength. However, ABS tubing is not as commonly available as PVC and will cost more per unit length, due to the basic cost of the resin and perhaps to a scarcity of willing suppliers.

Figures 10, 11, and 12 represent the basic interrelationships of heat rate, water volume, tube length, and number of branch circuits necessary, as computed from the foregoing methods, for three appropriate thermal conductivities, for a favorable pipe size, and for a 35 percent methanol brine concentration. In all cases the flow is turbulent ($R_e > 2000$) and the pressure drop does not exceed 6 psi.* The primary heat flow resistances derive from the tube wall and the ice coating, while the inner convective film is of minor importance. Note that the effect of Reynold's number is not severe. For a given volume, as heat rate increases and the pressure drop increases so that an additional branch circuit must be added, a step increase in length is only of the order of 10-20 feet, or not more than approximately 2 percent.

---

* The pressure drop is found to be largely due to tube length, rather than elbow bends, but in this application it is also very sensitive to the actual tube ID (proportional to $d^{4.75}$). Tube is usually specified by OD and wall thickness, and the bore can theoretically be much below nominal. On the other hand, the manufacturer wants to conserve material and is not likely to provide maximum wall thicknesses. Also, a considerable range of pressure drop is predicted among the various heat exchangers, up to 6 psi nominal. Thus the pressure/flow rate characteristic of the brine pump must be considered for proper flow rate.

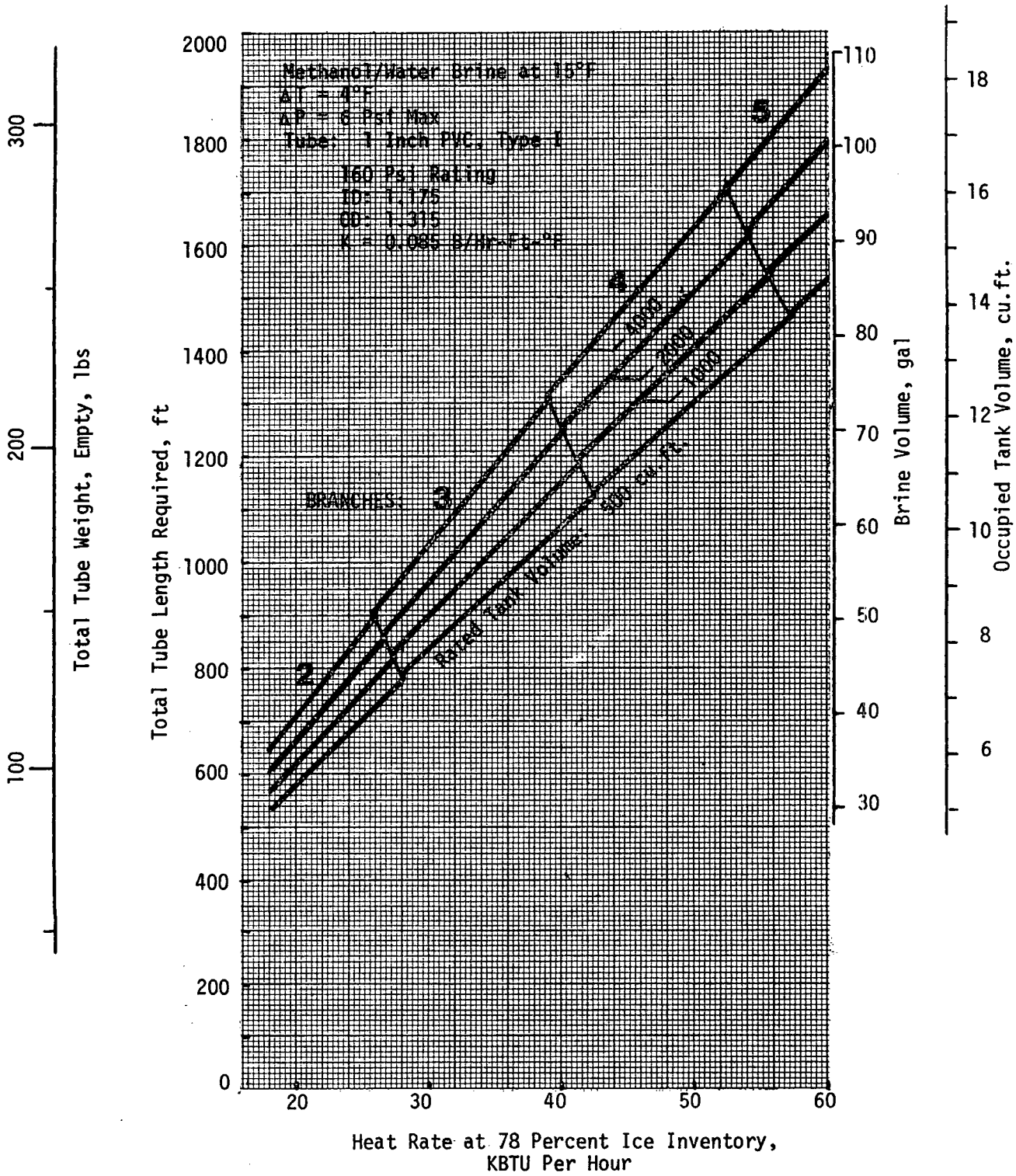

FIGURE 10. RELATIONSHIP OF HEAT TRANSFER RATE, TANK VOLUME, AND HEAT EXCHANGER TUBE LENGTH - PVC TUBE

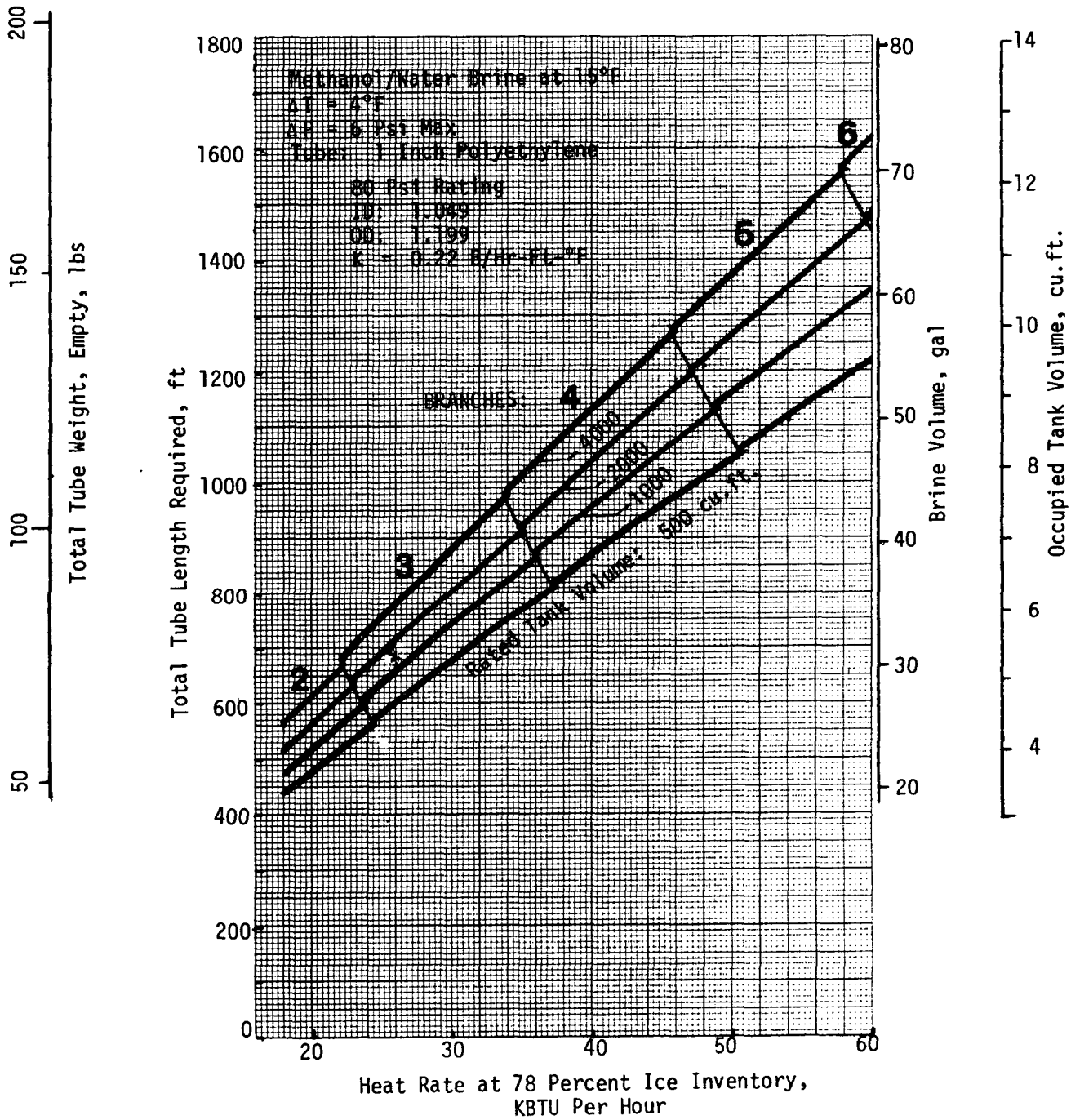

FIGURE 11. RELATIONSHIP OF HEAT TRANSFER RATE, TANK VOLUME, AND HEAT EXCHANGER TUBE LENGTH - POLYETHYLENE TUBE

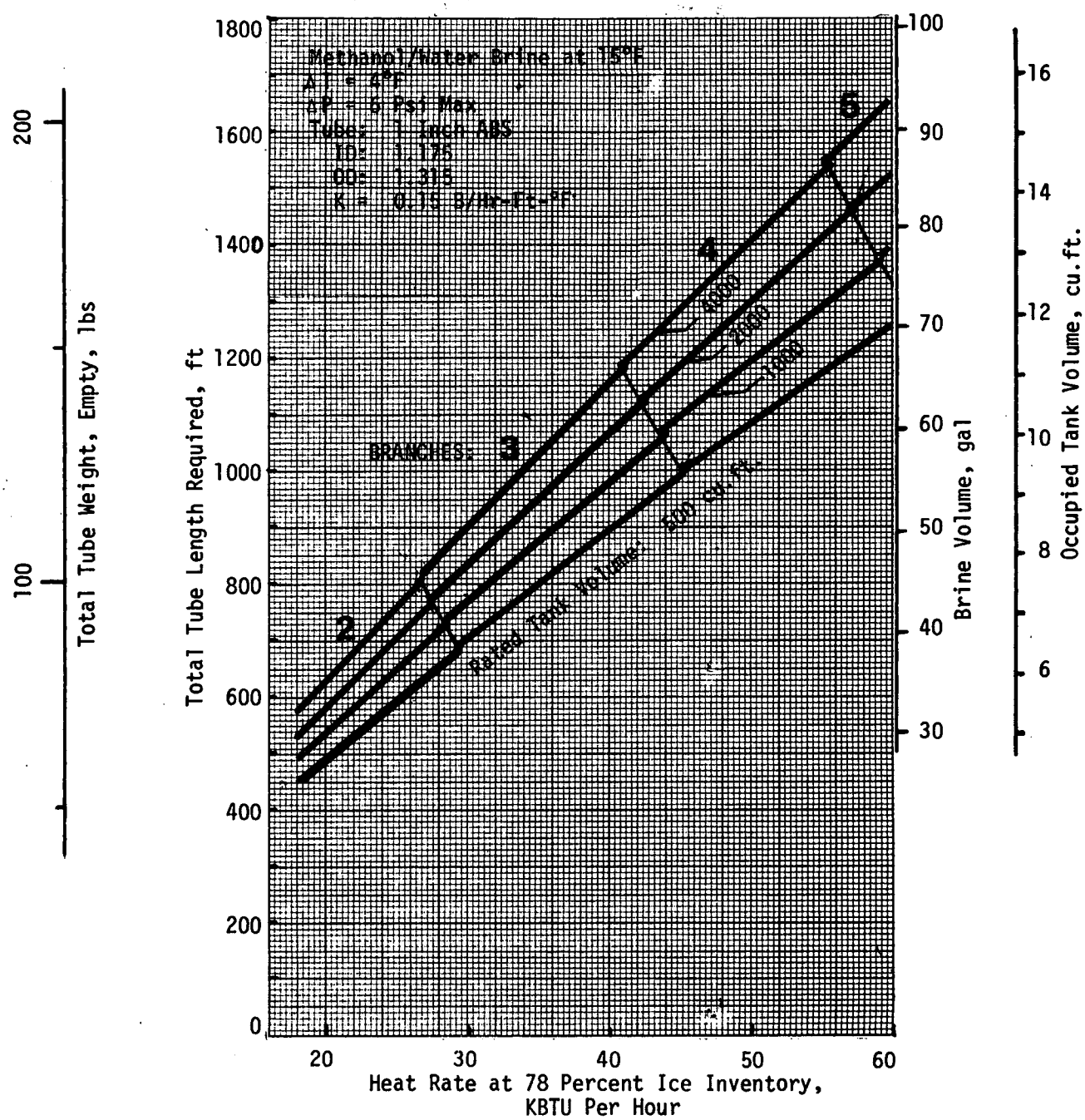

FIGURE 12. RELATIONSHIP OF HEAT TRANSFER RATE, TANK VOLUME, AND HEAT EXCHANGER TUBE LENGTH - ABS TUBE

A comparison of the figures shows that the polyethylene (PE) and ABS tubes can be substantially shorter than the more common PVC tube. For example, for a 2000 cubic foot rated water volume and a 40,000 Btu/hr heat rate, the theoretical total tubing lengths required for PE, ABS, and PVC are, respectively, 1040, 1070, and 1240 feet. Also the brine volume within the tubes are 47, 60, and 70 gallons, respectively. The tank volume occupied by the heat exchanger is in no case greater than 3 percent, and may therefore be neglected.

Commonly available rigid PVC appears the most logical material choice, in spite of the greater lengths needed. The common availability, strength, and solvent weldability are believed to yield the greatest cost effectiveness and reliability. Lengths of heat exchanger tubes specified in the Phase II detail designs are based on the (lower) conductivity of the common PVC grade, material designations PVC 1120 and PVC 1220. A decision to substitute high impact grade PVC 2110 with its higher conductivity (1.28 ratio) could provide a conservative design margin, or all specified lengths could be reduced approximately 10 percent.

To aid in the necessary interpolations for Phase II design, Figure 13 was prepared, which is merely a revised expression of Figure 10, with "best fit" lines and a continuum of water volume rather than heat rate.

Tube Strength Under Buoyancy Loads

As ice forms on tube surfaces, considerable buoyant forces are developed. These forces must be transmitted to the tank structure so that the heat exchanger does not progressively lift itself out of the water and so that the water level change can be monitored for indication of the ice inventory fraction. Although vertical heat exchanger tubes were considered in some Phase I studies, the important concepts now depend on horizontal tubes, which consequently require consideration of tube bending strength.

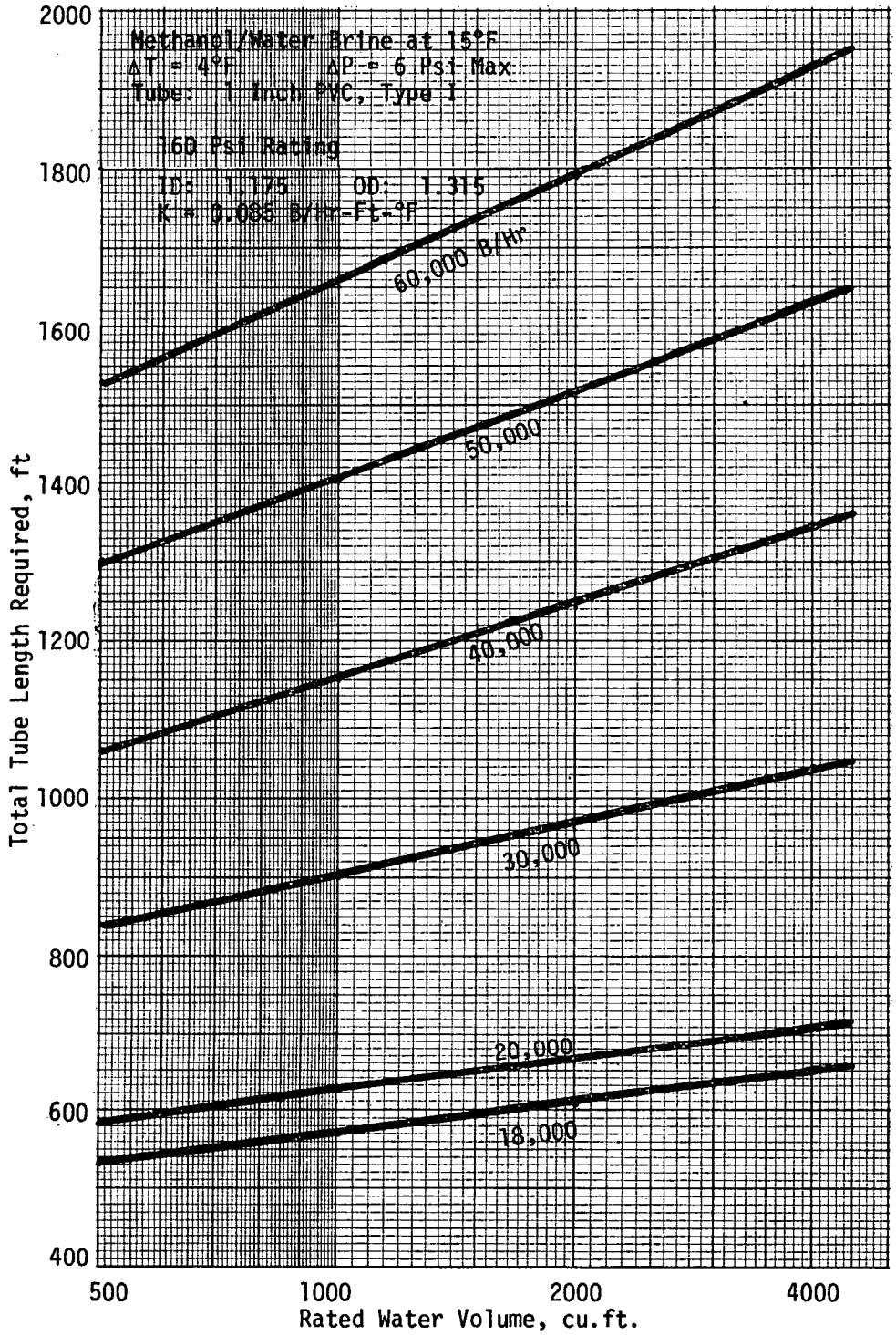

FIGURE 13. TUBE LENGTH REQUIRED FOR VARIOUS HEAT RATES AT 78 PERCENT ICE INVENTORY - PVC TUBE

The simplest basic situation is shown below, where an ice coated tube is held by two restraints. The unit loading (buoyancy) is proportional to the ice volume. If the ice log is assumed capable of carrying a sustained load, considerable beam strength is available, because the buoyancy load increases only in proportion to D_o^2 while the section modulus increases in proportion to D_o^3. However, ice is subject to creep, especially near 32 F.

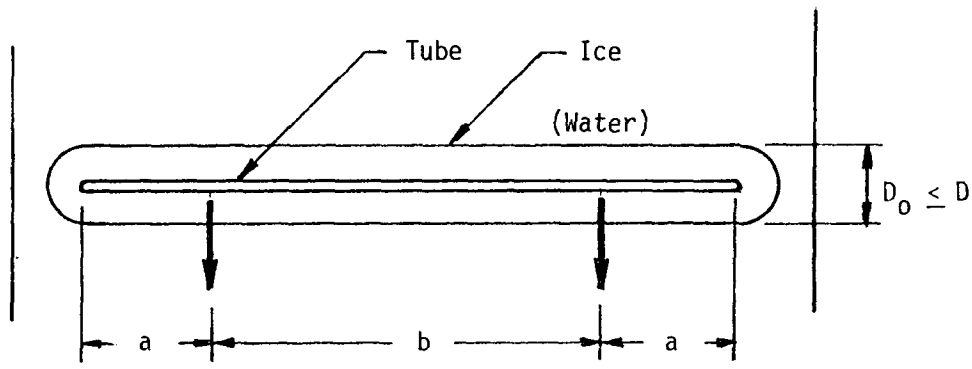

A most conservative design approach would be to assume that the tube must resist all bending moments. Consider the selected 1-inch PVC tube, which has the following properties:

Section Modulus: 0.064 $inch^3$

Flexural Strength: 11,500 psi (room temperature, ASTM D790).

For a maximum working stress of 7500 psi, the maximum applied moment should not exceed 40 ft lbs. For the situation shown the maximum bending moment for the cantilevered end can be expressed as follows. (The bending moment at the center will be less until dimension "b" exceeds 2.8 times dimension "a". For designs with more than two supports, this ratio declines toward 2.0.)

For the cantilever:

$$M = \frac{wa^2}{2}$$

and

$$w \approx \frac{\pi}{4} D_o^2 \left(62.4 - \frac{62.4}{1.09}\right) = 4 D_o^2 \quad ,$$

where

M = the applied bending moment, ft lbs

w = the uniform unit load, lbs/ft

a = the effective overhang, ft

D_o = the outside diameter of the ice log, ft.

Resulting in:

$$a_{max} = \frac{\sqrt{\frac{M}{2}}}{D_o}$$

which for M = 40, as computed above, results in:

$$a_{max} = \frac{4.5}{D_o}$$

The actual loading would be somewhat greater than calculated, because of the horizontal section of the ice-coated pipe which must run transverse to the main pipe to reach the next run. This represents an additional concentrated load at the main pipe's end. The effect of this additional load can be taken into account by regarding the length of pipe outside the support as the distance to the tank wall, which is greater than the actual pipe length.

From Phase II data the tube spacing (and thus D_o) can be seen to range from roughly 0.7 to 2.7 feet, with an average of roughly 1.25 feet. Thus for the tube to carry the entire bending load the maximum permissible overhang would average 3.6 feet, and decline to as little as 1.7 feet. On the other hand, with the important factor of creep neglected, ice is capable of supporting roughly 200 psi* in flexure. If such stress level could be depended on, the critical minimum overhang might be postulated to be roughly 4 feet, as shown below.

---

* Review of the Properties of Snow and Ice, University of Minnesota, Institute of Technology, Engineering Experiment Station, July 1951.

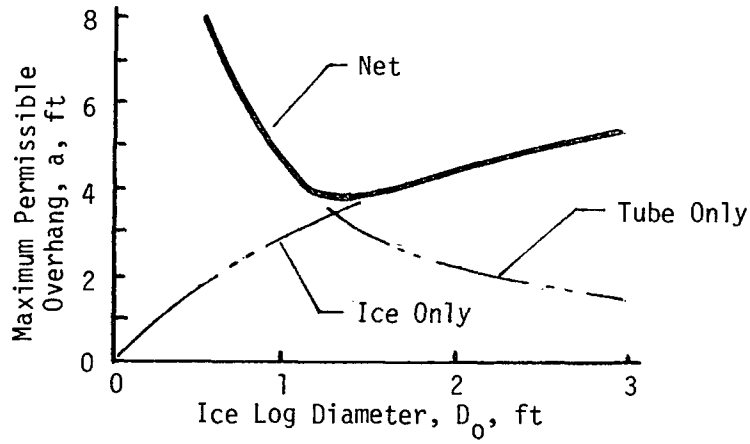

For low cost, it is important that the tube supports not be overdesigned. In the Phase II designs, optimistic tube support overhangs and spans have been chosen. Ultimately it may be necessary to determine experimentally the support distances that are permissible and, if necessary, (1) reduce the distances and spans, (2) increase the tube size and consequent section modulus, or revert to metallic tube materials.

An optimistic approach has also been taken in regard to the shear and contact stresses of tubes due to ice loads. It is assumed that a large part of the ice load is transmitted directly to the support structure rather than through the tube itself. This assumption may have various degrees of validity among the Phase II concepts, depending on the particular nature of the tube support systems, as will be discussed further.

Implementation of Design Equations

The foregoing computations allow the required tube length and tube spacing to be determined, given the heat rate and water volume, but implementation of the values generally requires compromise. Seldom will the "D" value result in integer numbers of layers or columns of tubes, yet integer values are generally needed. Also, the number of parallel tube runs influences the configuration of the branching circuitry. The cost of the generally larger supply and return piping must be considered and the individual branch circuits must offer equal resistance to brine flow to obtain the desired heat transfer rate.

Each of the concepts has descriptive drawings and tables which show the chosen tube spacing intervals and the number of runs in the brine circuit branch. These values were chosen in the following manner:

(1) For the desired water volume and heat rate the total tube length was determined from Figure 7.

(2) For the desired length the resulting equivalent number of tube runs that are needed in each branch circuit was determined, as follows:

$$n = \frac{A}{D^2 N} = \frac{A\ell}{1.09\ VN} \quad ,$$

where

A = final, expanded area of the water cross-section, transverse to the tube axes, sq.ft.

ℓ = total length of tubing desired, ft

V = rated water volume, cu.ft.

N = the number of branch circuits indicated by Figure 10*.

(3) The resulting "n" value was rounded to a desirable value as follows:

(a) No reduction greater than 5 percent was allowed.

(b) Even integers were most favored, because supply and return connections can then be adjacent.**

(c) For 2 and 4 branches, an "n" value consisting of an odd integer plus 1/2 (i.e., 17-1/2) was considered favorable, because one underwater run can then be shared by two circuits, and the supply and return connections can then be adjacent.

---

* Subsequent adjustments to tube length may cause slight pressure drop increase. If the number of circuits is initially close to the next higher number, the next higher number should be used.

** The schematic flow paths are illustrated by the heat exchanger drawings of the Phase II concepts.

(d) An odd integer was considered acceptable for 3 branches or less, requiring that supply and return connections be at opposite ends of the tank. [For 4 branches or more, the added (large diameter) pipe run is better replaced by the small runs necessary to obtain an even "n" value.]

(4) After choosing a final "n" value (runs per branch), the adjusted equivalent tube length ℓ and tube spacing D were computed.

(5) Where appropriate, the resulting D-value was used to determine adjusted vertical and horizontal spacings (D_v and D_h) which would best supply integer numbers of layers and columns of tubes, to obtain the total number of runs required.

Obviously, departures from the ideal "square" tube spacing are necessary, and the degrees of nonuniformity can best be seen from the tabulated values on the detail drawings of the concepts. It is, of course, most severe at large tube spacings. However, tubing could be added in such configurations at little additional cost, if so desired, to more certainly assure desired heat rate.

Concept ORNLFF

The ACES tank concept reported in ORNL/CON-43 is designated ORNLFF for the purposes of this report. Only minor changes and additions have been made to the design as envisioned in the ORNL report, and the selected configurations appear in detail as Battelle drawing ORNLFF-3481 (two sheets).

Phase II Design Features

The design features envisioned in the ORNL report served as the basis for the Phase II detailed design, with one notable exception: the tube support structure, as discussed below.

Basic Tank Dimensions. In discussion with ORNL staff and contractors it was initially agreed that excavations should not be much greater than 8 feet, so that common work practices and equipment could be utilized. For conservation of wall materials alone, of course, a cube is desirable, which would require wall heights up to 18 feet. As a reasonable compromise, a wall height of 7 block modules (9' 4") is used throughout. Two-foot increments of outside wall dimension have been selected.

Ideally the ballast and auxiliary insulation should not be placed within the tank walls, because of the incurred cost ($20 per block unit, finished). However, attempts to provide an R-40 insulating rating and reasonable structural integrity with an external ballast and insulation arrangement were not successful, because of difficulty in insulating the necessary wall footer.

In the preliminary design considerations of Phase I, pilasters for long length walls were believed necessary. Later investigations indicate that none are needed for the length/height combinations considered here.

Ten tank sizes have been selected to span the required range of volume, as indicated on the detail drawing.

Liner. In discussions with a supplier of polystyrene insulation, it was found that flexible polyvinyl film will often "attack" the styrene, and it is customary in the building trades to apply kraft paper for physical separation. Although a paper material might be used here, a polyethylene film was selected for durability under moist conditions.

In the ORNL report a layer of sand was considered for protecting the liner during placement of the concrete ballast. It would seem that a substantial thickness of sand would be required to offer adequate protection and that two layers of asphalt building paper would not only be less wasteful of tank volume but also would provide for side wall protection.

For attachment of the upper edge of the liner, the "snap-in" arrangement commonly used in swimming pool construction is selected. An aluminum extrusion receives the liner edge feature and distributes the applied load to the insulation at an acceptable stress level. The elevation of the liner edge provides for a theoretical margin of 1.3 inches above the ice/water level at 100 percent ice.

Tube Support Structure. Anchoring the heat exchanger tubes to the ballast is of significant importance in both cost and performance considerations. The spacing of tube supports, which is necessarily interrelated with tube size (section modulus), is governed in this concept by the positions of the joints of deck sections, and chosen intervals do not exceed 68 inches. As a result, the median number of cables is found to be 50, with roughly 250 tube attachments to be accomplished. Therefore the attachments must be reliable and of low labor intensity. Although ORNL experience with plastic ropes has been satisfactory, stranded stainless steel cable is selected, for the following reasons:

(1) The axial stiffness of the wire cable will maintain tube positions without cable pretension, and strong ceiling attachments are not required.

(2) Prefabricated wire loops and swaged attachments for tube support are strong, reliable, and quickly placed.

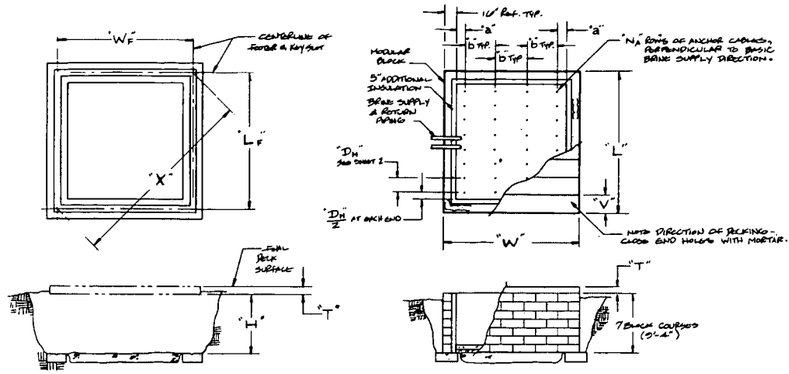

TANK SIZE				FOOTER DIMENSIONS			LINER DIMENSIONS (INSTALLED)			DECK		ANCHORS		
BASE WORK VOLUME CU. FT.	BASIC EXTERIOR DIMENSIONS											ROWS	SPACING	
	W	L	H	W_F	L_F	X	W_L	L_L	H_L	T x V	BASIC LOAD CAPACITY, PSF ①	N_A	a	b
520	12'	12'	9'-4"	11'-1"	11'-1"	15'-8"	10'-2"	10'-2"	7'-6"	6"x24"	>180	2	2'-4"	4'-0"
780	14'	14'		13'-1"	13'-1"	18'-6"	12'-2"	12'-2"			180	2	2'-10"	5'-8"
1080	16'	16'		15'-1"	15'-1"	21'-4"	14'-2"	14'-2"			127	3	2'-6"	4'-0"
1440	18'	18'		17'-1"	17'-1"	24'-2"	16'-2"	16'-2"			91 ② (TO 256)	3	2'-8"	5'-0"
1840	20'	20'		19'-1"	19'-1"	27'-0"	18'-2"	18'-2"			70 (TO 187)	3	3'-0"	5'-8"
2300	22'	22'		21'-1"	21'-1"	29'-10"	20'-2"	20'-2"		8"x24"	113	4	2'-3"	4'-10"
2800	24'	24'		23'-1"	23'-1"	32'-8"	22'-2"	22'-2"			90 (TO 224)	4	2'-8"	5'-4"
3350	26'	26'		25'-1"	25'-1"	35'-6"	24'-2"	24'-4"			66 (TO 165)	4	2'-11"	5'-10"
3940	28'	28'		27'-1"	27'-1"	38'-4"	26'-2"	26'-2"		10"x28" ③	90	5	2'-8"	5'-0"
4270	28'	30'		27'-1"	29'-1"	39'-9"	26'-2"	28'-2"		10"x28" ③	75 (TO 116)	5	2'-8"	5'-0"

① — BASIC LOAD CAPACITY FOR UNCAPPED SLAB WITH LOWEST STANDARD LEVEL OF PRESTRESSING AND WITHOUT CUT OPENINGS.
② — INDICATES MAXIMUM AVAILABLE CAPACITY, WHICH REQUIRES EXTRA LEVELS OF PRESTRESSING.
③ — FIRST & LAST SECTION LAID WITH 2" OVERHANG RATHER THAN FLUSH WITH WALLS.

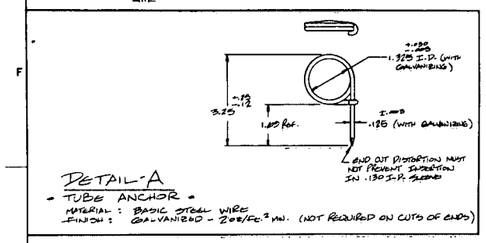

DETAIL-A
- TUBE ANCHOR -
MATERIAL: BASIC STEEL WIRE
FINISH: GALVANIZED - 2oz/FT.² MIN. (NOT REQUIRED ON CUTS OF ENDS)

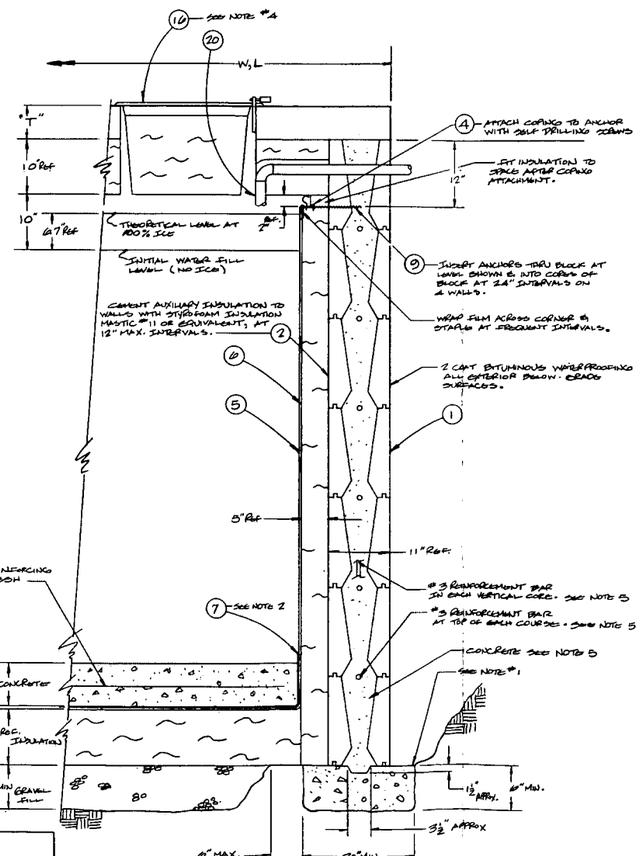

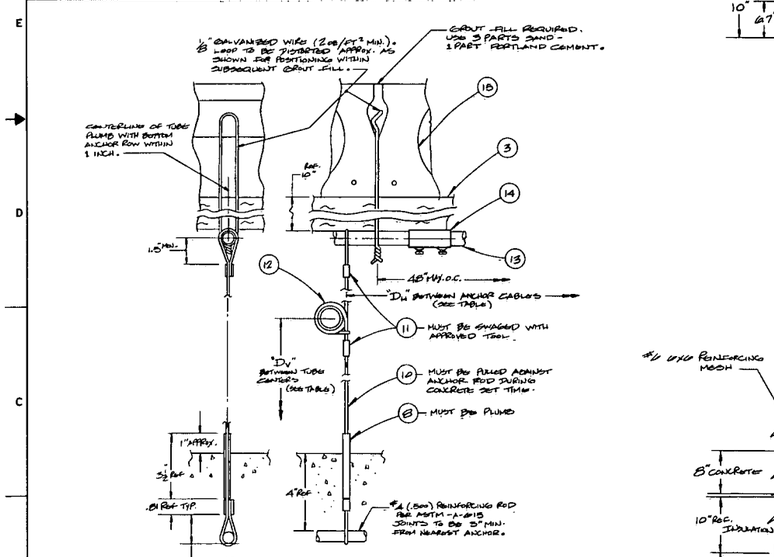

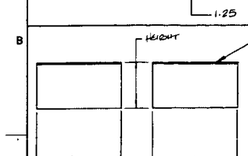

IDENTITY CODE	REFERENCE CAPACITY	INSTALLED DIM'S INCHES		
		HEIGHT	WIDTH	LENGTH
1212	520	82	112	112
1414	780	82	136	136
1616	1080	82	160	160
1818	1440	82	184	184
2020	1840	82	208	208
2222	2300	82	232	232
2424	2800	82	256	256
2626	3350	82	280	280
2828	3940	82	304	304
2830	4270	82	304	328

DETAIL - B
- LINER -

30 MIL UNREINFORCED FILM OF VIRGIN PVC RESIN
MINIMUM FILM PROPERTIES:
0.027" MIN. THICKNESS.
2200 PSI MIN. TENSILE STRENGTH,
300% MIN. ELONGATION PER ASTM-D-882.
MINIMUM 20°F IMPACT COLD CRACK TEMP. PER ASTM-D-1790

NOTES:

1. IF EARTH IS TO BE USED AS A FORM, THE BOTTOM MUST BE FLAT AND THE BOTTOM CORNERS MUST BE SHARP.
2. LAY PAPER IN SHIPLAP FASHION WITH 50% MINIMUM OVERLAP (TO OBTAIN TWO FULL LAYERS). DIRECTION OF LAP SHOULD CONSIDER LIKELY DIRECTION OF SUBSEQUENT CONCRETE FLOW DURING PLACEMENT.
3. SHEARS TO BE SHARPED WITH PROPER TOOL (SOURCES: SAVA INDUSTRIES AND LOOS & CO.) TO OBTAIN STRENGTH REQUIRED.
4. PROVISION MUST BE MADE FOR LOCKING HATCH COVER, EITHER AT SURFACE OR WITHIN.
5. RECOMMENDATIONS OF BLOCK MANUFACTURER (ITEM 1) AS TO CONCRETE & STEEL REQUIREMENTS MUST BE FOLLOWED - MIN. CONCRETE STRENGTH: 2500 PSI MAX. AGGREGATE SIZE: ⅜ INCH

ITEM	DESCRIPTION	MAT'L / SPEC	POSSIBLE SOURCES	NOTE NO.
22	COUPLING-CONDUIT	¾" THIN WALL CONDUIT COUPLING	LOCAL ELECT SUPPLY	
21	SUPPORT TUBING	½" THIN WALL CONDUIT	LOCAL ELECT SUPPLY	
20	TUBING - FLEXIBLE	SCH 40: NEOPRENE - 1/16" WALL PER ASTM D-2000 OR SARAFLITE 130 PVC (WHITE) 1½" 2" OR 2½"	MINOR RUBBER CO. INC. PACIFIC-ECHO CO.	
19	TUBING - RIGID	PVC TYPE 1, 1" 160 PSI RATING (1.315 O.D., 1.175 I.D.) PER ASTM D-2241	CHARLOTTE PLASTICS CLEGLINE PLASTIC PIPE CO. HARSEL PLASTIC INC. PLASTIC NAT'L PRODUCTS BOCCHER PLASTIC PIPE CO.	
18	PIPE FITTINGS	PVC SCH 40 PER ASTM D-2466	AS PER ITEM 19 OR LOCAL PLUMBING SUPPLY	
17	NET-RESTRAINT	NYLON OR POLYESTER FISH NET - 2" MESH SIZE	FABLICK MILLS (914) 946-2460 MID LAKES MFG (TITUS 424)	
16	HATCH COVER	PATTERNED STEEL FLOOR PLATE 3/16" MIN. THICK GALVANIZED	LOCAL STEEL SUPPLY	4
15	DECK	PRECAST, PRESTRESSED CONCRETE PER ACI 318-71	FLAVICRETE BY PARKER PRODUCTS OR "DYCORE" BY VIBRAN SERVICES CORP.	
14	COUPLING	½" THIN WALL CONDUIT COUPLING	LOCAL	
13	SUPPORT TUBING	½ INCH THIN WALL CONDUIT (.780 O.D., .020 MIN. WALL)	LOCAL	
12	TUBE ANCHOR	SEE DETAIL A	LOCAL OF HECKMAN BLDG PROD OR AA WIRE PRODUCTS CO.	
11	SHACKLE - OVAL	ALUMINUM FOR 1/8 CABLE	SAVA INDUSTRIES INC (PN 793A) OR LOOS & CO.	3
10	CABLE - ANCHOR	1/8 DIA. STAINLESS STEEL 7x7 VARIVE	SAVA INDUSTRIES INC (PN 3129) OR LOOS & CO.	
9	TIE - CORRUGATED	7/8 x 1 x 22 GA. GALV. STEEL CORRUGATED	HECKMAN BLDG PRODUCTS (SIMILAR TO PN 2200) OR LOCAL	
8	TUBE - PLASTIC	3/8 OD x 1/16 WALL x 3½ LONG POLYETHYLENE	HECKMAN BLDG PRODUCTS (PN 390) OR LOCAL	
7	SHIELD	15 LB ASPHALT PROOFED PAPER	LOCAL BLDG SUPPLY	2
6	INTERLINER	4 MIL POLYETHYLENE FILM	LOCAL BLDG SUPPLY	
5	LINER	SEE DETAIL B	MAGIC POOL EQUIPMENT CORP. OR STAFF INDUSTRIES	
4	COPING - RIM LOCK	ALUMINUM - 2" MAX. HEIGHT	MAGIC POOL EQUIPMENT CORP.	
3	INSULATION - POLYSTYRENE	10"x48" 1 LB/CU.FT. DENSITY (UP TO 12' LENGTH AVAILABLE)	GILMAN BROTHERS	
2	INSULATION - POLYSTYRENE	5"x48" 1 LB/CU.FT. DENSITY (UP TO 12' LENGTH AVAILABLE)	GILMAN BROTHERS	
1	MODULAR POLYSTYRENE BLOCK	11" WIDTH (8" CORE)	FORM-FORM CANADA, LTD.	

PARTS LIST

APPLICATION			
THIS ITEM IS USED ON SUBASSEMBLIES			
DRAWING NO.	REQ. PER	NO. OF ABOVE	TOTAL
TO MAKE FINAL ASSEMBLY			TOTAL REQ'D

DO NOT SCALE DRAWING
UNLESS OTHERWISE SPECIFIED DIMENSIONS ARE IN INCHES. TOLERANCES ARE:
.XX = .XXX =
.XXX = ANGLES =
MATERIAL AND TREATMENT

SIGNATURE	DIV	DATE
DRAWN	649	3-19-81
CHECKED		
ENGINEERING APPR.		
APPR.		
APPR.		
PROJECT APPR.		
SPECIAL APPR.		

Battelle
Columbus Laboratories
505 King Avenue, Columbus, Ohio 43201, Telephone (614) 424-6424

TITLE: ENERGY STORAGE ASSEMBLY FOR ACES SYSTEM

SIZE	CODE IDENT. NO.	DIV. NO.	DWG. NO.	REV
E	79986	649	ORNLFF-3481	

SCALE | SHEET 1 OF 2

For original sized blueprints, write:

ACES Program Manager
Building 9102-2, Room 101
Oak Ridge National Laboratory
P.O. Box Y
Oak Ridge, Tennessee 37830

REVISIONS				
ZONE	LTR	DESCRIPTION	DATE	APPROVED

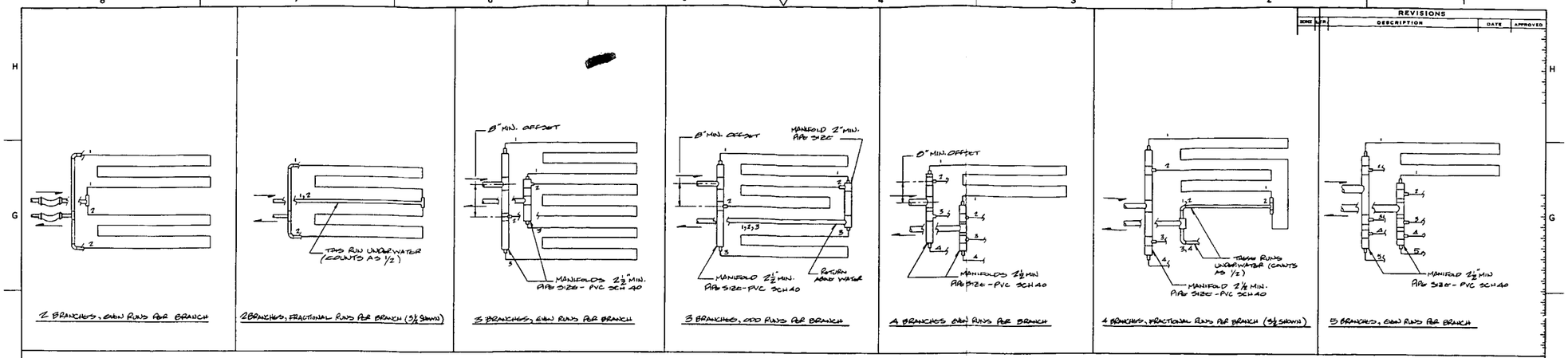

1 BRANCHES, EVEN RUNS PER BRANCH

2 BRANCHES, FRACTIONAL RUNS PER BRANCH (3/2 SHOWN)

3 BRANCHES, EVEN RUNS PER BRANCH

3 BRANCHES, ODD RUNS PER BRANCH

4 BRANCHES EVEN RUNS PER BRANCH

4 BRANCHES, FRACTIONAL RUNS PER BRANCH (3/2 SHOWN)

5 BRANCHES, EVEN RUNS PER BRANCH

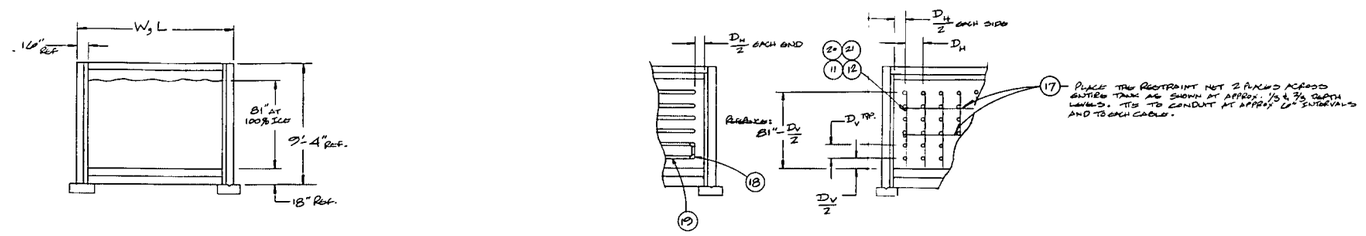

HEAT EXCHANGER ARRANGEMENTS

USING 1 INCH 100 PSI RATED PVC TYPE I TUBING (1.315 O.D., 0.0200 WALL)

ℓ = TOTAL LENGTH OF TUBING, FT.+ ○ N_B = NO. OF BRANCHES OR CIRCUITS ○ N_R = NO. OF FULL LENGTH RUNS PER BRANCH ○ N_V = NO. OF TUBE LAYERS ○ N_H = NO. OF TUBE COLUMNS ○ D_V = VERTICAL DISTANCE BETWEEN LAYERS ○ D_H = HORIZ DISTANCE BETWEEN COLUMNS, INCHES

TANK SIZE: RATED WATER VOLUME CU. FT.	EXTERIOR SIZE FEET W_E x L	INTERIOR SIZE INCHES W_I x L_I	NET POSITIVE AREA @ 100% ICE (REF) SQ. FT.	18,000 B/HR ℓ	N_B	N_R	N_V	N_H	* OMITS	D_V	D_H	30,000 B/HR ℓ	N_B	N_R	N_V	N_H	* OMITS	D_V	D_H
520	12x12	112x112	63.0	540	2	30	7	9	3	11.6	12.4	800	3	32	8	12	0	10.1	9.3
780	14x12	136x136	76.5	550	2	24	5	10	2	16.2	13.0	900	3	27	7	12	3	11.6	11.3
1080	16x16	160x160	90.0	580	2	22	5	9	1	16.2	17.8	940	3	24	6	12	0	13.5	13.5
1440	18x18	184x184	103.5	610	2	20	4	10	0	20.25	18.4	960	3	21	5	13	2	16.2	14.2
1840	20x20	208x208	117.5	620	2	18	4	9	0	20.25	23.1	980	3	19	5	12	3	16.2	17.3
2300	22x22	232x232	130.5	620	2	16	3	11	1	27.0	21.1	980	3	17	4	13	4	20.25	17.9
2800	24x24	256x256	144.0	600	2	15½	3	11	2	27.0	23.25	1020	3	16	4	12	0	20.25	21.3
3350	26x26	280x280	157.5	650	2	14	3	10	2	27.0	28.0	1040	3	15	4	12	3	20.25	23.3
3960	28x28	304x304	171.0	680	2	13½	3	9	0	33.8	27.0	1000	3	14	3	14	0	27.0	21.7
4270	28x30	304x320	171.0	650	2	12	3	8	0	27.0	38.0	1060	3	13	3	13	0	27.0	23.4

TANK SIZE: RATED WATER VOLUME CU. FT.	40,000 B/HR ℓ	N_B	N_R	N_V	N_H	* OMITS	D_V	D_H	50,000 B/HR ℓ	N_B	N_R	N_V	N_H	* OMITS	D_V	D_H	60,000 B/HR ℓ	N_B	N_R	N_V	N_H	* OMITS	D_V	D_H
520	1080	3	40	9	14	6	9.0	8.0	1300	4	34	10	15	6	8.1	7.5	1530	5	34	11	16	6	7.4	7.0
780	1130	3	34	8	13	2	10.1	10.5	1400	4	31½	9	14	0	9.0	9.7	1670	5	30	10	15	0	9.1	8.1
1080	1180	3	30	7	13	1	11.6	12.3	1470	4	28	8	14	0	10.1	11.4	1700	5	26	8	17	0	10.1	9.4
1440	1230	3	27	6	14	3	13.5	13.1	1460	4	24	7	14	2	11.6	13.1	1820	5	24	7	18	6	11.6	10.2
1840	1240	3	25	6	13	3	13.5	16.0	1540	4	22	6	15	2	13.5	13.9	1890	5	22	7	16	2	11.6	13.0
2300	1340	4	17½	5	14	0	16.2	16.6	1540	4	20	5	16	0	16.2	14.5	1920	5	20	6	17	2	13.5	13.7
2800	1300	4	16	5	13	1	16.2	19.7	1050	4	19½	5	16	2	16.2	16.0	1910	5	18	5	18	0	16.2	14.2
3350	1300	4	14	4	14	0	20.25	23.3	1020	4	17½	5	14	0	16.2	20.0	1855	5	16	5	16	0	16.2	17.5
3960	1300	4	13½	4	14	2	20.25	21.7	1620	4	16	4	16	0	20.25	19.0	2020	5	16	5	16	0	16.2	19.0
4270	1470	4	13½	4	14	2	20.25	21.7	1690	4	15½	4	16	2	20.25	19.0	1905	5	14	4	18	2	20.25	16.9

+ INCLUDES LENGTHS WHICH CONNECT RUNS AT ENDS.

* OMIT THIS NUMBER OF POSITIONS FROM THE THEORETICAL MATRIX. OMISSIONS SHOULD BE SCATTERED AMONG THE COLUMNS. TUBES OF AFFECTED COLUMNS SHOULD BE REPOSITIONED FOR EQUAL SPACING.

EXAMPLE:

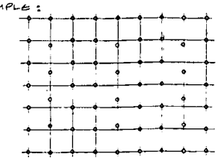

7x9 MATRIX WITH 3 RUNS DELETED.

FIND NO.	QTY.	PART NO. OR IDENTIFYING NO.	DWG. SIZE	DESCRIPTION	SPECIFICATION	NOTE NO.

PARTS LIST

APPLICATION			
THIS ITEM IS USED ON SUBASSEMBLIES			
DRAWING NO.	PER ASSY	NO. OF ASSYS	TOTAL
TO MAKE FINAL ASSEMBLY			TOTAL REQ'D.

DO NOT SCALE DRAWING

UNLESS OTHERWISE SPECIFIED DIMENSIONS ARE IN INCHES. TOLERANCES ARE

.XX = .XXX =

.XXX = ANGLES =

MATERIAL AND TREATMENT

SIGNATURE	DIV.	DATE
DRAWN		
CHECKED		
ENGR.		
MFG.		
PROJECT APPR.		
MATERIAL APPR.		

Bacece
Columbus Laboratories
525 King Avenue
Columbus OH 43201
Telephone 614 424-6424

TITLE ENERGY STORAGE ASSEMBLY HEAT EXCHANGER DETAIL

SIZE E | CODE IDENT. NO. 79986 | DIV. NO. | DWG. NO. ORNLFF-3481 | REV.

SCALE | SHEET 2 OF 2

For original sized blueprints, write:

ACES Program Manager
Building 9102-2, Room 101
Oak Ridge National Laboratory
P.O. Box Y
Oak Ridge, Tennessee 37830

(3) The basic material costs are favorable. The 1/8-inch cable, with a rated strength of 1700 pounds, costs approximately $0.25 per foot, and the swaged sleeves, $0.05 each.

The cable eyes are placed on a concrete reinforcing rod and embedded directly in the ballast, to avoid intermediate loops and attachments. A plastic tube is installed on each cable assembly to avoid accidental damage to the cable where it enters the concrete. The tubes also serve to visually indicate that the anchor rod is at the proper depth.

The cable is supported at the top by attachment to galvanized steel tubing, which also supports the ceiling insulation. Wire ties, pre-positioned between the overhead deck sections, serve as hangers for the tubing. Thin-wall conduit, 1/2 inch, is selected for its common availability, low cost, and adequate beam strength for the loads and spans required.

The individual, wire-formed anchors for the heat exchanger tubes are attached at intervals to the cables with swaged aluminum sleeves. Two turns of wire and a close clearance fit are provided in the anchors to help assure low contact stresses for the thin wall plastic tubes. If desired, extensions of some sort might be added to the anchor, to engage the ice and transmit loads directly to the cable rather than through the tube.

Restraint Nets. Two horizontal nets of nylon are provided to help prevent large, unattached ice chunks from striking heat exchanger tubes in rising to the surface. The nets are placed at approximately the 1/3 and 2/3 depth levels to prevent any single chunk from generating substantial kinetic energy. The nets are designed to be attached to steel tubing at the tank edges, although direct attachment to the heat exchanger tubes might be considered.

Deck. Consistent with the ORNL report, precast concrete decking is selected for the tank cover. A rugged, permanent structure is thus provided. Costs will be substantial, however, especially at remote, dispersed installations, due to the heavy equipment needed to transport

and place this material. Long span, roll formed steel decking, covered with lightweight concrete might be a favorable alternative in some installation locations, especially if a central load-bearing beam or wall could be provided.

The deck thicknesses were selected to provide at least a 50 lb/sq.ft. external load. The resulting dead weight of the deck is from 45 to 60 lb/sq.ft.

Manufacturing Methods

The ORNLFF concept uses components which are available commercially, except for the wire-formed tube anchor, and no new or complex manufacturing methods are required.

The Foam-Form blocks are a patented, commercial product, now manufactured only in several locations. Manufacture is not difficult or especially costly. Substantial increase in demand might be met by added manufacturing locations or licenses, but difficulties incident to a single proprietary source also might develop.

The tube anchor is intended to be formed of pregalvanized wire and could be made by any capable wire-forming firm. In large quantities the unit cost should be low, in the order of $0.30 each.

Installation Methods

Conventional methods also generally apply to the installation of the ORNLFF assembly concept. The Foam-Form blocks do require special procedures, but these are not difficult and are well developed.

An outline of sequential procedures for installing the complete energy storage assembly appears in Appendix D.

Cost Factors

Costs are estimated for four tank volumes, with both the smallest and largest heat exchanger for each. Detailed estimates appear in Appendix C, and comparisons to other concepts can be made from Table 6 and Figures 8 and 9.

The major contributors of cost for two tank sizes are listed in Table 8, from which inferences can be made.

The Foam-Form walls are the single largest cost element, for both tank sizes. Next, at least for the example travel distances, are the overall deck costs, followed by the auxiliary insulation costs. Remaining costs are more or less scattered among contributors, which are each less than 9 percent of the total cost.

For the large tank, the deck material and auxiliary insulation rise in cost as a fraction of the total. This is due to (1) the long deck span and (2) an unfavorable surface area/volume ratio of the tank shape. An increase of tank depth would improve the area/volume ratio, but it would also affect a number of other design and cost factors. A detailed investigation would be necessary to determine if any cost benefit would result.

Capable Suppliers and Installers

For all the important components needed for this assembly, potential product suppliers are designated as part of the drawing parts list.

There are apparently only a few contractors now familiar with installation of the Foam-Form blocks. However, instructions supplied by the block manufacturer are thorough, special equipment is not required, and any capable concrete contractor will be able to build the walls. Two contractors now experienced with the block are listed in Appendix E.

Prestressed concrete decking is produced in many metropolitan areas. Some manufacturers do not now produce the narrow (24 inch and less) sections which are convenient for this application, but easily could if sufficient demand developed. Some, but by no means all, of the suppliers of narrow decking are listed in Appendix E.

TABLE 8. SIGNIFICANT COST CONTRIBUTORS, ORNLFF CONCEPT (REFERENCE TABLE C-1)

Rated Water Volume, cu.ft.	520		3,960	
Base Cost, with 18K heat exchanger	$5400		$14,210	
Excavation	6.9%		4.2%	
Footer	4.4		3.0	
Walls (complete)	31.1		27.6	
Auxiliary insulation	8.7		16.0	
Liner	6.5		6.2	
Ballast slab	5.6		8.3	
Deck				
Material	6.7	20.7	17.9	25.8
Delivery @ 100 miles from factory	4.6		3.5	
Placement @ 20 miles from erector	9.4		4.4	
Heat exchanger, 18K				
Cables and installation	2.0		2.5	
Tubing	3.0		2.8	
Additions, to obtain 60K heat rate				
Tubing	5.6		1.4	
Hangers	4.1		1.1	
Elbows	4.1		0.8	

Concept SWPL

Battelle drawing SWPL-3181 (two sheets) illustrates the requirements and features of a concept which uses components of common residential, in-ground swimming pools for an energy storage assembly tank structure.

Phase II Design Features

The specified design differs from the original arrangement suggested in Phase I as follows:

(1) The beam which accepts the heat exchanger buoyancy load is now cantilevered diagonally upwards along the sloped pool walls.

(2) The floor anchors are moved as closely as practical to floor edges.

(3) The beam which spans the tank center is eliminated.

(4) A reinforcea concrete "rim" is placed along the base of the steel wall panels, to improve the support of deck and sill loads.

Basic Tank Dimensions. The basic height of the prefabricated wall panel, 42 inches, establishes the vertical wall height of the tank. Particular soil characteristics might allow various pitches for the sloped surfaces, but a 45-degree slope was selected after discussions with swimming pool contractors. To conserve materials and surface area from which energy is lost, a generally square outline is preferred. Finally, the tank depth is selected to be as great as possible with consideration of the floor area remaining for ballast and the length of the support beam cantilevers. The cantilevered section of the beam is found to be a critical design factor.

The common commercial increment of wall panel length is 2 feet, although 1-foot lengths are available. For 2-foot increments and a generally square outline, ten tank sizes serve to span the required range of volume. The basic depths are 6, 7, and 8 feet.

Tank Walls. The wall panels shown for the tank are standard swimming pool components available from several manufacturers. Steel sheets are stiffened at the top and bottom edges by shaped flanges and at intervals along the length by added vertical members. A-frame braces hold the wall erect and some have features for convenient adjustment to a plumb condition after main anchoring is complete.

Ordinarily the panels are erected on a ledge of undisturbed earth, shimmed to the proper elevation and secured by steel stakes driven into the ground. The anchor stakes are mounded with concrete so that the structure is stiffened and loads are transmitted to the earth at low unit pressure. Generally, for swimming pool applications, the wall is placed back from the earth edge where the sloped descent begins. For ACES purposes this ledge has been eliminated, to simplify the contour which receives the insulation and to preserve tank volume and floor area.

At the base of the wall panel a reinforced concrete rim is provided to stabilize the panel and to sustain the dead weight of the deck and external loads placed on the deck. The concrete rim will serve to distribute these loads.

Along the top of the wall panel, a reinforced concrete sill is formed. The sill provides beam strength to the wall panels, to resist water pressure, and provides a durable, rigid base for the deck.

Ballast. To anchor the heat exchanger, a concrete slab with vertical steel posts is provided, beneath the membrane liner and floor insulation.

Liner. As described for the ORNLFF concept, a film of polyethylene is used to physically separate the liner and the insulation.

The anchor posts penetrate the liner, and "boots" must be carefully installed to achieve and maintain water-tightness. This procedure is routine for industrial liner suppliers but may initially represent a quality control problem among swimming pool contractors, until experience is gained.

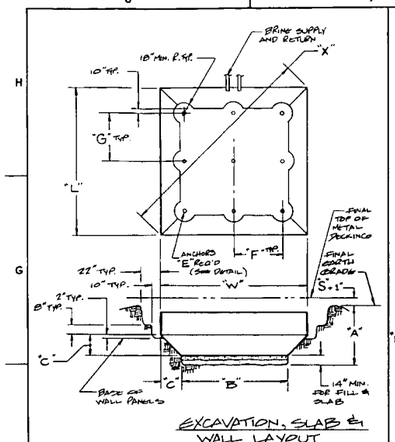

EXCAVATION, SLAB & WALL LAYOUT

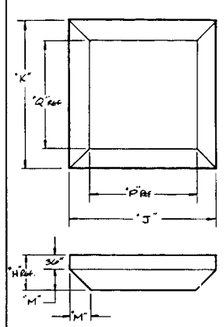

LINER LAYOUT (INSTALLED DIM'S)

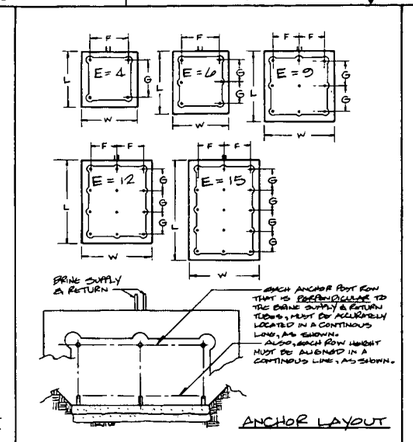

ANCHOR LAYOUT

TANK SIZE			EXCAVATION				ANCHORS			LINER						HEAT EX. SUPPORT PARTITIONS		DECKING				INITIAL WATER LEVEL
W (FEET)	L (FEET)	TANK VOLUME (U.FT.)	A	B	C	X (REF.)	E (QUAN.)	F	G	H (REF.)	J	K	M	P (REF.)	Q (REF.)	QUAN.	R	S (INCHES)	GAGE	CUT LENGTHS (FEET)	MIN. CAPACITY REQ'D SQ. FT.	BASIC COST INSTALD. $/SQ. FT.	T
12	14	510	7'-7"	8'-4" 7'-4"	5'-4"	18'-5"	4	5'-8"	5'-8"	70"	124"	148"	34"	50"	80"	2	62"	3"	18	15'	480	65	8"
14	14	630	7'-7"	7'-4"	5'-4"	19'-9½"	4	5'-8"	5'-8"	70"	148"	148"	34"	60"	80"	2	62"	3"	16	15'	225	55	8"
16	16	850	7'-7"	9'-4"	5'-4"	22'-7½"	4	7'-8"	7'-8"	70"	172"	172"	34"	104"	104"	2	62"	4½"	18	17'	289	65	8"
18	18	1200	8'-7"	9'-4"	6'-4"	25'-5½"	4	7'-8"	7'-8"	82"	196"	196"	46"	104"	104"	2	74"	4½"	18	19'	361	51	8½"
20	20	1640	8'-7"	11'-4"	6'-4"	28'-5½"	6	9'-8"	6'-10"	82"	220"	220"	46"	128"	128"	3	74"	6"	18	21'	441	60	8½"
22	22	2190	9'-7"	11'-4"	8'-4"	31'-1"	8	6'-10"	6'-10"	94"	244"	244"	58"	128"	128"	3	86"	6"	16	23'	529	51	8½"
24	24	2710	9'-7"	13'-4"	8'-4"	33'-11"	8	8'-10"	8'-10"	94"	268"	268"	58"	152"	152"	3	86"	7½"	16	25'	625	54	9"
26	26	3280	9'-7"	15'-4"	8'-4"	36'-9"	8	10'-10"	10'-10"	94"	292"	292"	58"	176"	176"	3	86"	7½"	14	27'	729	53	9"
28	28	3920	9'-7"	17'-4"	8'-4"	39'-7"	12	7'-10"	5'-2⅝"	94"	316"	316"	58"	200"	200"	4	86"	7½"	12	29'	841	59	9"
28	30	4250	9'-7"	17'-4" 12'-4"	8'-4"	41'-0"	15	7'-10"	4'-5"	94"	316"	340"	58"	200"	224"	5	86"	7½"	12	29'	873	59	9"

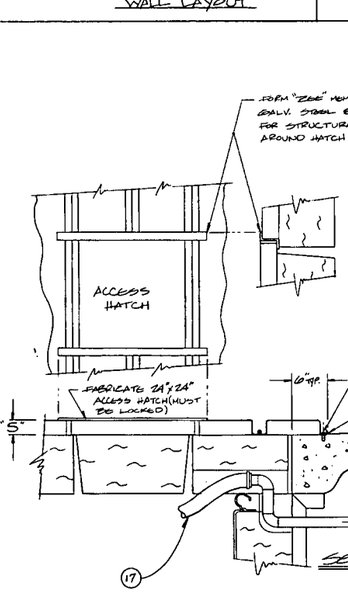

SECTION (THRU BRINE SUPPLY & RETURN AREA)

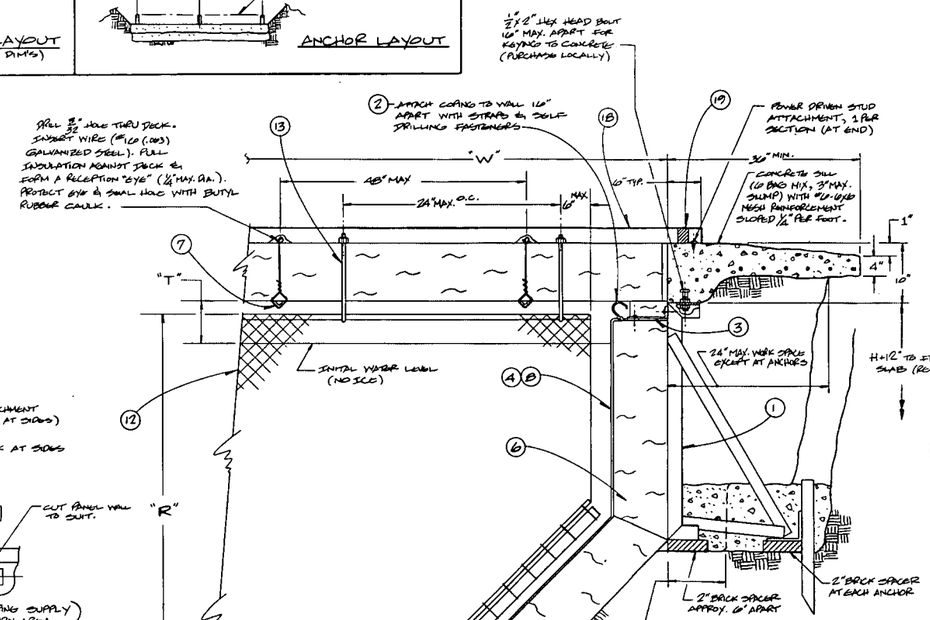

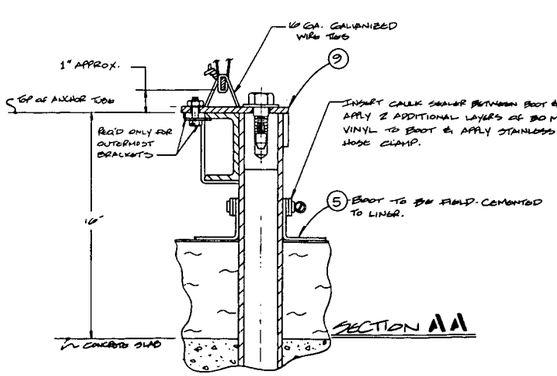

SECTION A-A

NOTES:

1. ORDER SHOULD SPECIFY THAT PANELS & COPING BE SUPPLIED IN KITS, COMPLETE WITH CORNER PIECES & ASSOCIATED ATTACHMENT HARDWARE.
2. LINER ASSEMBLY MUST HAVE GRIDE FINISH DETAIL CONSISTANT WITH RIM LOCK COPING (ITEM 2). ORDER LINER BY INSTALLED DIMENSIONS. SUPPLIER SHOULD APPLY APPROPRIATE STRETCH ALLOWANCES. IF SUPPLIER ALSO PROVIDES WALL PANELS, CONSISTENCY OF LINER & WALL PERIMETER DIMENSIONS MAY BE QUESTIONED. LINER ALLOWS FOR 10 INCH INSULATION THICKNESS).
3. INSULATION LENGTHS TO 12 FEET ARE AVAILABLE.
4. VINYL COATING TO BE FUSED TO GALVANIZED WIRE COATING. MINIMUM WIRE STRENGTH SHALL NOT BE LESS THAN 1200 POUNDS. GALVANIZING SHALL BE PER ASTM A-641-71a (NOTE THAT SELVAGES ARE VERTICAL NOT HORIZONTAL AS IN FENCES).
5. SEAL BOOT TO BE 2# 30 MIL VINYL, WITH 10"x10" BASE AND COLLAR FOR 2.375" O.D. PIPE.

21	COUPLING - CONDUIT	3/4" THIN WALL CONDUIT COUPLING	LOCAL ELECT. SUPPLY
20	SUPPORT TUBING	3/4" THIN WALL TUBING	LOCAL ELECT. SUPPLY
19	CLOSURE - RUBBER	TO SUIT ITEM 18	SAF MFG. CO. INC. OR WHEELING CORRUGATING CO.
18	DECK STEEL	LONG SPAN, GALVANIZED (2 oz/FT²) WHEELING TYPE H (SEE TABLE ABOVE)	WHEELING CORRUGATING CO.
17	TUBING - FLEXIBLE	SUCH AS: NEOPRENE, 1/8" WALL PER ASTM-D-2000 OR SARAFLITE 150 PVC (WITH 300) 1 1/2", 2" OR 2 1/2"	MAJOR RUBBER CO. INC. PACIFIC-GLOBE CO.
16	PIPE FITTINGS - PLASTIC	PVC SCH 40 PER ASTM D-2466	AS PER ITEM 14 OR LOCAL PLUMBING SUPPLY
15	NET - RESTRAINT	NYLON OR POLYESTER FISH NET 2" MESH SIZE	FISHNETS (OLD SPIKE SHOP) MID LAND MFG. CO. (SPIKE 410)
14	TUBING - RIGID	PVC TYPE 1, 2" 160 PSI RATING (1.315 O.D., 1.175 I.D.) PER ASTM D-2241	CHARLOTTE PLASTICS, CRESCENT PLASTIC PRO CO. UNIFAL PLASTIC CO. INC. PLASTIC NATL. SUPPLY, SUCCOND PLASTIC PRO CO.
13	J-BOLTS	3/8 x 14 - GALV. STEEL	MONMASTER-CARR OR OTHER HARDWARE SUPPLY
12	FENCE FABRIC - CHAIN LINK	9 (2.148) GA. 2" MESH, VINYL COATED (SEE NOTE 4)	ANCHOR POST PRODUCTS
11	TENSION BAR	1/4" x 3/4" GALV. STEEL	ANCHOR POST PRODUCTS, OR LOCAL FENCE SUPPLIER
10	FRAME PARTITION	SEE DETAIL D, SHEET 2	MACHINE/WELDING SHOP
9	ANCHOR POST BRACKET BOLT CLIP	SEE DETAIL A, SHEET 2 " " B " " " " D " " " " C " "	MACHINE/WELDING SHOP
8	SAFER LINER	4 MIL POLYETHYLENE	(LOCAL BUILDING SUPPLY)
7	ANGLE (INSUL.) SUPPORT	1"x1"x1/8", 2024-GALV. STEEL	(LOCAL SHEET METAL SHOP)
6	INSULATION - POLYSTYRENE	1 PCF DENSITY, 10" THICK - NOTE 3, 48" WIDER	BILMAN BROTHERS
5	SEAL BOOT	SEE NOTE # 5	STATE INDUSTRIES INC
4	LINER ASSEMBLY	30 MIL VINYL	MAJOR PRO. GROUP CORP. OR STATE INDUSTRIES INC
3	COPING ATTACHMENT STRAPS	1" WIDE, 20 GA. GALV. STEEL	(LOCAL SHEET METAL SHOP)
2	RIM LOCK COPING	2" MAX. HEIGHT, ALUMINUM	MAJOR PRO. GROUP CORP.
1	WALL PANEL - "A" FRAME	12" HEIGHT, GALV. STEEL	MAJOR PRO. GROUP CORP.
ITEM	DESCRIPTION	MATL/SPEC	POSSIBLE SOURCE

PARTS LIST

APPLICATION	DO NOT SCALE DRAWING	SIGNATURE	DIV	DATE
THIS ITEM IS USED ON SUBASSEMBLIES	UNLESS OTHERWISE SPECIFIED DIMENSIONS ARE IN INCHES. TOLERANCES ARE:	DRAWN		5-13-81
DRAWING NO. / NEXT ASSY / NO. OF ASSYS / TOTAL	.XX= .XXX=	CHECKED		5-18-81
	.XXX= ANGLES=	ENGINEERING APPR.		
	MATERIAL AND TREATMENT	APPR.		
TO MAKE FINAL ASSEMBLY / TOTAL ASSYS.		APPR.		
		CONTRACT APPR.		
		SPECIAL APPR.		

Battelle, Columbus Laboratories, 505 King Avenue, Columbus, Ohio 43201, Telephone (614) 424-6424

TITLE: SALT STORAGE ASSEMBLY FOR ACES SYSTEM

SIZE	CODE IDENT NO.	DIV. NO.	DWG. NO.	REV.
E	79986	049	SWPL 3181	

SCALE -H- ACCT CONTRACT-DIRECT SHEET 1 OF 2

For original sized blueprints, write:

ACES Program Manager
Building 9102-2, Room 101
Oak Ridge National Laboratory
P.O. Box Y
Oak Ridge, Tennessee 37830

REVISIONS			
ZONE	LTR	DESCRIPTION	DATE	APPROVED

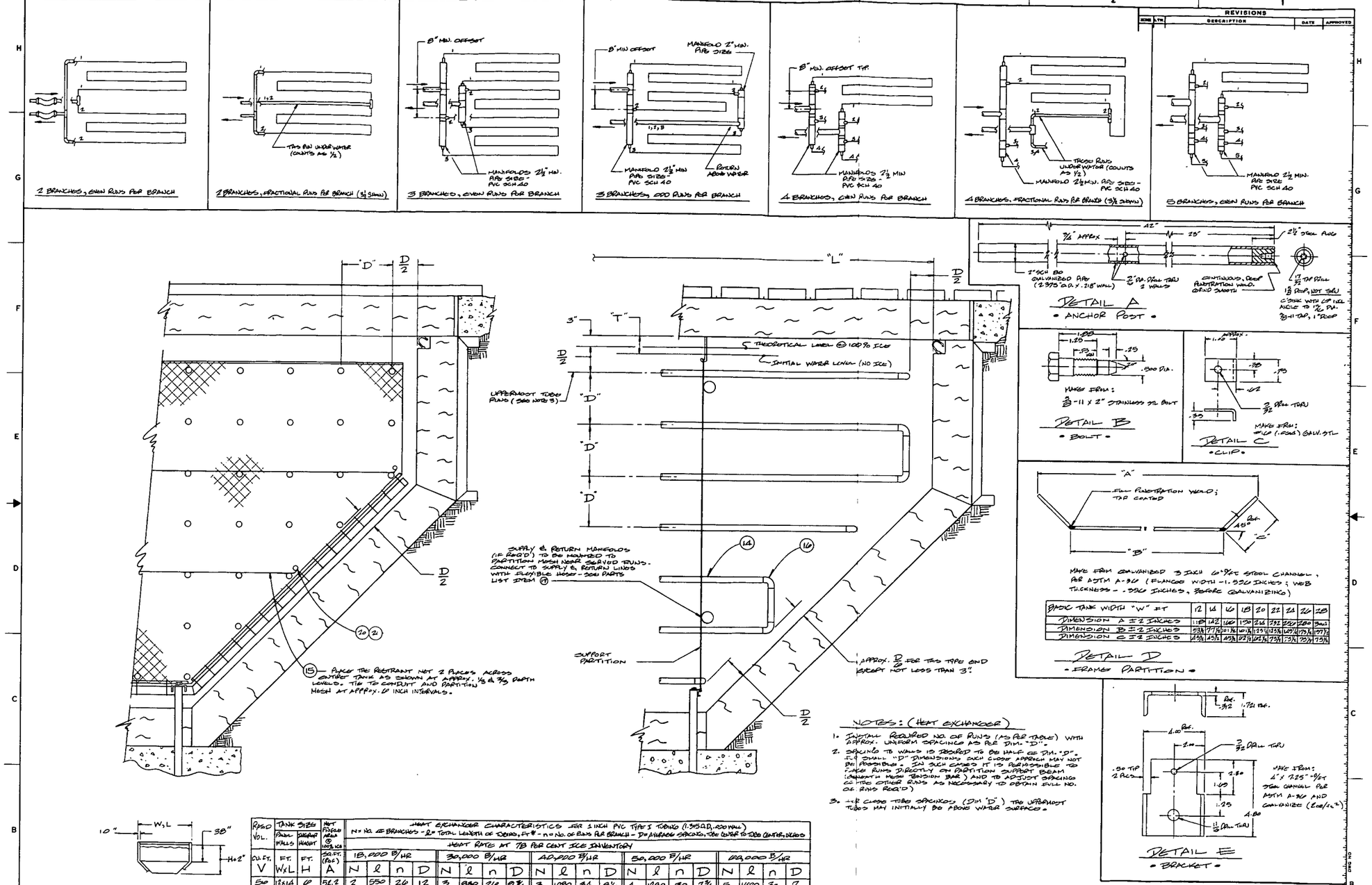

BASIC TANK WIDTH "W" FT	12	14	16	18	20	22	24	26	28
DIMENSION A = 2 INCHES	118	142	166	190	214	238	262	286	310
DIMENSION B = 2 INCHES	93 3/4	117 1/2	141 1/4	165	188 3/4	212 1/2	236 1/4	260	283 3/4
DIMENSION C = 2 INCHES	45 3/4	45 3/4	45 3/4	47 1/2	49 1/4	51 1/4	53 1/4	55 1/4	57 1/4

RUN'D VOL.	TANK SIZE PLAN WALLS	TANK SIZE VERTICAL HEIGHT	NET PLANE AREA @ 100% ICE	HEAT EXCHANGER CHARACTERISTICS FOR 1 INCH PVC TYPE 1 TUBING (1.315 O.D., .020 WALL) N = NO. OF BRANCHES - ℓ = TOTAL LENGTH OF TUBING, FT* - n = NO. OF RUNS PER BRANCH - D = AVERAGE SPACING, TUBE CENTER TO TUBE CENTER, INCHES																			
				HEAT RATE AT 75 PER CENT ICE INVENTORY																			
				15,000 B/HR				30,000 B/HR				45,000 B/HR				60,000 B/HR				120,000 B/HR			
CU. FT. V	FT. W×L	FT. H	SQ. FT. (ft²) A	N	ℓ	n	D	N	ℓ	n	D	N	ℓ	n	D	N	ℓ	n	D	N	ℓ	n	D
50	12×14	10	51.2	2	550	26	12	3	850	20	9 3/4	3	1080	34	8 1/2	4	1280	30	7 3/4	5	1420	30	7
630	14×14	10	68.9	2	550	25 1/2	13 1/4	3	870	27	10 1/2	3	1100	34	9 1/2	4	1380	32	8 1/2	5	1610	30	8
890	16×16	10	75.5	2	570	22	15 3/4	3	880	23	12 1/4	3	1160	30	11	4	1440	27 1/2	10	5	1670	26	9
1200	18×18	7	96.9	2	570	20	19	3	940	22	14 1/2	3	1190	28	13	4	1470	26	11 1/2	5	1710	24	10 3/4
1440	20×20	7	110.5	2	580	18	21	3	970	20	16 1/4	3	1200	26	14 1/2	4	1510	23 1/2	13	5	1780	22	12
2190	22×22	8	139.9	2	630	18	23 1/4	3	980	18	18 1/2	4	1270	18	16 1/2	4	1550	22	15	5	1930	22	13 1/4
2710	24×24	8	151.5	2	630	18	26	3	990	17	20 1/2	4	1300	17 1/2	17 1/2	4	1500	20	16 1/2	5	1990	20	14 3/4
3220	26×26	8	167.2	2	660	15 1/2	27 3/4	3	1030	16	22 1/4	4	1330	15 1/2	19 1/2	4	1670	15 1/2	17 1/2	5	1930	18	16 1/4
3920	28×28	8	182.8	2	690	14	30 1/2	3	1090	15	24	4	1450	15 1/2	20 1/4	4	1620	18	19	5	2100	18	17
4650	28×30	8	182.8	2	660	14	30 1/2	3	1070	14	25	4	1370	13 1/2	21 3/4	4	1620	16	20 1/4	5	2030	16	18

* INCLUDES END LENGTHS WHICH CONNECT "RUNS".

NOTES: (HEAT EXCHANGER)

1. INSTALL REQUIRED NO. OF RUNS (AS PER TABLE) WITH APPROX. UNIFORM SPACINGS AS PER DIM. "D".
2. SPACING TO WALLS IS REQ'D TO BE HALF OF DIM. "D". FOR SMALL "D" DIMENSIONS, SUCH CLOSE APPROACH MAY NOT BE PRACTICAL. IN SUCH CASES IT IS PRACTICABLE TO PLACE RUNS DIRECTLY ON PARTITION SUPPORT BEAM (INSTEAD MESH TENSION BAR) AND TO ADJUST SPACING OF THE OTHER RUNS AS NECESSARY TO OBTAIN FULL NO. OF RUNS REQ'D)
3. THE CLOSE TUBE SPACINGS (DIM "D") THE UPPERMOST TUBES MAY INITIALLY BE ABOVE WATER SURFACE.

FIND NO.	QTY	PART NO. OR IDENTIFYING NO.	DWG SIZE	DESCRIPTION	SPECIFICATION	NOTE NO.

PARTS LIST

APPLICATION	DO NOT SCALE DRAWING	SIGNATURE	DIV	DATE
THIS ITEM IS USED ON SUBASSEMBLIES: DRAWING NO. / NEXT ASSY / NO. OF ASSYS / TOTAL	UNLESS OTHERWISE SPECIFIED DIMENSIONS ARE IN INCHES TOLERANCES ARE .XX±.01 .XXX± .005 ANGLES± MATERIAL AND TREATMENT	DRAWN [illegible] / CHECKED [illegible] / ENGINEERING [illegible] / MFG / MFG / PROJECT APPR. / DESIG. ILL. APPR.	1777-ABI / ALL	3-10-81

TO MAKE FINAL ASSEMBLY — TOTAL REQ'D.

Battelle Columbus Laboratories, 505 King Ave., Columbus, Ohio 43201, Telephone 614 424-6424

TITLE: ENERGY STORAGE ASSEMBLY FOR ACES SYSTEM

SIZE E | CODE IDENT. NO. 79986 | DIV. NO. 1777 | DWG. NO. SNPL 3181 | REV.

SCALE — | ACCT. 2-1777-0281 | SHEET 2 OF 2

For original sized blueprints, write:

ACES Program Manager
Building 9102-2, Room 101
Oak Ridge National Laboratory
P.O. Box Y
Oak Ridge, Tennessee 37830

An aluminum rim coping is provided to receive and hold the edge of the liner, as in the ORNLFF concept. The vertical load of the rim is supported by the insulation and lateral attachment is made at intervals along the wall panels. The theoretical level of the ice surface at 100 percent ice fraction is 1 inch below the liner edge.

Tube Support Structure. Partitions of chain link fence fabric are provided for support of the heat exchanger tubes. The mesh is attached along the bottom edge to a beam member, which is formed of steel channel. The beam is attached to the anchor posts with steel brackets and bolts. Some of the brackets are pre-positioned, but the outermost brackets are carried by the beam and are bolted down (from above) as part of the final installation of the heat exchanger.

Inability to place the anchor posts closer to the tank edges is a significant design problem. The distribution of buoyancy forces can be expressed as a "pressure" for the projected horizontal area of the pool, proportional to the ice/water depth. Although this pressure declines at the tank edges, where the depth decreases, the loads must be supported by cantilevered members: the beam ends and (in the transverse direction) the heat exchanger tubes. In each case the basic material strength and beam section modulus must together be adequate. The horizontal extent of the sloped tank wall is variously 34, 47, and 58 inches for the respective depths of 6, 7, and 8 feet. The anchor post centerlines are an additional 6 inches from the floor edge, for a maximum cantilever length of 64 inches. The basic bending strength of the tube/ice member was treated separately in the section titled "Heat Exchanger". The strength required of the steel beam is a function of the number and position of the partitions and the tank depth. For these designs and for a maximum stress level of 20,000 psi, a 3 inch, 6 pound per foot steel channel is adequate. Peak moment generally will occur near the angled joint, and therefore a full strength joint is required. Although cantilevers are generally inefficient, no more suitable alternative for this concept was conceived.

The general direction of the chain link mesh must be vertical in this case, where it is horizontal in fences, because the basic strength is unidirectional. Although efforts were made to do so, the standard "tension"

applied to fence mesh was not established. As a result, it was necessary to examine the basic strength of the wire and the directional pattern of loading, and a peak load rating of 300 pounds per foot was estimated for 9-gage material (.148-inch wire, as measured over applied coatings). The vertical load is transmitted to the beam by standard fencing attachment features, but a variation is required for the inclined sections. Here the mesh must be cut to match the wall slope and the cut ends must be tied for strength. The tension bar along this edge is not trapped as it is when in a horizontal or vertical position, and the ties to the beam must hold the tension bar in place (see drawing insert, sheet 1). The ties are free to slide along the beam and the resulting force vector must be accepted by horizontal tension in the mesh, requiring any multiple piece mesh sections to be securely spliced.

The overhead attachments of the mesh serve only to allow handling of the mesh/heat exchanger assembly, support its weight, and stabilize the structure. J-bolt attachments to the deck are selected.

As ice forms around the tubes, considerable ice/mesh engagement results. This may be a very favorable attribute of this support structure. As ice melting begins, the substantial buoyancy forces may be transmitted directly from the ice to the support structure, rather than through the tube.

The contact stress of the tube wall deserves consideration. Basically the tube is initially contacted only at two points, where the mesh wires cross the tube surface. Of course, as ice forms and the buoyancy load increases, the ice immediately surrounding the tube and mesh contact should decrease the load concentration. As the ice begins to melt, however, this support is lost, and an ice fracture that causes high tube load may then be of consequence. Short, inexpensive plastic sleeves could be placed on all the tubes at the mesh partitions, if this were to be a critical failure mode and the tube strength is otherwise adequate. Such an addition is not now specified.

Any manifolds that are needed for multi-branch heat exchangers are intended to be mounted to the mesh partitions.

Restraint Nets. As with the ORNLFF concept, two horizontal nets are provided to prevent large, unattached ice chunks from striking heat exchanger tubes in rising to the surface. The nets are tied to thin-wall conduit and to the mesh partitions.

Deck. Roll-formed, galvanized steel is selected for the tank cover. The tank spans and the load capacity of the sill/wall-panel/rim system make a concrete topping of dubious feasibility. The exposed steel surface with its grooves may be a basic detriment to the concept. The grooves could probably be filled with lightweight concrete to present a smooth surface if desired. Also, there is one style of long span, roll formed deck which does not present deep grooves (Style LS, H. H. Robertson Company), but this is presently only a "catalog" item that is not generally available.

The deck is laid in 12-inch section widths, progressively across the tank. Ceiling insulation is supported by thin steel angles which are pulled upward and attached to the steel decking at the insulation joints. Hanger wires extend through holes drilled in the deck. Wire of sufficient gage is used so that only simple loop "eyes" need be formed to hold the load. The drilled holes are caulked to avoid water entry, and the corrugated ends of the deck are closed with formed rubber strips which are common for this purpose.

As the heat exchanger partitions are approached, their temporary supports are removed and the J-bolt attachments are made.

The deck sections are secured to the surrounding concrete sill with power-driven studs. In heavier gages the deck sections may have to be pre-drilled as part of this procedure.

The specified deck sections are selected to provide at least 50 lb/sq.ft. external load. The central beam that was considered in Phase I for reduction of deck costs was found not to be feasible for this load level, and full span decking of greater thickness and gage is selected.

Manufacturing Methods

This concept also uses generally available components, except for the anchor parts. These parts are shown as they probably would be made for prototype and early production assemblies. For greater quantities the detailed methods of manufacture might be refined, but the consequent cost reduction would not be great in the context of this investigation.

For the chain link mesh and its attachments, factory methods might eventually replace the field operations of cutting, splicing, and tying the mesh to the welded steel beam. These more efficient methods also would not appreciably reduce the total, overall cost.

Installation Methods

The procedures and requirements of installation for this particular concept are also generally conventional. Most of the operations are presently performed by swimming pool contractors, and the remaining operations are not greatly dissimilar.

An outline of the sequential procedures for installing the complete energy storage assembly appears in Appendix D.

Cost Factors

Costs are estimated for four tank volumes, with both the smallest and largest heat exchanger for each. The detailed estimates appear in Appendix C, and comparisons to other concepts can be made from Table 6 and Figures 8 and 9.

The major contributors of cost for two tank sizes are listed in Table 9, the greatest of which are the steel wall panels, the insulation, and the deck. As the tank size increases, the insulation and deck costs become even more prominent. Here the deck predominates all the cost factors, even exceeding by more than $2000 the cost of the equivalent sized concrete deck of the large Foam-Form tank. However, the dead weight of a concrete

TABLE 9. SIGNIFICANT COST CONTRIBUTORS, SWPL CONCEPT (REFERENCE TABLE C-2)

Rated Water Volume, cu.ft.	510	3,920
Base Cost, with 18K heat exchanger	$5500	17,900
Excavation	6.2%	3.2%
Ballast slab	3.1	3.5
Pit shape refinement	5.5	2.3
Wall panels, in place	20.7	13.1
Wall panel support rim	3.6	1.8
Sill, concrete	6.5	3.7
Insulation	13.6	17.9
Liner	8.5	7.0
Deck, installed	11.1	33.0
Heat exchanger, 18K		
Beams	2.9	2.8
Tubing	3.1	1.1
Additions, to obtain 60K heat rate		
Tubing	5.6	2.4
Elbows	3.6	0.7

deck prevents its consideration for the SWPL structure. There seem to be only two alternatives, both of which are compromises:

(1) Provide for midspan deck support. A structural beam would require substantial end supports, which probably should extend deep into the ground. Also, the beam would be difficult to insulate. A load-bearing partition would be structurally simpler, but would complicate the heat exchanger and liner.

(2) Reduce the external load rating required of the deck. At less than 50 lb/sq.ft. rating it may be necessary to deny most human access, and general utility of the deck is lost. However, although local snow loads must be considered, a low deck load rating would probably suffice to support the solar collectors that are considered for enhancement of the ACES system in northern climates.

Capable Suppliers and Installers

The parts list of the SWPL-3181 drawing (sheet 1) indicate possible suppliers of all the important components of this concept.

Contractors which build swimming pools similar to the tanks here considered are many and widespread. Extensions of their skills and methods will be required, but the typical work crews necessarily have multiple skills and should adapt readily to the added procedures that are required.

A compilation of possible sources for components appears in Appendix E.

Concept UTLBX

Battelle drawing UTLBX-3981 (three sheets) illustrates the requirements and features of a concept which uses large precast concrete shells for an energy storage assembly tank structure. Similar prefabricated modules are now used as underground "manholes" by public utility companies. For

ZONE	LTR	REVISIONS DESCRIPTION	DATE	APPROVED

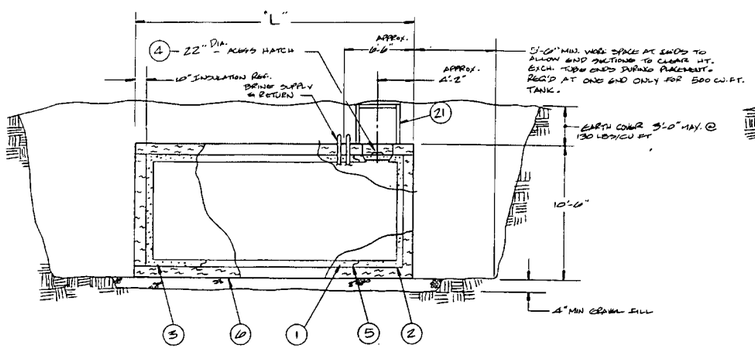

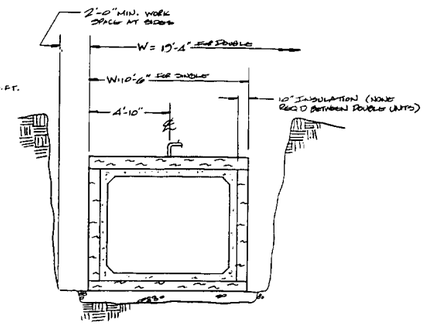

RATED VOLUME V CU FT	TANK MODULES NUMBER LEFT END	CENTER	RIGHT END	APPROX. SHIPPING WEIGHT LBS.	OVERALL TANK SIZE EXTERIOR DIMS WITH 10 INCH INSULATION L X W	TUBE SUPPORT PARTITIONS NUMBER	MAX. DIST. TO TANK END 2" ETC.	MAX SPACING (APPROX) "b" ft.
500	1	0	1	29,400	11'-4" x 10'-6"	(SPACING SEE SHEET 4)		
750	1	1	1	39,200	15'-7" x 10'-6"	2	4'-10"	3'-10"
1000	1	2	1	49,000	19'-2" x 10'-6"	2		8'-3"
1250	1	3	1	58,700	22'-7" x 10'-6"	3		6'-4"
1500	1	4	1	68,500	27'-0" x 10'-6"	4		6'-4"
2000	1	6	1	88,000	37'-10" x 10'-6"	4		8'-10"
2500	2	6	2	117,400	22'-7" x 19'-4"	3/3		6'-4"
3000	2	8	2	137,000	29'-0" x 19'-4"	4/4		6'-4"
3500	2	10	2	156,800	35'-3" x 19'-4"	4/4		8'-3"
4000	2	12	2	176,000	37'-10" x 19'-4"	4/4		8'-10"

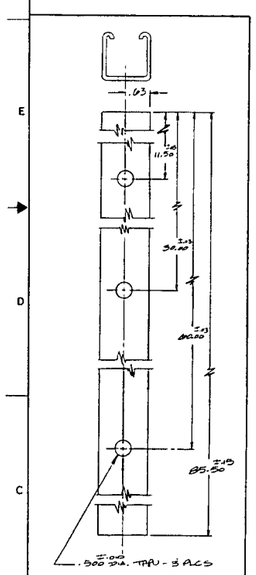

DETAIL - B

• SUPPORT VERTICAL •

MAKE FROM UNISTRUT CHANNEL A-1000 (1½ x 1½ x 14 GA. BEFORE GALVANIZING) (1.1 LB/FT REF.)

HOT DIP GALVANIZE 2 OZ. PER SQ.FT. PER ASTM A-123 OR A-153.

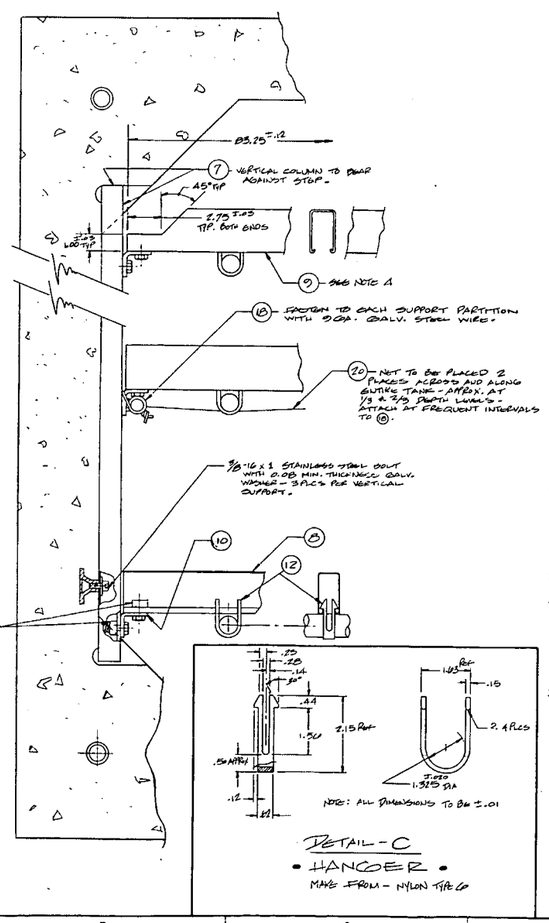

DETAIL - C

• HANGER •

MAKE FROM - NYLON TYPE 6

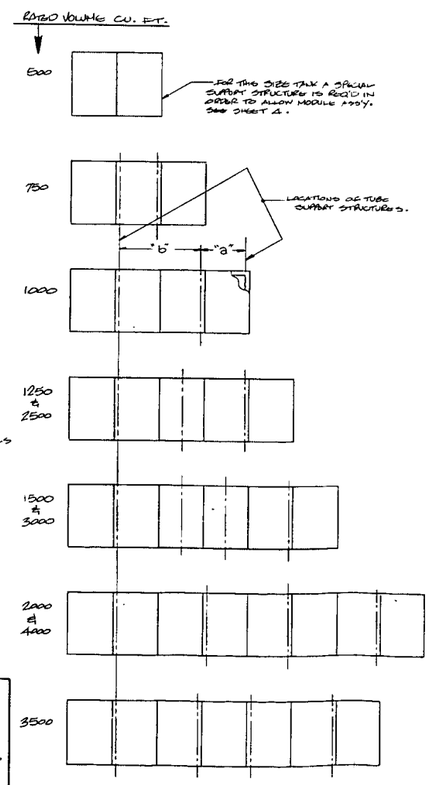

LOCATION OF TUBE SUPPORT PARTITIONS

NOTES:

1. MODIFIED HORIZONTAL SUPPORT NEED ONLY FOR 8 OR MORE TUBE LAYERS (N>)
2. (APPLIES ONLY TO 500 CU FT ASSEMBLY):
   VINYL COATING TO BE FUSED TO GALVANIZED WIRE COATING - MINIMUM WIRE STRENGTH SHALL NOT BE LESS THAN 1200 POUNDS - GALVANIZING SHALL BE PER ASTM A-641-71B - (NOTE THAT SELVAGES ARE VERTICAL NOT HORIZONTAL AS IN FENCES).
3. THESE ITEMS NOT APPLICABLE TO 500 CU. FT. ASSEMBLY - SEE SHEET 2, FOR 500 CU.FT. INFORMATION.
4. MODIFIED SUPPORT - MAKE FROM UNISTRUT CHANNEL A-5000 (1.4 - 2½ x 14 GA. BEFORE GALVANIZING) (1.7 LBS/FT. REF.) - UNISTRUT CORP. WAYNE, MICHIGAN. HOT DIP GALVANIZE 2 OZ PER SQ.FT. PER ASTM A-123 OR A-153.

21	MANHOLE & COVER	24" ID PRECAST CONCRETE	BLDG SUPPLY	
20	NET-RESTRAINT	NYLON OR POLYESTER ROPE NET - 2" MESH SIZE	FABLOK MFG (STYLE 5410) MID LINES MFG (STYLE 420)	
19	COUPLING	½" THIN WALL CONDUIT COUPLING	LOCAL	
18	SUPPORT TUBING	½" THIN WALL CONDUIT (.706 O.D., .040 MIN WALL	LOCAL	
17	FENCE FABRIC, CHAIN LINK (ONLY FOR 500 CU.FT. ASSEMBLY)	9 (0.148) GA. 2" MESH VINYL COATED (SEE NOTE 2 SHEET 1	ANCHOR POST PRODUCTS	2
16	TUBING - FLEXIBLE	SUCH AS: NEOPRENE, 1/16 WALL PER ASTM D-2000 OR SPIRALITE 150 PSI (LOW TEMP) 1½" - 2" OR 2½"	MINOR RUBBER CO. INC. PACIFIC ECHO CO.	
15	PIPE FITTINGS - PLASTIC	PVC SCH 40 PER ASTM D-2466	NO PUR FROM US OR LOCAL PLUMBING SUPPLY	
14	TUBING - RIGID	PVC TYPE 1, 1" 100 PSI RATING (1.315 O.D., 1.175 I.D.) PER ASTM D-2241	CHARLOTTE PLASTICS CROSLINE PLASTIC PIPE CO. HARVEL PLASTIC INC. PLASTIC NAT'L SYSTEMS JACOBS PLASTIC PIPE CO.	
13	ADAPTER - PIPING	SEE SHEET 3 - DETAIL A	MACHINE SHOP OR MOLDING	
12	HANGER	SEE SHEET 1 - DETAIL C	PLASTIC INJECTION MOLDER	3
11	NUT (WITH SPRING)	P/N A1008 (3/8-16 THD) GLOTTO-GALVANIZED	UNISTRUT CORP.	3
10	BRACKET	UNISTRUT P/N A1026 GALVANIZED 2 OZ/FT²	UNISTRUT CORP.	3
9	SUPPORT - HORIZONTAL - MODIFIED	SEE NOTE A - SHEET 1	UNISTRUT CORP.	113 3
8	SUPPORT - HORIZONTAL	UNISTRUT CHANNEL A5000, 83½" LENGTH - HOT DIP GALVANIZED	UNISTRUT CORP.	3
7	SUPPORT - VERTICAL	SEE SHEET 1 - DETAIL B	UNISTRUT CORP.	3
6	INSULATION - POLYSTYRENE	10 INCH - 1 LB/CU FT DENSITY	GILMAN BROS.	
5	SEALANT - JOINT	BUTYL RUBBER	CONCRETE SEALANT CO. P/N C.S. 208	
4	COVER - HATCH	SEE SHEET 3	HARTFORD CONCRETE PROD.	
3	TANK SECTION - LEFT END	SEE SHEET 3	HARTFORD CONCRETE PRODUCTS INC.	
2	TANK SECTION - RIGHT END	SEE SHEET 3	HARTFORD CONCRETE PRODUCTS INC.	
1	TANK SECTION - CENTER	SEE SHEET 3	HARTFORD CONCRETE PRODUCTS INC.	
ITEM	DESCRIPTION	MAT'L / SPEC.	POSSIBLE SOURCE	NOTE NO.

PARTS LIST

APPLICATION			
THIS ITEM IS USED ON SUBASSEMBLIES			
DRAWING NO.	NOR ASSY	NO. OF ASSYS	TOTAL
TO MAKE FINAL ASSEMBLY			TOTAL REQ'D.

DO NOT SCALE DRAWING
UNLESS OTHERWISE SPECIFIED DIMENSIONS ARE IN INCHES. TOLERANCES ARE:
.XX ±.01 .XXX ±.
.XXX ±.005 ANGLES ±
MATERIAL AND TREATMENT

SIGNATURE	DIV	DATE
DRAWN [illegible]		3-19-81
CHECKED [illegible]		
ENGINEER APP. [illegible]	LAB	3-19-81
MFG.		
QUALITY		
PROJECT APP.		
SPECIAL APPR.		

Battelle Columbus Laboratories
505 King Avenue Columbus, Ohio 43201 Telephone (614) 424-6424

TITLE: ENERGY STORAGE ASSEMBLY FOR ACES SYSTEM

SIZE E | CODE IDENT. NO. 79986 | DIV. NO. 1049 | DWG NO. JTBX-3981 | REV

SCALE | ACCT. [illegible] | SHEET 1 OF 3

For original sized blueprints, write:

ACES Program Manager
Building 9102-2, Room 101
Oak Ridge National Laboratory
P.O. Box Y
Oak Ridge, Tennessee 37830

REVISIONS				
ZONE	LTR	DESCRIPTION	DATE	APPROVED

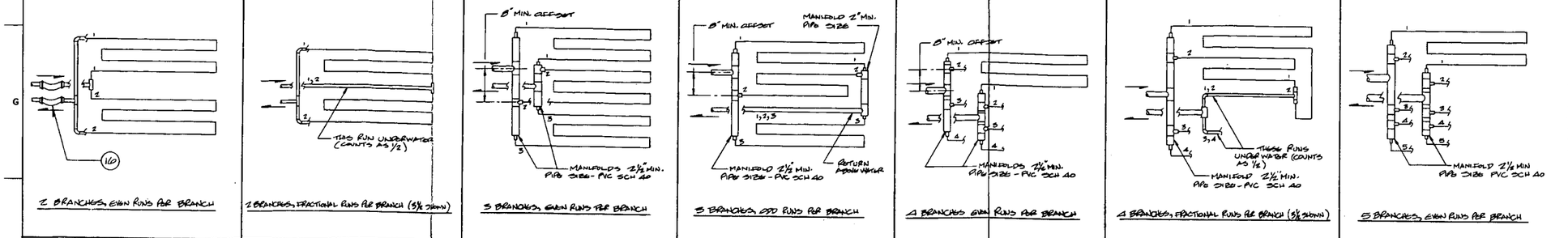

2 BRANCHES, EVEN RUNS PER BRANCH

2 BRANCHES, FRACTIONAL RUNS PER BRANCH (5½ SHOWN)

3 BRANCHES, EVEN RUNS PER BRANCH

3 BRANCHES, ODD RUNS PER BRANCH

4 BRANCHES, EVEN RUNS PER BRANCH

4 BRANCHES, FRACTIONAL RUNS PER BRANCH (5½ SHOWN)

5 BRANCHES, EVEN RUNS PER BRANCH

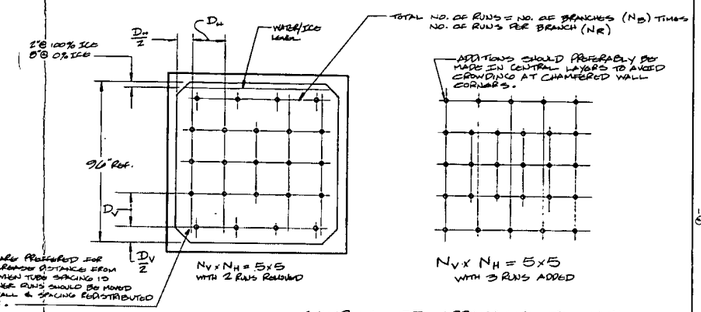

EXAMPLES OF ARRANGEMENTS WITH "NON-SQUARE" MATRICES

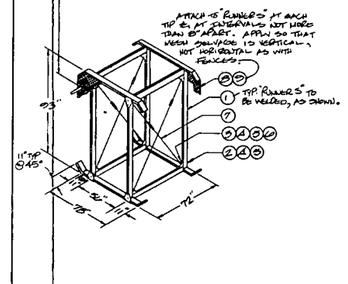

NOTES:
1. VINYL COATING TO BE FUSED TO GALVANIZED WIRE CORE COATING. MINIMUM WIRE STRENGTH SHALL NOT BE LESS THAN 1200 POUNDS. GALVANIZING SHALL BE PER ASTM A-641-712.

ITEM	DESCRIPTION	MOD	MATL / SPEC	POSSIBLE SOURCE	NOTE
9	TENSION BAR	4	¼ x ¾ x 9.5 INCH GALVANIZED (2 oz/ft²)	FENCE SUPPLY	
8	MESH-CHAIN LINK VINYL COATED	864 sq ft	9 (0.148) GA 2 INCH VINYL COATED (SEE NOTE 1)	INDUSTRIAL PRODUCTS	1
7	CABLE/TURNBUCKLE	4	———	HARDWARE SUPPLY	
6	THREAD-FORMING BOLT ½ INCH DIA.	16	———	HARDWARE SUPPLY	
5	BOLT-½ x 1.5 SQ. ELECTRO-GALVANIZED	48	———	UNISTRUT OR LOCAL	
4	NUT-WITH SPRING	48	UNISTRUT P1010	UNISTRUT CORP.	
3	FITTING-BRACE	8	UNISTRUT P1321 GALVANIZED	UNISTRUT CORP.	
2	FITTING-PLATE	8	UNISTRUT P1126 GALVANIZED	UNISTRUT CORP	
1	CHANNEL	12	UNISTRUT P5500 PRE GALVANIZED	UNISTRUT CORP	

TUBE SUPPORT STRUCTURE - 500 CU. FT. TANK

HEAT EXCHANGER ARRANGEMENTS USING 1 INCH 100 PSI RATED PVC TYPE I TUBING (1.315 O.D., 0.0100 WALL)
● L = TOTAL LENGTH OF TUBING, FT (1) ● N_B = NO. OF BRANCHES OR CIRCUITS ● N_R = NO. OF FULL LENGTH RUNS IN EACH BRANCH ● N_V = NO. OF TUBE LAYERS
● N_H = NO. OF TUBE COLUMNS ● D_V = VERTICAL DISTANCE BETWEEN LAYERS ● D_H = HORIZONTAL DISTANCE BETWEEN COLUMNS

RATED VOLUME	TANK SIZE EITHER DIM'S WITH 10 INCH INSULATION				NET PANEL AREA AT 100% ICE (EL.)	10,000 B/HR						30,000 B/HR						40,000 B/HR						50,000 B/HR						60,000 B/HR					
		MODULES REQ'D																																	
V CU. FT.	L x W	LEFT END	CENTER	RIGHT END	SQ. FT.	L FT.	N_B	N_R	$N_V \times N_H$	(2) ADD/SUB	$D_V \times D_H$ IN. x IN.	L FT.	N_B	N_R	$N_V \times N_H$	(2) ADD/SUB	$D_V \times D_H$ IN. x IN.	L FT.	N_B	N_R	$N_V \times N_H$	(2) ADD/SUB	$D_V \times D_H$ IN. x IN.	L FT.	N_B	N_R	$N_V \times N_H$	(2) ADD/SUB	$D_V \times D_H$ IN. x IN.	L FT.	N_B	N_R	$N_V \times N_H$	(2) ADD/SUB	$D_V \times D_H$ IN. x IN.
500	11'-4" x 9'-8"	1	0	1	61.7	550	2	32	8 x 8	0	11.75 x 12.0	830	3	32	10 x 10	-4	9.4 x 9.6	1000	3	41	11 x 11	+2	8.6 x 9.0	1150	3	47	12 x 12	+6	7.8 x 8.0	1300	4	30	12 x 12	-2	7.2 x 6.9
750	15'-9" x 9'-8"	1	1	1	61.7	540	2	21½	7 x 6	+1	13.4 x 16.0	870	3	25	8 x 9	-3	11.75 x 10.7	1130	3	29	9 x 10	-3	10.4 x 9.6	1300	4	26	10 x 10	+4	9.4 x 9.0	1480	5	26	11 x 12	-2	8.6 x 8.0
1000	20'-2" x 9'-8"	1	2	1	61.7	605	2	17½	8 x 6	-1	15.7 x 16.0	930	3	18	7 x 8	-2	13.4 x 12.0	1150	3	23	8 x 9	-3	11.75 x 10.7	1300	4	20	9 x 9	-1	10.4 x 10.7	1430	5	20	10 x 10	0	9.4 x 9.6
1250	24'-7" x 9'-8"	1	3	1	61.7	665	2	14	5 x 5	+3	18.8 x 16.0	870	3	15	7 x 6	+3	13.4 x 16.0	1230	3	19	7 x 8	+1	13.4 x 12.0	1511	4	17½	8 x 9	-2	11.75 x 10.7	1730	5	16	9 x 9	-1	10.4 x 10.7
1500	29'-0" x 9'-8"	1	4	1	61.7	600	2	11½	5 x 5	-2	18.8 x 19.2	930	3	12	6 x 6	0	15.7 x 16.0	1240	3	16	7 x 7	-1	13.4 x 13.7	1450	4	14	7 x 8	0	13.4 x 12.0	1810	5	14	8 x 9	-2	11.75 x 10.7
2000	37'-10" x 9'-8"	1	6	1	61.7	660	2	9½	4 x 4	+3	23.5 x 24.0	1040	3	10	5 x 6	0	18.8 x 16.0	1310	4	9½	6 x 6	+2	15.87 x 16.0	1590	4	11½	7 x 7	-3	15.4 x 13.7	1730	5	10	7 x 7	+1	13.4 x 13.7
2500	24'-7" x 19'-4"	2	6	2	61.7/61.7	610	½	14	4 x 4	-2	23.5 x 24.0	990	½	11½	5 x 5	-2	18.8 x 19.2	1360	½	15½	5 x 6	+1	18.8 x 18.0	1550	½	18	6 x 6	0	15.7 x 16.0	1810	½	14	6 x 7	0	13.7 x 13.7
3000	29'-0" x 19'-4"	2	8	2	61.7/61.7	620	½	12	4 x 3	0	23.5 x 32.0	1040	½	10	4 x 5	0	23.5 x 19.2	1400	½	13½	5 x 5	+2	18.8 x 19.2	1610	½	15½	6 x 5	+1	15.7 x 19.2	1870	½	12	6 x 6	0	15.7 x 16.0
3500	33'-5" x 19'-4"	2	10	2	61.7/61.7	725	½	12	4 x 3	0	23.5 x 32.0	1130	½	9½	4 x 5	-1	23.5 x 19.2	1390	½	11½	5 x 5	-2	18.8 x 19.2	1630	½	13½	5 x 5	+2	18.8 x 19.2	1895	½	11	6 x 6	-3	15.7 x 16.0
4000	37'-10" x 19'-4"	2	12	2	61.7/61.7	690	½	10	3 x 3	+1	31.33 x 32.0	1040	½	7½	4 x 4	-1	23.5 x 24.0	1380	½	10	4 x 5	0	23.5 x 19.2	1640	½	12	5 x 5	-1	18.8 x 19.2	2010	½	10	5 x 6	0	18.8 x 16.0

NOTES:
1. INCLUDES LENGTHS WHICH CONNECT RUNS AT ENDS.
2. ADD OR SUBTRACT THIS NUMBER OF RUNS FROM THE $N_V \times N_H$ MATRIX TO OBTAIN CORRECT NUMBER OF TOTAL RUNS. SCATTER THE ADDITIONS/REMOVALS AMONG THE HORIZONTAL "LAYERS" AND DISTRIBUTE THE RUNS TO OCCUPY THE FULL TANK WIDTH AS WITH FULL "LAYERS" (SEE ABOVE EXAMPLES)
3. MAIN SECTION OF HEAT EXCHANGER TO BE ISOLATED FROM SUPPLY & RETURN PIPING WITH APPROPRIATE LENGTHS OF FLEXIBLE TUBING. PARTS LIST ITEM 10

FIND NO.	QTY.	PART NO. OR IDENTIFYING NO.	DWG. SIZE	DESCRIPTION	SPECIFICATION	NOTE NO.

PARTS LIST

APPLICATION	DO NOT SCALE DRAWING	SIGNATURE	DIV	DATE
THIS ITEM IS USED ON SUBASSEMBLIES	UNLESS OTHERWISE SPECIFIED DIMENSIONS ARE IN INCHES. TOLERANCES ARE:	DRAWN BY	209	9-17-81
DRAWING NO. / PER ASSY / NO. OF PARTS / TOTAL	.XX = .XXX =	CHECKED BY		
	.XXX = ANGLES =	ENGINEER	VA	3-18-81
	MATERIAL AND TREATMENT	APPR.		
TO MAKE FINAL ASSEMBLY		APPR.		
TOTAL REQ'D		PROJECT APPR.		
		SPECIAL APPR.		

Battelle Columbus Laboratories
505 King Avenue, Columbus, Ohio 43201, Telephone (614) 424-6424

TITLE: ENERGY STORAGE ASSEMBLY FOR ACES SYSTEM

SIZE	CODE IDENT. NO.	DIV. NO.	DWG. NO.	REV.
E	79986	209	UTLEX-3981	

SCALE — ACCT. 0004.1-0701 SHEET 2 of 3

For original sized blueprints, write:

ACES Program Manager
Building 9102-2, Room 101
Oak Ridge National Laboratory
P.O. Box Y
Oak Ridge, Tennessee 37830

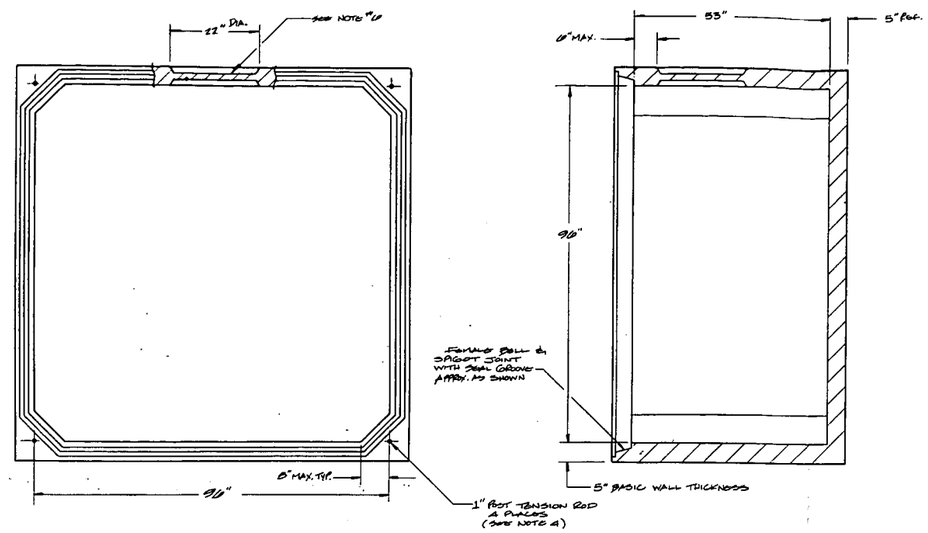

TANK SECTION – RIGHT END

APPROX. WEIGHT 15,100 LBS. – 250 RATED CU.FT.

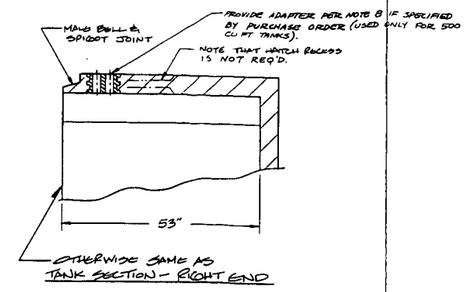

TANK SECTION – LEFT END

APPROX. WEIGHT 14,300 LBS.

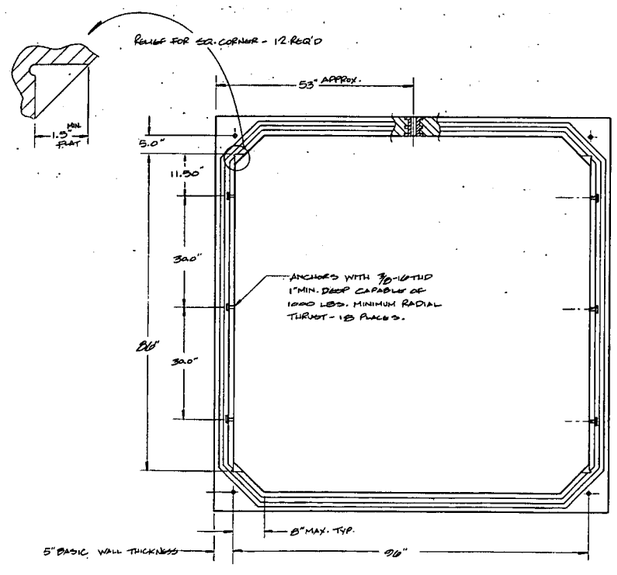

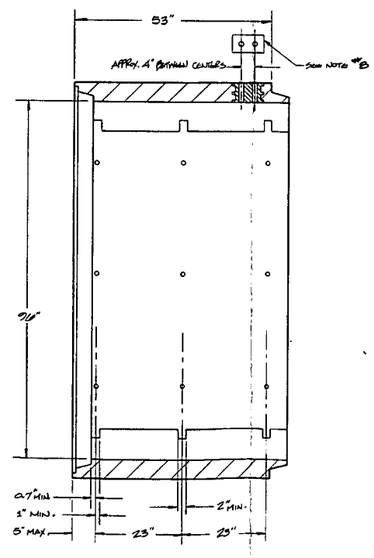

TANK SECTION – CENTER

APPROX. WEIGHT 9800 – 250 RATED CU.FT.

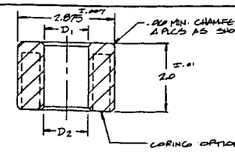

PIPE SIZE	AVE. O.D. (REF)	D_1	D_2
1	1.315	$1.330^{\pm.005}$	$1.310^{\pm.005}$
2	1.900	$1.915^{\pm.005}$	$1.894^{\pm.005}$
3	2.375	$2.395^{\pm.005}$	$2.369^{\pm.005}$

DETAIL-A

• ADAPTER-PIPING •
(MAKE FROM RIGID PVC)

REVISIONS

ZONE	LTR	DESCRIPTION	DATE	APPROVED

NOTES:

1. DESIGN TO BE IN ACCORDANCE WITH ASTM C858-78 AND THE REQUIREMENTS OF THE AMERICAN CONCRETE INSTITUTE BUILDING CODE ACI 318-77. CONCRETE STRENGTH: 28 DAY COMPRESSIVE (F'c): 4500 PSI MIN. REINFORCING STEEL STRENGTH: TENSILE YIELD (Fy): 60,000 PSI MIN.
2. REINFORCING STEEL MEMBERS ARE TO BE MIG WELDED TO EACH OTHER BEFORE CONCRETE PLACEMENT TO ASSURE PROPER POSITIONING.
3. MUST WITHSTAND 3 FOOT EARTH COVER AT 130 LBS PER CU.FT MAX.
4. TANK WILL NOT BE EMPTIED WHEN GROUND WATER IS PRESENT.
5. POST TENSIONING RODS TO HAVE PROVISION FOR SUCCESSIVE COUPLING OF TANK SECTIONS AND SUBSEQUENT GROUT FILL ALONG ENTIRE LENGTH. MIN ROD ULTIMATE STRENGTH: 140,000 PSI. ROD GRIP REPRESENTATIONS PER ASTM-A615-75.
6. PUSH-OUT ACCESS HATCH SECTION TO BE PROVIDED. SEALABLE COVER SHALL BE PROVIDED, IF SPECIFIED. DESIGN OF COVER AND SEAL TO BE APPROVED BY PURCHASER BEFORE MANUFACTURE.
7. APPROPRIATE LIFTING FEATURES ARE TO BE PROVIDED. SUCH FEATURES SHOULD PREFERABLY BE RECESSED OR REMOVABLE ACCESSORIES WHICH DO NOT EXTEND ABOVE THE FLAT EXTERIOR SURFACES (SO THAT APPLIED SHEETS OF INSULATION NEED NOT BE FITTED).
8. ADAPTERS OF RIGID PVC TO BE PROVIDED WHICH ALLOWS SOLVENT WELDING OF RIGID PVC PIPE OF 2.875 INCH O.D. TO BOTH SIDES OF TANK WALL. (SOCKET TAPERED FROM 2.830 ± .007 DIA. AT MOUTH TO 2.800 ± .007 DIA. AT BOTTOM, EACH SIDE). SEE VIEW-A, SHEET 3
9. EXCEPT FOR THE UPPER HORIZONTAL SURFACE, ALL INTERIOR TANK SURFACES ARE TO BE COVERED WITH A TIGHTLY-BONDED NEOPRENE FILM NO LESS THAN 0.040 INCHES THICK

FIND NO.	QTY.	PART NO. OR IDENTIFYING NO.	DWG SIZE	DESCRIPTION	SPECIFICATION	NOTE NO.

PARTS LIST

APPLICATION	DO NOT SCALE DRAWING	SIGNATURE	DIV	DATE
THIS ITEM IS USED ON SUBASSEMBLIES	UNLESS OTHERWISE SPECIFIED DIMENSIONS ARE IN INCHES. TOLERANCES ARE:	DRAWN		
DRAWING NO. / NEXT ASSY / NO. OF ASSYS / TOTAL	.XX = .XXX =	CHECKED		
	.XXX = ANGLES =	ENGRS. APPR.		
	MATERIAL AND TREATMENT	APPR.		
TO MAKE FINAL ASSEMBLY / TOTAL REQ'D		APPR.		
		PRODUCT. APPR.		
		SPECIAL APPR.		

Battelle Columbus Laboratories
505 King Avenue Columbus, Ohio 43201 Telephone (614) 424-6424

TITLE ENERGY STORAGE ASSEMBLY FOR ACES SYSTEM

SIZE	CODE IDENT. NO.	DIV. NO.	DWG. NO.	REV.
E	79986	049	UTLBX-3981	

SCALE | SHEET 3 OF 3

For original sized blueprints, write:

ACES Program Manager
Building 9102-2, Room 101
Oak Ridge National Laboratory
P.O. Box Y
Oak Ridge, Tennessee 37830

these structures the joints between modules are usually horizontal. However, success has also been obtained when modules with vertical joints are held together with steel tension rods, and this arrangement is the one considered herein.

The Hartford Concrete Products Company of Hartford City, Indiana, was very helpful in developing information needed for this investigation. The configurations of the precast tank sections are based on their necessarily brief study of feasibility. Bell Laboratories of Chester, Pennsylvania, was also quite helpful in discussing (1) general aspects of sealed manholes and (2) geographic locations of capable pre-casters.

Phase II Design Features

Two important revisions have been made to the arrangement as suggested in Phase I.

(1) The components which close the ends of the tanks are now cup-shaped rather than plate-like. A knowledgeable pre-caster expressed concern for the strength and safe shipment of a flat concrete plate of this size and shape. Also, although some installation procedures may have been simplified somewhat, the plate closures represented sections to be lifted, placed, and sealed that possess no encompassed volume, or "payload". Although only short flanges would need to be provided to achieve adequate strength, full 250 cubic foot rated sections are selected, to minimize costs.

(2) Vertical placement of the heat exchanger tubes is changed to horizontal. In one basic sense, a vertical tube direction is perhaps ideal, allowing buoyancy loads to be resisted by tension rather than bending. Also, when ice melting begins, the ice logs are held either by the looped ends of the pipes or by the ceiling structure, and no substantial impacts of ice chunks on tubes should occur. However, cost penalties arise. The average numbers of tube runs, elbows, and attachments would be increased. Also, the various positions of tube attachments are essentially infinite, although definable for a particular application, and this may be difficult to contend with. Although some practical scheme for vertical tube axes may ultimately be found, the present design specifies horizontal axes.

Basic Tank Dimensions. Considerations of a number of factors, which include present practices of manufacture, transportation, and installation, lead to the selection of 250 rated cubic feet as a basic module size, with inside dimensions of 96 x 96 x 53 inches and walls of 5 inch thickness. Up to a total capacity of 2000 cubic feet the modules are joined end-to-end in 250 cubic foot increments. From 2000 to 4000 cubic feet, a 500 cubic foot increment is provided by dual, equal length tanks that are adjacent to each other. If finer increments are required, the modules could be provided in 200 and 300 cubic foot sizes (by relatively simple auxiliary tooling inserts) to obtain increments that would be essentially 100 cubic feet for single tanks and 200 cubic feet for dual tanks.

The 5-inch wall thickness has been estimated to be the practical minimum for this basic arrangement, and does not allow for the heavy vehicle loads withstood by the utility manholes.

Tank Module Joints. The tank modules nest together by means of bell and spigot joints common to this type of construction. As part of this joint a groove is formed to receive a specialized elastic sealant material, which forms a compliant, adhesive joint as the modules are pulled together.

Tension Rods. At the four corners of the tank module, steel tension rods with connecting features are provided, to allow the modules to be pulled together and unitized. These rods are of a type commonly used in "post-tensioned" building structures. Their substantial axial loads must be distributed to the concrete over a reasonable thrust area, and this fact accounts for the "chamfers" of tank interior corners. These features intrude into the useable interior space but are believed preferable to a complication of the exterior contour of the tank modules.

Normally the tube space around the tension rod is pumped full of grouting, both to develop full, rated strength and to protect the steel from corrosion. A 20-year life expectancy may not require that this operation, with its specialized pump, be performed.

Tank Waterproofing. There appears to be some controversy over the need for auxiliary waterproofing of the tank wall. Both a major manufacturer and the major user of tank modules claim that the effective permeability of sound walls is nil, due to the dense structure that results from the vibrated concrete. Tests are claimed to have shown no water penetration for a 3-year immersion in water.

The walls can, however, develop hairline cracks which will allow water leakage if full penetration occurs. This would most likely be caused by an imperfectly prepared or unstable base. The compliant foam base of this application should provide very uniform support pressure.

A waterproofing coating for the walls will contribute substantial cost. A suitable coating material must be elastic at 32 F and of significant thickness, if it is to accept and bridge any cracks which form, A 40-mil, fluid-applied neoprene coating is specified, at an estimated cost of $1.50 per square foot, which perhaps is optimistic.

Tube Support Structure. Horizontal steel beam members are provided to support the heat exchanger tubes and their buoyancy loads, except for the 500 cubic foot tank which is discussed separately below. The tubes are positioned beneath the beams so that an only thrust load is produced and tube attachments are only incidental. Reactions at the ends of the beams are transmitted to vertical steel members at the tank walls. The steel members and the associated fasteners are specialized, proprietary components which allow infinite positioning and provide strong clamping action.

For long tanks with close tube spacing, a progressive attachment of tubes in their final position is not possible, and a special procedure is planned. The snap-in tube hangers are intended to be easily moved in the lateral direction. The tubes can then be placed closely together temporarily during assembly, and then be moved to their desired positions after the workers withdraw to the tank ends.

Although the number and placement of the tube supports is generally optional, the tubes which extend into the end sections must necessarily be cantilevered.

For the 500 cubic foot tank a special tube support system is required, because the heat exchanger must be free-standing to allow the two tank modules to be assembled around it. Sheet 2 of the detail drawing describes the planned structure. A steel frame is assembled on which two lengths of chain link mesh are attached. The heat exchanger tubes are inserted through the mesh at the desired average spacing and elbows and cross connections are applied. When complete, the assembly is placed into the left end tank module, which will contain connections for the brine supply and return lines, and the right end tank module is installed. Buoyancy loads are accepted by thrusts of the heat exchanger structure against the tank ceiling.

Restraint Nets. As with the other concepts, two horizontal nets are provided to restrain large ice chunks which could become loose.

Manufacturing Methods

The only specialized method involved in this concept is the important prefabrication of the concrete tank modules, which is presently used for utility manholes and similar large precast components.

Large basket-like structures are formed of reinforcing steel. Some manufacturers hold the members together with wire ties while others weld them together, and it is important that the steel remains properly positioned in subsequent operations.

The reinforcing assembly is placed into a large, complex steel mold. While a carefully controlled concrete mix is applied, the entire unit is vigorously vibrated to assure a dense, void-free structure.

Curing is accelerated by added heat and by insulation against heat loss, so that the residence time on the mold is shortened.

The mold usually is constructed to be collapsible, so that "draft" need not be provided and undercuts are possible. It is common for a variety of inserts to be placed as part of the manufacturing procedure, such as threaded fasteners or sleeves to receive conduit or pipe. Also, thin sections can be provided, to allow optional "knock-outs".

Installation Methods

Perhaps the least costly method of placing the large tank modules is by use of the manufacturers' specialized "stick boom" trucks. The boom must have sufficient head room to lift the module and capacity to reach to the center of the intended position while supporting the weight. Some of the manufacturers do not have capacity for sections of the dimensions and weights considered here, but there is no known reason to prevent the building of such equipment if demand for it is sufficient.

An outline of the sequential procedures for installing the complete energy storage assembly appears in Appendix D.

Cost Factors

Costs are estimated for four tank volumes, with both the smallest and largest heat exchanger for each. The detailed estimates appear in Appendix C, and comparisons to other concepts can be made from Table 6 and Figures 8 and 9.

The major contributions of cost for two tank sizes are listed in Table 10. Obviously the tank modules are prominent, along with costs for waterproofing and placement. Delivery could assume considerable importance for many locations distant from tank manufacturers. However, it could be theorized that many other concrete precasters might add such large modules as these to their lines, if demand was expressed, and that mean delivery distances would then diminish. Also, with heavy demand, manufacturers might become more resourceful and competitive than at present, where a commercial, noncompetitive interest is usually being served.

In this concept also, large tank volumes are penalized in insulation costs, due to unfavorable area/volume ratios for the nominal, 8-foot water depth.

Capable Suppliers and Installers

Important suppliers of precast utility manholes are well distributed throughout the nation. Figure 14 shows the approximate locations of present manufacturing sites, although others may also exist. Appendix E lists the identified sources.

Generally the manufacturers arrange for delivery and often for placement. There is merit, of course, in assigning responsibility to one party. Near any urban area, however, there should be an erection contractor capable of placing the tank units, the maximum weight of which is 7-1/2 tons.

The only other specialized part is the snap-in tube hanger, which can readily be produced by any injection molder. Several are also listed in Appendix E.

TABLE 10. SIGNIFICANT COST CONTRIBUTORS, UTLBX CONCEPT (REFERENCE TABLE C-3)

Rated Water Volume, cu.ft.	500		4,000	
Base Cost, with 18K heat exchanger	$6170		26,260	
Excavation	10.9%		5.0%	
Insulation	13.8		19.2	
Tank modules				
Basic module, FOB	31.8	56.2	31.4	51.7
Membrane waterproofing	8.1		7.7	
Delivery @ 100 miles from factory	4.1		4.8	
Placement @ 20 miles from erector	12.2		7.8	
Tank joint sealant	0.9		2.7	
Manhole and cover	4.1		1.0	
Backfill and grading	4.9		1.7	
Heat exchanger, 18K				
Support structure	5.7		3.4	
Tubing	2.8		0.8	
Additions, to obtain 60K heat rate				
Tubing	4.7		1.6	
Elbows	3.7		0.5	

Notes:

(1) Numerals indicate full ACES annual coefficient of performance for a 1800 sq.ft., well-insulated house. Reference: ORNL-DWG 79-16634.

(2) Other manufacturing sites may exist.

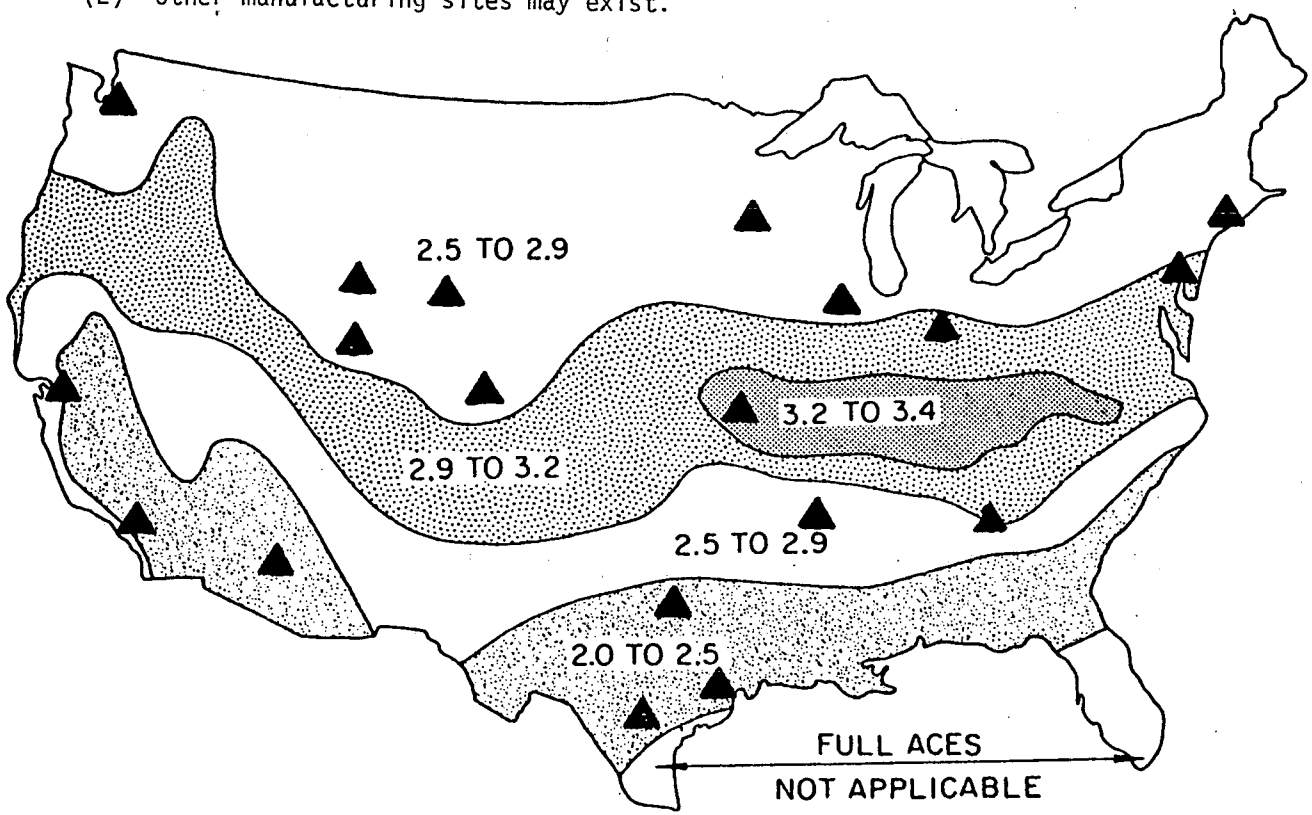

FIGURE 14. LOCATIONS OF PRECAST UTILITY VAULT MANUFACTURING SITES, RELATIVE TO REGIONS OF FULL ACES APPLICABILITY

APPENDIX A

PRELIMINARY DESIGN AND PRELIMINARY COST ESTIMATES

for

SIX ACES ENERGY STORAGE ASSEMBLIES

of

THREE BASIC SIZES

APPENDIX A

TABLE A-1. PRELIMINARY DESIGN OF CONCEPT ORNLFF, 3 SIZES

Description - Site-constructed, in-ground tank, Foam-Form® walls, polystyrene auxiliary insulation, vinyl liner, internal concrete ballast, thermoplastic pipe heat exchanger.
(Ref.: ORNL/CON-43 Report, page 75 and Figure 2)

Target rated water volume, cu.ft.	500	2000	4000
Target gross volume, cu.ft.	600	2400	4800
(Heat exchanger 5%, water expansion 9%, head space 6%)			
Wall height, gross			
Block units, Foam-Form blocks*	7	7	7
Feet	9.33	9.33	9.33
Wall height losses, ft, due to			
Insulation (2 @ 10 in.), top and bottom	1.67	1.67	1.67
Ballast, 8 inch	.67	.67	.67
Net wall height, ft	7	7	7
Required net inside dimensions, if square, ft	9.3	18.5	26.2
Wall thickness @ R-40 rating, ft	1.33	1.33	1.33
Outside wall dimensions, if square, ft	12	21.2	28.9
Selected outside wall dimensions, ft	12 x 12	22 x 22	28 x 30
Net gross volume, cu.ft.	609	2618	4850
Actual rated water volume, cu.ft.	507.5	2182	4042
External surface area of insulation, sq.ft.	740	1790	2760
Surface/volume ratio, sq.ft. per rated cu.ft.	1.45	0.82	0.69
Water level elevation increase @ 9 percent volume expansion, inch	6.3	6.3	6.3

* ®Foam-Form Canada Limited.

TABLE A-2. PRELIMINARY COST ESTIMATE OF CONCEPT ORNLFF, 3 SIZES

Nominal rated water volume, cu.ft.	500	2000	4000
Actual rated volume, cu.ft.	507.5	2182	4042
Cost item/reference basis		Cost, $	
Excavation	310	410	550
$280 plus $1.5 per cu.yd.*			
Footer	200	320	390
$65 per cu.yd.			
Gravel fill, 8 inch	100	100	150
$8 per cu.yd., $100 min.			
Walls, R-20 integral insulation, reinforced concrete, waterproofed	1680	3080	4060
$20 per block ($3.8 per sq.ft.)			
Added pilasters, block, reinforced grout fill (2 per wall x 4 walls)	--	900	900
$12 per vertical lin. ft.			
Insulation, floor, roof, walls for R-40 rating, polystyrene molded bead board, 10/10/5 inch, respectively	390	1200	1960
$0.11 per board ft. plus			
$0.16 per sq.ft.			
Liner, PVC, 20 mil	250	410	550
$150 plus $0.25 per sq.ft.			
Concrete floor with hooks, 8 inch	190	580	990
$70 plus $55 per cu.yd.			

* The practice followed in estimating these cost data is to round off many of the multipliers to the nearest 10¢, e.g., $1.5 in lieu of $1.50; and round off the resulting product to the nearest $10, e.g., $310 in lieu of $313.80.

TABLE A-2. (CONTINUED)

Heat exchanger, 40,000 BTU per hr, in place, ready	820	950	1020
$100 plus $0.8 per lin. ft.			
Deck, precast reinforced concrete slabs with one porthole and cover (no earth cover permitted)			
4 inch - $150 plus $2.5 per sq.ft.	510		
6 inch - $150 plus $4 per sq.ft.		1940	3460
Backfill, grade			
$50 plus $1 per perimeter ft.	100	140	160
Total cost (less water, brine)	$4,550	$10,030	$14,190
Cost per rated cubic foot	$8.97	$4.60	$3.54
Auxiliary values, as-constructed (see assumptions which follow)			
As an on-grade slab (patio)	220	730	1260
$1.5 per sq.ft.			
As a footed, on-grade slab (garage, carport)	750	1700	2540

TABLE A-2. (CONTINUED)

Cost reduction through integration with building (see assumptions which follow)			
Excavate with other necessary excavation (this factor is incorporated below)	-280	-280	-280
Outdoor tank, sharing exterior wall/walls with a 7-foot basement. (Auxiliary values above could be added here, if desired, except subtract $11 per foot of shared wall for footed slab.)		1 Wall	
	-530	-720	-870
		2 Walls	
	-680	-1160	-1460
Indoor tank, sharing exterior wall/walls with footed grade slab building		1 Wall	
	-940	-2290	-3730
		2 Walls	
	-1080	-2590	-4050
		3 Walls	
	-1220	-2780	-4370
		4 Walls	
	-1360	-3020	-4690
* * * * *			
Lowest Resulting Net Cost With Integration (Indoor tank, sharing 4 walls)	$3190	7010	9500
Lowest Resulting Cost/Volume Ratio, $ per cu.ft.	$6.29	$3.21	$2.35

Basis for Auxiliary Values and Cost Reduction Through Integration - Concept ORNLFF

The assumptions made and values used for this concept are:

(1) Excavate with other necessary excavation - The mobilization and demobilization cost ($280) may be deleted.

(2) Outdoor tank, sharing exterior wall/walls with a building having a 7-foot basement

- (a) One wall might be shared with any building of sufficient size. Two walls might be shared with an L-shaped building.
- (b) Delete footer excavation mobilization ($280) plus pro-rata footer cost.
- (c) Increase wall thickness from 8 to 12-inch block for added strength and to provide ledge for necessary decking. (Δ = $1 per sq.ft. = $7 per lin. ft.)
- (d) Increase wall height from 7 to 9.33 feet @ $3.5 per sq.ft. = $8 per lin. ft.
- (e) Delete Foam-Form® wall @ $3.8 per sq.ft. = $35.5 per lin. ft.
- (f) Increase R-20 auxiliary insulation to R-40 @ $0.11 per board foot = $5.1 per lin. ft.
- (g) Delete pro-rata backfill and grading costs.
- (h) Assume initially that pilasters are not increased in number or size. (Lack of earth backfill and habitation of adjacent area may negate this assumption eventually.)

(3) Indoor tank, under inhabited or accessible space that would ordinarily have been built on a footed grade slab.

(a) One or more walls might be shared if building is of sufficient size. Four shared walls implies that the building will be identical in plan form to the tank.

(b) Delete footer excavation mobilization ($280), pro-rata footer cost, and backfill and grading costs.

(c) Delete gravel fill cost.

(d) Delete 3 foot laid up block wall (average frost depth) @ $7.5 per lin. ft.

(e) Delete ground slab @ $1.5 per sq.ft.

(f) Delete deck

(g) Add beam for wood-framed overhead floor (not required for small tank): $8 per ft.

(h) Add framed floor joists and 2 ply sub-floor @ $1.8 per sq.ft. (includes access port).

(i) Add vapor barrier at $0.15 per sq.ft.

(j) Add lid insulation support ($10-40).

TABLE A-3. PRELIMINARY DESIGN OF CONCEPT RSVR, 3 SIZES

Description - Site-constructed, in-ground tank, earth-supported walls, polystyrene insulation, vinyl liner, external concrete ballast, thermoplastic pipe heat exchanger, galvanized steel deck. (Ref.: Figure 3)

Target rated water volume, cu.ft.	500	2000	4000
Target gross volume, cu.ft. (Heat exchanger 5%, water expansion 9%, head space 6%)	600	2400	4800
Selected dimensions of pool at liner, H x W x L, ft (at top)	6 x 16 x 16	8 x 24 x 24	8 x 32 x 32
(Resulting floor dimensions at liner, W x L)	4 x 4	8 x 8	16 x 16
Net gross volume, cu.ft.	672	2220	4780
Actual rated water volume, cu.ft.	560	1850	3983
Area of liner, sq.ft.	356	788	1342
Area of lid, sq.ft.	256	576	1024
Area of insulation, sq.ft.	700	1490	2470
External surface area of insulation, sq.ft.	750	1570	2650
Surface/volume ratio, sq.ft. per rated cu.ft.	1.34	0.85	0.67
Water level elevation change at 9 percent volume expansion, inch	2.4	3.5	4.2

TABLE A-4. PRELIMINARY COST ESTIMATE OF CONCEPT RSVR, 3 SIZES

Nominal rated water volume, cu.ft.	500	2000	4000
Actual rated volume, cu.ft.	360	1850	3983
Cost/item/reference basis		Cost, $	
Excavation	310	410	550
$280 plus $1.5 per cu.yd.			
Sloped wall refinement and sill form preparation	400	490	590
$200 plus $3 per perimeter ft			
Gravel/sand fill, 8 inch	100	100	100
$8 per cu.yd., $100 min.			
Ballast			
Hold-down fittings	50	80	130
$5 each (placed)			
Concrete floor			
$70 plus $65 per cu.yd.			
7 x 7 x 0.7 plus 4 pads	300		
14 x 14 x 0.7		390	
22 x 22 x 0.5			650
Sill, hand formed, with reinforcement			
2.5 x 0.7 ft	440	640	830
$6 per perimeter foot			
Insulation, floor, roof, and walls, R-40 rating, polystyrene molded bead board, 10 inch	1020	2180	3610
$1.46 per sq.ft. ($0.11 per board ft plus 10 percent scrap plus $0.25 installation			

TABLE A-4. (CONTINUED)

Liner, PVC, 20 mil			
$150 plus $0.25 per sq.ft.	240	350	490
Heat exchanger, 40,000 BTU per hr, in place, ready	820	950	1020
$100 plus $0.8 per lin. ft			
Beam, wood, preservative treated			
20 ft, 4 x 14 inches (2 member) @ $5 per ft	100		
28 ft, 9 x 12 inches (3 member) @ $10 per ft		280	
36 ft, 12 x 12 inches (3 member) @ $12 per ft			430
Deck, roll formed steel, galvanized			
20 gage; 3-inch pattern	630	1220	
$50 plus $1.6 per sq.ft.			
16 gage; 3-inch pattern			2870
$50 plus $2.3 per sq.ft.			
Grade, cleanup	120	150	170
$50 plus 0.8 per perimeter ft.			
Total cost (less water, brine)	$4,530	$7,250	$11,440
Rated volume, cu.ft.	560	1850	3983
Cost per rated cubic foot	$8.09	$3.92	$2.87
Auxiliary value, as-constructed (see assumptions which follow)			
As an unfinished, on-grade slab (patio)	360	730	1220
$1 per sq.ft. of deck			

TABLE A-4. (CONTINUED)

Cost reduction through integration with building (see assumptions which follow)			
Excavate with other necessary excavation (this factor is incorporated below)	-280	-280	-280
Outdoor tank, sharing exterior wall/walls (no substantial additional savings)	-280	-280	-280
Indoor tank, within exterior walls of building that would otherwise be built on a footed grade slab	-1240	-1940	-3690
* * * * *			
Lowest Resulting Net Cost with Integration (Indoor tank)	3290	5310	7750
Lowest Resulting Cost/Volume Ratio, $ per cu.ft.	5.88	2.87	1.95

Basis for Auxiliary Values and Cost Reduction Through Integration - Concept RSVR

(1) As an on-grade panel the metal decking requires a finishing layer, such as poured concrete (must be light weight, as with vermiculite aggregate), and the full slab value of $1.5 per square foot is thus reduced to $1. The 50 pounds per square foot loading required for passenger vehicles is not attainable economically, at least with the two larger tanks, and auxiliary value as a footed slab is not present.

(2) Excavate with other necessary excavation - The mobilization and demobilization cost ($280) may be deleted.

(3) Outdoor tank, sharing exterior wall/walls with a building with footed grade slab - The savings of sill and grading costs are offset by the added thickness of wall required to support the deck.

(4) Indoor tank, under inhabited or accessible space that would ordinarily have been built on a footed grade slab.

   (a) Building must be of sufficient size to allow footers to be placed well away from all tank edges.

   (b) Assume a framed wood floor with vapor barrier essentially cancels a ground slab with gravel fill at $1.8 per sq.ft. (Beam cost, as needed, remains.)

   (c) Delete the deck but not any beam.

   (d) Reduce the sill cost from $6 to $3 per lineal foot.

   (e) Add lid insulation support ($10-40).

TABLE A-5. PRELIMINARY DESIGN OF CONCEPT SWPL, 3 SIZES

Description - Identical to Concept RSVR except with 3.5 ft vertical steel panel walls at perimeter, with bracings, as in conventional residential swimming pool construction. (Ref.: Figure 4)

Target rated water volume, cu.ft.	500	2000	4000
Target gross volume, cu.ft. (Heat exchanger 5%, water expansion 9%, head space 6%)	600	2400	4800
Selected dimensions of pool at liner, H x W x L, ft (at top)	11 x 11 x 7	20 x 20 x 8	27 x 27 x 8
(Resulting floor dimensions at liner, W x L)	4 x 4	11 x 11	18 x 18
Net gross volume, cu.ft.	634	2511	4860
Actual rated water volume, cu.ft.	528	2093	4050
Area of liner, sq.ft.	319	800	1275
Area of lid, sq.ft.	121	400	730
Area of insulation, sq.ft.	512	1299	2160
External surface area of insulation, sq.ft.	564	1427	2257
Surface/volume ratio, sq.ft. per rated cu.ft.	1.07	0.68	0.56
Water level elevation change at 9 percent volume expansion, inch	4.7	5.7	5.9

TABLE A-6. PRELIMINARY COST ESTIMATE OF CONCEPT SWPL, 3 SIZES

Nominal rated water volume, cu.ft.	500	2000	4000
Actual rated volume, cu.ft.	528	2093	4050
Cost item/reference basis		Cost, $	
Excavation	320	420	560
$280 plus $1.5 per cu.yd.			
Sloped wall refinement	270	300	330
$200 plus $1 per perimeter ft.			
Gravel/sand fill, 8 inch	100	100	150
$8 per cu.yd., $100 min.			
Ballast			
Hold-down fittings	50	80	130
$5 each (placed)			
Concrete floor			
$70 plus $65 per cu.yd.			
7 x 7 x 0.7	300		
14 x 14 x 0.7		390	
22 x 22 x 0.5			650
Walls, bracing, backfill	980	1700	2260
$100 plus $20 per perimeter ft.			
Sill, 6 x 18 inch, with reinforcement	200	350	470
$4 per perimeter ft.			
Insulation, floor, roof, and walls, R-40 rating, polystyrene molded bead board, 10 inch	750	2080	3300
$1.46 per sq.ft. ($0.11 per board ft plus 10 percent scrap plus $0.25 installation)			

TABLE A-6. (CONTINUED)

Liner, PVC, 20 mil	230	350	470
$150 plus $0.25 per sq.ft.			
Heat exchanger, 40,000 BTU per hr, in place, ready	820	950	1020
$100 plus $0.8 per lin. ft.			
Beam, wood, preservative treated	--	120	270
$10 per ft.			
Deck, roll formed steel, galvanized	360	900	1490
3 inch, 20 gage			
$50 plus $1.6 per sq.ft.			
Grade, cleanup	90	120	150
$50 plus 0.8 per perimeter ft.			
Total cost (less water, brine)	4470	7860	11,250
Rated volume, cu.ft.	528	2093	4050
Cost per rated cubic foot	8.47	3.76	2.78
Auxiliary value, as-constructed (see note below)			
As an unfinished, on-grade slab (patio)	190	530	930
$1 per sq.ft. of deck			

TABLE A-6. (CONTINUED)

Cost reduction through integration with building (see note below)			
Excavate with other necessary excavation (this factor is incorporated below)	-280	-280	-280
Outdoor tank, sharing exterior wall/walls	-280	-280	-280
(No substantial additional savings)			
Indoor tank, within exterior walls of building that would otherwise be built on a footed grade slab	-720	-1270	-1880
* * * * *			
Lowest Resulting Net Cost With Integration	3750	6590	9370
(Indoor tank)			
Lowest Resulting Cost/Volume Ratio, $ per cu.ft.	7.10	3.15	2.31

Note: Assumptions are identical to those of Concept RSVR, preceding, except sill cost is not reduced.

TABLE A-7. PRELIMINARY DESIGN OF CONCEPT PLYSS, 3 SIZES

Description - Site assembled, above-ground tank, wall panels of stressed skin plywood with glass wool insulation, vinyl liner, rigid frame heat exchanger support, thermoplastic pipe heat exchanger. (Ref.: Figure 5)

Target rated water volume, cu.ft.	500	2000	4000
Target gross volume, cu.ft.	600	2400	4800
(Heat exchanger 5%, water expansion 9%, head space 6%)			
Wall height losses, ft, due to			
Upper brace space	1	1	1
Floor insulation, 10 inch	0.7	0.7	0.7
Selected exterior panel height, ft	10	10	10
Net wall height, ft	8.3	8.3	8.3
Required net inside dimensions, if square, ft	8.6	17	24
Wall thickness at R-40 rating, ft	0.94	0.94	0.94
Selected outside wall dimensions, ft	10.5 x 10.5	19 x 19	26 x 26
Resulting nested panel dimensions, ft	10 x 9.5	10 x 18	10 x 25
Net gross volume, cu.ft.	608	2415	4804
Actual rated water volume, cu.ft.	506.6	2013	4003
External surface area of insulation, sq.ft.	564	1372	2255
Surface/volume ratio, sq.ft. per rated cu.ft.	1.11	0.68	0.56
Water level elevation increase @ 9 percent volume expansion, inch	7.4	7.4	7.4

TABLE A-8. PRELIMINARY COST ESTIMATE OF CONCEPT PLYSS, 3 SIZES

Nominal rated water volume, cu.ft.	500	2000	4000
Actual rated volume, cu.ft.	506.6	2013	4003
Cost item/reference basis		Cost, $	
Excavation	290	290	300
Grade slab	310	800	1500
Formwork @ $1.2 per ft			
Pour, finish slab @ $1.5 per sq.ft.			
Walls, stressed skin plywood, 3/4-inch skins, prefabricated $4 per sq.ft.	1510	2850	3960
Insulation	520	1140	1940
Walls, roof of glass wool @ $0.7 per sq.ft.			
Floor of polystyrene molded bead board, 10 inch @ $1.3 per sq.ft.			
Reinforcing structure; cross ties at bottom, cross braces at top and associated frames for heat exchanger support	120	400	1120
Liner, PVC 20 mil	260	390	530
$150 plus $0.25 per sq.ft.			
Heat exchanger, 40,000 BTU per hr, in-place, ready	820	950	1020
Lid/roof. Shed roof of wood framing, plywood sheathing, vapor barrier, and composition shingles	470	1510	2600
$3 per sq.ft. plus $10 per foot of beam as needed			
Exterior painting	80	140	270

TABLE A-8. (CONTINUED)

Total cost (less water, brine)	4380	8470	13,240
Rated volume, cu.ft.	506.6	2013	4003
Cost per rated cubic foot	8.65	4.21	3.31
Auxiliary value, as-constructed (see assumptions which follow)			
		1 Wall	
As a framed, sheathed, wood wall, 8 foot high	170	300	420
$16 per ft			
Cost reduction through integration with building (see assumptions which follow)			
Excavate with other necessary excavation (this factor is incorporated below)	-280	-280	-280
Outdoor tank, sharing exterior wall/walls	-450	-580	-700
Indoor tank, in a building (no savings, and possibly slight additional costs incurred in buildings of one story, due to redundancy of structures)	--	--	--
* * * * *			
Lowest Resulting Net Cost With Integration	3930	7890	12,540
(Excavate at time of other necessary excavation)			
Lowest Resulting Cost/Volume Ratio, $ per cu.ft.	7.76	3.92	3.13

Basis for Auxiliary Values and Cost Reduction Through Integration - Concept PLYSS

(1) No footer is included for the ground slab. Some codes may require one.

(2) Excavation with other necessary excavation would eliminate the mobilization and demobilization charge ($280).

(3) The sheathed plywood walls could be used for attaching a light structure such as a carport, but only one wall is likely to be useful.

(4) Integrating the wall of an outdoor tank with a served building would require substantial strengthening of conventional wall structures and little savings would result.

(5) Integrating the tank as an indoor unit would require a sub-basement slab, and walls, and a framed, load bearing deck that would provide no substantial net savings and may increase costs.

TABLE A-9. PRELIMINARY DESIGN OF CONCEPT CONCYL, 3 SIZES

Description - Prefabricated, in-ground assembly, horizontal-axis concrete cylinder with factory installed heat exchanger. (Reference Figure 6)

Target rated water volume, cu.ft.	500	2000	4000
Target gross volume, cu.ft.	555	2220	4440
(Heat exchanger 2%, water expansion 9%, no head space)			
Chosen inside diameter, ft,	10.0	10.0	10.0
Required net inside length, ft.	7.07	28.0	56.0
Length additions, ft., due to	2.0	2.5	2.5
End recesses, 2 @ 6 inches			
End bulkheads, 2 @ 6 inches			
Middle bulkhead, heavy, 6 inch each			
Cylinder length, ft.	9.0	30.5	2 @ 30.5
Cylinder wall weight (4 inch), lbs	14,610	49,500	2 @ 49,500
End bulkhead weight (6 inch), total, lbs	11,780	11,780	2 @ 11,780
Lightweight middle bulkhead weight, lbs	1 @ 200	4 @ 200	8 @ 200
Heavy middle bulkhead weight, lbs		5890	2 @ 5890
Total concrete structure weight, lbs	26,590	67,920	2 @ 67,970
Heat exchanger, 40 KBTU/hr			
Required active tube length, ft.	900	1062	2 @ 575
Number of tubes	128	38	2 @ 21
Required gross length, ft.	1200	1200	2 @ 680
Number of elbows	256	76	84

TABLE A-9. (CONTINUED)

Area of insulation, sq.ft.	562	1340	2440
External surface area of insulation, sq.ft.	652	1490	2670
Surface/volume ratio, sq.ft. per rated cu.ft.	1.30	0.75	0.67
Water level elevation increase @ 9 percent, in.	17	17	17

TABLE A-10. PRELIMINARY COST ESTIMATE OF CONCEPT CONCYL, 3 SIZES

Nominal rated water volume, cu.ft.	500	2000	4000
Actual rated volume, cu.ft.	500	2000	4000
Cost item/reference basis		Cost, $	
Excavation	370	540	800
$280 plus $1.5 per cu.yd.			
Concrete structure at $0.06/lb	1600	4080	8160
Insulation, ends and cylindrical shell, R40 rating, polystyrene molded bead board, 10 in.	770	1830	3340 (Butted ends)
$1.37 per sq.ft. ($0.11 per board ft plus 10 percent scrap, plus $0.16 installation)			
Cost of heat exchanger pipe, $0.20 per ft. plus $0.40 per elbow	340	270	310
Installation of pipe and elbows, labor rate $15 per hr	380	150	170
Seal inside surface, $0.60 per sq.ft.	310	750	1500
Plastic inserts and "O" rings, $1 each	260	80	80
Transportation and installation in excavation	250	400	800
Grade cleanup, $50 plus $1.5 per cu.yd.	80	120	200
Total cost (less water, brine)	$4360	8220	15,340
Rated volume, cu.ft.	500	2000	4000
Cost per rated cubic foot	$8.72	4.11	3.84
Auxiliary value, as-constructed	None	None	None

TABLE A-10. (CONTINUED)

Cost reduction through integration with building	$-280	-280	-280
Excavate with other necessary excavation			
(No other substantial reductions are evident)			
* * * * *			
Lowest Resulting Net Cost with Integration	4080	7940	15,060
Lowest Resulting Cost/Volume Ratio, $ per cu.ft.	8.16	3.97	3.77

TABLE A-11. PRELIMINARY DESIGN OF CONCEPT UTLBX, 3 SIZES

Description - In-ground tank, site assembled of prefabricated reinforced concrete modules, joined with steel coupling bars, modular prefabricated heat exchanger. (Reference Figure 7)

Target rated water volume, cu.ft.	500	2000	4000
Target gross volume, cu.ft.	555	2220	4440
(Heat exchanger 2%, water expansion 9%, no head space)			
Number of reinforced concrete tube section modules of dimensions:	2	8	16
Inside: 10 ft high, 7 ft wide, 4 ft long			
Outside: 11 ft high, 8 ft wide, 4.5 ft long (unnested)			
(End dimensions 11 ft high x 8 ft wide, 6-in. thick, reinforced)			
Module arrangement	2 sections in-line, plus 2 ends	8 sections in-line, plus 2 ends	8 sections adjacent to 8 sections, plus 4 ends
Overall length of concrete assembly, ft	9	33	33
Total concrete structure weight, lbs	32,000	86,000	2 @ 86,000
Heat exchanger, 40 KBTU/hr			
Required active tube length, ft	900	1062	2 @ 575
Required gross length, ft	980	1250	1400
Area of insulation, sq.ft.	615	1610	2340
External surface area of insulation, sq.ft.	720	1800	2550
Surface/volume ratio, sq.ft. per rated cu.ft.	1.44	0.90	0.64
Water level elevation increase @ 9 percent, in.	10.6	10.6	10.6

TABLE A-12. PRELIMINARY COST ESTIMATE OF CONCEPT UTLBX, 3 SIZES

Nominal rated water volume, cu.ft.	500	2000	4000
Actual rated volume, cu.ft.	500	2000	4000
Cost item/reference basis		Cost, $	
Excavation	360	530	600
$280 plus $1.5 per cu.yd.			
Concrete structures			
Tube sections	810	3240	6480
Ends	630	630	1260
Coupling bars, steel	30	120	240
Nuts, steel	40	40	80
Sealing @ $0.6 per sq.ft.	250	740	1480
Assembly labor at site	70	220	440
Insulation, ends and rectangular cross-section shell, R40 rating, polystyrene molded bead board, 10 in.	810	2120	3090
$1.32 per sq.ft. ($0.11 per board ft. plus 5 percent scrap, plus $0.16 installation)			
Heat exchanger pipe and elbows	280	350	380
$0.2 per ft. plus $0.4 per elbow			
Heat exchanger assembly	230	270	290
$15 per hr.			
Transportation and installation in cavity at site	250	500	750
Grade, cleanup	150	200	250
$50 plus $1.5 per cu.yd.			

TABLE A-12. (CONTINUED)

Total cost (less water, brine)	$3910	8969	15,340
Rated volume, cu.ft.	500	2000	4000
Cost per rated cubic foot	$7.82	4.48	3.84
Auxiliary value, as constructed	None	None	None
Cost reduction through integration with building	$ -280	-280	-280
Excavate with other necessary excavation			
(No other substantial reductions are evident)			
* * * * *			
Lowest Resulting Net Cost with Integration	$3630	8680	15,060
Lowest Resulting Cost/Volume Ratio, $ per cu.ft.	7.26	4.34	3.77

COMPILATION OF THE ELEMENTAL CONSTRUCTION COSTS USED IN THE OVERALL COST ESTIMATES OF APPENDIX A

The basic construction and material costs used for the overall cost estimation of Appendix A are compiled below. When judged necessary or advisable, deviations from these values were permitted. In general, costs include delivery and installation.

Item	Cost
Backfill, grading	$50 plus $1.5 per cu.yd.
Beam, wood, preservative treated	
4 x 14, 2 member	$5 per ft
8 x 12, 2 member	$8 per ft
9 x 12, 3 member	$10 per ft
12 x 12, 3 member	$12 per ft
Concrete, poured	$70 plus $65 per cu.yd.
Concrete, prefabricated structures, reinforced	
Large cylinder	$0.06 per pound, plus $170 plus $0.16 per rated cu.ft. for delivery, installation
Utility box modules	$0.045 per pound, plus $200 plus $0.25 per rated cu.ft. for delivery, installation
Sealing for above	$0.60 per sq.ft. of interior surface
Decking	
Concrete, precast, reinforced	
4 inch	$150 plus $2.5 per sq.ft.
6 inch	$150 plus $4 per sq.ft.
Steel, roll-formed, galvanized	
3 inch, 20 ga.	$50 plus $1.6 per sq.ft.
3 inch, 16 ga.	$50 plus $2.3 per sq.ft.
Excavation	$280 plus $1.5 per cu.yd.

Item	Cost
Floor, wooden, joists with 2 ply sub-floor (less perimeter support)	$1.8 per sq.ft.
Gravel/sand	$8 per cu.yd., $100 minimum
Heat exchanger, assembled, in place, ready	$100 plus $0.8 per lin. ft.
Wall	
Concrete block	
8 inch	$3.5 per sq.ft.
12 inch	$4.5 per sq.ft.
Foam-Form® block (with reinforced, concrete fill, waterproofing)	$20 per block ($3.8 per sq.ft.)
Plywood panel sandwich	$4 per sq.ft. of wall
Steel, swimming pool (with bracing, sill, backfill)	$100 plus $24 per perimeter
Insulation	
Polystyrene molded bead board	$0.11 per board ft. plus $0.16-$0.25 per sq.ft.
Fiberglass batt, 6 inch	$0.35 per sq.ft.
Liner Assembly	
PVC, 20 mil	$150 plus $0.25 per sq.ft.
Hypalon, 36 mil	$150 plus $0.60 per sq.ft.
Pilasters, block, reinforced grout fill	$12 per vertical foot
Roof, wood framed, with composition shingles	$3 per sq.ft.
Slab, concrete	
Footed (3-foot depth)	$1.5 per sq.ft. plus $11 per perimeter foot
Plain	$1.5 per sq.ft.
Vapor barrier, PE, 4 mil	$0.15 per sq.ft.

APPENDIX B

LISTING OF MANUFACTURERS, COMMERCIAL INTERESTS, AND ASSOCIATIONS WHICH PROVIDED PHASE I INFORMATION

APPENDIX B

LISTING OF MANUFACTURERS, COMMERCIAL INTERESTS, AND ASSOCIATIONS WHICH PROVIDED PHASE I INFORMATION

Blocks, Foam-Form®

Foam-Form Canada, Ltd. (Manufacturer)
Scarborough, Ontario, Canada

Kern, Daniel (Contractor)
Toledo, Ohio

Kaylor Brothers (Distributor)
Findlay, Ohio

Concrete

American Concrete Institute
Detroit, Michigan

Portland Cement Association
Pittsburgh, Pennsylvania

Concrete, Pipe, Large

American Concrete Pipe Association
Vienna, Virginia

National Precast Concrete Association
Indianapolis, Indiana

Ohio Concrete Pipe Association
Columbus, Ohio

Pre-stress Concrete Association
Chicago, Illinois

Price Brothers
Dayton, Ohio

Reliance Universal, Inc.
Columbus, Ohio

Concrete, Poured Walls

J. L. Poured Walls, Inc.
Blacklick, Ohio

Concrete, Sprayed

Allentown Pneumatic Gun Company (Gunite)
Allentown, Pennsylvania

Gene Fausnaugh Associates, Inc. (Contractor)
Columbus, Ohio

Concrete, Utility Boxes, Prefabricated

Hartford Concrete Products, Inc.
Hartford City, Indiana

Insulation, Polystyrene, Rigid

Dow Chemical Company (Skinboard)
Midland, Michigan

Gilman Brothers (Bead-board)
Gilman, Connecticut

W. R. Grace Company
Cambridge, Massachusetts

Insulation, Polyurethane, Rigid

Elliot Company of Indianapolis, Inc.
Indianapolis, Indiana

Polyurethane, Rigid (Spray-On)

Gusmer Corporation
Old Bridge, New Jersey

Rubicon Chemicals, Inc.
Geirmer, Louisiana

Witco Chemical Corporation
New Castle, Delaware

Liners, Tank

Abco Pool Industries, Inc. (PVC)
Flushing, New York

Bel-Aqua Pool Supply, Inc. (PVC)
New Rochelle, New York

Fabrico (PVC)
Chicago, Illinois

Liners, Tank (Continued)

Rad Associates
Salem, Ohio

Staff Industries (Industrial, Commercial)
Upper Montclair, New Jersey

Mesh, Steel, Coated

Acco Industries, Inc.
Monessen, Pennsylvania

Anchor Fence, Inc.
Baltimore, Maryland

Atlantic Steel Company, Chain Link Division
Atlanta, Georgia

Colorguard Corporation
Rariton, New Jersey

B. L. Downey Company, Inc.
Cicero, Illinois

National Fence Mfg. Co., Inc.
Toledo, Ohio

U.S. Steel Supply - Cyclone Fence
Chicago, Illinois

Pipe, Plastic

Bristolpipe, Bristol Corporation
Bristol, Indiana

Charlotte Plastics
Charlotte, North Carolina

Harvel Plastics, Inc.

Plastic National Systems, Inc.
Seguin, Texas

Polyvinyl Piping Company
West Chester, Pennsylvania

Pools, Swimming, and Components

Clayton and Lambert Mfg. Co. (Steel Panels)
Buckner, Kentucky

Heldor Associates
Clifton, New Jersey

KDI Sylvan Pools, Inc.
Doylestown, Pennsylvania

Major Pool Equipment Corporation
Clifton, New Jersey

Ohio Clearwater Pools, Inc. (Sales, Installation)
Columbus, Ohio

Overly Mfg. (Aluminum Plate)
Greensburg, Pennsylvania

Quality Pools (Sales, Installation)
Columbus, Ohio

Statewide Pools (Commercial Only)
Columbus, Ohio

Swimming Pools of Ohio, Inc.
Columbus, Ohio

Steel, Structural Products

Ben-Tom Companies, Inc.
Columbus, Ohio

Clayton and Lambert Mfg. Company
Buckner, Kentucky

Major Pool Equipment Company
Clifton, New Jersey

Palmer-Donavin Mfg. Company
Columbus, Ohio

Wheeling Corrugating Company
Wheeling, West Virginia

Tanks, Concrete

Babbert, E. C., Inc.
Canal Winchester, Ohio

C & B Design Systems, Ltd.
Charlotte, Michigan

Marietta Concrete Company
Marietta, Ohio

Roger Dunbar, Inc.
New Paris, Indiana

Tanks, Reinforced Plastic

Allegheny Plastics
Corropolis, Pennsylvania

Associated Fiberglass Engineers
Fort Worth, Texas

Owens-Corning Company
Toledo, Ohio

Proform, Inc.
Minneapolis, Minnesota

Resin-Fab Corporation
Belding, Michigan

Tanks, Steel

Brown-Minneapolis Tank Company
St. Paul, Minnesota

Smith, A. O. Co. - Harvestore Products
Arlington Heights, Illinois

Stanwade Metal Products, Inc. - Rad Division
Hubbard Ohio.

APPENDIX C

COST ESTIMATES FOR THE ENERGY STORAGE ASSEMBLY DESIGNS OF PHASE II

APPENDIX C

COST ESTIMATES FOR THE ENERGY STORAGE ASSEMBLY DESIGNS OF PHASE II

TABLE C-1. COST ESTIMATE OF CONCEPT ORNLFF, 4 SIZES

Reference Drawing ORNLFF-3481

Nominal rated water volume, cu.ft.	500	1000	2000	4000
Actual rated water volume, cu.ft.	520	1080	1840	3960
Cost item/reference basis				
Excavation (no haul-away)	370	390	520	600
$280 plus $1.5 per cu.yd.				
Footer	240	290	340	430
$100 plus $60 per cu.yd.				
Gravel fill, 8 inch	100	100	100	140
$8 per cu.yd., $100 min.				
Walls, Foam-Form, with reinforced concrete, waterproofed	1680	2240	2800	3920
$20 per block ($3.8 per sq.ft.)				
Added insulation, floor, roof, and walls	470	800	1210	2270
$0.11 per board ft material plus $0.16 per sq.ft. installation				
Interliner, 4-mil polyethylene	40	50	60	90
$20 plus $0.05 per sq.ft.				
Liner, PVC, 30 mil	350	460	590	880
$150 plus $0.50 per sq.ft.				
Rim coping	60	70	80	90
$40 plus $0.5 per ft.				
Building paper shield, 2 ply	40	50	70	110
$20 plus $0.12 per face sq.ft.				

TABLE C-1. (CONTINUED)

Ballast slab, 8 inch	300	460	640	1180
$100 plus $55 per cu.yd. plus $30 per cable row				
Deck				
Material, FOB				
6 Inch - $2.5 per sq.ft.	360	640	1000	
10 Inch - $3.2 per sq.ft.				2540
Delivery	$2.5X_1$	$2.5X_1$	$2.5X_1$	$5X_1$
$2.5 per load per one way mile (X_1)*, 40,000 lbs max. per load, $200 minimum				
Placement	460+	480+	500+	570+
$400 plus $2.5 per one way mile ($X_2$)*, plus $10 per section	$2.5X_2$	$2.5X_2$	$2.5X_2$	$2.5X_2$
Grouting and Hanger Placement	110	120	140	190
$100 plus $0.2 per joint ft.				
Ceiling Conduit	40	60	70	150
$20 plus $1 per foot				
Access Hatch, $30	30	30	30	30
Backfill, grade	100	120	140	160
$50 plus $1 per perimeter ft.				
Subtotal before heat exchanger	4750+	6360+	8290+	13,350+
	$2.5X_1$+	$2.5X_1$+	$2.5X_1$+	$5X_1$+
	$2.5X_2$	$2.5X_2$	$2.5X_2$	$2.5X_2$

* Where X_1 = distance of site from deck manufacturer.
X_2 = distance of site from lifting crane home base.

TABLE C-1. (CONTINUED)

Heat exchanger, 18,000 Btu per hour				
Cables, in place	110	150	150	220
$40 plus $4 each				
Tubing	160	170	190	200
$0.3 per foot				
Hangers, installed with tube	120	130	110	140
$1 each				
Elbows, installed	120	90	70	50
$1 each				
Manifolds		(None required)		
Flexible hose, 1-1/2 inch	20	20	20	20
$2 per ft.				
Restraint net, installed	100	120	140	210
$80 plus $0.1 per sq.ft.				
Methanol, $2 per gal	20	20	20	20
Subtotal	650	700	700	870
Heat exchanger, 60,000 Btu per hour				
Cables, in place	170	240	230	360
$40 plus $4 each				
Tubing	460	510	380	400
$0.3 per ft				
Hangers, installed with tube	340	390	570	610
$1 each				

TABLE C-1. (CONTINUED)

Heat exchanger, 60,000 Btu per hour (Continued)				
Elbows, installed	340	260	220	160
$1 each				
Manifolds, installed	60	60	60	60
Flexible hose, 2-1/2 inch	50	50	50	50
$5 per ft				
Restraint net, installed	100	120	140	210
$80 plus $0.1 per sq.ft.				
Methanol, $2 per gal	60	70	70	180
Subtotal	1580	1700	1640	1,930
Base cost with 18,000 Btu per hour heat exchanger	$5400	7160	8990	14,210
Travel distance additions, per mile				
To deck manufacturer	$2.50	2.50	2.50	5.00
To crane home base	$2.50	2.50	2.50	2.50
Addition for 60,000 Btu per hour heat exchanger	$ 930	1000	940	1060
Cost factor, $/rated cu.ft.	$11.4	7.1	5.2	3.8
@ 100 mile distance from deck, crane source, with 18,000 Btu per hour heat exchanger				
Cost factor, $/rated cu.ft.	$13.1	8.0	5.7	4.1
@ 100 mile distance from deck, crane source, with 60,000 Btu per hour heat exchanger				

TABLE C-2. COST ESTIMATE OF CONCEPT SWPL, 4 SIZES

Reference Drawing: SWPL-3181

Nominal rated water volume, cu.ft.	500	1000	2000	4000
Actual rated water volume, cu.ft.	510	1260	2190	3920
Cost item/reference basis				
Excavation (no haul-away)	340	370	440	580
$280 plus $1.5 per cu.yd.				
Gravel/sand fill, 8 inch	100	100	100	100
$8 per cu.yd., $100 minimum				
Anchor posts, placed	120	120	270	360
$30 each				
Floor slab, 8 inch, reinforced	170	250	320	620
$100 plus $70 per cu.yd.				
Pit shape refinement	300	340	380	420
$200 plus $2 per perimeter ft.				
Wall panels, in place	1140	1540	1860	2340
$100 plus $20 per perimeter ft.				
Wall panel support rim, reinforced	200	240	280	320
$100 plus $12 per perimeter ft.				
Backfill	50	70	90	110
$1 per perimeter ft.				
Sill, reinforced, 3 foot	360	460	540	660
$100 plus $5 per perimeter ft.				
Insulation, floor, walls, ceiling	750	1350	2180	3200
$1.50 per sq.ft. ($0.11 per board ft plus 10 percent scrap plus $0.25 per sq.ft. installation)				

TABLE C-2. (CONTINUED)

Interliner, 4-mil polyethylene	50	70	90	120
$20 plus $0.05 per sq.ft.				
Liner, PVC, 30 mil	470	680	880	1250
$200 plus $0.50 per sq.ft.				
Rim coping	60	70	80	90
$40 plus $0.5 per ft.				
Seal boot; installed	40	40	90	120
$10 each				
Deck, installed, with seal closures and hatch				
3 inch, 18 ga. @ $3.4 per sq.ft.	610			
4-1/2 inch, 18 ga. @ $3.7 per sq.ft.		1340		
6 inch, 16 ga. @ $4.5 per sq.ft.			2380	
7-1/2 inch, 12 ga. @ $7 per sq.ft.				5900
Subtotal	4760	6580	9980	16,190
Heat exchanger, 18,000 Btu per hour				
Partition channel beams	160	190	340	510
$40 each plus $3 per ft.				
Hold-down brackets, bolts	60	60	140	180
$15 each position				
Fence fabric, attached	110	150	300	500
$5 per partition per horizontal foot				
Tubing	170	170	190	200
$0.3 per foot				

TABLE C-2. (CONTINUED)

Heat exchanger, 18,000 Btu per hour (Continued)				
Elbows, installed	100	80	70	60
$1 each				
Manifolds		(None required)		
Flexible hose, 1-1/2 inch	20	20	20	20
$2 per foot				
Restraint net, installed	100	120	140	210
$80 plus $0.1 per sq.ft.				
Methanol, $2 per gal.	20	20	20	30
Subtotal	740	810	1220	1710
Heat exchanger, 60,000 Btu per hour				
Partition channel beams	160	190	340	510
$40 each plus $3 per ft.				
Hold-down brackets, bolts	60	60	140	180
$15 each position				
Fence fabric attached	110	150	300	500
$5 per partition per horizontal foot				
Tubing				
$0.3 per foot	480	510	580	630
Elbows, installed	300	240	220	180
$1 each				
Manifolds, installed	60	60	60	60
Flexible hose, 2-1/2 inch	50	50	50	50
$5 per ft.				

TABLE C-2. (CONTINUED)

Heat exchanger, 60,000 Btu per hour (Continued)				
Restraint net, installed	100	120	140	210
$80 plus $0.1 per sq.ft.				
Methanol, $2 per gal.	60	70	80	80
Subtotal	1380	1450	1910	2400
Base cost with 18,000 Btu per hour heat exchanger	$5500	7390	11,200	17,900
Addition for 60,000 Btu per hour heat exchanger	640	640	690	690
Cost factor, $ per rated cu.ft., with 18,000 Btu per hour heat exchanger	$10.8	5.9	5.1	4.6
Cost factor, $ per rated cu.ft., with 60,000 Btu per hour heat exchanger	12.0	6.4	5.4	4.7

TABLE C-3. COST ESTIMATE OF CONCEPT UTLBX, 4 SIZES

Reference Drawing: UTLBX-3981

Rated water volume, cu.ft.	500	1000	2000	4000
Cost item/reference basis				
Excavation (no haul-away)	670	810	990	1300
500 plus $1.5 per cu.yd.				
Gravel fill, 6 inch	100	100	100	120
$8 per cu.yd., $100 min.				
Insulation, installed	850	1570	3020	5040
$1.40 per sq.ft.				
Tank sections				
Modules, FOB	2460	4240	7800	15,600
End, $1230 each (includes $250 for waterproofing)				
Center, $890 each (includes $170 for waterproofing)				
Delivery	$2.5X_1$	$5.0X_1$	$7.5X_1$	$12.5X_1$
$2.5 per load per one way mile (X_1)*, 40,000 lbs max per load, $200 min.				
Sealant	50	150	350	700
$50 per joint				
Placement	700+	800+	1000+	2000+
$600 plus $2.5 per one way mile ($X_2$)* plus $50 per section	$2.5X_2$	$2.5X_2$	$2.5X_2$	$2.5X_2$
Manhole and cover	250	250	250	250

* Where X_1 = distance of site from tank section manufacturer.
X_2 = distance of site from lifting crane home base.

TABLE C-3. (CONTINUED)

Backfill and grade	300	300	400	440
$200 plus $2 per perimeter foot				
Subtotal	5380+	8250+	13,910+	24,450+
	$2.5X_1$+	$5.0X_1$+	$7.5X_1$+	$12.5X_1$+
	$2.5X_2$	$2.5X_2$	$2.5X_2$	$2.5X_2$
Heat exchanger, 18,000 Btu per hour (Note that special construction is used in 500 cu.ft. tank)				
Vertical supports, installed	--	60	120	240
$15 each				
Horizontal supports, installed	--	240	320	480
$20 each				
Prefabricated structure	350	--	--	--
Tubing	170	180	200	210
$0.3 per ft.				
Hangers, installed	--	70	80	160
$1 each				
Elbows and couplings, installed	130	70	60	60
$1 each				
Manifolds		(None Required)		
Flexible hose 1-1/2 inch	20	20	20	40
$2 per ft.				
Restraint net, installed	100	110	140	280
$80 plus $0.1 per sq.ft.				

TABLE C-3. (CONTINUED)

Methanol, $2 per gal.	20	20	20	30
Subtotal	$790	770	960	1500
Heat exchanger, 60,000 Btu per hour (Note that special construction is used in 500 cu.ft. tank)				
Vertical supports, installed	--	60	120	240
$15 each				
Horizontal supports, installed	--	400	560	800
$20 each				
Prefabricated structure	350	--	--	--
Tubing	460	520	520	620
$0.30 per ft.				
Hangers, installed	--	360	200	240
$1 each				
Elbows and couplings, installed	360	200	150	180
$1 each				
Manifolds, installed	60	60	60	80
Flexible hose	50	50	50	100
$5 per ft.				
Restraint net, installed	100	110	140	280
$80 plus $0.1 per sq.ft.				
Methanol, $2 per gal.	20	20	20	30
Subtotal	$1400	1720	1700	2570

TABLE C-3. (CONTINUED)

Base cost with 18,000 Btu per hour heat exchanger	$6170	9020	14,870	26,260
Travel distance additions, per mile				
To tank section manufacturer	$2.5	5.0	7.5	12.5
To crane home base	$2.5	2.5	2.5	2.5
Addition for 60,000 Btu per hour heat exchanger	$610	$950	$740	$1070
Cost factor, $ per rated cu.ft. @ 100 mile distance from tank, crane source, with 18,000 Btu per hour heat exchanger	$13.3	9.8	7.9	6.9
Cost factor, $ per rated cu.ft. @ 100 mile distance from tank, crane source, with 60,000 Btu per hour heat exchanger	14.6	10.7	8.3	7.2

APPENDIX D

INSTALLATION PROCEDURES FOR THE ENERGY STORAGE ASSEMBLY DESIGNS OF PHASE II

APPENDIX D

INSTALLATION PROCEDURES FOR THE ENERGY STORAGE ASSEMBLY DESIGNS OF PHASE II

Installation Procedure for Energy Storage Assembly for ACES System

Concept ORNLFF (Dwg. ORNLFF-3481)

General Considerations

(1) Consult the manufacturer's literature for general instructions particular to the use of the modular blocks. (Foam-Form Canada, Limited)

(2) Plan the basic layout arrangement to accommodate the likely route for brine supply and return lines and desired deck elevation. Earth cover is not permitted.

Procedure and Requirements

(1) Excavate to the indicated dimensions. The footer and gravel fill must rest on undisturbed earth. Earth may be used to produce the footer form, but the bottom must be flat and the corners square to obtain footer stability.

(2) Place the footer.

(a) Steel reinforcement is required, as specified.

(b) A keyway must be formed in the surface of the footer as indicated. Tie wires to engage the re-bar atop the first block course are recommended.

(c) The footer must be flat and level. Water in a clear plastic tube can be used to assure that the four corners are level to the desired accuracy.

(3) Place the gravel fill to a level flush with the footer surface.

(4) Place, reinforce, and fill the block walls.

(a) Block junctions at corners are to be properly mitered or lapped to obtain strong concrete cores.

(b) Wall courses must be straight, plumb, and level. Bracing will be required at tank corners and probably at 6-foot intervals along the walls. Consult the block manufacturer's instructions.

(c) Reinforcing steel is required along the top of each block course and vertically in each block core. Breaks are to be lapped no less than 12 inches. Breaks in the horizontal bars are not permitted within 18 inches of the corners. (Bars must therefore be bent or welded at corners.)

(d) Corrugated ties should be inserted in the top course (see drawing). Also, provision should be made at this time for brine supply and return pipe holes.

(e) Concrete shall be of 4- to 5-inch slump, with 5/8-inch aggregate (7/8-inch maximum). A carefully placed, dense pour is required (2500 psi minimum). Pumped concrete (2- or 3-inch hose) is recommended, with lateral agitation of vertical re-bars during placement. Provision should be made for placement of blocks, bracing, reinforcement, and concrete in one continuous operation. Also, concrete must not be allowed to "free-fall" for more than two block heights, to avoid damage to the blocks.

(5) Install auxiliary insulation inside the tank on the walls (5 inch thick) and on the floor (10 inch thick).

(a) Gaps between insulation panels shall not be greater than 3/16 inch wide. If greater gaps occur, they must be bridged with 24-gage galvanized steel strips, or other suitable material, held in place during liner placement by duct tape. Gaps on the gravel side of the floor insulation shall not exceed 1/2 inch.

(b) Mastic may be used to hold the vertical insulation panels against the wall blocks. (Dow Chemical Company Styrofoam Mastic #11 or equivalent).

(6) Install the Interliner and Liner.

(a) Form the rabbet necessary to receive the rim coping.

(b) Assure that the floor and walls do not contain foreign material or any projections capable of damaging the liner. Vacuuming may be necessary.

(c) Place the interliner film with overlaps as necessary for complete cover of the insulation, holding it in place temporarily with tape. (This film prevents chemical interaction of the liner and insulation).

(d) Attach the rim coping to the metal straps with self-drilling sheet metal screws.

(e) Place the liner, possibly using a vacuum cleaner to remove trapped air, and assure that the rim coping attachment is secure.

(7) Install the ballast slab.

(a) The liner is to be protected with two layers of asphalt building paper. Lay the paper with 50% overlap, shiplap fashion so that concrete flow will not disturb it. The paper must extend up the side walls. If necessary this extension can be reduced to one layer.

(b) The slab must be steel reinforced, as specified.

(c) Prepare and set the anchor cables.

(1) Consult the main drawing (sheet 1) and the heat exchanger drawing (sheet 2) to determine the number and spacings required.

(2) Eyes for cables must be formed to the required dimension and the swaged sleeve (P/L item 11) must be carefully installed with the proper tool to obtain the required strength.

(3) The specified plastic tube sleeves are for strain relief of the cable and for providing visual assurance that the anchor rod is at the required depth in the slab.

(d) A dense, flat, level slab of specified thickness is required. The re-bars used to anchor the cable eyes must be at the required depth and breaks are to be carefully positioned so that no cable eye is within 3 inches of a break.

(e) Cables must be accurately positioned and the cable tubes must be plumb. There must be contact between the cable eye and anchor rods; lift the cables against the rod for the concrete set time.

(8) Install the deck.

(a) Before proceeding, place the long and bulky materials (pipe, conduit, and insulation) into the tank. Spare materials probably should also be included.

(b) The wall concrete must be adequately cured before deck placement.

(c) Tempered hardboard strips should be laid atop the wall to relieve contact stresses. Consult the deck supplier.

(d) Place the deck sections. Note that the direction of lay is not optional and that hanger wires are to be accurately placed in deck joints directly above the cable rows, as specified (see drawing). Note also that two tank sizes require slight overhang of the beginning and end deck sections (see table on drawing).

(e) An access hatch opening is required. If the opening requires only one cut section, only temporary support of the two cut lengths will be required. (The grout key will provide permanent support, once cured.)

(f) Place stiff mortar dams at the ends of the grout slots and fill the end holes of the deck sections.

(g) Thoroughly fill the grout key slots with a 3/1 sand/cement grout mix.

(9) Erect the ceiling insulation.

(a) Position the insulation sheets against the deck with rows of thin-wall conduit, held with the previously placed wire ties.

(b) Remove unneeded insulation and scrap pieces.

(10) Progressively mount and connect the heat exchanger tube runs and the conduit and restraint nets.

(a) Install the appropriate number of oval sleeves (and perhaps spares) before attaching the cables to the overhead conduit.

(b) The wire-formed tube anchors must be firmly swaged to the cables with the tube runs and conduit in place.

(c) Install the restraint net (as specified by the drawing) as the tube runs are installed.

(d) At the end of the tube runs make connections in a pattern that provides (1) the correct number of flow branches and (2) the correct number of runs per branch. Connections are to be made by solvent welding (cementing), using good practices and materials required by this craft. (Fresh and adequate quantity of cement, cleanliness, chamfering of tube corner edges, etc.).

(e) Supply and return manifolds, if required, may be mounted to the cables or to the overhead conduit runs.

(11) Leak test the heat exchanger (only after a 2-hour minimum joint drying time).

(a) Purge the air from the tube branches by forceful water flows.

(b) Pressurize the branches at 10 psig for no less than 1 hour, with no visible leakage permitted.

(12) Connect the supply and return piping to the heat exchanger with flexible hose, so arranged that slight movements will not unduly stress the piping.

(13) A lockable access hatch cover must be provided and must be kept locked.

(14) The ice-free water level is specified on the drawing. For close tube spacings some tubes may initially be above this water level.

Installation Procedure for Energy Storage Assembly for ACES System

Concept SWPL (Dwg. SWPL-3181)

General Considerations

(1) Assure that soil conditions at the proposed site are suitable for producing a shaped pit and that the basic water table will be below the pit floor.

(2) Plan the basic layout arrangement to accommodate the likely brine supply and return route and to arrive at the desired deck elevation. Earth cover is not permitted.

Procedure and Requirements

(1) Excavate the rough shape of the pit.
   - (a) Cut-and-fill excavation is permissible but will require thorough compaction.
   - (b) The panel walls, sill, and floor slab will require sound bases, preferably undisturbed earth.

(2) Install the base slab.
   - (a) The slab is basically a rectangle, but has enlargements around the anchor post positions, which vary in number.
   - (b) A sound base with 6-inch gravel fill is to be provided.
   - (c) The anchor posts are to be accurately placed and maintained in position during concrete placement and finish (see "Anchor Layout" inset of drawing). Protect the threaded holes of post tops from damage and foreign matter.

(d) Note that re-bar rod pieces are used in each anchor post and that these must engage the concrete.

(e) The slab must be steel reinforced, as specified.

(f) The slab is to be essentially flat and level.

(3) Erect the panel walls.

(a) The earth ledge beneath the wall panels must be sound. Compact as necessary.

(b) The uppermost edge of all wall panels must be at the proper height above the concrete slab surface (H + 12") and must be level and plumb throughout. For large tanks it will be necessary to use water in a clear plastic tube to level the panels to the necessary accuracy. Vertically shim the wall panels as necessary, using brick or slate pieces.

(c) Clearances (2 inches minimum) must be provided under all lower wall panel edges and all A-frames to allow concrete to engage and support these members.

(d) Note the screw anchors required along the top edges of wall panels.

(4) Place the concrete wall panel support rim.

(a) Steel reinforcement is required, as specified.

(b) A stiff (3" max. slump) mix is to be used, which is to be driven under and into all panel wall edges and around all A-frames and stakes.

(5) Backfill

(a) Backfill is to be progressively compacted, but only after concrete has cured adequately, and not to the point of distorting or dislocating wall panels.

(b) Sand is a preferred backfill.

(6) Place and form the concrete sill plate.

(a) Tie wires may be used to hold form work against panel walls.

(b) Steel reinforcement is required, as specified. It is particularly important that re-bars be bent or welded for the four tank corners and that other breaks be lapped adequately.

(7) Finish and smooth the pit walls to the necessary shape and dimensions.

(8) Place insulating foam of walls and floor.

(a) The foam must be accurately fitted. Gaps are undesirable and must not exceed 3/16 inch on the liner side. If greater gaps are necessary they must be bridged by 24-gage galvanized steel, or other suitable material, held in place by duct tape during liner placement. Gaps on the opposite side of the floor must not exceed 1/2 inch.

(b) A hot wire is suggested as an accurate, effective means of cutting foam panels.

(c) The vertical panels can be temporarily held in place with mastic or double faced, pressure sensitive tape.

(d) Note that a rabbet is required around the top edge of the vertical panels, which must be accurately formed to suit the rim coping and provide the proper rim elevation.

(9) Install the interliner and liner.

(a) Assure that floor and walls do not contain foreign material or any projections capable of damaging the liner. Vacuuming may be necessary.

(b) Place the interliner film with overlaps as necessary for complete cover of the insulation, holding it in place temporarily with tape. (This film prevents chemical interaction of the liner and installation.)

(c) Attach the rim coping, using the specified strap and self-drilling sheet metal screws.

(d) Place the liner.

(1) A vacuum cleaner may be used to remove trapped air.

(2) When the liner is placed as accurately as possible, cut holes or slits to accept the anchor posts.

(3) Clean the anchor post and the adjacent liner surface and install the seal boots, using materials and practices recommended by the boot manufacturer. Sealant is to be inserted between the boot and anchor post. Narrow strips can be cut from the boot before assembly to provide the necessary additional material needed under the clamp (see drawing, section A-A).

(4) Assure that the liner/rim coping attachment is secure.

(10) Build the heat exchanger.

(a) It will be necessary to erect an overhead frame adjacent to the tank in order to build the heat exchanger.

(b) Assure that the channel beams (P/L Item 10) fit the anchor posts. Also pre-position the hold-down brackets (P/L Item 9) near the welded bends of each beam. Place the remaining brackets on their corresponding anchor posts, allowing for intended beam position and omitting the clip and small bolt, which are unnecessary for these positions.

(c) Attach the chain link mesh along each channel beam as specified. Note that the mesh is to be applied with the selvages vertical (whereas for fence applications the selvage would be horizontal). Individual lengths of the mesh should be carefully overlapped and securely spliced, using fencing "hog rings" or heavy tie wire (galvanized).

(d) Insert the tension bars (P/L Item 11) along the top edge, lift the partition, check the "R" dimension, and adjust as necessary.

(e) Examine the heat exchanger drawing (sheet 2) and plan for locations of any supply and return manifolds that may be necessary. These are to be mounted on the mesh partitions, and eventually connected to supply and return lines with flexible hose.

(f) At this time it may be advisable to make an inventory of the tubing to be used in the heat exchanger. An accounting of the initial length, the scrap, and the remainder can help assure that the full designed length is installed.

(g) When all partitions are complete and erected, insert lengths of tube into the mesh at appropriate intervals and spacings. Note that tubes are to be only half as far from walls as from each other. It is not important that tubes be spaced at identical intervals. It <u>is</u> important that (1) spacings be closely similar, (2) full total length be provided, and (3) the top, bottom, and side boundaries be closely approached with tubes (half the tube-to-tube spacing).

(h) At the ends of the tubing runs, make connections in a pattern that provides (1) the correct number of flow branches and (2) the correct number of runs per branch. Each branch should contain approximately the same total tube length (requiring that short tube runs be distributed among the branches). Connections are to be made by solvent welding (cementing), using good practices and materials required by this craft (fresh and adequate quantity of cement, cleanliness, chamfering of tube corner edges, etc.).

(11) Place the heat exchanger in the tank.

(a) The heat exchanger assembly will require support from the temporary overhead frame until decking is installed.

(b) The beams will need to be jockeyed into position under the previously placed brackets and a makeshift tool used to hold, place, and tighten the hold-down bolts of the main brackets. Only moderate torque need be applied.

(12) Leak test the heat exchanger (only after a 2-hour minimum joint drying time).

(a) Purge the air from the tube branches by forceful water flows.

(b) Pressurize the branches at 10 psig for no less than 1 hour, with no visible leakage permitted.

(13) Connect the supply and return piping to the heat exchanger with flexible hose, arranged so that slight movements will not unduly stress the piping.

(14) Install the ceiling insulation and metal decking.

(a) The insulation panels are to be installed generally along the direction of the tubes.

(b) The deck is installed progressively, one 12-inch section at a time, with the insulation pulled up and attached as shown, using the metal angles (P/L Item 7) and wire.

(c) At each mesh partition, J-bolts are used for support, at the specified intervals. It is not necessary or desirable to "tighten" these bolts.

(e) A lockable access hatch must be provided in the deck, approximately as shown, and this hatch must be kept locked.

(e) The perimeter of the deck must be sealed by the specified closures and caulk and must be attached to the sill. Power driven studs are recommended.

(f) Deck sections should preferably be fastened to each other along the seams. This is best accomplished by "button-punching", which keys the sections together (consult the deck supplier).

(15) Finish grade and cleanup.

(16) The ice-free water level is specified on the drawing. For close tube spacings some tubes may initially be above this water level.

Installation Procedure for Energy Storage Assembly for ACES System

Concept UTLBX (Dwg. UTLBX-3981)

General Considerations

(1) Assure that conditions at the proposed site are suitable. The basic water table must be below the pit base. Vehicle travel across the tank cannot be permitted.

(2) Plan the basic layout arrangement to accommodate the likely brine supply and return route.

(3) Coordination of supply deliveries and work teams will be required to minimize the (costly) use time of the lifting equipment needed for assembly.

Procedure and Requirements*

(1) Excavate to the indicated dimensions.
   - (a) Note that considerable space is required at tank ends for assembly.
   - (b) Undisturbed earth is preferred for the gravel base.

(2) Install a sand/gravel base and tamp to a dense, flat, level surface. Use of water in a clear tube is recommended for leveling of the larger tank sizes.

(3) Install the floor insulation.
   - (a) Gaps are undesirable and shall not exceed 1/2 inch.
   - (b) Stakes may be necessary at the perimeter to maintain position during subsequent operations.

---

* The 500 cubic foot tank consists only of two end sections and receives a free-standing heat exchanger assembly (see drawing, sheet 4); alter the procedures as necessary.

(4) Place the center tank sections.

(a) Each bell and spigot joint must be clean and primed to receive the specified joint sealant (consult manufacturer). Adequate sealant is to be used; strips should be butted tightly and not stretched in length.

(b) The tensioning rods are to be torqued before crane cable tension is relaxed on the section being assembled.

(5) End tank sections cannot be placed until the heat exchanger has been completed.

(6) Install the heat exchanger.

(a) Determine the number of full length heat exchanger "runs" and place these (and possibly spares) on the floor of the tank sections, along with the conduit to be used for the restraint nets.

(b) Mount the vertical column support members in the positions indicated by the drawing (sheet 1). The tops of the columns are to butt against the concrete steps of the tank sections.

(c) Beginning at the center of the tank, mount the uppermost horizontal support beams and attach the correct number of tube runs using the slideable plastic hanger clips (P/L item 12). If tube spacing is large and tubes can therefore be permanently positioned, special stainless steel hangers (Unistrut P/N A2613) can be substituted. (Temporary support of tube ends will be necessary during this procedure, to avoid tube damage.)

(d) Mount the next lower horizontal support and the corresponding tubes, and continue downward and outward to completion. As part of this procedure, mount the conduit specified for holding the restraint nets at the tube layers nearest the 1/3 and 2/3 depth levels.

Also tie the nets into place, at frequent intervals, beneath the tube "layer" and in a manner that will not restrict the lateral tube movements that will later be necessary.

(e) With all tube supports, tubes, and nets mounted, position the tubes laterally to the desired spacing. For long tanks this may require a special rake-like tool to reach into the tank and "comb" the tubes into position.

(f) At the ends of the tubing runs, make connections in a pattern that provides (1) the correct number of flow branches and (2) the correct number of runs per branch. Connections are to be made by solvent welding (cementing), using the good practices and materials required by this craft (fresh and adequate quantity of cement, cleanliness, chamfering of the tube corner edges, etc.).

(7) Leak test the heat exchanger (only after a 2-hour minimum joint drying time).

(a) Purge the air from the tube branches by forceful water flows.

(b) Pressurize the branches at 10 psig for no less than 1 hour, with no visible leakage permitted.

(8) Connect the supply and return piping to the heat exchanger with flexible hose, so arranged that slight movements will not unduly stress the piping.

(9) Place the end tank sections.

(a) Heat exchanger tubing must not be struck and damaged.

(b) Each bell and spigot joint must be clean and primed to receive the specified joint sealant (consult manufacturer). Adequate sealant is to be used; strips should be tightly butted and not stretched in length.

(c) Each tensioning rod is to be torqued and retorqued at least twice before crane cable tension is relaxed. The interval between torquings is not to be less than 3 minutes. Torquings are to be continued until no movement is experienced.

(d) Insert the tension rod grouting. A grout pump will be required. (Consult tension rod manufacturer.)

(10) Install the side, end, and top insulation, and the entry tube, while backfilling.

(a) Gaps between insulation panels are undesirable and must not exceed 1/2 inch.

(b) Panels are to be lapped at corners for full 10-inch insulation thickness, all around.

(c) Backfill must not displace nor seriously distort the insulation.

(d) Grading vehicles must not pass over the tank proper.

(e) Consideration must be given to any hazards posed by the tank access port and surface lid. Locking is desirable.

APPENDIX E

LISTING OF POTENTIAL SOURCES FOR MATERIALS, COMPONENTS, ASSEMBLIES AND SERVICES FOR THE ACES ENERGY STORAGE ASSEMBLY CONCEPTS OF PHASE II

APPENDIX E

LISTING OF POTENTIAL SOURCES FOR MATERIALS, COMPONENTS, ASSEMBLIES AND SERVICES FOR THE ACES ENERGY STORAGE ASSEMBLY CONCEPTS OF PHASE II

Note: The firms listed herein are presented only as typical sources of the goods and services required. No preferential endorsement or exclusion of other possibly qualified firms is implied.

General

Hose, flexible

Minor Rubber Co., Inc.
Bloomfield, New Jersey

Pacific Echo, Inc.
Torrance, California

Insulation, Polystyrene, Rigid

Gilman Brothers
Gilman, Connecticut

W. R. Grace Company
Cambridge, Massachusetts

Liners, Tank

Major Pool Equipment Corporation
Clifton, New Jersey

Staff Industries (Industrial, Commercial)
Upper Montclair, New Jersey

Net, Plastic Mesh

Fablok Mills, Inc.
Murray Hill, New Jersey

Midlakes Mfg. Co.
Knoxville, Tennessee

Pipe, Plastic

Bristolpipe, Bristol Corporation
Bristol, Indiana

Bunnell Plastics, Inc.
Mickleton, New Jersey

Charlotte Plastics
Charlotte, North Carolina

Colby Plastics
Anaheim, California

Cresline Plastic Pipe Co.
Evansville, Indiana

Harvel Plastics, Inc.
Easton, Pennsylvania

Plastic National Systems, Inc.
Seguin, Texas

Polyvinyl Piping Company
West Chester, Pennsylvania

Slocomb Plastic Pipe Co.
Georgia (205) 886-2353

ORNLFF Concept

Anchor, Wire-formed

AA Wire Products Company
Chicago, Illinois

Heckmann Building Products, Inc.
Chicago, Illinois

ORNLFF Concept (Cont'd)

Blocks, Foam-Form®

Manufacturer:

Foam-Form Canada, Limited
Scarborough, Ontario, Canada
Fort Collins, Colorado

Distributor:

Kaylor Brothers
Findlay, Ohio

Contractors:

Mr. Daniel Kern
Toledo, Ohio
(419) 531-4609

Insulated Building Systems
Port Orange, Florida
(904) 788-0760

Cable, Aircraft (and associated parts, tools)

Sava Industries, Inc.
Pompton Lakes, New Jersey

Loos and Company
Pomfret, Connecticut

Deck, Concrete (Narrow)

Price Brothers (and licensees)
Dayton, Ohio

Span-Deck Manufacturers Association
Franklin, Tennessee

Manufacturer:

Southern Cast Stone Co., Inc.
Knoxville, Tennessee

Erector:

Davis Contractors, Inc.
Knoxville, Tennessee

SWPL Concept

Deck, Roll-Formed Steel

Bowman Construction Products
Heidelberg, Pennsylvania

USS Roof Deck
Birmingham, Alabama

Wheeling Corrugating Company
Wheeling, West Virginia

Mesh, Steel, Coated

Anchor Fence, Inc.
Baltimore, Maryland

U.S. Steel Supply - Cyclone Fence
Chicago, Illinois

Seal, Boot

Staff Industries
Upper Montclair, New Jersey

Flexi-liner Corporation
Pasadena, California

Walls, Prefabricated Steel

Heldor Associates
Clifton, New Jersey

Major Pool Equipment Corporation
Clifton, New Jersey

UTLBX Concept

Concrete, Utility Vaults, Prefabricated, by location and headquarters (see also Figure 10)

Arizona, Phoenix

Utility Vault Co., Auburn, Washington
(206) 839-3500

Arkansas, Little Rock

Dalworth Quikset, Fort Worth, Texas
(817) 477-2134

California, Los Angeles

Associated Concrete Products, Santa Ana
(714) 447-7470

Brooks Products, El Monte
(213) 443-3019

Utility Vault Co., Auburn, Washington
(206) 839-3500

California, San Francisco

Utility Vault Co., Auburn, Washington
(206) 839-3500

Colorado, Denver

Amcor, Inc., Ogden, Utah
(801) 399-1171

Arco Concrete, Inc., Arvada
(303) 428-5021

Connecticut

Ditullio and Sons, Inc., Milford
(203) 878-6511

Rotundo and Sons, Avon
(203) 673-3291

Georgia, Atlanta and Dalton

Southeast Precast Concrete Products, Atlanta
(404) 938-6556

UTLBX Concept (Cont'd)

Idaho, Idaho Falls

Amcor Inc., Ogden, Utah
(801) 399-1171

Illinois, Chicago

Utility Concrete Products, Plainfield
(312) 437-7880

Indiana, Hartford City

Hartford Concrete Products, Inc., Hartford City
(317) 348-3506

Minnesota, Minneapolis

Elmore Concrete Products, Minneapolis

Missouri, Kansas City

Barbour Concrete Co., Independence
(816) 796-3344

Pennsylvania, Philadelphia

Miller Concrete Products, Philadelphia
(215) 644-9300

Penncast Corporation, Marietta
(717) 426-1911

Texas, Fort Worth, Houston, Arlington

Dalworth Quikset, Fort Worth
(817) 477-2134

Utah, Ogden

Amcor, Inc., Ogden
(801) 399-1171

Washington, Seattle

Utility Vault Co., Auburn
(206) 839-3500

* * * * * *

Major Specifier and User of Concrete Utility Vaults

Bell Laboratories, Chester, Pennsylvania
Mr. Richard Mayo
(201) 386-3000, Ext. 2074

Framing, Steel (and associated parts)

Unistrut Corporation
Wayne, Michigan

Hanger, Injection Molded Plastic

Ashland Products Company
Chicago, Illinois

Jaco Manufacturing Co.
Berea, Ohio

Product Components Corporation
Mt. Vernon, New York

Sealant, Joint

Concrete Sealant Company
New Carlisle, Ohio (Dayton).

INTERNAL DISTRIBUTION

1. L. A. Abbatiello
2. V. D. Baxter
3. N. S. Cardell
4. R. S. Carlsmith
5. W. L. Cooper, Jr.
6. R. C. DeVault
7. W. Fulkerson
8. R. Eugene Goodson, Consultant
9. W. T. Jewell
10. G. E. Kamp
11. J. O. Kolb
12. Todd R. LaPorte, Consultant
13. C. G. Lawson
14. D. W. Lee
15-19. P. M. Love
20. J. F. Martin
21. V. C. Mei
22-41. R. E. Minturn
42. W. R. Mixon
43. Larry I. Moss, Consultant
44. E. A. Nephew
45. F. S. Patton
46. R. C. Robertson
47. M. W. Rosenthal
48. K. N. Spurgeon
49. D. B. Trauger
50. L. F. Truett
51. Emergency Technology Library
52. Document Reference Section
53-55. Laboratory Records Department
56. Laboratory Records - RC
57. ORNL Patent Section
58-59. Central Research Library

EXTERNAL DISTRIBUTION

60. Roy W. Abbott, Manager, Advanced Technology, General Electric Company, Appliance Park, Bldg. 6208, Louisville, KY 40225
61. C. A. Allen, Energy Information Administration, EI-60, Federal Building, 1200 Pennsylvania Avenue, N.W., Washington, DC 20461
62. Kent Anderson, The Trane Company, 2020 14th Street, Arlington, VA 22201
63. Larry J. Barrett, Potomac Electric Power Company, Energy Management Services Division, 1900 Pennsylvania Avenue, N.W., Washington, DC 20068
64. E. K. Bastress, Energy Conversion and Utilization Technology Division, CE-143, U.S. Department of Energy, 1000 Independence Avenue, S.W., Washington, DC 20585
65. William B. Briggs, McDonnell-Douglas Company, Department E080, P.O. Box 516, St. Louis, MO 63166
66. Joe Canal, General Electric Company, Troup Highway, Tyler, TX 75711
67. Dr. David Colvin, Triangle Research and Development Corp., P.O. Box 12696, Research Triangle Park, NC 27709
68. Congressional Information Service, Research Building 83, Kodak Park, Rochester, NY 14050

69. J. J. Cuttica, Energy Conversion Equipment Branch, CE-113.2, U.S. Department of Energy, 1000 Independence Avenue, S.W., Washington, DC 20585
70. H. E. Davis, Concentration Specialists, Inc., 26 Dundee Park, Andover, MA 01810
71. David Didion, National Bureau of Standards, Washington, DC 20234
72. Warren Donnelly, Library of Congress, 10 First Street, S.E, Washington, DC 20540
73. Edward J. Doyle, Jr., Doyle Associates, 14 East Lyon Farm Drive, Greenwich, CT 06830
74. G. D. Duffy, Air Conditioning News, 700 East Maple, Birmingham, AL 48011
75. Edison Electric Institute, Library, 8th Floor, 1111 19th Street, N.W., Washington, DC 20036
76. R. J. Fiskum, Energy Conversion Equipment Branch, CE-113.2, U.S. Department of Energy, 1000 Independence Avenue, S.W., Washington, DC 20585
77. J. H. Gibbons, Office of Technology Assessment, U.S. Congress, 600 Pennsylvania Avenue, S.E., Washington, DC 20510
78. Ted Gillis, Lennox Industries, Promenade Towers, P.O. Box 400450, Dallas, TX 75240
79. Dr. L. R. Glicksman, Dept. of Mechanical Engineering, Massachusetts Institute of Technology, Cambridge, MA 02139
80. D. E. Grether, Friedrich Air Conditioning and Refrigeration, P.O. Box 1540, San Antonio, TX 78295
81. G. C. Groff, Research Division, Carrier Corporation, Syracuse, NY 13201
82. F. Hannold, Consumer Products Division, Carrier Corporation, Syracuse, NY 13201
83. R. J. Hemphill, Gas Research Institute, 8600 W. Bryn Mawr Avenue, Chicago, IL 60631
84. Larry Hobart, American Public Power Association, 2000 Virginia Avenue, N.W., Washington, DC 20037
85. Tina Hobson, Building Equipment Division, CE-113.2, U.S. Department of Energy, 1000 Independence Avenue, S.W., Washington, DC 20585
86. E. J. Horan, Exxon Research and Engineering Company, P.O. Box 8, Linden, NJ 07036
87. H. Jaster, General Electric Corporate Research and Development, General Electric Company, Schenectady, NY 13201
88. P. L. Johnson, Oak Ridge Associated Universities, Executive Office, Administrative Building, Oak Ridge, TN 37830
89. F. R. Kalhammer, Energy Management and Utilization Division, Electric Power Research Institute, 3412 Hillview Avenue, P.O. Box 10412, Palo Alto, CA 94303
90. Ted Kapus, Office of Buildings Energy Research and Development, CE-11, U.S. Department of Energy, 1000 Independence Avenue, S.W., Washington, DC 20585
91. R. W. King, Manager, Advanced Engineering, Copeland Corporation, Sydney, OH 45365

92. Dr. Edward A. Kush, Associate Scientist, Solar Research Group, Brookhaven National Laboratory, Upton, NY 11973
93. Arvo Lannus, Residential and Commercial Applications, Electric Power Research Institute, 3412 Hillview Avenue, P.O. Box 10412, Palo Alto, CA 94303
94. Jim Leggoe, Philadelphia Electric Company, 2301 Market Street, Philadelphia, PA 19101
95. G. S. Leighton, U.S. Department of Energy, CS-111, FORSTL, Washington, DC 20585
96. D. C. Lim, Energy Conversion Equipment Branch, CE-113.2, U.S. Department of Energy, 1000 Independence Avenue, S.W., Washington, DC 20585
97. Herbert Lindahl, Manager, Advanced Engineering, Bohn Aluminum and Brass Corporation, Heat Transfer Division, 1625 East Voorhees Street, Danville, IL 61832
98. Harold G. Lorsch, Manager, Energy Laboratory Engineering Dept., The Franklin Institute Research Laboratory, Twentieth and Parkway, Philadelphia, PA 19103
99. H. P. Luckett, Editor-in-Chief, Popular Science, 380 Madison Avenue, New York, NY 10017
100. Jim McCallum, Executive Editor, Air Conditioning and Refrigeration Business, 614 Superior Avenue, W., Cleveland, OH 44113
101. Jack McCormick, Research Engineer, Northern States Power Company, 414 Nicollet Mall, Minneapolis, MN 55401
102. J. P. Millhone, Office of Buildings Energy Research and Development, CE-11, U.S. Department of Energy, 1000 Independence Avenue, S.W., Washington, DC 20585
103. F. H. Morse, Office of Solar Heat Technologies, CE-31, U.S. Department of Energy, 1000 Independence Avenue, S.W., Washington, DC 20585
104. Dan Myers, Refrigeration Systems, 611 State Street, Newburg, IN 47630
105. National Energy Information Center, Library, Room 1404, 12th and Pennsylvania Avenue, N.W., Washington, DC 20461
106. Kenneth J. Nemeth, Executive Director, Southern States Energy Board, 2300 Peachford Road, One Exchange Place, Suite 1230, Atlanta, GA 30338
107. T. Ratchford, Committee on Science and Technology, Subcommittee on Energy Research and Development, House of Representatives, Washington, DC 20515
108. Bill Riley, Advanced Development, Heil Quaker Corporation, 647 Thompson Lane, P.O. Box 40566, Nashville, TN 37204
109. James K. Risher, Energy Resources Center, Honeywell, Inc., 2600 Ridgeway Parkway, Minneapolis, MN 55413
110. J. Rizzuto, New York State Energy Research and Development Authority, Agency Building No. 2, Empire State Plaza, Albany, NY 12223
111. A. H. Rosenfeld, Lawrence Berkeley Laboratory, Building 50B, Room 5246, Berkeley, CA 94720

112. J. H. Rothenburg, Utilities Systems, U.S. Department of Housing and Urban Development, 451 Seventh Street, S.W., Washington, DC 20410
113. J. D. Ryan, Energy Conversion Equipment Branch, CE-113.2, U.S. Department of Energy, 1000 Independence Avenue, S.W, Washington, DC 20585
114. L. A. Sarkes, American Gas Association, 1515 Wilson Blvd., Arlington, VA 22209
115. M. L. Savitz, Deputy Assistant Secretary for Conservation, CE-10, U.S. Department of Energy, 1000 Independence Avenue, S.W., Washington, DC 20585
116. J. L. Schulze, General Electric Company, Appliance Park, Louisville, KY 40225
117. D. E. Sherpereel, Research and Engineering Center, Whirlpool Corporation, Benton Harbor, MI 49022
118. J. A. Smith, Test and Evaluation Branch, CE-113.2, U.S. Department of Energy, 1000 Independence Avenue, S.W., Washington, DC 20585
119. M. H. Somerville, Dept. of Mechanical Engineering, University of Arkansas, Fayetteville, AR 72701
120. E. W. Spannhake, White Consolidated Industries, Inc., 11770 Berea Road, Cleveland, OH 44111
121. Steven Strong, Solar Design Associates, 271 Washington Street, Canton, MA 02021
122. Floyd Stuckey, FSA Engineering Consultants, 315 East Sixth Street, Winfield, KS 67156
123. W. D. Syniuta, Advanced Mechanical Technology, Inc., 141 California Street, Newton, MA 02158
124. C. C. Thiel, Jr., Division of Advanced Technology Applications, National Science Foundation, 1800 G Street, N.W., Washington, DC 20550
125. Robert G. Werden, Werden & Associates, Inc., P.O. Box 414, Jenkintown, PA 19046
126. Office of the Assistant Manager for Energy Research and Development, U.S. Department of Energy, Oak Ridge Operations, Oak Ridge, TN 37830

127-153. Technical Information Center, U.S. Department of Energy, P.O. Box 62, Oak Ridge, TN 37830

154-225. Energy Division Library, Oak Ridge National Laboratory, P.O. Box Y, Bldg. 9102-2, Room 218, Oak Ridge, TN 37830

☆ U.S. GOVERNMENT PRINTING OFFICE: 1981-740-062/268