ornl

OAK
RIDGE
NATIONAL
LABORATORY

UNION
CARBIDE

ORNL/Sub-7470/1-V1

ECONOMIC EVALUATION OF THE ANNUAL CYCLE ENERGY SYSTEM (ACES)

FINAL REPORT

Volume I — Executive Summary

ENERGY RESOURCES CENTER
HONEYWELL INC.
2600 RIDGWAY PARKWAY
MINNEAPOLIS, MINNESOTA 55413

OPERATED BY
UNION CARBIDE CORPORATION
FOR THE UNITED STATES
DEPARTMENT OF ENERGY

Office of Buildings and Community Systems

Printed in the United States of America. Available from
National Technical Information Service
U.S. Department of Commerce
5285 Port Royal Road, Springfield, Virginia 22161
NTIS price codes—Printed Copy: A05 Microfiche A01

This report was prepared as an account of work sponsored by an agency of the United States Government. Neither the United States Government nor any agency thereof, nor any of their employees, makes any warranty, express or implied, or assumes any legal liability or responsibility for the accuracy, completeness, or usefulness of any information, apparatus, product, or process disclosed, or represents that its use would not infringe privately owned rights. Reference herein to any specific commercial product, process, or service by trade name, trademark, manufacturer, or otherwise, does not necessarily constitute or imply its endorsement, recommendation, or favoring by the United States Government or any agency thereof. The views and opinions of authors expressed herein do not necessarily state or reflect those of the United States Government or any agency thereof.

ORNL/Sub-7470/1-V1

Contract No. W-7405-eng-26

ECONOMIC EVALUATION OF THE ANNUAL CYCLE ENERGY SYSTEM (ACES)

Final Report

Volume I — Executive Summary

Date Published: May 1980

Report Prepared by
ENERGY RESOURCES CENTER
HONEYWELL INC.
2600 Ridgway Parkway
Minneapolis, Minnesota 55413
Under Subcontract Number 7470

for

OAK RIDGE NATIONAL LABORATORY
Oak Ridge, Tennessee 37830
operated by
UNION CARBIDE CORPORATION
for the
DEPARTMENT OF ENERGY

TABLE OF CONTENTS

	PAGE
ACKNOWLEDGEMENTS	vii
PREFACE	viii
SECTION 1.0 INTRODUCTION	1-1
1.1 STATEMENT OF THE PROBLEM	1-1
1.2 PROGRAM OBJECTIVES	1-2
SECTION 2.0 ACES DESCRIPTION	2-1
2.1 OPERATION CONCEPT	2-1
2.2 SYSTEM DEFINITION	2-2
SECTION 3.0 SCOPE	3-1
SECTION 4.0 PROGRAM METHODOLOGY	4-1
SECTION 5.0 COMPUTER PROGRAM OVERVIEW	5-1
5.1 RESIDENTIAL COMPUTER PROGRAM	5-1
5.2 COMMERCIAL COMPUTER PROGRAM	5-3
5.3 ECONOMIC ANALYSIS COMPUTER PROGRAM	5-3
SECTION 6.0 RESULTS AND CONCLUSIONS	6-1
6.1 SAMPLE RESULTS--SINGLE-FAMILY RESIDENCE	6-1
6.2 RESULTS FOR THE SINGLE-FAMILY RESIDENCES	6-9
6.3 RESULTS FOR THE MULTI-FAMILY RESIDENCES	6-15
6.4 RESULTS FOR THE COMMERCIAL BUILDINGS	6-15
6.5 SUMMARY	6-21
SECTION 7.0 CONCLUSIONS	7-1
SECTION 8.0 RECOMMENDATIONS	8-1
SECTION 9.0 STUDY LIMITATIONS	9-1
APPENDIX: CONTRACT STATEMENT OF WORK	A-1

LIST OF TABLES

Table		Page
6-1	Heating, Cooling and Hot Water Load Profiles for the Philadelphia Single-Family Residence	6-2
6-2	Characteristics of the Full and Minimum ACES for the Philadelphia Single-Family Residence	6-4
6-3	General Economic Analysis Variables for the Philadelphia Single-Family Residence	6-4
6-4	Economic Input Data: HVAC Installed Costs for the Philadelphia Single-Family Residence	6-5
6-5	Time-of-Day Service Rate Schedule for the Philadelphia Single-Family Residence	6-5
6-6	Fuel Price and Escalation Rate Schedule for the Philadelphia Single-Family Residence	6-6
6-7	Comparison of Initial Capital Costs (1978 Dollars) for the ACES and Conventional Systems for the Philadelphia Single-Family Residence	6-7
6-8	Comparison of the ACES and Conventional Systems for the Philadelphia Single-Family Residence	6-8
6-9	ACES Configurations of the Single-Family Residences	6-10
6-10	Economic Characteristics of HVAC/DHW Systems for the Philadelphia Single-Family Residence	6-11
6-11	Economic Characteristics of HVAC/DHW Systems for the Atlanta Single-Family Residence	6-12
6-12	Economic Characteristics of HVAC/DHW Systems for the Minneapolis Single-Family Residence	6-13
6-13	ACES Configurations of the Multi-Family Residences	6-16
6-14	Economic Characteristics of HVAC/DHW Systems for the Minneapolis Multi-Family Residence	6-17
6-15	Economic Characteristics of HVAC/DHW Systems for the Atlanta Multi-Family Residence	6-18

LIST OF TABLES (Concluded)

Table		Page
6-16	Economic Characteristics of HVAC/DHW Systems for the Philadelphia Multi-Family Residence	6-19
6-17	Commercial Building ACES Configurations	6-20
6-18	Economic Characteristics of HVAC/DHW Systems for the Minneapolis Commercial Building	6-22
6-19	Economic Characteristics of HVAC/DHW Systems for the Atlanta Commercial Building	6-23
6-20	Economic Characteristics of HVAC/DHW Systems for the Philadelphia Commercial Building	6-24
6-21	Payback Duration of the Cost Optimized ACES/System for Each Building Type in Each Location	6-25

ACKNOWLEDGEMENTS

This contract study was made possible by the Union Carbide Corporation, Nuclear Division (USS-ND), operating Oak Ridge National Laboratory (ORNL) in support of the Department of Energy's (DOE) energy conservation program for buildings and community systems. Honeywell wishes to express its gratitude and appreciation to Dr. Robert Minturn, Mr. Leonard Abbatiello, and Mr. Edmond Nephew for their suggestions, support and guidance throughout this program

Honeywell also wishes to express its appreciation to Dr. Mason Summerville and Mr. Harry Fisher for their efforts as consultants on this project.

PREFACE

One of the roles of the Oak Ridge National Laboratory (ORNL) is to support the Department of Energy's building and community systems energy conservation program. Since space conditioning is the largest end use of energy in buildings, an important part of ORNL's role is to evaluate the technical and economic effectiveness of novel systems designed to provide space conditioning in a more efficient manner. It was in this context that ORNL sponsored the Economic Evaluation of Annual Cycle Energy System (ACES) Study (Contract 7470).

The results of this study, which was performed over a 12 month period by the Energy Resources Center of Honeywell Inc., are contained in this report. They are published in three volumes:

- Volume I: Executive Summary
- Volume II: Detailed Results
- Volume III: Appendices

Volume I provides a brief synopsis of the project and its results. Volume II provides a detailed discussion of the assumptions, methodology and results of this study. Volume III, the appendices, is a compendium of the background information and computer programs used in developing the results.

SECTION 1.0
INTRODUCTION

1.1 STATEMENT OF THE PROBLEM

Residential and commercial buildings account for approximately one-third of the total energy consumption in the United States. Over 70 percent of this energy is used for space conditioning (heating and cooling) and the production of domestic hot water. In the past, space heating and hot water needs (the two largest consumers) have been supplied by direct use of oil and natural gas. However, the prices of these fuels have increased sharply in the last six years and show no signs of leveling off in the near future. In addition, spot shortages of petroleum caused by the world political situation have raised the specter of not being able to secure the traditional fuels at any price. The only conventional energy form which remains as a substitute is electricity. However, electricity carries with it a stiff conversion penalty: only one-third of the energy input to a power plant is converted to usable electricity. Therefore, to minimize the adverse impact which this shift to electricity could have on our national energy needs, it is necessary to develop electrically driven heating, ventilating, and air conditioning (HVAC) and domestic hot water systems which use the least amount of electricity possible to perform their functions.

One of the systems proposed to meet this objective is centered around an ice-maker heat pump--an existing, energy efficiency device. The conceptual basis of the system rests on heat pump operation: a heat pump extracts heat from a source to supply heat to a load. In the proposed system, called an Annual Cycle Energy System (ACES), the ice formed as a by-product of operating a water source heat pump to provide space and hot water heating is stored and then used in the summer to provide almost electricity-free cooling.

Previous work indicates that the ACES is a technically feasible means of reducing building energy consumption. However, the economic feasibility of the

system (the question of how well its economic performance compares with that of conventional systems) has yet to be established. Since the economically rational consumer will purchase an ACES only if it will save money when compared to conventional HVAC systems, widespread use of ACES will depend on demonstration of its economic desirability. Therefore, an investigation of the relationship between the energy consumption and the economic performance of the ACES is imperative. It is just such an endeavor that this study has undertaken.

1.2 PROGRAM OBJECTIVES

The objectives of this program, entitled The Economic Evaluation of the ACES, are:

- To assess the economic viability of the ACES: i.e., to determine its competitiveness with other more conventional heating and cooling systems.
- To assess the energy effectiveness of the ACES; i.e., to compare the seasonal coefficient of performance (COP) of the ACES with other more conventional heating and cooling systems.

SECTION 2.0

ACES DESCRIPTION

2.1 OPERATION CONCEPT

At its most basic level, the Annual Cycle Energy System (ACES) concept consists of extracting heat from a storage tank by a unidirectional heat pump. As the heat is extracted during the heating season, or at other times to provide domestic hot water, ice is formed within the tank. This ice is then used for air conditioning during the summer. Thus the water's heat of fusion is available as a heat source in the winter and a heat sink in the summer. It is this interseasonal transfer of energy that allows both the heating and cooling outputs of the heat pump to be used to satisfy building loads. The result of this unique feature of the ACES is that the annual coefficient of performance (COP) may be considerably higher than that of a conventional system.

In northern areas of the United States, where heating loads predominate, storage of all of the ice produced during the heating season would result in excess ice at the end of the summer, which would have to be removed. In these areas, it is desirable to store only the volume of ice needed for summer cooling. To prevent the accumulation of excess ice during the heating season, a collector/convector panel will be used to supply solar and convective energy as needed and as available to melt ice.

In climates where cooling loads predominate, the ACES configuration utilizes a bin sized to store all of the ice generated during the heating season. This amount of ice will not be sufficient to meet all summer cooling needs. Therefore, after the stored ice has been depleted, the ACES heat pump is operated at night to generate ice to meet the cooling requirements of the next 24-hour period. The heat extracted from the water by heat pump operation is rejected to the environment by means of an air-cooled fan coil. The advantages of nighttime operation of the compressor are that the dissipation of waste heat is more efficient at lower nighttime temperatures and that off-peak electric power rates may be utilized in those areas where they are in effect.

For capital cost or space limitation reasons, it may not be feasible to provide a bin large enough to store energy for an annual cycle. In such cases, a smaller bin is provided and greater dependence is placed on solar assist in winter and nighttime compressor operation for cooling in the summer.

Another option available for reducing initial capital costs is to incorporate a dual source heat pump into the ACES design. With the dual source system, energy can be extracted not only from the ice storage bin, but also from the ambient air. The optimum choice of when to use the air source evaporator or water source evaporator will result in the selection of the mode that yields the most cost-effective system operation.

Although the goal of the ACES is to maximize interseasonal energy transfer, and hence energy savings, it also offers unique potential for load management. Because of its configuration and storage capability, the ACES is ideally suited to take advantage of off-peak rates, time-of-day pricing, and other rate structures proposed by utilities for effective load management.

2.2 SYSTEM DEFINITION

For the purpose of this study, three ACES configurations are defined. Each incorporates an electrically driven unidirectional heat pump and a water-ice storage tank. The ice-maker plates of the heat pump are located above the ice storage tank, and flake or sheet ice upon harvest will fall by gravity into the storage bin.

The ACES configurations analyzed in this study are defined as follows:

- Full ACES--This configuration provides the heating, cooling, and domestic hot water demands of the building while minimizing total energy consumption. The water-ice storage volume is selected to maximize interseasonal energy transfer. The Full ACES utilizes an

electrically driven unidirectional heat pump, a water source evaporator (ice-maker), water-ice storage tank, provision for producing and storing hot water, and solar panels and outdoor air coils as needed.

- Minimum ACES--This configuration satisfies the heating, cooling, and domestic hot water demands of the building under the restriction of minimum water-ice storage capability, which is defined as storage sufficient to provide heating for 12 consecutive sunless days during the coldest month. The components of the system are the same as for the Full ACES.

- Cost-Optimized ACES--This configuration provides heating, cooling, and domestic hot water for the building at minimum total cost over the life of the system. It may contain all of the components of the Full ACES and may, in addition, incorporate an air source evaporator that is automatically used when it is more cost-effective for the system to operate as an air-to-air heat pump than as a water-to-air heat pump. The use of stored sensible heat as well as heat of fusion is considered to be an option for reducing life cycle costs.

The ACES concept involves the interseasonal transfer of energy. This concept is arbitrarily defined to include all ACES designs ranging from the Full ACES to the Minimum ACES. Since no constraints are imposed on the search for the Cost Optimized ACES, it is possible to find a configuration of components that no longer exhibits interseasonal energy transfer. Should this situation exist, the resulting system cannot be classified as an ACES according to the above

definition. Therefore, the following designation is made throughout this report: the Cost Optimized configuration of components that meets the requirements of minimum interseasonal energy transfer is termed a Cost Optimized ACES. The Cost Optimized configuration of components that does not meet the requirements of minimum interseasonal energy transfer is termed a cost optimized system.*

---

*Bin volumes smaller than those of the Minimum ACES are not investigated in the search for the cost optimized configuration of components. The reason that these volumes are not investigated is that by definition they cannot meet the minimum requirements of interseasonal energy transfer.

SECTION 3.0
SCOPE

The objective of this study is to determine the energy effectiveness and the economic viability of the ACES concept. To perform this task proficiently, the ACES must be studied in a variety of different applications and compared to a number of conventional systems. The different applications can be categorized in two groups: the class of building into which the ACES is incorporated, and the climatic region in which the ACES is located. To cover a reasonable range of possible applications, three different classes of building are investigated. They include:

- Single-Family Residence
- Multi-Family Residence
- Commercial Office Building

The application of ACES to each of these building types is studied in three different climatic regions. These regions were chosen to represent the major climatic conditions that would be encountered in the continental United States. The locations include:

- Minneapolis, Minnesota
- Atlanta, Georgia
- Philadelphia, Pennsylvania

For each building type in each geographic location, the economic evaluation of the ACES is based on a comparison of the present worth of the ACES to the present worth of a number of conventional systems. The conventional systems chosen represent four major systems that are currently in extensive use. They include:

- Electric resistance heating, electric air conditioning, and electric domestic water heating.
- Air-to-air heat pump and electric domestic water heating.
- Oil-fired furnace, electric air conditioning, and electric domestic water heating.
- Gas-fired furnace, electric air conditioning, and gas domestic water heating.

Both the single-family and multi-family residential ACES are compared with all four conventional systems in the three geographic regions.

Due to the extremely small number of commercial air-to-air heat pump systems now in operation, the air-to-air heat pump is not included in the list of conventional commercial systems. Therefore, the commercial ACES is compared with the three remaining conventional systems in the three geographic areas.

SECTION 4.0
PROGRAM METHODOLOGY

The overall methodology employed in the Economic Evaluation of ACES is illustrated in Figure 4-1. The methodology can be divided into three steps. The first step is to develop a data base containing the structural and operational characteristics of the study buildings, component operating charactertistics and/or costs (for both ACES and conventional systems), energy costs (including time-of-day rate schedules for electricity), energy price escalation scenarios, general economic parameters and typical year weather.

The second step is to synthesize or develop the necessary analysis packages. For each building type, a computer program was developed that would:

- Calculate the time-dependent dynamic heating, cooling and domestic hot water loads.
- Size the ACES components for the Full and Minimum ACES.
- Determine the annual energy consumption by simulating the interactions between the building, the weather and the HVAC/hot water system.
- Evaluate the economic effectiveness of the various systems in terms of life cycle costs.

The final step is to use the programs to define and evaluate the various system/building/geographic location combinations. At each location a determination was first made as to the type of solar panel (absorber, single-glazed, or double-glazed) that resulted in lowest system life cycle costs. The identified types were then used for the ACES evaluation at that location. Once the life cycle costs for the Full and Minimum ACES were determined, the configuration and life cycle cost of the cost optimized ACES were determined by parameter variation. Four parameters were varied independently:

Figure 4-1. ACES STUDY METHODOLOGY

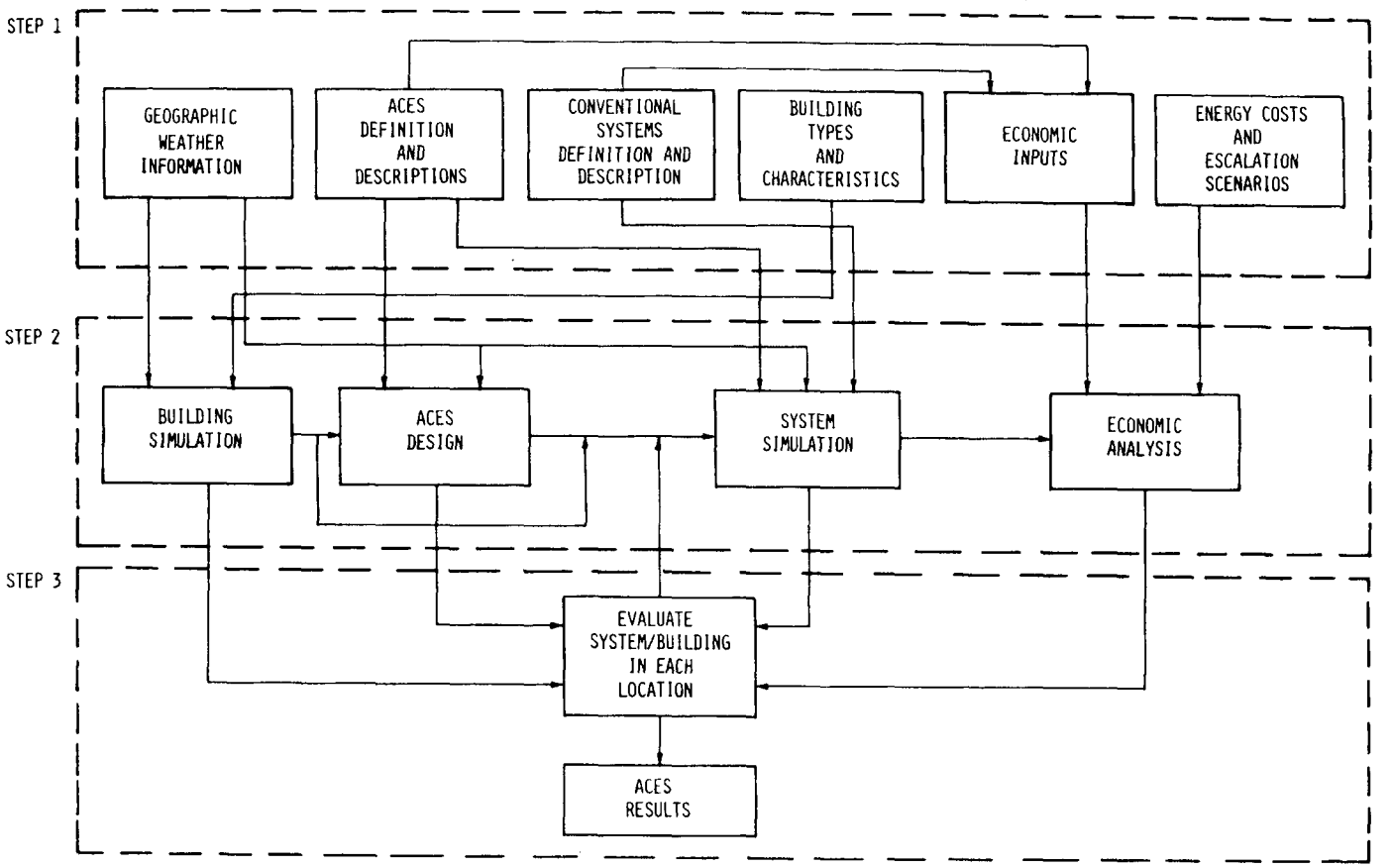

- Ice tank size
- Collector area
- Changeover temperature
- Tank Insulation

If the Cost Optimized ACES employed a water source heat pump, no changeover temperature was used. If a dual source heat pump was used, the changeover temperature marked the point at which the heat pump ceased using ambient air as a heat source and switched to using the water in the ice tank as a heat source.

SECTION 5.0
COMPUTER PROGRAM OVERVIEW

5.1 RESIDENTIAL COMPUTER PROGRAM

Figure 5-1 illustrates the executive flow of the computer program used to simulate and evaluate residential ACES and conventional heating and cooling systems. This computer program, ACESIM, is comprised of four distinct modules. The modules are:

- Loads Module (LODMOD)
- Design Module (DESMOD)
- Simulation Module (SIMMOD)
- Economic Module (ECOMOD)

The first module is used to calculate the time dependent thermal loads imposed by the user-specified structure. If these loads are already known or have been previously determined, the loads module can be bypassed.

The second module reads the required load information from a permanent record file or directly from the loads module and then determines the sizes of the various ACES components. If the ACES components have already been correctly sized or if the user wishes to evaluate "off-sized" components, this phase can be bypassed.

The third module reads information generated by the first two modules and then simulates either one of the ACES systems or one of the four conventional systems. The output of this phase is the time dependent history of all gas, oil, and electric consumption of the system being simulated.

The final module reads the energy use history of the system being simulated and all capital costs associated with equipment, as well as projected escalation rates, discount rates, and time dependent utility rates. The final outputs of the program are: 1) the present worth of all cash outlays for the system dis-

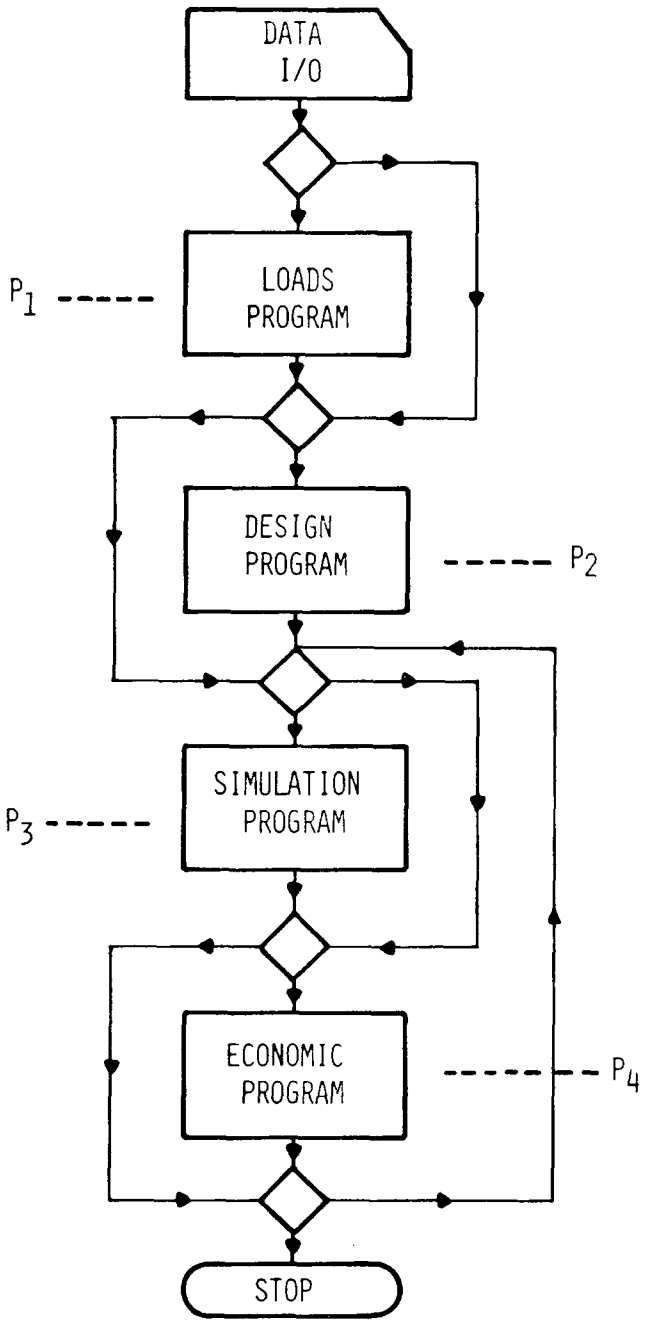

Figure 5-1 ACESIM Executive P-Level Routine

counted over an appropriate system lifetime and 2) the payback of incremental ACES cost compared to the conventional systems.

Included in the dynamic model are the directional heat flows through walls, roofs, ceilings, basement, internal partitions, tank and surrounding ground as well as the time dependent boundary conditions that include direct and diffuse radiation impingement on any surface. The equations defining heat flow are coupled to one another and to the global energy equations defining system response.

5.2 COMMERCIAL COMPUTER PROGRAM

The computer program used to simulate and evaluate commercial ACES and conventional heating and cooling systems, CACESS, is also comprised of four modules. These modules provide the same functions as the four modules described in Section 5.1. The loads program for the commercial building is the only program that is functionally different from those modules. In the commercial application, the final loads are generated by using two distinct programs. The first program, NBSLD (National Bureau of Standards load determination program), is used to determine the individual multi-zone thermal loads. These loads are then input to the second program to determine the total system loads. The total system loads are calculated for a Variable Air Volume (VAV) central distribution system that incorporates an enthalpy controlled outdoor air economizer.

5.3 ECONOMIC ANALYSIS COMPUTER PROGRAM

The economic analysis program developed for this study utilizes a comprehensive life cycle cost model. The model outputs two measures of economic effectiveness for each of the heating, ventilating and air conditioning systems evaluated. These economic measures are total annualized cost and payback of incremental costs. The measures are used to determine the economic

effectiveness of the Full and Minimum ACES and to define the equipment configuration that will result in the Cost Optimized ACES. The costs included in this analysis were:

- Investment
- Operating (costs for fuels, etc.)
- Maintenance and repair
- Insurance
- Property tax
- Interest
- Operating expense deductions
- Salvage value
- Energy tax credit

The period of analysis was taken to be twenty years.

SECTION 6.0
RESULTS AND CONCLUSIONS

The results of the Economic Evaluation of ACES are summarized in three parts, one for each building type analyzed:

- Single-Family Residence
- Multi-Family Residence
- Commercial Building

The following areas are reviewed for each building type:

- ACES component configurations
- Annual energy use of ACES and conventional systems
- Economic characteristics of ACES and conventional systems

All results are presented in terms of two possible ACES equipment cost scenarios: today's cost of prototype systems (1978) and system costs resulting from extensive commercialization (1982). Before these results are presented, a detailed example of the methodology used in evaluating the single-family residence will be given to provide a clear understanding of the evaluation process.

6.1 SAMPLE RESULTS--SINGLE-FAMILY RESIDENCE

To illustrate the analysis procedure as well as the required inputs a sample of the system evaluation methodology is presented. The sample given is for the Philadelphia single-family residence.

The evaluation of the ACES begins with the determination of the building's thermal loads. Table 6-1 gives the heating, cooling and hot water load profiles generated by the computer loads program, LODMOD, for the Philadelphia single-family residence. The residence is described in Volume III, Appendix E.

Table 6-1. Heating, Cooling and Hot Water Load Profiles for the Philadelphia Single-Family Residence

	HEATING (BTU X 10^{-5})	COOLING (BTU X 10^{-5})	HOT WATER (BTU X 10^{-5})
JANUARY	128	0	20
FEBRUARY	88	0	18
MARCH	76	0	20
APRIL	37	1	19
MAY	9	6	18
JUNE	1	33	16
JULY	0	46	14
AUGUST	0	29	15
SEPTEMBER	3	16	15
OCTOBER	25	0	16
NOVEMBER	50	0	17
DECEMBER	85	0	19
TOTAL	502	131	207

The computer program is described in Volume II, Section 2.0. The outputs of the first module, the time dependent (hourly) load profiles, are input into the second module.

The second program is the computer design module, DESMOD. This program is described in Volume II, Section 2.0. Depending upon the input selection criteria, the outputs of DESMOD will be the component sizes of the Full or Minimum ACES. The third computer program, the simulation module SIMMOD, which is also described in Volume II, Section 2.0, has for its major inputs the time dependent load profiles, the type of system to be simulated (ACES or any one of the four conventional systems), and if it is an ACES, the component sizes. A description of the operation and efficiencies of the component models used in this program are given in Volume II, Section 2.0. The outputs of the program are the time dependent energy consumption profile and the total energy consumption of the system being simulated. This program is struc-

tured to simulate the conventional systems, or if the outputs of DESMOD are used, the Full or Minimum ACES. It also has the capability of simulating ACES from user-defined inputs, which is the option used in determining the Cost Optimized ACES. The results of DESMOD and SIMMOD are given in Table 6-2 for the Philadelphia single-family Full and Minimum ACES. Information generated in the first three modules is input into ECOMOD for the economic evaluation. ECOMOD is described in Volume II Section 4.0. In addition to the information generated in the first three modules, other economic constraints are input into ECOMOD. Table 6-3 gives the values of the general economic variables used for the single-family residence in Philadelphia. Table 6-4 lists the unit component costs of the ACES and four conventional systems. The final information needed to evaluate the ACES and conventional systems can be found in Tables 6-5 and 6-6. These tables contain the time-of-day rate structures, base prices, and escalation rates applied to gas, oil, and electricity. With this information the conventional systems and the Full and Minimum ACES can be evaluated and the Cost Optimized ACES can be determined by performing a parametric search.

The results of this search for the Philadelphia single-family residence are summarized below:

SYSTEM CONFIGURATION / COST OPTIMIZED ACES*	TANK INSULATION	TANK SIZE (FT^3)	COLLECTOR AREA (FT^2)	HEAT PUMP TYPE	CHANGEOVER TEMPERATURE	SUPPLEMENTAL HEAT
1978 INSTALLATION	R40	1152	0	DUAL SOURCE	20°F	NONE
1982 INSTALLATION	R40	2312	0	DUAL SOURCE	30°F	NONE

*1978 Configuration does not classify as an ACES.

Table 6-7 shows the component costs of the various systems. This table illustrates the significant differences between costs for the ACES and conventional systems. Finally, Table 6-8 gives the detailed results of ECOMOD for the Philadelphia single-family residence.

Table 6-2. Characteristics of the Full and Minimum ACES for the Philadelphia Single-Family Residence

CHARACTERISTIC \ SYSTEM	FULL ACES	MINIMUM ACES
TANK INSULATION	R40	R40
TANK SIZE (FT^3)	3872	1152
COLLECTOR (FT^2)	90	252
COLLECTOR TYPE	ABSORBER	ABSORBER
HEAT PUMP TYPE	WATER SOURCE	WATER SOURCE
CHANGEOVER TEMPERATURE	NONE	NONE
ENERGY CONSUMPTION (BTU X 10^{-6})	24.55	27.17
COP	3.43	3.10

Table 6-3. General Economic Analysis Variables for the Philadelphia Single-Family Residence

VARIABLE	VALUE
LENGTH OF ANALYSIS PERIOD	20 YEARS
REAL DISCOUNT RATE	2.5%
INFLATION RATE	6.0%
INCOME TAX RATE	30.0%
INTEREST RATE ON BORROWED MONEY	9.5%
PERCENT DOWN PAYMENT	10.0%
NUMBER OF LOAN REPAYMENTS PER YEAR	12
ENERGY CONSERVATION TAX CREDITS	10.0%
PROPERTY TAX RATE	2.47%
DEPRECIATION SCHEDULE	NONE
MAINTENANCE AND REPAIR	1.0%
INSURANCE	0.4%

Table 6-4. Economic Input Data: HVAC Installed Costs for the Philadelphia Single-Family Residence

COMPONENT	COST (DOLLARS)
HEATING PLANT	
NATURAL GAS	660
OIL	850
ELECTRIC	690
CENTRAL AIR CONDITIONER	850
HOT WATER HEATER	
NATURAL GAS	182
ELECTRIC	170
HIGH EFFICIENCY AIR-AIR HEAT PUMP	2606
ICE-MAKER HEAT PUMP	
DUAL SOURCE	4472
WATER SOURCE	4047
SOLAR COSTS - FIXED + VARIABLE	1580 + 19.65/FT^2 (9.50/FT^2)*
NONSOLAR FIXED COSTS	563
ACES CONTROLS	1150
SUPPLEMENTAL ELECTRIC HEAT	300
ICE TANK	.24/FT^2 FOR LINER, 4.08/FT^2 FOR WALLS
	2.22/FT^2 FOR SLAB, 3.41/FT^2 FOR COVER
	5.63/FT FOR FTG. WHERE NEEDED
	.54/FT^2 FOR INSULATION

* Price for absorber with 10-year life

NOTE: Ducting common to ACES and conventional system has not been included in costs.

Table 6-5. Time-of-Day Service Rate Schedule* for the Philadelphia Single-Family Residence

	OCT. - MAY	JUNE - SEPT.
CUSTOMER CHARGE PER MONTH	$14.00	$14.00
ON-PEAK ENERGY CHARGE ($/KWH)	0.055	0.134
OFF-PEAK ENERGY CHARGE ($/KWH)	0.028	0.028
ON-PEAK HOURS	8:00 AM - 10:00 PM Monday - Friday	8:00 AM - 10:00 PM Monday - Friday

*These are the experimental rates now available from Consolidated Edison Electric Company.

Table 6-6. Fuel Price and Escalation Rate Schedule for the Philadelphia Single-Family Residence

	GAS	OIL	ELECTRICITY
BASE PRICE	$3.22/MCF	48.1¢/GAL	SEE TOD** RATES
PERIOD 1			
DURATION*	7	7	7
RATE+	4.361	3.022	1.136
PERIOD 2			
DURATION	8	17	17
RATE	2.444	.768	.152
PERIOD 3			
DURATION	2	-	-
RATE	1.647	-	-
PERIOD 4			
DURATION	7	-	-
RATE	.768	-	-

\+ Escalation rate in percent per year
* Number of years that rate applies
** Time-Of-Day

SOURCE: Historic and Forecasted Energy Prices by DOE Region and Fuel Type for Three Macroeconomic Scenarios and One Imported Oil Price Escalation Scenario (AM/EU/79-06) published by the Energy Information Administration, November 1978.

Table 6-7. Comparison of Initial Capital Costs (1978 Dollars for the ACES and Conventional Systems for the Philadelphia Single-Family Residence

COMPONENT \ SYSTEM	FULL ACES	MINIMUM ACES	COST OPTIMIZED SYSTEM	GAS	OIL	ELECTRIC	HEAT PUMP
HEATING PLANT[1]	4047	4047	4472	660	850	690	2606
COOLING PLANT[1]	-	-	-	850	850	850	-
HOT WATER HEATER	-	-	-	182	170	170	170
SOLAR COSTS	3666	6401	-	-	-	-	-
ACES CONTROLS	1150	1150	1150	-	-	-	-
TANK	7036	3024	3024	-	-	-	-
TOTAL	15899	14622	8646	1692	1870	1710	2776

1 Conventional system costs include associated controls

Table 6-8. Comparison of the ACES and Conventional Systems for the Philadelphia Single-Family Residence

Table 6-8a. Energy Comparisons of the ACES and Conventional Systems (BTU X 10^{-6})

SYSTEM / CONSUMPTION/COP	GAS	OIL	HEAT PUMP	ELECTRIC	FULL ACES	MINIMUM ACES	COST OPTIMIZED ACES*	
							1978	1982
ELECTRIC CONSUMPTION	8.25	29.10	50.18	77.34	24.55	27.17	32.29	28.72
FOSSIL CONSUMPTION	105.48	68.13	0.0	0.0	0.0	0.0	0.0	0.0
TOTAL CONSUMPTION	113.73	97.23	50.18	77.34	24.55	27.17	32.29	28.72
COP	.74	.87	1.68	1.09	3.43	3.10	2.61	2.93

Table 6-8b. Cost Comparisons of the ACES and Conventional Systems (Dollars)

COST / SYSTEM	INITIAL COSTS		ANNUALIZED COSTS			
			TOTAL		ENERGY	
	1978	1982	1978	1982	1978	1982
GAS SYSTEM	1692	1672	1017	970	883	848
OIL SYSTEM	1870	1870	1226	1136	1077	1002
HEAT PUMP	2676	2676	1253	1156	1033	951
ELECTRIC	1710	1710	1485	1366	1356	1243
FULL ACES	15899	7631	1700	1029	530	488
MINIMUM ACES	14622	7018	1668	1042	560	516
COST OPTIMIZED ACES*	8646	5032	1250	895	623	533

*COST OPTIMIZED CONFIGURATION IN 1978 DOES NOT CLASSIFY AS AN ACES.

TABLE 6-8c. Breakeven* and Payback of Mature ACES (1982) with Respect to the Four Conventional Systems (Years)

CONVENTIONAL SYSTEM / ACES	ELECTRIC	HEAT PUMP	OIL	GAS
FULL ACES	3/10	8/14	11/16	-
MINIMUM ACES	3/10	9/15	12/16	-
COST OPTIMIZED ACES	1/ 6	1/ 7	2/ 9	12/16

*The definition of breakeven and payback as used in this report can be found in Section 6.5.

Major economic inputs, analysis procedures and results are presented and discussed in detail in Volume II, Section 5.0. The results contained in Volume II, Section 5.0, have been condensed and are presented here in the form of summary tables.

6.2 RESULTS FOR THE SINGLE-FAMILY RESIDENCES

Table 6-9 contains a description of the Full, Minimum, and Cost Optimized ACES/system for the three selected climatic regions. Examination of this table yields the following conclusions:

- The optimum level of tank insulation is dependent on the interaction of climatic extremes and the relative magnitude of the heating and cooling loads. Heat in-leakage to the ice tank can be significant.

- The type of solar collector used is a function of the climatic location.

- It is more cost-effective to use the air coil and produce less ice than to use the solar collector and melt off excess ice.

- Dual source heat pumps are used in all locations in the Cost Optimized ACES/system.

Tables 6-10 through 6-12 show the economic characteristics of the various ACES configurations in the three climatic locations. Important results to note here are:

- The Cost Optimized ACES are economically superior to both the Full and Minimum configurations.

- The Full ACES are the most energy efficient of all the systems analyzed because they maximize interseasonal energy transfer.

Table 6-9. ACES Configurations of the Single-Family Residences

SYSTEM TYPE AND LOCATION	SYSTEM CHARACTERISTICS						
	TANK INSULATION	TANK SIZE (FT^3)	COLLECTOR AREA (FT^2)	COLLECTOR TYPE	HEAT PUMP TYPE	CHANGEOVER TEMPERATURE(^oF)	ELECTRIC BACKUP
MINNEAPOLIS							
FULL	YES	2592	504	SG	WS	NONE	NONE
MINIMUM	YES	1800	558	SG	WS	NONE	NONE
COST OPTIMIZED							
- 1978 INSTALLATION	NO	2048	0	NONE	DS	15	YES
- 1982 INSTALLATION	NO	2048	0	NONE	DS	15	YES
ATLANTA							
FULL	YES	5000	0	NONE	WS	NONE	NONE
MINIMUM	YES	648	54	ABS	WS	NONE	NONE
COST OPTIMIZED							
- 1978 INSTALLATION	YES	648	0	NONE	DS	30	NONE
- 1982 INSTALLATION	YES	2312	0	NONE	DS	40	NONE
PHILADELPHIA							
FULL	YES	3872	90	ABS	WS	NONE	NONE
MINIMUM	YES	1152	252	ABS	WS	NONE	NONE
COST OPTIMIZED*							
- 1978 INSTALLATION	YES	1152	0	NONE	DS	20	NONE
- 1982 INSTALLATION	YES	2312	0	NONE	DS	30	NONE

NOTE: SG = SINGLE GLAZE, DG = DOUBLE GLAZE, ABS = ABSORBER, WS = WATER SOURCE, DS = DUAL SOURCE

* 1978 CONFIGURATION DOES NOT CLASSIFY AS AN ACES.

Table 6.10. Economic Characteristics of HVAC/DHW Systems for the Philadelphia Single-Family Residence

HVAC SYSTEM (HEATING PLANT/ COOLING PLANT)	INITIAL EQUIPMENT COST (DOLLARS)		ANNUALIZED COSTS (DOLLARS)				YEARLY ENERGY USE (BTU X 10^{-6})		COP
			TOTAL		ENERGY				
	1978	1982	1978	1982	1978	1982	ELECTRIC	FOSSIL	
NATURAL GAS/ELECTRIC [1]	1692	1692	1017	970	883	848	8.25	105.48	.74
OIL/ELECTRIC [2]	1870	1870	1226	1136	1077	1002	29.10	65.13	.87
AIR-TO-AIR HEAT PUMP [2]	2776	2776	1253	1156	1633	951	50.18	0.0	1.68
ELECTRIC/ELECTRIC [2]	1710	1710	1485	1366	1356	1243	77.34	0.0	1.09
FULL ACES [3]	15899	7631	1700	1029	530	488	24.55	0.0	3.43
MINIMUM ACES [3]	14622	7018	1668	1042	560	516	27.17	0.0	3.10
COST OPTIMIZED ACES [3]*	8646	5032	1250	895	623	533	32.29/28.72	0.0	2.61/2.93

NOTES
1. Natural gas fired domestic hot water heater
2. Electric domestic hot water heater
3. Desuperheater domestic hot water heater

*Cost optimized configuration in 1978 does not classify as an ACES.

Table 6-11. Economic Characteristics of HVAC/DHW Systems for the Atlanta Single-Family Residence

HVAC SYSTEM (HEATING PLANT/ COOLING PLANT)	INITIAL EQUIPMENT COST (DOLLARS)		ANNUALIZED COSTS (DOLLARS)				YEARLY ENERGY USE (BTU X 10^{-6})		COP
			TOTAL		ENERGY				
	1978	1982	1978	1982	1978	1982	ELECTRIC	FOSSIL	
NATURAL GAS/ELECTRIC[1]	1692	1692	732	705	597	583	13.53	60.30	.91
OIL/ELECTRIC[2]	1870	1870	844	780	695	646	30.95	32.23	1.06
AIR-TO-AIR HEAT PUMP[2]	2860	2860	882	809	654	602	39.90	0.0	1.69
ELECTRIC/ELECTRIC[2]	1710	1710	937	861	800	737	53.72	0.0	1.25
FULL ACES[3]	13200	6346	1262	727	310	285	19.27	0.0	3.50
MINIMUM ACES[3]	10357	4969	1183	738	406	374	27.57	0.0	2.44
COST OPTIMIZED ACES[3]	7686	4754	1000	698	415	355	28.77/25.75	0.0	2.34/2.62

NOTES
1. Natural gas fired domestic hot water heater
2. Electric domestic hot water heater
3. Desuperheater domestic hot water heater

Table 6-12. Economic Characteristics of HVAC/DHW Systems for the Minneapolis Single-Family Residence

HVAC SYSTEM (HEATING PLANT/ COOLING PLANT)	INITIAL EQUIPMENT COST (DOLLARS)		ANNUALIZED COST (DOLLARS)				YEARLY ENERGY USE (BTU X 10^{-6})		COP
			TOTAL		ENERGY				
	1978	1982	1978	1982	1978	1982	ELECTRIC	FOSSIL	
NATURAL GAS/ELECTRIC[1]	2122	2122	907	887	720	718	7.81	156.65	0.70
OIL/ELECTRIC[2]	2020	2020	1084	1011	906	847	29.69	112.19	0.81
AIR-TO-AIR HEAT PUMP[2]	3606	3606	1233	1134	915	847	75.19	0.0	1.53
ELECTRIC/ELECTRIC[2]	2130	2130	1453	1341	1266	1171	109.12	0.0	1.05
FULL ACES[3]	22520	10813	2372	1330	462	427	36.00	0.0	3.20
MINIMUM ACES[3]	22800	10944	2408	1353	466	431	36.78	0.0	3.13
COST OPTIMIZED ACES[3]	10097	4846	1416	923	566	524	47.39	0.0	2.43

NOTES
1. Natural gas fired domestic hot water heater
2. Electric domestic hot water heater
3. Desuperheater domestic hot water heater

- The ACES can be three to four times more energy efficient than the conventional systems.
- When compared to the Cost Optimized ACES, the maximized interseasonal energy savings of the Full ACES do not economically justify the required storage capital costs.
- Under current equipment cost constraints, the residential ACES are not in general cost-competitive with conventional systems.
- Using the reduced price scenario, the residential ACES are economically superior to conventional systems (oil, heat pump, electric and sometimes gas).
- Reduction in the ACES investment costs results in a more energy efficient Cost Optimized ACES/system.
- The energy saving capability of the ACES with seasonal COP as high as 3.69 are extremely favorable (this is not an upper limit of the ACES COP; it is merely the highest value found in this study).
- Cost savings in the residential sector could be greatly enhanced by utilizing a high side storage system (hot tank). This configuration would significantly reduce on-peak utilization during the heating mode.

One final observation should be made regarding the application of ACES in residential buildings. ACES are much more energy efficient than the current systems that use electricity to provide space heating and cooling and domestic hot water. Thus, the ACES has a large potential to significantly reduce the national consumption of source energy if electricity is considered to be the fuel of the future.

6.3 RESULTS FOR THE MULTI-FAMILY RESIDENCES

Table 6-13 presents the system configuration characteristics for the Full, Minimum and Cost Optimized ACES. Once again the tank insulation is dependent on geographic location. In Minneapolis, where the heating load far exceeds the cooling load, the heat in-leakage to the ice tank provides free ice melting. The type of solar collector that should be used is again dependent on the geographic location. However, solar energy is still not a cost-effective method of getting rid of excess ice. In cases where the loads are not balanced, the most cost-effective method of getting rid of excess ice is simply not to produce any. This is accomplished by using ambient air as a heat source for a longer period of time.

Tables 6-14 through 6-16 present a summary of annual energy use by each of the systems analyzed as well as their cost characteristics. All of the observations made for the single-family residential ACES applications hold for the multi-family applications. The various ACES configurations result in significant annual energy savings, but at a cost that is unacceptable for systems installed at today's prototype prices. However, under the reduced equipment price scenario the economic picture is very favorable. As was the case with the single-family residences, component cost reductions result in a more energy efficient Cost Optimized ACES.

6.4 RESULTS FOR THE COMMERCIAL BUILDINGS

Table 6-17 presents the ACES configurations for the Full, Minimum and Cost Optimized systems. All of the previous observations for residential ACES relative to configurations still apply. However, the commercial ACES differs significantly from the residential systems when the discussion turns to economic attractiveness.

Table 6-13. ACES Configurations of the Multi-Family Residences

SYSTEM TYPE AND LOCATION	SYSTEM CHARACTERISTICS						
	TANK INSULATION	TANK SIZE(FT^3)	COLLECTOR AREA (FT^2)	COLLECTOR TYPE	HEAT PUMP TYPE	CHANGEOVER TEMPERATURE(^oF)	ELECTRIC BACKUP
MINNEAPOLIS							
FULL	YES	16928	2124	SG	WS	NONE	NO
MINIMUM	YES	8192	2718	SG	WS	NONE	NO
COST OPTIMIZED							
- 1978 INSTALLATION	NO	8192	0	NONE	DS	15	YES
- 1982 INSTALLATION	NO	12800	0	NONE	DS	15	YES
ATLANTA							
FULL	YES	21632	0	NONE	WS	NONE	NO
MINIMUM	YES	2592	180	ABS	WS	NONE	NO
COST OPTIMIZED							
- 1978 INSTALLATION	YES	2592	0	NONE	DS	30	NO
- 1982 INSTALLATION	YES	21632	0	NONE	WS	NONE	NO
PHILADELPHIA							
FULL	YES	33800	108	ABS	WS	NONE	NO
MINIMUM	YES	5000	1188	ABS	WS	NONE	NO
COST OPTIMIZED*							
- 1978 INSTALLATION	YES	5000	0	NONE	DS	20	NO
- 1982 INSTALLATION	YES	10368	0	NONE	DS	30	NO

NOTE: SG = SINGLE GLAZE, DG = DOUBLE GLAZE, ABS = ABSORBER, WS = WATER SOURCE, DS = DUAL SOURCE

*1978 Configuration does not classify as an ACES.

Table 6-14. Economic Characteristics by HVAC/DHW Systems for the Minneapolis Multi-Family Residence

HVAC SYSTEM (HEATING PLANT/ COOLING PLANT)	INITIAL EQUIPMENT COST (DOLLARS)		ANNUALIZED COSTS (DOLLARS)				YEARLY ENERGY USE (BTU X 10^{-6})		COP
			TOTAL		ENERGY				
	1978	1982	1978	1982	1978	1982	ELECTRIC	FOSSIL	
NATURAL GAS/ELECTRIC[1]	10281	10281	3550	3431	3956	3915	46.18	755.81	.73
OIL/ELECTRIC[2]	10062	10062	4256	3972	5074	4775	200.44	482.48	.85
AIR-TO-AIR HEAT PUMP[2]	13887	13887	4922	4544	5539	5148	383.98	0.0	1.52
ELECTRIC/ELECTRIC[2]	9653	9653	5423	5019	6930	6440	542.29	0.0	1.08
FULL ACES[3]	93795	45024	9895	5078	2109	1961	169.77	0.0	3.45
MINIMUM ACES[3]	95057	45633	10386	5478	2633	2447	181.79	0.0	3.22
COST OPTIMIZED ACES[3]	35208	19220	6158	4034	4551	3723	270./241.	0.0	2.16/2.44

NOTES
1. Natural gas fired domestic hot water heater
2. Electric domestic hot water heater
3. Desuperheater domestic hot water heater

Table 6-15. Economic Characteristics of HVAC/DHW Systems for the Atlanta Multi-Family Residence

HVAC SYSTEM (HEATING PLANT/ COOLING PLANT)	INITIAL EQUIPMENT COST (DOLLARS)		ANNUALIZED COSTS (DOLLARS)				YEARLY ENERGY USE (BTU X 10^{-6})		COP
			TOTAL		ENERGY				
	1978	1982	1978	1982	1978	1982	ELECTRIC	FOSSIL	
NATURAL GAS/ELECTRIC[1]	10792	10792	3764	3550	4480	4273	102.26	279.57	1.07
OIL/ELECTRIC[2]	10796	10796	5313	4939	6861	6409	219.83	104.82	1.26
AIR-TO-AIR HEAT PUMP[2]	16096	16096	5570	5160	6613	6167	239.10	0.0	1.71
ELECTRIC/ELECTRIC[2]	10798	10798	6056	5625	8005	7465	293.93	0.0	1.39
FULL ACES[3]	52317	25111	6207	3895	3472	3238	132.08	0.0	3.10
MINIMUM ACES[3]	39888	19145	6052	4188	4551	4244	168.88	0.0	2.42
COST OPTIMIZED ACES[3]	31514	25111	5564	3895	4750	3238	177.78/132.08	0.0	2.30/3.10

NOTES
1. Natural gas fired domestic hot water heater
2. Electric domestic hot water heater
3. Desuperheater domestic hot water heater

Table 6-16. Economic Characteristics of HVAC/DHW Systems for the Philadelphia Multi-Family Residence

HVAC SYSTEM (HEATING PLANT/ COOLING PLANT)	INITIAL EQUIPMENT COST (DOLLARS)		ANNUALIZED COSTS (DOLLARS)				YEARLY ENERGY USE (BTU X 10^{-6})		COP
			TOTAL		ENERGY				
	1978	1982	1978	1982	1978	1982	ELECTRIC	FOSSIL	
NATURAL GAS/ELECTRIC [1]	10951	10951	3492	3287	4046	3855	61.4	490.2	.82
OIL/ELECTRIC[2]	10969	10969	4837	4464	6113	5664	207.1	257.2	.98
AIR-TO-AIR HEAT PUMP[2]	14566	14566	5139	4710	6142	5648	276.9	0.0	1.64
ELECTRIC/ELECTRIC[2]	11142	11142	5857	5374	7660	7045	389.2	0.0	1.16
FULL ACES[3]	70820	33993	6786	3817	2392	2200	123.3	0.0	3.69
MINIMUM ACES[3]	57190	27451	6162	3709	2687	2471	151.7	0.0	2.99
COST OPTIMIZED ACES[3]*	31518	18278	4475	3039	2989	2546	174.9/157.2	0.0	2.6/2.89

NOTES

1. Natural gas fired domestic hot water heater
2. Electric domestic hot water heater
3. Desuperheater domestic hot water heater

*Cost Optimized configuration in 1978 does not classify as an ACES.

Table 6-17. Commercial Building ACES Configurations

SYSTEM TYPE AND LOCATION	SYSTEM CHARACTERISTICS						
	TANK INSULATION	TANK SIZE (FT^3)	COLLECTOR AREA (FT^2)	COLLECTOR TYPE	HEAT PUMP TYPE	CHANGEOVER TEMPERATURE(^oF)	ELECTRIC BACKUP
MINNEAPOLIS							
FULL	YES	78732	0	NONE	WS	NONE	NO
MINIMUM	YES	16251	3078	SG	WS	NONE	NO
COST OPTIMIZED*							
- 1978 INSTALLATION	YES	16251	0	NONE	DS	-10	YES
- 1982 INSTALLATION	YES	16251	0	NONE	DS	-10	YES
ATLANTA							
FULL	YES	24876	0	NONE	WS	NONE	NO
MINIMUM	YES	10302	465	ABS	WS	NONE	NO
COST OPTIMIZED*							
- 1978 INSTALLATION	YES	10302	0	NONE	DS	20	YES
- 1982 INSTALLATION	YES	10302	0	NONE	DS	20	YES
PHILADELPHIA							
FULL	YES	78732	0	NONE	WS	NONE	NO
MINIMUM	YES	17603	3628	ABS	WS	NONE	NO
COST OPTIMIZED*							
- 1978 INSTALLATION	YES	17603	0	NONE	DS	20	YES
- 1982 INSTALLATION	YES	17603	0	NONE	DS	20	YES

NOTE: SG = SINGLE GLAZE, DG = DOULBE GLAZE, ABS = ABSORBER, WS = WATER SOURCE, DS = DUAL SOURCE

*Cost Optimized Configuration does not classify as an ACES.

Tables 6-18 through 6-20 present the economic characteristics of all the study systems in each of the geographic locations as well as each system's annual energy usage. Once again, ACES delivers significant energy savings. The important difference between residential and commercial systems is that the commercial systems are economically superior to oil, gas and electric systems at today's equipment prices in all locations. The major reason for this result is that the commercial ACES, with both high and low side storage, can take maximum advantage of off-peak rates. In addition, the ACES can be used to significantly reduce the magnitude of on-peak demand. That is, the ACES is an economically feasible load shed/demand control device in commercial applications.

6.5 SUMMARY

Table 6-21 summarizes the economic performance of the Cost Optimized ACES/system for each building type in each geographic location in terms of the amount of time that is required for the system to breakeven and payback with respect to the conventional systems. For the purposes of this study breakeven and payback are defined as follows:

- Breakeven--Year when the cumulative fuel savings of the ACES equals the cumulative incremental non-fuel related cash outlays (in some analyses this point is termed the payback).

- Payback--Year when the cumulative net saving equals the total remaining incremental non-fuel cash outlays.

Table 6-18. Economic Characteristics of HVAC/DHW Systems for the Minneapolis Commercial Building

HVAC SYSTEM (HEATING PLANT/ COOLING PLANT)	INITIAL EQUIPMENT COST (DOLLARS)		ANNUALIZED COSTS (DOLLARS)				YEARLY ENERGY* USE (BTU X 10^{-9})		COP
			TOTAL		ENERGY				
	1978	1982	1978	1982	1978	1982	ELECTRIC	FOSSIL	
NATURAL GAS/ELECTRIC[1]	69720	69720	16315	15272	23707	22389	.165/.379	1.35/1.35	.894/.780
OIL/ELECTRIC[2]	68470	68470	16293	15123	23751	22188	.224/.440	1.01/1.01	1.09/.932
ELECTRIC/ELECTRIC[2]	66930	66930	17702	16372	26504	24632	.980/1.20	0.0	1.38/1.13
FULL ACES[3]	148358	145085	17384	15847	19078	17731	.408/.575	0.0	3.32/2.35
MINIMUM ACES[3]	182376	149548	20417	17573	22073	20514	.559/.726	0.0	2.42/1.86
COST OPTIMIZED SYSTEM[3]	80084	78317	14486	13388	24001	22307	.743/.931	0.0	1.82/1.45

NOTES
1. Natural gas fired domestic hot water heater
2. Electric domestic hot water heater
3. Desuperheater domestic hot water heater

*First figure denotes consumption without distribution energy; second figure includes distribution energy.

Table 6-19. Economic Characteristics of HVAC/DHW Systems for the Atlanta Commercial Building

HVAC SYSTEM (HEATING PLANT/ COOLING PLANT)	INITIAL EQUIPMENT COST (DOLLARS)		ANNUALIZED COSTS (DOLLARS)				YEARLY ENERGY* USE (BTU X 10^{-9})		COP
			TOTAL		ENERGY				
	1978	1982	1978	1982	1978	1982	ELECTRIC	FOSSIL	
NATURAL GAS/ELECTRIC[1]	66330	66330	28749	26890	44297	41587	.400/.646	1.0/1.0	1.32/1.12
OIL/ELECTRIC[2]	65690	65690	28629	26657	44141	41233	.447/.692	.741/.741	1.55/1.29
ELECTRIC/ELECTRIC[2]	64730	64730	32350	30095	50635	47217	1.00/1.24	0.0	1.84/1.48
FULL ACES[3]	106483	104292	23905	21771	36755	34278	.577/.762	0.0	3.20/2.42
MINIMUM ACES[3]	129753	107589	25073	22420	38025	35425	.666/.850	0.0	2.77/2.17
COST OPTIMIZED SYSTEM[3]	81649	78654	23694	21459	38115	35508	.644/.830	0.0	2.87/2.23

NOTES
1. Natural gas fired domestic hot water heater
2. Electric domestic hot water heater
3. Desuperheater domestic hot water heater

*First figure denotes consumption without distribution energy; second figure includes distribution energy.

Table 6-20. Economic Characteristics of HVAC/DHW Systems for the Philadelphia Commercial Building

HVAC SYSTEM (HEATING PLANT/ COOLING PLANT)	INITIAL EQUIPMENT COST (DOLLARS		ANNUALIZED COSTS (DOLLARS)				YEARLY ENERGY* USE (BTU X 10^{-9})		COP
			TOTAL		ENERGY				
	1978	1982	1978	1982	1978	1982	ELECTRIC	FOSSIL	
NATURAL GAS/ELECTRIC[1]	57130	57310	18877	17516	30708	28387	.251/.497	1.45/1.45	.980/.860
OIL/ELECTRIC[2]	56205	56205	18288	16886	29686	27471	.304/.550	1.11/1.11	1.19/1.01
ELECTRIC/ELECTRIC[2]	56628	56628	19697	18082	32264	29761	1.14/1.40	0.0 0.0	1.47/1.20
FULL ACES[3]	147465	144465	17659	16073	22798	20966	.487/.697	0.0	3.45/2.41
MINIMUM ACES[3]	182064	138801	19343	16576	24005	22074	.657/.867	0.0	2.55/1.94
COST OPTIMIZED ACES[3]	85867	82867	16576	15085	23267	21396	.619/.829	0.0	2.72/2.03

NOTES
1. Natural gas fired domestic hot water heater
2. Electric domestic hot water heater
3. Desuperheater domestic hot water heater

*First figure denotes consumption without distribution energy; second figure includes distribution energy.

Table 6-21. Breakeven and Payback Duration of the Cost Optimized ACES/System for Each Building Type in Each Location

	ELECTRIC/ ELECTRIC	HEAT PUMP/ ELECTRIC	OIL/ ELECTRIC	GAS/ ELECTRIC
Minneapolis Cost Optimized ACES				
Single-Family Residence	1/7	1/7	8/14	NP
Multi-Family Residence	11/12	11/12	NP	NP
Commercial Building*	5/11	N/A	6/12	6/12
Atlanta Cost Optimized ACES				
Single-Family Residence	4/10	5/14	3/10	20/20
Multi-Family Residence	9/11	9/10	11/12	NP
Commercial Building*	6/10	N/A	7/11	7/11
Philadelphia Cost Optimized ACES				
Single-Family Residence	1/6	1/7	2/9	12/16
Multi-Family Residence	7/10	9/11	10/11	17/18
Commercial Building*	3/10	N/A	3/10	3/10

NOTES: NP=NO PAYBACK

N/A - NOT APPLICABLE

*Cost Optimized Configuration does not classify as an ACES.

6.5.1 Sensitivity of Results

The results of this study have been based on a single set of economic assumptions. Although these assumptions are assumed to be reasonable it is inconceivable that the future will exactly match these estimations. Changes in the assumptions will have a direct effect on the annual cost which, in essence, will affect the economic viability of the ACES.

To give an indication of the effect that changes in these assumptions have on the predicted viability of the ACES, a number of perturbations have been made on the economic inputs. The parameters used and the ranges over which they were varied are shown below:

- Real Discount Rate 1% - 4%
- Mortgage Rate 9% - 12%
- Tax Bracket 25% - 35%
- Maintenance Cost 0.1% - 3%
- Property Tax 1% - 4%
- On Period of period energy charge for the primary and secondary seasons ($/KWH)

  .104 - .033 .160 - .022

  .044 - .033 .060 - .022
- Electricity escalation rate in two blocks

  .568% - 4.940%

  .076% - 2.300%
- Oil escalation rate in two blocks

  1.511% - 9.066%

  0.364% - 2.304%

- Gas escalation rate in four blocks

  2.180% - 13.080%

  1.222% - 7.320%

  0.873% - 4.940%

  0.768% - 2.300%

The results of this analysis indicate that the economic viability of the ACES is very sensitive to the assumed value of the property tax, maintenance cost and escalation rates, while it is relatively insensitive to the assumed values of the other parameters. Fortunately, any conceivable change in the fuel escalation rates would tend to increase the viability of the ACES concept. An increase in the assumed value of the maintenance cost or property tax would tend to make the ACES concept less viable. A decrease in the assumed value of the maintenance cost or property tax would tend to make the ACES concept more viable. The detailed results of this analysis are given in Section 5.4 of Volume II.

SECTION 7.0
CONCLUSIONS

The overall objective of the project was to assess the energy effectiveness and the economic viability of the ACES concept on a regional level. The economic viability was to be assessed by determining the cost-competitiveness of the single-family, multi-family, and commercial ACES with other more conventional heating and cooling systems. This section provides the highlights of the results discussed in Section 6.0.

SINGLE-FAMILY RESIDENCES

- The optimum level of tank insulation is dependent on the interaction of climatic extremes and the relative magnitude of the heating and cooling loads. Heat in-leakage to the ice tank can be significant.

- The type of solar collector used is a function of the climatic location. It is more cost-effective to use the air coil and produce less ice than to use the solar collector and melt off excess ice.

- Dual source heat pumps are used in all locations in the Cost Optimized ACES/system.

- The Cost Optimized ACES are economically superior to both the Full and Minimum configurations.

- The Full ACES are the most energy efficient of all the systems analyzed because they maximize interseasonal energy transfer.

- The ACES can be three to four times more energy efficient than the conventional systems.

- When compared to the Cost Optimized ACES, the maximized interseasonal energy savings of the Full ACES do not economically justify the required storage capital costs.

- Under current equipment cost constraints, the residential ACES are not in general cost-competitive with conventional systems.

- Using the reduced price scenario, the residential ACES are economically superior to conventional systems (oil, heat pump, electric and sometimes gas).

- As capital costs drop, the cost optimized ACES changes configuration, causing an increase in energy effectiveness.

- The energy saving capability of the ACES with seasonal COP as high as 3.69 is extremely favorable (this is not an upper limit of the ACES COP; it is merely the highest value found in this study).

- Cost savings in the residential sector could be greatly enhanced by utilizing a high side storage system (hot tank). This configuration would significantly reduce on-peak utilization during the heating mode.

MULTI-FAMILY RESIDENCES

Once again the tank insulation is dependent on geographic location. In Minneapolis, where the heating load far exceeds the cooling load, the heat in-leakage to the ice tank provides free ice melting. The type of solar collector that should be used is again dependent on the geographic location.

However, solar energy is still not a cost-effective method of getting rid of excess ice. In cases where the loads are not balanced, the most cost-effective method of getting rid of excess ice is simply not to produce any. This is accomplished by using ambient air as a heat source for a longer period of time.

All of the observations made for the single-family residential ACES applications hold for the multi-family applications. The various ACES configurations result in significant annual energy savings, but at a cost that is unacceptable for systems installed at today's prototype prices. However, under the reduced equipment price scenario the economic picture is very favorable. As was the case with the single-family residences, component cost reductions result in a more energy efficient Cost Optimized ACES.

One final observation should be made regarding the application of ACES in residential buildings. ACES are much more energy efficient than the current systems that use electricity to provide space heating and cooling and domestic hot water. Thus, the ACES has a large potential to significantly reduce the national consumption of source energy if electricity is considered to be the fuel of the future.

COMMERCIAL OFFICE BUILDINGS

All of the previous observations for residential ACES relative to configurations still apply. However, the commercial ACES differs significantly from the residential systems when the discussion turns to economic attractiveness. Once again, ACES delivers significant energy savings. The important difference between residential and commercial systems is that the commercial systems are economically superior to oil, gas and electric systems at today's equipment prices in all locations. The major reason for this result is that the commercial ACES, with both high and low side storage, can take maximum advantage of off-

peak rates. In addition, the ACES can be used to significantly reduce the magnitude of on-peak demand. That is, the ACES is an economically feasible load shed/demand control device in commercial applications.

SECTION 8.0
RECOMMENDATIONS

- Parasitic power losses significantly degrade seasonal COPs. Additional effort is needed on system level integration to reduce these losses.

- Reduced cost techniques (such as open cycle excess ice disposal or other means of ice disposal) should be investigated.

- Off-peak cold storage yields considerable summer dollar savings which are diminished by on-peak usage during the heating season. High side storage (hot tank) should therefore be investigated.

- Commercialize and market the commercial ACES/Cost Optimized system concept.

- Initiate the marketing of the residential ACES:
  - Penetrate the marketplace with viable ACES concepts.
  - Initiate government funded R&D for the first few ACES (1-20).
  - Utilize ACES in demonstration projects such as Federal building programs. This should include 50 to 500 ACES installations.
  - The next 5,000 to 10,000 ACES should be sold as load shed devices. This would allow the concept to be initiated into the private sector.

- Investigate other ACES options such as:
  - High side storage.
  - Open system ice disposal.
  - Coupling of ground storage as a heat source.
  - Heat driven or engine driven ice-maker heat pump.

SECTION 9.0
STUDY LIMITATIONS

It is the nature of scientific investigation to raise more questions than it answers. As a consequence, any answer arising from such investigation will usually be qualified by the identification of several other lines of inquiry. This evaluation was no exception. Several areas outside the scope and resources of this study were identified as having a potentially large positive effect on the economic attractiveness of the ACES. These were:

- Increased Volumetric Packing Fraction--This study used a packing factor of 0.4--(the maximum currently achievable with an ice plate system). However, an in-bin type of ice-producing system would make it possible to increase the packing factor to 0.8 which would decrease the required tank size by a factor of two. Since the tank is a very costly component of the ACES, an increased packing factor will result in a dramatically decreased system cost.

- Level of Tank Insulation--Only two values of tank insulation were used in this study. They were sufficient to indicate whether or not a tank should have insulation but were not sufficient to determine the economically optimal level of insulation.

- Ice Tank Cost--This study used the costs associated with a reinforced concrete tank. The tank material was chosen because of its structural integrity over a wide range of tank sizes. Residential applications of ACES would be more attractive if a lower cost tank construction could be employed.

- Base Price of Fuels--As was found in the sensitivity analysis, the economic viability of the ACES is extremely sensitive to the price of fuel. Only one scenario was used for this study. In the event of

another oil embargo or the unavailability of natural gas, the resultant increase in price could make the ACES "instantly" cost-competitive with conventional systems.

APPENDIX

CONTRACT STATEMENT OF WORK

The following paragraphs are the Statement of Work from Contract 7470, Economic Evaluation of the Annual Cycle Energy System.

ECONOMIC ANALYSIS OF ACES

I. INTRODUCTION

The contractor will assess the economic viability of the Annual Cycle Energy System (ACES); that is, he will determine its economic competitiveness with other, more conventional, heating and cooling systems. The contractor will do the economic analysis for three ACES and four conventional system configurations, three building types, and three different climatic zones in the United States. An important by-product of the study will be the determination of the economically optimum ACES configuration for each building type in each climatic zone.

II. HVAC SYSTEM CONFIGURATIONS

Three ACES configurations will be analyzed for each building type and for each climatic condition, as follows;

1. Full ACES. This configuration provides the heating, cooling, and domestic hot water demands of the building while minimizing total energy consumption. The water-ice storage volume is selected to maximize interseasonal energy transfer. The Full ACES utilizes an electrically driven unidirectional heat pump, a water source evaporator (ice-maker), an insulated water-ice storage tank, provision for producing and storing hot water, and solar panels and outdoor air coils as needed.
2. Minimum ACES. This configuration provides the heating, cooling, and domestic hot water demands of the building under the restriction of minimum water-ice storage capability, which is defined as storage sufficient to provide heating for 12 consecutive sunless days during the coldest month. The components of the system are the same as for the Full ACES.

3. Cost-Optimized ACES. This configuration provides the heating, cooling, and domestic hot water demands of the building at minimum total cost over the life of the system. It may contain all of the components of the Full ACES, and may, in addition, incorporate an air source evaporator which is automatically used when it is more efficient for the system to operate as an air-to-air heat pump than as a water-to-air heat pump. The use of stored sensible heat as well as heat of fusion will be considered as an option for reducing life cycle costs.

For comparison purposes, the Contractor will calculate equivalent economics for four conventional central forced-air heating and cooling systems as follows:

1. Electric resistance heating, electric air conditioning, and electric domestic water heating.
2. Air-to-air heat pump (best available, 1980) and electric domestic water heating.
3. Oil-fired furnace, electric air conditioning, and electric domestic water heating.
4. Gas-fired furnace, electric air conditioning, and gas domestic water heating.

III. TYPES OF BUILDINGS AND CLIMATES TO BE CONSIDERED

The contractor will consider at least three representative types of buildings in three different climatic regions. The ORNL-TM will provide to the contractor the design specifications for each building in each location, and will supply hourly weather tapes for the representative regions. The representative buildings and climates are as follows:

1. Buildings:
   a. Single-family residence, 1800 ft^2.
   b. Multi-family dwelling, 10 units of 1600 ft^2 each.
   c. Medium-sized commercial or office building, 60,000 ft^2.

2. Climates
   a. Atlanta (2800 degree-days)
   b. Philadelphia (5000 degree-days)
   c. Minneapolis (7850 degree-days)

IV. COSTS AND PERFORMANCE DATA ACQUISITION

The contractor will develop a data base for both the conventional and ACES systems, describing each component or sub-system in terms of:

1. Performance characteristics, as applicable.
2. Initial installed costs.
3. Energy use rate and/or operating costs.
4. Maintenance and replacement schedules, if any.

In case of the various ACES configurations being investigated, where firm cost data are not available because of the newness of technology, the contractor will synthesize expected costs for the 1980 target date by analogy and comparison with similar existing systems and practices, and shall estimate the band of uncertainty associated with each synthesized cost. The overall effect of these cost uncertainties on the predicted economic viability of the ACES shall be investigated by parametric analysis.

V. METHODOLOGY OF SYSTEMS ANALYSIS

The contractor will develop a computer program for performing the economic analyses of the various heating and cooling systems under investigation. The computer program must be compatible with an IBM 360 computer and be written in a problem-oriented language compatible with ANS FORTRAN. The computer program should have data input characteristics that are sufficiently flexible to allow economic analysis of arbitrary heating and cooling systems, i.e., both conventional systems and differing ACES configurations.

Input to the economic analysis program will include, but need not be limited to, the following:

1. Specification of building type.
   a. Construction design data necessary for computing hourly and design-day heating and cooling loads.
   b. Auxiliary thermal energy requirements, i.e. hot water.
   c. Life-style and building use data, i.e., building thermostat settings, occupancy schedules, internal sources, and factors affecting infiltration.
2. Specification of the heating and cooling system.
   a. Number of alternative operating modes.
   b. Logical decision criteria for selecting operating mode.
   c. Components train associated with each operating mode.
   d. Costs and operating data for each component train.
3. Specification of climate.
   a. Variation in time of outdoor temperature, humidity, and wind speed.
   b. Solar data and/or time variation in the amount of cloud cover.
4. Specification of economic parameters.
   a. Current regional costs and expected escalation factors for gas, oil, and electricity.
   b. Fuel use efficiencies.
   c. Property taxes, mortgage costs, and income tax allowances to the extent that their levels affect the selection of a heating and cooling system.

For an ACES configuration, the computer program must first size the individual units of each components train before the economic analysis can be performed. Components that can be sized for capacity on the basis of the design-day loads calculations include: the compressor, indoor fan coils, pumps, and others. Components that must be sized to accomodate any mismatch between the annual heating and cooling loads in the specified climatic region include: the ice storage bin, the radiant/convector panel, and the air and water surface areas of the split evaporator. In sizing this latter category of components to the

building-climate conditions, it is necessary in the computer output to delineate between the dependent and independent variables of the system. Thus, for example, for a fixed ice storage bin size, the required area of the radiant/convector panel may be determined, or vice versa.

The output from the economic analysis program should include, as a minimum:

1. HVAC components sizes required for the specified building and climate.
2. Annual energy consumption by the system.
3. Cash flow schedule (initial capital costs, operating costs, maintenance costs, and replacement costs).
4. Present worth of all cash outlays for the system, discounted over an appropriate system lifetime.
5. Payback period of incremental ACES costs as compared to conventional systems.

VI. SPECIFIC CASES TO BE ANALYZED USING THE COMPUTER PROGRAM

The contractor shall use the economic analysis program to analyze the range of cases described earlier. In summary, these cases include the following:

1. Three types of buildings.
2. Three representative climates.
3. Economic analysis of Full ACES, Minimum ACES, and Costs-Optimized ACES for each of the nine combinations of buildings and climate.
4. Economic analysis of the four conventional heating and cooling systems specified for each of the nine combinations of buildings and climate.
5. For the single case of the single-family dwelling in the Philadelphia area, a parametric analysis of the effect of ACES costs uncertainties on:
   a. ACES optimization
   b. ACES competitive position with respect to conventional systems.

VII. DELIVERABLES

Task 1. Draft Report

The contractor shall deliver four (4) copies of a Draft Report for review and approval by the ORNL-TM. The Draft Report shall:

1. Include a summary relating significant results and conclusions;
2. Describe the analytical methodology used;
3. Detail, for each building type in each climatic area (nine cases):
   a. The time dependent heating, cooling, and water heating loads;
   b. The system configurations, including volumes, areas, and capacities, for each HVAC system;
   c. The initial capital costs, the annual energy use, the annual operating costs, and the present worth of all cash outlays discounted over twenty (20) years for each HVAC system;
4. Include the cost data base generated and used in the study (this shall include both real and synthesized costs, and shall describe the methodology of the synthesis);
5. Include a printout and explanation of the computer program developed; and
6. Include a listing and source of all economic parameters used, such as present fuel costs and their escalation rates, etc.

Task 2. Final Report

Upon approval of the Draft Report by ORNL-TM, the contractor shall deliver eight (8) copies of the Final Report and one (1) set of camera-ready reproducibles of the Final Report to the ORNL-TM. The Final Report shall contain, as a minimum, all of the requirements of the Draft Report of Task 1, and shall be responsive to the comments and criticisms, if any, made by the ORNL-TM in the review of the Draft Report.

Computer Program

At the time of delivery of the Final Report, the Contractor shall deliver one (1) copy of the computer program or programs source decks on tapes or cards that will run on an IBM 360 computer. The program shall be written in a problem-oriented language compatible with ANS FORTRAN.

VIII. DELIVERY SCHEDULE

Task 1. Draft Report.

Within six (6) months from the start of the contract.

Task 2. Final Report and Computer Program

Within thirty (30) days from approval of the Draft Report by the ORNL-TM. (Allow 10 days for ORNL-TM approval of Draft Report).

IX. ADDITIONAL DELIVERABLES

The Contractor shall, by the tenth day of each calendar month, submit to the ORNL-TM a monthly report of costs, manpower, and schedules on DOE Forms 553, 534, and 535 (see Enclosure VIII).

INTERNAL DISTRIBUTION

1. L. A. Abbatiello
2. H. G. Arnold
3. S. I. Auerbach
4. M. Baker
5. P. R. Barnes
6. V. D. Baxter
7. J. L. Blue
8. J. W. Boyle
9. R. S. Carlsmith
10. S. A. Carnes
11. J. E. Christian
12. W. L. Cooper, Jr.
13. F. A. Creswick
14. G. A. Cristy
15. G. A. Dailey
16. R. M. Davis
17. S. G. DeCicco
18. R. C. DeVault
19. J. E. Dobson
20. R. D. Ellison
21. P. D. Fairchild
22. W. Fulkerson
23. C. A. Gallagher
24. K. S. Gant
25. J. Googin
26. V. O. Haynes
27. M. A. Hill
28. N. E. Hinkle
29. E. A. Hirst
30. R. B. Honea
31. C. C. Hopkins
32. G. E. Kamp
33. S. I. Kaplan
34. C. R. Kerley
35. J. O. Kolb
36. M. E. LaVerne
37. D. W. Lee
38. W. P. Levins
39. H. M. Long
40-45. P. M. Love
46. J. W. Michel
47-66. R. E. Minturn
67. J. C. Moyers
68. E. A. Nephew
69. H. Perez-Blanco
70. A. M. Perry
71. C. H. Petrich
72. H. Postma
73. M. W. Rosenthal
74. T. H. Row
75. G. Samuels
76. M. Schweitzer
77. H. T. Shapira
78. A. D. Shepherd
79. J. S. Tatum
80. R. C. Tepel
81. D. B. Trauger
82. E. K. Triegel
83. D. J. Walukas
84. A. Witten
85. Biology Division Library
86-87. Central Research Library
88. Document Reference Section
89-90. Energy Information Library
91. Laboratory Records - RC
92-94. Laboratory Records Department
95. ORNL Patent Office

EXTERNAL DISTRIBUTION

96. Mr. Roy W. Abbott, Manager, Advanced Technology, General Electric Company, Appliance Park, Building 6-208, Louisville, KY 40225
97. Mr. Ben Adams, Adams Craft Herz Walker, 106 Administration Road, Oak Ridge, TN 37830
98. Mr. Kent Anderson, Trane Company, 2020 14th Street, Arlington, VA 22201
99. Mr. Bruce Appelbaum, Gordian Associates, Inc., 711 Third Avenue, New York, NY 10017
100. Mr. Hamp Barnett, Power Research Staff, Tennessee Valley Authority, 350 Commerce Union Bank Building, Chattanooga, TN 37401

101. Mr. Larry B. Barrett, Potomac Electric Power Company, Manager, Energy Management Services Division, 1900 Pennsylvania Avenue, NW, Washington, D.C. 20068
102. Mr. Gene Brewer, NIBS, Suite 700, 1015 15th Street, NW, Washington, D.C. 20005
103. Mr. William B. Briggs, McDonnell-Douglas Company, Department E080, Post Office Box 516, St. Louis, MO 63166
104. Mr. Thomas Cahill, Energy Systems Division, Carrier Corporation, Carrier Tower, Post Office Box 4800, Syracuse, NY 13221
105. Mr. Joe Canal, General Electric Company, Troup Highway, Tyler, TX 75711
106. Dr. W. James Cole, Program Director, New York State Energy Research and Development Authority, Agency Building No. 2, Empire State Plaza, Albany, NY 12223
107. Dr. David Colvin, Triangle Research and Development Corporation, Post Office Box 12696, Research Triangle Park, NC 27709
108. Professor George E. Courville, Department of Physics, Fairleigh-Dickinson University, Teaneck, NJ 07666
109. Mr. John J. Cuttica, Chief, Technology and Consumer Products Branch, Department of Energy, Room GH 065, MS GH 095, Forrestal Building, 1000 Independence Avenue, SW, Washington, D.C. 20585
110. Mr. H. E. Davis, Concentration Specialists, Inc., 26 Dundee Park, Andover, MA 01810
111. Mr. Gordon D. Duffy, Editor, Air Conditioning News, Post Office Box 2600, Troy, MI 48084
112. Mr. William A. Elder, President, Automated Air Systems, Inc., 1723 Rhoadmiller Street, Richmond, VA 23220
113. Mr. Douglas Funkhouser, Urban Systems Research and Engineering, Inc., 36 Boylston Street, Cambridge, MA 02138
114. Mr. Ted Gillis, Lennox Industries, Promenade Towers, Post Office Box 400450, Dallas, TX 75240
115. Mr. George E. Gilmore, Consolidated Edison Company of New York, Inc., Four Irving Place, New York, NY 10003
116. Dr. L. R. Glicksman, Department of Mechanical Engineering, Massachusetts Institute of Technology, Cambridge, MA 02139
117. Mr. Dieter Grether, Vice President Engineering, Friedrich Air Conditioning and Refrigeration, Post Office Box 1540, San Antonio, TX 78295
118. Mr. Gerald C. Groff, Research Division, Carrier Corporation, Syracuse, NY 13201
119. Mr. Donald G. Hoffard, Post Office Box 3221, Portland, OR 97208
120. Mr. F. Honnold, Consumer Products Division, Carrier Corporation, Syracuse, NY 13201
121. Mr. E. J. Horan, Exxon Research and Engineering Company, Post Office Box 8, Linden, NJ 07036
122. Mr. H. Jaster, General Electric Corporate Research and Development, General Electric Company, Schenectady, NY 13201
123. Mr. Ted Kapus, Director, Consumer Products Division, Office of Buildings and Community Systems, Forrestal Building, 1000 Independence Avenue, SW, Washington, D.C. 20585

124. Dr. R. M. Kelso, Associate Professor, School of Architecture, University of Tennessee, 100 Estabrook Hall, Knoxville, TN 37916
125. Mr. R. W. King, Manager, Advanced Engineering, Copeland Corporation, Sydney, OH 45365
126. Dr. Edward A. Kush, Associate Scientist, Solar Research Group, Brookhaven National Laboratory, Upton, NY 11973
127. Mr. Jim Leggoe, Philadelphia Electric Company, 2301 Market Street, Philadelphia, PA 19101
128. Mr. Herbert Lindahl, Manager Advanced Engineering, Bohn Aluminum and Brass Corporation, Heat Transfer Division, 1625 East Voorhees Street, Danville, IL 61832
129. Mr. Quentin Looney, Energy Utilization and Conservation Technology, Electric Power Research Institute, 3412 Hillview Avenue, Post Office Box 10412, Palo Alto, CA 94303
130. Mr. Harold G. Lorsch, Manager, Energy Laboratory Engineering Department, The Franklin Institute Research Laboratories, Twentieth and Parkway, Philadelphia, PA 19103
131. Mr. Hubert P. Luckett, Editor-in-Chief, Popular Science, 380 Madison Avenue, New York, 10017
132. Mr. Jim McCallum, Executive Editor, Air Conditioning and Refrigeration Business, 614 Superior Avenue West, Cleveland, OH 44113
133. Mr. Jack McCormick, Research Engineer, Northern States Power Company, 414 Nicollet Mall, Minneapolis, MN 55401
134. Mr. Robert Mauro, Electric Power Research Institute, 3412 Hillview Avenue, Post Office Box 10412, Palo Alto, CA 94303
135. Mr. John Millhone, Director, Office of Buildings and Community Systems, Department of Energy, Forrestal Building, 1000 Independence Avenue, SW, Washington, D.C. 20585
136. Mr. Dan Myers, Refrigeration Systems, 611 State Street, Newburg, IN 47630
137. Mr. Kenneth J. Nemeth, Executive Director, Southern States Energy Board, 2300 Peachford Road, One Exchange Place, Suite 1230, Atlanta, GA 30338
138. Mr. Bill Riley, Chief Engineer, Advance Development, Heil-Quaker Corporation, 647 Thompson Lane, Post Office Box 40566, Nashville, TN 37204
139. Mr. James K. Risher, Energy Resources Center, Honeywell, Inc., 2600 Ridgway Parkway, Minneapolis, MN 55413
140. Mr. A. H. Rosenfeld, Lawrence Berkeley Laboratory, Building 50B, Room 5246, Berkeley, CA 94720
141. Dr. David P. Ross, Senior Scientist, Energy Resources and Conservation Division, Science Applications, Inc., 2028 Powers Ferry Road, Suite 260, Atlanta, GA 30339
142. Mr. John D. Ryan, Program Manager, Technology and Consumer Products Branch, Department of Energy, Forrestal Building, 1000 Independence Avenue, SW, Washington, D.C. 20585
143. Mr. James L. Schulze, Technology Program Manager, General Electric Company, Appliance Park, Louisville, KY 40225
144. Mr. D. E. Sherpereel, Research and Engineering Center, Whirlpool Corporation, Benton Harbor, MI 49022

145. Dr. Mason H. Somerville, Manager, Engineering Experiment Station, University of North Dakota, Grand Forks, ND 48202
146. Mr. E. Spannahke, White Consolidated Industries, 11770 Berea Road, Cleveland, OH 44111
147. Mr. Richard D. Stewart, Manager, Advanced Technology Programs, General Electric Company, Appliance Park, Building 35, Louisville, KY 40225
148. Mr. Steven Strong, Solar Design Associates, 271 Washington Street, Canton, MA 02021
149. Mr. Floyd Stuckey, FSA Engineering Consultants, 315 East Sixth Street, Winfield, KS 67156
150. Dr. Walter D. Syniuta, Advanced Mechanical Technology, Inc., 141 California Street, Newton, MA 02158
151. Ms. Susan S. Waddle, Department of Energy Oak Ridge Operations Office, Oak Ridge, TN 37830
152. Mr. Frank S. Wang, Research Specialist, Functional Products and Systems, Larkin Lab, Swede Road, Midland, MI 48640
153. Mr. H. F. Waser, FHP Manufacturing Company, 610 Southwest 12th Avenue, Pampano Beach, FL 33060
154. Mr. Robert G. Werden, Werden & Associates, Inc., Post Office Box 414, Jenkintown, PA 19046
155. Mr. Frank White, AiResearch Manufacturing Company, Post Office Box 3413, Oak Ridge, TN 37830
156. Institute of Energy Analysis, ORAU Library
157. Asst. Mgr., Energy Research and Development, DOE-ORO
158-184. Technical Information Center, Department of Energy, Post Office Box 62, Oak Ridge, TN 37830
185-550. Energy Conservation Distribution Mailing List and Energy Conservation Office (Building 9102-1, Room 2)

☆U.S. GOVERNMENT PRINTING OFFICE: 1980-640-245/060