ornl

OAK
RIDGE
NATIONAL
LABORATORY

UNION
CARBIDE

ORNL/CON-43

Theory and Design of an Annual Cycle Energy System (ACES) for Residences

E. A. Nephew
L. A. Abbatiello
M. L. Ballou

Conservation
Division of Buildings
and
Community Systems

OPERATED BY
UNION CARBIDE CORPORATION
FOR THE UNITED STATES
DEPARTMENT OF ENERGY

Printed in the United States of America. Available from
National Technical Information Service
U.S. Department of Commerce
5285 Port Royal Road, Springfield, Virginia 22161
NTIS price codes—Printed Copy: A16 Microfiche A01

This report was prepared as an account of work sponsored by an agency of the United States Government. Neither the United States Government nor any agency thereof, nor any of their employees, makes any warranty, express or implied, or assumes any legal liability or responsibility for the accuracy, completeness, or usefulness of any information, apparatus, product, or process disclosed, or represents that its use would not infringe privately owned rights. Reference herein to any specific commercial product, process, or service by trade name, trademark, manufacturer, or otherwise, does not necessarily constitute or imply its endorsement, recommendation, or favoring by the United States Government or any agency thereof. The views and opinions of authors expressed herein do not necessarily state or reflect those of the United States Government or any agency thereof.

ORNL/CON-43

Contract No. W-7405-eng-26

Energy Division

THEORY AND DESIGN OF AN ANNUAL CYCLE ENERGY SYSTEM (ACES) FOR RESIDENCES

E. A. Nephew
L. A. Abbatiello

Energy Division

M. L. Ballou

Computer Sciences Division

DEPARTMENT OF ENERGY

Office of Buildings and Community Systems

Date Published: May 1980

OAK RIDGE NATIONAL LABORATORY
Oak Ridge, Tennessee 37830
operated by
UNION CARBIDE CORPORATION
for the
DEPARTMENT OF ENERGY

RELATED REPORTS IN THIS SERIES

H. C. Fischer et al., *Summary of Annual Cycle Energy System Workshop I* Held October 29-30, 1975 at Oak Ridge, Tenn., ORNL/TM-5243, Oak Ridge National Laboratory, July 1976.

J. C. Moyers et al., *Design Report for the ACES Demonstration House,* ORNL/CON-1, Oak Ridge National Laboratory, Oak Ridge, Tenn., October 1976.

E. A. Nephew et al., *The Annual Cycle Energy System: Initial Investigations*, ORNL/TM-5525, Oak Ridge National Laboratory, Oak Ridge, Tenn., October 1976.

I. G. Cantor, *Investigation of Alternate Types of Water Storage Components to be Utilized in Conjunction with the ACES System,* ORNL/Sub-78/14233/1, Oak Ridge National Laboratory, Oak Ridge, Tenn., December 1977.

E. C. Hise, *Performance Report for the ACES Demonstration House August 1976 through August 1977,* ORNL/CON-19, Oak Ridge National Laboratory, Oak Ridge, Tenn., March 1978.

H. C. Fischer, *Development and Testing of a Single-Plate and a Two-Plate Ice-Maker Heat Pump,* ORNL/CON-21, Oak Ridge National Laboratory, Oak Ridge, Tenn., April 1978.

A. S. Holman and V. R. Brantley, *ACES Demonstration: Construction, Startup, and Performance Report,* ORNL/CON-26, Oak Ridge National Laboratory, Oak Ridge, Tenn., October 1978.

V. D. Baxter, *Intermediate Report on the Performance of Plate-Type Ice-Maker Heat Pumps,* ORNL/CON-23, Oak Ridge National Laboratory, Oak Ridge, Tenn., October 1978.

A. S. Holman et al., *Annual Cycle Energy System (ACES) Performance Report November 1977 through September 1978,* ORNL/CON-42, Oak Ridge National Laboratory, Oak Ridge, Tenn. (in preparation).

M. L. Ballou et al., *MAD: A Computer Program for ACES Design Using Monthly Thermal Loads,* Oak Ridge National Laboratory, Oak Ridge, Tenn. (in preparation).

R. E. Minturn et al., *ACES 1979: Capabilities and Potential,* Oak Ridge National Laboratory, Oak Ridge, Tenn. (in preparation).

J. W. MacArthur, *Economic Analysis of Annual Cycle Energy Systems,* Energy Resources Center, Honeywell Inc. (in preparation).

L. A. Abbatiello et al., *Performance and Economics of the ACES and Alternative Residential Heating and Air Conditioning Systems in 115 U.S. Cities,* Oak Ridge National Laboratory, Oak Ridge, Tenn. (in preparation).

CONTENTS

	Page
GLOSSARY	x
PREFACE	xxi
ABSTRACT	xxiii
1. INTRODUCTION	1
1.1 What is an Annual Cycle Energy System?	1
1.2 Full and Partial ACES	3
1.3 Energy Conservation Advantages	3
1.4 Applicability of ACES	4
2. SYSTEM DESCRIPTION	7
2.1 Basic Concepts of ACES	7
2.1.1 Heat flows	8
2.1.2 Modal operating parameters	10
2.1.3 Ice-bin heat balance	18
2.2 Basic Design of ACES	21
2.2.1 Design objectives	21
2.2.2 Design parameters	22
2.2.3 Alternative designs	24
2.3 System Components	25
2.3.1 Primary components	25
2.3.2 Auxiliary components	28
2.4 System Layout and Operating Modes	28
2.4.1 Refrigerant circuit	29
2.4.2 Water heating	30
2.4.3 Space heating and water heating	30
2.4.4 Night heat rejection	30
2.4.5 Space cooling	34
2.4.6 Environmental energy collection	34
3. THERMAL LOADS OF THE BUILDING	37
3.1 Design Hourly Loads	37
3.1.1 Heating load	37
3.1.2 Cooling load	38
3.2 Design Monthly Loads	38
3.2.1 Space-heating loads	39
3.2.2 Space-cooling loads	40
3.2.3 Water-heating loads	41
3.3 Calculation of Ground Temperatures	42
3.4 Bin Heat-Leakage Coefficients	43
REFERENCES	45
4. EQUIPMENT SELECTION AND DESIGN	47
4.1 Heat Pump Mechanical Package	47

Page

4.2 Ice Storage Bin 49
4.2.1 Minimum-ACES bin 50
4.2.2 Full-ACES bin 51
4.3 Ice-Bin Heat Exchanger 52
4.3.1 Description and design criteria 52
4.3.2 Total tubing length 53
4.3.3 Parallel flow circuit design 58
4.4 Ice Bin and Heat Exchanger Design Interaction 65
4.5 Collector Panel Design 66
4.5.1 Test panel design and performance 66
4.5.2 Collector panel size 70
4.6 Waste-Heat Rejector 70

5. RECOMMENDED CONSTRUCTION GUIDELINES 73
5.1 Ice Storage Bin Construction 73
5.1.1 General considerations 73
5.1.2 Recommended bin location 74
5.1.3 Bin structure 74
5.1.4 Bin insulation 76
5.1.5 Waterproof membrane 78
5.1.6 Bin internal assembly for brine-chiller system 78
5.1.7 Bin internal-assembly for ice-maker system . . . 82
5.1.8 Alternative storage bins 83
5.2 Ice-Bin Heat Exchanger 84
5.2.1 Coil configuration of heat exchanger 84
5.2.2 Prefabricated coil modules 86
5.3 Corrosion and Water Treatment 86
5.3.1 General considerations 86
5.3.2 Ice-bin water treatment 87
5.3.3 Brine treatment 88
5.4 Solar Collector Panel 89
5.4.1 Panel installation 89
5.4.2 Use of panel to reject waste heat 90
5.4.3 Freezing protection 90
5.4.4 Energy transfer fluid 91
5.4.5 Brine system venting 91
5.4.6 Solar panel alternatives 92
5.5 Conventional Components and Sensors 92
5.5.1 Pumps and fans 92
5.5.2 Piping and filtration 93
5.5.3 Thermostats 93
5.5.4 Ice inventory sensors 94
5.5.5 Hot water storage tank 94
REFERENCES 95

6. CONTROL AND OPERATING STRATEGIES 97
6.1 Control Objectives 97
6.1.1 Operating strategy 97

Page

6.1.2 Heating season operation 98
6.1.3 Cooling season operation 101
6.2 Control Package Logic 101
6.2.1 Input signals 101
6.2.2 Output signals 102
6.2.3 Control logic equations 103
6.3 Control of Alternative ACES Designs 107
6.3.1 Backup heating system 107
6.3.2 Ambient heat collection 108
6.3.3 Load-management systems 109

7. ESTIMATION OF COSTS 111
7.1 Life-Cycle Costs 111
7.2 Simplified Life-Cycle Cost Analysis 112
7.2.1 Installed cost 112
7.2.2 Salvage value 114
7.2.3 Maintenance costs 114
7.2.4 Electric power cost 116

8. MANUAL ACES DESIGN PROCEDURES 119
8.1 Rapid ACES Design 119
8.1.1 Description of reference houses 119
8.1.2 Rapid ACES design procedure (work form 1) 120
8.1.3 Accuracy of the results 120
8.2 Custom ACES Design 121
8.2.1 Design hourly heating load (work form 2) 121
8.2.2 Design monthly thermal loads (work form 3) . . . 122
8.2.3 Modal operating parameters (work form 4) 122
8.2.4 Solar panel size (work form 5) 123
8.2.5 Annual power consumption (work form 6) 124
8.2.6 ACES life-cycle cost (work form 7) 125
8.3 ACES Design Work Forms and Instructions 126
REFERENCES 151

9. SAMPLE ACES DESIGN PROBLEM 153
9.1 Description of the Problem 153
9.2 Rapid Design Method 153
9.3 Manual Custom-Design Method 154
9.3.1 Determination of thermal loads 156
9.3.2 Component size and system performance 161
9.4 System Costs 178
9.4.1 Life-cycle cost components 179
9.4.2 Life-cycle cost 182

Appendix A. BUILDING THERMAL LOADS DETERMINATION A-1
A.1 Description of the Reference Houses A-3
A.2 Climate Data Sources A-3
A.3 Methods of Loads Calculations A-10

Page

A.3.1 Monthly space-heating loads A-10
A.3.2 Monthly space-cooling loads A-13
A.3.3 Monthly water-heating loads A-14
A.3.4 Computer program A-14
REFERENCES A-16

Appendix B. COMPUTER ACES DESIGNS B-1
B.1 ACES Component Characteristics B-3
B.2 Description of the ACES Design Tables B-3
B.3 ACES Design and Performance Tables B-6
B.3.1 Reference ACES cities B-6
B.3.2 Computer printouts B-9

Appendix C. EXTRA WORK FORMS FOR MANUAL ACES DESIGN C-1

LIST OF FIGURES

Figure		Page
1.1	Regions of ACES applicability	5
2.1	Heat flows during ice phase of ACES operations	11
2.2	Heat flows during supplemental phase of ACES operations	12
2.3	Artist's concept of an ice-maker ACES for a single-family residence	26
2.4	Artist's concept of a brine-chiller ACES for a single-family residence	27
2.5	Schematic of water-heating mode	31
2.6	Schematic of space- and water-heating mode	32
2.7	Schematic of ice-bin heat-rejection mode	33
2.8	Schematic of space-cooling mode	35
2.9	Schematic of collector panel operation	36
4.1	Heat conduction in ice-bin heat exchanger with outer surface convection boundary	54
4.2	Extraction rate density vs lattice spacing	56
4.3	Schematic of ice-bin heat exchanger circuits	59
4.4	Minimum number of parallel circuits in ice-bin heat exchanger	65
4.5	Proposed installation of solar collector panel	67
5.1	Proposed ice storage bin construction	75
5.2	"Foam Form" block	77
5.3	Detail of proposed coil support structure for ice-bin heat exchanger	80
5.4	Proposed installation of ice-bin heat exchanger	85
6.1	System operating and control functions	99

		Page
6.2	Partial control logic diagram	106
8.1	Sample of work form 1 for rapid ACES design	128
8.2	Sample of work form 2 for calculating design day heat load	131
8.3	Sample of work form 3 for ACES design monthly thermal loads	134
8.4	Sample of work form 4 for ACES modal operating parameters	137
8.5	Sample of work form 5 for sizing the solar panel	141
8.6	Sample of work form 6 for estimating ACES annual power consumption	147
8.7	Sample of work form 7 (ACES life-cycle cost)	150
9.1	Completed work form 1 for sample problem	155
9.2	Completed work form 2 for sample problem	157
9.3	Completed work form 3 for sample problem	159
9.4	Completed work form 4 for sample problem	162
9.5	Completed work form 5 for sample problem	169
9.6	Completed work form 6 for sample problem	174
9.7	Completed work form 7 for sample problem	180
A.1	Boundaries of defined geographical zones	A-4

LIST OF TABLES

Table		Page
4.1	Example listing of the capacity ratings of heat pump mechanical packages	48
4.2	Cost-optimized brine temperatures for heat exchanger design calculations	57
4.3	Brine properties at 15°F	63
7.1	Assumed service and maintenance cost schedule for ACES	115
7.2	Present value of ACES maintenance costs as a function of discount rate and annual maintenance cost escalation rate	116
7.3	Present worth factor of ACES power costs as a function of the discount rate and the annual electricity price escalation rate	117
9.1	Planned 1800 ft^2 ranch building	153
9.2	Sample problem ACES design parameters	183
A.1	Characteristics of the reference houses	A-5
A.2	Description of reference houses in 16 zones	A-6
B.1	Assumptions about ACES components	B-4
B.2	Computer solutions for ACES design and performance in 111 U.S. cities	B-10

GLOSSARY

Accumulator — a vessel installed in a heat pump to prevent excessive amounts of liquid refrigerant from entering the compressor and causing possible damage to the bearings and valves.

ACES — an acronym for Annual Cycle Energy System. The ACES is an integrated system designed to provide space heating, water heating, and air conditioning to a building by utilizing a heat pump that obtains heat from water stored in an insulated underground bin. As heat is extracted from the bin during the heating season, most of the water is frozen; the stored ice provides air conditioning in the summer.

ACES, Full — an ACES designed to maximize beneficial interseasonal energy transfer. The ice storage bin is large enough to hold all of the winter-formed ice or that amount of ice needed during the cooling season, whichever is smaller.

ACES, Minimum — an ACES for which the thermal capacity of the ice storage bin is just sufficient to supply the total space-heating and water-heating loads of the building for the coldest two weeks of the heating season without operation of the solar collector panel.

ACES, Partial — an ACES with an ice storage bin that is intermediate in size to that of a full ACES and a minimum ACES.

Air coil — a device used for heating or cooling air under forced convection. A hot or cold fluid is pumped through the heat-exchanger coils of the unit; air convection around the exterior surface of the coils is maintained by means of an electrically driven fan.

Air infiltration — the flow of air into or out of a building caused by wind or by differences between the densities of inside and outside air. This leakage occurs through cracks around windows and doors, and cannot be effectively controlled by the occupants of the building.

Backup heating — a secondary heating system consisting of electrical resistance units installed in the air duct system to supply heat to the building in case the primary heating system is inoperable.

Balance temperature — the outdoor air temperature at which heat losses from a building are balanced by heat gains from internal and solar sources.

Ballast — in a brine-chiller ACES, the weight provided to keep the ice submerged by counteracting the buoyant forces on the ice in the storage bin.

Brine — a solution of methanol in water that serves as the heat-carrying medium in the ACES intermediate heat exchanger circuits.

Brine-chiller system — a refrigeration system for the ACES in which ice is formed around coils immersed in the storage bin. The coils contain brine chilled by the heat pump evaporator.

Compressor — a component of the heat pump that compresses low-temperature refrigerant vapor from the evaporator into a high-pressure superheated gas.

Condenser — a component of the heat pump in which the high-temperature refrigerant gas gives up heat and becomes a medium-temperature saturated liquid.

Control logic package — a control device that is programmed to receive the input signals of various ACES sensors and to respond by implementing proper modes of operation.

Convection — the transmission of heat by the movement of a mass of fluid (e.g., air).

Coefficient of performance (COP) — the ratio of the heating or cooling delivered by a system to the energy consumed, in consistent units.

Degree-days, monthly — the sum of the differences between 65°F and the mean daily temperature for each day of the month. Alternatively, the integral of $(T_{BAL} - T_o)$ with respect to time, where T_{BAL} is the balance temperature of the house, T_o is the outdoor temperature, and the time period of integration is one month.

Design-day temperature — the outdoor air temperature in a given locality that is equaled or exceeded 99% of the time, on the average, during the coldest three consecutive months.

Design hourly heating load — the rate of heat input to a building required to maintain a desired indoor temperature if the outdoor temperature is at its design-day value and the building's internal and solar heat gains are negligible.

Design monthly heating load — the total amount of heat that must be delivered to the building by the heating plant during any given month of the design-year weather in order to maintain a desired indoor temperature regime.

Design-year weather — the 12-month set of outdoor hourly or bin temperatures that is selected for use in an ACES design. The data should represent average weather conditions for a given locality over a 5- to 10-year period.

Discount rate — the rate of return that can be expected on the best alternative investment available to a prospective ACES purchaser.

Energy efficiency ratio (EER) — the efficiency of an air conditioner, defined as the ratio of its rate of cooling, in Btu/h, to its rate of power consumption, in watts. Therefore, EER = 3.412 · COPC, where COPC is the cooling coefficient of performance of the unit.

Evaporator — a component of the heat pump in which the low-temperature boiling refrigerant absorbs heat from the heat source to become a low-temperature saturated, or slightly superheated, vapor.

Fan coil (outdoor) — see air coil. A device for rejecting waste heat from the heat pump compressor to the outdoor ambient air.

Glazed solar panel — a solar heat collection device connected to a heat removal system. The device consists of a black plate, insulated on the bottom and edges, and covered by one or more transparent plates.

Header — a chamber to which the ends of a number of fluid-carrying tubes are connected so that the fluid may flow freely from one tube to another.

Heat collector panel — an ACES component that is used to collect environmental heat — by convection from the outdoor air and by absorption of solar energy.

Heat exchanger — a device that transfers heat from one fluid to another.

Heat of fusion — the quantity of heat necessary to change one pound of a solid into a liquid material without effecting a temperature change. The heat of fusion of ice is 144 Btu/lb.

Heat rejector panel — an ACES component that is used to reject waste heat to the environment — by convection and radiation.

Humidity ratio — the ratio of the mass of water vapor to the mass of dry air contained in a given sample of moist air.

Ice bin coil — a tube heat exchanger submerged in the ice storage bin, used to either extract heat from or add heat to the bin.

Ice maker system — a heat pump system for the ACES in which ice is frozen directly on evaporator plates and is periodically harvested as particulate ice.

Ice-packing fraction — the ratio of the weight of loosely packed ice that fills a given volume to the weight of solid ice that would fill the same volume. The effective density of the loose ice is equal to the ice-packing fraction times the density of solid ice (57.0 lb/ft^3).

Ice phase — for the ACES, that portion of the annual cycle that begins in the autumn when the bin temperature starts to decline from its summer value of 45°F, as a result of increasing house demands for heating, and ends during the cooling season when the stored ice in the bin has been exhausted and the bin temperature has again risen to 45°F.

Ice storage bin — an ACES component used to store ice during the heating season or to store heat during the cooling season.

Infiltration — see Air infiltration.

Integrated construction — a cost-saving technique in construction that uses parts of a building, for example, a basement wall, as part of the storage bin structure.

Latent heat (of vaporization) — the quantity of heat necessary to change 1 lb of a liquid to vapor without change of temperature. The latent heat of vaporization of water at 78°F is 1049.5 Btu/lb.

Lattice pitch — the distance between the centers of adjacent pipes, within a bank of heat exchanger pipes that are arranged in a square grid pattern.

Load — the space-heating, water-heating, or air-conditioning demands of the building — to be supplied by the HVAC system.

Load management — a planned, purposeful time displacement between the production of a thermal load capability and its actual delivery. In the ACES, the nighttime generation of cooling capacity to meet daytime cooling needs.

Mass flow rate — the rate of flow of a fluid expressed in pounds per hour.

Mechanical package (ACES) — a prefabricated component consisting of the heat pump compressor, condenser, evaporator, and accumulator as well as the hot water desuperheater and condenser, and the ACES control logic package.

MBtu — a unit of heat equal to one thousand British thermal units.

MMBtu — a unit of heat equal to one million British thermal units.

Operating costs — recurring costs for energy, service, maintenance, parts, and materials that are necessary to operate and maintain the ACES during its useful life.

Owning costs — the initial installed cost of an ACES plus any annual charges for property taxes and insurance.

Panel tilt angle — the angle of tilt of the solar collector from the horizontal, expressed in degrees. For optimum heat collection during winter months, the panel should be tilted southward at an angle, $T = L + 20°$, where L is the latitude (in degrees) of the site location.

Particulate ice — an aggregation of ice granules or particles, as opposed to a mass of solid ice.

Peak demand — the maximum rate of electricity consumption by the ACES system during any given time period.

Present value — the amount of money which must be invested today, at a given discount rate, in order to have a specified amount at a future time.

Radiant energy — energy that is emitted and propagated in wave-form through space or a material medium (e.g. solar energy).

Reference houses — a defined set of single-family houses for which size and level of thermal insulation differ, and for which monthly thermal loads have been calculated and tabulated for purposes of comparison.

Refrigerant — a liquid capable of vaporizing at a low temperature and a low pressure, such as ammonia, which is used for heat transfer in mechanical refrigeration.

Reynolds number — a dimensionless quantity used to distinguish laminar from turbulent fluid flow.

Sensible heat — absorbed heat that is manifested by a change in the temperature of a material rather than a change in its state.

Split-evaporator — for the ACES, a design concept of an evaporator that consists of two sections, allowing the system to operate either as a water-source or as an air-source heat pump.

Steady state — a heat flow or other process that is constant with respect to time.

Supplemental heat — for the ACES, heat that is collected from the environment or that is provided from some other source for melting ice in the ice bin, when necessary.

Supplemental phase — for the ACES, that portion of the annual cycle that begins during the cooling season when the stored ice in the bin has been exhausted and the bin temperature has risen to 45°F and ends in the autumn when, as a result of increasing house demands for heating, the bin temperature starts to decline from its summer value of 45°F.

Thermal envelope — the surface that encloses a building and delineates between the building and the external environment.

Thermal inertia — a delayed response of heat flow through a material to changes in its boundary temperatures. This effect, caused by storage of heat within the material, is sometimes called the "flywheel" effect.

Viscosity — that property of a fluid which resists forces leading to flow or any instantaneous change of shape.

Waste heat — heat from the heat pump compressor during ACES supplemental cooling that must be rejected to the environment.

Waste-heat rejector — a convector panel or outdoor air coil used in ACES to reject waste heat from the heat pump compressor when the ACES is operated in the supplemental cooling mode.

Wetted volume — the volume of the ACES ice storage bin that is available for storing the mixture of ice and water (i.e., the total volume of the bin minus freeboard volume and any volume occupied by an assembly located inside the bin).

Wire-to-water efficiency — for an electrically driven pump, the efficiency of conversion from electrical energy to useful fluid energy.

PREFACE

The purpose of this report is to help designers and contractors gain an understanding of the fundamental concepts of the Annual Cycle Energy System (ACES) for residences and to provide practical procedures and data for the selection and installation of ACES equipment. The design and construction of components that distinguish the ACES from conventional home heating and cooling systems are emphasized. These components are the energy storage tank (ice bin) and the supplemental heat collector (solar/convector panel). Methods for estimating the sizes of components and for computing monthly space-heating, water-heating, and air-conditioning loads are presented. Construction guidelines and procedures for estimating the performance and initial and operating costs of the system are also discussed.

The report is intended to serve the needs of the designer, who seeks information on the basic theory of the ACES and its components, and the contractor, who wishes to estimate optimum sizes of ACES components and to install them with a minimum investment in time. For the contractor, reading Sects. 1, 5, 8, and 9 may be sufficient. Section 1 describes the ACES concept briefly. Section 5 discusses construction and installation and recommends guidelines. Section 8 describes a rapid method for designing an ACES. Section 9, which may prove to be especially useful in understanding the design procedure, is a step-by-step example problem in ACES design for a hypothetical single-family residence.

ABSTRACT

The basic concept of the Annual Cycle Energy System (ACES) — an integrated system for supplying space heating, hot water, and air conditioning to a building — and the theory underlying its design and operation are described. Practical procedures for designing an ACES for a single-family residence, together with recommended guidelines for the construction and installation of system components, are presented. The report gives methods for estimating the life-cycle cost, component sizes, and annual energy consumption of the system for residential applications in different climatic regions of the United States.

1. INTRODUCTION

1.1 What is an Annual Cycle Energy System?

An annual cycle energy system (ACES) is a system designed to provide space heating, water heating, and air conditioning to a building, while consuming significantly less purchased energy than all other known electric heating, ventilating, and air-conditioning (HVAC) systems. For example, during the 1978-1979 heating and cooling seasons a demonstration ACES-equipped house near Knoxville, Tennessee, consumed 6597 kWh while providing annual space-heating, water-heating, and space-cooling loads of 30.1, 15.0, and 18.1 MMBtu (10^6 Btu) respectively. Delivering these same loads to an identically constructed house equipped with a central air-to-air heat pump system and a conventional electric hot water tank required 12,861 kWh of purchased energy. This large energy savings resulted primarily from the central feature of the ACES concept: low-temperature storage and interseasonal transfer of environmental energy.

In the ACES, the energy transfer is by an electrically driven unidirectional heat pump that obtains heat from water stored in an insulated underground tank. As the heat is extracted during the heating season, most of the water is frozen, and the stored ice provides air conditioning in the summer. Thus the heat of fusion of water is available as a heat source in winter and as a heat sink in summer. Because both the heating and cooling outputs of the heat pump are used, the resulting annual coefficient of performance (COP) is very high.

In addition to its function in energy conservation, the ACES lends itself readily to load management. Ice for air conditioning can be made and stored at night, allowing users to take advantage of low off-peak electric rates, where available. If an appreciable fraction of the buildings being served by a utility system were to utilize the storage feature offered by the ACES, a substantial reduction in the needed generating capacity could result.

For the ACES, there are two ice-formation methods that can be used: (1) a coil-in-bin ACES that utilizes chilled brine to freeze the water surrounding heat-exchanger coils immersed in the storage bin;

and (2) the plate-type ice maker, in which ice is formed directly on the evaporator plates of the heat pump and the ice is periodically harvested into the bin. Both the brine-chiller type and the ice-maker type offer certain advantages. With the brine-chiller type, bins approximately one-half the size necessary for the ice-maker type can be used because of the higher ice-packing density in the bin. The brine-chiller type also has simpler refrigeration circuitry and provides a nonfreezing medium, the brine, for the transfer of energy from supplementary sources such as solar panels. With the ice maker, on the other hand, the ice bin coil and its attendant costs and field-crew installation are eliminated and modularization of the system by the manufacturer is made easier.

In actual application, operation of ACES to meet annual space- and water-heating needs will seldom, if ever, result in the production of the exact amount of ice needed for air conditioning. Even in the most favorable geographic locations where average annual heating and cooling demands of the building result in an ice-bin heat balance, variations in weather, living patterns, etc., will upset this balance. Consequently, the amount of ice produced will not be equal to the amount of ice needed for all years. Thus, in designing an ACES, provisions must be made for melting excess ice and for supplemental air conditioning when ice deficits exist. These balancing functions can be accomplished by use of a solar collector panel that collects heat from the environment during the heating season to melt excess ice and by heat pump operation at night during the cooling season to produce chilled water or ice for supplemental air conditioning.

Over the period of a year, the amount of heat extracted from the ice bin to meet space-heating, water-heating, and supplemental cooling demands must be counterbalanced by heat deposits from the collector panel, space cooling, and heat leakage into the ice bin from the surroundings. Annual "energy balance" on the ice bin can be achieved by varying the amounts of ambient heat collected and supplemental cooling provided. The amounts of environmental heat and supplemental cooling required depend upon the house thermal loads and the thermal capacity of the ice bin.

1.2 Full and Partial ACES

The maximum capacity of the ice bin should be equal to either all of the ice that can be produced during the heating season or all of the ice needed for summer cooling, whichever is smaller. A system with a bin of this size is called a full ACES. A minimum ACES is defined as a system equipped with a bin having a thermal capacity sufficient to allow at least two weeks of heat pump operation during the coldest month without resort to supplemental energy. The minimum ACES is a compromise unit designed to reduce capital costs, but at the same time it reduces the energy conservation potential of the system. A partial ACES has a bin capacity greater than that of a minimum ACES but less than that of a full ACES.

Of course, systems with smaller bins than those of the minimum ACES can be fabricated. Such systems function primarily as summer load-management systems (e.g., by providing all-day cooling in which the compressor need be operated only during off-peak hours), but provide little interseasonal energy transfer and cannot properly be called ACES. If properly designed, they can save some energy by providing a heating system of constant capacity and efficiency no matter what the outdoor temperature may be.

1.3 Energy Conservation Advantages

The principal energy conservation advantages of a full ACES are as follows:

1. During the heating season, the heat pump operates from a constant-temperature heat source (the ice bin) and functions as a constant-capacity heat pump without suffering performance degradation at low outdoor temperatures.
2. During the cooling season, all or some of the cooling needs of the building are supplied by winter-formed ice (i.e., ice produced as a by-product during the heating season).
3. Supplemental summer cooling, required after the winter-formed ice has been exhausted, can be supplied by nighttime heat pump

operation. This shifts the cooling demand to off-peak hours when electricity rates may be lower and when base-load utility plants of higher efficiency are used. In addition, the efficiency of heat pump operation is slightly greater during the cool of the night than it is during the heat of the day.

4. Year round, the heat pump produces hot water two to three times more efficiently than does resistance heating and, in the summer, produces ice that can be used for air-conditioning purposes.

A partial ACES exhibits the same energy conservation features as a full ACES; however, because less ice is carried over from the heating season, more supplemental cooling must be provided during the summer. The additional electricity required for heat pump operation in the summer makes the partial ACES less energy efficient than a full ACES. However, use of the smaller ice bin of a partial ACES effects a reduction in initial system costs that may offset the cost of higher electricity consumption. The trade-off between the costs of electricity and ice bin construction should be carefully examined when selecting the optimum bin size, taking into account anticipated escalation of electricity rates.

1.4 Applicability of ACES

The ACES is applicable throughout most of the United States. The anticipated performance of an ACES varies with the climatic region where it is located (Fig. 1.1). In Fig. 1.1 the annual coefficient of performance (ACOP), defined as the annual amount of energy services delivered to the building divided by the amount of electrical energy purchased to operate the system, is displayed for a full ACES installed in a well-insulated home. Annual coefficients of performance as high as 3.4 may be obtained in some parts of the country, using present-day compressors.

The ACES performs best in regions where the ice formed during the heating season can be used to meet a substantial portion of the summer cooling needs of the building. The system is not applicable in regions

ORNL-DWG 79-16634

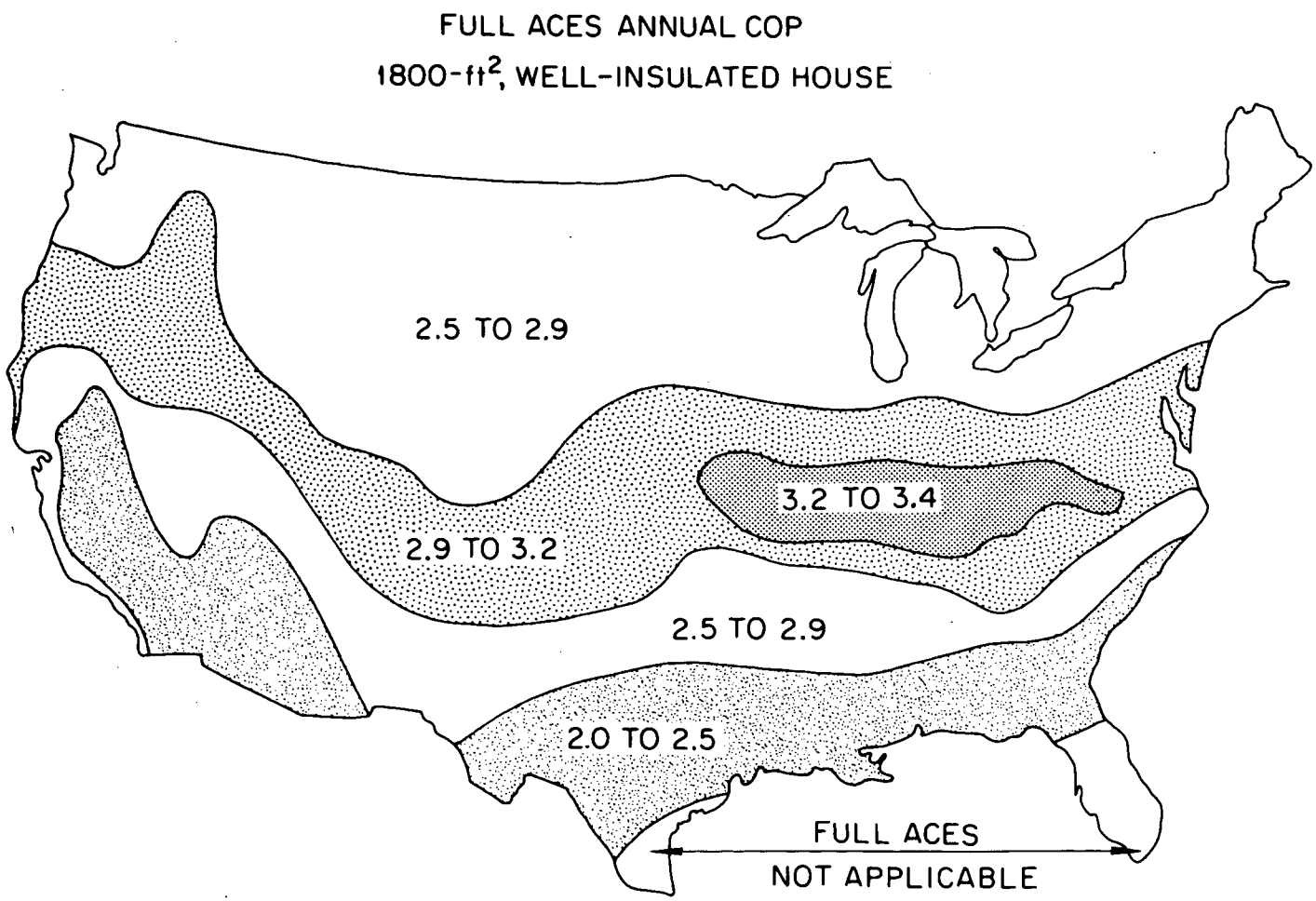

Fig. 1.1. Regions of full ACES applicability.

where very little ice is formed during the heating season, such as in southern Florida and southern Texas. For these regions, small ice storage systems designed to accomplish only diurnal summer load management are more economical. Economic considerations may also favor the selection of a minimum ACES over a full ACES, even in areas of the country where the full-ACES concept is viable. This is because the poorer performance of a minimum ACES, which exhibits ACOPs ranging from 2.0 to 3.0, may be offset by the lower initial cost.

The selection of a heat-collector panel is very important. An unglazed panel that can collect heat from the ambient air as well as from solar radiation is generally recommended for regions having less than about 7000 heating degree-days each year. The use of unglazed panels in colder regions, where very little heat can be collected from the air, could result in the need for large, expensive panels. For this reason, the use of either glazed panels or an alternative supplementary heat system may be desirable in these regions.

2. SYSTEM DESCRIPTION

2.1 Basic Concepts of ACES

The basic concepts of an ACES can best be understood by considering the monthly heat flows into and out of the ice storage bin. The energy level of the bin varies continually in response to the heating and cooling demands of the building; each year the ice inventory in the bin increases from zero to maximum and then declines back to zero. During the heating season the heat pump makes monthly withdrawals of energy from the ice bin to supply heat for water and space heating. As the sensible energy of the bin is extracted, the bin temperature declines from 45°F to 32°F. Further energy withdrawals then result in the formation of ice. Heat leakage into the bin from the surroundings and monthly deliveries of heat from the collector panel partially replenish the bin energy, but continuing heat withdrawals eventually cause the ice inventory in the bin to reach storage bin capacity. The environmental heat delivered to the ice bin by the collector panel is regulated so that the bin reaches full ice inventory at the end of the heating season.

At the beginning of the cooling season, the full inventory of winter-formed ice in the bin is available to provide air conditioning to the house. As the cooling season progresses, heat is extracted from the house by circulating chilled brine from the ice-bin heat exchanger through an indoor fan coil. The house heat that is collected is delivered back to the ice bin. These energy deposits gradually melt all of the ice in the bin and raise the bin temperature to 45°F, the maximum useful bin temperature for providing space cooling. For a full-ACES application in a northern climate, the bin temperature reaches 45°F at the end of the cooling season and the system is ready to begin a new annual cycle. For a partial ACES, or a full-ACES application in a southern climate, the depletion of winter-formed ice occurs before the end of the cooling season and supplemental cooling is required.

Supplemental cooling is provided by operating the heat pump at night during the summer to remove heat from the storage bin. The removal of

heat lowers the temperature of the bin to an acceptable level for use in air conditioning for the following day. The heat extracted from the storage bin, together with the energy required to operate the heat pump, is rejected as waste heat at night to the outdoors. Supplemental cooling increases the electrical energy consumption of ACES by requiring summertime operation of the heat pump and also imposes the need for a waste-heat rejector. The waste-heat rejector can be either an outdoor fan coil or, if properly sized, the same convector panel that is used to collect heat during the winter. Supplemental cooling, as provided by the ACES, also yields effective diurnal load-management capability because the major electrical draw of the system occurs at off-peak hours.

2.1.1 Heat flows

A quantitative description of ACES operations requires a determination of the principal heat flows that the system must maintain to supply the annual thermal loads of the building. In the following discussion, upper case symbols are used to represent annual heat flows and lower case symbols represent monthly heat flows. Thus the annual amount of heat delivered by the system to meet the space-heating needs of the building is Q_H MBtu where

$$Q_H = q_H(1) + q_H(2) + \ldots + q_H(12) ,$$

$$Q_H = \sum_{m=1}^{12} q_H(m) . \qquad (2.1)$$

Here, $q_H(1)$ represents the January space-heating load, $q_H(2)$ the February space-heating load, and so on.

The nomenclature used to denote the principal monthly heat flows of an ACES is presented below. [Corresponding annual heat flows are obtained by summing the monthly heat flows, as shown previously (Eq. 2.1)].

$q_H(m)$ = space-heating load (MBtu)
$q_{HW}(m)$ = water-heating load (MBtu)
$q_{HT}(m)$ = combined load for space heating and hot water production (MBtu)
$q_C(m)$ = space-cooling load (MBtu)
$q_L(m)$ = heat leakage into the ice storage bin (MBtu)
$q_{COL}(m)$ = heat collection by solar/convector panel (MBtu)
$q_{BR}(m)$ = bin heat removal for supplemental cooling (MBtu)
$q_E(m)$ = electricity consumption (MBtu)
$q_{WD}(m)$ = heat withdrawal from the ice storage bin (MBtu)
$q_{DP}(m)$ = heat deposit in the ice storage bin (MBtu)

The direction of heat flows $q_H(m)$, $q_{HW}(m)$, and $q_{BR}(m)$ is "uphill," that is, from a lower to a higher temperature. These heat flows require a driving mechanism — the heat pump — and electrical energy to maintain the flow. The "downhill" heat flows $q_C(m)$, $q_L(m)$, and $q_{COL}(m)$ occur naturally as a result of the temperature gradient. Because heat flow out of and into the ice storage bin is of central importance in ACES design theory, it is useful to define "bin transfer coefficients" that relate $q_{WD}(m)$ and $q_{DP}(m)$ to the delivered house heating or cooling loads. Bin transfer coefficients are denoted by $\alpha_P(M)$, where the subscript P refers to the season of the annual cycle and M is the mode of operation.

The four principal bin transfer coefficients that are essential to an ACES design analysis are:

$\alpha_I(H)$ = the quantity of heat withdrawn from the ice bin for each unit of heat delivered for space or water heating when the system is operating in the winter heating mode.

$\alpha_I(C)$ = the quantity of heat deposited in the ice bin for each unit of heat removed from the building when the system is operating in the ice-melt, space-cooling mode.

$\alpha_S(H)$ = the quantity of heat withdrawn from the ice bin for each unit of heat delivered for space or water heating when the system is operating in the summer heating mode.

$\alpha_S(C)$ = the quantity of heat deposited in the ice bin for each unit of heat removed from the building when the system is operating in the bin heat-rejection, space-cooling mode.

Expressions for the numerical evaluation of these bin transfer coefficients are provided in Sect. 2.1.2.

The heat flows that occur when the ACES is operating in the *ice phase* of its annual cycle (ice buildup — constant ice inventory — ice decline) are shown in Fig. 2.1. The ice phase of operations begins in the autumn when heat withdrawals from the bin exceed heat deposits. The ice phase continues throughout the heating season as the ice inventory increases and subsequently is held at bin capacity by operation of the collector panel. Heat deposits by the collector panel are stopped when the ice-decline portion of the cycle is reached. The ice phase lasts into the cooling season until all of the ice has been melted by summer air-conditioning heat deposits and the tank has reached a temperature of 45°F.

The ACES heat flows that occur when the system is operating in the *supplemental phase* of its annual cycle are shown in Fig. 2.2. The supplemental phase of operations begins when the ice phase ends and continues throughout the remainder of the cooling season. The supplemental phase ends with the advent of a new heating season. During the supplemental phase, the daily temperature of the ice bin fluctuates between 45°F and a lower temperature that is set by the daily space-cooling needs of the building. Thus the average temperature of the bin is higher than when the system is operating in the ice phase. This higher average bin temperature reduces heat leakage into the tank from the surroundings and also lowers the cooling-rate capacity of the indoor fan coil because of the higher temperature of the chilled brine that is circulated through it.

2.1.2 Modal operating parameters

The primary operating parameters required for ACES design analysis include both (1) the coefficients of performance (COPs) and (2) the bin transfer coefficients for each mode of operation. The modal COPs are used in computing the monthly and annual electricity consumption and the annual COP of the system. The bin transfer coefficients are used in

ORNL-DWG 79-16635R2

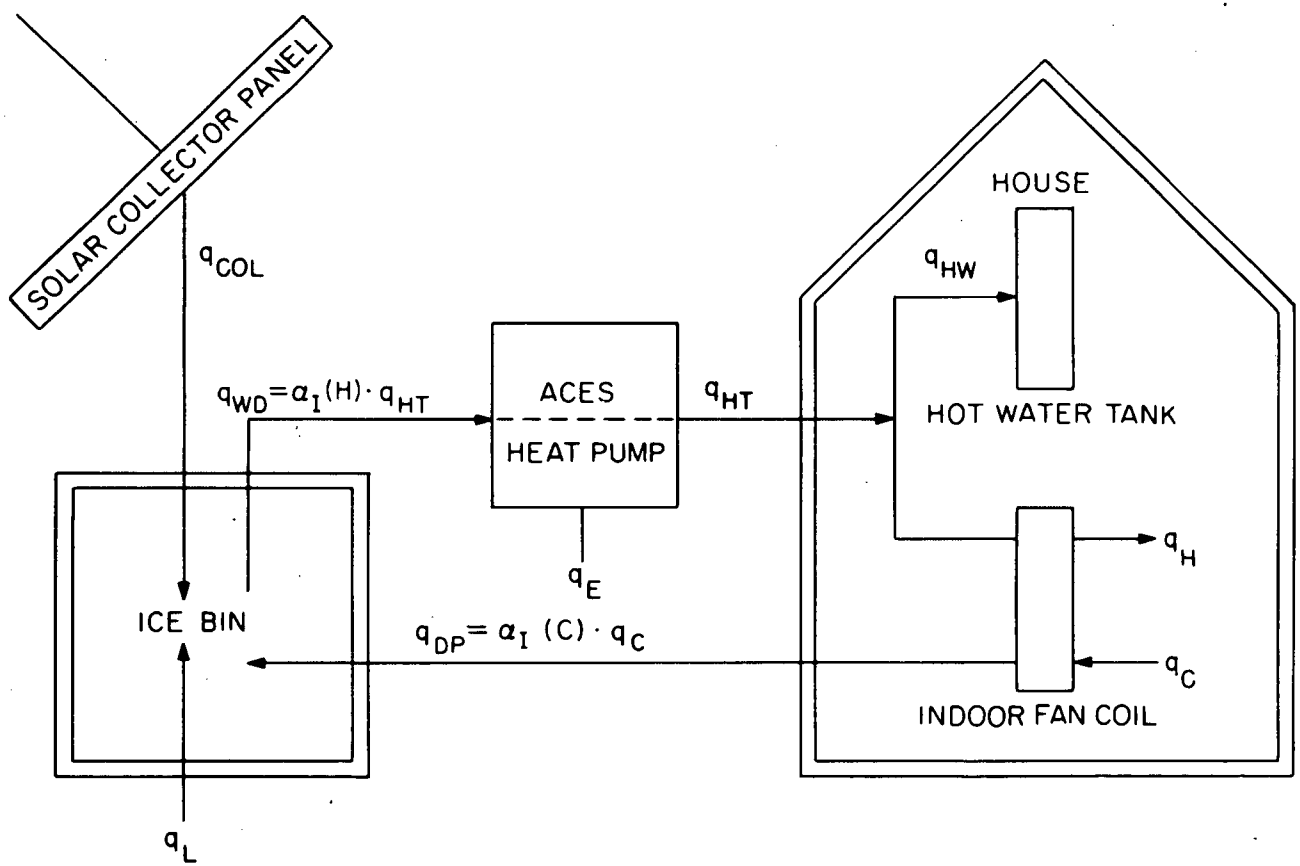

Fig. 2.1. Heat flows during ice phase of ACES operations.

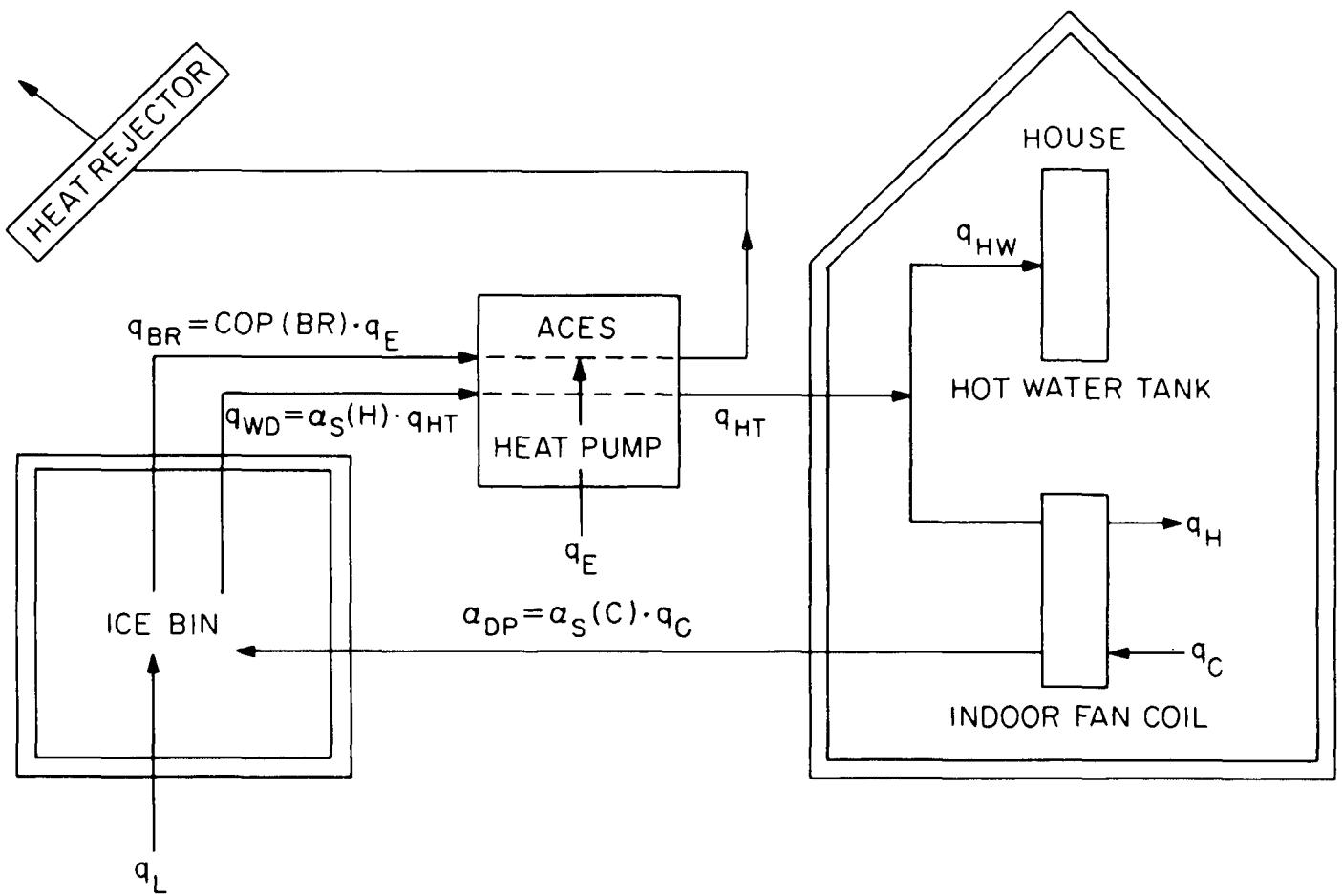

Fig. 2.2. Heat flows during supplemental phase of ACES operations.

determining the ice-bin heat flow that results as the system responds to meet the monthly heating and cooling demands of the building. Based upon these ice-bin heat flows, seasonal heat balances can be calculated for the ice bin to determine the amount of heat that must be collected by the solar panel and/or the amount of heat that must be rejected from the bin by summertime operation of the heat pump. This information is used to determine supplemental cooling requirements and the size of the solar panel.

In the ACES, a variety of different operating modes can be established by the control system to meet changing load demands. For example, throughout the annual cycle, the system can be called upon to supply space heating, water heating, space and water heating, space cooling, or space cooling and water heating. In each of these operating modes, the system exhibits a specific COP and the requested house load imposes an ice-bin heat flow according to a specific bin transfer coefficient. The operating parameters and duration times of all of the modes are needed for a full design analysis. In practice, however, space heating and space cooling predominate during the ice phase of operations, and water heating and space cooling predominate during the supplemental phase. In the following analysis, only these four modes of system operation are distinguished.

The nomenclature used to denote system operating variables is defined below:

E_C = heat pump compressor motor draw, kW;
E_F = indoor fan coil motor draw, kW;
E_{HB} = hot brine pump motor draw, kW:
E_{CB} = cold brine pump motor draw, kW;
E_{HW} = hot water pump motor draw, kW;
E_{OF} = outdoor fan coil motor draw, kW;
C_I = evaporator-side COP of the compressor (ice phase);
C_S = evaporator-side COP of the compressor (supplemental phase);
H_I = indoor fan coil cooling rate (32°F ice phase brine), kW;
H_S = indoor fan coil cooling rate (45°F supplemental phase brine), kW;

H_{DS} = hot water desuperheater capacity rating, kW; and
H_{CD} = hot water condenser capacity rating, kW.

Ice phase heating mode

The system COP in the ice phase heating mode is defined as the ratio of the heat delivered for water heating or space heating to the electrical energy consumed by the system, in consistent units,

$$COP_I(H) = \frac{(1 + C_I)E_C + E_F + E_{HB} + 0.75E_{CB}}{(E_C + E_F + E_{HB} + E_{CB})} . \tag{2.2}$$

The above expression is based on the assumption that the ACES mechanical package is located indoors and that motor heat losses contribute to the delivered heating load. The compressor-only cooling COP during the ice phase is obtained from the manufacturer's listing of the steady-state rating of the model. The wire-to-water efficiency of the cold brine circulating pump is assumed to be 25%.

The bin transfer coefficient, or the fraction of the delivered heat load that is obtained from the ice storage bin, is given by the expression

$$\alpha_I(H) = \frac{C_I \cdot E_C - 0.25E_{CB}}{(1 + C_I)E_C + E_F + E_{HB} + 0.75E_{CB}} . \tag{2.3}$$

By comparison with Eq. (2.2), this expression can be shown to be equivalent to

$$\alpha_I(H) = \frac{COP_I(H) - 1}{COP_I(H)} . \tag{2.4}$$

Thus the monthly heat withdrawal from the ice storage bin to meet house space-heating and water-heating needs when the system is operating in the ice phase of its annual cycle is equal to

$$q_{WD}(m) = \alpha_I(H)[q_H(m) + q_{HW}(m)] . \tag{2.5}$$

Ice phase cooling mode

The system COP in the ice phase cooling mode is defined as the ratio of the heat removed from the building (or the space cooling delivered) to the electrical energy consumed by the system, in consistent units. That is,

$$COP_I(C) = \frac{H_I - E_F}{E_F + E_{CB}} . \tag{2.6}$$

The above expression is based on the assumption that, although the ACES mechanical package is located indoors, motor heat losses from the package are vented to the outdoors during cooling mode operation. The ACES exhibits a very high modal COP when operating in the ice phase cooling mode because only the indoor fan motor and the cold brine pump motor draw electrical power.

The bin transfer coefficient, or the ratio of heat deposited in the ice bin to the total cooling load delivered, is expressed by

$$\alpha_I(C) = \frac{H_I + 0.25E_{CB}}{H_I - E_F} . \tag{2.7}$$

Thus the monthly heat deposit in the ice bin that is necessary to meet house space-cooling needs when operating in the ice phase space-cooling mode is

$$q_{DP}(m) = \alpha_I(C) \cdot q_C(m) . \tag{2.8}$$

Supplemental phase heating mode

The delivery of heat to the house during the supplemental phase is principally for the purpose of producing hot water, although some space heating may be required on cool, late-summer nights. The system COP in the supplemental phase heating mode is defined as the ratio of the heat delivered to the electrical energy consumed by the system, in consistent

units. This COP can be written in terms of the output ratings of the hot water desuperheater and condenser, H_{DS} and H_{CD}, respectively.

$$COP_S(H) = \frac{H_{DS} + H_{CD}}{E_C + E_{CB} + E_{HW}} . \tag{2.9}$$

The bin transfer coefficient (or the ratio of the heat extracted from the bin to the delivered heating) is expressed by

$$\alpha_S(H) = \frac{C_S E_C - 0.25 E_{CB}}{(1 + C_S) E_C} . \tag{2.10}$$

Supplemental phase cooling mode

The ACES must establish two principal heat flows during the supplemental phase cooling mode of operation (Fig. 2.2). First, heat must be delivered from the building and deposited in the ice bin to provide space cooling to the building. Second, heat must be extracted from the ice bin and rejected as waste heat to the outdoor environment in order to maintain an ice-bin heat balance. In the following analysis, modal operating parameters are defined separately for the bin heat-deposit and the bin heat-removal systems. These parameters are then combined to yield an overall system COP for the supplemental phase cooling mode.

The COP of the space-cooling delivery system is defined as the ratio of the heat removed from the building for space cooling to the electrical energy consumed by the delivery system, in consistent units. Using the previously defined nomenclature, the COP of the delivery system for depositing heat in the bin, COP(BD), is expressed by

$$COP(BD) = \frac{H_S - E_F}{E_F + E_{CB}} . \tag{2.11}$$

This equation is based on the assumption that motor heat losses from the ACES mechanical package are vented to the outdoors during cooling-mode operation.

The bin transfer coefficient (or the ratio of the heat deposited in the ice bin to the total cooling load delivered) is expressed by

$$\alpha_S(C) = \frac{H_S + 0.25E_{CB}}{H_S - E_F} . \tag{2.12}$$

Equations (2.11) and (2.12) are identical to the corresponding expressions for the ice phase cooling parameters, except that a different value is required for the indoor fan cooling rate. In supplemental phase cooling, brine at 45°F is circulated through the indoor fan coil, whereas in the ice phase the temperature of the brine is near 32°F. The cooling rate of the indoor fan coil is directly proportional to the temperature difference existing between the circulating brine and the indoor air.

The bin heat-removal system is comprised of the heat pump and an outdoor waste-heat rejector, which may be either a convector panel or an outside air coil. The net amount of bin heat removal (MBtu) that is required during the supplemental phase to maintain an ice-bin heat balance is expressed by

$$Q_{BR}(SP) = \alpha_S(C) \bullet Q_C(SP) + Q_L(SP) - \alpha_S(H) \bullet Q_{HT}(SP) , \tag{2.13}$$

where the Qs are the total heat flows occurring during the supplemental phase. The COP of the heat rejection system is expressed by

$$COP(BR) = \frac{C_S E_C - 0.25E_{CB}}{E_C + E_{CB} + E_{HB} + E_{OF}} . \tag{2.14}$$

This equation is based on the assumption that an outdoor fan coil is used as the waste-heat rejector.

The overall system COP for the supplemental phase cooling mode, $COP_S(C)$, is defined as the ratio of the delivered space-cooling load to the total purchased energy consumed by the space-cooling delivery system and the bin heat-removal system. This ratio is expressed by

$$COP_S(C) = \frac{Q_C(SP)}{Q_C(SP)/COP(BD) + Q_{BR}(SP)/COP(BR)} \cdot \tag{2.15}$$

The above expression can be simplified by inserting the definition for $Q_{BR}(SP)$ given in Eq. (2.13) and rearranging the terms. The result is

$$COP_S(C) = [COP(BD)^{-1} + K_o COP(BR)^{-1}]^{-1} , \tag{2.16}$$

where the variable K_o is defined as

$$K_o = \alpha_S(C) + \frac{Q_L(SP)}{Q_C(SP)} - \alpha_S(H) \cdot \frac{Q_{HT}(SP)}{Q_C(SP)} . \tag{2.17}$$

In Eq. (2.17) the value of K_o will be reduced by either a decrease in ground heat leakage into the bin, $Q_L(SP)$, or by an increase in the house demands for space heating and hot water production, $Q_{HT}(SP)$. Equation (2.16) reveals that both of these changes will act to increase the system COP in the supplemental phase cooling mode. Equation (2.16) is based on the assumption that, although the ACES mechanical package is located indoors, motor heat losses from the package are vented to the outdoors during summer supplemental cooling operations. This venting of waste heat from system components is essential during summer space-cooling operations to prevent serious degradation of the supplemental phase cooling mode COP.

2.1.3 Ice-bin heat balance

Over the period of a year, the heat extracted from the ice bin to meet space-heating, water-heating, and supplemental cooling demands must be replaced by heat deposits from the collector panel, space cooling, and heat leakage into the ice bin from the surroundings. Furthermore, this ice-bin heat balance must be satisfied separately for both the ice phase and the supplemental phase of the annual cycle.

Ice phase

Using the previously described notation, the net monthly energy flow into or out of the ice storage bin can be written as:

$$q_{NET}(m) = q_{COL}(m) + q_L(m) + \alpha_I(C)q_C(m) - \alpha_I(H)q_{HT}(m) \ . \qquad (2.18)$$

The quantity $q_{NET}(m)$ represents the net bin heat-flow during any given month and can be either positive (net heat deposit) or negative (net heat withdrawal) depending upon the thermal demands of the house. The sum of $q_{NET}(m)$, however, taken over all of the months of ice phase operation, must be equal to zero. Thus the ice-bin heat balance condition over this period of time is expressed by

$$Q_{COL} + Q_L + \alpha_I(C)Q_C = \alpha_I(H)[Q_H + Q_{HW}] \ . \qquad (2.19)$$

In Eq. (2.19), Q_H, Q_{HW}, and Q_C represent the thermal demands of the house during the ice phase of operations. The ice-bin heat leakage, Q_L, is a function of the amount of insulation provided in the bin, the temperature difference between the inner and outer surfaces of the bin, and the heat-transfer areas of the ice bin surfaces. Then, the control variable for satisfying Eq. (2.19) is Q_{COL}, the panel heat collection, which must be varied to match the thermal demands of the house to the ice-bin thermal capacity.

Supplemental cooling phase

The net monthly energy flow into or out of the ice bin during the supplemental cooling phase of annual operations is expressed by

$$q_{NET}(m) = \alpha_S(C)q_C(m) + q_L(m) - \alpha_S(H)q_{HT}(m) - q_{BR}(m). \qquad (2.20)$$

Here, $q_{BR}(m)$ represents the amount of heat that must be removed from the bin each month to provide the needed supplemental cooling capacity. The amount of heat removal required is equal to the net heat deposits, so

that $q_{NET}(m) = 0$ for each month of supplemental phase operations. The sum of all the months of supplemental phase operation is expressed by

$$Q_{BR} = \alpha_S(C)Q_C + Q_L - \alpha_S(H)[Q_H + Q_{HW}] \ . \tag{2.21}$$

Q_H, Q_{HW}, and Q_C represent the thermal demands of the house during the supplemental phase of operation. Q_L is a function of the ice bin construction and the temperature of its external surroundings. The temperature at the inner surface of the ice bin is assumed to be 45°F during the supplemental phase of annual operation.

Ice-bin thermal capacity

The thermal storage capacity of the ice bin, which determines the amount of beneficial interseasonal energy transfer that can be effected with a given ACES design, is expressed by

$$\begin{aligned} TCAP = {} & PF \cdot \rho(I) \cdot V[144 + T_{MAX} - 32] \\ & + (1 - PF) \cdot \rho(W) \cdot V[T_{MAX} - 32] \ , \end{aligned} \tag{2.22}$$

where

TCAP = thermal capacity of bin, Btu;
PF = ice-packing fraction;
$\rho(I)$ = ice density, 57.0 lb/ft^3;
$\rho(W)$ = water density, 62.4 lb/ft^3;
V = ice storage bin wetted volume, ft^3;
T_{MAX} = maximum temperature of ice bin, 45°F.

The value of PF in Eq. (2.22) is 0.4 for an ice-maker type ACES and 0.8 for a brine-chiller type ACES.

For a full ACES, it is possible to select an ice bin size, V, that will result in either Q_{COL}, in Eq. (2.19), or Q_{BR}, in Eq. (2.21), becoming zero. In northern climates, where a surplus of winter ice is produced, the ice bin can be selected to have a thermal capacity great enough to

provide for all the summer cooling needs. In this case, the entire annual cycle operates in the ice phase, and panel heat collection is provided to melt excess ice formed during the heating season. In southern climates, the thermal capacity of the ice bin is selected to meet all of the bin heat-withdrawals without assistance from solar panel heat collection. Supplemental cooling, however, is required during the summer. For a partial ACES located in either northern or southern climates, both panel heat collection and supplemental cooling must be provided; that is, neither Q_{COL} nor Q_{BR} will be zero.

2.2 Basic Design of ACES

2.2.1 Design objectives

As in the case for conventional HVAC systems, the principal objective in ACES design is to match the capacity of the system to a known set of heating and cooling demands for a building for a specific reference weather condition. In ACES, the reference condition is an "average" weather year (design year) that yields building load demands for which only a 50% probability of being exceeded in any given year exists. The ACES is designed to meet these design-year loads and, additionally, is provided with a backup heating system for use in years having more severe weather.

Both ACES and conventional HVAC systems must be able to supply peak heating and cooling demands of a building. The ACES, in addition, must satisfy energy balances on the ice bin for both heating and cooling seasons. Satisfying the heating season energy balance may require the use of an ambient-heat collector to prevent possible energy deficits in the ice bin. A central task of ACES design is determining the collector size that is compatible with an arbitrarily selected ice bin volume and a given set of house heating demands. Similarly, if the selected ice bin has a thermal capacity that is less than the annual cooling load of the building, a secondary task of an ACES design is to estimate the amount of supplemental cooling needed and the additional consumption of electricity required to provide it.

The overall objective of the ACES design is to determine the component sizes and required performance characteristics for a least-cost system that is capable of satisfying the load demands imposed by the requirements for space heating, water heating, and space cooling of a particular building. Specific design parameters that must be determined and specified for any ACES application are discussed in the following section.

2.2.2 Design parameters

Detailed methods for calculating ACES component sizes are discussed in Sect. 4. Specific areas that will need to be addressed for component size determination are described briefly below.

Ice bin

The owner or builder can choose any arbitrary volume for the ice bin that lies within the range suitable for minimum and full ACES. The physical dimensions of the bin, the thermal resistance of insulation in its walls, floor, and lid, and the extent to which it is to be located below-grade must then be selected. The thermal capacity of the bin is then calculated using Eq. (2.22).

Heat pump and ice-bin heat exchanger

The heat pump must have a capacity rating equal to or slightly larger than the design hourly heat loss of the building. The heat pump may be either a brine-chiller or a plate-type ice maker. If a brine-chiller heat pump is selected, design specifications must also be determined for the ancillary ice-bin heat exchanger. These specifications include the material, length, diameter, and spacing of the heat-exchanger tubing. Calculations must be performed to assure that the heat exchanger meets bin volume constraints and that its heat transfer rate satisfies the design-day load of the building.

Environmental energy collection

The source and availability of the energy to be collected must be specified. If a solar/convector panel is chosen, calculations must be performed to determine the minimum panel area capable of delivering heat to the ice bin at rates necessary to prevent premature bin freeze-up. The monthly energy collection capacity (in MBtu/ft^2), $q_{COL}(m)$, of the specific panel type selected must be calculated.

Waste-heat rejector

The type, size, and heat-rejection capacity of the unit selected must be specified. The rejector may be either a radiant/convector panel or an outside air coil. Design calculations must be performed to match the heat-rejection capacity of a panel heat-rejector to the air-conditioning requirements of the building. An outdoor air coil is an integral part of the ACES heat pump mechanical package and, therefore, will normally be designed by the manufacturer.

Annual energy consumption

The design calculations should provide an estimate of the amount of electricity that a system will consume annually in meeting the design-year space-heating, water-heating, and space-cooling demands of the building. The annual COP of the ACES, defined as the ratio of useful heating and cooling delivered to the electrical energy consumed by the system, can then be calculated.

System cost analysis

The ACES design calculations should provide estimates of initial costs, installed costs, maintenance costs, and operating costs, which can then be compared to the economics of alternative HVAC systems. Present worth analysis is recommended for computing a total system cost, including annual expenditures for electricity over a 20-year system lifetime, because it furnishes a fair basis for comparing ACES with other systems. The discount rate and the escalation rate of electricity prices employed in the present worth analysis must be specified.

2.2.3 Alternative designs

Several alternative ACES designs have been investigated and found to be technically feasible. At the present time, however, it is not possible to determine which of these designs will prove to be the most economical for residential applications. Possible variations in ACES design range from relatively minor differences in the design and construction of components, such as the ice bin, the waste-heat rejector, or the ambient-heat collector, to more fundamental differences in the system concept. Examples of the latter type of design variations are: (1) providing the heat pump with a split evaporator that can extract heat either from the ice storage bin or from the outside ambient air and (2) selecting an ice-maker rather than a brine-chiller heat pump as the energy-mover of the system. The split-evaporator concept is still only in an early stage of development and will not be discussed further here. The selection of an ice-maker heat pump simplifies some design problems and complicates others and fails to show an economic advantage over the brine-chiller system.

The primary advantage of an ice-maker heat pump is that it eliminates the need for an ice-bin heat exchanger. The ice forms as water flows down over the ice-maker plates and is harvested at intervals by partial thawing, falling directly into the bin. Unfortunately, the flaky nature of the sheet ice reduces the storage-packing fraction so that a larger bin volume is required for a given thermal capacity [refer to Eq. (2.22)]. It is still uncertain whether the cost savings obtained by eliminating the ice-bin heat exchanger will compensate for the increased cost of the larger bin.

Elimination of the ice-bin heat exchanger requires the design of an alternative method of transferring heat from the energy collector panel to the ice bin. In the brine-chiller system, this heat transfer is accomplished by circulating brine between the collector panel and ice-bin heat exchanger. If, instead, cold water is circulated between the collector panel and the storage bin, the system must be designed to protect the collector panel against damage by freezing. An automatic drain-out system for the collector panel of an ice-maker ACES must be foolproof; not a

single failure over the 20- to 30-year lifetime of the ACES can be tolerated.

Although the ice-maker ACES appears promising because of its simpler design, its use in residential applications is not recommended at the present time. Additional research, development, and demonstration of the concept are needed. In contrast, the reliability and performance of the brine-chiller ACES have been demonstrated over extended periods of time at several test sites. Some startup problems were encountered, but these were corrected by minor design changes. Since then the systems have given reliable and essentially trouble-free service. The brine-chiller ACES, the more proven of the two systems, is the recommended system for use in single-family residences. Figure 2.3 is an artist's concept of an ice-maker ACES for a single-family residence; Fig. 2.4 is an artist's concept of a brine-chiller ACES for a single-family residence.

2.3 System Components

2.3.1 Primary components

The primary components of an ACES can be subgrouped by function into three systems: (1) the mechanical package, (2) energy collection and storage, and (3) energy delivery. The mechanical package is made up of the heat pump and ancillary equipment together with their associated components. These compact packages are expected to become commercially available eventually. The main components of an ACES are listed below:

1. ACES mechanical package

   Compressor
   Hot water desuperheater
   Hot water condenser
   Space-heating condenser
   Evaporator
   Accumulator
   Control logic package
   Air coil heat-rejector

2. Energy collection and storage

   Insulated, covered ice storage bin
   Ice-bin heat exchanger (for a brine-chiller ACES)
   Environmental energy collector
   Collector drain-out facility (for an ice-maker ACES)

ORNL-DWG 77-21029

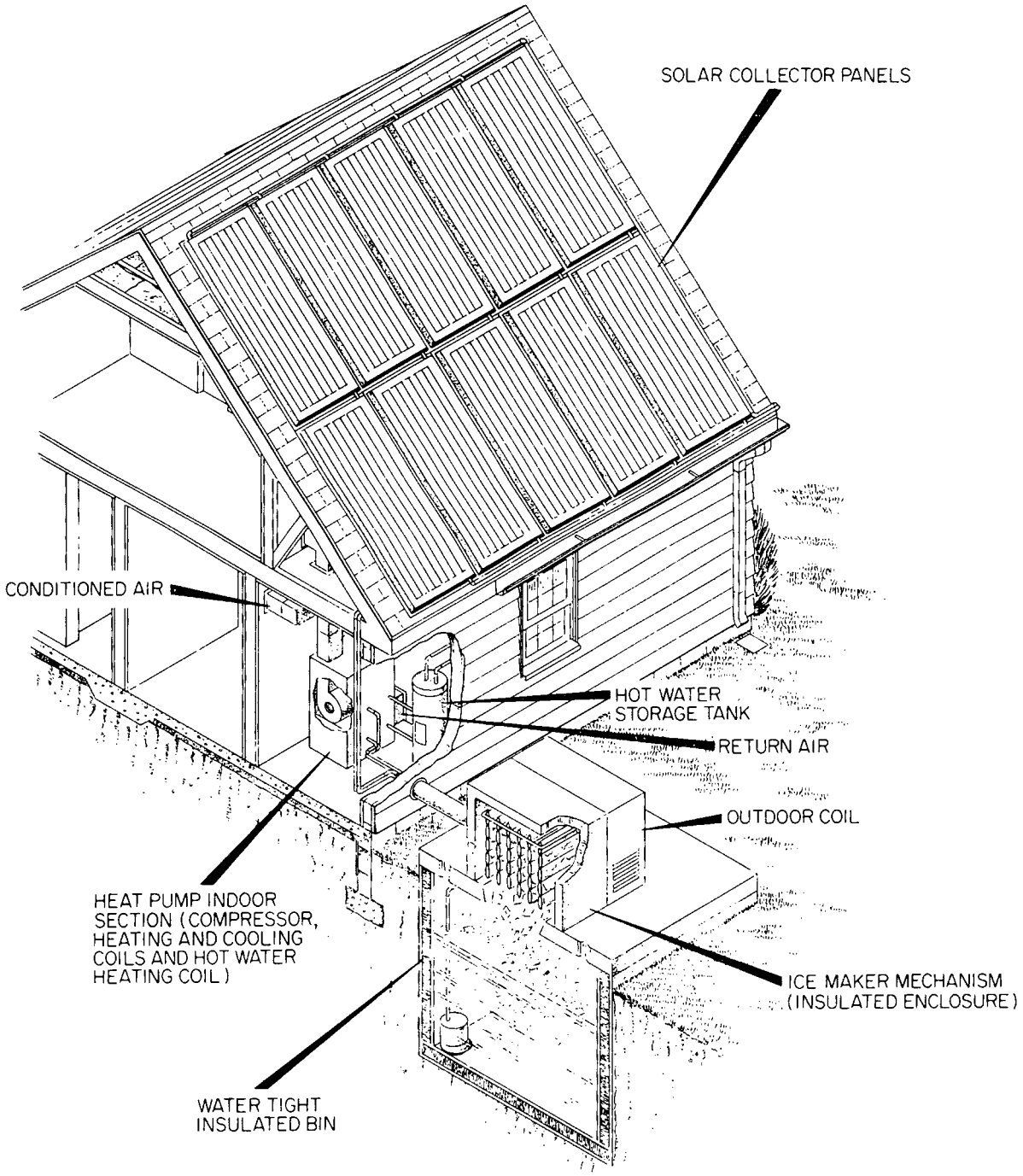

Fig. 2.3. Artist's concept of an ice-maker ACES for residences.

ORNL-DWG 79-16637

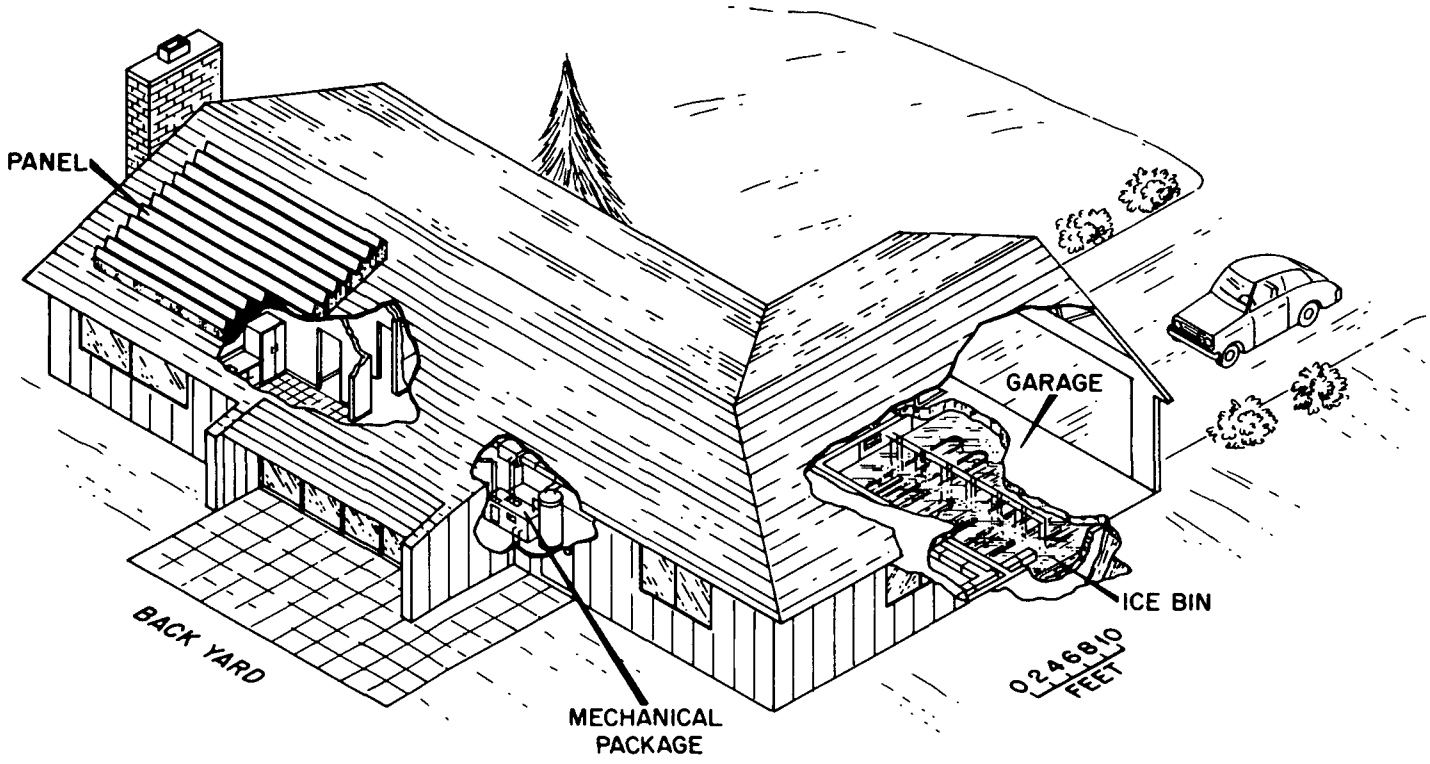

Fig. 2.4. Artist's concept of a brine-chiller ACES for a residence.

3. Energy delivery

   Indoor air coil
   Fan coil motor and air circulator
   Hot water storage tank
   Brine or water pumps.

2.3.2 Auxiliary components

All ACES designs should include a backup space-heating system for use during those years having colder than average weather. A simple method of providing backup heating capability is to install electric resistance heaters in the air ducts of the building. The heaters should have a heating capacity equal to the design-day heat loss of the building and should be thermostatically controlled and operable by a manual switch. Other auxiliary components of an ACES include the piping, valving, and wiring needed to connect the primary components of the system, and such conventional HVAC system equipment as air ducts, thermostats, etc.

2.4 System Layout and Operating Modes

Layout and operation of a brine-chiller ACES are discussed in this section. Basically, the system includes (1) a closed refrigerant circuit for transferring heat from the evaporator to circuits for space heating, water heating, or for disposal to the ambient air; (2) closed brine circuits, containing a solution of methanol in water, which thermally couple the low-temperature side of the refrigerant circuit to the ice bin and the high-temperature side of the circuit to the heat delivery systems; and (3) an open fresh-water circuit in which heat is extracted from the hot refrigerant to produce hot water. By appropriate valving arrangements, brine flow paths can be established, as needed, to yield: (1) hot water production, (2) space heating and water heating, (3) night waste-heat rejection, (4) space cooling, and (5) environmental energy collection for melting excess ice. In the first three of these operating modes, the refrigerant cycle transfers heat from a low-temperature source to a higher temperature delivery point.

2.4.1 Refrigerant circuit

The refrigerant circuit of the ACES is of conventional design and is made up of a compressor, an evaporator, a desuperheater, a condenser, and a liquid-refrigerant subcooler. The evaporator, desuperheater, and condenser serve to transfer thermal energy between the refrigerant and the intermediate brine circuits. The function of the refrigerant cycle is to extract heat from the low-temperature brine, which passes through the ice-bin heat exchanger, and deliver it to the high-temperature brine circuit for space or water heating. Because the heat pump mechanical package will be factory assembled, the ACES designer is not required to be familiar with the details of the refrigerant cycle. A short, qualitative description of the refrigerant cycle is provided here for the interested reader.

Refrigerant cycle

The refrigerant leaves the evaporator as a low-pressure, low-temperature, saturated vapor and flows through the liquid subcooler, where it absorbs heat from hot, liquid refrigerant to become a low-temperature, slightly superheated vapor. In this form, the refrigerant then enters the compressor where it is compressed into a high-pressure, superheated gas. The superheated gas leaves the compressor and enters the desuperheater, where it gives up heat to the fresh-water circuit to produce hot water. After leaving the desuperheater as a high-temperature gas, the refrigerant flows through the hot water and space-heating condensers and gives up additional heat to the brine circuit.

The refrigerant emerges from the condenser as a high-pressure, medium-temperature, saturated liquid, which then flows through the liquid subcooler. As a subcooled liquid, the refrigerant flows through an expansion valve and expands to become a low-pressure, low-temperature, boiling liquid. As such, it absorbs heat from the brine surrounding the evaporator and evaporates to become a low-temperature, saturated vapor. At this point, it enters the liquid subcooler and flows to the compressor to begin another cycle. The net effect of the refrigerant cycle is that heat is pumped from the low-temperature ice bin and delivered, at higher temperatures, to be used for heating.

2.4.2 Water heating

Operation of the ACES to provide space heating will also automatically produce hot water when needed. However, to supply summer demands for hot water, the system must also be capable of operating in a water-heating-only mode. Figure 2.5 illustrates operation in the water-heating mode. The compressor, the fresh-water circuit pump, and the cold brine pump, which circulates brine to the evaporator, are all operating. The hot brine pump is off, so that the heating condenser is inactive. The refrigerant cycle extracts heat from the ice bin via the cold brine circuit and delivers it, at higher temperatures, to the desuperheater and the hot water condenser. There, heat is transferred to the fresh-water circuit to provide hot water. The ice that is generated as a by-product during this mode of operation is stored to meet future space-cooling needs.

2.4.3 Space heating and water heating

The ACES mode of operation to meet space-heating and water-heating demands simultaneously is depicted in Fig. 2.6. Components in operation during this mode are: the cold brine, hot brine, and fresh-water pumps; the air-coil fan motor; and the compressor. The only idle component in the refrigerant circuit is the hot water condenser. Heat is extracted from the ice bin by the evaporator and delivered, at higher temperatures, to the fresh-water circuit for water heating and to the brine circuit for space heating. The ice that is formed in the ice bin is saved for use in meeting future space-cooling needs.

2.4.4 Night heat rejection

Supplemental air conditioning in the summer is provided by running the compressor at night to extract heat from the ice bin (Fig. 2.7). In this manner, chilled water or ice can be produced in the ice bin after the winter-formed ice has been exhausted. Depending upon the immediate need for water heating, the heat extracted from the ice bin is either delivered to the hot water circuit or rejected to the outdoor night air as waste heat. In Fig. 2.7, the solar/convector panel serves dual functions as the environmental energy collector in the winter and as the waste-heat

ORNL-DWG 78-9377R

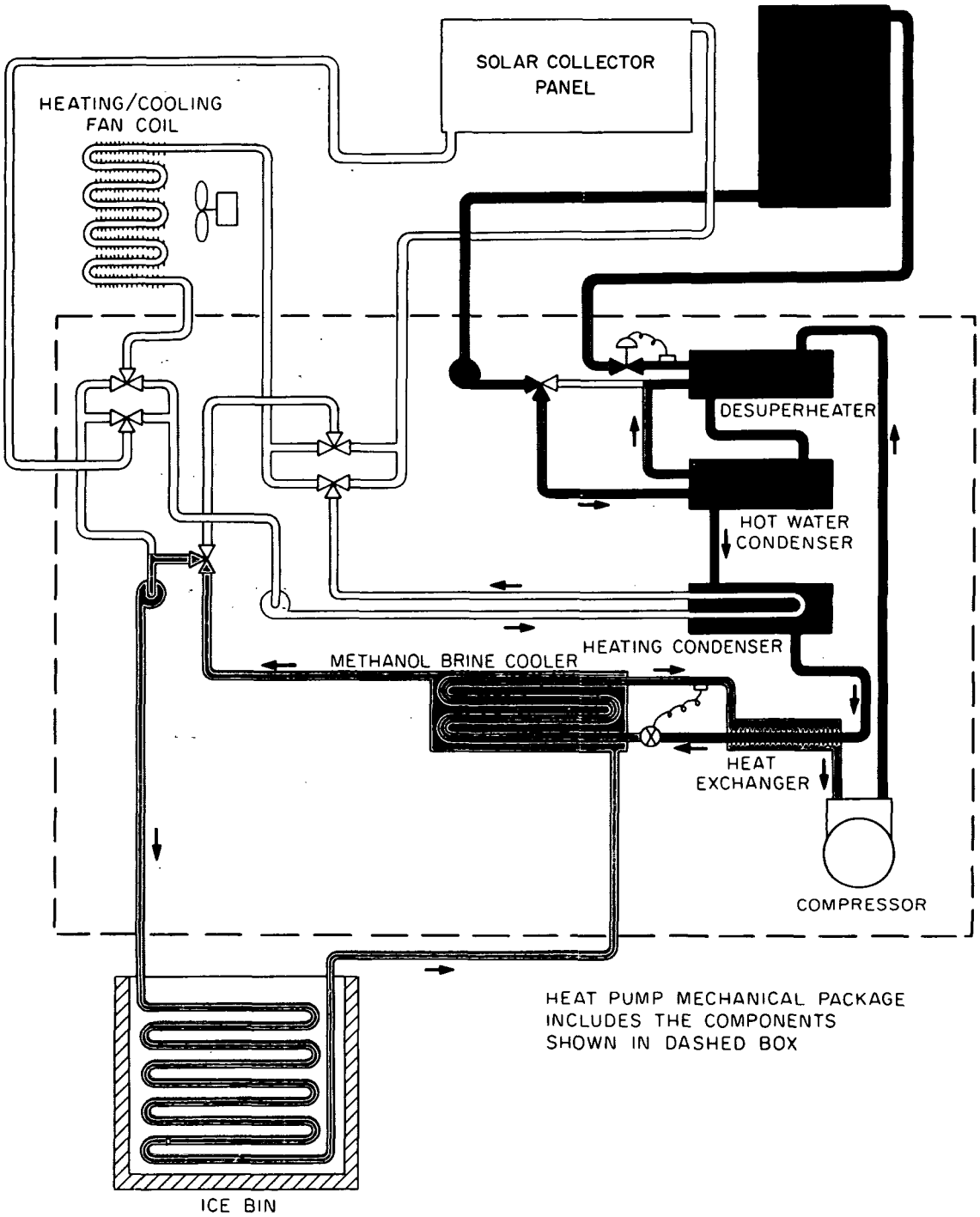

Fig. 2.5. Schematic of water-heating mode.

ORNL-DWG 78-9380R

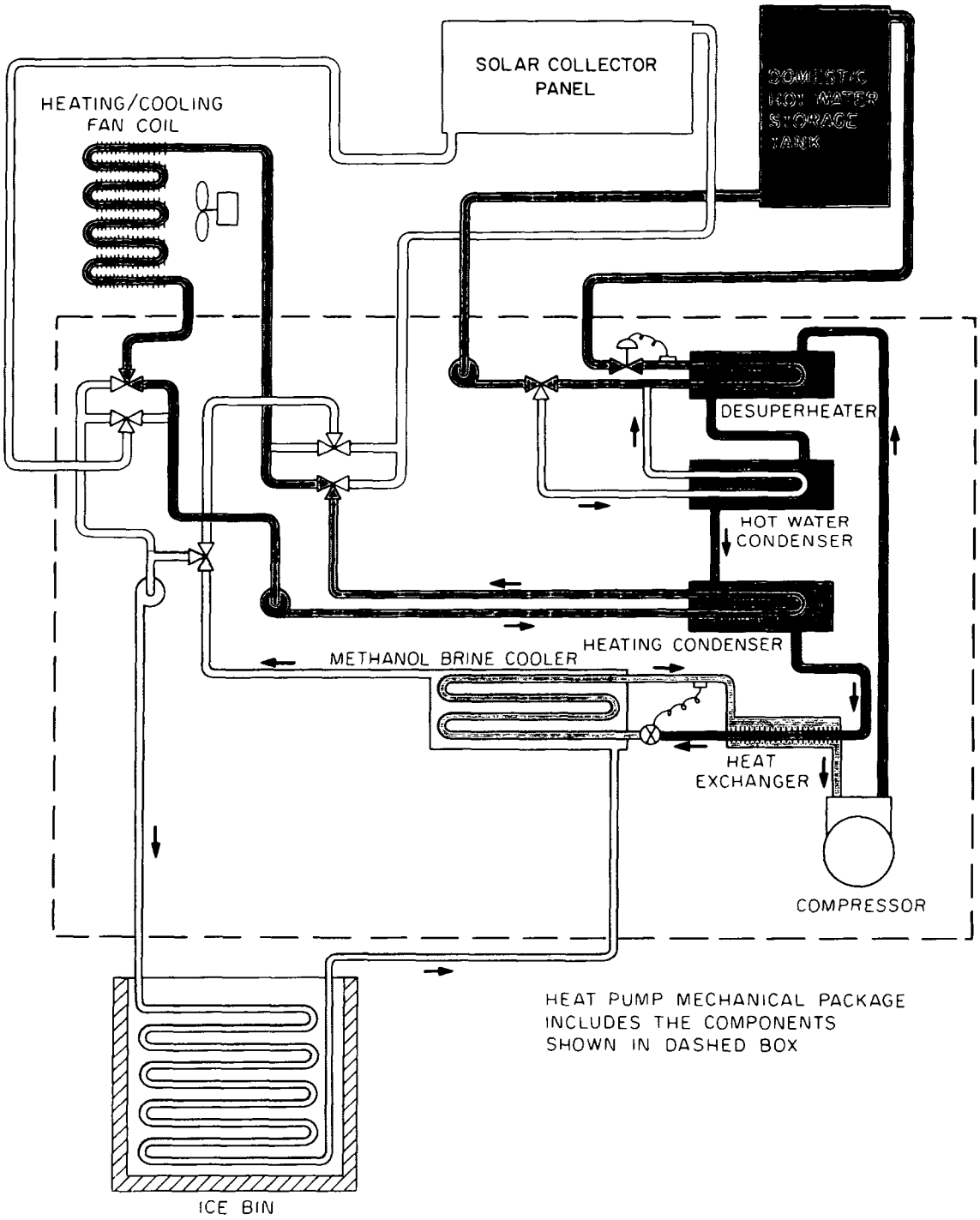

Fig. 2.6. Schematic of space- and water-heating mode.

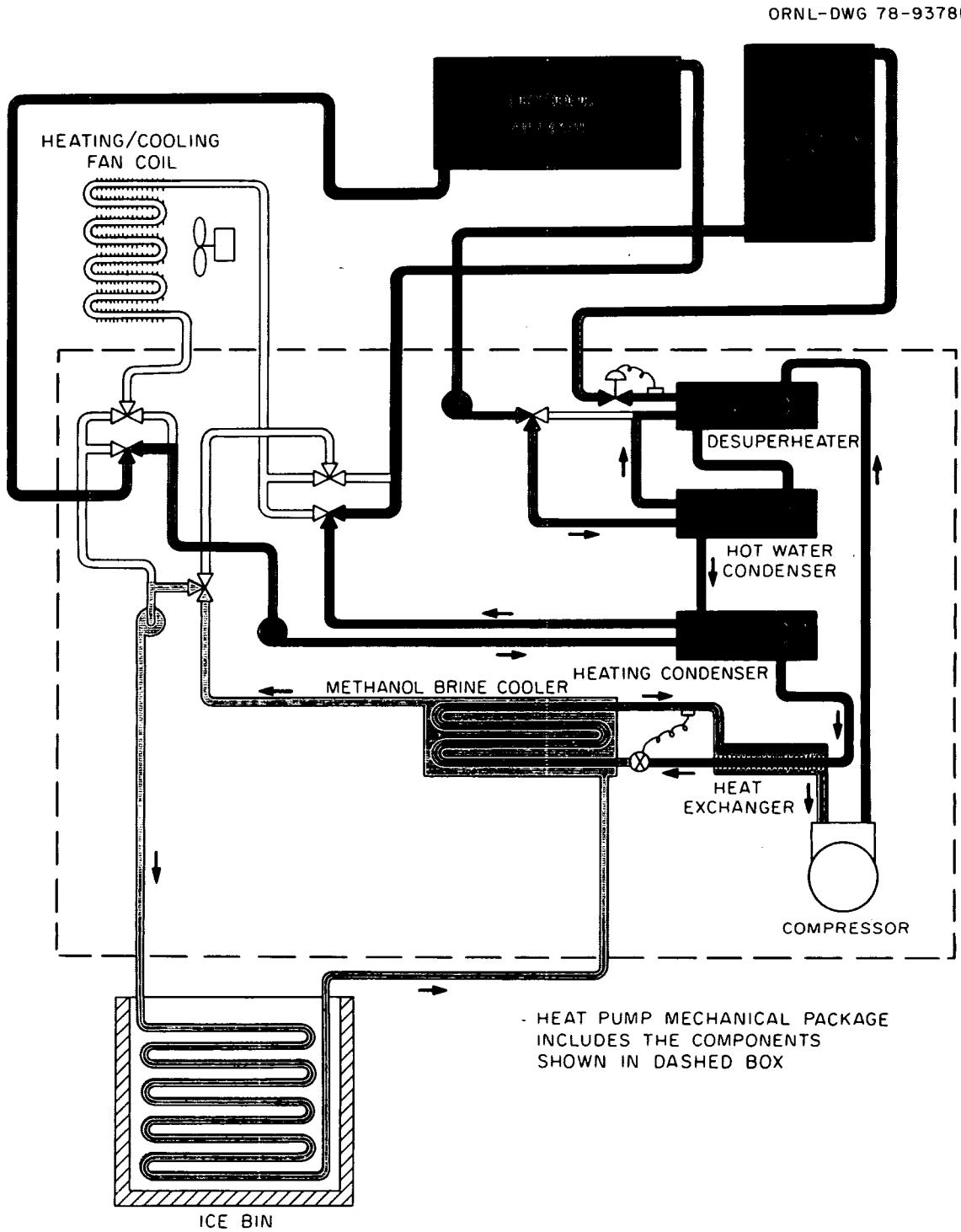

Fig. 2.7. Schematic of ice-bin heat-rejection mode.

rejector in the summer. However, use of an outside air coil is generally considered the preferred method of heat rejection. The night heat rejection mode requires that the compressor and all brine and water pumps be in operation.

2.4.5 Space cooling

The simplest primary mode of ACES operation is that of space cooling, shown in Fig. 2.8. The building is provided with air conditioning by circulating chilled brine from the ice-bin heat exchanger through the indoor air fan coil. The heat extracted from the building elevates the brine temperature and gradually melts the ice stored in the bin. The only electrical components in operation during this mode are the air coil fan and the chilled-brine pump.

2.4.6 Environmental energy collection

During the winter the melting of excess ice is accomplished by circulating brine from the ice-bin heat exchanger through an outdoor energy-collector panel. The collector panel collects radiant and convective energy from the environment if the ambient air temperature exceeds 32°F. The heat collected raises the brine temperature above 32°F and, as the brine is recirculated to the ice-bin heat exchanger, causes some of the ice in the bin to melt. The only electrical component used during the heat-collection mode of operation, shown in Fig. 2.9, is the chilled-brine pump.

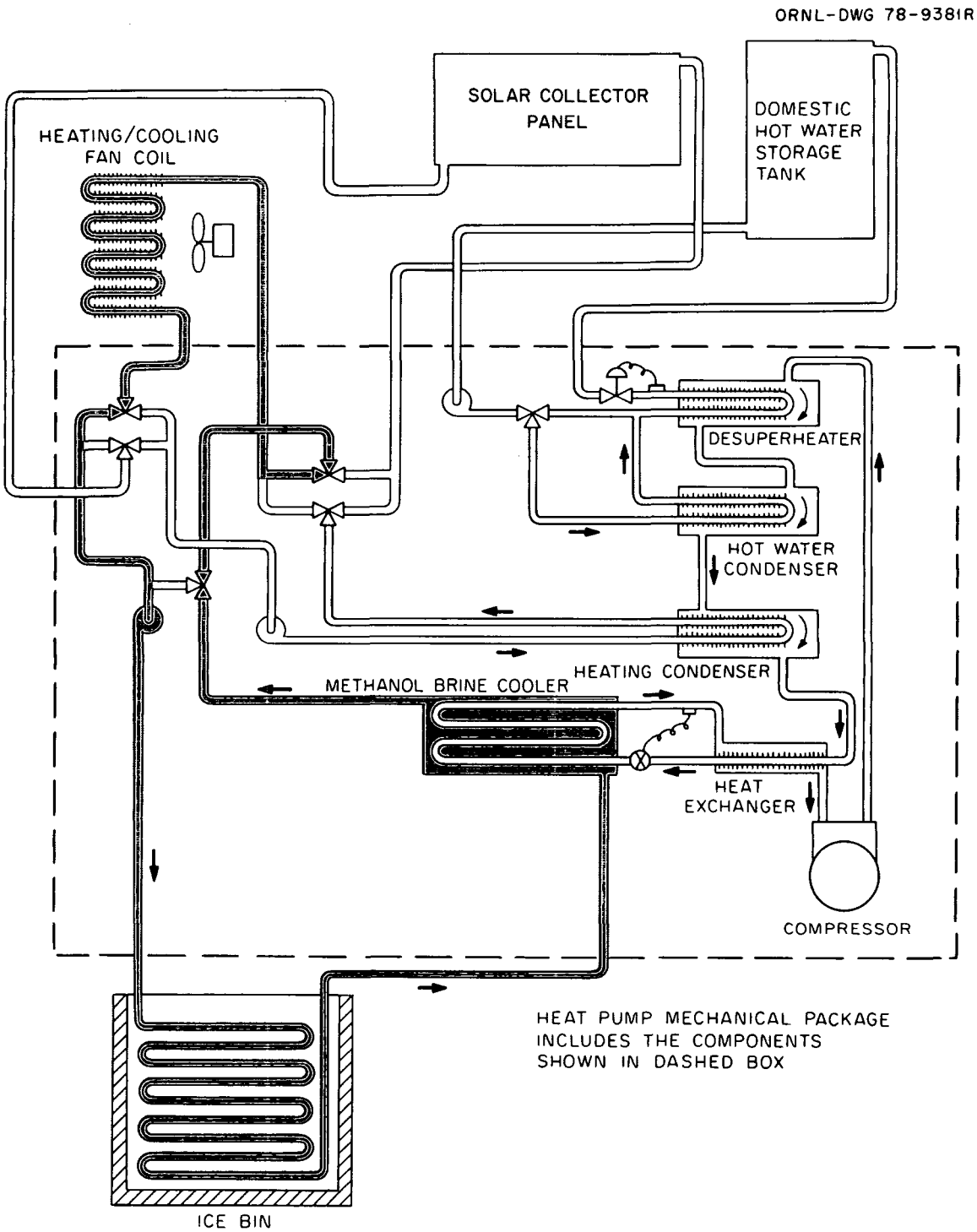

Fig. 2.8. Schematic of space-cooling mode.

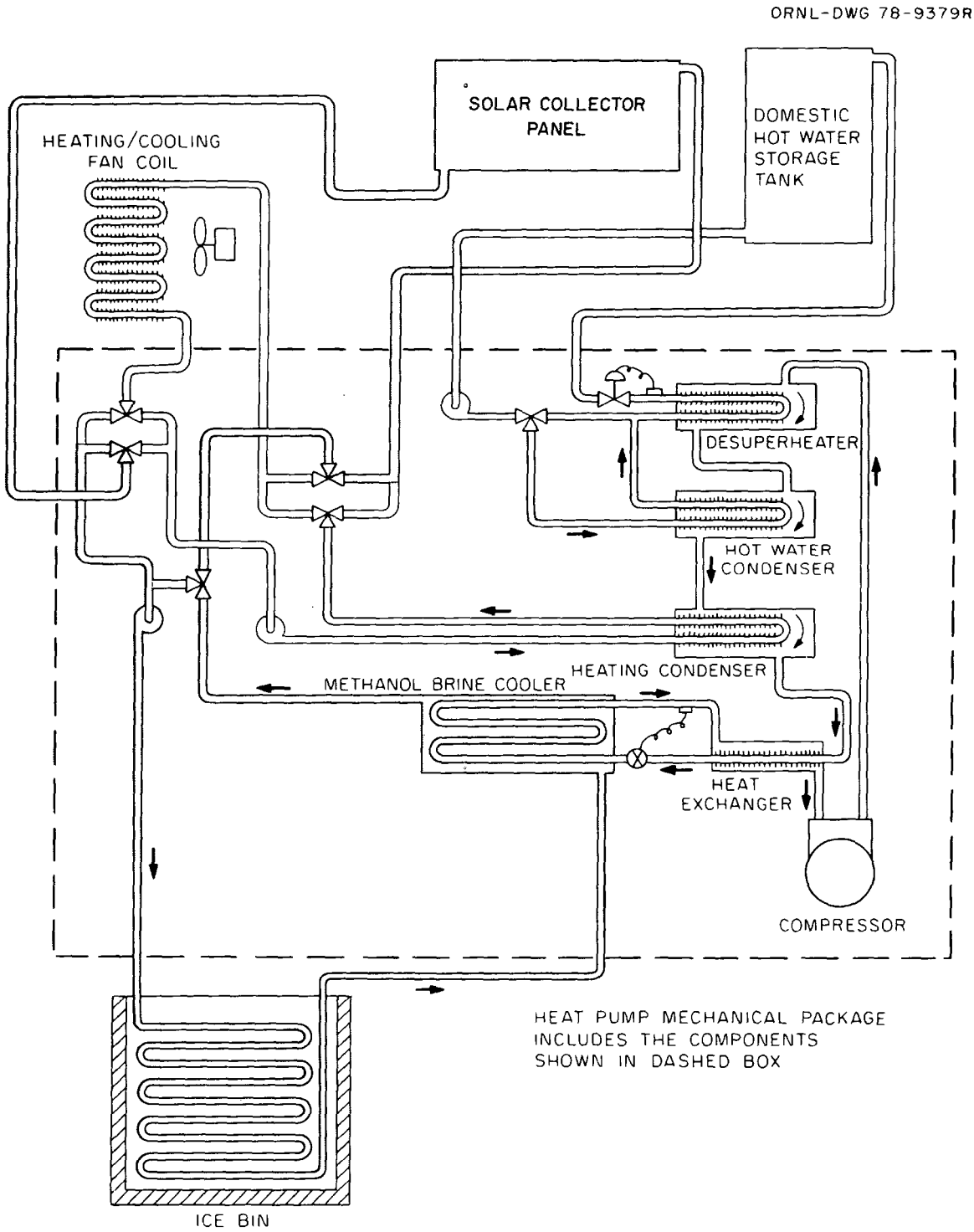

Fig. 2.9. Schematic of collector panel operation.

3. THERMAL LOADS OF THE BUILDING

The ACES is sized to supply the design hourly heating load of the particular building and to meet the building's monthly demands for space heating, water heating, and air conditioning. The thermal loads of the building depend upon the design and construction of the building, the climate, and the living habits of the occupants. Because many variables affecting the energy needs of the building are unknown (e.g., life-style of the occupants, rate of infiltration of outside air into the building, etc.) an accurate calculation of monthly heating and cooling requirements is difficult. Indeed, the calculation of monthly heating and cooling loads for an actual building is an art that requires considerable skill, experience, and good judgment. For these reasons, empirically determined space-heating and air-conditioning loads, when available, are preferable to calculated thermal loads for use in ACES design analysis.

3.1 Design Hourly Loads

3.1.1 Heating load

Calculation of the design hourly heating load of the building must precede selection of the capacity rating (size) of the heat pump. The design hourly load represents the rate at which heat must be supplied to the building to maintain a desired indoor temperature on a cold, sunless winter day. The design hourly heating load is, therefore, equal to the rate of heat loss of the building under design-day conditions. The design hourly heating load depends upon the airtightness of the building and upon the amount of thermal insulation provided in its exposed surface (walls, windows, floors, and ceilings). Calculation of the design hourly heating load requires detailed knowledge of the construction of the building and the design-day temperature of the particular location. The design hourly heating load may be calculated using any conventional method[1] or by using work form 2 and the accompanying instructions provided in Sect. 8.

3.1.2 Cooling load

The design hourly cooling load is the rate at which heat must be removed from the building to maintain the room air temperature at a desired constant value under summer design-day conditions. The cooling load consists of sensible heat gains resulting from solar radiation, internal heat sources, air infiltration, heat conduction into the house through the building's thermal envelope, and latent heat gains resulting from increases in the moisture content of the air in the building.

Normally, detailed calculation of the design hourly cooling load is not required in ACES design because the heat pump that is selected to supply the design hourly heating load will also be capable of supplying the design hourly cooling load. The design of rate-dependent cooling components in an ACES mechanical package will be done by the manufacturer. Only in the case of summer load-management systems with ice storage (not treated in this report) must additional attention be directed to the selection of air-coil and heat-transfer capability and mechanical refrigeration capacity.

3.2 Design Monthly Loads

The monthly demands of the building for space heating, water heating, and space cooling should be determined empirically, if possible, using metered fuel-consumption data. If such data are unavailable, the building loads should be estimated by the best calculational method available. Computer programs that require input of hourly weather and detailed building design data are generally too time consuming and too expensive for use in calculating monthly thermal loads of residences. As an alternative, this report describes a technique for interpolating between the thermal loads calculated for a set of reference houses using temperature bins and average solar data.[2,3] This interpolation technique, described in Sect. 8.3, is considered sufficiently accurate for estimating the monthly thermal loads of a building that are needed in ACES design analysis. The basis of the temperature-bin method of load determination is described in the Appendix. Tabulations of monthly loads

computed by this method for the four reference houses in each of the 111 cities are provided in the Appendix, also.

3.2.1 Space-heating loads

The monthly space-heating demands of a building may be obtained from empirical data, calculated by computer loads programs, or estimated by the interpolation technique described in Sect. 8.3. Regardless of the method used, the ACES designer should inspect carefully the estimated monthly heating loads to judge whether they are realistic. Even if the estimated loads are judged to be realistic, the ACES designer may adjust the heating-load estimates to make them more representative of an average weather year or to take into account differences in life-styles of prospective occupants of the building. The ACES design procedures described in Sect. 8 will enable builders to design the system to deliver whatever monthly heating loads are selected.

Empirical monthly heating loads

Monthly heating loads inferred from empirical data are preferable to calculated loads because they incorporate actual occupant life-styles and "as built" properties of the house. Although actual measurement of the monthly heating loads of a residence is impractical, these loads may be estimated from fuel-consumption data. For example, if the owner of a building for which a retrofit ACES is being considered has kept yearly records of monthly fuel consumption by the present heating plant, the monthly heating needs of the building can be estimated using a known (or assumed) efficiency value of the heating plant. For new houses in which fuel-consumption data are lacking, heating loads can be inferred from fuel-consumption data of similar houses that have been built locally.

Loads computer programs

In some instances it may be necessary to calculate the monthly space-heating demands of a residence by using a computer program. The use of a loads computer program, such as the one described by Kusuda[4] for

estimating monthly heating loads, may be advisable if the planned building has unusual design features. Features that would require the use of a computer program include: (1) an exceptionally sheltered or exposed building site, (2) an unusually large south-facing glass exposure, (3) a house location partly or completely underground, (4) an exceptional amount of thermal insulation, or (5) use of an air infiltration control system. In such cases all internal and external heat gains must be calculated and explicitly taken into account in estimating the monthly heating loads. This complex task is best performed by using a tested, comprehensive loads computer program.

Heating-loads interpolation

Table B.2 of the Appendix lists the monthly space-heating loads of four reference houses in each of 111 geographical locations across the United States. These values were calculated by the temperature bin method. A description of the reference houses in each geographical location is given in Table A.2 of the Appendix. An ACES designer, lacking both empirical data for estimating the monthly heating loads of a particular building and access to computer facilities, may estimate monthly demands for space-heating by using the interpolation technique described in Sect. 8 of this report. Section 8 also provides a sample work form 3 for recording the estimated monthly space-heating loads (obtained by any of the above methods) and discusses considerations for modifying them to obtain the final space-heating loads to be used in the ACES design.

3.2.2 Space-cooling loads

The monthly space-cooling loads of a building depend upon numerous variables that change in time and in phase with respect to one another. These cooling-load variables include: solar heat gains, internal heat sources, air infiltration rates, shell losses or gains by conduction, and air humidity ratios inside and outside the building. The complex interaction of these variables makes the computation of monthly cooling

loads very difficult. Even the use of large computers does not ensure accurate estimates because many of the variables affecting monthly cooling loads are either poorly defined or difficult to quantify. Whenever possible, the monthly cooling loads should be inferred from the monthly power-consumption data for air-conditioning the building, or similar buildings in the locality.

If empirical data on the monthly space-cooling needs of a particular building are lacking and access to computer facilities is not available, the ACES designer may elect to estimate space-cooling demands using the interpolation technique described in Sect. 8. If this method is used, the designer should further determine whether the results should be modified to take factors into account that could affect the space-cooling loads. These factors include: an unusual type of house construction, site peculiarities, orientation of the building, and life-style of the occupants. Regardless of the estimation method used, the monthly space-cooling loads should be recorded in work form 3 and carefully evaluated as to whether they represent average-year weather conditions and are reasonable with respect to local air-conditioning experience. The monthly space-cooling loads finally selected in work form 3 will be used in the ACES design analysis.

3.2.3 Water heating loads

The monthly quantity of heat required for the production of domestic hot water is expressed as:

$$q_{HW} = [L + 0.348G(T_{HW} - T_{CW})] \cdot h(m) \ , \qquad (3.1)$$

where the constant 0.348 is a factor for converting gallons of hot water per day to Btu/h/°F, and

$q_{HW}(m)$ = heat required for hot water production in month m, Btu;
L = standby heat loss from the hot water storage tank, Btu/h;
G = hot water consumption rate, gal/d;
T_{HW} = hot water storage temperature, °F;
T_{CW} = cold water inlet temperature, °F;
$h(m)$ = number of hours in month m, h.

The hot water storage temperature for the ACES is 120°F and the cold water inlet temperature is assumed to be the average monthly ground temperature at a depth just below the frost line. (A method for estimating ground temperatures as a function of depth, time of year, and geographical location is described in Sect. 3.3.) The standby heat loss from a typical residential hot water tank is assumed to be 150 Btu/h. The consumption of hot water varies with life-style, but for most families is equal to about 20 gpd for an adult and 15 gpd for a child.

The monthly water-heating loads for a typical family of four, two adults and two children, have been calculated using Eq. (3.1) and the parameters given. These monthly water-heating loads are listed in Table B.2 for the various geographical locations of the reference houses. The listed water-heating loads may be used directly or they may be adjusted for hot water consumption rate, G, if desired. The monthly water-heating loads finally selected and recorded in work form 3 (Sect. 8) will form the basis of the ACES design.

3.3 Calculation of Ground Temperatures

In designing an ACES, the ability to estimate ground temperatures as a function of depth and time of year for various locations is important. Knowledge of the ground temperature is required for calculating the space-heating and -cooling loads of the building (floor heat flows), for estimating the inlet water temperature to the hot-water storage tank, and for determining the ice-bin heat leakage coefficients. In general, ground temperatures at a specific site can be obtained only by direct measurements because of the influence of local weather conditions, groundwater flows, earth surface conditions, and soil properties. Nevertheless, estimation of expected average ground temperatures for broad regions of the country is useful.

The method of estimating earth temperatures used in this report is based on relationships of earth temperature oscillations and soil thermal-diffusivity that were originally developed by Lord Kelvin in 1811. Recently, Kusuda and Achenbach[5] have shown that statistical data on annual temperature cycles of outdoor air can be used in the Kelvin

relationship to predict ground temperatures with reasonable accuracy. The statistical parameters required for estimating soil temperatures at a given location are: annual average air temperature, amplitude of the annual cycle of monthly average outdoor air temperatures, and phase angle of the earth temperature cycle. In this report, these parameters, denoted by A_o, B_o, and P_o, respectively, are derived from the outdoor air temperature bin data[2] and are listed in Table B.2 of the Appendix.

Using these annual temperature-cycle parameters, the ground temperatures at various depths and at various times of the year are calculated by the expression:

$$TG(t,x) = A_o - B_o \cdot e^{-\sqrt{\pi/Dt}\,x} \cos\left(\frac{2\pi t}{T} - \sqrt{\frac{\pi}{DT}}\,x - P_o\right), \qquad (3.2)$$

where

$TG(t,x)$ = ground temperature at time t and depth x, °F;
x = downward distance from the earth's surface, ft;
t = elapsed time from January 1, h;
T = period of the temperature cycle, equal to 8766 h;
D = thermal diffusivity of the soil or earth, ft^2/h.

The thermal diffusivity of soil (D) depends upon soil composition and moisture content. Average values of D, in ft^2/h, that may be used in Eq. (3.2) for calculating ground temperatures are: 0.010 for dry soils, 0.025 for average soils, and 0.050 for wet soils.

3.4 Bin Heat-Leakage Coefficients

Ice bin heat-leakage coefficients are calculated by assuming that the thermal driving force for heat flow across the walls of the bin is the difference between the temperature calculated for soil and the 32°F interior of the ice storage bin. This assumption implies that the magnitude of heat flow to the bin is limited primarily by the level of bin insulation. The heat-leakage coefficients ($MBtu/ft^2$) are then expressed by:

$$TB(m) = \left[\frac{TG(\gamma_m, x_T) - 32}{R} + \frac{TG(\gamma_m, x_B) - 32}{R}\right]\frac{H(m)}{1000} \tag{3.3}$$

and

$$SD(m) = \left[\frac{TG(\gamma_m, x_S) - 32}{R}\right]\frac{H(m)}{1000} \; . \tag{3.4}$$

Here,

$TB(m)$ = monthly heat flow through the top and bottom of the ice bin, $MBtu/ft^2$;

$SD(m)$ = monthly heat flow through the sides of the ice bin, Btu/ft^2;

γ_m = time elapsed from January 1 to the end of each month, h;

$H(m)$ = total number of hours in month m;

R = thermal resistance of the insulated bin surfaces;

x_T, x_B, and x_S = depths into the earth of the midpoints of the bin top, bottom, and sides, respectively.

The definitions of TB(m) and SD(m) show that a positive value for the coefficient denotes heat flow from the ground into the storage bin, whereas a negative value denotes heat flow out of the storage bin.

REFERENCES

1. National Environmental Systems Contractors Association (NESCA), *Manual J, Load Calculation for Residential Winter and Summer Air Conditioning*, 1975.

2. U.S. Air Force, *Engineering Weather Data*, AFM 88-29, July 1978.

3. B. Y. Liu and R. C. Jordan, "The Long-Term Average Performance of Flat-Plate Solar Energy Collectors," *Solar Energy* 7(2): 53-74 (1963).

4. T. Kusuda, *NBSLD: The Computer Program for Heating and Cooling Loads in Buildings*, NBS Building Science Series 69, July 1976.

5. T. Kusuda and P. R. Achenbach, "Earth Temperature and Thermal Diffusivity at Selected Stations in the United States, Part 1," *ASHRAE Transactions* 71: 61-75 (1965).

4. EQUIPMENT SELECTION AND DESIGN

This section describes theoretical considerations for determining the sizes of ACES components to supply the given set of monthly thermal loads that have been chosen for a building, using the methods described in the preceding section. Because the ACES can be designed to supply any set of monthly thermal loads, it is important to estimate reasonable loads for the building to ensure that the capacity of the system is neither over- nor under-rated.

The principal design criteria of an ACES are (1) the system must be able to deliver heat at a stated maximum rate of output and (2) the system must be able to deliver the design monthly energy needs of the building while satisfying energy balances on the ice bin during both the ice phase and the supplemental phase of the annual cycle. The first criterion is set by the design hourly heat loss from the building, which determines the capacity of the heat pump that must be selected and the required surface area of the ice-bin heat exchanger. The second criterion stipulates that some ambient heat must be delivered to the ice bin from atmospheric or ground heat sources and/or that some heat must be removed from the ice bin by operation of the heat pump during the summertime.

4.1 Heat Pump Mechanical Package

In this report we assume that the market for residential ACES applications in the United States will develop and that heat pump mechanical packages, designed and assembled at the factory, will become commercially available as a result. The ACES designer will be able to select, from among models manufactured, a package that will meet the particular needs of his ACES. Table 4.1 lists capacity ratings and operating characteristics for four heat pump mechanical packages that represent the types of high-performance heat pumps that could be built today with existing technology. The use of Table 4.1, or similar listings of specifications provided by manufacturers, to design an ACES for a single-family residence is described in the following sections.

Table 4.1. Example listing of the capacity ratings of heat pump mechanical packages

Model number	HP 1	HP 2	HP 3	HP 4
Heat pump				
Heating mode operation[a]				
Heating output, Btu/h	30,000	45,000	60,000	75,000
Compressor electrical draw, kW	2.931	4.548	6.280	7.327
Compressor-only heating COP	3.0	2.9	2.8	3.0
Evaporator rating, Btu/h	21,180	31,150	41,250	50,800
Compressor-only cooling COP	2.12	2.01	1.95	2.03
Desuperheater rating at 120°F, Btu/h	6,000	9,000	12,000	15,000
Water side pressure drop, psi	2.0	2.0	2.0	2.0
Evaporator brine flow, gpm	11	16	21	26
Hot brine flow, gpm	16	23	31	38
Domestic hot water flow, gpm	6	9	12	15
Cooling mode operation[b]				
Evaporator cooling rating, Btu/h	23,950	36,000	48,800	60,550
Compressor-only cooling COP	2.40	2.55	2.33	2.45
Maximum heat-rejection rate, Btu/h	32,800	50,780	67,550	84,800
Compressor electrical draw, kW	2.92	4.23	6.14	7.24
Associated components				
Indoor air coil				
Cooling capacity at 32°F bin, Btu/h	31,500	47,300	63,000	71,100
Cooling capacity at 45°F bin, Btu/h	22,621	33,900	45,195	51,000
Water side pressure drop, psi	1.0	1.0	1.0	1.0
Air side pressure drop, in. H_2O	0.2	0.2	0.2	0.2
Fan electrical draw, kW	0.53	0.79	1.06	1.32
Outdoor air coil				
Maximum heat rejection rate, Btu/h	32,800	50,780	67,550	84,800
Fan electrical draw, kW	0.38	0.58	0.76	0.96
Water side pressure drop, psi	1.0	1.0	1.0	1.0
Pumps				
Hot brine pump, kW	0.22	0.33	0.44	0.55
Cold brine pump, kW	0.16	0.24	0.32	0.40
Hot water pump, kW	0.09	0.13	0.18	0.22

[a]100°F average hot brine temperature and 15°F average evaporator brine temperature.

[b]120°F average heat rejection brine temperature and 40°F average evaporator brine temperature rated at 95°F outdoor air temperature.

The heat pump model selected for a particular ACES application must have a heat output rating sufficient to supply the design hourly heat load of the building. (A method for estimating the design hourly heat load of a building is detailed in Sect. 8.) The selection of a heat pump model with a capacity exactly matching the design hourly heat load of the building is generally not possible because the available heat pump models (i.e., heating capacity sizes) will be limited. Instead, a model must be selected the heating capacity of which exceeds, as little as possible, the estimated design hourly heat load of the building.

For example, if the building has a calculated design hourly heating load of 40,000 Btu/h, use of Table 4.1 indicates that model HP-2 should be selected as the heat pump mechanical package because the heat output rating of model HP-1, 30,000 Btu/h, would be too small. Table 4.1 also lists the compressor-only heating COP for model HP-2 as 2.9. Note that this value applies only to the heat pump unit, not to the system as a whole. If model HP-2 is applied in an ACES, the heating COP of the system will be lower than 2.9 because of the additional power required for auxiliary components of the system.

4.2 Ice Storage Bin

The volume of the ice bin can be selected to yield a minimum, partial, or full ACES with respect to the amount of interseasonal energy transfer that is to be achieved. The smallest energy storage tank for a residential ACES should have a thermal storage capacity sufficient for operation under adverse weather conditions that will preclude the use of the solar collector panel for a period of at least two weeks during the peak heating season. This margin of thermal capacity protects the system against loss of heating capability that could result from fluctuations in the availability of solar and ambient-air heat during the critical cold months of the year.

An ice bin for a full ACES must be large enough to store all of the ice produced during the heating season or the amount of ice needed for summer air conditioning, whichever is smaller. The volume of an ice bin for a partial ACES can be anywhere within the range of that for minimum

and full ACES. After the active storage volume of the bin is selected, additional requirements must be taken into account to determine the interior dimensions of the bin. These include provision for additional bin space for freeboard access and ice-ballast weights and cross sectional bin dimensions just large enough to accommodate the ice-bin heat exchanger without wastage of bin volume.

4.2.1 Minimum-ACES bin

Based upon the above considerations, the thermal capacity of the ice bin for a minimum ACES is

$$TCAP = \frac{\alpha_I(H)[q_H(1) + q_{HW}(1)]}{2} , \qquad (4.1)$$

where

TCAP = thermal storage capacity of the minimum-ACES ice bin, MBtu;

$q_H(1)$ = space-heating demand of the building during January, MBtu;

$q_{HW}(1)$ = heat required for hot water production during January, MBtu;

$\alpha_I(H)$ = bin transfer coefficient for heating mode operation during the ice phase of the annual cycle, as defined by Eq. (2.4).

The required wetted volume of the ice bin (ft^3) for a minimum ACES, exclusive of bin volume for freeboard access and ice-ballast weights, can be calculated by substituting the latent heat-storage capacity given by Eq. (4.1) into the expression

$$V_{MIN} = TCAP/8.208\ PF , \qquad (4.2)$$

where the variable PF is the packing fraction of the stored ice.

4.2.2 Full ACES bin

In climates where the annual heating demand of buildings greatly exceeds the annual cooling demand, more ice is produced during the heating season than is required for summer air conditioning. In these cases, ambient energy (Q_{COL}) must be collected during the heating season to melt the excess ice. In climates where cooling needs predominate, the amount of ice formed during the heating season is insufficient to meet the summer cooling requirements of the building. Here, supplemental air conditioning (Q_{SC}) must be provided by operating the heat pump on summer nights to produce chilled water or ice. Thus, to provide maximum interseasonal energy transfer, the selected size of the full-ACES ice bin is such that either Q_{COL} or Q_{SC} goes to zero under design-year weather conditions. If the bin is smaller than that needed for a full ACES, the system must provide both heat collection in the winter and supplemental cooling in the summer.

The ice bin volume required for a full ACES is calculated by an iterative process beginning with a first estimate of the ice bin volume obtained from Table B.2 of the Appendix. The estimated bin volume is successively refined by using work form 5 and work form 6 (Sect. 8.3) to calculate the values of Q_{COL} and Q_{SC} that correspond to each assumed bin volume. If both Q_{COL} and Q_{SC} initially have positive values, the bin volume must be increased and these variables recalculated. The bin volume that causes either Q_{COL} or Q_{SC} to go to zero is, by definition, the full ACES bin size. A few iterations are sufficient for calculating the full ACES bin size because the computed bin volume will maximize the interseasonal energy transfer of the system only for design-year weather conditions. Deviations from standard weather year conditions will alter the amount of interseasonal energy transfer that can be achieved by the system.

4.3 Ice-Bin Heat Exchanger

4.3.1 Description and design criteria

The ice-bin heat exchanger consists of parallel, interconnected lengths of tubing arranged horizontally in a square lattice within the ice bin and connected to the shell of the heat pump evaporator to form a flow path through it. A low-freezing-point brine is circulated through the heat exchanger to carry heat from the water in the bin to the evaporator. The evaporator extracts heat from the brine, cooling it to an average temperature that can range from 15 to 28°F.

The heat-exchanger tubing can be constructed of any material that is compatible with the brine-and-water environment and possesses sufficient tensile strength to support the ice log that forms around it. Common materials suitable for this purpose include polyethylene, copper, PVC-plastic, and steel. Plastic tubing is the most attractive of these materials because of its low cost. Rigid plastic tubing with an outer diameter of 1 in. and an inner diameter of 0.85 in. can be used to provide the heat transfer area, in which case structural supports must be installed in the ice bin at 70-in. intervals or less, to maintain the lattice position of the tubes and to prevent their rupture in the event of ice-log fracture.

The principal design requirement of the ice-bin heat exchanger is that it must be able at all times to deliver heat to the evaporator at a rate that allows the heat pump to operate at its design heat output and evaporator temperature. The design heat flow rating of the evaporator can be obtained from listings of performance data for specific heat pump units provided by the manufacturer. For example, the evaporator rating for model HP-2, listed in Table 4.1, is 31,150 Btu/h. Secondary design criteria for the ice-bin heat exchanger relate to the establishment of desirable brine flow characteristics within the tubing. Parallel flow paths may be required in the ice-bin brine circuit so that reasonable rates of brine flow in the evaporator shell can be obtained with a reasonable pumping power.

4.3.2 Total tubing length

The rate of heat extraction from the ice bin depends upon the total length of active tubing provided in the heat exchanger and the diameter of the ice log that has formed around it. The bin heat exchanger must have a total length of tubing that will enable it to deliver the design heat rating of the heat pump evaporator, H_{EV}, even when the ice logs have reached their maximum diameter. If the heat exchanger consists of a number of horizontal tubes, spaced D ft apart in a square lattice and connected by risers to form a serpentine configuration, the maximum attainable diameter of the ice logs is equal to the lattice spacing. The heat extraction rate obtainable by this system can be analyzed on the basis of radial heat conduction through hollow circular cylinders with convection at the outer surface.

The physical system in cross section and the thermal-circuit diagram are shown in Fig. 4.1; the heat flow is assumed to be in a radial direction and the thermal resistance of the inner fluid film is assumed to be negligible. The inner and outer diameters of the cylinder are d and D, respectively; h is the heat transfer coefficient at the water-to-ice interface. The rate at which heat is extracted from the water (Btu/h), also equal to the design heat rating of the evaporator, is expressed by

$$H_{EV} = \frac{(32 - T_B)}{\ln(D/d)/2\pi k\ell + 1/hA_I}, \tag{4.3}$$

$$H_{EV} = \frac{2\pi k\ell(32 - T_B)}{\ln(D/d) + 2k/hD}. \tag{4.4}$$

Here,

H_{EV} = rate of heat extraction from the bin, Btu/h, also equal to the evaporator design heat rating;

k = thermal conductivity of the ice and plastic tube, 1.33 Btu/h/ft/°F;

ℓ = total active length of ice-bin heat exchanger tubing, ft;

ORNL-DWG 79-16640

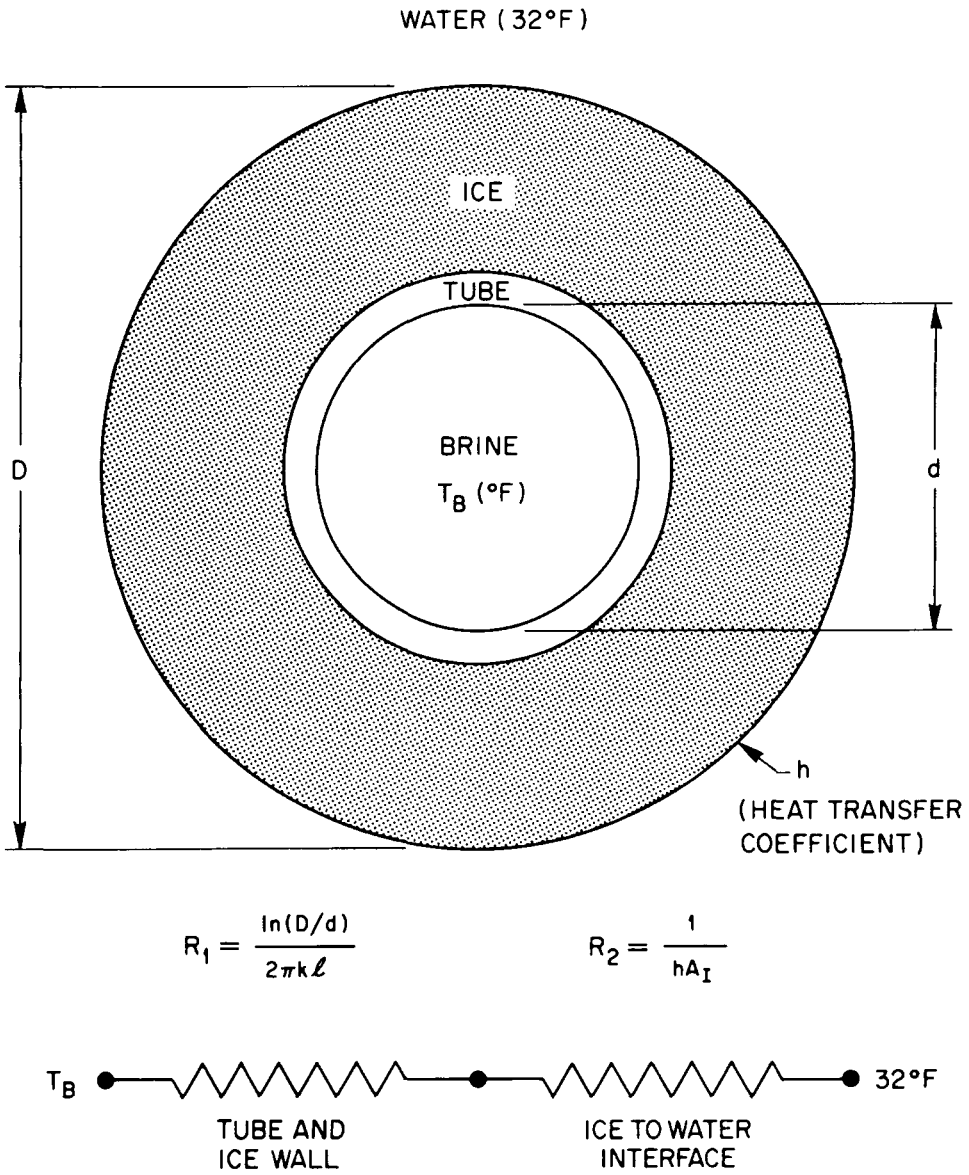

Fig. 4.1. Heat conduction in ice-bin heat exchanger with outer surface convection boundary.

T_B = average temperature of brine in the evaporator shell, °F;

d = inner diameter of heat-exchanger tubing, 0.85/12 ft;

D = maximum ice log diameter; also the lattice spacing, ft;

h = convective heat transfer coefficient at water-to-ice interface, 15 Btu/h/ft^2/°F;

A_I = outer surface area of ice log, $\pi D\ell$, ft^2.

Equation (4.4) can be used to determine the total length of tubing, ℓ, that must be installed in the ice bin, at a square lattice pitch of D inches, to ensure that the heat exchanger can deliver at all times the heat flow rating of the evaporator when it is operating at its design point. However, a more useful expression for design calculations can be obtained by expressing ℓ in terms of the ice bin volume (ft^3), V:

$$V = D^2\ell \ . \tag{4.5}$$

Dividing Eq. (4.4) by Eq. (4.5) gives, in Btu/ft^3:

$$H_{EV}/V = \frac{2\pi k(32 - T_B)}{D^2 \ln(D/d) + 2kD/h} \ . \tag{4.6}$$

The ratio H_{EV}/V represents the extraction rate density, ERD, or the heat extraction rate per unit volume of ice bin. These values are plotted in Fig. 4.2 and can be used in a convenient three-step procedure to determine the total length of heat-exchanger tubing required:

1. Calculate the extraction rate density (Btu/h/ft^3) for the ACES according to the expression,

$$ERD = H_{EV}/V \ , \tag{4.7}$$

   where V is the wetted volume of the ice bin, ft^3, and H_{EV} is the design heat flow rating of the heat pump evaporator, Btu/h.

2. From Fig. 4.2, determine the lattice spacing D that is required to yield this extraction rate density. Note that the units of D,

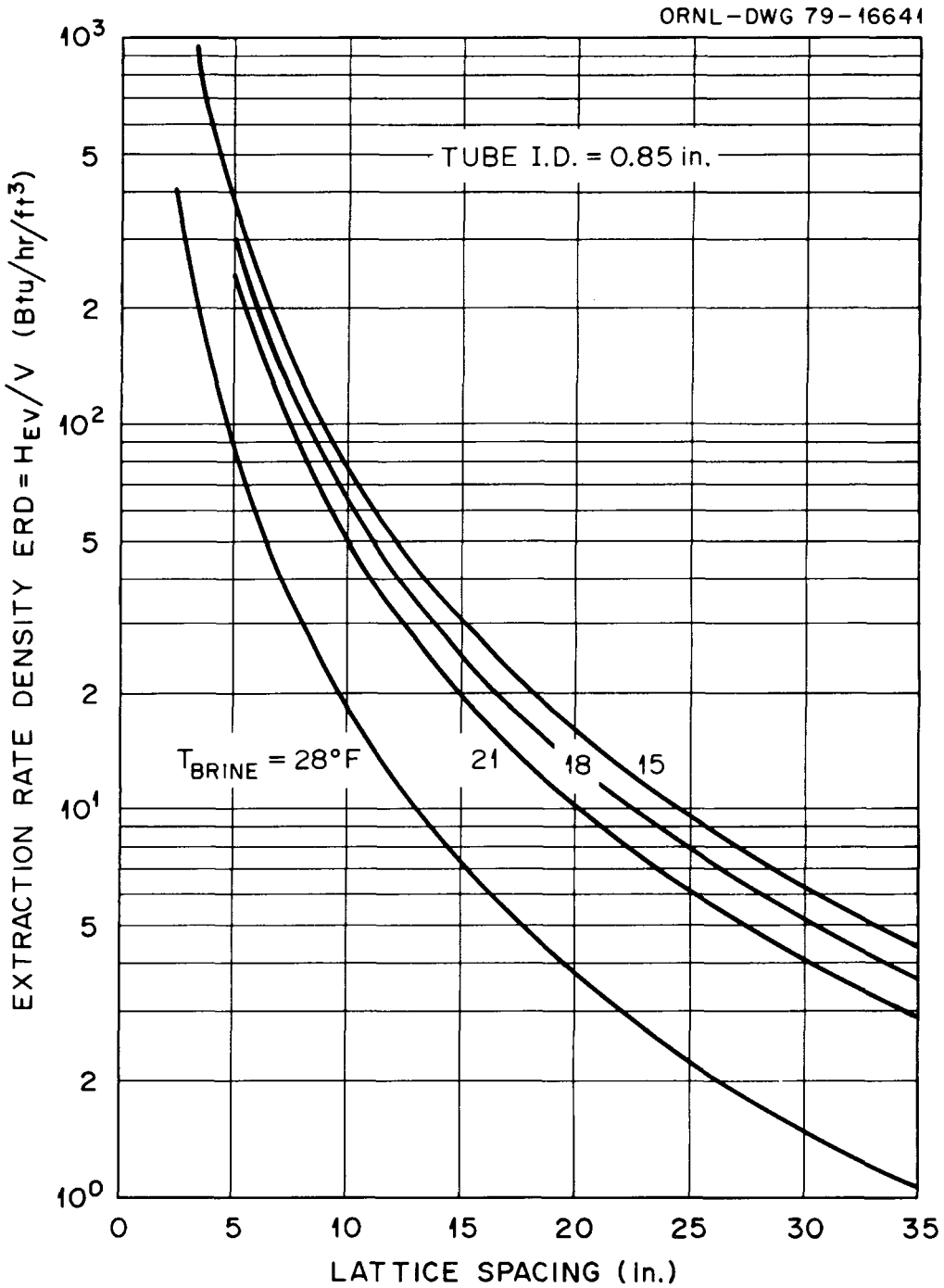

Fig. 4.2. Extraction rate density vs lattice spacing.

obtained from Fig. 4.2, are in inches. Convert the value of D to units in feet by dividing by 12.

3. Calculate the required total length of tubing in the ice bin (ft) by the expression

$$\ell = V/D^2 \ . \tag{4.8}$$

The selection of a brine temperature, T_B, in step 2 of the above procedure depends upon the objectives of the ACES designer. If the residential ACES is to have maximum energy conservation potential, the value T_B = 28°F should be used in the analysis. A heat exchanger having a shorter length of tubing than is obtained by using a brine temperature of 28°F will require a lower refrigerant evaporation temperature to deliver the heating demand of the building. This will result in a lower COP for the system and, consequently, a higher power consumption. Whether or not the dollar savings obtained by using the smaller heat exchanger will outweigh the increased power costs depends upon the local rate for electrical power. Table 4.2 shows cost-optimized values of T_B, as a function of local power costs, that are recommended for use in ice-bin heat exchanger design calculations.

Table 4.2. Cost-optimized brine temperatures for heat-exchanger design calculations[a]

Power costs[b] (¢/kWh)	Average brine temperature, T_B (°F)
4	15
7	18
10	21
above 10	28

[a]Assumes tubing cost of $1.50/ft and a 20-year amortization time.

[b]In 1978 dollars.

4.3.3 Parallel flow circuit design

A secondary objective of ice-bin heat exchanger design is to determine the arrangement of the heat-exchanger tubing within the ice bin that will produce an adequate brine flow rate in the tubes, at a reasonable pumping power. Turbulent flow is preferred because it enhances the heat-transfer film coefficient between the brine and the tube wall. The heat-exchanger tubing can be arranged either as a single, long serpentine configuration, Fig. 4.3(a), or it can be divided into a number of parallel branches, Fig. 4.3(b).

In Fig. 4.3(b), the total length of heat-exchanger tubing, ℓ, is considered to be divided into N branches of length, L. These branches are connected in parallel in the pump and evaporator circuit. The required mass flow rate of the brine through the evaporator, $\dot{M}$ (lb/h), is specified by the evaporator design heat rating and the average temperature drop of the brine as it flows through the evaporator:

$$\dot{M} = H_{EV}/C_p\Delta T \ . \tag{4.9}$$

The mass flow rate through an individual branch follows from mass balance requirements.

The principal advantage of the parallel circuit is that the pumping power required to overcome the frictional resistance to fluid flow through long tubes is greatly reduced. Typically, a residential ACES may employ a brine pump capable of delivering a flow rate of about 12 gpm at a pressure head of 10 psi and an evaporator having a pressure drop of about 4 psi on the brine side. The design problem in terms of the heat exchanger tubing configuration is to determine the number of equal-length flow paths that will produce turbulent flow in each branch of the circuit, with a pressure drop not to exceed 6 psi.

Turbulent flow is characterized by the presence of eddy currents in the flow stream, that is, fluid motion occurs across the stream as well as in a direction parallel to the tube axis. In an ice-bin heat exchanger, this radial motion serves to increase the transfer of heat from the

ORNL-DWG 79-16642

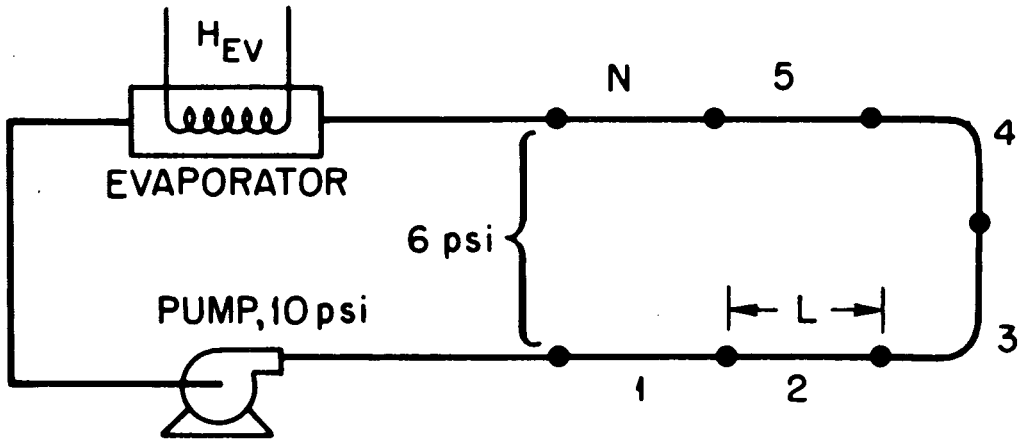

$\ell = NL$

(*a*) SERIES CIRCUITING

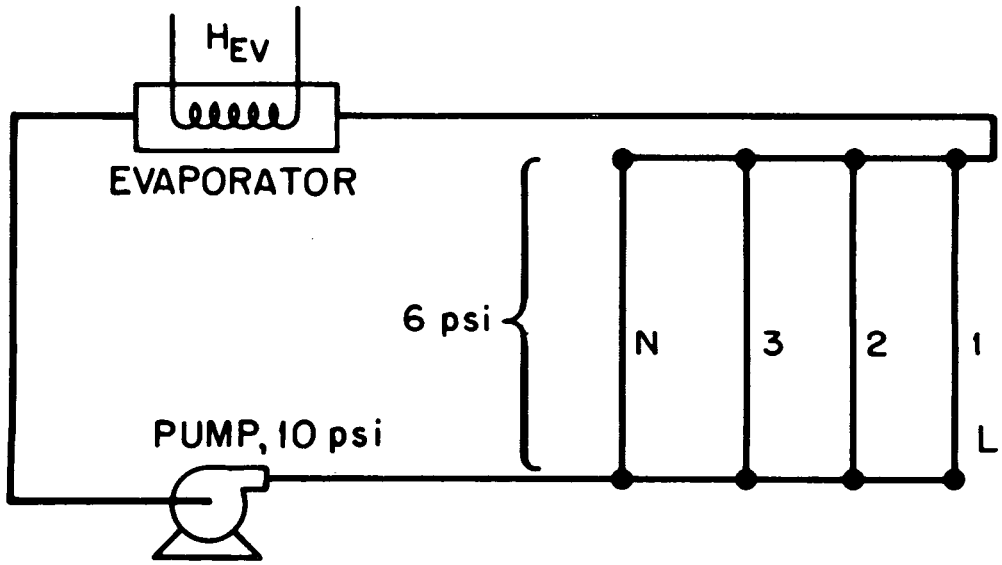

$\ell = NL$

(*b*) PARALLEL CIRCUITING

Fig. 4.3. Schematic diagram of ice-bin heat exchanger circuits.

surrounding medium into the tube. Stream flows are characterized by means of the Reynolds number, Re, which is defined as:

$$Re = \frac{(d)(v)(\rho)}{\mu} \tag{4.10}$$

where

d = tube inner diameter, ft;
v = mean velocity of the fluid, ft/h;
ρ = density of the fluid, lb/ft^3;
μ = viscosity of the fluid, lb/ft/h.

In tubes of uniform cross section, the fluid flow is laminar if Re is less than about 2100 and is turbulent if Re exceeds about 4000. The transition point from laminar to turbulent flow depends upon the surface roughness of the tube. For rigid plastic tubing, turbulent flow occurs when Re reaches or exceeds 3500.

The pressure drop resulting from fluid friction, ΔP_f, that accompanies turbulent flow at a mean velocity v in a circular tube of diameter d and length L is given by the Fanning equation:

$$\Delta P_f = \frac{4f\rho v^2 L}{2gd}, \tag{4.11}$$

where g is the acceleration resulting from gravity (32.2 ft/s^2) and f is a dimensionless quantity called the friction factor. Measured values of f, as a function of Re, are obtainable in the literature for both smooth and commercial-grade pipes. The friction factor can also be calculated by the Blasius equation — a simple correlation that holds with good accuracy for turbulent flow in smooth pipes:

$$f = 0.079Re^{-0.25}. \tag{4.12}$$

Maximum number of branches for turbulent flow

The lowest acceptable brine flow velocity through the heat-exchanger tubing should yield an Re of at least 3500. This requirement determines the

maximum number, N_{MAX}, of equal-length parallel flow paths into which the total tubing length of the heat exchanger may be subdivided. An expression for N_{MAX} may be obtained by solving Eq. (4.10) for the brine flow velocity, with Re set to 3500, and substituting the result into the mass flow balance equation. The mass flow balance equation states that the sum of the mass flows through separate branches of the parallel circuit must equal the mass flow rate of the brine through the evaporator shell. The expression obtained is:

$$\left(N_{MAX}\,\frac{\pi d^2}{4}\right)\rho\left(\frac{3500\mu}{\rho d}\right) = \frac{H_{EV}}{C_p\Delta T}\,, \tag{4.13}$$

where

d = inner diameter of the tubing, ft;

μ = brine viscosity, lb/ft/h;

C_p = brine specific heat, Btu/lb/°F;

ΔT = average temperature drop of the brine as it flows through the evaporator, typically equal to about 4°F.

Assuming ΔT = 4°F and solving for N_{MAX}, the maximum number of parallel branches in the ice-bin heat exchanger circuit that will still yield turbulent flow is:

$$N_{MAX} = \frac{H_{EV}}{K_1}\,, \tag{4.14}$$

where

$$K_1 = 3500\pi\mu d C_p \tag{4.15}$$

in Btu/h.

<u>Minimum number of branches for ΔP_f < 6 psi</u>

The brine flow velocity through the heat-exchanger tubing must also yield a pressure loss resulting from friction that does not exceed 6 psi,

or 864 lb/ft^2, as calculated by means of Eq. (4.11). This requirement determines the minimum number, N_{MIN}, of parallel flow paths for the ice-bin heat exchanger that will still yield a pressure drop less than 6 psi. The mass flow balance equation,

$$N_{MIN} \frac{\pi d^2}{4} \rho v = \frac{H_{EV}}{C_p \Delta T} , \tag{4.16}$$

provides an expression that can be solved for v, the result of which may be substituted into the definition of Re [Eq. (4.10)]. The expression obtained for Re is then substituted into the Blasius equation [Eq. (4.12)] to obtain the friction factor, f. An inspection of Eq. (4.11) shows that all of the variables needed for computing the pressure drop in the parallel tubes resulting from friction are now specified, with the exception of the tube length, L, which is defined to be ℓ/N_{MIN}. Substituting the relationships for f, v^2, and L into Eq. (4.11) and solving the resulting expression for N_{MIN} yields:

$$N_{MIN} = \frac{H_{EV}^{7/11} \ell^{4/11}}{K_2} , \tag{4.17}$$

where

$$K_2 = \left[\frac{\Delta P_f \pi^{7/4} g \rho d^{19/4} C_p^{7/4}}{2(0.079)\mu^{1/4}} \right]^{4/11} . \tag{4.18}$$

Application of Eq. (4.14) and (4.17) in designing the ice-bin heat exchanger circuit requires knowledge of the physical properties of the brine solution. These properties and computed values of the constants K_1 and K_2 for several different brine compositions are listed in Table 4.3. In selecting a particular brine composition for the ACES, it is important to ensure that the freezing point of the brine will be well below the lowest outdoor temperature likely to be encountered in the given location.

Table 4.3. Brine properties at 15°F

Solution by wt. %	Freezing point (°F)	Brine density (lb/ft^3) ρ	Specific heat (Btu/lb/°F) C_p	Viscosity of brine (lb/ft/h) μ	K_1[a] (for N_{MAX})	K_2[a] (for N_{MIN})
			Methanol and water			
20	8	60.9	0.980	11.9	9,083	2,344
25	1	60.5	0.950	12.6	9,323	2,281
30	-9	60.2	0.920	13.3	9,530	2,220
35	-21	59.8	0.895	14.5	10,108	2,159
40	-31	59.3	0.865	13.3	8,960	2,122
			Ethylene glycol and water			
25	13	64.8	0.900	12.6	8,832	2,259
30	5	65.3	0.870	14.5	9,825	2,189
35	-3	65.8	0.837	19.0	12,386	2,090
40	-12	66.4	0.803	19.8	12,383	2,034
45	-19	66.9	0.774	32.0	13,865	1,966
50	-31	67.4	0.743	31.4	18,171	1,867
			Propylene glycol and water			
30	13	64.5	0.930	26.6	19,267	2,152
35	4	64.8	0.910	36.3	25,728	2,066
40	-4	65.2	0.885	48.4	33,361	1,982
45	-14	65.5	0.862	61.7	41,424	1,910
50	-29	65.8	0.835	84.7	55,084	1,821

[a]Evaluated for a tube inner diameter of 0.85 in. and a pressure drop of 6 psi.

Number of parallel branches

The following procedure is used to determine the number of parallel circuits to be provided for an ice-bin heat exchanger having a predetermined total tubing length of ℓ feet.

1. From Table 4.3 select a brine composition that has a freezing point well below the lowest outdoor air temperature likely to be encountered at the given locality. (Table B.2 lists the outdoor air temperature that is equaled or exceeded 99.0% of the time, on the average, during the coldest three consecutive months of the year. The brine composition selected should have a freezing point well below this value.) From Table 4.3 find the values of K_1 and K_2 for the brine composition selected.

2. Calculate the maximum number of parallel branches that can be provided in the heat-exchanger circuit and still yield turbulent brine flow within the tubing. This number, N_{MAX}, is calculated using Eq. (4.14),

$$N_{MAX} = H_{EV}/K_1 \ ,$$

where H_{EV} is the design heat rating of the evaporator. The computed value of N_{MAX} must be rounded to the next lower integer.

3. Calculate the minimum number of parallel branches that can be provided in the heat-exchanger circuit and still yield a pressure drop resulting from friction that is less than 6 psi. This number, N_{MIN}, is obtained from Eq. (4.17),

$$N_{MIN} = [H_{EV}^{7/11} \cdot \ell^{4/11}]/K_2 \ .$$

Alternatively, N_{MIN} can be read directly from Fig. 4.4 for given values of ℓ and H_{EV}. In either case, the value of N_{MIN} must be rounded to the next higher integer.

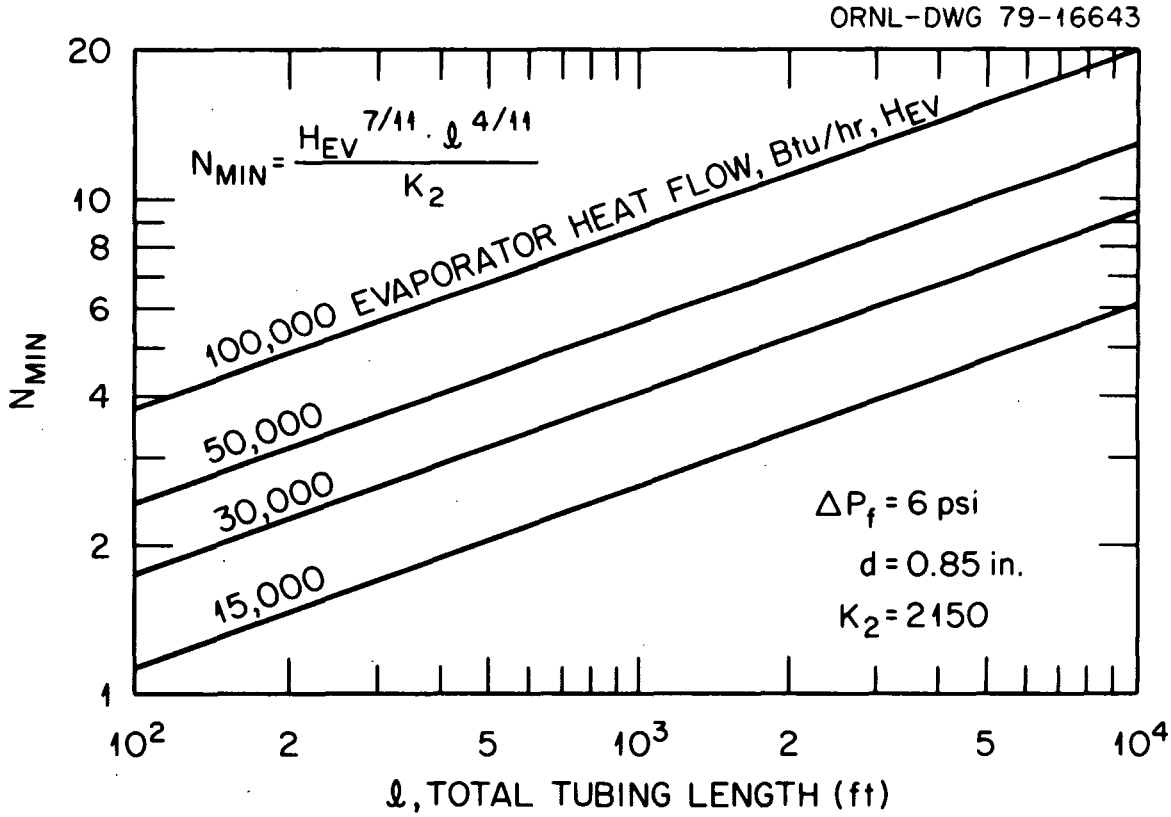

Fig. 4.4. Minimum number of parallel circuits in ice-bin heat exchanger.

4. Determine the number of parallel branches to be provided in the ice-bin heat exchanger circuit by examining the results of steps 2 and 3. In the case of conflicting requirements, N_{MIN}, the condition yielding an acceptable pressure drop in each branch of the circuit, is selected.

4.4 Ice Bin and Heat-Exchanger Design Interaction

The ice storage bin is assumed to be a right parallelepiped of width W, length L, and height H. Section 4.2 describes a procedure for determining the required bin volume but does not specify the linear dimensions of the bin. However, it is important to select two of the tank dimensions such that the ice-bin heat exchanger can be accommodated without wastage of bin volume. For horizontally positioned heat-exchanger tubes this means that the vertical faces of the bin described by the variables W and

H, or H and L, should be selected to have linear dimensions that are an integral number of lattice spacings. Section 4.3.2 describes a procedure for determining the lattice spacing, D, of the heat-exchanger tubing. The third dimension of the bin should then be adjusted to yield the required volume of the storage bin.

4.5 Collector Panel Design

In climates where a residential ACES forms more ice than will be needed during the cooling season, the size of the ice storage bin is chosen to satisfy the cooling-season requirements alone. As a result, the thermal capacity of the bin is insufficient to meet the total heat withdrawals during the heating season. Therefore, the ACES design must include provisions for collecting ambient energy from the environment and depositing it in the bin during the heating season. Possible techniques for collecting ambient heat include: (1) use of glazed or unglazed solar panels, (2) use of underground heat exchangers or heat pipes to collect heat from the earth, (3) use of recuperators to recover waste heat from the building, (4) operation of the heat pump to deliver heat to the bin, or (5) use of various combinations of these. In this report the authors assume that an unglazed, outdoor panel is used to collect ambient heat. However, further studies are needed to determine the economics of other types of heat collectors.

4.5.1 Test panel design and performance

Figure 4.5 shows an unglazed solar/convector panel of the type proposed for residential ACES applications that was built and tested at the Oak Ridge National Laboratory. The panel consists of extruded aluminum-finned tubes that are horizontally positioned and supported in parallel segments on a wooden frame. The plane of the fins faces southward and is inclined at an angle from the horizontal equal to the latitude of the location plus 20°. This angle of tilt, $\beta = L + 20°$, is selected to achieve maximum collection of solar radiation during the winter months. The experimental panel shown in the figure is similar to some commercial panels commonly used to heat swimming pools.

ORNL-DWG 79-16644R

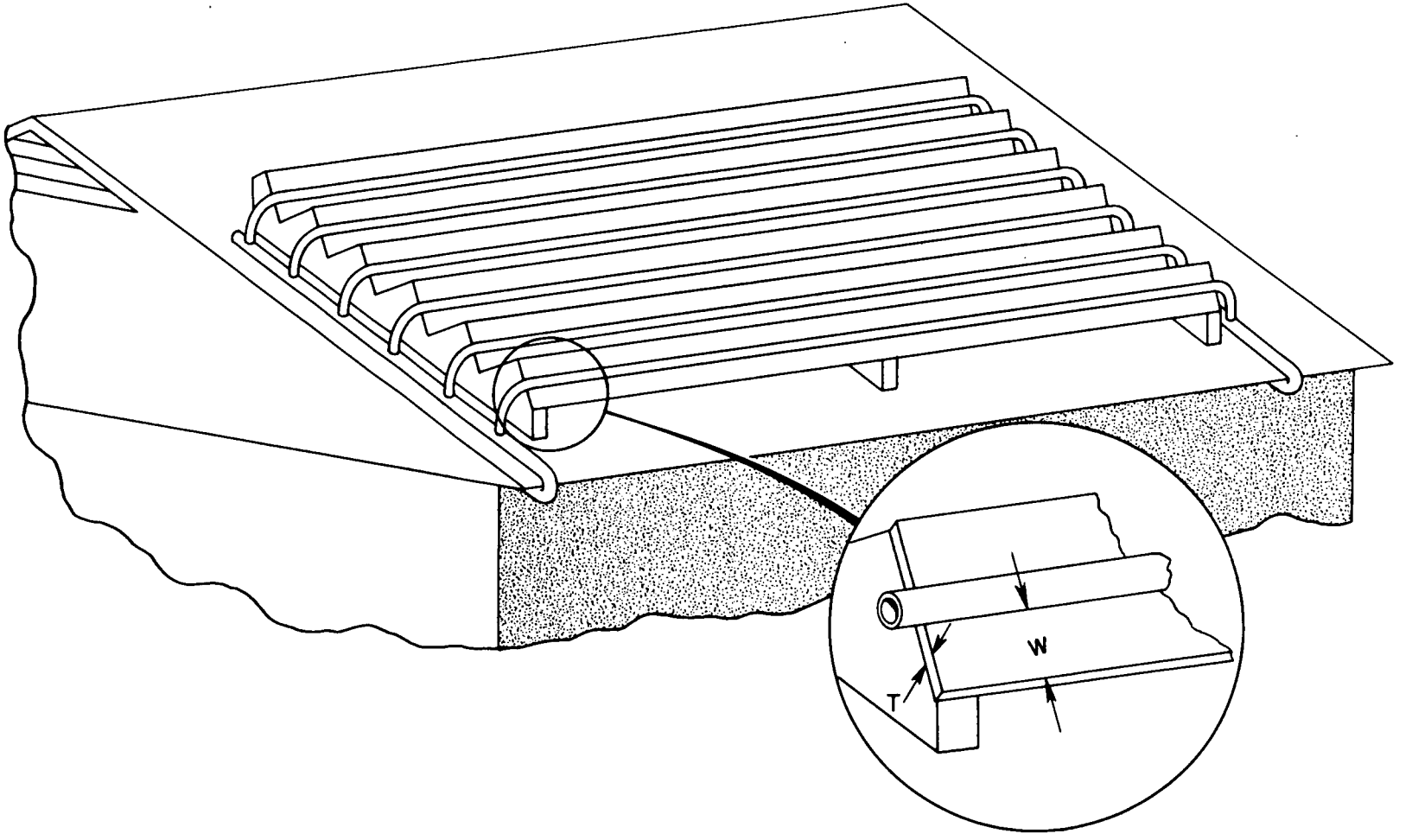

Fig. 4.5. Proposed installation of solar collector panel.

Panel dimensions

The total surface area of collector panel that must be installed for a given ACES depends upon the unit heat-collection capacity of the panel. Experiments conducted on the test panel indicate that its heat-collection capacity, in MBtu/ft^2/month, is critically affected by the dimensions of the fins. The results of the experiments show that the fins should be designed to have a W/T ratio of 40 or less, where W is the distance from the tube to the fin tip and T is the thickness of the metal at the base of the fin (Fig. 4.5). This W/T ratio yields a fin efficiency that has proven satisfactory for finned-tube collector panels that have been integrally fabricated from conductive metals such as aluminum or copper.

Surface finish

The absorptivity of the collector panel for normal incident solar radiation is affected by the condition of the panel surface. An untreated aluminum panel with a natural mill finish will exhibit a low absorptivity — about 0.50. The absorptivity of the surface can be enhanced to a value of about 0.93 by applying a coat of absorptive paint. This was done for the test panel and is recommended for all unglazed solar collector panels used with the ACES. The unit heat-collection capacities of all panels listed in Table B.2 of the Appendix are based on the assumption that the panel surface has been treated to obtain an absorptivity of $\alpha = 0.93$.

Test panel performance

The heat-collection capability of the test panel was measured at Oak Ridge, Tennessee, for extended periods of time during both winter and spring outdoor weather conditions. The experimental data obtained were fitted to an expression of the form,

$$Q/A = F_f[\alpha I + 2U(T_a - T_b) - R] \ , \tag{4.19}$$

where

Q/A = rate of heat collection per unit area of panel, Btu/h/ft^2;

F_f = fin efficiency factor;

α = absorptivity of panel surface for normally incident radiation,
I = daytime average solar radiation intensity, Btu/h/ft^2;
U = convection coefficient, Btu/h/ft^2/°F;
T_a = temperature of the outdoor air, °F;
T_b = entering brine temperature, °F;
R = rate of panel heat loss by longwave radiation interchange with the sky and surroundings.

The preceding equation represents a heat balance on an unglazed collector panel through which brine, entering at a temperature of 32°F, is circulated as the heat-transfer fluid. The equation states that the heat collected is equal to the absorbed solar radiation plus convective heat gains (or losses) from the ambient air, less any panel heat losses by longwave radiation interchange with the surroundings. The term of the equation representing convective heat transfer between the panel and the ambient air is defined such that the panel gains heat by this mechanism only when the ambient air temperature exceeds 32°F. Also, note that this term of the equation is doubled to taken into account the fact that convective heat collection occurs on both sides of the panel fins.

The convection coefficient depends strongly upon the outdoor wind speed, and the fin efficiency factor is, in turn, a function of the convection coefficient. Analysis of the data obtained from experiments with the test panel show that these parameters are well represented by the correlations

$$F_f = 0.941 - 0.028U \ , \tag{4.20}$$

and

$$U = 0.912 + 0.409W \ , \tag{4.21}$$

where U is in units of Btu/h/ft^2/°F and W is the outdoor wind speed in miles per hour. The rate of heat loss from the test panel by longwave radiation interchange with the surroundings, R, was found to be 15 Btu/h/ft^2.

4.5.2 Collector panel size

The empirical correlations determined for the test collector panel have been used to compute integrated monthly heat-collection capacities for this type of panel installed in other geographical locations of the country. These heat-collection capacities, PAN(m), are listed in Table B.2 of the Appendix. The table values, in MBtu/ft^2/month, are based on average solar radiation intensities predicted by the method of Liu and Jordan, on design-year bin tabulations of ambient air temperatures for the given localities, and on the conservative assumption of single-sided convective heat transfer between the panel and the outdoor air.

The total panel surface area required for a residential ACES depends upon the imbalance in ice-bin heat flows occurring over an annual cycle and upon the unit area heat-collection capability of the selected panel type. Unit heat-collection capacity values PAN(m) for collector panels of the design described in the preceding section can be obtained from Appendix B. If commercial panels are used, monthly performance data for the panels installed in a given locality must be obtained from the manufacturer. Work form 5, used for determining the size of a solar collector panel for a particular residential ACES based on known performance characteristics of the specific panel, is described in Sect. 8 of this report.

4.6 Waste-Heat Rejector

In the supplemental phase the heat pump is operated at night to chill water in the bin for use in space cooling for the following day. The waste heat generated by the heat pump must be rejected into the environment. This report recommends that an outdoor fan coil unit be used for this purpose and that it be purchased as part of the ACES mechanical package. Thus, the fan coil will be factory-constructed and properly designed to match the maximum heat-rejection rate of the heat pump. Alternatively, however, waste heat can be rejected to the environment by circulating hot brine from the heat pump condenser through an outdoor heat rejector panel. The heat from the brine is dissipated by convection to the night air and

by radiation to the surroundings. Design considerations for determining the heat rejector panel size are described in the following section.

The size of a dual-purpose panel to be used as a heat collector during the winter and as a heat rejector during the summer must be determined separately for each function; the size of the panel installed in the system must be the larger of the two. The required area of the heat rejector panel can be derived from Eq. (4.19) by setting the variables I and R to zero and solving for panel area, A. (The solar radiation intensity is zero because of nighttime panel operation, and the panel radiative heat loss is conservatively taken to be zero because it depends upon the night cloud cover, which is highly variable.) Replacing Q with the maximum heat-rejection rate of the heat pump, H_o Btu/h, and introducing a negative sign to indicate heat rejection results in the expression,

$$A = \frac{H_o}{F_f[2U(T_b - T_a)]} , \tag{4.22}$$

as ft^2.

A design equation for determining the heat rejector panel size can be obtained from Eq. (4.22) by substituting average summertime values of the variables into the expression. Using an average summer wind speed of 7 mph, the variables F_f and U can be computed from their respective defining equations, Eqs. (4.20) and (4.21). If it is further assumed that the temperature of the hot brine entering the rejector panel is nearly equal to the refrigerant condensing-temperature, then 20°F represents a conservative estimate of the temperature difference available to drive the convective heat flow between the panel and the night air. Substituting these values into Eq. (4.22) yields:

$$A \geqslant H_o/125 , \tag{4.23}$$

as ft^2.

The actual heat-rejection capability of a rejector panel sized according to Eq. (4.23) will vary with the outdoor ambient conditions.

The panel will be able to reject heat at a rate greater than the design requirement on clear nights when heat can be radiated to the surroundings and on cold nights when the temperature difference between the hot brine and ambient air exceeds 20°F. On warm, calm summer nights, however, the convective heat transfer coefficient, Eq. (4.21), will decline, reducing the heat-rejection capability of the panel. When this occurs, the refrigerant condensing-temperature will be forced to rise, resulting in a lower system performance. This occasional lowering of ACES performance in the supplemental phase of the annual cycle is considered to be a preferable alternative to providing a much larger heat rejector panel to meet the extremes of summer nighttime weather conditions.

5. RECOMMENDED CONSTRUCTION GUIDELINES

5.1 Ice Storage Bin Construction

5.1.1 General considerations

The ice bin is a major factor in both the cost and performance of the ACES. A properly designed and constructed bin that achieves a high ice-utilization factor and avoids the need for costly maintenance is essential to a successful ACES installation. The ice storage bin should be located underground to isolate it from the large temperature fluctuations of the ambient air. An underground location reduces the possibility of bin freeze-up, even in a northern climate, because the average monthly ground temperature around the bin is usually greater than 32°F. The top, bottom, and sides of the bin should be insulated to an equivalent thermal resistance of at least R-40, using standard insulation materials that are commercially available. These measures serve to reduce undesirable bin heat gains and heat losses.

The structural elements of the bin (i.e., roof, floor, and walls) must be capable of sustaining imposed loads from the surrounding earth, the weight of the contained water, and any aboveground loads. The bin should be rendered leak-proof by applying a waterproof coating or by installing a liner. The use of a liner is recommended because it provides greater assurance that the bin will remain leak-proof in the event of settling or other disturbances.

The internal assembly of the ice bin differs according to whether the bin is to be used with an ice-maker or a brine-chiller ACES. The storage bin for an ice-maker ACES must have an area at the top for introducing the ice from the plates of the ice-maker heat pump into the bin, and a floor grating must be installed in the bin to protect the waterproof membrane against possible puncture by falling ice. In addition, ice mounding must be prevented either by floating the ice or by installing mechanical baffles. The ice bin for a brine-chiller ACES must provide a support structure for the ice-bin heat exchanger. If tensile support elements are used for this purpose, the ice bin must also be provided with internal ballast weight to counteract the bouyant force acting on the ice.

5.1.2 Recommended bin location

The ice storage bin is the largest single component of the ACES; its location should be selected to minimize impacts on building aesthetics and functional areas and to provide service accessibility. Preferably, the bin should be located in an area where it is thermally isolated from the outside air and where it is protected against infiltration of ground or surface water. Construction below-grade protects the bin against mechanical or structural damage and shields it from the large temperature fluctuations of the ambient air. Provisions must be made to drain ground and surface water in the vicinity of the bin and to remove water released as a result of possible failure of the bin waterproof membrane.

Desirable sites for the ice storage bin are (1) beneath the floor of an attached garage and (2) beneath an outside covered patio. If the bin is located beneath an uncovered area, special sealing of the bin is required to prevent infiltration of surface water. The ice bin can also be constructed in the basement of the building. This location is not recommended for residences, however, because a significant volume of usable space within the house would be lost and because problems relating to structural loads and water condensation may be introduced. Location under the garage, which allows one to benefit from integrated construction, is recommended.

5.1.3 Bin structure

The recommended ACES storage bin is a free-standing, reinforced concrete structure located below-grade, as depicted in Fig. 5.1. The construction of the bin must comply with all local codes governing this type of installation and should conform with standard residential building practices. The footings must be suitable for the local soil conditions, and the reinforced concrete walls of the bin must be designed to support the weight of the water that will be stored in the bin. (Typically, a full ACES bin may contain from 2000 to 4000 ft^3 of water.) Both internal and external hydraulic loading on the bin structure must be accommodated.

The storage bin walls must be capable of supporting possible overhead loads as well as the pressure produced by the contained liquid. These

ORNL-DWG 79-16647

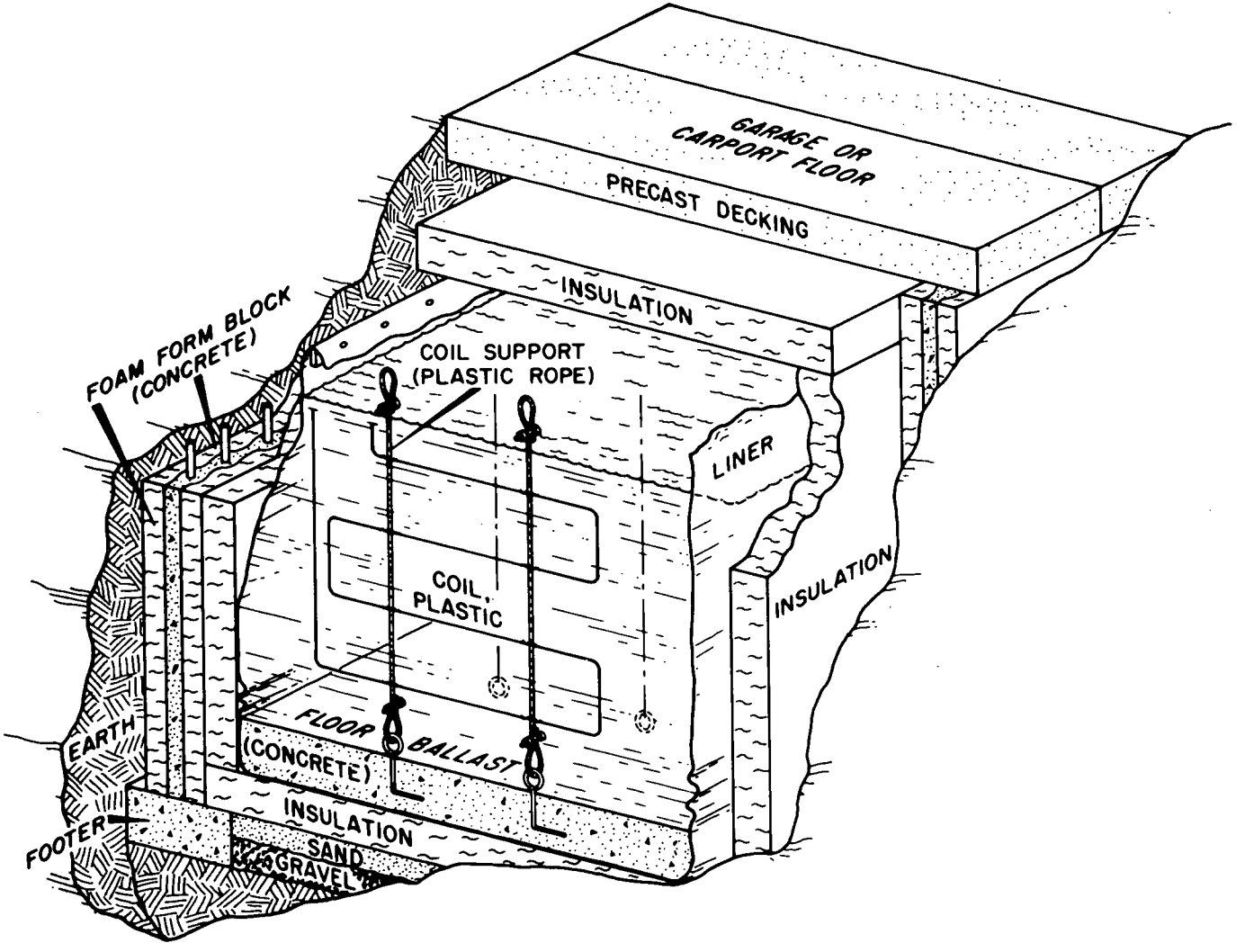

Fig. 5.1. Proposed ice storage bin construction.

structural requirements can be met by a low-cost, onsite construction technique employing structural steel and high-strength concrete that is poured into forms. After the forms are removed, sheet insulation is bonded to the concrete walls of the bin. An alternative method employs plastic forms that are left in place after the concrete is poured. A wall constructed in this manner offers both structural strength and inherent thermal insulation. Figure 5.2 shows one such type of plastic mold, "FOAM FORM,"* which has been used successfully in constructing the storage bin of a demonstration ACES. This product provides a thermal insulation value of R-16.

5.1.4 Bin insulation

A temperature difference across the bin walls will cause heat to flow into or out of the storage bin. During the winter, heat losses from the bin to colder surroundings could cause the stored water to freeze prematurely and result in a loss of heating capacity. On the other hand, bin heat gains from the environment act to reduce the amount of effective cooling that can be stored in the bin over a given period of time. The consequences of this reduced cooling storage capacity are: (1) for a full ACES in a northern climate, a greater bin volume is required to store the ice inventory needed for summer cooling and (2) for a partial or minimum ACES, or a full ACES in a southern climate, the supplemental cooling phase is lengthened and the system performance is lowered. Thus, it is desirable to reduce heat flow between the bin and its environment by constructing the bin below-grade and by insulating all of its surfaces. Bin insulation to a thermal resistance level of R-40 is recommended for all regions of the country.

The insulation material for an ACES storage bin should be easy-to-handle, lightweight, durable, and moisture-resistant and have a compressive strength that can withstand the weight of the stored water. A variety of suitable insulation products is available commercially. One such

---

*"FOAM FORM" is a registered trademark of FOAM FORM Canada, Ltd.

ORNL DWG 76-8814

FOAM FORM® BLOCK

For On The Site Construction Of INSULATED STORAGE TANKS For Hot Water or Ice

FOAM FORM blocks are in stock in the 6" core size (9" outside) and each block has a face area of 5.33 sq. ft. Block dimensions are 48" long by 16" high and thickness (over insulation) is 9". Weight per block is approximately 4 pounds. These blocks consist of two parallel molded sections of expanded polystyrene insulation held together by expanded metal ties. Our Part No. 5878.

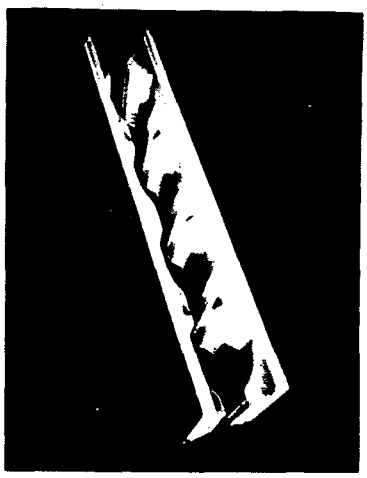

To construct a tank of any size required, soil is excavated and a reinforced concrete slab poured. In pouring the slab, vertical steel rods are positioned to pass through the center of the Foam Form blocks. Foam Form blocks are then assembled (tongue and groove) by dropping over the verticle rods. Horizontal steel reinforcing rods are laid inside each tier of Foam Form blocks. Corners are easily formed by mitring at 45°. Temporary bracing is used to keep corners and walls true while pouring.

The surface may then be covered inside and out with "Block Bond" or equivalent to waterproof the foam insulation. Or a vinyl liner may be used.

By use of Foam Form, a poured concrete tank may be constructed on the job to exactly fit the application and with a minimum of expense for forms.

The form becomes the permanent insulation and the insulating value is approximately R 16.

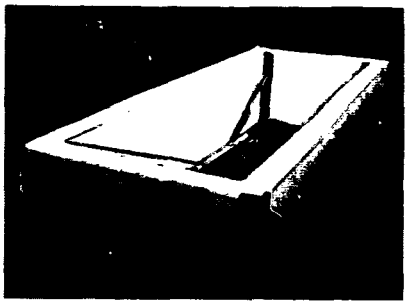

It is useful for most water or ice storage requirements, including the ACES (Annual Cycle Energy System) since it provides great flexibility and excellent insulation and relatively low cost.

® FOAM FORM is a registered trade mark of FOAM FORM Canada, Ltd., Scarborough, Ontario.

Fig. 5.2. "Foam Form" block.

material is "Styrofoam TG" (a registered trademark of the Dow Chemical Company). This product has been used successfully in a demonstration ACES ice bin and is available in tongue and groove form, in various sizes. The product has the following average properties: thermal conductivity, 0.185 Btu/h/ft^2/°F; density, 2.1 lb/ft^3; compressive strength, 40 psi at 5% deflection; and a water vapor transmission rate of 0.6 perm-in. The material can be cut easily and can be bonded to itself or to concrete surfaces using "Styrofoam Brand Mastic No. 11," also produced by the Dow Chemical Company. Other brand products having suitable physical properties may be used for insulating the ACES bin.

5.1.5 Waterproof membrane

A leak-proof membrane should be installed in the storage bin after the bin structure has been built and insulated. The membrane material may be either a nylon-reinforced plastic, such as "Hypalon" (Du Pont trademark), or a vinyl swimming-pool liner. (A Hypalon liner has been employed successfully in a demonstration ACES.) The liner must be installed loosely, allowing extra material at potential strain points to accommodate creep, expansion, and contraction of the bin. Properly installed, reinforced liners will provide a long lifetime of effective protection against loss of water inventory. The bin liner, installed interior to the insulation, also protects the insulation material against deterioration caused by moisture encroachment. After the bin liner has been installed, extreme care should be taken to maintain its integrity during subsequent construction activities.

5.1.6 Bin internal assembly for brine-chiller system

The bin internal assembly for a brine-chiller ACES is comprised of the ice-bin heat-exchanger coils and support structure for the coils. The support structure must be capable of restraining the buoyant forces that act upon the assembly as ice is formed around the heat-exchanger coils. At maximum ice inventory, these forces are equal to about 10% of the weight of the water initially contained in the bin. The buoyant forces acting on the heat exchanger in a full ACES storage bin are typically in

excess of six tons. Basically, the heat exchanger can be held in place either by installing a rigid column support structure or by employing tension elements (ropes) in the bin, as shown in Fig. 5.3. The use of tension elements is recommended because of ease of installation and the low cost and long life of the materials used.

Ropes

The ropes should be anchored securely to the ceiling and floor of the storage bin and should be installed under tension to accommodate anticipated stretch when the system is loaded. Each rope element must be capable of supporting a 300-lb load, with a safety factor of 10 or more. Polypropylene ropes of 1/2-in. nominal OD and a test strength of 4200 lb have been used successfully in a demonstration ACES. Fasteners for attaching the heat-exchanger tubing to the support ropes should be of a corrosion resistant material, such as copper or brass, coated with an epoxy-base paint. Rope thimbles should be used at the highly loaded floor-attachment point. The spacing between the rope supports depends upon the material used for the heat-exchanger coils. If the coils are of 1-in.-OD PVC tubing, the rope elements should be spaced not more than 70 in. apart in order to reduce the likelihood of coil rupture in the event of an ice log fracture.

Ballast

After the liner has been installed, a low-cost, concrete slab can be poured over a sand pad that covers the liner floor. The concrete slab serves as the bin floor and also provides the weight (ballast) for keeping the ice log submerged in the bin. Precautions must be taken to protect the liner during the floor-casting process, and the liner should be tested carefully for leaks after the job has been completed. The weight of the concrete ballast, when submerged in water, must be sufficient to counteract the buoyant force acting on the ice at storage-capacity volume. The maximum, or design, ice volume is equal to the wetted volume of the storage bin multiplied by the ice packing fraction.

ORNL-DWG 79-16648

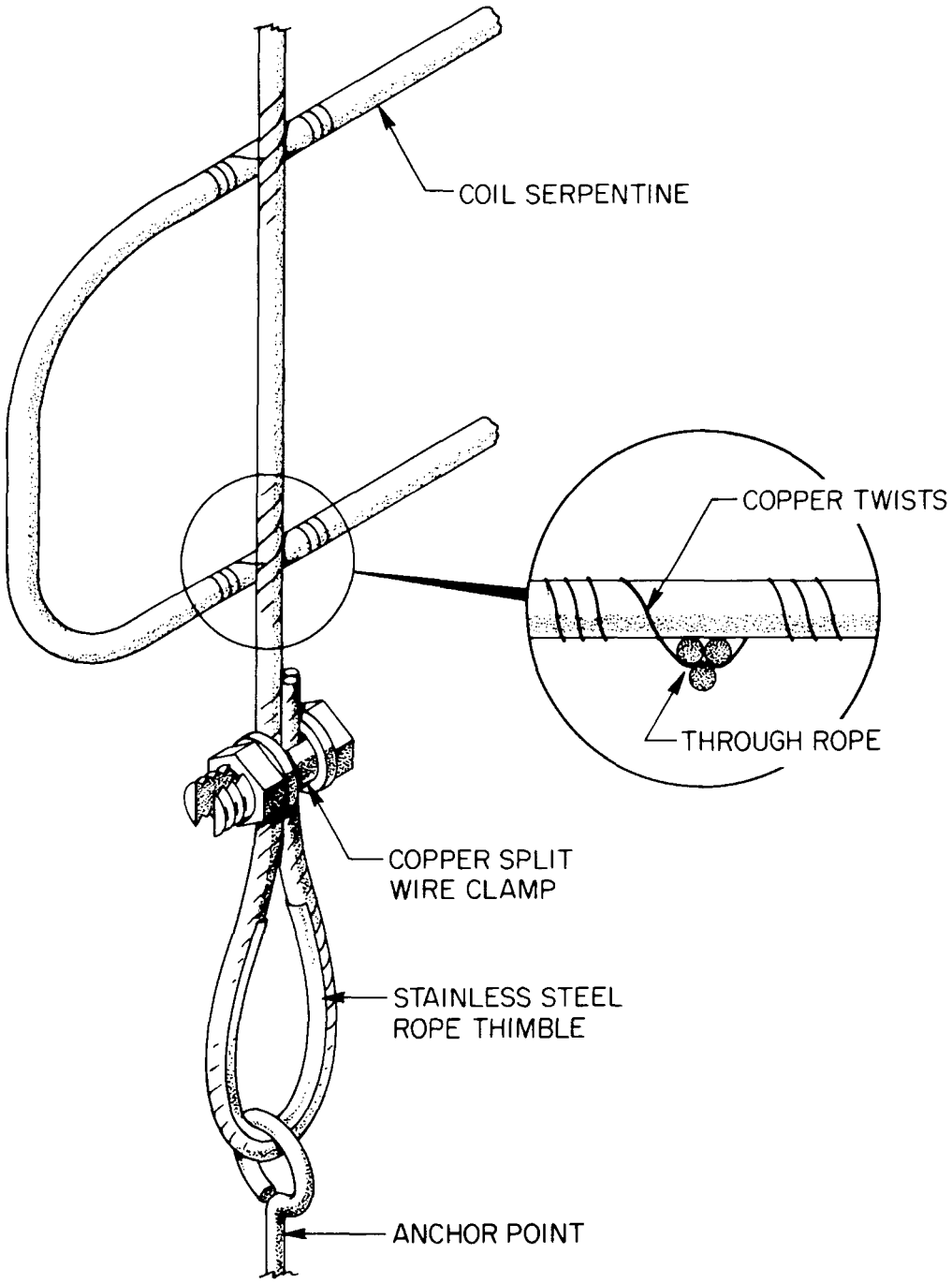

Fig. 5.3. Detail of proposed coil support structure for ice-bin heat exchanger.

The volume of concrete ballast required to counteract the buoyant force acting on the design ice volume is obtained from the following relationship:

$$V_C(\rho_C - \rho_W) \geqslant PF \cdot V_{WET}(\rho_W - \rho_I) \ , \tag{5.1}$$

where

V_C = required volume of concrete ballast, ft^3;
V_{WET} = wetted volume of bin at maximum ice inventory, ft^3;
PF = ice-packing fraction, 0.80;
ρ_C = density of concrete, 145 lb/ft^3;
ρ_W = density of water, 62.4 lb/ft^3;
ρ_I = density of ice, 57 lb/ft^3.

Solving Eq. (5.1) for V_C and inserting the given values of the parameters shows that the concrete ballast should have a volume equal to or greater than 5.2% of the wetted volume of the bin. A concrete ballast volume that is equal to 6% of the maximum wetted volume of the bin is recommended.

Water-fill level

After installation of the ice-bin heat exchanger and its support structure, the bin is partially filled with water. The volume of the initial water inventory should be selected such that, as the water freezes and expands during ACES operation, the remaining water in the bin will gradually rise to a level corresponding to the maximum wetted volume of the bin. To meet this requirement, the initial water inventory, V_W (in ft^3), must satisfy the expression:

$$\rho_W \cdot V_W = PF \cdot \rho_I \cdot V_{WET} + (1 - PF) \cdot \rho_W \cdot V_{WET} \ , \tag{5.2}$$

where the nomenclature and values of the variables are as described previously. The maximum wetted volume required for a given ACES application may be obtained directly from Table B.2 of the Appendix or calculated by the designer, using Eq. (2.22).

Solving Eq. (5.2) for the initial water-fill volume yields:

$$V_W = \frac{PF \cdot \rho_I + (1 - PF) \cdot \rho_W}{\rho_W} V_{WET} \cdot \tag{5.3}$$

Inserting the listed values of the parameters for a brine-chiller ACES into Eq. (5.3) shows that the initial water inventory should be equal to 93% of the maximum wetted volume of the bin. If more than this amount of water is charged into the system, the water at maximum ice inventory will rise beyond its design level and may overflow.

5.1.7 Bin internal-assembly for ice-maker system

The bin internal-assembly for an ice-maker ACES is much simpler than that for a brine-chiller ACES because of the absence of a bin heat exchanger and support structure. The only internal-assembly required in an ice-maker storage bin is a floor grating to protect the bin liner from possible damage by falling ice. This greatly simplified internal structure represents the major advantage of the ice-maker concept. The concept does, however, pose the special problem of achieving uniform ice-distribution within the bin. Because the ice is dropped into the bin from one location, ice mounding may occur, reducing the effective storage capacity of the bin.

Ice distribution

Ice mounding can be prevented either by constructing a deflector grid beneath the plates of the ice-maker heat pump, or by floating the ice in the storage bin. At the present time, experience with ice-maker systems is insufficient either to assess the magnitude of the problem caused by ice mounding or to identify the best means of coping with it. Floating the ice appears to be a feasible method of achieving uniform ice distribution in an ice-maker bin. The bin is initially filled with water to a level that allows the ice particles to float easily to all portions of the bin, reducing or delaying the occurrence of ice mounding until the final stage of ice accumulation. Although attractive because of its simplicity, the

ice-float method requires further testing to determine its effectiveness in large ice bins.

Water-fill level

The initial water inventory for an ice-maker storage bin is determined from Eq. (5.3) using an ice-packing fraction (PF) equal to 0.40. The equation shows that the initial water inventory of the ice-maker bin should be equal to 96.5% of the maximum wetted volume of the bin. That is, the bin should be filled with water to an initial depth that is equal to 96.5% of its design maximum depth.

5.1.8 Alternative storage bins

Integrated bin construction

Although the recommended ACES storage bin is a free-standing structure, it is possible to reduce construction costs by utilizing structural elements of the building as part of the storage bin. For example, foundation basement walls may be used to form two or more sides of the bin, and a planned garage or patio floor may be used as the bin top. When structural elements are used to perform dual functions, care must be taken to assure that the bin is designed to withstand the large hydraulic loads that occur when it is filled with water, as well as other external loads. When applicable, integrated design and construction is an effective method of reducing bin costs.

Modular construction

Factory assembly of modular ice bins offers the possibility of significantly reducing bin costs. Insulated bin modules can be constructed in standard, transportable sizes, as septic tanks are today. If insulated, 500-ft^3 modules were available, units could be assembled to meet the bin storage-capacity requirements of most ACES designs. Currently, however, prefabricated bin modules for the ACES are not available. Today, the modular construction of the ACES storage bin is accomplished by using units designed for other purposes, such as septic or transformer tanks, modified to ACES specifications. Modular storage bin construction, consequently,

is applicable for use with the ACES only in cases where small bin sizes are adequate.

5.2 Ice-Bin Heat Exchanger

The ice-bin heat exchanger delivers heat to the evaporator of the heat pump at a rate that allows the heat pump to operate at design conditions. This function can be performed either by designing the system for direct expansion of the refrigerant in the coils of the heat exchanger, or by providing an intermediate heat exchanger (using brine as the heat-transfer fluid) between the refrigerant and water media. Although applicable in small systems, direct expansion is not recommended for the ACES because of the significant problems that are introduced: (1) the need for complex refrigerant systems, (2) increased refrigerant inventories, (3) compressor oil migration, and (4) the added complexity of interconnecting the solar-collector ice-melt circuit.

5.2.1 Coil configuration of heat exchanger

The recommended coil configuration of the ice-bin heat exchanger is shown in Fig. 5.4. This coil arrangement utilizes the bin volume efficiently and is relatively easy to install. The materials selected for the ice-bin heat exchanger should be compatible with a water and brine environment and should have an expected useful lifetime of at least 20 years. Because of its low cost, heat-set PVC plastic is recommended for all tubing, manifold headers, and valves of the heat exchanger and for all connective piping of the brine circuit. If desired, the flat-design horizontal tube serpentines can be constructed as single units that can then be installed and interconnected in the bin. The completed heat-exchanger assembly must satisfy the minimum coil length and parallel flow path requirements of the ACES design.

Other coil configurations may be used if they offer advantages in a particular ACES application. Vertical tube arrangements, with the tubes acting either as columns or attached to the ballast block to form tension elements, offer the same high ice-packing fraction as the horizontal tube arrangements. The grid spacing and structural support for

ORNL-DWG 79-16649

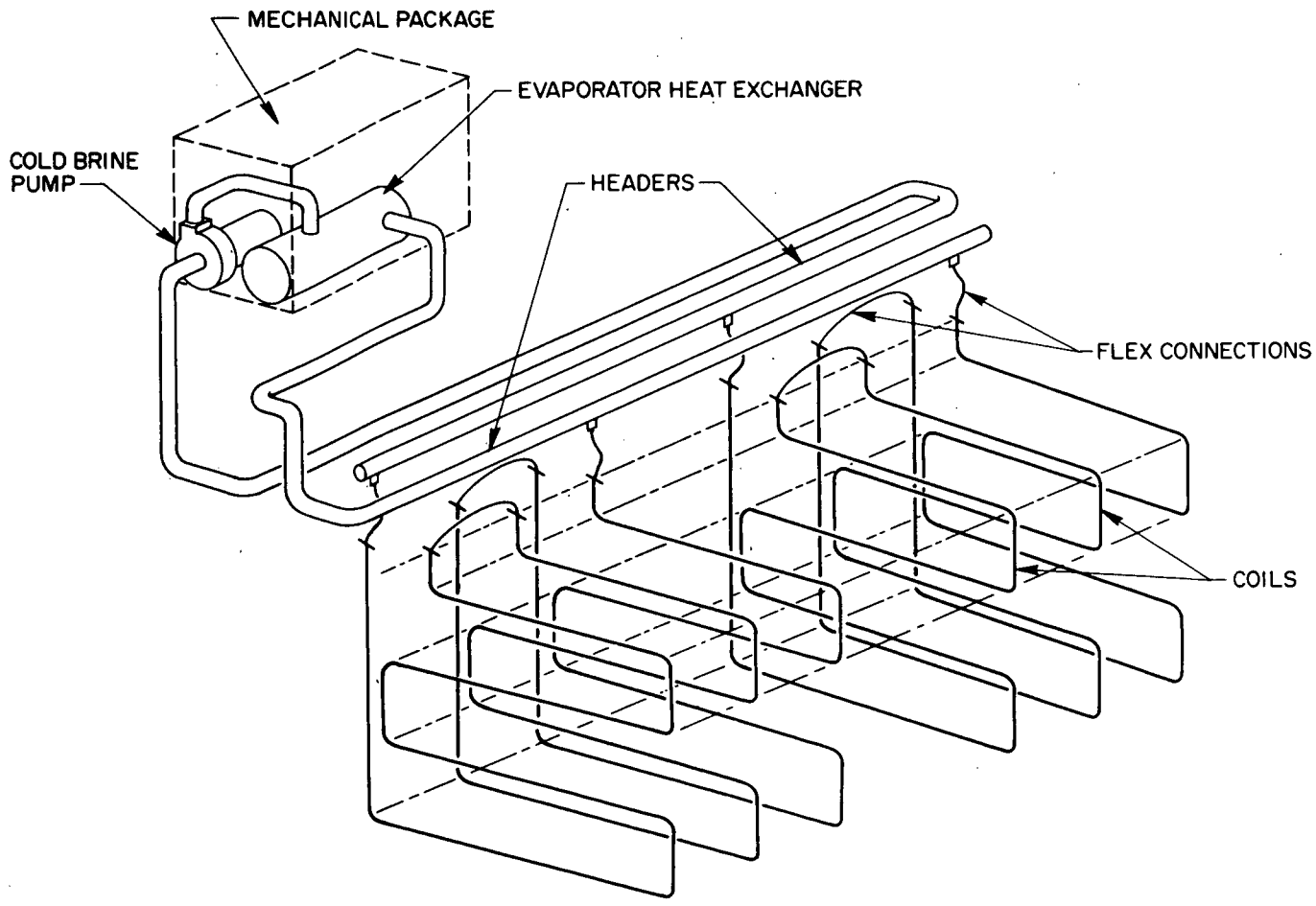

Fig. 5.4. Proposed installation of ice-bin heat exchanger.

vertical tube heat exchangers must be designed to accommodate the expected thermal and buoyant loads. Helical coils also offer excellent space utilization within each module, but the ganging of small numbers of large modules can significantly reduce bin utilization, requiring a larger bin volume for a given thermal storage capacity.

5.2.2 Prefabricated coil modules

Factory manufacture of planar serpentine coil modules would greatly simplify the onsite assembly of the ice-bin heat exchanger and also offer the prospect of reducing costs. The availability of conveniently sized serpentine coil panels, about 8 by 8 ft., would reduce site work to the mounting and interconnection of piping. This panel size is convenient for manufacturing, handling, and shipping. Structural tension ropes or other supports could be attached to the coils at the factory. Currently, prefabricated coil modules for the ACES ice-bin heat exchanger are not commercially available.

5.3 Corrosion and Water Treatment

5.3.1 General considerations

Measures to prevent corrosion and to retard biological growth are of vital importance to all heating and cooling systems, particularly a long-lifetime system such as the ACES. Impurities that could cause corrosion are present in the ACES recirculating brine system and tend to concentrate in the water storage bin as a result of the freezing process and evaporative loss to the air. Both corrosion and biological growth can reduce the heat-transfer rates of the system heat exchangers, adversely affecting the performance of the ACES. Corrosion also can cause a reduction in equipment lifetime. The subject of corrosion prevention is exceedingly complex and can be dealt with here only in the most general terms. The reader should consult other sources for a more thorough discussion of this important subject.[1,2]

Materials selection

The most effective method of corrosion prevention is the selection of component materials that have high corrosion resistance to the service environment. For the ACES, PVC plastic is the recommended material for all tubing, manifold headers, valves of the ice-bin heat exchanger, and all connective piping of the brine circuits. The complete heat pump mechanical package, however, with its valves, pumps, and heat exchangers, will almost certainly contain aluminum, copper, steel, or other metals selected at the factory. Corrosion within the brine circuits can be controlled by adding specific inhibitors and by designing components such that half of their wall thicknesses can be sacrificed during the expected system lifetime. General corrosion rates of 1 mil/year should be provided for in the component design.

Monitoring

The water in the ice bin should be inspected periodically for clarity and odor. If unsatisfactory conditions are found, the bin should be recharged with fresh water. A biocide should be added to the water annually to retard the growth of biological organisms. Corrosion monitoring is advisable also. Routine inspection of removable test tabs of metals from which the system components have been constructed that have been placed in the water and brine circuits should help to reveal corrosion problems before they become serious. If problems are encountered, the advice of a corrosion specialist should be sought and followed. Specific corrosion-prevention measures based on an analysis of the local finished water may be required.

5.3.2 Ice-bin water treatment

Treatment of the ice bin water is necessary primarily to control the growth of microorganisms such as bacteria, slimes, fungi, and algae. Any of a number of biocides can be used effectively. A simple method that has been used successfully in a demonstration ACES is to add about 1/2 gal of a 5 to 8% sodium hypochlorite solution to each 1000 ft^3 of water

contained in the bin. The pH of the water should then be adjusted to about 7.5 by adding hydrochloric acid. Sodium hypochlorite is readily available (e.g., "Clorox"). Corrosion of bin components is largely eliminated by the use of PVC plastic instead of metallic materials. The few metallic components in the bin — coil fasteners, rope thimbles, and anchor bolts — should be coated with an epoxy-base paint to make them corrosion-resistant.

5.3.3 Brine treatment

The addition of chemical reagents to the ACES brine circuits is also recommended for reducing corrosion and biological growth. Although the optimum corrosion-protection system depends upon a detailed analysis of the local finished water, the following brine additives will furnish adequate protection against corrosion and biological growth for most water supplies:

- 1000 ppm of sodium nitrate–sodium tetraborate, as a corrosion inhibitor for aluminum and iron;
- 500 ppm of sodium metasilicate, as a dispersant, stabilizer, and corrosion inhibitor;
- 5 ppm of toluoltriazole, as a corrosion inhibitor for copper;
- 30 ppm of polyoxyethylene(dimethyl-limino)ethylene(dimethyl-limino)-ethylene dichloride, as a biocide;
- boric acid, to adjust the pH of the corrosion protection system to 7.5.

Most of the above reagents can be obtained from commercial sources under various trade names. A successful protection system for the brine circuits of a demonstration ACES was achieved by using the following products:

- "Calgon CS," mixed at a ratio of 0.84 lb/100 gal of brine, as a corrosion inhibitor for aluminum and iron;

- "Zimmite ZC-404," mixed at a ratio of 0.43 lb/100 gal of brine, as a dispersant-stabilizer, which also contains a copper inhibitor;
- "Zimmite Chemtrol 19," as a biocide;
- boric acid, to adjust the pH range for the protection system to 7.5 to 8.0.

"Calgon CS" is produced by the Calgon Corporation of Pittsburgh, Pennsylvania, and the Zimmite products are produced by the Zimmite Corporation of Cleveland, Ohio. It is noted that reference to a particular company or product name does not imply approval of this product to the exclusion of others that meet specifications.

5.4 Solar Collector Panel

The ACES outdoor panel collects both convective and radiant energy from the environment. In most of the United States, a significant portion of the energy is collected by convective heat transfer from the ambient air to the 32°F brine or water that serves as the energy transfer fluid. The panel recommended for use with the ACES is an unglazed, commercially available, flat-plate collector of the type used in swimming-pool solar heating systems. The panel should be mounted so that air can circulate freely on both its top and bottom surfaces, making both sides effective convective heat-collection areas.

5.4.1 Panel installation

The panel should be positioned where it is exposed to the sun and prevailing winds, and should be tilted southward to enhance solar energy collection. For optimum heat collection during the winter, the panel should be oriented facing the southern sky, tilted at an angle from the horizontal plane that is equal to the latitude of the location plus 20°:

$$T = \text{latitude} + 20° \ .$$

In actual installations, the orientation angle can be varied slightly, without a major loss in performance, to facilitate panel installation, improve building aesthetics, or to better utilize available roof areas.

Individual sections of the panel should be interconnected to provide parallel flow paths for the energy transfer fluid. Parallel flow paths are required to achieve a reasonable brine flow through the panel with a pressure drop that is compatible with the brine pumps being used [see Eq. (4.11)]. High flow rates are desirable to reduce the temperature rise of the heat-transfer fluid within the system. All interior piping to and from the panel should be insulated with closed-cell rubber insulation material. The panel should not be installed in a location where it is shaded by adjacent buildings or trees. Although the roof or south side of a building are the preferred locations, the panel may also be installed as a free-standing solar fence.

5.4.2 Use of panel to reject waste heat

The convector panel, sized and installed to melt ice during the winter, can also be used for summer waste-heat rejection. The specific equations describing operation of the panel as a waste-heat rejector are given in Sect. 4.6. An outdoor fan coil is recommended for use as a waste-heat rejector for the ACES because: (1) the fan coil is less expensive than a panel convector for a given heat-rejection capacity and (2) the outdoor fan coil offers greater operational flexibility because it can be operated at any time of the day, whereas the panel can be operated as a heat rejector only during the night.

5.4.3 Freezing protection

The brine in both the solar collector panel and the outdoor fan coil is exposed to outdoor ambient air temperatures. For this reason, the freezing point of the brine must be well below the expected local minimum temperature. Table 4.3, in Sect. 4.3.3, lists the freezing points of several brine compositions. The table shows that the viscosities of ethylene glycol and propylene glycol brines increase with the glycol concentration. If these brines are used, the selection of compositions with very low freezing points results in higher pumping-power requirements. The collector panel circuit must be designed with parallel brine flow

paths, as described in Sect. 4.3.3, to prevent the circuit pressure and the pumping power requirements from becoming excessive.

5.4.4 Energy transfer fluid

In principle, either water or brine can be used as the fluid medium for transporting the heat collected by the solar panel to the ice bin. Brine is the preferred heat-transfer fluid, even though its use requires a heat exchanger in the ice bin, because it affords protection against component damage caused by freezing.

In the case of a brine-chiller ACES, the ice-bin heat exchanger already in the system design can be used for delivering heat from the solar panel to the ice bin at no additional cost; brine is the recommended energy-transfer fluid.

Because the use of water simplifies system design, it is the preferred heat-transfer fluid for an ice-maker ACES. The water can be pumped from the bin directly to the panel and then returned by a simple drainage circuit. The use of water eliminates the need for an ice-bin heat exchanger and avoids the design problems of protecting such a unit against damage from falling ice. If water is used as the heat-carrying medium, however, the need to provide the solar collector panel with a fail-safe freeze-protection system becomes acute. A water-evacuation system must be provided that employs either gravity or positive pressure and is activated, without fail, whenever the temperature of the panel fluid falls below a critical level. Further research is required before specific recommendations can be made for a freeze-protection system for solar panels employing water as the heat-transfer fluid.

5.4.5 Brine system venting

Vapor trapping within brine circuits can cause significant reductions in the active heat-exchanger tubing length and must be avoided by providing a means for venting the system. All piping containing the brine solution should be arranged so that vapor will collect at points that can be easily vented by release through valves. The vent system should be constructed of 1/4 in. copper or plastic tubing routed from the vapor collection points

to a convenient access location. Brine systems should have expansion tanks capable of holding 2 to 5 gal of liquid to allow for volumetric expansion of the brine caused by seasonal variations in temperature.

5.4.6 Solar panel alternatives

In most regions of the country, the use of a flat-plate, unglazed collector panel is a low-cost means of gathering the environmental energy needed to melt excess ice. The unglazed solar panel is very efficient because it collects both radiant and convective energy at relatively low temperatures. In some northern locations, however, the greatly reduced heat-collection capability of this type of panel may require the use of excessively large panel areas. The unglazed panel can be replaced by conventional solar panels of either single- or double-glazed construction in such instances. Determining the size of the solar panel for the ACES requires knowledge of the monthly heat-collection capacity of the panel chosen. This information can be obtained either from the performance curves provided by the manufacturer or by conventional methods for estimating solar energy collection.

In addition to the possibility of using glazed solar panels, other methods for collecting from the environment the energy necessary for melting excess ice in the bin can, and should, be considered. These methods include the use of a ground-source heat-collection loop, the use of a heat pipe, and the off-duty use of the heat pump to collect heat from the ambient air for delivery to the ACES ice bin. Currently, only preliminary investigations of these methods have been made, a detailed discussion of which is beyond the scope of this report.

5.5 Conventional Components and Sensors

5.5.1 Pumps and fans

The pumps and fans employed consume approximately 20% of the total purchased energy required by the ACES. If care is not taken to select efficient units, this figure could rise to over 30%. Pumps exhibit a wide range of wire-to-water efficiencies, from as low as 7% to as high

as 35%. The performance of fans varies widely depending on design and operating conditions. Fans should not be operated beyond their design speeds and all air ducts should be large enough so that pressure restrictions in airflow are not created. Careful attention must be given also to the installation and operation of these conventional components if the high performance potential of the ACES is to be realized.

5.5.2 Piping and filtration

The interconnective piping within the ACES should be sized to impose a low pressure drop on the pumping system and to yield fluid flow velocities of 3 ft/s, or less. All pipes should be insulated with closed-cell rubber insulation to prevent condensation of moisture on them. The piping should be installed such that individual sections of the brine circuits can be isolated, or blocked off, from one another. This capability can simplify the replacement of filters and facilitate the repair of system leaks, should they occur. Headers comprised of 1.5- to 2.0-in.-diam. plastic pipes are satisfactory for most ACES applications.

Each brine circuit should be equipped with a full-flow filtration device capable of filtering particulate matter as small as 25μ in diam. Filtration is necessary to prevent the accumulation of foreign matter, rust, dirt, etc., which could impede the normal operation of pumps and valves or lead to component failure. The pressure drops across the filtration devices must be included when estimating the total pressure against which the pumps must operate. The filters should be inspected periodically and replaced when necessary.

5.5.3 Thermostats

The ACES should be equipped with standard thermostats of the type used with conventional air-source heat pump systems. The thermostats should have a dead band and reaction-time constants such that the system will not cycle more than three times an hour during normal operation. Setback thermostats should be used only if the heat pump has a heating capacity sufficiently high to provide rapid recovery of the room air temperature.

5.5.4 Ice inventory sensors

The ACES ice inventory sensors must be able to detect at least four conditions: (1) no ice present in the bin, (2) an ice inventory equal to 95% of bin design capacity, (3) an ice inventory equal to 105% of bin design capacity, and (4) elevated bin temperature (above 36°F). This information, together with time-of-year signals from a calendar clock, provides the control system with information for making logic decisions that will direct the systems operation. The ice-inventory sensor may consist of separate conductivity probes positioned in the ice bin, or it may be a single device that produces an output signal that is proportional to the stored ice inventory. The applicability and use of these types of sensors are discussed in Sect. 6.

A standard thermostat can be used to detect elevated bin temperature, but monitoring water level in the ice bin is more difficult. In brine-chiller systems, where the ice is submerged, conductivity probes can be used to detect rises in the water level. Conductivity probes can also be used with an ice-maker system, where the ice floats in the water, but the relationship between ice inventory and bin water level is nonlinear. Other inexpensive and reliable methods for sensing the stored ice inventory may be devised and used in future ACES application.

5.5.5 Hot water storage tank

The size of the hot water storage tank should be selected either to satify a known hot water demand or on the basis of the anticipated number of occupants in the building. As a general guideline, 20 gal of storage capacity is required for each adult occupant of the building and 15 gal for each child.

In advanced ACES designs, discussed briefly in Sect. 6, addition of the capability for short-term, hot and cold storage to the system may be economically advantageous. A diurnal energy storage tank located inside the building would be of sufficient size to supply the space-heating or space-cooling needs of the building on a typical day. A full discussion of the design requirements of such a storage tank is beyond the scope of this report.

REFERENCES

1. American Society of Heating, Refrigerating, and Air-Conditioning Engineers, Inc., *ASHRAE Handbook and Product Directory: 1976 Systems*, ASHRAE, New York, 1976.

2. Carrier Air-Conditioning Company, *Handbook of Air-Conditioning System Design*, McGraw Hill, New York, 1965.

6. CONTROL AND OPERATING STRATEGIES

The ACES controller is a device programmed to actuate electrical components of the system in response to signals from sensors that monitor indoor air, outdoor air, and hot water temperatures, solar radiation, and the water temperature and ice inventory of the ice storage bin. The controller integrates these signals with time signals from a 365-day calendar clock and actuates solenoid valves and relays that cause the system to respond to demands for space heating, water heating, and space cooling. The controller directs operation of the solar collector panel during the ice phase to achieve production of the design ice inventory without at any time exceeding the storage capacity of the bin. During the supplemental phase, the controller actuates the heat pump compressor to reject heat from the storage bin to lower the temperature, as needed, for air conditioning.

Thus the design and construction of the ACES control logic package requires a high level of expertise in computer technology and is best left to manufacturers skilled in this field. As the market for residential ACES develops in the United States, control logic packages for the system should become commercially available. If this proves to be the case, the ACES designer will not require detailed knowledge of the device but only a familiarity with its primary functions and design objectives. The following sections of this chapter describe these functions and the operating strategy required for a large-bin, brine-chiller ACES having a solar panel to achieve maximum interseasonal energy transfer.

6.1 Control Objectives

6.1.1 Operating strategy

The requirements of an electronic package for automatic control of a residential ACES are best described by looking at a specific example. For this purpose, we consider a full ACES of the brine-chiller type that might be installed in the central United States. This ACES has a large storage bin and a solar collector panel for melting ice as the storage

capacity of the bin is approached or exceeded. Although the bin is large enough to store enough ice to satisfy all of the house cooling needs for an average weather year, higher than average cooling-load years will require the system to operate in the supplemental phase for at least limited periods of time. The example ACES is provided with a backup heating system consisting of electric resistance heating elements installed in the house air ducts.

As with all ACES, energy transfer is effected by an electrically driven unidirectional heat pump that obtains heat from water stored in an insulated underground bin. As the heat is extracted during the heating season, ice accumulates in the bin and is stored. The stored ice is used to provide air conditioning in the cooling season by using its heat of fusion as a heat sink. After the stored ice has been exhausted, the heat pump compressor is operated to chill water in the bin to meet any additional space-cooling needs. Thus, heat collection by the solar panel during the winter and bin-heat rejection by the compressor during the summer serve to augment the heating and cooling storage capacity of the bin. Figure 6.1 illustrates the annual operations of the example ACES, detailing time-dependent functions — ice inventory, and bin water temperature.

6.1.2 Heating season operation

The ice phase of annual operations for the example ACES (Fig. 6.1) begins on November 1. During November the temperature of the bin water gradually declines to 32°F as heat is extracted from the bin to provide space and water heating to the house. By the end of November all the sensible heat of the water has been extracted and ice formation begins. The system must supply house demands for space heating and water heating, and the solar panel must be operated to melt ice, as shown by the bar graphs at the top of Fig. 6.1. The controller must establish the priority of heat deliveries to be such that space heating and water heating are supplied simultaneously when both are demanded, but that if space-heating needs cannot be met, as would be indicated by the second stage of the house thermostat, the delivery of the water-heating load is delayed.

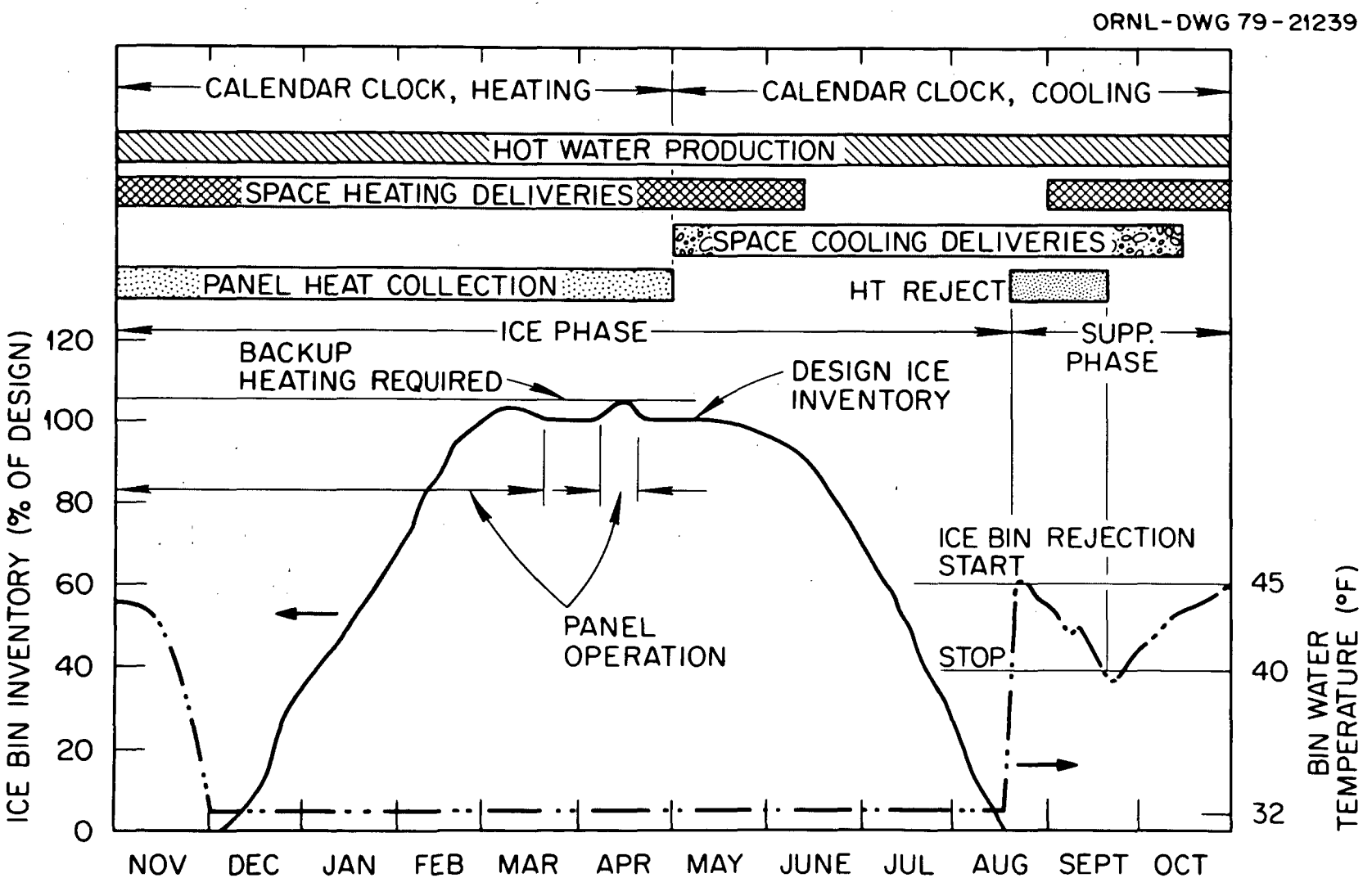

Fig. 6.1. System operating and control functions.

During the heating season the calendar clock switch is in the "select winter" position, denoted by S_{SW}, allowing the solar panel to operate when outdoor weather conditions permit and when ice melting is necessary. When the calendar clock switch is in the "select summer" position, the solar panel may not operate to melt bin ice. The objectives of ice-inventory control during the winter season are to ensure that the ice inventory will never exceed 105% of the bin design storage capacity and to achieve the ice-growth curve expected for an average weather year. For an average weather year, ice inventory is controlled through the operation of the solar panel to melt ice whenever outdoor ambient heat can be collected. For a low heating-load year, however, panel operation must be interrupted intermittently to allow the ice inventory to reach the value expected for the given time of year.

The operation of the solar collector panel is regulated to achieve the ice-growth curve estimated for an average weather year. Actual ice inventory is compared at daily intervals with that for the reference year. This comparison can be made automatically by the controller on the basis of signals provided by an ice-inventory sensor at specific scanning times. The sensor can either be a continuous ice-level indicator or a series of conductivity probes positioned at fixed intervals in the bin to indicate ice levels. If the scan reveals an ice inventory greater than or equal to that expected for the given time of year, the solar panel is operated throughout the next scan interval. If the ice inventory is below that expected, however, ice-melt operations are stopped during the next scanning interval.

During high heating-load years, the solar collector panel is operated continuously throughout the heating season, as outdoor weather conditions permit, to melt excess ice in the storage bin. Because of its limited heat-collection capacity, however, the panel will be unable to prevent the attainment of an ice inventory exceeding the design storage capacity of the bin. To protect the bin against possible damage, an ice-inventory sensor must be provided to indicate when 105% of the bin design storage capacity is reached, whereupon further operation of the heat pump compressor must be halted; the backup space-heating system is used to meet

house space-heating demands. This condition also calls for continuous operation of the solar collector panel for melting excess bin ice. Only when the ice inventory has been reduced to the expected reference-year level is ACES operation resumed.

6.1.3 Cooling season operation

For the example ACES shown in Fig. 6.1, the calendar clock switch reverts to the "summer select" position on May 1 and the solar collector panel is not operated after this date. Space-cooling demands then take precedence over space-heating demands, as the bar graphs in Fig. 6.1 indicate, and the ice inventory begins to decline. By mid-August all of the ice inventory has been exhausted, but the chilled water in the storage bin still serves as a heat sink for the house space-cooling loads. The continuing space-cooling loads of the house raise the temperature of the bin water to 45°F, and the system enters the supplemental phase of its annual cycle. Beyond this point further cooling-load deliveries to the house can be made only if the heat pump compressor is operated to produce chilled water. Operation of the system in the bin heat-rejection mode is directed by the controller in response to signals from the bin water thermostat. Compressor operation is initiated when the water temperature reaches 45°F and is stopped when the water temperature falls to 40°F. The heat removed from the storage bin is rejected to the environment by an outside air coil or delivered to the house to meet space-heating or water-heating demands.

6.2 Control Package Logic

6.2.1 Input signals

For the example residential ACES described above, the following sensors send signals to the controller:

T_{hw} — Thermostat for controlling the hot water temperature to a range of 120° to 125°F. Signal is 1 if a call for water heating exists.

T_{rh1} – First stage of room thermostat for controlling the indoor temperature to a range of 69 to 71°F during the heating season. Signal is 1 if a call for space heating exists.

T_{rh2} – Second stage of room thermostat. Signal is 1 if the system is able to accommodate simultaneous calls for space heating and water heating.

T_{rc} – Thermostat for controlling the indoor temperature to a range of 77 to 79°F during the cooling season. Signal is 1 if a call for space cooling exists.

T_{odw} – Outdoor winter air temperature thermostat. Signal is 1 if the temperature is 32°F or greater.

T_{ods} – Outdoor summer air temperature thermostat. Signal is 1 if the temperature is 85°F or less.

T_{bin} – Thermostat for controlling the bin water temperature to a range of 40 to 45°F during the supplemental phase. Signal is 1 if a call for bin heat-rejection exists.

I – Ice-inventory indicator. Signal is 1 if the ice inventory equals or exceeds 105% of the bin design storage capacity.

S_{sw} – Calendar clock select switch position. Signal is 1 if the switch is in the "select winter" position.

6.2.2 Output signals

Component signals

In accordance with programmed logic instructions, the controller delivers the following signals to actuate system components:

C – Relay for actuating compressor. Signal is 1 for on.

P_{cb} – Relay for actuating cold brine pump. Signal is 1 for on.

P_{hb} – Relay for actuating hot brine pump. Signal is 1 for on.

P_{hw} – Relay for actuating hot water pump. Signal is 1 for on.

F_{id} – Relay for actuating indoor fan motor. Signal is 1 for on.

F_{od} – Relay for actuating outdoor fan motor. Signal is 1 for on.

B_h – Relay for actuating backup heating system. Signal is for on.

Valve signals

In addition to directing the operation of the above components, the controller must be programmed to provide output signals for actuating the appropriate valves to establish the flow paths of hot brine, cold brine, and hot water that are required for each mode of system operation. For example, upon receiving a bin ice-melt signal, the controller must actuate valves that place the cold brine path through the solar collector panel in series with the ice-bin heat exchanger. Similarly, hot brine must be circulated through the indoor fan coil when a space-heating call is in effect, and cold brine must be circulated when a space-cooling call is received. For simplicity, controller output signals and actions are omitted from the following discussion of control logic equations for the example ACES.

6.2.3 Control logic equations

The conditions under which each component of the system is actuated by the controller are described below. These conditions, stated as logic equations, form the basis of the programmed instructions to the controller. In the logic equations, output signals from the controller written without an upper bar symbol denote that the component is actuated. Similarly, input signals to the controller written without an upper bar denote that a signal value of 1 has been received. For example, (C) denotes that the compressor is operating, and ($\overline{C}$) denotes that it is not operating. Symbols expressed as products should be read "and," those expressed as sums should be read "or." These logic equation conventions are illustrated by:

$$W = (X)(\overline{Y}) + Z \ , \tag{6.1}$$

which should be read, "The output signal W from the controller is 1; that is, component W is actuated, whenever X is 1 and Y is 0, or Z is 1. This notation can be used to express the conditions of operation for the ACES components as follows:

1. The compressor C is to operate whenever space heating is called for by T_{rh1} or water heating is called for by T_{hw} and the ice inventory has not reached 105% of the bin design capacity. The compressor is also to operate whenever the calendar clock switch is not in the S_{sw} position, bin heat rejection is called for by T_{bin}, and the summer outdoor air temperature is 85°F or less, as indicated by T_{ods}.

$$C = (\overline{I_{105}})(T_{rh1} + T_{hw}) + (\overline{S_{sw}})(T_{bin})(T_{ods}) \tag{6.2}$$

2. The cold brine pump motor is to operate whenever the calendar clock switch is in the S_{sw} position; the outdoor air temperature is 32°F or greater, as indicated by T_{ods}; and the ice inventory is equal to or greater than the inventory expected for the reference year at the given date, as indicated by I. The cold brine pump motor is also to operate whenever space cooling is called for by T_{rc} or whenever the compressor is in operation.

$$P_{cb} = (S_{sw})(T_{odw})(I) + T_{rc} + C \tag{6.3}$$

3. The hot brine pump motor is to operate whenever the calendar clock is not in the S_{sw} position, bin heat rejection is called for by T_{bin}, and the outdoor summer air temperature is 85°F or less, as indicated by T_{ods}. The hot brine pump motor is also to operate whenever space heating is called for by T_{rh1} and the ice inventory has not reached 105% of bin design capacity.

$$P_{hb} = (T_{rh1})(\overline{I_{105}}) + (\overline{S_{sw}})(T_{bin})(T_{ods}) \tag{6.4}$$

4. The hot water pump motor is to operate whenever water heating is called for by T_{hw} and T_{rh2} is 1, indicating that the water-heating load does not need to be shed.

$$P_{hw} = (T_{hw})(T_{rh2}) \tag{6.5}$$

5. The indoor fan motor is to operate whenever space cooling is called for by T_{rc} or space heating is called for by T_{rhl}.

$$F_{id} = T_{rc} + T_{rhl} \tag{6.6}$$

6. The outdoor fan motor is to operate whenever the calendar clock switch is not in the S_{sw} position, bin heat rejection is called for by T_{bin}, and the outdoor air temperature is 85°F or less, as indicated by T_{ods}.

$$F_{od} = (\overline{S_{sw}})(T_{bin})(T_{ods}) \tag{6.7}$$

7. The backup space-heating system is to operate whenever space heating is called for by T_{rhl} and the ice inventory equals or exceeds 105% of the bin design storage capacity, as indicated by I_{105}.

$$B_h = (T_{rhl})(I_{105}) \tag{6.8}$$

Controller design. Figure 6.2 shows how the above logic equations can be represented in a single logic diagram showing the necessary set of input signals that must exist for a given component of the system to be actuated. For an actual ACES, the logic diagram must include all of the controlled system components and all necessary input signals for setting their operating states. The construction of the control logic package requires design of the circuitry and the physical layout of the package. If desired, the controller may be provided with an LED (light emitting diode) display to indicate the condition of all input and output signals. Capability for the manual setting of all input signals should be provided so that the proper functioning of the controller can be determined by testing and checkout upon installation.

ORNL-DWG 79-21242

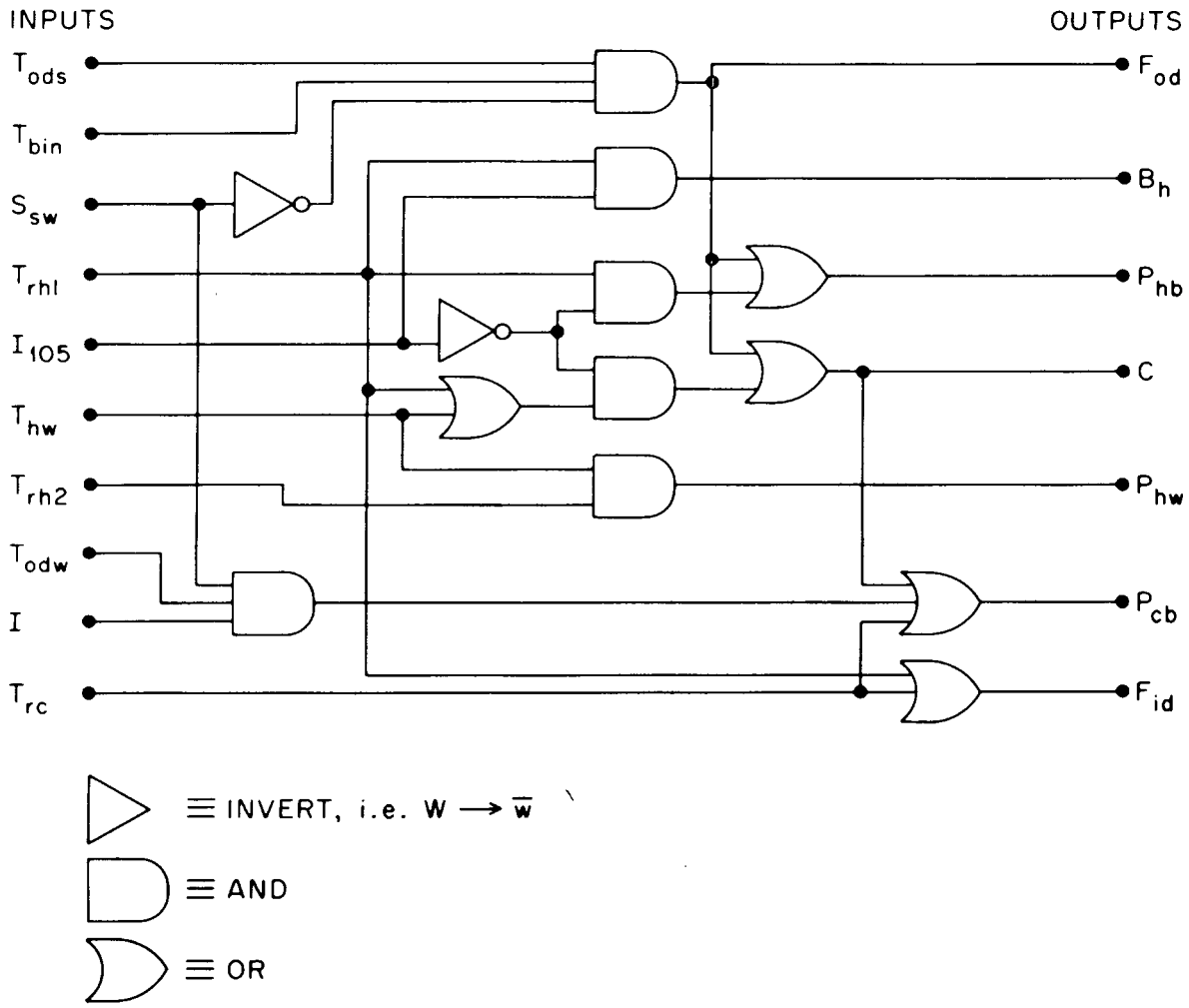

Fig. 6.2. Partial control logic diagram.

6.3 Control of Alternative ACES Designs

The controller described in Sect. 6.2 is for a full ACES that lacks sensible heat-storage capability and has not been optimally designed for diurnal cooling storage. A number of modifications to this design that may offer attractive benefits with respect to system performance and economics are possible, including the use of: alternative backup space-heating systems; alternative ice melting systems employing ground heat, heat from outside air obtained by heat pump operation, or heat from electric or fuel-fired heaters; and a small indoor tank to provide the system with low- and high-side storage capability, so that it can function more effectively as a load-management device. Any of these modifications to the basic ACES design requires corresponding changes in the design of the controller. This section discusses several variations in ACES design that would affect the control logic package.

6.3.1 Backup heating system

The basic objective of ACES design is to select system components that will supply thermal demands of a particular building occurring in an average weather year. Because of the 50-50 chance of any year having more severe weather than the reference year, the ACES must be provided with a backup system for supplying heat to the house or bin for use when the ACES design ice storage capacity is reached. A backup system for cooling — a bin heat rejection mode to produce chilled water — for use when the ice inventory has been exhausted is already provided in the ACES design.

Backup heating systems will be used most frequently in regions where large variations in year-to-year weather conditions occur. As discussed earlier, the backup heating system can either be a complete house-heating system or a system limited to supplying heat to the bin to melt ice. Satisfactory methods for controlling the ice level in the bin could consist of submerged electric resistance heaters, fuel-fired heaters, ice melting by the heat pump, or direct disposal of the bin ice and replacement with fresh water. All ACES demonstrated to date have employed backup systems that supply heat directly to the house. The use of backup systems for

delivering heat to the bin appears to offer simplifications in system design but has not yet been fully evaluated.

The recommended backup system for the ACES is electric resistance strip heaters installed in the air ducts of the house. This system is recommended because of its low capital cost and ease of installation. The backup system, whether it provides central or zone heating, should be controlled by a multistage thermostat. The thermostat should be one that can be operated by a building occupant or one that the controller actuates automatically upon receiving a signal indicating a full ice inventory in the bin. The ACES controller must be capable of determining when conditions calling for backup heating exist and of actuating relays to prohibit further operation of the heat pump. Depending upon the backup system selected, the ACES controller may also be required to direct its operation.

6.3.2 Ambient heat collection

Solar collector panel

An alternative heat-collection strategy is the use of glazed solar panels to store as much sensible energy in the bin as can be collected during the early months of the heating season. The objective of this strategy is to maintain the bin at an elevated temperature until late winter to minimize use of the backup heating system. Toward the end of the heating season, the bin can either be allowed to freeze or it can be maintained without ice to provide chilled-water space cooling in the summer. Use of this type panel and operating mode also reduces the collector panel area required for a given ACES installation. However, the cost-effectiveness of this heat-collection system has not yet been demonstrated. The ACES controller must be provided with specific logic instructions for directing the operation of such a panel, if it is used.

Ground heat collectors

The use of an earth-source heat collector, either a heat pipe or an underground heat exchanger, represents an alternative method of collecting

ambient heat to melt ice in the storage bin. Neither of these methods has been tested in a demonstration ACES, but both offer the advantage of utilizing a heat source that is continuously available regardless of winter weather conditions. The logic equations for the controller will differ from those for an ACES employing a solar collector panel, which is prohibited from operating whenever the outdoor air temperature falls below 32°F.

Heat pump

Because the ACES is equipped with an outdoor air coil for summer heat-rejection, the heat pump itself can be used during the winter to collect ambient heat for delivery to the ice storage bin. Operating in this mode, the air coil delivers ambient heat to the unit, causing it to function as an air-source heat pump. The system can be designed to deliver the heat pump output either to the house for space heating or to the storage bin for melting ice. These alternative modes of heat pump operation during the winter make efficient use of existing ACES equipment and can either eliminate the need for a solar panel altogether or greatly reduce the size and cost of the panel. A complete discussion of the multi-use heat pump concept in the ACES and of the control logic package for directing its operation is beyond the scope of this report.

6.3.3 Load-management systems

The basic ACES designs described in this report can be modified to provide full load-management capability by providing, in addition to the ice storage bin, a small thermal storage tank having a large enough capacity to supply the heating or cooling needs of the building for several days. The tank should be located in a comfort-conditioned area of the building to eliminate heat losses and should be insulated to prevent the condensation of moisture on its surfaces. The heat exchanger in the small storage tank should be capable of delivering heat at a rate equal to the design hourly heat load of the house. The small tank would provide short-term high-side storage in the winter and low-side storage in the summer for use in regions where time-of-use power rates

are offered. The optimal size of the tank; the heat pump capacity; and the design of the tank heat exchanger, valves, piping connections, and the control logic package needed for a full load-management ACES are topics beyond the scope of this report.

7. ESTIMATION OF COSTS

7.1 Life-cycle Costs

In deciding whether or not to install an ACES, the homeowner needs to compare the anticipated costs of ACES ownership and operation with those of alternative heating and cooling systems. Operating costs consist of recurring cash outlays that must be made to operate and maintain the system during its useful life. For any electrically driven HVAC system, operating costs include all annual expenditures for electrical power and routine preventive maintenance, as well as unscheduled expenditures for necessary parts replacement and maintenance. Ownership costs consist of required annual payments for borrowed capital, investment equity, local property taxes, and property insurance. These annual ownership costs may be mitigated, depending upon the financial status of the homeowner, by federal income tax rebates received for interest paid on borrowed capital and for annual property tax payments.

The present value of the annual operating costs can be calculated by discounting each annual operating cost, finding its value at year zero, and summing the discounted cash values over the assumed (20-year) lifetime of the ACES. The present value of the annual ownership costs, calculated in a similar manner, is added to the present value of the operating costs to yield a value for the life-cycle cost of the system. In determining the present value of the ownership costs, any residual or salvage value that the system might have at the end of the assumed lifetime should be taken into account. In the case of an ACES, the ice bin probably will deteriorate very little, if at all, during a 20-year period. At the end of the 20 years, the bin can either continue to serve as an ACES component, or it can be converted into useful basement storage space. Thus, the bin will probably retain a high residual value, which when properly discounted may significantly reduce the present value of the ownership costs.

In summary, the life-cycle cost of a system represents the total investment required for acquiring the system and prepaying all annual

costs for electrical power, maintenance, property taxes, insurance, and interest on the capital investment for 20 years into the future. The life-cycle cost provides a fair means of comparing the economics of alternative heating and cooling systems. The most cost-effective system is the one having the lowest life-cycle cost. Unfortunately, the amount of computation required for a full life-cycle cost analysis is substantial and requires detailed knowledge of the buyer's financial status, of local property tax practices, and of local insurance rates. For this reason, a simplified approach for calculating the life-cycle cost of the ACES (described in Sect. 7.2) is preferred.

7.2 Simplified Life-cycle Cost Analysis

The calculation of the present value of the costs of owning the system is greatly simplified if the impact of income tax rates and annual charges for property taxes and insurance are neglected and if it is assumed that the system is purchased with equity funds. Under these conditions, the ownership cost is equal to the total installed cost of the system, net of its discounted salvage value. The operating cost of the system is obtained by summing the discounted annual costs for electrical power and system maintenance over the assumed lifetime of the ACES. The sum of the ownership and operating costs is the life-cycle cost of the system.

$$P = T + O \; ; \qquad (7.1)$$

where

P = present value life-cycle cost of the system;

T = total installed system cost, net of salvage value;

O = operating costs, discounted and summed over the study lifetime.

7.2.1 Installed cost

The initial cost of installing an ACES in a single-family residence will vary regionally according to the prevailing rates for labor and materials. Because these rates can be expected to rise with the rate of

general inflation, each component of a planned ACES installation must be costed according to the currently prevailing local economic conditions. The installed costs of the various components of the system can be estimated by either the ACES contractor or the interested purchaser and summed to obtain the total initial cost of the complete system. The installed cost of an ACES may be estimated using work form 7 and the instructions provided in Sect. 8.3.

A large first-cost item of an ACES is the heat pump mechanical package. The purchase price of the package will vary with its capacity rating, which should be selected to exceed the calculated design hourly heating load of the building by as little as possible. The purchase price of the heat pump mechanical package may be obtained directly from the manufacturer or from a local heat-pump dealer. The estimated charges that would be demanded by a local heating and air-conditioning contractor for installing the heat pump mechanical package and refrigerant lines must be added to its purchase price to obtain the installed cost of the unit.

A second large cost item of the ACES is the ice bin. The overall cost of the ice bin can be broken down into three categories: basic construction, thermal insulation, and waterproofing. The construction contractor or prospective ACES purchaser should determine the unit cost of materials (dollars per square foot) for each of these categories. These unit costs of materials should then be doubled or, based on the contractor's experience, multiplied by some other suitable factor to account for projected labor and installation costs. Based upon the required dimensions of the bin, an estimate of the installed cost of the ice bin can be calculated (see work form 7, in Sect. 8.3).

Unit costs for the ice-bin heat exchanger and the supplemental heat collector depend primarily upon the material used for the heat-exchanger coil and the type of collector panel (glazed or unglazed) being considered. When these design variables have been selected, the unit installed costs of the two components must be determined by consulting equipment suppliers. The total installed costs of the components can then be estimated by multiplying their unit costs, respectively, by their required sizes. In the case of the collector panel, an additional fixed cost should be added to

cover the costs of providing panel support structure, headers, and connective plumbing. The installed costs of auxiliary components such as the hot water tank, ACES control package, pumps, air ducts, etc., should be determined separately and summed (see work form 7, in Sect. 8.3).

7.2.2 Salvage value

Some ACES components may have longer useful lives than others. In particular, the ice bin and the air duct system will probably exhibit very little deterioration over the assumed 20-year life. If this is the case, these components will have residual value at the end of the period which, when properly discounted, should be credited to the system as salvage value. For example, if the ACES were to be replaced by some other type of central heating and cooling system at the end of 20 years, the air ducts could continue to serve in the new system. Similarly, the ACES ice bin could be converted into useful basement area so that at least a portion of its basic construction costs would be recoverable. The magnitude of the salvage value that should be assumed for either component is a matter of judgment and could range from zero to more than the initial cost.

7.2.3 Maintenance costs

Maintenance costs for an ACES consist of annual expenditures for routine service and inspection, routine preventive maintenance, and unscheduled maintenance as needed, to keep the system operational during its 20-year lifetime. The annual maintenance costs of conventional heating and cooling systems that have accumulated many years of operational history can usually be predicted accurately from past experience. In the case of an ACES, however, a service and maintenance cost schedule must be assumed. Table 7.1 shows a maintenance cost schedule for the ACES that is based on consideration of the individual components of the system. Although this cost schedule may be modified as additional operating experience with the ACES is acquired, it is believed to be reasonably realistic.

Table 7.1. Assumed service and maintenance cost schedule for ACES
(All values in constant dollars)

Year N	Routine service	Clean heat exchangers	Replace control system	Rebuild, repair pumps	Hot water tank	Ice bin service[a]	Total
1	50						50
2	50						50
3	50						50
4	50	110					160
5	50					100	150
6	50						50
7	50			150			200
8	50	110			200		360
9	50						50
10	50		300			100	450
11	50						50
12	50	110					160
13	50						50
14	50			150			200
15	50					100	150
16	50	110			200		360
17	50						50
18	50						50
19	50						50
20	50						50

[a]Drain ice bin, check structural supports, refill with fresh water.

The present value of ACES maintenance costs (MC) is obtained by discounting the annual expenditures for maintenance, expressed in then-current dollars, and summing the discounted values over the 20-year period. Thus, using the expenditures from Table 7.1, the present value of the maintenance costs is given by:

$$MC = 50 \cdot R + 50 \cdot R^2 + 50 \cdot R^3 + 160 \cdot R^4 + 150 \cdot R^5 + \ldots + 50 \cdot R^{20}$$

or

$$MC = \sum_{n=1}^{20} P_n \cdot R^n \,. \qquad (7.2)$$

In Eq. (7.2)

MC = the present value of ACES maintenance costs, taken over a 20-year period;

P_n = maintenance cost for year n, in constant dollars;

r_m = annual escalation rate of maintenance costs;

r_d = annual discount rate (cost of capital); and

$$R = \frac{1 + r_m}{1 + r_d} ,$$

where r_m and r_d are expressed in decimal form. Table 7.2 shows the present value of the assumed annual maintenance costs of the ACES as a function of the discount rate and the maintenance cost escalation rate.

Table 7.2. Present value of ACES maintenance costs as a function of discount rate (r_d) and annual maintenance cost escalation rate (r_m)

r_d	r_m				
	0.05	0.06	0.07	0.08	0.09
0.09	1880	2060	2260	2490	2940
0.10	1720	1880	2060	2270	2490
0.11	1580	1720	1890	2070	2270
0.12	1450	1580	1730	1890	2070

7.2.4 Electric power cost

The present value of the annual charges for electricity consumed by the ACES is obtained by discounting each annual power cost, expressed in then-current dollars, and summing the discounted values over each year of the study period. Thus, the present value of the power costs is given by:

$$PC = P_o \cdot R + P_o \cdot R^2 + \ldots + P_o \cdot R^N . \qquad (7.3)$$

In Eq. (7.3)

PC = the present value of ACES costs for electricity consumption taken over a period of N years;

P_o = the annual cost of electricity consumed, at year-zero prices;
r_e = the annual price escalation rate of electricity;
r_d = the annual discount rate (cost of capital);
N = the number of years (20) of the study period;

$$R = \frac{1 + r_e}{1 + r_d},$$

where r_e and r_d are expressed in decimal form.

The sum of the power series shown in Eq. (7.3) is given by the relationship,

$$PC = P_o \cdot \frac{R(R^N - 1)}{(R - 1)} . \tag{7.4}$$

This relationship can be easily evaluated to yield the present value of ACES power costs over a 20-year period, for a range of assumed values r_e and r_d. Table 7.3 presents the results of such an evaluation, where it is assumed that $P_o = 1$. To determine the present value of the power costs incurred by a particular ACES design, the actual value of P_o for the ACES design should be multiplied by an appropriate factor from Table 7.3. For a particular ACES design, the cost of electricity consumed during year zero, P_o, is obtained by multiplying the annual amount of electricity consumed by the ACES by the electrical power rate that currently prevails in the region.

Table 7.3. Present worth factor of ACES power costs as a function of the discount rate (r_d) and the annual electricity price escalation rate (r_e)

r_d	r_e				
	0.050	0.060	0.070	0.080	0.090
0.090	13.82	15.11	16.56	18.18	20.00
0.100	12.72	13.87	15.15	16.59	18.20
0.110	11.74	12.77	13.91	15.19	16.62
0.120	10.87	11.79	12.82	13.95	15.22

8. MANUAL ACES DESIGN PROCEDURES

This section presents manual design procedures for: (1) estimating the thermal loads of a building; (2) sizing the ACES components to deliver these loads; (3) calculating selected operating parameters, including the ACOP of the system; and (4) determining the annual electricity consumption of the ACES. Procedures for estimating the initial and life-cycle costs of the residential ACES are also described. The section is divided into two subsections: the first presents a rapid ACES design method that requires few computations; the second describes a more detailed method for custom design. The less complex design method should be used for preliminary scoping purposes, enabling the builder to decide whether or not the ACES is a promising alternative HVAC system for a particular application. The custom design method can refine the initial design estimates to be more compatible with a given building design.

8.1 Rapid ACES Design

A method for estimating component sizes, expected system performance, and initial installation costs of a residential ACES is needed by the builder who wishes to compare the ACES with alternative heating and cooling systems. To meet this need, ACES designs have been calculated for different-sized single-family reference houses located throughout the United States and are tabulated in Table B.2 (Appendix B). The reference houses are of two sizes and two levels of thermal insulation and typify construction practices in 16 geographical zones of the country.[1] After identifying the reference houses that are similar to a particular house plan, the home builder can approximate ACES design and performance data directly from Table B.2.

8.1.1 Description of reference houses

The four reference houses of each geographical region (Fig. A.1, Appendix A) have design features such as type of foundation, number of stories, size, etc., that exemplify construction practices in that region.

The reference houses include both small and large dwellings that have medium and high levels of thermal insulation; the builder should be able to find reference houses having thermal properties similar to those of his building plan. The builder can then interpolate between the ACES designs listed in Table B.2 to obtain an approximate ACES design for his proposed building. Tables A.1 and A.2 (Appendix A) provide descriptions of the reference houses for each of the 16 geographical zones.

8.1.2 Rapid ACES design procedure (work form 1)

A preliminary estimate of the performance of a planned residential ACES and the required sizes of its components can be obtained by simple interpolation between the ACES design values listed in Table B.2 (Appendix B). The interpolation can be performed using work form 1 and the instructions that accompany it in Sect. 8.3. The completed work form furnishes a record of the preliminary ACES design estimates and lists anticipated cost and performance data.

8.1.3 Accuracy of the results

The rapid design method provides preliminary estimates of the size, cost, and performance of a proposed residential ACES. The accuracy of the results depends upon whether or not the monthly thermal loads of the proposed ACES house are well approximated by interpolations between the loads of the reference houses and whether or not the operating parameters of the planned ACES are similar to those assumed in the design tables. If the proposed residential ACES application differs substantially from the standard ACES designs of Table B.2, the results of the rapid design method should be verified using custom design procedures described in the next section.

The standard ACES designs listed in Table B.2 have been calculated on the basis of assumptions described in the Appendix. The most important of these assumptions, against which the proposed ACES should be compared, are as follows: $COP_I(H) = 2.55$, $COP_I(C) = 12.7$, $COP_S(H) = 2.68$ and $COP(BR) = 2.01$. These operating parameters are for a well-designed system that employs a high performance heat pump and high efficiency pumps and

fans. The heat pump, assumed to have the performance characteristics listed in Table 4.1, is one that could be built using existing technology. The heat losses from the pumps and compressor are assumed to be vented into the house during the heating season and rejected to the outdoors during the cooling season. The ice storage bin is assumed to be located below-grade and insulated on all surfaces to an R-40 insulation level.

8.2 Custom ACES Design

The custom design method enables the builder to design a residential ACES to deliver any desired set of monthly loads for space heating, water heating, and air conditioning. The proposed building might have unusual features that could cause its monthly heating and cooling needs to differ substantially from those computed for the reference houses listed in the Appendix. Such features might include: larger or smaller floor areas, underground location, large glass exposures, unusual levels of thermal insulation or air-infiltration control, or unusual life-style of the inhabitants. Thus, techniques for custom-designing an ACES to a particular residence are essential to ensuring system adequacy and efficiency.

The ACES design procedures described in this section can be performed manually but are considerably more detailed than the rapid ACES design described earlier. The custom ACES design method requires the estimation of (1) building design hourly heat load; (2) monthly thermal demands of the building for space heating, water heating, and space cooling; (3) modal operating parameters of the system; (4) size of the solar collector panel required; (5) annual power consumption of the system; and (6) the life-cycle cost of the ACES over a 20-year period. A discussion of each of these follows.

8.2.1 Design hourly heating load (work form 2)

As discussed in Sect. 3.1.1, the design hourly heating load of the proposed ACES house must be calculated to determine the required capacity rating of the ACES heat pump. The design hourly heating load of the

building can be calculated by using any conventional method or by using work form 2 and the instructions provided in Sect. 8.3.

8.2.2 Design monthly thermal loads (work form 3)

In this section we assume that the builder will specify the monthly thermal loads that are to be used in the ACES design analysis. These monthly loads for space heating, water heating, and space cooling may be obtained from empirical data, if it is available. Regardless of the source of information, the ACES designer should inspect carefully the loads estimates to ensure that they are realistic. Adjustments may be required to make the monthly loads estimates better represent an average local weather year, reflect local heating and air-conditioning experience, and account for such special factors as unusual building design, building orientation, anticipated occupant life-styles, and peculiarities of the construction site.

Work form 3 (Sect. 8.3) can be used to record the monthly thermal loads used to size the ACES and its components. The work form has columns for listing the initial loads estimates and for recording the adjusted monthly loads, which take into account local experience and conservative design practices. The instructions for work form 3 describe an optional method of loads calculation for use when access either to empirical loads data or to computer facilities is unavailable.

8.2.3 Modal operating parameters (work form 4)

Estimation of the system performance requires information relating to the power and capacity ratings of each system component engaged during a particular mode of operation. Five primary modes of operation are defined for the ACES: water or space heating and space cooling during the ice phase of the annual cycle; and water or space heating, space cooling, and ice-bin heat rejection during the supplemental phase of the annual cycle. During the ice phase the delivery of heat to the house is primarily for space heating; during the supplemental phase the delivery of heat is primarily for heating water. Thus, in ACES design analysis,

the heating mode operating parameters during the ice phase are taken to be those prevailing for space heating, and the heating mode parameters for the supplemental phase are based on water heating only.

Work form 4 (Sect. 8.3) provides a convenient method for assembling and recording the diverse information required for estimating the modal operating parameters of a given ACES design. The work form lists the components engaged during each of the five modes of system operation and provides spaces for recording the electrical power and capacity ratings of each component. These values depend upon the components actually selected for the system, fans, pumps, heat pump package, etc., and must be measured under the expected operating conditions or acquired from manufacturer's listings, as illustrated in Table 4.1 of this report. The instructions accompanying work form 4 list the equations for calculating the modal operating parameters of the system, as defined in Sect. 2.1.2. When completed, work form 4 furnishes a useful record of the component characteristics used in the ACES design analysis.

8.2.4 Solar panel size (work form 5)

This section describes procedures for determining the minimum size of a solar collector panel that will yield a heat balance on the ice bin during the ice phase of the annual cycle. It is assumed that the monthly heat-collection capacity, per unit area of panel, is known and that the pumps, fans, heat pump, and ice-bin volume of the system have already been selected. The methods of this section should be applied to determine the size of the panel that must be used with a bin of any chosen size to prevent loss of system heating capability during the heating season.

If a full-ACES design is being considered, the volume of the ice bin and the panel size that must accompany it are determined by an iterative process. First, an initial estimate of the bin volume is obtained using the rapid design method described in Sect. 8.1.2. Then, work forms 5 and 6 (Sect. 8.3) are used to determine the panel size required for the selected bin volume and the amounts of ambient heat collection and bin heat rejection needed during the ice phase and the supplemental phase of design-year

operations. If both of these quantities, Q_{COL} and Q_{BR}, have positive values, the estimated bin volume is increased and the process is repeated. The bin volume that causes either Q_{COL} or Q_{BR} to go to zero is the full-ACES bin size.

Work form 5 aids in assembling and recording the information needed for determining the panel area required for a given bin size. When completed, the form is a useful record of the building loads, ground heat leakages, solar panel capacity, bin size, and bin transfer coefficients assumed in the ACES design. The monthly collection capacities of unglazed flat-plate collectors can be obtained from Table B.2. The capacities of other types of collectors must be obtained by experimentation or from performance data listings by the manufacturer.

8.2.5 Annual power consumption (work form 6)

The building's annual demands for heating and cooling are obtained from work form 3, and the modal COPs of the system from work form 4. To estimate the annual power consumption of the ACES during an average weather year, the portions of the annual loads that are delivered during the ice phase and the supplemental phase must be determined. Then, the modal COPs of work form 4 can be used to calculate the power consumptions of the system for heating and cooling during each phase of the annual cycle. The ice phase is defined to begin in the autumn when, because of increasing demands for space heating, the bin temperature starts to decline from its summer value of 45°F. The ice phase ends and the supplemental phase begins when the ice in the bin has been exhausted and the bin temperature has again risen to 45°F.

Work form 6 can be used to identify the start and end of the two phases of the annual cycle and to estimate the total power consumption of the system during each phase. Part 1 of the work form estimates the heating and cooling loads delivered and the amount of ground heat leakage into the bin during the supplemental phase. From these estimates the supplemental phase COP for space cooling can be calculated according to Eq. (2.16) and the supplemental phase power consumption can be estimated. Part 2 of the work form estimates the heating and cooling loads delivered to the house

during the ice phase of the annual cycle. From these estimates and the modal COPs of work form 4, the ice phase power consumption of the system can be determined.

8.2.6 ACES life-cycle cost (work form 7)

The ACES life-cycle cost represents the single cash outlay for purchasing and installing the system and for prepaying all future costs required to keep the system in operation over an assumed 20-year life. In this simple life-cycle cost analysis, the owner's costs for taxes and insurance are neglected. The initial installed cost of the ACES can be estimated by enumerating and summing the costs of all major components, as shown in work form 7 (Sect. 8.3). The methods described in Sect. 7 can then be used to estimate the annual cash outlays to keep the system running.

As shown in work form 7, the major components of the ACES that must be costed are the heat pump mechanical package, ice storage bin, solar collector panel, control system, auxiliary equipment, and, in the case of the brine-chiller system, an ice-bin heat exchanger. The installed costs of these items will vary locally and must be determined individually for each ACES application. Similarly, the first-year power costs will vary with local electrical rates. The first-year power costs that are determined can be used with Table 7.3 to estimate the present worth of power consumed over a 20-year period. If the service and maintenance schedule shown in Table 7.1 is adopted, Table 7.2 can be used to obtain the present value of these annual costs based upon an assumed discount rate and an annual maintenance-cost escalation rate.

8.3 ACES Design Work Forms and Instructions

INSTRUCTIONS FOR WORK FORM 1

(Rapid ACES Design)

1. Fill in the values requested in the heading of work form 1, shown in Fig. 8.1.

   a. Identify the geographical zone of the proposed ACES site from Fig. A.1 and select from Table B.2 the listed reference city having the climate most similar to that of the proposed site. From Table A.2, determine the set of two reference houses that have a thermal insulation level most nearly equal to the proposed ACES house. Houses 1 and 2 have medium insulation and houses 3 and 4 have high insulation.

   b. Record the index numbers of the reference houses selected and the floor areas of the proposed ACES house and the two reference houses in the spaces provided for this purpose in work form 1.

   c. Record the interpolation constants, C(i) and C(i+1), as calculated by the expressions

$$C(i) = \frac{A(i + 1) - A(x)}{A(i + 1) - A(i)} \tag{8.1}$$

and

$$C(i + 1) = \frac{A(x) - A(i)}{A(i + 1) - A(i)} , \tag{8.2}$$

where the variables A(x), A(i), and A(i + 1) are the floor areas of the proposed ACES house and the two reference houses, respectively, and the reference house index number (i) is equal to 1 or 3, depending upon which set of reference houses has been selected.

2. Record in work form 1 the ACES design parameters V, A, L, U, and E that are listed in Table B.2 for the two reference houses selected. These design parameters are for full, partial, and minimum ACES of the brine-chiller or ice-maker system being considered.

3. Record in work form 1 the design parameters for the proposed ACES house as calculated by the following expression;

$$P(x) = C(i) \cdot P(i) + C(i + 1) \cdot P(i + 1) , \qquad (8.3)$$

where P(x), P(i), and P(i + 1) represent an ACES design parameter of the proposed ACES house and the two reference houses, respectively. That is, in Eq. (8.3), P successively takes on the value of the variables V, A, L, U, and E.

4. Record in work form 1 the total installed costs net of salvage value, the present value of operating costs over a 20-year period, and the life-cycle costs of the full, partial, and minimum ACES for the proposed house. These cost data are computed using work form 7 and the instructions provided for it.

ORNL–DWG 79-21240

RAPID ACES DESIGN

Work Form 1

DATE: _____ JOB: _____

Geographical Zone: _____	Proposed ACES House: (X): _____ ft^2	Interpolation Constants:
Reference City: _____	Reference House No. ( ): _____ ft^2	C( ) = _____
Insulation Level: _____	Reference House No. ( ): _____ ft^2	C( ) = _____

ACES COST AND DESIGN PARAMETERS	PROPOSED ACES HOUSE			REFERENCE HOUSE ( )			REFERENCE HOUSE ( )		
	FULL	PARTIAL	MINIMUM	FULL	PARTIAL	MINIMUM	FULL	PARTIAL	MINIMUM
T, total installed cost, $									
O, operating costs present value, $									
P, present value life-cycle cost, $									
V, wetted volume of ice bin, ft^3									
A, area of solar panel, ft^2									
L, length of ice bin coil, ft									
U, usage of electricity, kWhr/yr									
E, efficiency (annual COP)									

Fig. 8.1. Sample of work form 1 for rapid ACES design.

INSTRUCTIONS FOR WORK FORM 2
(Design Day Heating Load)

1. Fill in the values requested in the heading of work form 2, shown in Fig. 8.2.

   Identify in Table B.2 the reference city having the climate most similar to the construction site of the proposed ACES house. From the house design data and the tabulated values for the city selected, obtain and record the following quantities:

   TDD = outdoor winter air temperature, °F;
   TG = earth temperature at ground floor depth, °F;
   V = average January wind speed, miles/h;
   TSW = desired winter indoor air temperature, °F;
   VOL = heated volume of the house, ft^3;
   ACH = air infiltration rate, changes per hour.

   Values of TG are calculated by Eq. (3.2) using constants A_0, B_0, and P_0 obtained from Table B.2 for the reference city. The value of ACH is calculated using the equation provided at the bottom of work form 2.

2. Fill in values of A, U and ΔT for each exterior surface element of the proposed ACES house.

   A = area of an exposed surface element, ft^2;
   U = heat transfer coefficient of the element, $Btu/h/ft^2/°F$; and
   ΔT = temperature difference across the surface element, °F.

   Values of U are calculated using the methods of Chap. 22, *ASHRAE 1977 Fundamentals Handbook*,[2] and the temperature difference ΔT is equal to (TSW - TDD) for above grade exposures and (TSW - TG) for below grade exposures.

3. Sum the vertical surface elements listed for each side of the proposed house to check that all surface elements have been included. Compute the products ($A \cdot U \cdot \Delta T$) across each line of the work form and enter their sum in the last column of work form 2. Compute the total rate

of heat loss from the house by conduction and enter the answer in the space provided.

4. Calculate the hourly loss of heat from the house by infiltration of outdoor air and enter the result in the space provided. Sum the rates of heat loss from the building caused by conduction and air infiltration to obtain the design-day heat loss rate. Enter this result in the space provided for it in work form 2.

ORNL-DWG 79-16638R

DESIGN DAY HEAT LOAD

Work Form 2

DATE: _____ JOB: _____

Indoor Air Temperature: TSW = _____ °F

Outdoor Air Temperature: TDD = _____ °F

Ground Temperature: TG = _____ °F

House Volume: VOL = _____ FT^3

Air Change Rate*: ACH = _____ AC/HR

Wind Speed: V = _____ MPH

EXPOSURE	EXTERIOR BUILDING SURFACES	NORTH (or horizontal)			SOUTH (or horizontal)			EAST (or horizontal)			WEST (or horizontal)			HEAT LOSS (Btu/hr)
		A	U	ΔT	A	U	ΔT	A	U	ΔT	A	U	ΔT	
ABOVE GRADE	WALLS													
	DOORS													
	GLASS AREAS													
	CEILING													
	FLOOR													
BELOW GRADE	FLOOR													
	WALLS													
CHECK OF TOTAL VERTICAL AREAS												CONDUCTION HEAT RATE =		

INFILTRATION HEAT LOSS RATE: [0.018 X VOL X ACH X (TSW – TDD)] =

TOTAL DESIGN DAY HEAT LOSS RATE: (CONDUCTION + INFILTRATION) =

$$^{*}ACH = N\left[\frac{0.15 + 0.013V + 0.005\Delta T}{0.695}\right]$$, where $\Delta T = TSW - TDD$, V = average wind speed (mph), and $N \geq 1$.

Fig. 8.2. Sample of work form 2 for calculating design-day heat load.

INSTRUCTIONS FOR WORK FORM 3
(Design Monthly Loads)

1. Record in columns A, B and C of work form 3, shown in Fig. 8.3, the estimated monthly thermal loads of the proposed ACES house for space heating, water heating, and space cooling, respectively. The designer who chooses not to estimate these loads using the optional procedure described in step 2 should proceed to step 3.

2. Identify in Tables A.2 and B.2 the representative city for the proposed ACES construction site and the set of two reference houses of this city having a thermal insulation level most nearly equal to that of the proposed ACES house. This set of reference houses will be either houses 1 and 2 or houses 3 and 4.

   a. Estimate the monthly space heating loads of the proposed ACES house (MBtu) by interpolating between the monthly space heating loads listed in Table B.2 for the two reference houses selected, according to the following expression:

$$q_H(x) = q_H(i)\,\frac{D(i+1) - D(x)}{D(i+1) - D(i)} + q_H(i+1)\,\frac{D(x) - D(i)}{D(i+1) - D(i)}\,, \qquad (8.4)$$

   where $q_H(x)$, $q_H(i)$, and $q_H(i + 1)$ are the monthly space heating loads of the proposed ACES house, reference house (i) and reference house (i + 1), respectively. The variables D(x), D(i), and D(i + 1) are the corresponding design-day heating loads of the three houses. The design-day heating load of the ACES house is obtained by filling out work form 2, and the remaining variables in Eq. (8.4) are obtained from Table B.2 for the reference city selected.

   b. Estimate the monthly space cooling loads of the proposed ACES house (MBtu) using the following expression:

$$q_C(x) = q_C(i)\,\frac{A(i+1) - A(x)}{A(i+1) - A(i)} + q_C(i+1)\,\frac{A(x) - A(i)}{A(i+1) - A(i)}\,, \qquad (8.5)$$

where $q_C(x)$, $q_C(i)$, and $q_C(i + 1)$ are the monthly space cooling loads of the proposed ACES house, reference house (i) and reference house (i + 1), and A(x), A(i), and A(i + 1) are the corresponding floor areas of the three houses.

c. Estimate the monthly water heating loads of the proposed ACES house to be the same as those listed for the reference houses of the reference city in Table B.2. These water heating loads are based on an assumed domestic hot water consumption rate of 70 gal/day.

3. Adjust the estimated monthly thermal loads of the proposed ACES house to reflect local experience. Record the design monthly loads that will be used to size the ACES in columns D, E, F and G. Compute and record the design-annual thermal loads of the ACES house and examine them for reasonableness as ACES design criteria.

ORNL–DWG 79-16639R

ACES DESIGN MONTHLY LOADS

Work Form 3

DATE: _____ JOB: _____

MONTH	A	B	C	D	E	F	G
	CALCULATED LOADS			SELECTED ACES DESIGN LOADS			
	SPACE HEAT q_H MBtu	WATER HEAT q_{HW} MBtu	SPACE COOL q_C MBtu	SPACE HEAT q_H MBtu	WATER HEAT q_{HW} MBtu	TOTAL HEAT q_{HT} MBtu	SPACE COOL q_C MBtu
Jan							
Feb							
Mar							
Apr							
May							
Jun							
Jul							
Aug							
Sep							
Oct							
Nov							
Dec							
TOTAL							

Fig. 8.3. Sample of work form 3 for ACES design monthly thermal loads.

INSTRUCTIONS FOR WORK FORM 4
(Modal Operating Parameters)

1. Record in work form 4, shown in Fig. 8.4, the values of the electrical power ratings of each component engaged in the five primary modes of operation. These values are obtained from manufacturer's listings describing the components that have been selected for the system. (See Table 4.1 for a sample listing.)

2. Record the ratings of the compressor, indoor fan coil, desuperheater and condenser for the five modes of operation in the spaces provided in work form 4. The supplemental phase rating of the indoor fan coil during space cooling is taken to be 72% of its value during the ice phase. This reduction accounts for the fact that 45°F cold brine is circulated through the coil instead of 32°F brine, as is the case during the ice phase of the annual cycle.

3. Record the modal operating parameters of the system for the five modes of operation, as computed by the expressions given in Sect. 2.1.2:

$$COP_I(H) = \frac{(1 + C_I)E_C + E_F + E_{HB} + 0.75E_{CB}}{E_C + E_F + E_{HB} + E_{CB}}, \qquad \text{Eq. (2.2)}$$

$$COP_I(C) = \frac{H_I - E_F}{E_F + E_{CB}}, \qquad \text{Eq. (2.6)}$$

$$COP_S(H) = \frac{(1 + C_S)E_C}{E_C + E_{CB} + E_{HW}} \quad \text{or} \quad \frac{H_{DS} + H_{CD}}{E_C + E_{CB} + E_{HW}}, \qquad \text{Eq. (2.9)}$$

$$COP(BD) = \frac{H_S - E_F}{E_F + E_{CB}}, \qquad \text{Eq. (2.11)}$$

$$COP(BR) = \frac{C_S \cdot E_C - 0.25E_{CB}}{E_C + E_{CB} + E_{HB} + E_{OF}}, \qquad \text{Eq. (2.14)}$$

$$\alpha_I(H) = \frac{(C_I \cdot E_C - 0.25E_{CB})}{(1 + C_I)E_C + E_F + E_{HB} + 0.75E_{CB}} , \qquad \text{Eq. (2.3)}$$

$$\alpha_I(C) = \frac{H_I + 0.25E_{CB}}{H_I - E_F} , \qquad \text{Eq. (2.7)}$$

$$\alpha_S(H) = \frac{C_S \cdot E_C - 0.25E_{CB}}{(1 + C_S)E_C} , \qquad \text{Eq. (2.10)}$$

$$\alpha_S(C) = \frac{H_S + 0.25E_{CB}}{H_S - E_F} . \qquad \text{Eq. (2.12)}$$

ORNL–DWG 79-21241

ACES MODAL OPERATING PARAMETERS

Work Form 4

DATE: _____ JOB: _____

ANNUAL CYCLE ENERGY SYSTEM	ICE PHASE		SUPPLEMENTAL PHASE		
	HEATING	COOLING	HEATING	COOLING	BIN REJECT
POWER EQUIPMENT:					
Heat pump compressor, E_C kW		X		X	
Indoor fan coil, E_F kW			X		X
Cold brine pump, E_{CB} kW					
Hot brine pump, E_{HB} kW		X	X	X	
Hot water pump, E_{HW} kW	X	X		X	X
Outdoor fan coil, E_{OF} kW	X	X	X	X	
Total Electrical Draw, E_T kW					
COMPONENT RATINGS:					
Evaporator-side compressor COP		X		X	
Indoor fan coil, H Btu/hr	X		X		X
Desuperheater, H_{DH} Btu/hr	X	X		X	X
Condenser, H_{CD} Btu/hr	X	X		X	X
MODAL OPERATING PARAMETERS:	$COP_I(H)$	$COP_I(C)$	$COP_S(H)$	COP(BD)	COP(BR)
System performance, $COP_P(M)$*					
Bin transfer coefficients, $\alpha_P(M)$*					1.00
	$\alpha_I(H)$	$\alpha_I(C)$	$\alpha_S(H)$	$\alpha_S(C)$	

(*P denotes phase of the annual cycle, M denotes operating mode.)

Fig. 8.4. Sample of work form 4 for ACES modal operating parameters.

INSTRUCTIONS FOR WORK FORM 5
(Solar Panel Size)

1. In the spaces provided in work form 5, shown in Fig. 8.5, fill in the values of the bin transfer coefficients $\alpha_I(C)$ and $\alpha_I(H)$ obtained from work form 4. Record the values of the ice bin thermal capacity (MBtu) and the areas (ft^2) of the bin top and sides, as computed by the expressions:

$$TCAP = (8.138PF + 0.811)V_{WET} , \tag{8.6}$$

$$A_T = W \cdot L , \tag{8.7}$$

$$A_S = 2H \cdot (W + L) . \tag{8.8}$$

The ice storage bin is assumed to have interior dimensions of H, W, and L ft, respectively, and a maximum wetted volume of V_{WET} ft^3. TCAP is the thermal capacity of the bin and PF is the ice packing fraction, 0.4 for an ice-maker and 0.8 for a brine-chiller ACES.

2. In column A, fill in the 12 thermal loads imposed upon the ice bin by the building demands for heating and cooling. Calculate the ice bin thermal loads (MBtu) by the expression:

$$q_{HSE}(m) = \alpha_I(C) \cdot q_C(m) - \alpha_I(H) \cdot q_{HT}(m) , \tag{8.9}$$

where $q_{HT}(m)$ and $q_C(m)$ are obtained from columns F and G, respectively, of work form 3. Note that a negative value for $q_{HSE}(m)$ denotes heat extraction from the ice bin, and a positive value for $q_{HSE}(m)$ denotes a heat deposit in the ice bin.

3. In column B, fill in the 12 values of ground heat leakage into the ice bin. Calculate the ground heat leakage, q_L, from the expression:

$$q_L(m) = A_T \cdot TB(m) + A_S \cdot SD(m) . \tag{8.10}$$

The monthly ice-bin heat-leakage coefficients, TB(m) and SD(m) in MBtu/ft^2, may be obtained from Table B.2.

4. In column E, fill in the 12 values of the thermal loads imposed upon the ice bin as a result of house loads and ground leakage. These values are obtained by summing, for each month, the values entered in columns A and B:

$$q_{DEP}(m) = q_{HSE}(m) + q_L(m) \ . \tag{8.11}$$

5. In column F, fill in the 12 values of the solar/convector panel heat collection capacity, PAN(m), obtained from Table B.2. In column G, fill in values of the full-melt panel area, $A_{FM}(m)$, only for those months having a net heat extraction from the ice bin. Calculate the full-melt panel area by the equation:

$$A_{FM}(m) = -q_{DEP}(m)/PAN(m) \ . \tag{8.12}$$

6. In column E, starting with the largest monthly net heat withdrawal, sum in descending order until $\beta = -q_{DEP}(m)$ exceeds the thermal storage capacity, TCAP, of the ice bin. Record in part 2 of work form 5 the value of β obtained and the months summed.

7. In column F, sum the panel capacities over the same span of months and record the answer, $\gamma = \sum PAN(m)$, in part 2 of work form 5. Calculate and record the quantity, $\alpha = \beta - TCAP$, in part 2 of work form 5 and compute the first iteration of the required panel size, $A_{PAN} = \alpha/\gamma$.

8. If A_{PAN} exceeds the full melt panel areas, $A_{FM}(m)$, of all months not included in the summation which determined A_{PAN}, the iteration process is completed. IF A_{PAN} is less than $A_{FM}(m)$ for one of the months not included in the summation, the span of months to be summed must be expanded to include that particular month and the iteration process must be continued.

9. In column C, fill in the 12 values of the monthly environmental energy collected by the solar/convector panel. These values, $q_{COL}(m)$, are calculated for each month m as follows:

If $q_{DEP}(m)$, listed in column C, is positive, then $q_{COL}(m) = 0$. If month m is included in the span of months summed and listed in part 2 of work form 5, then $q_{COL}(m) = A_{PAN} \times PAN(m)$, that is, the panel operates at 100% of capacity. If month m is not included in the span of months summed, then $q_{COL}(m) = -q_{DEP}(m)$, that is, the panel is operated at less than full capacity to melt out only that amount of ice formed during the month.

10. In column D, fill in the 12 values of the net load imposed upon the ice bin by house loads, ground heat leakage, and the solar panel. These values are calculated by the expression:

$$q_{NET}(m) = q_{HSE}(m) + q_L(m) + q_{COL}(m) \ , \tag{8.13}$$

where the monthly values of q_{HSE}, q_L, and q_{COL} are obtained from columns A, B, and C, respectively.

ORNL–DWG 79-16645

SOLAR PANEL SIZE

Work Form 5

DATE: _____ JOB: _____

Part 1

MONTH	A ICE BIN HEAT FLOWS FROM House Loads q_{HSE} MBtu	B Ground Leakage q_L MBtu	C Solar Panel q_{COL} MBtu	D NET BIN LOAD q_{NET} MBtu	E BIN HEAT DEPOSIT q_{DEP}, MBtu	F SOLAR PANEL RATING PAN MBtu/ft^2	G FULL MELT PANEL AREA A_{FM} ft^2
Jan							
Feb							
Mar							
Apr							
May							
Jun							
Jul							
Aug							
Sep							
Oct							
Nov							
Dec							

$\alpha_I(C)$ = _____ $\alpha_I(H)$ = _____ , TCAP = _____ MBtu, A_T = _____ ft^2, A_{SD} = _____ ft^2.

Part 2

IT. NR.	MONTHS INCLUDED IN THE SUMMATION	α = (β − TCAP)	β = $-\Sigma\, q_{DEP}$	γ = Σ PAN	A_{PAN} α/γ
1					
2					
3					
4					
5					

Fig. 8.5. Sample of work form 5 for sizing the solar panel.

INSTRUCTIONS FOR WORK FORM 6
(Annual Power Consumption)

Part 1

1. In columns A and B of work form 6, shown in Fig. 8.6, enter the 12 ACES design monthly loads for heating and cooling, respectively, as obtained from columns F and G of work form 3.

2. In column C, fill in the 12 net monthly loads imposed upon the ice bin by the house demands for heating and cooling, ground heat leakage, and heat deposits in the ice bin by the solar collector panel. The net thermal loads, $q_{NET}(m)$, are obtained from column D of work form 5.

3. Determine the index number of the month, M, that marks the start of the ice phase of the annual cycle by identifying in column E of work form 5 the autumn month at which $q_{DEP}(m)$ first assumes a negative value. Compute

$$q_{TOT}(M) = TCAP + q_{NET}(M) \ , \tag{8.14}$$

in MBtu, by summing algebraically. For the month identified as the start of the ice phase of the annual cycle, enter the values

$$q_{TOT}(M)$$
$$q_{HT}(SP) = 0$$
$$q_C(SP) = 0$$
$$q_L(SP) = 0$$

into columns D, E, F, and G of work form 6, respectively.

4. For each succeeding month, m, compute a value of $q_{TOT}(m)$ by the recursion relationship,

$$q_{TOT}(m) = q_{TOT}(m - 1) + q_{NET}(m) \ , \tag{8.15}$$

in MBtu. If the value of $q_{TOT}(m)$ obtained is less than or equal to TCAP, for that month enter the values

$$q_{TOT}(m)$$
$$q_{HT}(SP) = 0$$
$$q_C(SP) = 0$$
$$q_L(SP) = 0$$

into columns D, E, F, and G of work form 6, respectively.

If the value of $q_{TOT}(m)$ obtained is greater than TCAP, the ice phase of the annual cycle is at an end and the system must operate in the supplemental phase to supply the house thermal demands. Compute the fraction F by the relationship

$$F = \frac{q_{TOT}(m) - TCAP}{q_{NET}(m)} , \tag{8.16}$$

and enter the values

$$q_{TOT}(m) = TCAP ,$$
$$q_{HT}(SP) = F \cdot q_{HT}(m) ,$$
$$q_C(SP) = F \cdot q_C(m) , \text{ and}$$
$$q_L(SP) = F \cdot q_L(m)/2 ,$$

into columns D, E, F, and G, respectively. In the above expressions, $q_{HT}(m)$ and $q_C(m)$ are obtained from columns A and B of work form 6, respectively, and $q_L(m)$ is obtained from column B of work form 5.

5. Sum columns A, B, E, F, and G and enter the sums in the spaces provided in work form 6. If the sums obtained are denoted by Q_A, Q_B, Q_E, Q_F, and Q_G, respectively, the system cooling COP in the supplemental phase of the annual cycle is obtained from the expressions, from Eqs. (2.16) and (2.17)

$$COP_S(C) = [COP(BD)^{-1} + K_o \cdot COP(BR)^{-1}]^{-1} , \tag{8.17}$$

where

$$K_o = \alpha_S(C) + Q_G/Q_F - \alpha_S(H) \cdot Q_E/Q_F . \tag{8.18}$$

Calculate $COP_S(C)$ using Q_E, Q_F, and Q_G from the bottom line of work form 6, part 1, and values for the other parameters from work form 4, and enter the value in line 3, column 4, of work form 6, part 2.

INSTRUCTIONS FOR WORK FORM 6
(Annual Power Consumption)

Part 2

1. In part 2, line 1, enter the annual heating and cooling loads that are delivered to the building during the ice phase and the supplemental phase of the annual cycle. These loads are:

$$Q_{HT}(IP) = Q_A - Q_E \tag{8.19}$$

$$Q_C(IP) = Q_B - Q_F \tag{8.20}$$

$$Q_{HT}(SP) = Q_E \tag{8.21}$$

$$Q_C(SP) = Q_F \tag{8.22}$$

2. In the first 3 columns of line 3, part 2, enter the primary modal COPs of the system, $COP_I(H)$, $COP_I(C)$, and $COP_S(H)$, as obtained from work form 4.

3. Compute the electrical energy consumed by the system during each mode of operation, M, by the expression

$$Q_{EL}(M) = \frac{Q_{DL}(M)}{COP(M)}, \tag{8.23}$$

where $Q_{EL}(M)$ is the power consumption, $Q_{DL}(M)$ is the delivered load shown in line 1, and COP(M) is the modal COP shown in line 3 of work form 6, part 2, for each of the four principal operating modes.

Enter the electricity consumptions obtained in the spaces provided in line 2 of the work form.

4. Sum line 1 to obtain the annual delivered load and enter the result in column G. Similarly, sum line 2 to obtain the total annual power consumption of the system and enter the result in column G, line 2.

5. Calculate the annual COP of the ACES, defined to be the ratio of the annual delivered loads to the annual power consumption, and enter the result obtained in work form 6, part 2, line 3.

ORNL–DWG 79-16646

ACES POWER CONSUMPTION

Work Form 6

DATE: _____ JOB: _____

Part 1

MONTH	A HEATING LOAD q_{HT} MBtu	B COOLING LOAD q_C MBtu	C BIN LOAD q_{NET} MBtu	D BIN HEAT LEVEL q_{TOT} MBtu	E SUPPLEMENTAL PHASE HEATING $q_{HT}(SP)$ MBtu	F SUPPLEMENTAL PHASE COOLING $q_C(SP)$ MBtu	G SUPPLEMENTAL PHASE LEAKAGE $q_L(SP)$ MBtu
Jan							
Feb							
Mar							
Apr							
May							
Jun							
Jul							
Aug							
Sept							
Oct							
Nov							
Dec							
TOTAL			TCAP =				

$$K_O = \alpha_S(C) + \frac{O_L(SP)}{O_C(SP)} - \alpha_S(H) \cdot \frac{O_{HT}(SP)}{O_C(SP)} = (\quad) + \frac{(\quad)}{(\quad)} - (\quad) \cdot \frac{(\quad)}{(\quad)} = _____.$$

$$COP_S(C) = \left(\frac{1}{COP(BD)} + \frac{K_O}{COP(BR)}\right)^{-1} = \left(\frac{1}{(\quad)} + \frac{K_O}{(\quad)}\right)^{-1} = _____.$$

Part 2

SYSTEM PERFORMANCE	ICE PHASE HEATING	ICE PHASE COOLING	SUPPLEMENTAL PHASE HEATING	SUPPLEMENTAL PHASE COOLING	ANNUAL CYCLE
Delivered loads, MBtu					
Power consumption, MBtu					
COP					

Fig. 8.6. Sample of work form 6 for estimating ACES annual power consumption.

INSTRUCTIONS FOR WORK FORM 7
(ACES Life Cycle Cost)

1. Record the size or quantity of the items which have been determined for the ACES design in the column headed "item quantity," work form 7, Fig. 8.7.

2. Record unit costs under "unit materials cost." Record total materials costs, generally column one times column two, in the third column.

3. Estimate installation costs and enter in the fourth column of work form 7.

4. Sum the material costs and the installation costs and enter in the final (fifth) column of work form 7.

5. Sum each column, entering subtotals where appropriate. Sum the subtotals of column five (installed costs) and enter in the space provided for "total installed cost."

6. Compute and record the present value of operating costs for electrical power and maintenance, respectively.

   Power. Multiply the estimated annual power consumption of the ACES, obtained from work form 6, by the local electrical power rate to obtain the first-year power costs of the system. Multiply the first-year power costs by the present worth factor, obtained from Table 7.3, to obtain the present worth of expenditures for power over a 20-year period.

   Maintenance. If the service and maintenance costs shown in Table 7.1 are assumed, obtain the present worth of expenditures for repair and maintenance directly from Table 7.2. If another service schedule is considered to be more realistic, obtain its present worth value by the use of Eq. (7.2).

7. Sum the total installed cost of the ACES and the present value of annual operating costs for power and maintenance. Deduct from this amount any discounted residual worth or salvage value that the system is assumed to possess at the end of the 20-year period. Record the

present value of the ACES life cycle cost in the space provided in work form 7.

Salvage value. See Sect. 7.2.2 for a discussion of the considerations that apply in determining the discounted salvage value of the system.

ORNL-DWG 79-16650A

ACES LIFE CYCLE COST

Work Form 7

DATE: _____ JOB: _____

COMPONENT	ITEM	ITEM QUANTITY	UNIT MATERIAL COST	TOTAL MATERIAL COST	ESTIMATE INSTALL COST	ITEM INSTALLED COST
Mechanical Package	Heat Pump	tons				
			SUBTOTAL			
Ice Storage Bin	Wall construction	ft^2	$\$/ft^2$			
	Floor construction	ft^2	$\$/ft^2$			
H = ft	Top construction	ft^2	$\$/ft^2$			
W = ft	Footing construction	ft	\$/ft			
L = ft	Wall insulation, in.	bd-ft	\$/bd-ft			
V_{TOT} = ft^3	Floor insulation, in.	bd-ft	\$/bd-ft			
V_{WET} = ft^3	Top insulation, in.	bd-ft	\$/bd-ft			
	Water-proof liner	ft^2	$\$/ft^2$			
	Other, excavation					
			SUBTOTAL			
Ice Bin Heat Exchanger	Tubing	ft	\$/ft			
	Other					
			SUBTOTAL			
Solar Collector	Panel surface	ft^2	$\$/ft^2$			
	Other					
			SUBTOTAL			
Other Components	Hot water tank	gal.				
	Control system					
	Auxiliary pumps	hp				
	Back-up heating system	kW				
	Duct system					
			SUBTOTAL			
Total Installed Cost						
Operating Costs Present Values		Fuel				
		Maintenance				
Present Value Life Cycle Cost						

Fig. 8.7. Sample of work form 7 (ACES life-cycle cost).

REFERENCES

1. NAHB Research Foundation, Inc., *Research Program on the Economic Feasibility and Commercialization Potential of ACES*, ORO/2130/1 (February 1979).

2. American Society of Heating, Refrigeration, and Air Conditioning *ASHRAE Handbook and Product Directory: 1977 Fundamentals*, ASHRAE, New York, 1978, Chap. 22.

9. SAMPLE ACES DESIGN PROBLEM

9.1 Description of the Problem

A home builder in Anderson, Indiana, plans to construct an 1800-ft^2, single-story, ranch-type house having the characteristics listed in Table 9.1 and wishes to consider an ACES heating and cooling plant for the building. The building will be of frame construction and will be occupied by a family of four, consisting of parents and two teenage children. Before committing himself to an ACES, the builder requires preliminary answers to several important questions. What size ACES is needed for the typical weather conditions of Anderson? How much will it cost? What is the estimated performance of such a system? The following sections illustrate how the builder can obtain approximate or detailed answers to these questions.

Table 9.1. Planned 1800-ft^2 ranch building

Foundation (30' x 60')	Unheated basement
Ceiling and floor area, ft^2	1800
Total wall area, ft^2	1224
Window area, ft^2	216
Nominal R-value, floor	11
Nominal R-value, ceiling	38
Nominal R-value, walls	13
Window type	Double glazed
Storm doors	Yes
Garage	Attached

9.2 Rapid Design Method

From the list of 111 cities given in Table B.2, the builder finds the city having the climate most similar to that of the proposed construction site. As a general rule, the city nearest the construction site is selected, although variations in climate resulting from topographical features, such as elevation, must be taken into account. The builder then

determines the geographical zone of the selected city and obtains a detailed description of the four reference houses of that zone from Table A.2.

The reference houses listed for each city possess two different levels of building envelope thermal insulation: medium and high. The builder must decide which of these levels most closely describes that of his planned building; the decision identifies the two reference houses to be used in estimating the ACES design parameters for the planned building. An approximate ACES design for the proposed building is obtained by interpolating, on the basis of floor area, between the ACES design parameters listed for the reference houses.

In the sample problem the nearest city to Anderson, Indiana, that is listed in Table B.2 is Indianapolis, Indiana, which lies in geographical zone G. Table A.2 shows that reference houses 3 and 4 in this zone have a high insulation level similar to that of the planned ranch house. The ACES design parameters for the ranch house can now be obtained by linear interpolation between the design parameters listed for these two reference houses in Table B.2. The interpolation is performed according to Eq. (8.3).

$$P_x = P_3 \frac{A_4 - A_x}{A_4 - A_3} + P_4 \frac{A_x - A_3}{A_4 - A_3} ,$$

where P_x, P_3, and P_4 represent ACES design parameters of the ranch house, reference house 3, and reference house 4, respectively; and A_x, A_3, and A_4 are the corresponding floor areas. Work form 1 (shown in Fig. 9.1) lists the estimated ACES design parameters of a brine-chiller system for the planned ranch house.

9.3 Manual Custom-Design Method

After considering the approximate ACES design parameters for the planned ranch house, the builder may decide to install a partial ACES that has a somewhat smaller ice storage bin than the example shown in Fig. 9.1. One reason for this decision might be that the planned location of the ice storage bin is beneath an outdoor patio, where space available is insufficient for a full ACES ice bin. The objective may also be to reduce the

ORNL–DWG 79-21240

RAPID ACES DESIGN

Work Form 1

DATE: AUG 1979

JOB: ANDERSON

Geographical Zone: G
Reference City: Indianapolis
Insulation Level: HIGH

Proposed ACES House: (X): 1800 ft^2
Reference House No. (3): 1200 ft^2
Reference House No. (4): 2400 ft^2

Interpolation Constants:
C(3) = 0.50
C(4) = 0.50

ACES COST AND DESIGN PARAMETERS	PROPOSED ACES HOUSE			REFERENCE HOUSE (3)			REFERENCE HOUSE (4)		
	FULL	PARTIAL	MINIMUM	FULL	PARTIAL	MINIMUM	FULL	PARTIAL	MINIMUM
T, total installed cost, $									
O, operating costs present value, $									
P, present value life-cycle cost, $									
V, wetted volume of ice bin, ft^3	3,199	1,878	557	2,520	1,446	371	3,878	2,311	743
A, area of solar panel, ft^2	25	92	245	0	48	162	50	136	327
L, length of ice bin coil, ft	658	618	533	466	437	370	850	799	695
U, usage of electricity, kWhr/yr	7,826	8,982	10,146	5,652	6,723	7,724	10,000	11,241	12,568
E, efficiency (annual COP)	3.24	2.80	2.47	3.31	2.78	2.42	3.16	2.81	2.51

Fig. 9.1. Completed work form 1 for sample problem.

initial capital costs of the system. On the other hand, the builder may believe that a minimum ACES, which has an ice tank thermal capacity capable of supplying heating needs for only two weeks into January without supplemental solar collection, may not afford a sufficient margin of safety for winter weather conditions in Anderson. For these reasons an ACES may be selected that has an ice storage bin with the recommended R-40 insulation on all surfaces and a latent heat thermal storage capacity large enough to supply all space- and water heating needs of the building throughout January. This section illustrates the procedures to be followed in designing an ACES to meet these conditions.

9.3.1 Determination of thermal loads

The custom design of an ACES requires determination of the design hourly heating load and the monthly loads of the planned building for space heating, water heating, and air conditioning. These thermal loads may be either calculated or derived from available fuel-consumption data. The method of loads determination for the ranch house is based on interpolation between the precalculated loads of the reference houses listed in Table B.2. The interpolation method for estimating the monthly space-cooling demands of the planned building is based on total floor areas, whereas the interpolation method for estimating monthly space-heating demands is based on the calculated design hourly heating loads.

Design hourly heating load

The first step the builder must undertake in performing the custom ACES design analysis is to calculate the design hourly heating load of the planned ranch house, by completing work form 2 according to the detailed instructions provided. Figure 9.2 shows the completed work form for the sample problem; the design hourly heating load for the Anderson, Indiana, ranch house is computed to be 37,985 Btu/h. It should be noted that calculation of the design hourly heating load is also required for properly sizing other heating plants than an ACES.

ORNL–DWG 79-16638R

DESIGN DAY HEAT LOAD

Work Form 2

DATE: AUG 1979 JOB: ANDERSON, IND. RANCH HOUSE

Indoor Air Temperature: TSW = 70 °F
Outdoor Air Temperature: TDD = -2 °F
Ground Temperature: TG = 49.1 °F

House Volume: VOL = 14,400 FT^3
Air Change Rate*: ACH = 0.958 AC/HR
Wind Speed: V = 12 MPH

EXPOSURE	EXTERIOR BUILDING SURFACES	NORTH (or horizontal)			SOUTH (or horizontal)			EAST (or horizontal)			WEST (or horizontal)			HEAT LOSS (Btu/hr)
		A	U	ΔT	A	U	ΔT	A	U	ΔT	A	U	ΔT	
ABOVE GRADE	WALLS	426	1/15	72	426	1/15	72	186	1/15	72	186	1/15	72	5875
	DOORS													
	GLASS AREAS	54	0.62	72	54	0.62	72	54	0.62	72	54	0.62	72	9642
	CEILING	1800	1/40	72										3240
	FLOOR													
BELOW GRADE	FLOOR	1800	1/14	10.45										1344
	WALLS													
CHECK OF TOTAL VERTICAL AREAS		480			480			240			240	CONDUCTION HEAT RATE =		20,101
INFILTRATION HEAT LOSS RATE: [0.018 X VOL X ACH X (TSW – TDD)] =														17,884
TOTAL DESIGN DAY HEAT LOSS RATE: (CONDUCTION + INFILTRATION) =														37,985

$$^{*}ACH = N\left[\frac{0.15 + 0.013V + 0.005\Delta T}{0.695}\right]$$ where $\Delta T = TSW - TDD$, V = average wind speed (mph), and $N \geq 1$.

Fig. 9.2. Completed work form 2 for sample problem.

Monthly space-heating loads

The builder should next estimate the monthly space-heating loads of the ranch house. The estimate is made by linear interpolation between the loads of the reference houses listed in Table B.2 according to Eq. (8-4),

$$Q_X = Q_3 \frac{D_4 - D_X}{D_4 - D_3} + Q_4 \frac{D_X - D_3}{D_4 - D_3} ,$$

where Q_X, Q_3, and Q_4 are the design monthly heating loads of the ranch house, reference house 3, and reference house 4, respectively; and D_X, D_3, and D_4 are the corresponding design hourly heating loads. The ranch house monthly space-heating loads estimated in this manner are entered in column A of work form 3. The estimated monthly space-heating loads for the sample problem are shown in Fig. 9.3.

Monthly water-heating loads

Monthly water-heating loads for the Indianapolis region, based on a hot water consumption rate of 70 gpd and a hot water storage temperature of 120°F, are listed in Table B.2. For the sample problem these water-heating loads should be entered directly in column B of work form 3. Figure 9.3 shows the estimated water-heating thermal requirements for the sample problem.

Monthly space-cooling loads

Monthly space-cooling requirements of the ranch house should be estimated by linear interpolation between the cooling demands of reference houses 3 and 4 listed in Table B.2, according to Eq. (8.5),

$$Q_X = Q_3 \frac{A_4 - A_X}{A_4 - A_3} + Q_4 \frac{A_X - A_3}{A_4 - A_3} ,$$

where Q_X, Q_3, and Q_4 are the design monthly cooling demands of the ranch house, reference house 3, and reference house 4, respectively; and A_X,

ORNL–DWG 79-16639 R

ACES DESIGN MONTHLY LOADS

Work Form 3

DATE: AUG 1979 JOB: ANDERSON

MONTH	A CALCULATED LOADS SPACE HEAT q_H MBtu	B CALCULATED LOADS WATER HEAT q_{HW} MBtu	C CALCULATED LOADS SPACE COOL q_C MBtu	D SELECTED ACES DESIGN LOADS SPACE HEAT q_H MBtu	E SELECTED ACES DESIGN LOADS WATER HEAT q_{HW} MBtu	F SELECTED ACES DESIGN LOADS TOTAL HEAT q_{HT} MBtu	G SELECTED ACES DESIGN LOADS SPACE COOL q_C MBtu
Jan	9555	1580	0	10511	1580	12091	0
Feb	7024	1450	0	7726	1450	9176	0
Mar	5876	1560	0	6464	1560	8024	0
Apr	2573	1390	875	2830	1390	4220	963
May	999	1290	2300	1099	1290	2389	2530
Jun	0	1110	4815	0	1665	1665	5297
Jul	0	1040	6280	0	1560	1560	6908
Aug	0	1010	5865	0	1515	1515	6452
Sep	0	1030	3770	0	1030	1030	4147
Oct	1822	1180	1260	2004	1180	3184	1386
Nov	5014	1290	0	5515	1290	6805	0
Dec	8127	1480	0	8940	1480	10420	0
TOTAL	40990	15410	25165	45089	16990	62079	27683

Fig. 9.3. Completed work form 3 for sample problem.

A_3, and A_4 are the corresponding total floor areas. The resulting monthly cooling requirements of the ranch house are entered in column C of work form 3. Estimated monthly cooling loads for the sample problem are shown in Fig. 9.3.

Aces design monthly loads

The monthly thermal loads entered in columns A, B, and C of work form 3 shown in Fig. 9.3 represent first estimates of the monthly thermal needs of the ranch house during an average weather year. The ACES, however, can be designed to supply either these loads or any other set of thermal loads that the builder might select. That is, at this stage of the ACES design analysis, the builder can modify first estimates of monthly loads as dictated by judgment or to reflect special circumstances related to proposed building design and anticipated usage. Modifications to the first estimates of the monthly space- and water-heating loads are entered in columns D and E of work form 3 and their sum is entered in column F. These loads, together with the revised cooling-load estimates listed in column G, become the ACES design monthly loads. That is, the capacity of the ACES as designed allows delivery of the monthly heating and cooling loads listed in the last two columns of the work form shown in Fig. 9.3.

In the sample problem, for example, the builder notes that the first estimates of the monthly space-heating and space-cooling loads for the planned ranch house do not take into account possible heat losses (or gains) in the air ducts. Because some of the air ducts of the planned ranch house are to be installed in unconditioned space, the builder estimates that duct losses (or gains) will amount to about 10% of the delivered loads. For this reason the builder increases the monthly ACES design heating and cooling loads by 10% over the first estimates. In addition, the builder judges that the assumed hot water consumption rate for the reference houses, 70 gpd, is not adequate during the summer months for a family of four with two teenage children. He decides to increase the water-heating loads for the months of June, July, and August by 50% over the values listed in Table B.2. Figure 9.3 shows the ACES design monthly thermal loads that are assumed for the sample problem.

9.3.2 Component size and system performance

Heat pump mechanical package

The heat pump model selected for an ACES application should have a heating capacity that exceeds by as little as possible the design hourly heat loss of the building. (In special cases where the estimated design hourly cooling load is much greater than the design hourly heating load of the building, the heat pump model must be selected on the basis of its cooling capacity.) For the sample problem it is assumed that heat pump mechanical packages having heating capacity ratings of 30,000, 45,000, 60,000, and 75,000 Btu/h are available, as shown in Table 4.1. Heat pump mechanical package model HP-2 should be selected for the partial ACES of the sample problem because it is the smallest available unit having a heating capacity sufficient to meet the estimated 37,985 Btu/h design hourly heat loss of the planned ranch house.

Modal operating parameters

After the heat pump mechanical package has been selected, the efficiency of the ACES in its principal modes of operation can be estimated by using work form 4, shown in Fig. 9.4. For the sample problem the power draws and performance ratings of the ACES components are summarized in Fig. 9.4. These data, taken from Table 4.1 (Sect. 4.1) and converted where necessary to the proper units, pertain to heat pump model HP-2 which was selected for the sample problem on the basis of its rated heating capacity. The modal COPs and bin transfer coefficients for the basic modes of operation are calculated from these data, using the definitions given in Sect. 2, as shown below:

$$COP_I(H) = \frac{(1 + C_C)E_C + E_F + E_{HB} + 0.75E_{CB}}{E_C + E_F + E_{HB} + E_{CB}}$$

$$= \frac{(3.01)4.548 + 0.79 + 0.33 + 0.75(0.24)}{5.908} = 2.537 \qquad (2.2)$$

ORNL–DWG 79-21241

ACES MODAL OPERATING PARAMETERS

Work Form 4

DATE: AUG 1979 JOB: ANDERSON

ANNUAL CYCLE ENERGY SYSTEM	ICE PHASE		SUPPLEMENTAL PHASE		
	HEATING	COOLING	HEATING	COOLING	BIN REJECT
POWER EQUIPMENT:					
Heat pump compressor, E_C kW	4.548	X	4.548	X	4.230
Indoor fan coil, E_F kW	0.790	0.790	X	0.790	X
Cold brine pump, E_{CB} kW	0.240	0.240	0.240	0.240	0.240
Hot brine pump, E_{HB} kW	0.330	X	X	X	0.330
Hot water pump, E_{HW} kW	X	X	0.130	X	X
Outdoor fan coil, E_{OF} kW	X	X	X	X	0.580
Total Electrical Draw, E_T kW	5.908	1.030	4.918	1.030	5.380
COMPONENT RATINGS:					
Evaporator-side compressor COP	2.01	X	2.01	X	2.55
Indoor fan coil, H Btu/hr	X	47,300	X	33,900	X
Desuperheater, H_{DH} Btu/hr	X	X	9,000	X	X
Condenser, H_{CD} Btu/hr	X	X	36,000	X	X
MODAL OPERATING PARAMETERS:	$COP_I(H)$	$COP_I(C)$	$COP_S(H)$	COP(BD)	COP(BR)
System performance, $COP_P(M)$*	2.537	12.69	2.682	8.88	1.993
Bin transfer coefficients, $\alpha_P(M)$*	0.606	1.065	0.663	1.093	1.00
	$\alpha_I(H)$	$\alpha_I(C)$	$\alpha_S(H)$	$\alpha_S(C)$	

(*P denotes phase of the annual cycle, M denotes operating mode.)

Fig. 9.4. Completed work form 4 for sample problem.

$$COP_I(C) = \frac{H_I - E_F}{E_F + E_{CB}} = \frac{13.86 - 0.79}{1.03} = 12.69 \tag{2.6}$$

$$COP_S(H) = \frac{H_{DS} + H_{CD}}{E_C + E_{CB} + E_{HW}} = \frac{2.64 + 10.55}{4.918} = 2.682 \tag{2.9}$$

$$COP(BD) = \frac{H_S - E_F}{E_F + E_{CB}} = \frac{9.94 - 0.79}{1.03} = 8.88 \tag{2.11}$$

$$COP(BR) = \frac{C_S(E_C) - 0.25E_{CB}}{E_C + E_{CB} + E_{HB} + E_{OF}} = \frac{2.55(4.23) - 0.25(0.24)}{5.38}$$

$$= 1.993 \tag{2.14}$$

$$\alpha_I(H) = \frac{COP_I(H) - 1}{COP_I(H)} = \frac{1.537}{2.537} = 0.606 \tag{2.4}$$

$$\alpha_I(C) = \frac{H_I + 0.25E_{CB}}{H_I - E_F} = \frac{13.86 + 0.25 \times 0.24}{13.86 - 0.79} = 1.065 \tag{2.7}$$

$$\alpha_S(H) = \frac{C_S \cdot E_C - 0.25E_{CB}}{E_C(1 + C_S)} = \frac{2.01(4.548) - 0.25(0.24)}{4.548(3.01)}$$

$$= 0.663 \tag{2.10}$$

$$\alpha_S(C) = \frac{H_S + 0.25E_{CB}}{H_S - E_F} = \frac{9.94 - 0.25(0.24)}{9.94 - 0.79} = 1.093 \tag{2.12}$$

The system COP in the supplemental cooling mode of operation is given by Eq. (2.16).

$$COP_S(C) = [COP(BD)^{-1} + K_o \cdot COP(BR)^{-1}]^{-1} ,$$

where the constant K_o is defined by Eq. (2.17),

$$K_o = \alpha_S(C) + \frac{Q_L(SP)}{Q_C(SP)} - \alpha_S(H) \cdot \frac{Q_{HT}(SP)}{Q_C(SP)} .$$

Here, the symbols $Q_C(SP)$ and $Q_{HT}(SP)$ represent delivered cooling and heating loads during the supplemental phase of annual operations and $Q_L(SP)$ is the heat leakage into the ice bin during this period. These values must first be determined for the sample problem before $COP_S(C)$ can be calculated.

Ice bin volume

In the sample problem the volume of the ice storage bin is determined by the decision of the builder that the ice bin must have a latent heat storage capacity that will allow the ACES to deliver all of the space-heating and water-heating needs of the building during January, without supplemental heat from solar heat collection. When the ACES operates in the heating mode the fraction of the total delivered heat that comes from the ice storage bin is $\alpha_I(H)$. For the ACES to supply all of the January heating needs of the building, $q_{HT}(1)$, the ice bin must have an effective storage volume [Eq. (4.2)] of:

$$V = q_{HT}(1) \cdot \alpha_I(H)/[(0.8)(8.208)] .$$

For the sample problem, $q_{HT}(1)$ is obtained from the work form shown in Fig. 9.3 and the bin transfer coefficient, $\alpha_I(H)$, is obtained from Fig. 9.4. These values are: $q_{HT}(1) = 12{,}091$ and $\alpha_I(H) = 0.606$. When these values are inserted into the above expression, the required effective storage volume of the ice bin is determined to be 1116 ft^3.

Note that the effective storage volume of the ice bin is not the same as the total tank volume, but represents the wetted volume that must be available in the bin to contain the mixture of water and ice. Additional space, for ice ballasting and for freeboard access above the surface of the water, must be taken into account in determining the overall bin dimensions.

Ice-bin thermal capacity

In addition to latent heat storage, the ice bin can also store sensible heat, corresponding to a bin temperature of up to 45°F. The total heat-storage capacity (MBtu), latent and sensible, of the bin is denoted by TCAP and is obtained from Eq. (2.22),

$$TCAP = V_{WET}\,[8.1378(PF) + 0.8112]\ .$$

For the sample problem the wetted tank volume is V = 1116 ft^3 and the ice packing fraction is PF = 0.80. The total thermal capacity of the ice bin is found to be: TCAP = 8171 MBtu.

Ice-bin heat exchanger

The principal design criteria for the ice-bin heat exchanger are that it must be able to deliver heat to the evaporator at a rate that allows the heat pump to operate at its design heat output and evaporation temperature, and that a sufficient number of parallel flow paths must be provided in the tubing circuit to yield an adequate brine flow rate, at a reasonable pumping power. The design procedures for achieving these objectives are discussed in Sect. 4.3 of this report. These procedures are illustrated below for the sample problem.

1. Determine the evaporator rating of the selected heat pump from Table 4.1. The evaporator rating for the heat pump in the sample problem is found to be: H_{EV} = 31,150 Btu/h.

2. Determine the energy extraction density, ERD, according to Eq. (4.7),

$$ERD = H_{EV}/V_{WET}\ ,$$

in Btu/h/ft^3. For the sample problem the energy extraction density, or the heat extraction rate per unit volume of ice bin, is: ERD = 31,150/1,116, or 27.9 Btu/h/ft^3.

3. Determine the lattice spacing of the heat-exchanger tubing that corresponds to an energy extraction density of 27.9 and an average brine temperature of 15°F. From Fig. 4.2 (Sect. 4.3.2) the lattice spacing of the ice-bin heat exchanger tubing for the sample problem is found to be: D = 15.52 in., which is rounded off to 16 in.

4. Determine the total length (ft) of heat-exchanger tubing that is required in the ice bin. This is done using the following expression obtained from Eq. (4.8),

$$L = 144 \cdot V_{WET}/D^2 ,$$

where V_{WET} is the wetted volume of the tank in ft^3, and D is the lattice spacing in inches of the heat-exchanger tubes. For the sample problem the total length of heat-exchanger tubing required is found to be: L = 628 ft.

5. Determine the brine composition that has a freezing point well below the winter design-day temperature of Indianapolis, listed in Table B.2 as -2°F. From Table 4.3 in Sect. 4.3.3, the brine composition selected is 35% by weight methanol in water, which freezes at -21°F. The K values listed in Table 4.3 for this brine composition are: K_1 = 10,108 and K_2 = 2159.

6. Determine the maximum number of parallel flow paths for the heat-exchanger tubing in the ice storage bin that will still yield turbulent brine flow according to the expression: $N_{MAX} = H_{EV}/K_1$, where the computed value of N_{MAX} is rounded off to the next lower integer. For the sample problem N_{MAX} = 3. This means that, if the 628-ft length of heat-exchanger tubing is segmented into more than three parallel flow paths, turbulent brine flow will not be achieved.

7. Determine the minimum number of parallel flow paths that can be provided for the heat-exchanger tubing in the ice storage bin and still yield a pressure drop resulting from friction that is less than

6 psi using the graph in Fig. 4.4 of Sect. 4.3.3. The value of N_{MIN} obtained from Fig. 4.4 must be rounded off to the next higher integer. For the sample problem, $N_{MIN} = 4$. This means that, unless the 628 ft of heat exchanger tubing is segmented into four or more parallel flow paths, the pressure drop resulting from friction, occurring across each branch of brine flow, will exceed 6 psi.

8. Determine the number of parallel flow paths that will be provided. The results of steps 6 and 7 reveal that turbulent brine flow cannot be achieved with a pressure drop of 6 psi, or less. Therefore, the condition yielding an acceptable pressure drop is selected. For the sample problem the ice-bin heat exchanger tubing, consequently, should be segmented into four equal-length parallel flow paths.

Ice storage-bin dimensions

The ice storage bin of the sample problem is constructed by pouring concrete into prefabricated polystyrene molds, 16 in. high by 48 in. long, that are reinforced by vertical steel rods passing through the center of the plastic-form blocks. The plastic forms contribute an insulating value of approximately R-16 to the tank walls. This type of ice-bin construction is depicted in Fig. 5.1 (Sect. 5.1.3). For the sample problem an overall bin height of 8 ft is chosen, corresponding to six tiers of the foam-form molds. However, not all of this height is available for water storage because space must be reserved for ice ballast and for freeboard access above the surface of the water. If a concrete slab is used for ice ballast, its thickness must be at least 6% of the effective ice storage height of the bin. At least 6 to 12 in. of free space between the water level and the inside surface of the bin lid should be provided for anchoring the bin liner.

The lattice spacing of the ice-bin heat exchanger tubes, for the sample problem, has been determined to be 16 in. This means that, at most, five 16-in.-diam. ice logs can be stacked horizontally on top of one another in the 8-ft-high storage bin. Thus the effective ice storage height of the bin is 80 in., or 6.67 ft, leaving 6 in. for ballast at the bottom and 10 in. for access space at the top of the tank. For the sample

problem the length of the ice storage bin is selected to be 12 lattice spacings, or 16 ft. Then, to yield an effective ice-storage volume of 1116 ft^3, the width of the bin must be

$$W = \frac{V_{WET}}{(H \cdot L)} = \frac{1116}{(6.67)(16)} = 10.5 \text{ ft} . \tag{9.1}$$

Based upon these dimensions of the ice bin, the heat flow areas of the bin are: for the top, A_T = 168 ft^2; for the bottom, $A_B = A_T$; and for the sides, A_S = 424 ft^2. In computing the rate of heat flow from the surroundings into the bin, an insulation value of R-40 is assumed for all of the storage-bin surfaces.

Solar-collector panel

The size of the solar/convector panel is determined by filling out work form 5 according to the instructions provided. Figure 9.5 shows the completed work form for the sample problem; the solar panel area needed for the planned ranch house is computed to be 150 ft^2. The steps required for filling out work form 5 are illustrated below.

1. In column A fill in the 12 thermal loads imposed upon the ice bin by the building demands for heating and cooling. Calculate the ice-bin thermal loads by Eq. (8.9):

$$q_{HSE}(m) = \alpha_I(C) \cdot q_C(m) - \alpha_I(H) \cdot q_{HT}(m) .$$

For the sample problem $\alpha_I(C) = 1.065$, $\alpha_I(H) = 0.606$ and the ACES design monthly thermal loads for the planned ranch house are obtained from work form 3 (Fig. 9.3). The above equation, evaluated for the month of January, yields:

$$q_{HSE}(1) = (1.065)(0) - 0.606(12{,}091) \text{ MBtu},$$

or

ORNL–DWG 79-16645

SOLAR PANEL SIZE

Work Form 5

DATE: AUG 1979 JOB: ANDERSON

Part 1

MONTH	A ICE BIN HEAT FLOWS FROM House Loads q_{HSE} MBtu	B Ground Leakage q_L MBtu	C Solar Panel q_{COL} MBtu	D NET BIN LOAD q_{NET} MBtu	E BIN HEAT DEPOSIT q_{DEP} MBtu	F SOLAR PANEL RATING PAN MBtu/ft^2	G FULL MELT PANEL AREA A_{FM} ft^2
Jan	-7327	+133	+2823	-4371	-7194	18.79	382.9
Feb	-5561	+96	+4179	-1286	-5465	27.82	196.4
Mar	-4863	+125	+4738	0	-4738	51.08	92.8
Apr	-1532	+181	+1351	0	-1351	90.91	14.9
May	+1247	+278	0	+1525	+1525	117.24	0
Jun	+4632	+359	0	+4991	+4991	130.71	0
Jul	+6412	+443	0	+6855	+6855	136.30	0
Aug	+5953	+473	0	+6426	+6426	133.97	0
Sep	+3792	+439	0	+4231	+4231	121.67	0
Oct	-453	+389	+64	0	-64	92.24	0.7
Nov	-4124	+290	+3834	0	-3834	47.46	80.8
Dec	-6315	+205	+3596	-2514	-6110	23.94	255.2

$\alpha_1(C)$ = 1.065 $\alpha_1(H)$ = 0.606, TCAP = 8171 MBtu, A_T = 168 ft^2, A_{SD} = 424 ft^2.

Part 2

IT. NR.	MONTHS INCLUDED IN THE SUMMATION	α = (β – TCAP)	β = $-\Sigma\, q_{DEP}$	γ = Σ PAN	A_{PAN} α/γ
1	DEC, JAN	5133	13304	42.73	120.1
2	DEC, JAN, FEB	10598	18769	70.55	150.2
3					
4					
5					

Fig. 9.5. Completed work form 5 for sample problem.

$$q_{HSE}(1) = -7327 \text{ MBtu} .$$

A negative sign for q_{HSE} denotes heat extraction from the ice bin, whereas a positive sign denotes a heat deposit in the bin.

2. In column B fill in the 12 values of ground heat leakage into the ice bin. Calculate the ground heat leakage q_L, using Eq. (8.10):

$$q_L(m) = A_T \cdot TB(m) + A_S \cdot SD(m) ,$$

in MBtu, where the monthly ice-bin heat leakage coefficients, TB(m) and SD(m), are obtained from Table B.2 (Appendix B). For the sample problem the ice-bin heat transfer areas are: $A_T = 168 \text{ ft}^2$ and $A_S = 424 \text{ ft}^2$. The ground heat leakage for the month of January is:

$$q_L(1) = (168)(0.315) + (424)(0.190) \text{ MBtu} ,$$

or

$$q_L(1) = 133 \text{ MBtu} .$$

3. In column E fill in the 12 values of the thermal loads imposed upon the ice bin as a result of ground heat leakage and the building thermal loads. These values are obtained by summing algebraically for each month the values entered in columns A and B as shown in Eq. (8.11):

$$q_{DEP}(m) = q_{HSE}(m) + q_L(m) ,$$

in MBtu. The ice-bin heat deposit for the month of January is:

$$q_{DEP}(1) = (-7327 + 133) \text{ MBtu} ,$$

or

$$q_{DEP}(1) = -7194 \text{ MBtu} .$$

4. In column F fill in the 12 values of the solar panel heat-collection capacity, PAN(m), obtained from Table B.2 of Appendix B. In column G fill in values of the full-melt panel area, $A_{FM}(m)$, only for those months having a net heat extraction (negative values in column E) from the ice bin. Calculate the full-melt panel area (ft^2) by means of Eq. (8.12):

$$A_{FM}(m) = -q_{DEP}(m)/PAN(m) \ .$$

The full-melt panel area for the month of January is:

$$A_{FM}(1) = 7194/18.79 \ ft^2 \ ,$$

or

$$A_{FM}(1) = 382.9 \ ft^2 \ .$$

5. In column E, starting with the largest monthly heat withdrawal, sum in descending order until $\beta = -\sum q_{DEP}(m)$ exceeds the thermal storage capacity, TCAP, of the ice bin. Record in part 2 of work form 5 the value of β obtained and the indices of the months summed. For the sample problem TCAP = 8171 BMtu and β = -(-7194 - 6110) MBtu, or β = 13,304 MBtu.

6. In column F sum the panel capacities over the same span of months used in obtaining β and record the answer, $\gamma = \sum PAN(m)$, in part 2 of work form 5. Calculate and record the quantity, $\alpha = \beta$ - TCAP, in part 2 of work form 5, and compute the first iteration of the required panel size by the expression, $A_{PAN} = \alpha/\gamma$, as shown in work form 5. For the sample problem, α = (13,304 - 8,171) MBtu and γ = (18.79 + 23.94) MBtu/ft^2. The value of A_{PAN} obtained for the sample problem is:

$$A_{PAN} = \frac{5133}{42.73} = 120.1 \ ft^2 \ .$$

7. If A_{PAN} exceeds the full-melt panel areas, $A_{FM}(m)$, of all months not included in the summation that determined A_{PAN}, the iteration process is completed. If A_{PAN} is less than $A_{FM}(m)$ for one of the months not included in the summation, the span of months to be summed must be expanded to include that particular month and the iteration process must be continued. In the sample problem it is seen that the value of A_{PAN} obtained is less than the value of A_{FM} for the month of February. Therefore, the iteration process must be continued. Increasing the span of months to include December, January, and February yields a second iteration panel area of 150.2 ft^2. This new value of A_{PAN} satisfies the above criterion and the iteration is completed.

8. In column C fill in the 12 values of the heat collected by the solar panel during each month of the year. These values, $q_{COL}(m)$, are calculated for each month in the following manner:

   If $q_{DEP}(m)$, which is listed in column E, is positive, then $q_{COL}(m) = 0$.

   If the month under consideration is included in the span of months summed in part 2 of work form 5, then $q_{COL}(m) = A_{PAN} \cdot PAN(m)$. That is, the panel operates at full capacity during these months.

   If the month under consideration is not included in the span of months summed, then $q_{COL}(m) = -q_{DEP}(m)$ (i.e., the panel is operated at less than full capacity to melt out only the amount of ice formed during the month).

9. In column D, fill in the 12 values of the net thermal load imposed upon the ice bin, as calculated by Eq. (8.13):

$$q_{NET}(m) = q_{HSE}(m) + q_L(m) + q_{COL}(m) \ .$$

For the sample problem we obtain,

$$q_{NET}(1) = [-7327 + 133 + 2823] \text{ MBtu} \ ,$$

or

$$q_{NET}(1) = -4371 \text{ MBtu} .$$

ACES power consumption

The annual power consumption of the ACES is determined by filling out work form 6 according to the instructions provided in Sect. 8.3. Figure 9.6 shows the completed work form for the sample problem. The annual energy consumption of the ACES is computed to be 34,865 MBtu, or 10,218 kWh, and the annual COP of the system when supplying the design monthly thermal loads shown in Fig. 9.3 is 2.58. The steps required for filling out work form 6 are illustrated below for the sample problem.

Part 1

1. In column A of work form 6 fill in the 12 ACES design monthly heating loads, $q_{HT}(m)$, as obtained from column F of work form 3.

2. In column B fill in the 12 ACES design monthly cooling loads, as obtained from column G of work form 3.

3. In column C fill in the 12 monthly loads imposed upon the ice bin as a result of the building thermal demands, ground heat leakage, and heat deposits by the solar collector panel. These values of $q_{NET}(m)$ are obtained from column D of work form 5.

4. From work form 5, shown in Fig. 9.5, determine the month that marks the start of the heating season by identifying the month for which $q_{DEP}(m)$ first assumes a negative value. For the sample problem this month is October; thus, September marks the last month of the supplemental phase and October marks the first month of the ice phase of annual operations.

   Compute the total heat content of the ice storage bin (MBtu) present at the end of October according to Eq. (8.14):

ORNL–DWG 79-16646

ACES POWER CONSUMPTION

Work Form 6

DATE: AUG 1979 JOB: ANDERSON

Part 1

MONTH	A HEATING LOAD q_{HT} MBtu	B COOLING LOAD q_C MBtu	C BIN LOAD q_{NET} MBtu	D BIN HEAT LEVEL q_{TOT} MBtu	E SUPPLEMENTAL PHASE HEATING $q_{HT}(SP)$ MBtu	F SUPPLEMENTAL PHASE COOLING $q_C(SP)$ MBtu	G SUPPLEMENTAL PHASE LEAKAGE $q_L(SP)$ MBtu
Jan	12091	0	-4371	1286	0	0	0
Feb	9176	0	-1286	0	0	0	0
Mar	8024	0	0	0	0	0	0
Apr	4220	963	0	0	0	0	0
May	2389	2530	+1525	1525	0	0	0
Jun	1665	5297	+4991	6516	0	0	0
Jul	1560	6908	+6855	8171	1183	5240	168
Aug	1515	6452	+6426	8171	1515	6452	237
Sept	1030	4147	+4231	8171	1030	4147	220
Oct	3184	1386	0	8171	0	0	0
Nov	6805	0	0	8171	0	0	0
Dec	10420	0	-2514	5657	0	0	0
TOTAL	62079	27683	TCAP =	8171	3728	15839	625

$$K_O = \alpha_S(C) + \frac{O_L(SP)}{O_C(SP)} - \alpha_S(H) \cdot \frac{O_{HT}(SP)}{O_C(SP)} = (1.093) + \frac{(625)}{(15839)} - (0.663) \cdot \frac{(3728)}{(15839)} = \underline{0.9764}.$$

$$COP_S(C) = \left(\frac{1}{COP(BD)} + \frac{K_O}{COP(BR)}\right)^{-1} = \left(\frac{1}{(8.88)} + \frac{K_O}{(1.993)}\right)^{-1} = \underline{1.660}.$$

Part 2

SYSTEM PERFORMANCE	ICE PHASE HEATING	ICE PHASE COOLING	SUPPLEMENTAL PHASE HEATING	SUPPLEMENTAL PHASE COOLING	ANNUAL CYCLE
Delivered loads, MBtu	58351	11844	3728	15839	89762
Power consumption, MBtu	23000	933	1390	9542	34865
COP	2.537	12.69	2.682	1.660	2.575

Fig. 9.6. Completed work form 6 for sample problem.

$$q_{TOT}(m) = TCAP + q_{NET}(m) ,$$

where the values of TCAP and $q_{NET}(m)$ are obtained from work form 6, shown in Fig. 9.6. Evaluation of the above expression with respect to the sample problem yields:

$$q_{TOT}(10) = 8171 + 0 \text{ MBtu} .$$

For the month of October the value 8171 is entered in column D of work form 6 and zeros are entered in columns E, F, and G.

5. For each succeeding month, m, compute a value of $q_{TOT}(m)$, in MBtu, by the recursion relationship according to Eq. (8.15):

$$q_{TOT}(m) = q_{TOT}(m - 1) + q_{NET}(m) .$$

Successive evaluations of this relationship for the sample problem yield:

$$q_{TOT}(11) = 8171 + 0 = 8171 \text{ MBtu}$$
$$q_{TOT}(12) = 8171 - 2514 = 5657 \text{ MBtu}$$
$$q_{TOT}(1) = 5657 - 4371 = 1286 \text{ BMtu}$$
$$q_{TOT}(2) = 1286 - 1286 = 0 \text{ MBtu}$$
$$q_{TOT}(3) = 0 \text{ MBtu}$$
$$q_{TOT}(4) = 0 \text{ MBtu}$$
$$q_{TOT}(5) = 0 + 1525 = 1525 \text{ MBtu}$$
$$q_{TOT}(6) = 1525 + 4991 = 6516 \text{ MBtu}$$

The monthly variation in the total heat content of the ice storage bin, shown above, illustrates the ice phase of annual system operations. Ice buildup occurs during December, January, and February; and full ice inventory is reached by the end of February. The full ice inventory is maintained through March and April, and ice decline begins in May as heat is deposited in the ice bin,

providing space cooling. By the end of June the winter-formed ice is nearly depleted. The values of q_{TOT} listed above are entered into column D of work form 6, and the supplemental phase heat flows for the corresponding months are set equal to zero.

For the month of July a value of $q_{TOT}(7)$ is obtained that exceeds the thermal capacity of the ice bin:

$$q_{TOT}(7) = 6516 + 6855 = 13,371 \text{ MBtu} .$$

Then, the fraction of the July heating and cooling loads that must be supplied while the system is operating in the supplemental phase is expressed by Eq. (8.16):

$$F = \frac{q_{TOT}(m) - TCAP}{q_{NET}(m)} .$$

For the sample problem,

$$F = \frac{13,371 - 8,171}{6,855} = 0.7586 ,$$

and for the month of July the following values are entered respectively into columns D, E, F, and G of work form 6.

$$q_{TOT}(7) = 8171 \text{ MBtu}$$
$$q_{HT}(SP) = (0.7586)(1560) = 1183 \text{ MBtu}$$
$$q_C(SP) = (0.7586)(6908) = 5240 \text{ MBtu}$$
$$q_L(SP) = (0.7586)(443)/2 = 168 \text{ MBtu}$$

Supplemental phase operations continue throughout August and September. For these months F is equal to unity, so that the full heating and cooling loads, listed in columns A and B, are entered into columns E and F. The ice-bin heat leakage, $q_L(SP)$, is obtained by halving the bin heat leakage value listed in column B of work form 5.

6. The system cooling COP in the supplemental phase of operations is calculated from Eqs. (8.17) and (8.18),

$$COP_S(C) = [COP(BD)^{-1} + K_o \cdot COP(BR)^{-1}]^{-1} ,$$

where

$$K_o = \alpha_S(C) + \frac{Q_G}{Q_F} - \alpha_S(H) \frac{Q_E}{Q_F} .$$

Values of Q_E, Q_F, and Q_G are obtained by summing the entries in columns E, F, and G of work form 6. The results obtained for the sample problem are:

$$K_o = 1.093 + \frac{625}{15,839} - 0.663 \cdot \frac{3728}{15,839} = 0.9764 ,$$

and

$$COP_S(C) = [8.88^{-1} + 0.9764(1.993)^{-1}]^{-1} = 1.660 .$$

Part 2

1. On line 1, enter the annual heating and cooling loads that are delivered to the building during the ice phase and the supplemental phase of annual operations. The values are obtained from part 1 of the work form as follows:

$Q_{HT}(IP)$ = 62,079 - 3,728 = 58,351 MBtu;
$Q_C(IP)$ = 27,683 - 15,839 = 11,844 MBtu;
$Q_{HT}(SP)$ = 3,728 MBtu; and
$Q_C(SP)$ = 15,839 MBtu.

2. On line 3, enter the modal COPs of the system that have been calculated for the sample problem. These values are:

   $COP_I(H) = 2.537$;
   $COP_I(C) = 12.69$;
   $COP_S(H) = 2.682$; and
   $COP_S(C) = 1.660$.

3. For the sample problem calculate the electrical energy consumed by the system during each mode of operation. For each column of part 2 divide the entry on line 1 by the entry on line 3, and enter the result on line 2. Sum the entries of line 1 to obtain the total annual load delivered by the system. Sum the entries of line 2 to obtain the total purchased energy consumed by the system during the year. The annual COP of the system, ACOP, is the ratio of the annual delivered loads to the annual energy consumption. For the sample problem the annual COP of the ACES is 89,762 MBtu/34,865 MBtu, or 2.575. The annual consumption of electricity by the system is 34,865 MBtu or, dividing by 3.412 MBtu/kWh, 10,218 kWh.

9.4 System Costs

The life-cycle cost of the ACES is the total investment that would be required today for purchasing the system and prepaying all of the costs for maintenance and electrical power over the expected lifetime of 20 years. For the sample problem the average escalation rate of maintenance and power costs during this period of time is assumed to amount to 8% per year, and the personal discount rate of the owner is is assumed to be 10%. The life-cycle cost of the ACES is given by Eq. (7-1):

$$P = (IC - SV) + (MC + PC) ,$$

where

P = present value life-cycle cost of the system,

IC = initial, installed cost of the ACES,

SV = discounted salvage value or residual worth of the ACES,

MC = present worth of annual maintenance costs,

PC = present worth of annual expenditures for electrical power.

Each of these life-cycle cost components are now estimated for the sample problem.

9.4.1 Life-cycle cost components

Initial cost

The initial, installed cost of an ACES is comprised of costs for the purchase and installation of factory-built components and costs for components that are built onsite. The costs of factory-built components, such as the heat pump mechanical package, the control system, hot water tank, etc., are obtained from price listings of manufacturers, whereas the costs of components constructed onsite must be estimated by the builder. In general, the costs of these components, such as the ice storage bin, the ice-bin heat exchanger, the solar panel, etc., are estimated on the basis of local unit costs for materials and labor. In most cases the installed unit costs of these components can be estimated approximately by doubling the unit costs of the materials.

Figure 9.7 shows the costs of factory-built components and the unit installed costs of components constructed onsite that were assumed for the sample problem. These assumed costs are for purposes of illustration only and should not be taken to represent actual construction costs in the Anderson, Indiana, area. In Fig. 9.7 the assumed costs of factory-built components of the ACES that are not yet commercially available are inferred from the costs of similar products currently on the market. Firm costs for these components and for the solar collector panel can be established only when the ACES has become more widely deployed. Based upon the assumed costs listed in the figure, the first cost of the ACES for the sample problem is $9970.

ORNL-DWG 79-16650A

ACES LIFE CYCLE COST

Work Form 7

DATE: AUG 1979 JOB: ANDERSON

COMPONENT	ITEM	ITEM QUANTITY	UNIT MATERIAL COST	TOTAL MATERIAL COST	ESTIMATE INSTALL COST	ITEM INSTALLED COST
Mechanical Package	Heat Pump H.P.-2	3¾ tons	2750			2750
			SUBTOTAL			
Ice Storage Bin	Wall construction	424 ft²	2.11 $/ft²			895
	Floor construction	168 ft²	2.33 $/ft²			390
H = ft	Top construction	168 ft²	3.59 $/ft²			605
W = ft	Footing construction	53 ft	5.92 $/ft			315
L = ft	Wall insulation, 4 in.	1696 bd-ft	0.18 $/bd-ft			305
V_{TOT} = ft³	Floor insulation, 7 in.	1176 bd-ft	0.18 $/bd-ft			210
V_{WET} = ft³	Top insulation, 7 in.	1176 bd-ft	0.18 $/bd-ft			210
	Water-proof liner	592 ft²	0.25 $/ft²			150
	Other, excavation					0
			SUBTOTAL			3080
Ice Bin Heat Exchanger	Tubing	628 ft	1.50 $/ft			940
	Other					
			SUBTOTAL			940
Solar Collector	Panel surface	150 ft²	5 $/ft²			750
	Other	FIXED			1000	1000
			SUBTOTAL			1750
Other Components	Hot water tank	80 gal.				150
	Control system					300
	Auxiliary pumps	hp				100
	Back-up heating system	kW				100
	Duct system					800
			SUBTOTAL			1450
Total Installed Cost						9970
Operating Costs Present Values		Fuel				8476
		Maintenance				2270
Present Value Life Cycle Cost	SALVAGE VALUE = $2254					18462

Fig. 9.7. Completed work form 7 for sample problem.

Salvage value

The residual worth of an ACES at the end of its assumed lifetime lies principally in the air duct system and the ice storage bin. Both of these components may be expected to deteriorate very little over the assumed 20-year life and both have alternative uses if the ACES were to be replaced by another system. The air ducts could continue to serve in another type of central heating and cooling system and the ice storage bin could be converted into useful basement area of the building. For the sample problem it is assumed that the discounted salvage value of the ACES is equal to 75% of the initial costs of these two components. In the case of the ice bin, only the basic construction costs are considered to be recoverable in this manner. The salvage value of the ACES for the sample problem is:

$$SV = (0.75)(895 + 390 + 605 + 315 + 800) \text{ dollars} ,$$

or

$$SV = \$2254 .$$

Maintenance costs

The present value of the annual maintenance costs, or the investment that would be required today for prepaying the ACES maintenance costs for a period of 20 years, is calculated according to the procedures described in Sect. 7.2 of the report. The assumed annual service and maintenance schedule for the sample problem is shown in Table 7.1. For the sample problem the present value of these maintenance costs, obtained from Table 7.2, is:

$$MC = \$2270 .$$

Power costs

The present value of the annual power costs of the ACES, or the payment made today that would cover all power costs of the ACES for a period of 20 years, is calculated according to the procedure described in Sect. 7.2.4. Assuming that the current cost of electrical power in Anderson, Indiana, is 5¢/kWh, the power bill for one year of ACES operation would amount to:

$$P_o = (0.05)(10{,}218) \text{ dollars} ,$$

or

$$P_o = \$510.90 .$$

From Table 7.3 the present worth factor corresponding to an annual power cost escalation rate of 8% and a personal discount rate of 10% is seen to be 16.59. For the sample problem the present value of the annual expenditures for power over a period of 20 years is:

$$PC = (16.59)(510.90) \text{ dollars} ,$$

or

$$PC = \$8475.83 .$$

9.4.2 Life-cycle cost

When the values calculated for IC, SV, MC, and PC are summed, as shown in Eq. (7.1), the life-cycle cost of the ACES in the sample problem is found to be $18,462. By investing this amount of money today the ACES purchaser could presumably enjoy 20 years of air-conditioned comfort and hot water in his home at no further cost. Although this information may be of interest to a prospective buyer, it has practical value only if he can compare this cost to the life-cycle cost of some other home heating and cooling system. Suppose, for example, that he could buy another HVAC

system at half of the initial cost of the ACES but that the system would consume twice as much electrical power. The life-cycle cost of the alternative system, assuming no maintenance costs and no salvage value, would amount to [(0.5)(9970) + (2)(8475.83)] dollars, or $21,937. Of these two systems, the ACES would clearly represent the better buy.

9.5 Summary of the ACES Design for the Sample Problem

The brine-chiller partial ACES of the sample problem, custom-designed according to the specifications of the builder, has the component sizes and engineering performance characteristics listed in Table 9.2.

Table 9.2. Sample problem ACES design parameters

Wetted volume of ice storage bin, ft^3	1,116
Area of solar collector panel, ft^2	150
Length of in-bin coil, ft	628
Usage of electricity, kWh/year	10,218
Efficiency (annual COP)	2.58

Ice storage bin

The ice storage bin has a thermal capacity of 8171 MBtu and interior dimensions of 8.0 ft x 16.0 ft x 10.5 ft. The design of the storage bin provides for a 10-in. access space above the water level and for 6 in. of space at the bottom for a concrete slab ballast weight to keep the ice logs submerged. The walls, floor, and lid of the bin are provided with a heat insulating value of R-40 and a nylon reinforced "Hypalon" liner is installed to make the bin waterproof. The bin is constructed of reinforced concrete poured into "Foam Form" blocks.

Solar collector panel

The solar panel is an unglazed, flat-plate collector of the type used for heating swimming pools. The panel is tilted toward the equator at

an angle of 60° from the horizontal plane and is mounted in such a manner that air can circulate on both of its surfaces. The brine that is pumped through the panel to remove collected heat consists of 35% by weight of methanol in water and has a freezing temperature of -21°F.

Ice-bin heat exchanger

The ice-bin heat exchanger is constructed of 628 ft of active, rigid heat-set, plastic tubing (0.85-in. ID, 1-in. OD) connected by risers in serpentine configuration with the active tubing positioned on a 16-in. square, horizontal lattice. The active tubing length is segmented into four equal-length flow circuits to prevent the brine pressure drop from exceeding 6 psi. The tubing in the ice bin is positioned by polypropylene ropes attached to the ballast weight and to the bin cover. The support ropes are spaced 70 in. apart. The average temperature of the brine leaving the heat pump evaporator is 15°F.

Power consumption

The ACES requires a 3.75 ton heat pump having a compressor draw of 4.55 kW. Other power consuming equipment of the system includes the indoor air fan, the cold brine pump, the hot brine pump, and the outdoor fan. The power draw values for these components are 0.79, 0.24, 0.33, and 0.58 kW, respectively. The annual power consumption of the ACES, when delivering the design annual loads of 45,089 MBtu for space heating, 16,990 MBtu for water heating, and 27,863 MBtu for space cooling, is estimated to be 10,218 kWh.

Annual efficiency

The modal COPs of the system are: 2.54 in the space-heating mode, 2.68 in the water-heating mode, 12.7 in the ice-melt space-cooling mode, and 1.66 in the supplemental space-cooling mode. The annual COP of the ACES, operating to deliver its design monthly thermal loads, is 2.58.

System costs

The initial, installed cost of the ACES is $9970, of which a discounted salvage value of $2254 is assumed to be recoverable at the end of the system lifetime. The discounted maintenance costs, over a 20-year period, are $2270 and the present value of the power costs over the same period of time is $8476. Based upon these values, the life-cycle cost of the ACES is $18,462.

APPENDIX A

A. BUILDING THERMAL LOADS DETERMINATION

Monthly thermal demands for space heating, water heating, and space cooling have been computed for four reference single-family houses in each of 111 cities distributed throughout 16 geographical zones of the United States (Fig. A.1). The houses of each zone vary in design and level of thermal insulation according to construction practices typical for the region.[1] Weather data specific for each of the 111 cities are used to compute the thermal loads of the houses. These calculated thermal loads then form the basis of the full-, partial-, and minimum-ACES designs for both ice-maker and brine-chiller systems. The reference houses of each geographical zone and the methods used to calculate thermal loads for each are described below.

A.1 Description of the Reference Houses

The four reference houses for each city are single-family residences of frame construction having 1200 ft^2 or 2400 ft^2 of living space with two different levels of thermal insulation in the building envelope. The reference houses are assumed to be oriented along the primary compass directions and to have equal window areas on each of their four sides. Assumed construction and use characteristics affecting the thermal loads of all the reference houses are listed in Table A.1. Depending upon the geographical zone of its location, the reference house may have one or two stories and either a basement, crawl space, or concrete slab foundation. Table A.2 lists design features of the reference houses for each zone.

A.2 Climate Data Sources

The monthly space-heating and air-conditioning loads of the reference houses are computed based on the assumption that the houses are free-standing — in an area unsheltered from the prevailing winds and sun by variations in terrain, the proximity of trees, or by adjacent buildings. The climatological data used in computing thermal loads are long-term averages that represent weather observations of five to ten years. The

ORNL-DWG 79-16656

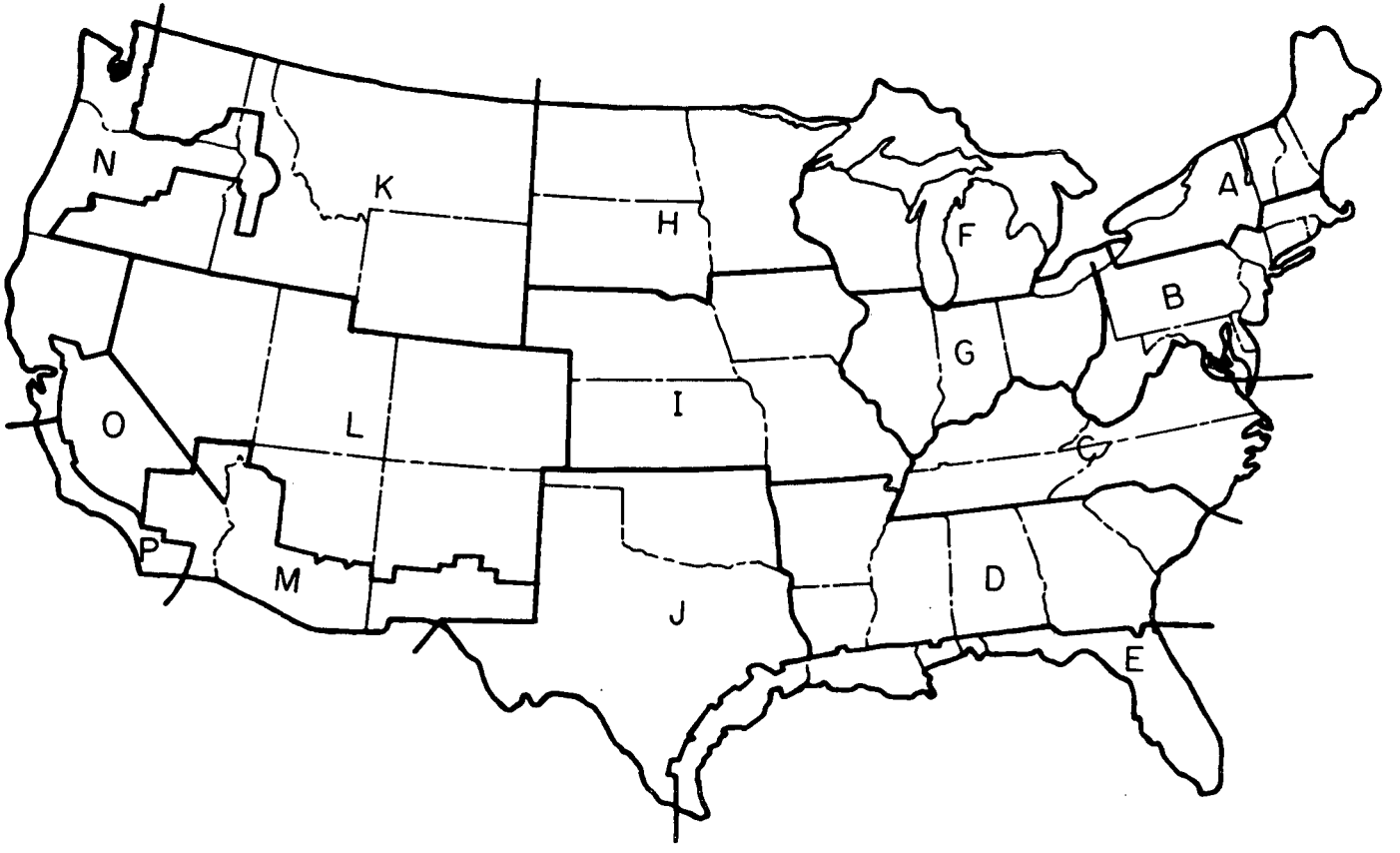

Fig. A.1. Boundaries of defined geographical zones.

Table A.1. Characteristics of the reference houses

Year-round	
Window shading factor	0.42
Absorption coefficient, outside walls	0.78
Absorption coefficient, roof	0.87
Internal heat sources (lights, appliances, etc.), Btu/h	4300
Air infiltration normalization,[a] air changes per hour	1
Number of equivalent adult occupants	3
Winter	
Indoor air temperature, °F	70
Occupant sensible heat emission, Btu per hour per person	300
Indoor relative humidity control	None
Summer	
Indoor air temperature, °F	78
Occupant sensible heat emission, Btu per hour per person	220
Occupant latent heat emission, Btu per hour per person	200
Extraneous moisture sources, pounds of water per day	5
Maximum indoor relative humidity, %	52

[a]Air infiltration normalized to 1 air change per hour at conditions of 15 mph wind speed and 70°F temperature difference across the building thermal envelope.

Table A.2. Description of reference houses in 16 zones[a]

	Number of stories	Foundation	Main floor area (ft^2)	Ground floor nominal R-value	Ceiling (to attic) area (ft^2)	Ceiling (to attic) nominal R-value	Wall area (ft^2)	Wall nominal R-value	Window area (ft^2)	Window type	Storm doors	Garage
					Zone A							
House 1	Cape Cod	Full basement	832	0	832	R-19	1480	R-11	144	1-glaze	No	Attached
House 2	2	Full basement	1200	0	1200	R-19	1952	R-11	288	1-glaze	No	Attached
House 3	Cape Cod	Full basement	832	R-11	832	R-38	1480	R-13	144	2-glaze	Yes	Attached
House 4	2	Full basement	1200	R-11	1200	R-38	1952	R-13	288	2-glaze	Yes	Attached
					Zone B							
House 1	Ranch	Full basement	1200	0	1200	R-19	976	R-11	144	1-glaze	No	Attached
House 2	Ranch	Full basement	2400	0	2400	R-19	1472	R-11	288	1-glaze	No	Attached
House 3	Ranch	Full basement	1200	R-11	1200	R-38	976	R-13	144	2-glaze	Yes	Attached
House 4	Ranch	Full basement	2400	R-11	2400	R-38	1472	R-13	288	2-glaze	Yes	Attached
					Zone C							
House 1	Ranch	Crawl space	1200	0	1200	R-19	976	R-11	144	1-glaze	No	None
House 2	Ranch	Full basement	2400	0	2400	R-19	1472	R-11	288	1-glaze	No	Carport
House 3	Ranch	Crawl space	1200	R-11	1200	R-38	976	R-13	144	2-glaze	Yes	None
House 4	Ranch	Full basement	2400	R-11	2400	R-38	1472	R-13	288	2-glaze	Yes	Carport
					Zone D							
House 1	Ranch	Slab	1200	0	1200	R-19	976	R-11	144	1-glaze	No	None
House 2	Ranch	Crawl space	2400	0	2400	R-19	1472	R-11	288	1-glaze	No	Carport
House 3	Ranch	Slab	1200	R-7	1200	R-38	976	R-13	144	2-glaze	Yes	None
House 4	Ranch	Crawl space	2400	R-11	2400	R-38	1472	R-13	288	2-glaze	Yes	Carport

Table A.2. (continued)[a]

	Number of stories	Foundation	Main floor area (ft^2)	Ground floor nominal R-value	Ceiling (to attic) area (ft^2)	Ceiling (to attic) nominal R-value	Wall area (ft^2)	Wall nominal R-value	Window area (ft^2)	Window type	Storm doors	Garage
					Zone E							
House 1	1	Slab	1200	0	1200	R-19	976	R-11	144	1-glaze	No	Carport
House 2	1	Slab	2400	0	2400	R-19	1472	R-11	288	1-glaze	No	Carport
House 3	1	Slab	1200	R-7	1200	R-38	976	R-13	144	2-glaze	No	Carport
House 4	1	Slab	2400	R-7	2400	R-38	1472	R-13	288	2-glaze	No	Carport
					Zone F							
House 1	1	Part basement	1200	0	1200	R-19	976	R-11	144	1-glaze	No	Attached
House 2	1	Full basement	2400	0	2400	R-19	1472	R-11	288	1-glaze	No	Attached
House 3	1	Part basement	1200	R-11	1200	R-38	976	R-13	144	2-glaze	Yes	Attached
House 4	1	Full basement	2400	R-11	2400	R-38	1472	R-13	288	2-glaze	Yes	Attached
					Zone G							
House 1	Bi-level	Part basement	832	0	832	R-19	1480	R-11	144	1-glaze	No	Integral
House 2	Ranch	Full basement	2400	0	2400	R-19	1472	R-11	288	1-glaze	No	Attached
House 3	Bi-level	Part basement	832	R-11	832	R-38	1480	R-13	144	2-glaze	Yes	Integral
House 4	Ranch	Full basement	2400	R-11	2400	R-38	1472	R-13	288	2-glaze	Yes	Attached
					Zone H							
House 1	1	Full basement	1200	0	1200	R-19	976	R-11	144	1-glaze	No	Attached
House 2	1	Full basement	2400	0	2400	R-19	1472	R-11	288	1-glaze	No	Attached
House 3	1	Full basement	1200	R-11	1200	R-38	976	R-13	144	2-glaze	Yes	Attached
House 4	1	Full basement	2400	R-11	2400	R-38	1472	R-13	288	2-glaze	Yes	Attached

Table A.2. (continued)[a]

	Number of stories	Foundation	Main floor area (ft^2)	Ground floor nominal R-value	Ceiling (to attic) area (ft^2)	Ceiling (to attic) nominal R-value	Wall area (ft^2)	Wall nominal R-value	Window area (ft^2)	Window type	Storm doors	Garage
					Zone I							
House 1	Ranch	Part basement	1200	R-11	1200	R-19	976	R-11	144	1-glaze	No	Attached
House 2	Ranch	Full basement	2400	R-11	2400	R-19	1472	R-11	288	1-glaze	No	Attached
House 3	Ranch	Part basement	1200	R-19	1200	R-38	976	R-13	144	2-glaze	Yes	Attached
House 4	Ranch	Full basement	2400	R-19	2400	R-38	1472	R-13	288	2-glaze	Yes	Attached
					Zone J							
House 1	Ranch	Slab	1200	0	1200	R-19	976	R-11	144	1-glaze	No	Carport
House 2	Ranch	Slab	2400	0	2400	R-19	1472	R-11	288	1-glaze	No	Carport
House 3	Ranch	Slab	1200	R-7	1200	R-38	976	R-13	144	2-glaze	No	Carport
House 4	Ranch	Slab	2400	R-7	2400	R-38	1472	R-13	288	2-glaze	No	Carport
					Zone K							
House 1	1	Crawl space	1200	0	1200	R-19	976	R-11	144	1-glaze	No	Attached
House 2	1	Full basement	2400	0	2400	R-19	1472	R-11	288	1-glaze	No	Attached
House 3	1	Crawl space	1200	R-19	1200	R-38	976	R-13	144	2-glaze	Yes	Attached
House 4	1	Full basement	2400	R-11	2400	R-38	1472	R-13	288	2-glaze	Yes	Attached
					Zone L							
House 1	1	Part basement	1200	0	1200	R-19	976	R-11	144	1-glaze	No	Carport
House 2	1	Full basement	2400	0	2400	R-19	1472	R-11	288	1-glaze	No	Attached
House 3	1	Part basement	1200	R-11	1200	R-38	976	R-13	144	2-glaze	Yes	Carport
House 4	1	Full basement	2400	R-11	2400	R-38	1472	R-13	288	2-glaze	Yes	Attached

Table A.2. (continued)[a]

	Number of stories	Foundation	Main floor area (ft^2)	Ground floor nominal R-value	Ceiling (to attic) area (ft^2)	Ceiling (to attic) nominal R-value	Wall area (ft^2)	Wall nominal R-value	Window area (ft^2)	Window type	Storm doors	Garage
					Zone M							
House 1	1	Slab	1200	0	1200	R-19	976	R-11	144	1-glaze	No	Carport
House 2	1	Slab	2400	0	2400	R-19	1472	R-11	288	1-glaze	No	Carport
House 3	1	Slab	1200	0	1200	R-38	976	R-13	144	2-glaze	No	Carport
House 4	1	Slab	2400	0	2400	R-38	1472	R-13	288	2-glaze	No	Carport
					Zone N							
House 1	1	Crawl space	1200	0	1200	R-19	976	R-11	144	1-glaze	No	Carport
House 2	1	Crawl space	2400	0	2400	R-19	1472	R-11	288	1-glaze	No	Attached
House 3	1	Crawl space	1200	R-11	1200	R-38	976	R-13	144	1-glaze	No	Carport
House 4	1	Crawl space	2400	R-11	2400	R-38	1472	R-13	288	2-glaze	No	Attached
					Zone O							
House 1	1	Slab	1200	0	1200	R-19	976	R-11	144	1-glaze	No	Attached
House 2	1	Crawl space	2400	0	2400	R-19	1472	R-11	288	1-glaze	No	Attached
House 3	1	Slab	1200	0	1200	R-38	976	R-13	144	2-glaze	Yes	Attached
House 4	1	Crawl space	2400	R-11	2400	R-38	1472	R-13	288	2-glaze	Yes	Attached
					Zone P							
House 1	1	Slab	1200	0	1200	R-19	976	R-11	144	1-glaze	No	Carport
House 2	1	Slab	2400	0	2400	R-19	1472	R-11	288	1-glaze	No	Carport
House 3	1	Slab	1200	0	1200	R-38	976	R-13	144	2-glaze	No	Carport
House 4	1	Slab	2400	0	2400	R-38	1472	R-13	288	2-glaze	No	Carport

[a]Assumed for all reference houses: House 1 – total floor area, 1200 ft^2; medium insulation level. House 2 – total floor area, 2400 ft^2; medium insulation level. House 3 – total floor area, 1200 ft^2; high insulation level. House 4 – total floor area, 2400 ft^2; high insulation level.

design-year weather data for each city, which describe the monthly environmental conditions existing outside the thermal envelope of the reference houses, consist of:

1. Average monthly wind speed.[2] Wind direction is not taken into account in computing the thermal loads of the reference houses.
2. Monthly average daily total solar radiation falling on a horizontal surface.[2] (These values are used to compute the average daily insolation on vertical surfaces.)[3]
3. Monthly mean frequency of outdoor dry bulb temperatures.[4] Mean coincident wet bulb temperatures are available for each dry bulb temperature range.[4]
4. Monthly average ground temperatures at various depths are calculated according to the method described in Sect. 3.3. An average soil diffusivity of 0.025 ft^2/h is assumed for all locations. Local variations in soil properties and moisture content are not taken into account.

A.3 Methods of Loads Calculations

A.3.1 Monthly space-heating loads

The heating and cooling loads of the reference houses, listed in Table B.2, were computed using temperature-bin weather data. These data consist of tabulations of outdoor air temperatures and time durations for each month of the year. The tables are compiled by defining consecutive 5°F-wide temperature bins and finding the total elapsed time in each month for which the outdoor air temperature falls within each bin range. The time durations of temperatures may be further broken down into daytime and nighttime hours.[4] The temperature-bin data preserve the integral of temperature vs time needed for calculating steady-state heat losses from the building but lose information on temperature sequences that is required for calculating transient heat flow. As a result, the temperature-bin method cannot correctly treat the effects of thermal inertia in a building and is limited to use with light residential structures.

Application of the bin method requires detailed information concerning the construction, orientation, location, and intended use schedule of the

building. The orientation, window areas, and location of the building are required for estimating the solar gains of the building. Solar gains through glazed areas are computed by using solar radiation intensities obtained by the method of T. Kusuda.[3] These intensities have been tabulated for various locations in the United States.[2] Solar gains resulting from radiation impinging upon opaque areas of the building (roof and walls) are computed by a method that is equivalent to the sol-air temperature technique.[5] The heat emitted by internal sources (sensible and latent heat deliveries to the building resulting from the operation of lights and appliances and the presence of people) is estimated from intended use and occupancy schedules.

The effect that the construction and design of a building has on air infiltration and heat conduction determines its overall "heat loss coefficient." The heat loss coefficient of a building, UA_T, is the rate of heat loss per degree of temperature difference existing between the interior and exterior of the house. The coefficient, in Btu/h/°F, is expressed by:

$$UA_T = C_{INF} + \sum_k U_k \cdot A_k \ , \qquad (A.1)$$

where

C_{INF} = the monthly average air infiltration coefficient, Btu/h/°F;

U_k = the heat transmission coefficient of surface element k, Btuh/ft^2/°F;

A_k = the area of surface element k, ft^2.

The summation in Eq. (A.1) is taken over all surface elements of the building envelope that are exposed to outside ambient-air temperatures.

The heat loss coefficient of the building can be used to compute the outdoor balance temperature, T_{BAL}, the temperature at which the heat losses of the house are balanced by heat inputs from internal and solar sources. This heat flow balance condition, in Btu, is expressed by:

$$UA_T(T_{SET} - T_{BAL}) = (R_{INT} + R_{SUN}) \ , \qquad (A.2)$$

where

T_{SET} = the interior room temperature, °F;

R_{INT} = the rate of heat input by internal sources, Btu/h;

R_{SUN} = the solar heat gain through both glazed and opaque surfaces, Btu/h.

Solving Eq. (A.2) for T_{BAL} gives:

$$T_{BAL} = T_{SET} - (R_{INT} + R_{SUN})/UA_T \ . \tag{A.3}$$

The physical significance of T_{BAL} is that the heating plant must deliver heat to the house only when the outdoor air temperature falls below this value.

The monthly quantity of heat that must be delivered to the building by the heating plant to maintain the desired room temperature can be obtained by equating the monthly heat losses of the building to the monthly heat gains. For any given month m, this condition is expressed by:

$$q_H(m) + (R_{INT} + R_{SUN}) \cdot \sum_{i=1}^{I} h(i,m) = \sum_{i=1}^{I} UA_T[T_{SET} - T(i)]h(i,m) \ , \tag{A.4}$$

where

$q_H(m)$ = the total space heating load during month m;

m = the month index number (1 to 12);

i = the temperature bin index number;

T(i) = the mid-temperature of bin i, °F;

h(i,m) = the temperature time duration in bin i, for month m, hours;

I = the bin index number for which $T(i) = T_{BAL}$.

The bin temperature, T(I), increases with ascending values of the bin index number, i.

The monthly space heating load, in Btu, is obtained by solving Eq. (A.4) for $q_H(m)$ and inserting the definition of T_{BAL}, which is given in Eq. (A.3), into the resulting expression. The result obtained is:

$$q_H(m) = UA_T \cdot \sum_{i=1}^{I} [T_{BAL} - T(i)] \cdot h(i,m) \ . \qquad (A.5)$$

This monthly space-heating load is identical in form to the conventional heating degree-day method. In the bin method, however, T_{BAL} is calculated explicitly; in the heating degree-day method T_{BAL} is assumed to be 65°F for all buildings and climates. The explicit calculation of T_{BAL} makes it possible to account for differences in life-style (thermostat setting, lights and appliance usage, and occupancy schedules) and to account for differences in the building construction (location, orientation, window areas, thermal insulation level, and air infiltration control). Furthermore, T_{BAL} is not assumed to be constant, but is calculated each month separately for daytime and nighttime conditions. Thus, the temperature-bin method of calculating thermal loads affords flexibility in modeling specific building designs and uses.

A.3.2 Monthly space-cooling loads

The calculation of monthly space-cooling loads by the temperature-bin method requires separate estimations of the sensible and latent heat gains of the building. The sensible heat gains are from solar radiation, internal heat sources, infiltration of outdoor air, and heat conduction through the thermal envelope of the building. The balance temperature of the house for cooling, T_{BAL}, is obtained from Eq. (A.3), where T_{SET} is the desired summer indoor air temperature. The cooling plant is activated to remove sensible heat from the building only when the outdoor air temperature rises above T_{BAL}. The monthly sensible cooling load is obtained from the expression,

$$q_C(m) = UA_T \sum_{i=I}^{IMAX} (T(i) - T_{BAL}) \cdot h(i,m) \ , \qquad (A.6)$$

where IMAX is the bin index number of the largest T(i) that exceeds T_{BAL}, and the other variables are as defined previously.

The monthly latent cooling load arises from the desirability of maintaining the relative humidity of the indoor air at a comfortable level. During the summer the moisture content of the indoor air tends to rise because of moisture introduced by air infiltration, the presence of people, and activities such as cooking and washing. The latent cooling load caused by air infiltration is based on an estimated air exchange rate and is calculated from mean coincident wet bulb temperatures that are listed in the temperature-bin data. The latent heat emission of the occupants of the building is about 200 Btu/h per person, and the moisture added to the indoor air by cooking, dish washing, laundering, and bathing is estimated to range from 5 to 10 lb of water per day. The total monthly space-cooling load is obtained by summing the sensible and latent cooling loads.

A.3.3 Monthly water-heating loads

Monthly water-heating loads corresponding to a consumption rate of 70 gal/d of hot water have been computed using the method described in Sect. 3.2.3. The cold water inlet temperature for each of the reference cities is assumed to be equal to the average monthly ground temperature at a depth just below the frost line. The method of estimating ground temperatures, described in Sect. 3.3, requires knowledge of the annual average air temperature, amplitude of the annual cycle of monthly average outdoor air temperatures, and the phase angle of the earth temperature cycle. These parameters, denoted by A_0, B_0, and P_0, respectively, are listed in Table B.2 for each of the 111 reference cities. The estimated monthly water-heating loads of the four reference houses are listed in Table B.2.

A.3.4 Computer program

The procedures described here for estimating the monthly thermal loads of a building have been incorporated into a computer program, MAD. From weather and house-design data, the program computes the monthly thermal

loads of the building. From these, the optimized ACES design is then computed. Computer-produced ACES design and performance data are listed in Table B.2. A report in which the program is listed and its functions are described in detail is currently in preparation at the Oak Ridge National Laboratory.[6]

REFERENCES

1. NAHB Research Foundation, Inc., *Research Program on the Economic Feasibility and Commercialization Potential of ACES,* ORO/2130/1 (February 1979).

2. U.S. Department of Commerce, Environmental Services Administration and Environmental Data Service, *Climatic Atlas of the United States* June 1968, reprinted by the National Oceanic and Atmospheric Administration, 1974.

3. T. Kusuda, *Hourly Solar Radiation Data for Vertical and Horizontal Surfaces on Average Days in the United States and Canada,* NBS Building Science Series 96 (April 1977).

4. Department of the Air Force, *Engineering Weather Data,* AFM 88-29 (July 1978).

5. American Society of Heating, Refrigeration and Air-Conditioning Engineers, Inc., *ASHRAE Handbook and Product Directory: 1977 Fundamentals,* ASHRAE, New York, 1978.

6. M. L. Ballou *et al.*, MAD: A Computer Program for ACES Design Using Monthly Thermal Loads, Oak Ridge National Laboratory, Oak Ridge, Tenn. (in preparation).

Appendix B

COMPUTER ACES DESIGNS

B. COMPUTER ACES DESIGNS

Computer printouts of 24 different ACES designs for each of 111 cities in the United States are presented here. Full-, partial-, and minimum-ACES designs are tabulated for each of four reference houses in each city. Component sizes and system performances (COPs) are listed for both ice-maker and brine-chiller ACES. The assumptions underlying the ACES design and performance estimates are described below.

B.1 ACES Component Characteristics

The ACES designs tabulated in this appendix are based upon the assumptions listed in Table B.1.

B.2 Description of the ACES Design Tables

The ACES designs for the four reference houses in each of 111 cities in the United States are listed in this section alphabetically by state. The ACES designs listed are "best case" designs, that is, sizes of components associated with the ice storage bin – the solar collector panel, the ice-bin heat exchanger, and the heat pump – are the smallest that will yield the design loads of the reference houses. For each reference city, climatic data, design thermal loads for the reference houses, and optimized ACES design and performance data are listed. Data listed in the computer printouts for each reference city and the nomenclature used include:

- geographical zone in which the city is located;
- average January wind speed in mph;
- ratio of the total to sensible cooling load for the four reference houses;
- latitude, longitude, and elevation of the reference city;
- ground temperature constants A_0, B_0, and P_0 for use in Eq. (3.2), where A_0 and B_0 have units of °F, and P_0 is in radians; and
- winter and summer design-day temperatures in °F for the reference city and the assumed indoor air temperatures of the house.

Table B.1. Assumptions about ACES components

System performance[a]	
Heating season $COP_I(H)$	2.55
Stored-ice cooling $COP_I(C)$	12.71
Chilled-water cooling COP(BD)	8.90
Heat collection COP	Calculated
Summer water heating $COP_S(H)$	2.68
Bin heat removal COP(BR)	2.01
Supplemental cooling $COP_S(C)$	Calculated
Cycling losses	0
Duct losses	0
Ice storage bin	
Height of wetted volume, ft	8
Cross section	Square
Depth below ground surface, ft	1
Thermal insulation (top, bottom, and sides — R-value)	40
Solar/Convector panel	
Finned aluminum tubing or plastic corrugated sheet	Unglazed
Number of convective surfaces	1
Mounting, optimum tilt angle for winter solar heat collection	
Hot water tank	
Tank wall area, ft^2	30
Insulation R-value	12
Hot water storage temperature, °F	120
Hot water usage rate, gpd	70
Tank volume, gal	80

[a]Mechanical package is vented to the outdoors during summer operation.

The computer printouts also list the estimated design hourly heating and cooling loads for the four reference houses and the estimated monthly demands for space heating, water heating, and space cooling, where

QHW(M) = design monthly water-heating load, in MBtu/month;
QH(M) = design monthly space-heating load, in MBtu/month;
QC(M) = design monthly latent and sensible cooling load, in MBtu/month.

The design monthly water-heating loads are assumed to be the same for each of the four reference houses of a given city. The computer printouts list the total annual thermal demands of each reference house for space heating, water heating, and space cooling.

The computer printouts include a listing for each city of the estimated average monthly heat leakage from the earth into an underground, 32°F storage bin that is insulated on all surfaces to a thermal resistance of R-40. Also listed are the estimated average monthly heat-collection capacities of a flat plate, unglazed solar-collector panel that faces south and is at an angle from the horizontal plane equal to the latitude of the city plus 20°. In the computer printouts

TB(M) = average monthly ground heat leakage into the storage bin through the combined top and bottom areas of the tank, in MBtu/ft^2/month;
SD(M) = average monthly ground heat leakage into the storage bin through the combined areas of the four sides of the tank, in MBtu/ft^2/month;
PAN(M) = average monthly ambient heatcollection capacity of an unglazed solar collector panel that is optimally mounted for winter heat collection, in MBtu/ft^2/month.

Also listed are the following design parameters of optimized brine-chiller and ice-maker ACES for each city:

- volume of the ice storage bin, ft^3;
- area of the solar collector panel, ft^2;
- length of the ice-bin heat exchanger coil, ft;
- annual electricity use, kWh; and
- efficiency, or annual COP.

These design parameters are listed for the three different sizes of the ice storage bin (i.e., for a full, partial, and minimum ACES) for each of the four reference houses in each city. The sizes of the full- and minimum-ACES bins were calculated according to procedures described in this report. The size of the partial-ACES bin was selected arbitrarily at midway between the sizes of full- and minimum-ACES bins.

B.3 ACES Design and Performance Tables

B.3.1 Reference ACES cities

State	City	Page
Alabama	Birmingham Montgomery	B-10
Arizona	Phoenix Tucson	B-12
Arkansas	Little Rock	B-14
California	Los Angeles Merced San Diego	B-15
Colorado	Colorado Springs Denver Grand Junction	B-18
District of Columbia	Washington	B-21
Florida	Apalachicola Jacksonville	B-22
Georgia	Atlanta Augusta Macon	B-24
Idaho	Boise Idaho Falls	B-27
Illinois	Chicago East St. Louis Urbana	B-29

Indiana	Fort Wayne Indianapolis South Bend	B-32
Iowa	Des Moines Sioux City	B-35
Kansas	Dodge City Topeka	B-37
Kentucky	Louisville	B-39
Louisiana	Lake Charles New Orleans Shreveport	B-40
Maine	Portland	B-43
Massachusetts	Falmouth	B-44
Michigan	Battle Creek Detroit Sault Ste. Marie	B-45
Minnesota	Duluth International Falls Minneapolis	B-48
Mississippi	Biloxi Columbus Jackson	B-51
Missouri	Columbia Kansas City Springfield	B-54
Montana	Billings Great Falls Missoula	B-57
Nebraska	Grand Island Lincoln North Platte	B-60
Nevada	Ely Las Vegas Winnemucca	B-63
New Jersey	Trenton	B-66
New Mexico	Albuquerque Roswell	B-67
New York	Albany Binghamton Niagara Falls Syracuse	B-69

North Carolina	New Bern Greensboro	B-73
North Dakota	Bismarck Grand Forks Williston	B-75
Ohio	Akron Columbus Dayton Toledo	B-78
Oklahoma	Altus Oklahoma City Tulsa	B-82
Oregon	Astoria Medford Portland	B-85
Pennsylvania	Middletown Philadelphia Pittsburgh Wilkes-Barre	B-88
South Carolina	Charleston Greenville Sumter	B-92
South Dakota	Huron Rapid City	B-95
Tennessee	Bristol Knoxville Memphis Nashville	B-97
Texas	El Paso Ft. Worth Houston San Antonio	B-101
Utah	Salt Lake City	B-105
Vermont	Burlington	B-106
Virginia	Norfolk Richmond Roanoke	B-107
Washington	Moses Lake Seattle Spokane	B-110
West Virginia	Charleston Elkins	B-113
Wisconsin	Green Bay Madison	B-115

Wyoming	Casper Cheyenne Lander Sheridan	B-117

B.3.2 Computer printouts

Table B.2 lists computer solutions of ACES designs and performances for 111 U.S. cities.

Table B.2. Computer solutions for ACES design and performance in 111 U.S. cities

BIRMINGHAM, ALABAMA

GEOGRAPHICAL ZONE = D	LATITUDE (DEG) = 33.6	GROUND	AO = 62.55 F	AIR TEMP:	OUTDOOR	INDOOR
JANUARY WIND (MPH) = 9.0	LONGITUDE (DEG) = 86.8	TEMPERATURE	BO = 18.77 F	WINTER	17 F	70 F
COOLING(TOTAL/SENS.) = 1.17	ELEVATION (FT) = 620.	CONSTANTS:	PO = 0.537 RAD	SUMMER	94 F	78 F

BUILDING DESIGN MONTHLY THERMAL LOADS

MONTH	R-40 INSULATION BIN HEAT LEAK COEFFICIENTS (32F)		UNGLAZED PANEL HEAT	DOMESTIC WATER HEAT	MEDIUM INSULATION HOUSE 1 1200 FT2		MEDIUM INSULATION HOUSE 2 2400 FT2		HIGH INSULATION HOUSE 3 1200 FT2		HIGH INSULATION HOUSE 4 2400 FT2	
(M)	TB(M)	SD(M)	PAN(M)	QHW(M)	QH(M)	QC(M)	QH(M)	QC(M)	QH(M)	QC(M)	QH(M)	QC(M)
	MBTU/FT2		MBTU/FT2	MBTU	MBTU	MBTU	MBTU	MBTU	MBTU	MBTU	MBTU	MBTU
JAN	0.773	0.410	52.99	1410	5720	0	13720	0	2490	0	6810	0
FEB	0.676	0.341	67.39	1260	4030	0	9940	0	1560	370	4590	0
MAR	0.823	0.392	90.36	1320	3280	0	8440	0	1140	810	3720	1120
APR	0.947	0.439	111.83	1150	1310	1500	4070	2080	0	2180	1430	3020
MAY	1.182	0.547	128.14	1040	0	3110	1280	4450	0	4130	0	5450
JUN	1.324	0.623	128.16	890	0	4530	0	6380	0	5550	0	7550
JUL	1.495	0.723	127.16	850	0	6260	0	8610	0	6620	0	9310
AUG	1.524	0.759	129.81	860	0	6380	0	8830	0	6540	0	9190
SEP	1.401	0.720	123.23	910	0	4380	0	6020	0	4810	0	6410
OCT	1.285	0.680	100.90	1070	650	1990	2360	2760	0	2410	1150	3230
NOV	1.053	0.569	76.07	1180	2420	0	6450	0	1050	730	3420	970
DEC	0.898	0.488	59.10	1340	4310	0	10720	0	1870	0	5410	0
ANNUAL THERMAL LOADS (MBTU)				13280	21720	28150	56980	39130	8110	34150	26530	46250
DESIGN HOURLY THERMAL LOADS (BTU/HR)					29020	21132	56198	34203	18688	19612	35764	33214

CALCULATED ACES DESIGNS

ACES SIZE	SYSTEM DESIGN PARAMETERS		HOUSE 1 ICE MAKER	HOUSE 1 BRINE CHILLER	HOUSE 2 ICE MAKER	HOUSE 2 BRINE CHILLER	HOUSE 3 ICE MAKER	HOUSE 3 BRINE CHILLER	HOUSE 4 ICE MAKER	HOUSE 4 BRINE CHILLER
FULL	VOLUME OF ICE BIN, FT3	V	3228	1912	7043	4226	1335	792	3314	1950
	AREA OF PANEL, FT2	A	0	0	0	0	0	0	0	0
	LENGTH OF ICE BIN COIL, FT	L	0	459	0	903	0	280	0	554
	USAGE OF ELECTRICITY, KWH/YR	U	7146	6922	10948	10644	7266	7272	10403	10435
	EFFICIENCY (ANNUAL COP)	E	2.59	2.67	2.93	3.01	2.24	2.24	2.42	2.42
PARTIAL	VOLUME OF ICE BIN, FT3	V	1944	1121	4222	2463	848	486	2037	1165
	AREA OF PANEL, FT2	A	19	19	42	41	0	0	21	21
	LENGTH OF ICE BIN COIL, FT	L	0	431	0	848	0	264	0	520
	USAGE OF ELECTRICITY, KWH/YR	U	7916	7942	13046	12754	7772	7777	11412	11427
	EFFICIENCY (ANNUAL COP)	E	2.34	2.33	2.46	2.51	2.09	2.09	2.21	2.21
MINIMUM	VOLUME OF ICE BIN, FT3	V	660	330	1401	700	361	180	761	380
	AREA OF PANEL, FT2	A	45	48	98	105	24	27	53	57
	LENGTH OF ICE BIN COIL, FT	L	0	370	0	725	0	233	0	452
	USAGE OF ELECTRICITY, KWH/YR	U	8572	8567	14238	14234	7927	7986	12138	12125
	EFFICIENCY (ANNUAL COP)	E	2.16	2.16	2.25	2.25	2.05	2.04	2.08	2.08

MONTGOMERY, ALABAMA

GEOGRAPHICAL ZONE	= D	LATITUDE (DEG)	= 32.4	GROUND	AO = 64.98 F	AIR TEMP:	OUTDOOR	INDOOR
JANUARY WIND (MPH)	= 8.0	LONGITUDE (DEG)	= 86.4	TEMPERATURE	BO = 17.88 F	WINTER	21 F	70 F
COOLING(TOTAL/SENS.)	= 1.19	ELEVATION (FT)	= 169.	CONSTANTS:	PO = 0.538 RAD	SUMMER	96 F	78 F

BUILDING DESIGN MONTHLY THERMAL LOADS

MONTH	R-40 INSULATION BIN HEAT LEAK COEFFICIENTS(32F)		UNGLAZED PANEL HEAT	DOMESTIC WATER HEAT	MEDIUM INSULATION HOUSE 1 1200 FT2		MEDIUM INSULATION HOUSE 2 2400 FT2		HIGH INSULATION HOUSE 3 1200 FT2		HIGH INSULATION HOUSE 4 2400 FT2	
(M)	TB(M) MBTU/FT2	SD(M) MBTU/FT2	PAN(M) MBTU/FT2	QHW(M) MBTU	QH(M) MBTU	QC(M) MBTU	QH(M) MBTU	QC(M) MBTU	QH(M) MBTU	QC(M) MBTU	QH(M) MBTU	QC(M) MBTU
JAN	0.881	0.463	59.14	1350	4430	0	10990	0	1880	0	5420	0
FEB	0.774	0.390	66.62	1210	3100	0	8000	0	1160	550	3620	0
MAR	0.928	0.446	93.40	1270	2410	620	6600	0	740	1000	2800	1380
APR	1.042	0.488	108.55	1110	710	2050	2660	2890	0	2830	780	3740
MAY	1.270	0.593	119.84	1000	0	3790	0	5470	0	4850	0	6430
JUN	1.400	0.664	122.88	860	0	5630	0	7370	0	6210	0	8660
JUL	1.569	0.761	130.19	820	0	7080	0	9950	0	7140	0	10310
AUG	1.596	0.795	123.18	830	0	7340	0	10530	0	7150	0	10350
SEP	1.475	0.755	119.61	870	0	5240	0	7220	0	5480	0	7470
OCT	1.369	0.720	101.85	1030	0	2550	1330	3570	0	2970	0	3970
NOV	1.143	0.612	81.47	1130	1550	840	4540	1110	600	1150	2350	1530
DEC	1.000	0.537	58.72	1290	3350	0	8700	0	1410	330	4370	0
ANNUAL THERMAL LOADS (MBTU)				12770	15550	35140	42820	48110	5790	39660	19340	53840
DESIGN HOURLY THERMAL LOADS (BTU/HR)					25932	23503	50161	39801	16894	21066	32297	36322

CALCULATED ACES DESIGNS

ACES SIZE	SYSTEM DESIGN PARAMETERS		HOUSE 1 ICE MAKER	HOUSE 1 BRINE CHILLER	HOUSE 2 ICE MAKER	HOUSE 2 BRINE CHILLER	HOUSE 3 ICE MAKER	HOUSE 3 BRINE CHILLER	HOUSE 4 ICE MAKER	HOUSE 4 BRINE CHILLER
	VOLUME OF ICE BIN, FT3	V	2189	1302	5275	3135	846	491	2410	1407
	AREA OF PANEL, FT2	A	0	0	0	0	0	0	0	0
FULL	LENGTH OF ICE BIN COIL, FT	L	0	397	0	789	0	242	0	487
	USAGE OF ELECTRICITY, KWH/YR	U	8046	7834	11767	11397	8180	8183	11526	11543
	EFFICIENCY (ANNUAL COP)	E	2.31	2.37	2.58	2.67	2.09	2.08	2.18	2.18
	VOLUME OF ICE BIN, FT3	V	1362	785	3209	1853	572	320	1519	860
	AREA OF PANEL, FT2	A	14	14	32	33	0	0	19	19
PARTIAL	LENGTH OF ICE BIN COIL, FT	L	0	374	0	741	0	230	0	458
	USAGE OF ELECTRICITY, KWH/YR	U	8611	8603	13417	13437	8437	8437	12368	12385
	EFFICIENCY (ANNUAL COP)	E	2.16	2.16	2.26	2.26	2.02	2.02	2.04	2.03
	VOLUME OF ICE BIN, FT3	V	535	267	1143	571	299	149	627	313
	AREA OF PANEL, FT2	A	35	37	77	81	16	17	41	45
MINIMUM	LENGTH OF ICE BIN COIL, FT	L	0	326	0	640	0	208	0	404
	USAGE OF ELECTRICITY, KWH/YR	U	9057	9052	14284	14273	8599	8600	12696	12799
	EFFICIENCY (ANNUAL COP)	E	2.05	2.05	2.13	2.13	1.98	1.98	1.98	1.97

PHOENIX, ARIZONA

GEOGRAPHICAL ZONE = M	LATITUDE (DEG) = 33.5	GROUND	AO = 70.93 F	AIR TEMP:	OUTDOOR	INDOOR
JANUARY WIND (MPH) = 4.0	LONGITUDE (DEG) = 112.4	TEMPERATURE	BO = 20.49 F	WINTER	32 F	70 F
COOLING(TOTAL/SENS.) = 1.02	ELEVATION (FT) = 1101.	CONSTANTS:	PO = 0.575 RAD	SUMMER	107 F	78 F

BUILDING DESIGN MONTHLY THERMAL LOADS

MONTH	R-40 INSULATION BIN HEAT LEAK COEFFICIENTS(32F)		UNGLAZED PANEL HEAT	DOMESTIC WATER HEAT	MEDIUM INSULATION HOUSE 1 1200 FT2		MEDIUM INSULATION HOUSE 2 2400 FT2		HIGH INSULATION HOUSE 3 1200 FT2		HIGH INSULATION HOUSE 4 2400 FT2	
(M)	TB(M)	SD(M)	PAN(M)	QHW(M)	QH(M)	QC(M)	QH(M)	QC(M)	QH(M)	QC(M)	QH(M)	QC(M)
	MBTU/FT2		MBTU/FT2	MBTU	MBTU	MBTU	MBTU	MBTU	MBTU	MBTU	MBTU	MBTU
JAN	1.058	0.556	71.70	1280	2650	590	7020	0	980	820	3530	1220
FEB	0.924	0.467	79.23	1150	2030	860	5600	1230	630	1160	2550	1740
MAR	1.097	0.529	105.54	1190	1500	1890	4560	2860	0	2330	1870	3510
APR	1.221	0.573	118.02	1020	0	3270	1670	5070	0	3740	0	5480
MAY	1.482	0.693	136.74	890	0	5520	0	8540	0	5620	0	8270
JUN	1.633	0.774	149.13	730	0	8130	0	12870	0	7280	0	11050
JUL	1.833	0.888	161.25	680	0	10470	0	16730	0	8770	0	13380
AUG	1.872	0.932	157.87	680	0	10230	0	16250	0	8520	0	12880
SEP	1.740	0.889	137.51	740	0	8000	0	12400	0	6800	0	9980
OCT	1.625	0.852	119.20	900	0	4660	0	7170	0	4420	0	6430
NOV	1.366	0.729	88.90	1030	810	1930	2890	2970	0	2070	1710	3150
DEC	1.200	0.644	72.16	1200	2150	820	5980	0	840	1020	3250	1540
ANNUAL THERMAL LOADS (MBTU)				11490	9140	56370	27720	86090	2450	52550	12910	78630
DESIGN HOURLY THERMAL LOADS (BTU/HR)					18765	29751	36211	52104	12404	23941	23654	40710

CALCULATED ACES DESIGNS

ACES SIZE	SYSTEM DESIGN PARAMETERS		HOUSE 1 ICE MAKER	HOUSE 1 BRINE CHILLER	HOUSE 2 ICE MAKER	HOUSE 2 BRINE CHILLER	HOUSE 3 ICE MAKER	HOUSE 3 BRINE CHILLER	HOUSE 4 ICE MAKER	HOUSE 4 BRINE CHILLER
FULL	VOLUME OF ICE BIN, FT3	V	759	448	2559	1492				
	AREA OF PANEL, FT2	A	0	0	0	0				
	LENGTH OF ICE BIN COIL, FT	L	0	262	0	542				
	USAGE OF ELECTRICITY, KWH/YR	U	11467	11357	17877	17884				
	EFFICIENCY (ANNUAL COP)	E	1.97	1.99	2.05	2.05				
PARTIAL	VOLUME OF ICE BIN, FT3	V	561	315	1664	938				
	AREA OF PANEL, FT2	A	0	0	19	20				
	LENGTH OF ICE BIN COIL, FT	L	0	251	0	512				
	USAGE OF ELECTRICITY, KWH/YR	U	11822	11713	18982	18644				
	EFFICIENCY (ANNUAL COP)	E	1.91	1.93	1.93	1.97				
MINIMUM	VOLUME OF ICE BIN, FT3	V	364	182	769	384	210	105	446	223
	AREA OF PANEL, FT2	A	0	10	42	45	0	0	0	0
	LENGTH OF ICE BIN COIL, FT	L	0	234	0	458	0	152	0	294
	USAGE OF ELECTRICITY, KWH/YR	U	11827	11941	19221	19223	10376	10405	15989	15978
	EFFICIENCY (ANNUAL COP)	E	1.91	1.89	1.91	1.91	1.88	1.87	1.89	1.89

TUCSON, ARIZONA

GEOGRAPHICAL ZONE = M	LATITUDE (DEG) = 32.2	GROUND	AO = 68.30 F	AIR TEMP:	OUTDOOR	INDOOR
JANUARY WIND (MPH) = 7.0	LONGITUDE (DEG) = 110.9	TEMPERATURE	BO = 17.97 F	WINTER	29 F	70 F
COOLING(TOTAL/SENS.) = 1.02	ELEVATION (FT) = 2654.	CONSTANTS:	PO = 0.593 RAD	SUMMER	102 F	78 F

BUILDING DESIGN MONTHLY THERMAL LOADS

MONTH	R-40 INSULATION BIN HEAT LEAK COEFFICIENTS(32F)		UNGLAZED PANEL HEAT	DOMESTIC WATER HEAT	MEDIUM INSULATION HOUSE 1 1200 FT2		MEDIUM INSULATION HOUSE 2 2400 FT2		HIGH INSULATION HOUSE 3 1200 FT2		HIGH INSULATION HOUSE 4 2400 FT2	
(M)	TB(M) MBTU/FT2	SD(M) MBTU/FT2	PAN(M) MBTU/FT2	QHW(M) MBTU	QH(M) MBTU	QC(M) MBTU	QH(M) MBTU	QC(M) MBTU	QH(M) MBTU	QC(M) MBTU	QH(M) MBTU	QC(M) MBTU
JAN	1.011	0.530	83.96	1290	2860	0	7480	0	1080	740	3760	1100
FEB	0.883	0.447	79.98	1160	2490	650	6540	0	880	920	3110	1370
MAR	1.039	0.503	111.91	1220	1980	1600	5610	2410	580	2010	2440	3070
APR	1.143	0.539	128.15	1060	660	2930	2490	4520	0	3420	0	5060
MAY	1.374	0.645	149.41	960	0	4590	0	7110	0	4920	0	7170
JUN	1.505	0.715	161.33	810	0	6710	0	10330	0	6430	0	9520
JUL	1.685	0.817	168.74	760	0	7950	0	11910	0	7210	0	10470
AUG	1.723	0.857	153.40	760	0	7650	0	11330	0	6910	0	9840
SEP	1.607	0.820	151.82	800	0	6520	0	9840	0	5980	0	8630
OCT	1.512	0.790	138.59	950	0	3910	0	5980	0	4000	0	5730
NOV	1.282	0.681	102.07	1060	1100	1560	3640	2360	430	1760	2040	2660
DEC	1.139	0.608	88.62	1220	2240	790	6210	0	850	1020	3280	1550
ANNUAL THERMAL LOADS (MBTU)				12050	11330	44860	31970	65790	3820	45320	14630	66170
DESIGN HOURLY THERMAL LOADS (BTU/HR)					20706	25477	39988	43717	13602	21435	25958	35848

CALCULATED ACES DESIGNS

ACES SIZE	SYSTEM DESIGN PARAMETERS		HOUSE 1 ICE MAKER	HOUSE 1 BRINE CHILLER	HOUSE 2 ICE MAKER	HOUSE 2 BRINE CHILLER	HOUSE 3 ICE MAKER	HOUSE 3 BRINE CHILLER	HOUSE 4 ICE MAKER	HOUSE 4 BRINE CHILLER
	VOLUME OF ICE BIN, FT3	V	1067	626	3336	1955				
	AREA OF PANEL, FT2	A	0	0	0	0				
FULL	LENGTH OF ICE BIN COIL, FT	L	0	298	0	611				
	USAGE OF ELECTRICITY, KWH/YR	U	9352	9356	14344	14394				
	EFFICIENCY (ANNUAL COP)	E	2.14	2.14	2.24	2.24				
	VOLUME OF ICE BIN, FT3	V	726	409	2074	1181				
	AREA OF PANEL, FT2	A	0	0	19	20				
PARTIAL	LENGTH OF ICE BIN COIL, FT	L	0	283	0	575				
	USAGE OF ELECTRICITY, KWH/YR	U	9724	9735	15361	15399				
	EFFICIENCY (ANNUAL COP)	E	2.06	2.05	2.09	2.09				
	VOLUME OF ICE BIN, FT3	V	384	192	812	406	219	109	467	233
	AREA OF PANEL, FT2	A	14	15	43	45	0	0	0	0
MINIMUM	LENGTH OF ICE BIN COIL, FT	L	0	257	0	503	0	166	0	321
	USAGE OF ELECTRICITY, KWH/YR	U	9869	9876	15903	16016	9170	9173	13866	13882
	EFFICIENCY (ANNUAL COP)	E	2.03	2.02	2.02	2.01	1.95	1.95	1.96	1.96

LITTLE ROCK, ARKANSAS

GEOGRAPHICAL ZONE	= D	LATITUDE (DEG)	= 34.9	GROUND	AO = 62.26 F	AIR TEMP:	OUTDOOR INDOOR
JANUARY WIND (MPH)	= 8.0	LONGITUDE (DEG)	= 92.1	TEMPERATURE	BO = 20.54 F	WINTER	15 F 70 F
COOLING(TOTAL/SENS.)	= 1.19	ELEVATION (FT)	= 311.	CONSTANTS:	PO = 0.546 RAD	SUMMER	96 F 78 F

BUILDING DESIGN MONTHLY THERMAL LOADS

MONTH (M)	R-40 INSULATION BIN HEAT LEAK COEFFICIENTS(32F) TB(M) MBTU/FT2	SD(M) MBTU/FT2	UNGLAZED PANEL HEAT PAN(M) MBTU/FT2	DOMESTIC WATER HEAT QHW(M) MBTU	MEDIUM INSULATION HOUSE 1 1200 FT2 QH(M) MBTU	QC(M) MBTU	HOUSE 2 2400 FT2 QH(M) MBTU	QC(M) MBTU	HIGH INSULATION HOUSE 3 1200 FT2 QH(M) MBTU	QC(M) MBTU	HOUSE 4 2400 FT2 QH(M) MBTU	QC(M) MBTU
JAN	0.730	0.391	44.30	1440	6130	0	14600	0	2590	0	7130	0
FEB	0.633	0.320	55.16	1290	4590	0	11220	0	1740	0	5090	0
MAR	0.781	0.370	82.53	1340	3690	0	9420	0	1290	600	4120	0
APR	0.919	0.422	112.92	1170	1350	1180	4210	1540	0	1840	1440	2460
MAY	1.172	0.538	126.14	1040	0	2950	1280	4170	0	4010	0	5300
JUN	1.331	0.624	141.64	880	0	5180	0	7300	0	6070	0	8500
JUL	1.517	0.731	143.69	830	0	7230	0	10470	0	7380	0	10770
AUG	1.550	0.772	145.52	840	0	7240	0	10500	0	7180	0	10400
SEP	1.422	0.731	125.76	890	0	4540	0	6330	0	4890	0	6590
OCT	1.292	0.686	100.64	1070	610	1900	2290	2650	0	2280	1120	3040
NOV	1.042	0.567	69.59	1190	2720	0	7150	0	1200	600	3800	780
DEC	0.868	0.477	54.05	1360	4860	0	11960	0	2120	0	6060	0
ANNUAL THERMAL LOADS (MBTU)				13340	23950	30220	62130	42960	8940	34850	28760	47840
DESIGN HOURLY THERMAL LOADS (BTU/HR)					30422	22862	58934	38577	19566	20912	37461	35850

CALCULATED ACES DESIGNS

ACES SIZE	SYSTEM DESIGN PARAMETERS		HOUSE 1 ICE MAKER	HOUSE 1 BRINE CHILLER	HOUSE 2 ICE MAKER	HOUSE 2 BRINE CHILLER	HOUSE 3 ICE MAKER	HOUSE 3 BRINE CHILLER	HOUSE 4 ICE MAKER	HOUSE 4 BRINE CHILLER
	VOLUME OF ICE BIN, FT3	V	3558	2101	7998	4712	1618	958	3915	2309
	AREA OF PANEL, FT2	A	0	0	0	0	0	0	0	0
FULL	LENGTH OF ICE BIN COIL, FT	L	0	484	0	954	0	299	0	588
	USAGE OF ELECTRICITY, KWH/YR	U	7456	7480	11882	11511	7547	7557	10908	10940
	EFFICIENCY (ANNUAL COP)	E	2.65	2.64	2.92	3.01	2.22	2.21	2.42	2.41
	VOLUME OF ICE BIN, FT3	V	2129	1226	4742	2727	996	573	2354	1353
	AREA OF PANEL, FT2	A	25	24	51	51	12	12	27	28
PARTIAL	LENGTH OF ICE BIN COIL, FT	L	0	454	0	895	0	281	0	552
	USAGE OF ELECTRICITY, KWH/YR	U	8558	8388	14265	13917	8047	8061	12343	12023
	EFFICIENCY (ANNUAL COP)	E	2.31	2.36	2.43	2.49	2.08	2.08	2.13	2.19
	VOLUME OF ICE BIN, FT3	V	701	350	1485	742	374	187	793	396
	AREA OF PANEL, FT2	A	58	62	126	133	31	33	67	72
MINIMUM	LENGTH OF ICE BIN COIL, FT	L	0	388	0	762	0	244	0	473
	USAGE OF ELECTRICITY, KWH/YR	U	9194	9187	15410	15684	8290	8334	12845	12831
	EFFICIENCY (ANNUAL COP)	E	2.15	2.15	2.25	2.21	2.02	2.01	2.05	2.05

LOS ANGELES, CALIFORNIA

GEOGRAPHICAL ZONE	= P	LATITUDE (DEG)	= 34.0	GROUND	AO = 62.00 F	AIR TEMP:	OUTDOOR INDOOR
JANUARY WIND (MPH)	= 7.0	LONGITUDE (DEG)	= 118.2	TEMPERATURE	BO = 6.95 F	WINTER	37 F 70 F
COOLING(TOTAL/SENS.)	= 1.04	ELEVATION (FT)	= 270.	CONSTANTS:	PO = 0.939 RAD	SUMMER	88 F 78 F

BUILDING DESIGN MONTHLY THERMAL LOADS

MONTH (M)	R-40 INSULATION BIN HEAT LEAK COEFFICIENTS(32F) TB(M) MBTU/FT2	SD(M) MBTU/FT2	UNGLAZED PANEL HEAT PAN(M) MBTU/FT2	DOMESTIC WATER HEAT QHW(M) MBTU	MEDIUM INSULATION HOUSE 1 1200 FT2 QH(M) MBTU	QC(M) MBTU	HOUSE 2 2400 FT2 QH(M) MBTU	QC(M) MBTU	HIGH INSULATION HOUSE 3 1200 FT2 QH(M) MBTU	QC(M) MBTU	HOUSE 4 2400 FT2 QH(M) MBTU	QC(M) MBTU
JAN	1.013	0.520	80.29	1230	2000	0	5830	0	460	500	2510	700
FEB	0.883	0.448	78.57	1120	1680	0	5030	0	310	470	2000	670
MAR	0.975	0.487	93.71	1230	1740	540	5320	0	260	770	2000	1140
APR	0.978	0.481	91.10	1160	1220	710	4210	920	0	1020	1360	1460
MAY	1.076	0.523	91.88	1150	710	1240	3270	1690	0	1650	780	2420
JUN	1.112	0.540	94.26	1060	0	1880	1830	2610	0	2430	0	3350
JUL	1.216	0.594	102.16	1050	0	3020	0	4540	0	3980	0	5190
AUG	1.255	0.620	105.44	1030	0	2960	0	4440	0	4070	0	5080
SEP	1.216	0.609	102.88	1010	0	2780	0	4100	0	3650	0	4800
OCT	1.219	0.619	100.33	1080	0	1670	1490	2250	0	2280	0	3000
NOV	1.118	0.573	92.94	1090	740	910	3130	1190	0	1250	1100	1790
DEC	1.079	0.556	85.59	1180	1510	470	4840	0	300	720	2030	1010
ANNUAL THERMAL LOADS (MBTU)				13390	9600	16180	34950	21740	1330	22790	11780	30610
DESIGN HOURLY THERMAL LOADS (BTU/HR)					17296	14136	33445	21915	10825	16760	20648	25543

CALCULATED ACES DESIGNS

ACES SIZE	SYSTEM DESIGN PARAMETERS		HOUSE 1 ICE MAKER	HOUSE 1 BRINE CHILLER	HOUSE 2 ICE MAKER	HOUSE 2 BRINE CHILLER	HOUSE 3 ICE MAKER	HOUSE 3 BRINE CHILLER	HOUSE 4 ICE MAKER	HOUSE 4 BRINE CHILLER
	VOLUME OF ICE BIN, FT3	V	1261	757	3641	2260				
	AREA OF PANEL, FT2	A	0	0	0	0				
FULL	LENGTH OF ICE BIN COIL, FT	L	0	261	0	531				
	USAGE OF ELECTRICITY, KWH/YR	U	3974	3909	6510	6090				
	EFFICIENCY (ANNUAL COP)	E	2.89	2.94	3.15	3.37				
	VOLUME OF ICE BIN, FT3	V	780	453	2147	1293				
	AREA OF PANEL, FT2	A	0	0	16	16				
PARTIAL	LENGTH OF ICE BIN COIL, FT	L	0	245	0	497				
	USAGE OF ELECTRICITY, KWH/YR	U	4529	4562	7953	7823				
	EFFICIENCY (ANNUAL COP)	E	2.53	2.52	2.58	2.62				
	VOLUME OF ICE BIN, FT3	V	299	149	653	326	157	78	346	173
	AREA OF PANEL, FT2	A	15	16	37	38	0	0	0	0
MINIMUM	LENGTH OF ICE BIN COIL, FT	L	0	213	0	418	0	130	0	253
	USAGE OF ELECTRICITY, KWH/YR	U	4681	4746	8504	8680	4873	4872	7197	7209
	EFFICIENCY (ANNUAL COP)	E	2.45	2.42	2.41	2.37	2.26	2.26	2.27	2.27

MERCED, CALIFORNIA

GEOGRAPHICAL ZONE = 0	LATITUDE (DEG) = 37.4	GROUND	AO = 65.86 F	AIR TEMP:	OUTDOOR	INDOOR
JANUARY WIND (MPH) = 6.0	LONGITUDE (DEG) = 120.6	TEMPERATURE	BO = 24.91 F	WINTER	29 F	70 F
COOLING(TOTAL/SENS.) = 1.00	ELEVATION (FT) = 188.	CONSTANTS:	PO = 0.568 RAD	SUMMER	99 F	78 F

BUILDING DESIGN MONTHLY THERMAL LOADS

MONTH	R-40 INSULATION BIN HEAT LEAK COEFFICIENTS(32F)		UNGLAZED PANEL HEAT	DOMESTIC WATER HEAT	MEDIUM INSULATION HOUSE 1 1200 FT2		MEDIUM INSULATION HOUSE 2 2400 FT2		HIGH INSULATION HOUSE 3 1200 FT2		HIGH INSULATION HOUSE 4 2400 FT2	
(M)	TB(M) MBTU/FT2	SD(M) MBTU/FT2	PAN(M) MBTU/FT2	QHW(M) MBTU	QH(M) MBTU	QC(M) MBTU	QH(M) MBTU	QC(M) MBTU	QH(M) MBTU	QC(M) MBTU	QH(M) MBTU	QC(M) MBTU
JAN	0.783	0.424	46.12	1440	4760	0	11930	0	1830	0	5520	0
FEB	0.671	0.341	59.87	1290	3300	0	8350	0	1050	0	3660	0
MAR	0.835	0.393	87.27	1330	2980	0	7750	0	810	780	3260	1160
APR	1.003	0.456	99.55	1120	1600	1580	4790	2310	0	2060	1790	3070
MAY	1.305	0.594	119.97	960	570	2870	2430	4440	0	3260	0	4870
JUN	1.504	0.700	137.93	770	0	4830	0	7530	0	4830	0	7140
JUL	1.730	0.831	261.49	700	0	21780	0	39490	0	17490	0	30840
AUG	1.775	0.882	134.16	710	0	6250	0	9640	0	5560	0	8110
SEP	1.628	0.838	120.48	780	0	4740	0	7300	0	4420	0	6440
OCT	1.472	0.784	96.45	980	0	2610	1190	4000	0	2740	0	4020
NOV	1.172	0.642	63.89	1140	1870	400	5390	0	730	520	2990	740
DEC	0.955	0.531	41.32	1340	3880	0	10030	0	1550	0	4940	0
ANNUAL THERMAL LOADS (MBTU)				12560	18960	45060	51860	74710	5970	41660	22160	66390
DESIGN HOURLY THERMAL LOADS (BTU/HR)					22972	23808	44520	41429	14088	19681	26930	33273

CALCULATED ACES DESIGNS

ACES SIZE	SYSTEM DESIGN PARAMETERS		HOUSE 1 ICE MAKER	HOUSE 1 BRINE CHILLER	HOUSE 2 ICE MAKER	HOUSE 2 BRINE CHILLER	HOUSE 3 ICE MAKER	HOUSE 3 BRINE CHILLER	HOUSE 4 ICE MAKER	HOUSE 4 BRINE CHILLER
	VOLUME OF ICE BIN, FT3	V	2729	1622	6232	3780	1194	713	2876	1697
	AREA OF PANEL, FT2	A	0	0	0	0	0	0	0	0
FULL	LENGTH OF ICE BIN COIL, FT	L	0	366	0	726	0	216	0	424
	USAGE OF ELECTRICITY, KWH/YR	U	10264	10278	17151	17178	8677	8567	14324	14065
	EFFICIENCY (ANNUAL COP)	E	2.19	2.18	2.38	2.37	2.03	2.06	2.07	2.11
	VOLUME OF ICE BIN, FT3	V	1652	955	3735	2199	748	432	1760	1009
	AREA OF PANEL, FT2	A	20	20	44	43	11	11	23	23
PARTIAL	LENGTH OF ICE BIN COIL, FT	L	0	344	0	681	0	203	0	398
	USAGE OF ELECTRICITY, KWH/YR	U	10919	10926	19317	19365	9091	9099	15136	14978
	EFFICIENCY (ANNUAL COP)	E	2.05	2.05	2.11	2.11	1.94	1.94	1.96	1.98
	VOLUME OF ICE BIN, FT3	V	574	287	1237	618	303	151	644	322
	AREA OF PANEL, FT2	A	51	56	114	123	27	30	61	66
MINIMUM	LENGTH OF ICE BIN COIL, FT	L	0	296	0	582	0	178	0	345
	USAGE OF ELECTRICITY, KWH/YR	U	11084	11072	20375	20355	9282	9184	15584	15312
	EFFICIENCY (ANNUAL COP)	E	2.02	2.03	2.00	2.00	1.90	1.92	1.90	1.93

SAN DIEGO, CALIFORNIA

GEOGRAPHICAL ZONE = 0	LATITUDE (DEG) = 32.7	GROUND	AO = 62.21 F	AIR TEMP:	OUTDOOR	INDOOR
JANUARY WIND (MPH) = 6.0	LONGITUDE (DEG) = 117.1	TEMPERATURE	BO = 6.84 F	WINTER	44 F	70 F
COOLING(TOTAL/SENS.) = 1.08	ELEVATION (FT) = 48.	CONSTANTS:	PO = 0.935 RAD	SUMMER	88 F	78 F

BUILDING DESIGN MONTHLY THERMAL LOADS

MONTH	R-40 INSULATION BIN HEAT LEAK COEFFICIENTS(32F)		UNGLAZED PANEL HEAT	DOMESTIC WATER HEAT	MEDIUM INSULATION				HIGH INSULATION			
					HOUSE 1 1200 FT2		HOUSE 2 2400 FT2		HOUSE 3 1200 FT2		HOUSE 4 2400 FT2	
(M)	TB(M) MBTU/FT2	SD(M) MBTU/FT2	PAN(M) MBTU/FT2	QHW(M) MBTU	QH(M) MBTU	QC(M) MBTU	QH(M) MBTU	QC(M) MBTU	QH(M) MBTU	QC(M) MBTU	QH(M) MBTU	QC(M) MBTU
JAN	1.022	0.524	74.60	1220	1800	0	5420	0	350	310	2250	0
FEB	0.892	0.453	70.26	1120	1520	0	4710	0	230	300	1790	410
MAR	0.986	0.492	89.79	1230	1510	300	4890	0	160	460	1710	670
APR	0.987	0.485	90.37	1160	970	550	3750	0	0	820	1050	1150
MAY	1.084	0.528	102.51	1140	520	860	2900	1080	0	1240	560	1740
JUN	1.120	0.544	95.02	1060	0	1350	1690	1710	0	1930	0	2500
JUL	1.223	0.598	108.36	1050	0	2270	0	3160	0	3430	0	4070
AUG	1.261	0.623	114.06	1030	0	2470	0	3530	0	3980	0	4480
SEP	1.221	0.611	100.61	1010	0	2240	0	3070	0	3460	0	4000
OCT	1.225	0.621	95.52	1080	0	1490	1050	1860	0	2270	0	2740
NOV	1.125	0.576	78.36	1090	640	700	2930	870	0	1010	950	1420
DEC	1.087	0.560	70.27	1180	1330	0	4520	0	190	430	1770	590
ANNUAL THERMAL LOADS (MBTU)				13370	8290	12230	31860	15280	930	19640	10080	23770
DESIGN HOURLY THERMAL LOADS (BTU/HR)					14161	12806	27419	19468	8466	16219	16141	24181

CALCULATED ACES DESIGNS

ACES SIZE	SYSTEM DESIGN PARAMETERS		HOUSE 1 ICE MAKER	HOUSE 1 BRINE CHILLER	HOUSE 2 ICE MAKER	HOUSE 2 BRINE CHILLER	HOUSE 3 ICE MAKER	HOUSE 3 BRINE CHILLER	HOUSE 4 ICE MAKER	HOUSE 4 BRINE CHILLER
	VOLUME OF ICE BIN, FT3	V	1323	794	3483	1695	313	190	1091	649
	AREA OF PANEL, FT2	A	0	0	0	10	0	0	0	0
FULL	LENGTH OF ICE BIN COIL, FT	L	0	220	0	431	0	117	0	241
	USAGE OF ELECTRICITY, KWH/YR	U	3294	3223	6264	6258	4135	4134	5386	5249
	EFFICIENCY (ANNUAL COP)	E	3.01	3.08	2.83	2.83	2.40	2.41	2.57	2.64
	VOLUME OF ICE BIN, FT3	V	801	467	2049	1001	230	131	706	405
	AREA OF PANEL, FT2	A	0	0	19	23	0	0	0	0
PARTIAL	LENGTH OF ICE BIN COIL, FT	L	0	206	0	404	0	112	0	227
	USAGE OF ELECTRICITY, KWH/YR	U	3820	3768	6670	6820	4420	4420	5938	5864
	EFFICIENCY (ANNUAL COP)	E	2.60	2.64	2.66	2.60	2.25	2.25	2.33	2.36
	VOLUME OF ICE BIN, FT3	V	280	140	615	307	146	73	321	160
	AREA OF PANEL, FT2	A	16	17	38	40	0	0	14	15
MINIMUM	LENGTH OF ICE BIN COIL, FT	L	0	177	0	349	0	104	0	202
	USAGE OF ELECTRICITY, KWH/YR	U	3995	3949	7335	7329	4458	4456	6058	6072
	EFFICIENCY (ANNUAL COP)	E	2.49	2.51	2.42	2.42	2.23	2.23	2.28	2.28

COLORADO SPRINGS, COLORADO

GEOGRAPHICAL ZONE	= L	LATITUDE (DEG)	= 38.8	GROUND	AO = 48.89 F	AIR TEMP:	OUTDOOR INDOOR
JANUARY WIND (MPH)	= 10.0	LONGITUDE (DEG)	= 104.7	TEMPERATURE	BO = 21.11 F	WINTER	-3 F 70 F
COOLING(TOTAL/SENS.)	= 1.00	ELEVATION (FT)	= 6145.	CONSTANTS:	PO = 0.623 RAD	SUMMER	88 F 78 F

BUILDING DESIGN MONTHLY THERMAL LOADS

MONTH	R-40 INSULATION BIN HEAT LEAK COEFFICIENTS(32F)		UNGLAZED PANEL HEAT	DOMESTIC WATER HEAT	MEDIUM INSULATION HOUSE 1 1200 FT2		MEDIUM INSULATION HOUSE 2 2400 FT2		HIGH INSULATION HOUSE 3 1200 FT2		HIGH INSULATION HOUSE 4 2400 FT2	
(M)	TB(M) MBTU/FT2	SD(M) MBTU/FT2	PAN(M) MBTU/FT2	QHW(M) MBTU	QH(M) MBTU	QC(M) MBTU	QH(M) MBTU	QC(M) MBTU	QH(M) MBTU	QC(M) MBTU	QH(M) MBTU	QC(M) MBTU
JAN	0.235	0.147	39.20	1560	11740	0	25660	0	5730	0	13320	0
FEB	0.171	0.093	42.74	1440	9630	0	21270	0	4430	0	10520	0
MAR	0.255	0.110	54.47	1580	9500	0	21200	0	4250	0	10290	0
APR	0.404	0.165	81.90	1460	6110	0	14180	0	2400	620	6440	0
MAY	0.642	0.272	111.89	1400	3470	1020	8790	0	970	1600	3440	2410
JUN	0.829	0.370	136.10	1250	1350	2050	4260	2980	0	2800	1260	4090
JUL	1.016	0.477	145.40	1200	0	3070	2150	4720	0	3810	0	5550
AUG	1.067	0.526	135.88	1150	0	2870	2000	4380	0	3510	0	5100
SEP	0.968	0.501	118.54	1130	1440	1920	4360	2860	0	2410	1800	3570
OCT	0.830	0.454	89.63	1240	3700	0	9210	0	1500	1030	4580	1530
NOV	0.591	0.343	50.66	1300	7230	0	16480	0	3480	0	8710	0
DEC	0.390	0.241	38.36	1460	9940	0	22150	0	4740	0	11440	0
ANNUAL THERMAL LOADS (MBTU)				16170	64110	10930	151710	14940	27500	15780	71800	22250
DESIGN HOURLY THERMAL LOADS (BTU/HR)					45025	11321	87513	16993	28250	14441	54279	23277

CALCULATED ACES DESIGNS

ACES SIZE	SYSTEM DESIGN PARAMETERS		HOUSE 1 ICE MAKER	HOUSE 1 BRINE CHILLER	HOUSE 2 ICE MAKER	HOUSE 2 BRINE CHILLER	HOUSE 3 ICE MAKER	HOUSE 3 BRINE CHILLER	HOUSE 4 ICE MAKER	HOUSE 4 BRINE CHILLER
	VOLUME OF ICE BIN, FT3	V					3553	1795	4677	2413
	AREA OF PANEL, FT2	A					14	20	82	88
FULL	LENGTH OF ICE BIN COIL, FT	L					0	445	0	820
	USAGE OF ELECTRICITY, KWH/YR	U					5605	5619	10931	10997
	EFFICIENCY (ANNUAL COP)	E					3.11	3.10	2.95	2.94
	VOLUME OF ICE BIN, FT3	V					2114	1066	3027	1551
	AREA OF PANEL, FT2	A					42	46	115	118
PARTIAL	LENGTH OF ICE BIN COIL, FT	L					0	418	0	777
	USAGE OF ELECTRICITY, KWH/YR	U					6138	6281	11696	11729
	EFFICIENCY (ANNUAL COP)	E					2.84	2.77	2.76	2.75
	VOLUME OF ICE BIN, FT3	V	1231	615	2520	1260	675	337	1377	688
	AREA OF PANEL, FT2	A	143	147	295	303	77	79	159	163
MINIMUM	LENGTH OF ICE BIN COIL, FT	L	0	588	0	1150	0	362	0	702
	USAGE OF ELECTRICITY, KWH/YR	U	9955	9960	19865	19858	6833	6829	12426	12420
	EFFICIENCY (ANNUAL COP)	E	2.68	2.68	2.70	2.70	2.55	2.55	2.60	2.60

DENVER, COLORADO

GEOGRAPHICAL ZONE = L	LATITUDE (DEG) = 39.7	GROUND	AO = 49.78 F	AIR TEMP:	OUTDOOR	INDOOR
JANUARY WIND (MPH) = 10.0	LONGITUDE (DEG) = 104.9	TEMPERATURE	BO = 22.21 F	WINTER	-5 F	70 F
COOLING(TOTAL/SENS.) = 1.00	ELEVATION (FT) = 5283.	CONSTANTS:	PO = 0.635 RAD	SUMMER	91 F	78 F

BUILDING DESIGN MONTHLY THERMAL LOADS

MONTH	R-40 INSULATION BIN HEAT LEAK COEFFICIENTS(32F)		UNGLAZED PANEL HEAT	DOMESTIC WATER HEAT	MEDIUM INSULATION				HIGH INSULATION			
					HOUSE 1 1200 FT2		HOUSE 2 2400 FT2		HOUSE 3 1200 FT2		HOUSE 4 2400 FT2	
(M)	TB(M) MBTU/FT2	SD(M)	PAN(M) MBTU/FT2	QHW(M) MBTU	QH(M) MBTU	QC(M) MBTU	QH(M) MBTU	QC(M) MBTU	QH(M) MBTU	QC(M) MBTU	QH(M) MBTU	QC(M) MBTU
JAN	0.250	0.157	32.13	1570	11980	0	26180	0	5850	0	13670	0
FEB	0.180	0.099	33.37	1450	10060	0	22160	0	4620	0	11000	0
MAR	0.266	0.115	51.76	1580	9520	0	21240	0	4210	0	10260	0
APR	0.421	0.172	74.06	1450	5850	0	13690	0	2190	560	6010	0
MAY	0.671	0.284	98.49	1380	3130	810	8130	0	770	1490	3000	2130
JUN	0.869	0.387	123.91	1210	1060	1990	3630	2820	0	2800	960	3990
JUL	1.067	0.500	136.84	1150	0	2930	1440	4390	0	3790	0	5290
AUG	1.123	0.553	132.27	1110	0	2690	1310	3950	0	3450	0	4720
SEP	1.021	0.528	109.70	1100	1180	1850	3790	2700	0	2330	1550	3370
OCT	0.878	0.480	83.77	1220	3230	730	8280	0	1220	1100	4020	1590
NOV	0.628	0.364	47.49	1300	7060	0	16140	0	3390	0	8580	0
DEC	0.416	0.257	37.25	1470	9850	0	21970	0	4720	0	11440	0
ANNUAL THERMAL LOADS (MBTU)				15990	62920	11000	147960	13860	26970	15520	70490	21090
DESIGN HOURLY THERMAL LOADS (BTU/HR)					45907	10899	89208	16270	29095	13589	55909	21706

CALCULATED ACES DESIGNS

ACES SIZE	SYSTEM DESIGN PARAMETERS		HOUSE 1 ICE MAKER	HOUSE 1 BRINE CHILLER	HOUSE 2 ICE MAKER	HOUSE 2 BRINE CHILLER	HOUSE 3 ICE MAKER	HOUSE 3 BRINE CHILLER	HOUSE 4 ICE MAKER	HOUSE 4 BRINE CHILLER
	VOLUME OF ICE BIN, FT3	V					3680	1828	4567	2341
	AREA OF PANEL, FT2	A					13	22	97	103
FULL	LENGTH OF ICE BIN COIL, FT	L					0	458	0	839
	USAGE OF ELECTRICITY, KWH/YR	U					5431	5524	10728	10793
	EFFICIENCY (ANNUAL COP)	E					3.15	3.10	2.94	2.92
	VOLUME OF ICE BIN, FT3	V					2183	1085	2989	1523
	AREA OF PANEL, FT2	A					47	51	134	138
PARTIAL	LENGTH OF ICE BIN COIL, FT	L					0	430	0	796
	USAGE OF ELECTRICITY, KWH/YR	U					6038	6016	11439	11240
	EFFICIENCY (ANNUAL COP)	E					2.84	2.85	2.76	2.80
	VOLUME OF ICE BIN, FT3	V	1255	627	2569	1284	687	343	1411	705
	AREA OF PANEL, FT2	A	171	176	352	363	91	94	190	195
MINIMUM	LENGTH OF ICE BIN COIL, FT	L	0	599	0	1173	0	373	0	723
	USAGE OF ELECTRICITY, KWH/YR	U	9738	9752	19382	19313	6712	6710	12122	12127
	EFFICIENCY (ANNUAL COP)	E	2.71	2.70	2.69	2.70	2.55	2.55	2.60	2.60

GRAND JUNCTION, COLORADO

GEOGRAPHICAL ZONE	= L	LATITUDE (DEG)	= 39.1	GROUND	AO = 52.89 F	AIR TEMP:	OUTDOOR INDOOR
JANUARY WIND (MPH)	= 6.0	LONGITUDE (DEG)	= 108.5	TEMPERATURE	BO = 24.98 F	WINTER	2 F 70 F
COOLING(TOTAL/SENS.)	= 1.00	ELEVATION (FT)	= 4843.	CONSTANTS:	PO = 0.543 RAD	SUMMER	94 F 78 F

BUILDING DESIGN MONTHLY THERMAL LOADS

MONTH	R-40 INSULATION BIN HEAT LEAK COEFFICIENTS(32F)		UNGLAZED PANEL HEAT	DOMESTIC WATER HEAT	MEDIUM INSULATION				HIGH INSULATION			
					HOUSE 1 1200 FT2		HOUSE 2 2400 FT2		HOUSE 3 1200 FT2		HOUSE 4 2400 FT2	
(M)	TB(M) MBTU/FT2	SD(M) MBTU/FT2	PAN(M) MBTU/FT2	QHW(M) MBTU	QH(M) MBTU	QC(M) MBTU	QH(M) MBTU	QC(M) MBTU	QH(M) MBTU	QC(M) MBTU	QH(M) MBTU	QC(M) MBTU
JAN	0.295	0.179	30.89	1570	11030	0	24330	0	4960	0	12000	0
FEB	0.235	0.122	39.44	1440	8660	0	19450	0	3690	0	9040	0
MAR	0.359	0.154	65.64	1550	7200	0	16630	0	2920	0	7520	0
APR	0.547	0.227	91.24	1390	4240	0	10320	0	1360	930	4280	1380
MAY	0.835	0.359	121.04	1280	1910	1630	5550	2330	0	2300	1820	3390
JUN	1.048	0.473	160.38	1100	0	3570	1380	5520	0	4400	0	6340
JUL	1.254	0.594	171.42	1040	0	4730	0	7210	0	5430	0	7710
AUG	1.293	0.643	154.68	1010	0	4150	0	6340	0	4730	0	6670
SEP	1.155	0.602	137.33	1020	0	2750	1850	4260	0	3200	0	4670
OCT	0.978	0.538	97.85	1170	2330	880	6380	0	820	1190	3100	1770
NOV	0.692	0.403	50.43	1280	6040	0	14120	0	2850	0	7370	0
DEC	0.462	0.283	31.15	1470	10180	0	22610	0	4800	0	11700	0
ANNUAL THERMAL LOADS (MBTU)				15320	51590	17710	122620	25660	21400	22180	56830	31930
DESIGN HOURLY THERMAL LOADS (BTU/HR)					41662	16453	80962	27004	25923	16944	49778	28056

CALCULATED ACES DESIGNS

ACES SIZE	SYSTEM DESIGN PARAMETERS		HOUSE 1 ICE MAKER	HOUSE 1 BRINE CHILLER	HOUSE 2 ICE MAKER	HOUSE 2 BRINE CHILLER	HOUSE 3 ICE MAKER	HOUSE 3 BRINE CHILLER	HOUSE 4 ICE MAKER	HOUSE 4 BRINE CHILLER
FULL	VOLUME OF ICE BIN, FT3	V	4623	2320	6720	3407	3766	2152	8001	4468
	AREA OF PANEL, FT2	A	51	61	173	191	0	0	0	0
	LENGTH OF ICE BIN COIL, FT	L	0	646	0	1215	0	421	0	817
	USAGE OF ELECTRICITY, KWH/YR	U	8397	8262	16759	16831	5793	5633	9358	9516
	EFFICIENCY (ANNUAL COP)	E	2.95	3.00	2.86	2.85	2.98	3.06	3.26	3.20
PARTIAL	VOLUME OF ICE BIN, FT3	V	2895	1452	4559	2303	2185	1227	4629	2548
	AREA OF PANEL, FT2	A	95	104	247	262	31	31	64	65
	LENGTH OF ICE BIN COIL, FT	L	0	611	0	1159	0	394	0	765
	USAGE OF ELECTRICITY, KWH/YR	U	9038	9055	17502	17530	6582	6608	11240	11001
	EFFICIENCY (ANNUAL COP)	E	2.74	2.74	2.74	2.73	2.62	2.61	2.71	2.77
MINIMUM	VOLUME OF ICE BIN, FT3	V	1167	583	2398	1199	605	302	1257	628
	AREA OF PANEL, FT2	A	164	174	341	360	87	92	184	194
	LENGTH OF ICE BIN COIL, FT	L	0	546	0	1068	0	331	0	643
	USAGE OF ELECTRICITY, KWH/YR	U	9810	9800	18490	18750	7346	7340	12699	12689
	EFFICIENCY (ANNUAL COP)	E	2.53	2.53	2.59	2.56	2.35	2.35	2.40	2.40

WASHINGTON, DISTRICT OF COLUMBIA

GEOGRAPHICAL ZONE	= B	LATITUDE (DEG)	= 38.8	GROUND	AO = 55.22 F	AIR TEMP:	OUTDOOR	INDOOR
JANUARY WIND (MPH)	= 11.0	LONGITUDE (DEG)	= 77.0	TEMPERATURE	BO = 21.74 F	WINTER	14 F	70 F
COOLING(TOTAL/SENS.)	= 1.16	ELEVATION (FT)	= 14.	CONSTANTS:	PO = 0.613 RAD	SUMMER	95 F	78 F

BUILDING DESIGN MONTHLY THERMAL LOADS

MONTH	R-40 INSULATION BIN HEAT LEAK COEFFICIENTS(32F)		UNGLAZED PANEL HEAT	DOMESTIC WATER HEAT	MEDIUM INSULATION HOUSE 1 1200 FT2		MEDIUM INSULATION HOUSE 2 2400 FT2		HIGH INSULATION HOUSE 3 1200 FT2		HIGH INSULATION HOUSE 4 2400 FT2	
(M)	TB(M) MBTU/FT2	SD(M) MBTU/FT2	PAN(M) MBTU/FT2	QHW(M) MBTU	QH(M) MBTU	QC(M) MBTU	QH(M) MBTU	QC(M) MBTU	QH(M) MBTU	QC(M) MBTU	QH(M) MBTU	QC(M) MBTU
JAN	0.457	0.259	30.37	1580	9890	0	22110	0	4550	0	11390	0
FEB	0.372	0.193	36.76	1430	8240	0	18620	0	3550	0	9030	0
MAR	0.481	0.222	61.62	1500	6930	0	16230	0	2760	0	7330	0
APR	0.629	0.276	91.46	1310	3460	0	8860	0	1030	840	3490	1170
MAY	0.883	0.391	125.12	1180	1220	1820	4120	2450	0	2720	1150	3820
JUN	1.068	0.488	129.27	1000	0	2840	1090	3950	0	4060	0	5160
JUL	1.265	0.601	147.12	940	0	4190	0	5950	0	5540	0	7420
AUG	1.315	0.651	132.93	940	0	4030	0	5280	0	5010	0	6550
SEP	1.204	0.620	120.35	990	0	2500	1110	3480	0	3400	0	4400
OCT	1.067	0.574	95.49	1170	1590	960	4690	1140	510	1460	2230	1950
NOV	0.814	0.456	65.50	1300	3920	0	9910	0	1600	0	4850	0
DEC	0.615	0.355	35.49	1490	8230	0	18810	0	3780	0	9790	0
ANNUAL THERMAL LOADS (MBTU)				14830	43480	16340	105550	22250	17780	23030	49260	30470
DESIGN HOURLY THERMAL LOADS (BTU/HR)					33762	18188	65579	26689	20574	18540	39446	30711

CALCULATED ACES DESIGNS

ACES SIZE	SYSTEM DESIGN PARAMETERS		HOUSE 1 ICE MAKER	HOUSE 1 BRINE CHILLER	HOUSE 2 ICE MAKER	HOUSE 2 BRINE CHILLER	HOUSE 3 ICE MAKER	HOUSE 3 BRINE CHILLER	HOUSE 4 ICE MAKER	HOUSE 4 BRINE CHILLER
	VOLUME OF ICE BIN, FT3	V	4554	2191	5408	2722	3194	1849	6968	4027
	AREA OF PANEL, FT2	A	33	48	168	187	0	0	0	0
FULL	LENGTH OF ICE BIN COIL, FT	L	0	533	0	983	0	337	0	657
	USAGE OF ELECTRICITY, KWH/YR	U	7287	7391	14719	14748	5725	5536	8555	8281
	EFFICIENCY (ANNUAL COP)	E	3.00	2.96	2.84	2.83	2.85	2.94	3.24	3.35
	VOLUME OF ICE BIN, FT3	V	2808	1361	3801	1909	1881	1066	4085	2314
	AREA OF PANEL, FT2	A	73	85	234	249	28	28	59	59
PARTIAL	LENGTH OF ICE BIN COIL, FT	L	0	504	0	941	0	316	0	616
	USAGE OF ELECTRICITY, KWH/YR	U	8001	8007	15316	15334	6526	6535	10202	10239
	EFFICIENCY (ANNUAL COP)	E	2.73	2.73	2.73	2.73	2.50	2.49	2.72	2.71
	VOLUME OF ICE BIN, FT3	V	1062	531	2193	1096	568	284	1201	600
	AREA OF PANEL, FT2	A	143	149	300	312	75	79	161	168
MINIMUM	LENGTH OF ICE BIN COIL, FT	L	0	449	0	878	0	269	0	522
	USAGE OF ELECTRICITY, KWH/YR	U	8697	8692	15913	16134	7152	7148	11551	11545
	EFFICIENCY (ANNUAL COP)	E	2.51	2.52	2.63	2.59	2.28	2.28	2.40	2.40

APPALACHICOLA, FLORIDA

GEOGRAPHICAL ZONE	= E	LATITUDE (DEG)	= 29.7	GROUND	AO = 68.42 F	AIR TEMP:	OUTDOOR INDOOR
JANUARY WIND (MPH)	= 9.0	LONGITUDE (DEG)	= 85.0	TEMPERATURE	BO = 14.94 F	WINTER	29 F 70 F
COOLING(TOTAL/SENS.)	= 1.26	ELEVATION (FT)	= 20.	CONSTANTS:	PO = 0.613 RAD	SUMMER	91 F 78 F

BUILDING DESIGN MONTHLY THERMAL LOADS

MONTH	R-40 INSULATION BIN HEAT LEAK COEFFICIENTS(32F)		UNGLAZED PANEL HEAT	DOMESTIC WATER HEAT	MEDIUM INSULATION HOUSE 1 1200 FT2		HOUSE 2 2400 FT2		HIGH INSULATION HOUSE 3 1200 FT2		HOUSE 4 2400 FT2	
(M)	TB(M)	SD(M)	PAN(M)	QHW(M)	QH(M)	QC(M)	QH(M)	QC(M)	QH(M)	QC(M)	QH(M)	QC(M)
	MBTU/FT2		MBTU/FT2	MBTU	MBTU	MBTU	MBTU	MBTU	MBTU	MBTU	MBTU	MBTU
JAN	1.075	0.558	86.75	1240	2420	0	6570	0	970	570	3310	730
FEB	0.943	0.477	89.05	1120	1670	620	4840	0	560	990	2170	1260
MAR	1.092	0.533	110.20	1190	1100	1140	3820	1510	0	1680	1400	2210
APR	1.170	0.558	127.30	1050	0	2430	1140	3510	0	3470	0	4470
MAY	1.368	0.649	141.89	970	0	4680	0	6080	0	5590	0	7600
JUN	1.471	0.704	135.21	840	0	6530	0	9230	0	6830	0	9820
JUL	1.631	0.794	142.45	800	0	7910	0	11740	0	7680	0	11380
AUG	1.665	0.828	145.00	800	0	8070	0	12000	0	7650	0	11340
SEP	1.564	0.795	144.81	830	0	6680	0	9360	0	6550	0	9390
OCT	1.495	0.775	132.99	960	0	3940	0	5510	0	4340	0	5810
NOV	1.296	0.682	106.00	1040	500	1760	1950	2460	0	2200	1000	2920
DEC	1.184	0.624	86.06	1180	1630	620	4800	0	620	940	2450	1210
ANNUAL THERMAL LOADS (MBTU)				12020	7320	44380	23120	61400	2150	48490	10330	68130
DESIGN HOURLY THERMAL LOADS (BTU/HR)					20093	22670	38762	39301	13471	20247	25695	35164

CALCULATED ACES DESIGNS

ACES SIZE	SYSTEM DESIGN PARAMETERS		HOUSE 1 ICE MAKER	HOUSE 1 BRINE CHILLER	HOUSE 2 ICE MAKER	HOUSE 2 BRINE CHILLER	HOUSE 3 ICE MAKER	HOUSE 3 BRINE CHILLER	HOUSE 4 ICE MAKER	HOUSE 4 BRINE CHILLER
FULL	VOLUME OF ICE BIN, FT3	V	848	500	2730	1609				
	AREA OF PANEL, FT2	A	0	0	0	0				
	LENGTH OF ICE BIN COIL, FT	L	0	283	0	581				
	USAGE OF ELECTRICITY, KWH/YR	U	9209	9037	13159	13165				
	EFFICIENCY (ANNUAL COP)	E	2.03	2.07	2.15	2.15				
PARTIAL	VOLUME OF ICE BIN, FT3	V	594	335	1727	986				
	AREA OF PANEL, FT2	A	0	0	15	15				
	LENGTH OF ICE BIN COIL, FT	L	0	269	0	547				
	USAGE OF ELECTRICITY, KWH/YR	U	9418	9426	14077	14108				
	EFFICIENCY (ANNUAL COP)	E	1.98	1.98	2.01	2.00				
MINIMUM	VOLUME OF ICE BIN, FT3	V	339	169	724	362	205	102	422	211
	AREA OF PANEL, FT2	A	10	11	33	35	0	0	0	0
	LENGTH OF ICE BIN COIL, FT	L	0	246	0	482	0	163	0	314
	USAGE OF ELECTRICITY, KWH/YR	U	9555	9555	14512	14610	9660	9659	14170	14164
	EFFICIENCY (ANNUAL COP)	E	1.95	1.95	1.95	1.94	1.90	1.90	1.87	1.87

JACKSONVILLE, FLORIDA

GEOGRAPHICAL ZONE	= E	LATITUDE (DEG)	= 30.5	GROUND	AO = 68.69 F	AIR TEMP:	OUTDOOR INDOOR
JANUARY WIND (MPH)	= 9.0	LONGITUDE (DEG)	= 81.7	TEMPERATURE	BO = 14.07 F	WINTER	30 F 70 F
COOLING(TOTAL/SENS.)	= 1.24	ELEVATION (FT)	= 26.	CONSTANTS:	PO = 0.552 RAD	SUMMER	93 F 78 F

BUILDING DESIGN MONTHLY THERMAL LOADS

MONTH	R-40 INSULATION BIN HEAT LEAK COEFFICIENTS (32F)		UNGLAZED PANEL HEAT	DOMESTIC WATER HEAT	MEDIUM INSULATION				HIGH INSULATION			
					HOUSE 1 1200 FT2		HOUSE 2 2400 FT2		HOUSE 3 1200 FT2		HOUSE 4 2400 FT2	
(M)	TB(M)	SD(M)	PAN(M)	QHW(M)	QH(M)	QC(M)	QH(M)	QC(M)	QH(M)	QC(M)	QH(M)	QC(M)
	MBTU/FT2		MBTU/FT2	MBTU	MBTU	MBTU	MBTU	MBTU	MBTU	MBTU	MBTU	MBTU
JAN	1.094	0.565	85.15	1230	2350	520	6440	0	950	790	3240	1040
FEB	0.970	0.488	98.32	1100	1440	990	4280	1280	480	1440	1910	1890
MAR	1.128	0.550	118.61	1160	1150	1480	3710	2070	0	2030	1530	2710
APR	1.203	0.575	135.31	1030	0	2630	1300	3810	0	3440	0	4490
MAY	1.395	0.665	151.08	950	0	4720	0	6270	0	5470	0	7380
JUN	1.485	0.714	149.69	830	0	6100	0	8370	0	6400	0	9040
JUL	1.632	0.797	149.35	810	0	7620	0	11050	0	7430	0	10900
AUG	1.656	0.825	151.74	810	0	7730	0	11190	0	7390	0	10840
SEP	1.550	0.788	150.26	840	0	6470	0	8920	0	6440	0	9160
OCT	1.481	0.768	131.15	970	0	3650	0	4830	0	4140	0	5460
NOV	1.290	0.677	101.25	1040	610	1650	2230	2270	0	2080	1160	2720
DEC	1.189	0.624	80.43	1170	1890	590	5360	0	790	870	2820	1110
ANNUAL THERMAL LOADS (MBTU)				11940	7440	44150	23320	60060	2220	47920	10660	66740
DESIGN HOURLY THERMAL LOADS (BTU/HR)					19487	23167	37585	39637	13078	20567	24941	35854

CALCULATED ACES DESIGNS

ACES SIZE	SYSTEM DESIGN PARAMETERS		HOUSE 1 ICE MAKER	HOUSE 1 BRINE CHILLER	HOUSE 2 ICE MAKER	HOUSE 2 BRINE CHILLER	HOUSE 3 ICE MAKER	HOUSE 3 BRINE CHILLER	HOUSE 4 ICE MAKER	HOUSE 4 BRINE CHILLER
FULL	VOLUME OF ICE BIN, FT3	V	654	380	2297	1348				
	AREA OF PANEL, FT2	A	0	0	0	0				
	LENGTH OF ICE BIN COIL, FT	L	0	266	0	553				
	USAGE OF ELECTRICITY, KWH/YR	U	9010	9010	12732	12741				
	EFFICIENCY (ANNUAL COP)	E	2.07	2.07	2.19	2.19				
PARTIAL	VOLUME OF ICE BIN, FT3	V	492	272	1503	851				
	AREA OF PANEL, FT2	A	0	0	12	13				
	LENGTH OF ICE BIN COIL, FT	L	0	255	0	523				
	USAGE OF ELECTRICITY, KWH/YR	U	9316	9315	13626	13641				
	EFFICIENCY (ANNUAL COP)	E	2.00	2.00	2.05	2.05				
MINIMUM	VOLUME OF ICE BIN, FT3	V	331	165	710	355	202	101	414	207
	AREA OF PANEL, FT2	A	0	0	33	36	0	0	0	0
	LENGTH OF ICE BIN COIL, FT	L	0	239	0	468	0	158	0	305
	USAGE OF ELECTRICITY, KWH/YR	U	9357	9357	13896	13890	9543	9542	13637	13637
	EFFICIENCY (ANNUAL COP)	E	1.99	1.99	2.01	2.01	1.91	1.91	1.92	1.92

ATLANTA, GEORGIA

GEOGRAPHICAL ZONE	= D	LATITUDE (DEG)	= 33.6	GROUND	AO = 59.79 F	AIR TEMP:	OUTDOOR	INDOOR
JANUARY WIND (MPH)	= 11.0	LONGITUDE (DEG)	= 84.3	TEMPERATURE	BO = 19.09 F	WINTER	17 F	70 F
COOLING(TOTAL/SENS.)	= 1.17	ELEVATION (FT)	= 950.	CONSTANTS:	PO = 0.556 RAD	SUMMER	92 F	78 F

BUILDING DESIGN MONTHLY THERMAL LOADS

MONTH	R-40 INSULATION BIN HEAT LEAK COEFFICIENTS(32F)		UNGLAZED PANEL HEAT	DOMESTIC WATER HEAT	MEDIUM INSULATION				HIGH INSULATION			
					HOUSE 1 1200 FT2		HOUSE 2 2400 FT2		HOUSE 3 1200 FT2		HOUSE 4 2400 FT2	
(M)	TB(M) MBTU/FT2	SD(M) MBTU/FT2	PAN(M) MBTU/FT2	QHW(M) MBTU	QH(M) MBTU	QC(M) MBTU	QH(M) MBTU	QC(M) MBTU	QH(M) MBTU	QC(M) MBTU	QH(M) MBTU	QC(M) MBTU
JAN	0.667	0.358	50.20	1460	6940	0	16220	0	3090	0	8130	0
FEB	0.576	0.292	61.58	1310	5200	0	12450	0	2080	0	5810	0
MAR	0.711	0.337	84.16	1380	4470	0	11000	0	1680	410	5010	0
APR	0.839	0.384	114.06	1210	1920	1030	5520	1330	470	1610	2030	2270
MAY	1.073	0.492	130.98	1090	0	2580	1950	3630	0	3610	0	4670
JUN	1.222	0.572	131.24	940	0	3730	0	5330	0	5000	0	6570
JUL	1.396	0.672	140.58	900	0	5080	0	6580	0	5930	0	8000
AUG	1.428	0.711	143.88	900	0	5340	0	7310	0	5940	0	8090
SEP	1.312	0.674	124.36	950	0	3470	0	4760	0	4150	0	5400
OCT	1.192	0.633	106.71	1110	980	1430	3290	1970	0	1860	1540	2520
NOV	0.960	0.523	79.85	1220	2900	0	7570	0	1230	550	3910	0
DEC	0.797	0.439	55.69	1390	5570	0	13390	0	2480	0	6820	0
ANNUAL THERMAL LOADS (MBTU)				13860	27980	22660	71390	30910	11030	29060	33250	37520
DESIGN HOURLY THERMAL LOADS (BTU/HR)					30134	19196	58427	29939	18927	18840	36242	31363

CALCULATED ACES DESIGNS

ACES SIZE	SYSTEM DESIGN PARAMETERS		HOUSE 1 ICE MAKER	HOUSE 1 BRINE CHILLER	HOUSE 2 ICE MAKER	HOUSE 2 BRINE CHILLER	HOUSE 3 ICE MAKER	HOUSE 3 BRINE CHILLER	HOUSE 4 ICE MAKER	HOUSE 4 BRINE CHILLER
	VOLUME OF ICE BIN, FT3	V	4155	2444	9159	4507	1929	1133	4641	2721
	AREA OF PANEL, FT2	A	0	0	0	15	0	0	0	0
FULL	LENGTH OF ICE BIN COIL, FT	L	0	488	0	942	0	296	0	582
	USAGE OF ELECTRICITY, KWH/YR	U	6378	6000	10196	11229	6481	6494	9392	9101
	EFFICIENCY (ANNUAL COP)	E	2.96	3.15	3.34	3.03	2.44	2.43	2.64	2.72
	VOLUME OF ICE BIN, FT3	V	2466	1416	5398	2663	1175	672	2765	1582
	AREA OF PANEL, FT2	A	25	25	52	63	12	13	29	29
PARTIAL	LENGTH OF ICE BIN COIL, FT	L	0	458	0	885	0	278	0	546
	USAGE OF ELECTRICITY, KWH/YR	U	7305	7337	12480	12627	7059	7070	10615	10372
	EFFICIENCY (ANNUAL COP)	E	2.59	2.58	2.73	2.70	2.24	2.24	2.34	2.39
	VOLUME OF ICE BIN, FT3	V	778	389	1637	818	421	210	889	444
	AREA OF PANEL, FT2	A	60	63	128	135	32	34	69	74
MINIMUM	LENGTH OF ICE BIN COIL, FT	L	0	390	0	765	0	240	0	467
	USAGE OF ELECTRICITY, KWH/YR	U	8176	8168	14160	14147	7382	7506	11378	11362
	EFFICIENCY (ANNUAL COP)	E	2.31	2.31	2.40	2.41	2.14	2.11	2.18	2.18

AUGUSTA, GEORGIA

GEOGRAPHICAL ZONE	= D	LATITUDE (DEG)	= 33.4	GROUND	AO = 63.19 F	AIR TEMP:	OUTDOOR INDOOR
JANUARY WIND (MPH)	= 7.0	LONGITUDE (DEG)	= 82.0	TEMPERATURE	BO = 17.80 F	WINTER	20 F 70 F
COOLING(TOTAL/SENS.)	= 1.20	ELEVATION (FT)	= 136.	CONSTANTS:	PO = 0.513 RAD	SUMMER	95 F 78 F

BUILDING DESIGN MONTHLY THERMAL LOADS

MONTH	R-40 INSULATION BIN HEAT LEAK COEFFICIENTS(32F)		UNGLAZED PANEL HEAT	DOMESTIC WATER HEAT	MEDIUM INSULATION HOUSE 1 1200 FT2		MEDIUM INSULATION HOUSE 2 2400 FT2		HIGH INSULATION HOUSE 3 1200 FT2		HIGH INSULATION HOUSE 4 2400 FT2	
(M)	TB(M) MBTU/FT2	SD(M) MBTU/FT2	PAN(M) MBTU/FT2	QHW(M) MBTU	QH(M) MBTU	QC(M) MBTU	QH(M) MBTU	QC(M) MBTU	QH(M) MBTU	QC(M) MBTU	QH(M) MBTU	QC(M) MBTU
JAN	0.813	0.428	56.13	1380	4700	0	11520	0	1950	0	5570	0
FEB	0.716	0.360	64.75	1240	3510	0	8830	0	1310	470	4020	0
MAR	0.869	0.415	84.27	1290	3000	0	7820	0	1000	960	3420	1340
APR	0.986	0.459	106.81	1130	1220	1720	3890	2380	0	2400	1360	3290
MAY	1.213	0.565	128.57	1030	0	3370	1190	4910	0	4400	0	5860
JUN	1.342	0.635	119.80	880	0	5110	0	6980	0	5800	0	8030
JUL	1.504	0.730	128.22	850	0	6590	0	9200	0	6880	0	9810
AUG	1.526	0.762	118.64	860	0	6450	0	9010	0	6620	0	9350
SEP	1.404	0.721	113.21	910	0	4470	0	6130	0	4960	0	6670
OCT	1.293	0.682	86.13	1070	720	2150	2570	3020	0	2550	1260	3500
NOV	1.070	0.575	69.11	1170	2400	670	6360	0	1040	950	3380	1320
DEC	0.927	0.500	55.36	1320	4060	0	10120	0	1780	0	5150	0
ANNUAL THERMAL LOADS (MBTU)				13130	19610	30530	52300	41630	7080	35990	24160	49170
DESIGN HOURLY THERMAL LOADS (BTU/HR)					27173	21992	52609	35789	17440	20380	33359	34685

CALCULATED ACES DESIGNS

ACES SIZE	SYSTEM DESIGN PARAMETERS		HOUSE 1 ICE MAKER	HOUSE 1 BRINE CHILLER	HOUSE 2 ICE MAKER	HOUSE 2 BRINE CHILLER	HOUSE 3 ICE MAKER	HOUSE 3 BRINE CHILLER	HOUSE 4 ICE MAKER	HOUSE 4 BRINE CHILLER
	VOLUME OF ICE BIN, FT3	V	2767	1644	6384	3771	1101	645	2845	1680
	AREA OF PANEL, FT2	A	0	0	0	0	0	0	0	0
FULL	LENGTH OF ICE BIN COIL, FT	L	0	426	0	841	0	257	0	511
	USAGE OF ELECTRICITY, KWH/YR	U	7272	7039	11263	10561	7652	7493	11044	10747
	EFFICIENCY (ANNUAL COP)	E	2.55	2.63	2.78	2.97	2.15	2.20	2.29	2.36
	VOLUME OF ICE BIN, FT3	V	1665	962	3790	2184	705	400	1745	1001
	AREA OF PANEL, FT2	A	18	18	40	40	0	0	20	20
PARTIAL	LENGTH OF ICE BIN COIL, FT	L	0	399	0	788	0	243	0	480
	USAGE OF ELECTRICITY, KWH/YR	U	8199	8011	13033	12705	7992	8002	11871	11674
	EFFICIENCY (ANNUAL COP)	E	2.26	2.31	2.41	2.47	2.06	2.06	2.13	2.17
	VOLUME OF ICE BIN, FT3	V	563	281	1195	597	309	154	644	322
	AREA OF PANEL, FT2	A	41	44	90	95	23	25	49	52
MINIMUM	LENGTH OF ICE BIN COIL, FT	L	0	342	0	671	0	215	0	416
	USAGE OF ELECTRICITY, KWH/YR	U	8470	8679	14020	13996	8102	8046	12240	12229
	EFFICIENCY (ANNUAL COP)	E	2.19	2.14	2.24	2.24	2.03	2.05	2.07	2.07

MACON, GEORGIA

GEOGRAPHICAL ZONE	= D	LATITUDE (DEG)	= 32.6	GROUND	AO = 64.68 F	AIR TEMP:	OUTDOOR	INDOOR
JANUARY WIND (MPH)	= 9.0	LONGITUDE (DEG)	= 83.6	TEMPERATURE	BO = 16.75 F	WINTER	21 F	70 F
COOLING(TOTAL/SENS.)	= 1.20	ELEVATION (FT)	= 294.	CONSTANTS:	PO = 0.565 RAD	SUMMER	96 F	78 F

BUILDING DESIGN MONTHLY THERMAL LOADS

MONTH	R-40 INSULATION BIN HEAT LEAK COEFFICIENTS(32F)		UNGLAZED PANEL HEAT	DOMESTIC WATER HEAT	MEDIUM INSULATION HOUSE 1 1200 FT2		MEDIUM INSULATION HOUSE 2 2400 FT2		HIGH INSULATION HOUSE 3 1200 FT2		HIGH INSULATION HOUSE 4 2400 FT2	
(M)	TB(M) MBTU/FT2	SD(M) MBTU/FT2	PAN(M) MBTU/FT2	QHW(M) MBTU	QH(M) MBTU	QC(M) MBTU	QH(M) MBTU	QC(M) MBTU	QH(M) MBTU	QC(M) MBTU	QH(M) MBTU	QC(M) MBTU
JAN	0.895	0.469	60.65	1340	4380	0	10900	0	1830	0	5390	0
FEB	0.784	0.396	71.95	1200	3140	0	8100	0	1180	450	3720	0
MAR	0.930	0.449	95.85	1260	2500	550	6780	0	790	910	2930	1240
APR	1.032	0.485	123.21	1110	850	1760	3010	2450	0	2450	980	3320
MAY	1.247	0.584	134.12	1020	0	3610	0	5190	0	4630	0	6160
JUN	1.369	0.650	139.49	880	0	5230	0	6910	0	5920	0	8150
JUL	1.532	0.743	146.74	840	0	6580	0	9000	0	6860	0	9770
AUG	1.562	0.778	140.05	850	0	6720	0	9370	0	6790	0	9650
SEP	1.451	0.741	131.56	880	0	4720	0	6400	0	5120	0	6920
OCT	1.357	0.711	103.28	1030	0	2260	1730	3130	0	2670	870	3550
NOV	1.144	0.610	95.80	1120	1180	1300	3560	1710	440	1650	1780	2230
DEC	1.010	0.541	63.34	1270	3440	0	8870	0	1490	340	4540	0
ANNUAL THERMAL LOADS (MBTU)				12800	15490	32730	42950	44160	5730	37790	20210	50990
DESIGN HOURLY THERMAL LOADS (BTU/HR)					25793	23172	49883	38228	16864	21067	32238	36288

CALCULATED ACES DESIGNS

ACES SIZE	SYSTEM DESIGN PARAMETERS		HOUSE 1 ICE MAKER	HOUSE 1 BRINE CHILLER	HOUSE 2 ICE MAKER	HOUSE 2 BRINE CHILLER	HOUSE 3 ICE MAKER	HOUSE 3 BRINE CHILLER	HOUSE 4 ICE MAKER	HOUSE 4 BRINE CHILLER
	VOLUME OF ICE BIN, FT3	V	2200	1288	5101	2995	863	527	2475	1445
	AREA OF PANEL, FT2	A	0	0	0	0	0	0	0	0
FULL	LENGTH OF ICE BIN COIL, FT	L	0	395	0	781	0	244	0	487
	USAGE OF ELECTRICITY, KWH/YR	U	7404	7210	11081	10769	7754	7758	11100	10872
	EFFICIENCY (ANNUAL COP)	E	2.41	2.48	2.64	2.72	2.13	2.13	2.22	2.26
	VOLUME OF ICE BIN, FT3	V	1365	776	3117	1781	578	337	1549	878
	AREA OF PANEL, FT2	A	13	14	33	33	0	0	17	18
PARTIAL	LENGTH OF ICE BIN COIL, FT	L	0	371	0	734	0	231	0	459
	USAGE OF ELECTRICITY, KWH/YR	U	8087	8095	12579	12340	8095	8102	11676	11684
	EFFICIENCY (ANNUAL COP)	E	2.21	2.21	2.33	2.37	2.04	2.04	2.11	2.11
	VOLUME OF ICE BIN, FT3	V	529	264	1133	566	293	146	623	311
	AREA OF PANEL, FT2	A	33	35	73	78	15	17	40	43
MINIMUM	LENGTH OF ICE BIN COIL, FT	L	0	324	0	636	0	208	0	402
	USAGE OF ELECTRICITY, KWH/YR	U	8428	8422	13459	13447	8230	8231	12206	12196
	EFFICIENCY (ANNUAL COP)	E	2.12	2.12	2.17	2.18	2.00	2.00	2.02	2.02

BOISE, IDAHO

GEOGRAPHICAL ZONE	= N	LATITUDE (DEG)	= 43.6	GROUND	AO = 50.74 F	AIR TEMP:	OUTDOOR	INDOOR
JANUARY WIND (MPH)	= 9.0	LONGITUDE (DEG)	= 116.2	TEMPERATURE	BO = 21.33 F	WINTER	3 F	70 F
COOLING(TOTAL/SENS.)	= 1.00	ELEVATION (FT)	= 2838.	CONSTANTS:	PO = 0.579 RAD	SUMMER	94 F	78 F

BUILDING DESIGN MONTHLY THERMAL LOADS

MONTH	R-40 INSULATION BIN HEAT LEAK COEFFICIENTS(32F)		UNGLAZED PANEL HEAT	DOMESTIC WATER HEAT	MEDIUM INSULATION HOUSE 1 1200 FT2		MEDIUM INSULATION HOUSE 2 2400 FT2		HIGH INSULATION HOUSE 3 1200 FT2		HIGH INSULATION HOUSE 4 2400 FT2	
(M)	TB(M)	SD(M)	PAN(M)	QHW(M)	QH(M)	QC(M)	QH(M)	QC(M)	QH(M)	QC(M)	QH(M)	QC(M)
	MBTU/FT2		MBTU/FT2	MBTU	MBTU	MBTU	MBTU	MBTU	MBTU	MBTU	MBTU	MBTU
JAN	0.292	0.174	20.65	1570	11610	0	25460	0	5410	0	13130	0
FEB	0.230	0.121	34.07	1440	9020	0	20210	0	3750	0	9440	0
MAR	0.330	0.145	58.20	1560	7760	0	17960	0	3080	0	7940	0
APR	0.485	0.204	78.78	1420	4970	0	11830	0	1780	440	5160	0
MAY	0.731	0.316	103.55	1330	3060	950	7860	0	840	1440	3110	2130
JUN	0.914	0.413	120.41	1170	1140	2260	3680	3340	0	2980	1140	4360
JUL	1.097	0.519	152.93	1120	0	4130	1260	6330	0	4900	0	7140
AUG	1.139	0.564	136.52	1090	0	3610	1410	5520	0	4280	0	6200
SEP	1.028	0.534	116.71	1090	1130	2010	3640	3000	0	2490	1490	3660
OCT	0.884	0.482	81.40	1220	3280	0	8380	0	1270	650	4140	940
NOV	0.639	0.368	43.23	1310	6710	0	15730	0	3010	0	7920	0
DEC	0.441	0.266	22.20	1480	10350	0	22990	0	4830	0	12040	0
ANNUAL THERMAL LOADS (MBTU)				15800	59030	12960	140410	18190	23970	17180	65510	24430
DESIGN HOURLY THERMAL LOADS (BTU/HR)					41233	15305	80139	24618	25516	17162	48994	28401

CALCULATED ACES DESIGNS

ACES SIZE	SYSTEM DESIGN PARAMETERS		HOUSE 1 ICE MAKER	HOUSE 1 BRINE CHILLER	HOUSE 2 ICE MAKER	HOUSE 2 BRINE CHILLER	HOUSE 3 ICE MAKER	HOUSE 3 BRINE CHILLER	HOUSE 4 ICE MAKER	HOUSE 4 BRINE CHILLER
	VOLUME OF ICE BIN, FT3	V	2891	1479	3479	1785	4072	2204	5891	3023
	AREA OF PANEL, FT2	A	138	146	426	457	0	0	58	70
FULL	LENGTH OF ICE BIN COIL, FT	L	0	607	0	1113	0	417	0	770
	USAGE OF ELECTRICITY, KWH/YR	U	8996	9010	18400	18387	5007	5266	10269	10312
	EFFICIENCY (ANNUAL COP)	E	2.86	2.85	2.78	2.78	3.33	3.17	3.02	3.00
	VOLUME OF ICE BIN, FT3	V	2055	1044	2991	1518	2359	1264	3626	1851
	AREA OF PANEL, FT2	A	176	188	477	507	38	40	133	142
PARTIAL	LENGTH OF ICE BIN COIL, FT	L	0	582	0	1091	0	390	0	726
	USAGE OF ELECTRICITY, KWH/YR	U	9342	9315	18580	18562	6009	6031	11121	11140
	EFFICIENCY (ANNUAL COP)	E	2.75	2.76	2.75	2.75	2.78	2.77	2.79	2.78
	VOLUME OF ICE BIN, FT3	V	1220	610	2503	1251	647	323	1361	680
	AREA OF PANEL, FT2	A	254	269	528	557	135	143	289	305
MINIMUM	LENGTH OF ICE BIN COIL, FT	L	0	544	0	1064	0	330	0	641
	USAGE OF ELECTRICITY, KWH/YR	U	9662	9653	18709	18865	6590	6800	11933	12270
	EFFICIENCY (ANNUAL COP)	E	2.66	2.66	2.73	2.71	2.53	2.45	2.60	2.52

IDAHO FALLS, IDAHO

GEOGRAPHICAL ZONE = K	LATITUDE (DEG) = 43.5	GROUND	AO = 43.57 F	AIR TEMP:	OUTDOOR	INDOOR
JANUARY WIND (MPH) = 6.0	LONGITUDE (DEG) = 112.1	TEMPERATURE	BO = 23.21 F	WINTER	-11 F	70 F
COOLING(TOTAL/SENS.) = 1.00	ELEVATION (FT) = 4741.	CONSTANTS:	PO = 0.581 RAD	SUMMER	87 F	78 F

BUILDING DESIGN MONTHLY THERMAL LOADS

MONTH	R-40 INSULATION BIN HEAT LEAK COEFFICIENTS(32F)		UNGLAZED PANEL HEAT	DOMESTIC WATER HEAT	MEDIUM INSULATION HOUSE 1 1200 FT2		MEDIUM INSULATION HOUSE 2 2400 FT2		HIGH INSULATION HOUSE 3 1200 FT2		HIGH INSULATION HOUSE 4 2400 FT2	
(M)	TB(M)	SD(M)	PAN(M)	QHW(M)	QH(M)	QC(M)	QH(M)	QC(M)	QH(M)	QC(M)	QH(M)	QC(M)
	MBTU/FT2		MBTU/FT2	MBTU	MBTU	MBTU	MBTU	MBTU	MBTU	MBTU	MBTU	MBTU
JAN	-0.010	0.026	10.97	1520	15530	0	33070	0	7620	0	17400	0
FEB	-0.046	-0.017	19.97	1420	12530	0	27040	0	5600	0	13200	0
MAR	0.031	-0.006	36.48	1600	11620	0	25610	0	4870	0	11740	0
APR	0.210	0.063	68.64	1550	6920	0	15930	0	2620	0	6860	0
MAY	0.467	0.179	87.53	1560	4590	0	11070	0	1420	1170	4430	1740
JUN	0.677	0.290	100.31	1450	2720	1320	7170	1810	620	1970	2590	2950
JUL	0.866	0.401	122.98	1420	1100	2780	3750	4200	0	3610	0	5370
AUG	0.911	0.450	117.70	1370	1250	2590	4050	3890	0	3290	1280	4940
SEP	0.802	0.422	94.66	1290	2490	1560	6650	2240	730	2070	2830	3170
OCT	0.634	0.361	67.41	1350	5300	0	12460	0	2260	540	6190	0
NOV	0.379	0.242	33.61	1340	9010	0	20250	0	4050	0	10020	0
DEC	0.152	0.126	8.39	1450	14500	0	31020	0	7300	0	16780	0
ANNUAL THERMAL LOADS (MBTU)				17320	87560	8250	198070	12140	37090	12650	93320	18170
DESIGN HOURLY THERMAL LOADS (BTU/HR)					52059	9690	101304	13698	32429	14257	62394	22872

CALCULATED ACES DESIGNS

ACES SIZE	SYSTEM DESIGN PARAMETERS		HOUSE 1 ICE MAKER	HOUSE 1 BRINE CHILLER	HOUSE 2 ICE MAKER	HOUSE 2 BRINE CHILLER	HOUSE 3 ICE MAKER	HOUSE 3 BRINE CHILLER	HOUSE 4 ICE MAKER	HOUSE 4 BRINE CHILLER
	VOLUME OF ICE BIN, FT3	V					2353	1231	3121	1637
	AREA OF PANEL, FT2	A					149	161	549	580
FULL	LENGTH OF ICE BIN COIL, FT	L					0	481	0	884
	USAGE OF ELECTRICITY, KWH/YR	U					6518	6530	12902	12976
	EFFICIENCY (ANNUAL COP)	E					3.01	3.01	2.93	2.91
	VOLUME OF ICE BIN, FT3	V					1600	827	2436	1256
	AREA OF PANEL, FT2	A					242	264	692	730
PARTIAL	LENGTH OF ICE BIN COIL, FT	L					0	458	0	856
	USAGE OF ELECTRICITY, KWH/YR	U					6558	6808	13317	13311
	EFFICIENCY (ANNUAL COP)	E					3.00	2.89	2.83	2.84
	VOLUME OF ICE BIN, FT3	V	1579	789	3202	1601	847	423	1752	876
	AREA OF PANEL, FT2	A	* 742	* 777	* 1511	* 1582	404	423	842	881
MINIMUM	LENGTH OF ICE BIN COIL, FT	L	0	689	0	1348	0	421	0	818
	USAGE OF ELECTRICITY, KWH/YR	U	12005	12001	24545	24537	7229	6981	13572	13565
	EFFICIENCY (ANNUAL COP)	E	2.76	2.76	2.72	2.72	2.72	2.81	2.78	2.78

*UNGLAZED PANEL EXCEEDS A PRACTICAL SIZE, AN ALTERNATIVE SUPPLEMENTARY HEAT SOURCE SHOULD BE USED IN THIS DESIGN.

CHICAGO, ILLINOIS

GEOGRAPHICAL ZONE	= G	LATITUDE (DEG)	= 42.0	GROUND	AO = 48.97 F	AIR TEMP:	OUTDOOR INDOOR
JANUARY WIND (MPH)	= 11.0	LONGITUDE (DEG)	= 87.9	TEMPERATURE	BO = 24.47 F	WINTER	-8 F 70 F
COOLING(TOTAL/SENS.)	= 1.12	ELEVATION (FT)	= 658.	CONSTANTS:	PO = 0.623 RAD	SUMMER	92 F 78 F

BUILDING DESIGN MONTHLY THERMAL LOADS

MONTH	R-40 INSULATION BIN HEAT LEAK COEFFICIENTS(32F)		UNGLAZED PANEL HEAT	DOMESTIC WATER HEAT	MEDIUM INSULATION HOUSE 1 1200 FT2		HOUSE 2 2400 FT2		HIGH INSULATION HOUSE 3 1200 FT2		HOUSE 4 2400 FT2	
(M)	TB(M)	SD(M)	PAN(M)	QHW(M)	QH(M)	QC(M)	QH(M)	QC(M)	QH(M)	QC(M)	QH(M)	QC(M)
	MBTU/FT2		MBTU/FT2	MBTU	MBTU	MBTU	MBTU	MBTU	MBTU	MBTU	MBTU	MBTU
JAN	0.175	0.122	7.94	1540	13640	0	31010	0	7880	0	17170	0
FEB	0.111	0.064	12.71	1440	11360	0	26530	0	6200	0	13890	0
MAR	0.199	0.079	29.79	1590	9920	0	24420	0	4920	0	11700	0
APR	0.375	0.144	64.62	1490	5230	0	14480	0	2160	430	5850	0
MAY	0.648	0.267	102.12	1430	2500	970	8000	0	800	1400	2840	1790
JUN	0.868	0.382	118.18	1270	590	2540	2840	2690	0	3380	0	4180
JUL	1.081	0.504	127.41	1210	0	3730	980	4370	0	4700	0	5780
AUG	1.140	0.562	120.59	1150	0	3260	1080	3960	0	4120	0	5170
SEP	1.028	0.534	100.44	1120	920	1570	3360	1630	0	1960	1290	2470
OCT	0.865	0.478	73.39	1210	2710	0	7690	0	1160	680	3510	790
NOV	0.592	0.351	32.55	1270	7320	0	17740	0	3890	0	9340	0
DEC	0.356	0.231	10.12	1440	12040	0	27430	0	6980	0	15400	0
ANNUAL THERMAL LOADS (MBTU)				16160	66230	12070	165560	12650	33990	16670	80990	20180
DESIGN HOURLY THERMAL LOADS (BTU/HR)					45999	15678	93905	19121	31526	17306	58844	25724

CALCULATED ACES DESIGNS

ACES SIZE	SYSTEM DESIGN PARAMETERS		HOUSE 1 ICE MAKER	HOUSE 1 BRINE CHILLER	HOUSE 2 ICE MAKER	HOUSE 2 BRINE CHILLER	HOUSE 3 ICE MAKER	HOUSE 3 BRINE CHILLER	HOUSE 4 ICE MAKER	HOUSE 4 BRINE CHILLER
	VOLUME OF ICE BIN, FT3	V					4082	2062	4874	2497
	AREA OF PANEL, FT2	A					69	87	410	444
FULL	LENGTH OF ICE BIN COIL, FT	L					0	498	0	884
	USAGE OF ELECTRICITY, KWH/YR	U					6234	6139	11523	11567
	EFFICIENCY (ANNUAL COP)	E					3.14	3.19	2.98	2.97
	VOLUME OF ICE BIN, FT3	V					2477	1249	3303	1681
	AREA OF PANEL, FT2	A					198	221	603	648
PARTIAL	LENGTH OF ICE BIN COIL, FT	L					0	470	0	843
	USAGE OF ELECTRICITY, KWH/YR	U					6922	6915	12249	11928
	EFFICIENCY (ANNUAL COP)	E					2.83	2.83	2.81	2.88
	VOLUME OF ICE BIN, FT3	V	1405	702	3014	1507	872	436	1732	866
	AREA OF PANEL, FT2	A	* 735	* 775	* 1579	* 1664	* 457	* 482	915	965
MINIMUM	LENGTH OF ICE BIN COIL, FT	L	0	609	0	1252	0	412	0	776
	USAGE OF ELECTRICITY, KWH/YR	U	10233	10226	20828	20818	7660	7655	13028	13020
	EFFICIENCY (ANNUAL COP)	E	2.70	2.71	2.73	2.74	2.56	2.56	2.64	2.64

*UNGLAZED PANEL EXCEEDS A PRACTICAL SIZE, AN ALTERNATIVE SUPPLEMENTARY HEAT SOURCE SHOULD BE USED IN THIS DESIGN.

EAST ST. LOUIS, ILLINOIS

GEOGRAPHICAL ZONE	= G	LATITUDE (DEG)	= 38.5	GROUND	AO = 54.92 F	AIR TEMP:	OUTDOOR INDOOR
JANUARY WIND (MPH)	= 10.0	LONGITUDE (DEG)	= 89.8	TEMPERATURE	BO = 24.40 F	WINTER	1 F 70 F
COOLING(TOTAL/SENS.)	= 1.15	ELEVATION (FT)	= 453.	CONSTANTS:	PO = 0.583 RAD	SUMMER	95 F 78 F

BUILDING DESIGN MONTHLY THERMAL LOADS

MONTH	R-40 INSULATION BIN HEAT LEAK COEFFICIENTS(32F)		UNGLAZED PANEL HEAT	DOMESTIC WATER HEAT	MEDIUM INSULATION HOUSE 1 1200 FT2		MEDIUM INSULATION HOUSE 2 2400 FT2		HIGH INSULATION HOUSE 3 1200 FT2		HIGH INSULATION HOUSE 4 2400 FT2	
(M)	TB(M) MBTU/FT2	SD(M) MBTU/FT2	PAN(M) MBTU/FT2	QHW(M) MBTU	QH(M) MBTU	QC(M) MBTU	QH(M) MBTU	QC(M) MBTU	QH(M) MBTU	QC(M) MBTU	QH(M) MBTU	QC(M) MBTU
JAN	0.390	0.228	22.78	1600	10770	0	25120	0	5960	0	13410	0
FEB	0.313	0.163	32.19	1450	8330	0	20320	0	4290	0	10040	0
MAR	0.432	0.194	58.09	1530	6730	0	17430	0	3190	0	7900	0
APR	0.607	0.259	95.92	1330	2800	720	8580	0	1020	1050	3230	1360
MAY	0.889	0.388	128.07	1200	840	2350	3690	2590	0	3060	970	3880
JUN	1.098	0.498	129.10	1000	0	3960	0	4870	0	4830	0	6060
JUL	1.310	0.621	133.13	940	0	5600	0	6800	0	6120	0	8220
AUG	1.359	0.673	132.79	930	0	5500	0	6780	0	5820	0	7840
SEP	1.231	0.637	119.22	970	0	3430	1170	4300	0	3770	0	4950
OCT	1.068	0.580	93.07	1160	1510	1290	4590	1450	610	1530	2130	2030
NOV	0.787	0.448	57.41	1290	4640	0	11770	0	2370	0	6010	0
DEC	0.561	0.333	27.59	1500	9040	0	21290	0	4980	0	11460	0
ANNUAL THERMAL LOADS (MBTU)				14900	44660	22850	113960	26790	22420	26180	55150	34340
DESIGN HOURLY THERMAL LOADS (BTU/HR)					39358	21476	79904	29816	26996	20330	50163	32411

CALCULATED ACES DESIGNS

ACES SIZE	SYSTEM DESIGN PARAMETERS		HOUSE 1 ICE MAKER	HOUSE 1 BRINE CHILLER	HOUSE 2 ICE MAKER	HOUSE 2 BRINE CHILLER	HOUSE 3 ICE MAKER	HOUSE 3 BRINE CHILLER	HOUSE 4 ICE MAKER	HOUSE 4 BRINE CHILLER
	VOLUME OF ICE BIN, FT3	V	6673	3314	7153	3568	3772	2167	7893	4530
	AREA OF PANEL, FT2	A	0	14	185	213	0	0	0	0
FULL	LENGTH OF ICE BIN COIL, FT	L	0	641	0	1208	0	437	0	824
	USAGE OF ELECTRICITY, KWH/YR	U	7183	7674	15875	15917	6563	6345	9759	9303
	EFFICIENCY (ANNUAL COP)	E	3.36	3.15	2.87	2.87	2.83	2.93	3.13	3.29
	VOLUME OF ICE BIN, FT3	V	3909	1943	4814	2403	2236	1259	4642	2612
	AREA OF PANEL, FT2	A	64	76	295	321	41	40	79	78
PARTIAL	LENGTH OF ICE BIN COIL, FT	L	0	602	0	1152	0	410	0	772
	USAGE OF ELECTRICITY, KWH/YR	U	8613	8655	16643	16656	7456	7475	11371	11414
	EFFICIENCY (ANNUAL COP)	E	2.80	2.79	2.74	2.74	2.50	2.49	2.69	2.68
	VOLUME OF ICE BIN, FT3	V	1145	572	2474	1237	700	350	1390	695
	AREA OF PANEL, FT2	A	195	207	424	450	119	126	239	254
MINIMUM	LENGTH OF ICE BIN COIL, FT	L	0	518	0	1060	0	350	0	656
	USAGE OF ELECTRICITY, KWH/YR	U	9880	9870	17636	17881	8202	8195	12899	12886
	EFFICIENCY (ANNUAL COP)	E	2.44	2.45	2.59	2.55	2.27	2.27	2.37	2.37

URBANA, ILLINOIS

GEOGRAPHICAL ZONE	= G	LATITUDE (DEG)	= 40.3	GROUND	AO = 50.80 F	AIR TEMP:	OUTDOOR	INDOOR
JANUARY WIND (MPH)	= 13.0	LONGITUDE (DEG)	= 88.1	TEMPERATURE	BO = 25.98 F	WINTER	-4 F	70 F
COOLING(TOTAL/SENS.)	= 1.12	ELEVATION (FT)	= 753.	CONSTANTS:	PO = 0.599 RAD	SUMMER	92 F	78 F

BUILDING DESIGN MONTHLY THERMAL LOADS

MONTH	R-40 INSULATION BIN HEAT LEAK COEFFICIENTS(32F)		UNGLAZED PANEL HEAT	DOMESTIC WATER HEAT	MEDIUM INSULATION				HIGH INSULATION			
					HOUSE 1 1200 FT2		HOUSE 2 2400 FT2		HOUSE 3 1200 FT2		HOUSE 4 2400 FT2	
(M)	TB(M) MBTU/FT2	SD(M) MBTU/FT2	PAN(M) MBTU/FT2	QHW(M) MBTU	QH(M) MBTU	QC(M) MBTU	QH(M) MBTU	QC(M) MBTU	QH(M) MBTU	QC(M) MBTU	QH(M) MBTU	QC(M) MBTU
JAN	0.210	0.141	13.04	1540	13790	0	31280	0	8070	0	17520	0
FEB	0.144	0.080	20.50	1440	10960	0	25780	0	5990	0	13480	0
MAR	0.247	0.100	45.95	1580	8950	0	22390	0	4450	0	10620	0
APR	0.437	0.172	89.36	1460	4290	0	12200	0	1760	620	4910	0
MAY	0.730	0.304	129.09	1380	1530	1710	5690	1620	0	2320	1720	3000
JUN	0.960	0.425	137.56	1210	0	3280	1860	3870	0	4110	0	5190
JUL	1.182	0.554	142.14	1140	0	4200	0	5310	0	5170	0	6690
AUG	1.238	0.612	134.28	1090	0	4470	0	5500	0	5050	0	6610
SEP	1.113	0.579	125.01	1060	540	2680	2100	3240	0	3070	810	3990
OCT	0.936	0.517	95.43	1180	2270	840	6540	0	980	1070	3080	1390
NOV	0.644	0.380	48.73	1260	6500	0	15980	0	3480	0	8430	0
DEC	0.396	0.254	18.81	1430	11600	0	26590	0	6720	0	14900	0
ANNUAL THERMAL LOADS (MBTU)				15770	60430	17180	150410	19540	31450	21410	75470	26870
DESIGN HOURLY THERMAL LOADS (BTU/HR)					43448	18726	88859	24019	29579	18823	55199	29033

CALCULATED ACES DESIGNS

ACES SIZE	SYSTEM DESIGN PARAMETERS		HOUSE 1 ICE MAKER	HOUSE 1 BRINE CHILLER	HOUSE 2 ICE MAKER	HOUSE 2 BRINE CHILLER	HOUSE 3 ICE MAKER	HOUSE 3 BRINE CHILLER	HOUSE 4 ICE MAKER	HOUSE 4 BRINE CHILLER
	VOLUME OF ICE BIN, FT3	V	4244	2136	4613	2350	5317	3013	7380	3687
	AREA OF PANEL, FT2	A	160	185	699	736	0	0	102	126
FULL	LENGTH OF ICE BIN COIL, FT	L	0	664	0	1261	0	492	0	875
	USAGE OF ELECTRICITY, KWH/YR	U	9268	9260	19480	19489	6080	5831	11332	11405
	EFFICIENCY (ANNUAL COP)	E	2.95	2.95	2.79	2.79	3.31	3.45	3.05	3.03
	VOLUME OF ICE BIN, FT3	V	2832	1423	3826	1934	3104	1729	4572	2285
	AREA OF PANEL, FT2	A	269	289	765	798	71	69	246	277
PARTIAL	LENGTH OF ICE BIN COIL, FT	L	0	633	0	1231	0	461	0	827
	USAGE OF ELECTRICITY, KWH/YR	U	9744	9919	19909	19901	7107	7161	12358	12371
	EFFICIENCY (ANNUAL COP)	E	2.81	2.76	2.73	2.73	2.83	2.81	2.80	2.80
	VOLUME OF ICE BIN, FT3	V	1420	710	3039	1519	890	445	1765	882
	AREA OF PANEL, FT2	A	396	* 423	854	909	247	264	496	528
MINIMUM	LENGTH OF ICE BIN COIL, FT	L	0	580	0	1194	0	391	0	735
	USAGE OF ELECTRICITY, KWH/YR	U	10497	10487	20088	20277	8252	8245	13748	13737
	EFFICIENCY (ANNUAL COP)	E	2.61	2.61	2.71	2.68	2.44	2.44	2.52	2.52

*UNGLAZED PANEL EXCEEDS A PRACTICAL SIZE, AN ALTERNATIVE SUPPLEMENTARY HEAT SOURCE SHOULD BE USED IN THIS DESIGN.

FORT WAYNE, INDIANA

GEOGRAPHICAL ZONE = G	LATITUDE (DEG) = 41.0	GROUND AO = 50.56 F	AIR TEMP:	OUTDOOR	INDOOR
JANUARY WIND (MPH) = 11.0	LONGITUDE (DEG) = 85.2	TEMPERATURE BO = 24.28 F	WINTER	-4 F	70 F
COOLING(TOTAL/SENS.) = 1.10	ELEVATION (FT) = 791.	CONSTANTS: PO = 0.608 RAD	SUMMER	90 F	78 F

BUILDING DESIGN MONTHLY THERMAL LOADS

MONTH	R-40 INSULATION BIN HEAT LEAK COEFFICIENTS(32F)		UNGLAZED PANEL HEAT	DOMESTIC WATER HEAT	MEDIUM INSULATION HOUSE 1 1200 FT2		MEDIUM INSULATION HOUSE 2 2400 FT2		HIGH INSULATION HOUSE 3 1200 FT2		HIGH INSULATION HOUSE 4 2400 FT2	
(M)	TB(M) MBTU/FT2	SD(M) MBTU/FT2	PAN(M) MBTU/FT2	QHW(M) MBTU	QH(M) MBTU	QC(M) MBTU	QH(M) MBTU	QC(M) MBTU	QH(M) MBTU	QC(M) MBTU	QH(M) MBTU	QC(M) MBTU
JAN	0.235	0.151	12.21	1550	12720	0	29180	0	7220	0	15930	0
FEB	0.168	0.092	21.62	1440	10000	0	23890	0	5220	0	12020	0
MAR	0.265	0.111	42.33	1580	8810	0	22050	0	4330	0	10340	0
APR	0.440	0.177	78.53	1450	4490	0	12660	0	1840	630	5080	0
MAY	0.714	0.301	111.78	1380	2070	1290	6890	0	620	1760	2370	2330
JUN	0.929	0.413	127.05	1210	0	3050	2230	3550	0	3830	0	4830
JUL	1.140	0.535	133.28	1140	0	4080	0	5080	0	5010	0	6460
AUG	1.194	0.590	129.56	1090	0	4100	0	5050	0	4730	0	6150
SEP	1.078	0.560	116.44	1070	670	2520	2480	2980	0	2940	960	3790
OCT	0.916	0.503	79.43	1190	2680	640	7400	0	1210	850	3550	1070
NOV	0.642	0.376	39.57	1270	6740	0	16480	0	3560	0	8650	0
DEC	0.411	0.258	20.61	1450	10580	0	24640	0	5890	0	13360	0
ANNUAL THERMAL LOADS (MBTU)				15820	58760	15680	147900	16660	29890	19750	72260	24630
DESIGN HOURLY THERMAL LOADS (BTU/HR)					43290	17195	88405	21065	29545	17881	55102	27001

CALCULATED ACES DESIGNS

ACES SIZE	SYSTEM DESIGN PARAMETERS		HOUSE 1 ICE MAKER	HOUSE 1 BRINE CHILLER	HOUSE 2 ICE MAKER	HOUSE 2 BRINE CHILLER	HOUSE 3 ICE MAKER	HOUSE 3 BRINE CHILLER	HOUSE 4 ICE MAKER	HOUSE 4 BRINE CHILLER
FULL	VOLUME OF ICE BIN, FT3	V	3818	1940	4004	2050	4953	2624	6375	3237
	AREA OF PANEL, FT2	A	160	175	651	681	0	0	117	133
	LENGTH OF ICE BIN COIL, FT	L	0	655	0	1234	0	484	0	861
	USAGE OF ELECTRICITY, KWH/YR	U	9018	9035	19224	19240	5785	6061	10995	10784
	EFFICIENCY (ANNUAL COP)	E	2.93	2.93	2.75	2.75	3.31	3.16	3.00	3.06
PARTIAL	VOLUME OF ICE BIN, FT3	V	2570	1300	3425	1736	2883	1515	3997	2023
	AREA OF PANEL, FT2	A	246	260	699	740	67	72	236	254
	LENGTH OF ICE BIN COIL, FT	L	0	624	0	1209	0	454	0	814
	USAGE OF ELECTRICITY, KWH/YR	U	9512	9507	19561	19541	6807	6895	11907	11931
	EFFICIENCY (ANNUAL COP)	E	2.78	2.78	2.70	2.70	2.82	2.78	2.77	2.77
MINIMUM	VOLUME OF ICE BIN, FT3	V	1321	660	2846	1423	812	406	1619	809
	AREA OF PANEL, FT2	A	367	408	797	883	224	250	452	501
	LENGTH OF ICE BIN COIL, FT	L	0	573	0	1179	0	386	0	726
	USAGE OF ELECTRICITY, KWH/YR	U	9795	10174	19696	19655	7785	7772	13025	13001
	EFFICIENCY (ANNUAL COP)	E	2.70	2.60	2.68	2.69	2.46	2.47	2.54	2.54

INDIANAPOLIS, INDIANA

GEOGRAPHICAL ZONE	= G	LATITUDE (DEG)	= 39.7	GROUND	AO = 52.49 F	AIR TEMP:	OUTDOOR	INDOOR
JANUARY WIND (MPH)	= 12.0	LONGITUDE (DEG)	= 86.3	TEMPERATURE	BO = 23.64 F	WINTER	-2 F	70 F
COOLING(TOTAL/SENS.)	= 1.13	ELEVATION (FT)	= 792.	CONSTANTS:	PO = 0.591 RAD	SUMMER	90 F	78 F

BUILDING DESIGN MONTHLY THERMAL LOADS

MONTH	R-40 INSULATION BIN HEAT LEAK COEFFICIENTS(32F)		UNGLAZED PANEL HEAT	DOMESTIC WATER HEAT	MEDIUM INSULATION HOUSE 1 1200 FT2		MEDIUM INSULATION HOUSE 2 2400 FT2		HIGH INSULATION HOUSE 3 1200 FT2		HIGH INSULATION HOUSE 4 2400 FT2	
(M)	TB(M)	SD(M)	PAN(M)	QHW(M)	QH(M)	QC(M)	QH(M)	QC(M)	QH(M)	QC(M)	QH(M)	QC(M)
	MBTU/FT2		MBTU/FT2	MBTU	MBTU	MBTU	MBTU	MBTU	MBTU	MBTU	MBTU	MBTU
JAN	0.315	0.190	18.79	1580	11550	0	26840	0	6450	0	14480	0
FEB	0.245	0.129	27.82	1450	8970	0	21760	0	4630	0	10820	0
MAR	0.352	0.155	51.08	1560	7790	0	19780	0	3780	0	9200	0
APR	0.522	0.219	90.91	1390	3720	0	10830	0	1490	770	4290	980
MAY	0.794	0.342	117.24	1290	1610	1490	5760	1380	450	2010	1870	2590
JUN	0.999	0.450	130.71	1110	0	3410	1550	4040	0	4270	0	5360
JUL	1.203	0.568	136.30	1040	0	4460	0	5660	0	5460	0	7100
AUG	1.253	0.620	133.97	1010	0	4480	0	5470	0	5090	0	6640
SEP	1.133	0.587	121.67	1030	0	2870	1740	3510	0	3290	0	4250
OCT	0.974	0.532	92.24	1180	2280	870	6430	0	1010	1090	3110	1430
NOV	0.704	0.405	47.46	1290	6080	0	14950	0	3220	0	7860	0
DEC	0.483	0.292	23.94	1480	9800	0	22980	0	5420	0	12420	0
ANNUAL THERMAL LOADS (MBTU)				15410	51800	17580	132620	20060	26450	21980	64050	28350
DESIGN HOURLY THERMAL LOADS (BTU/HR)					41591	18068	84648	22704	28493	18347	53038	28171

CALCULATED ACES DESIGNS

ACES SIZE	SYSTEM DESIGN PARAMETERS		HOUSE 1 ICE MAKER	HOUSE 1 BRINE CHILLER	HOUSE 2 ICE MAKER	HOUSE 2 BRINE CHILLER	HOUSE 3 ICE MAKER	HOUSE 3 BRINE CHILLER	HOUSE 4 ICE MAKER	HOUSE 4 BRINE CHILLER
	VOLUME OF ICE BIN, FT3	V	4571	2307	5081	2582	4406	2521	7822	3878
	AREA OF PANEL, FT2	A	76	88	383	405	0	0	24	50
FULL	LENGTH OF ICE BIN COIL, FT	L	0	645	0	1222	0	467	0	850
	USAGE OF ELECTRICITY, KWH/YR	U	8417	8263	17608	17649	6028	5671	10284	10273
	EFFICIENCY (ANNUAL COP)	E	2.95	3.01	2.80	2.79	3.10	3.30	3.07	3.07
	VOLUME OF ICE BIN, FT3	V	2894	1457	3856	1949	2575	1447	4654	2311
	AREA OF PANEL, FT2	A	142	155	450	476	49	48	117	136
PARTIAL	LENGTH OF ICE BIN COIL, FT	L	0	610	0	1180	0	437	0	799
	USAGE OF ELECTRICITY, KWH/YR	U	9118	9135	18139	18124	7030	6836	11383	11481
	EFFICIENCY (ANNUAL COP)	E	2.72	2.72	2.72	2.72	2.66	2.74	2.77	2.75
	VOLUME OF ICE BIN, FT3	V	1216	608	2632	1316	744	372	1487	743
	AREA OF PANEL, FT2	A	250	266	546	578	152	162	308	327
MINIMUM	LENGTH OF ICE BIN COIL, FT	L	0	548	0	1124	0	370	0	695
	USAGE OF ELECTRICITY, KWH/YR	U	9700	9853	18694	18674	7838	7832	12762	12750
	EFFICIENCY (ANNUAL COP)	E	2.56	2.52	2.63	2.64	2.39	2.39	2.48	2.48

SOUTH BEND, INDIANA

GEOGRAPHICAL ZONE	= G	LATITUDE (DEG)	= 41.7	GROUND	AO = 49.57 F	AIR TEMP:	OUTDOOR INDOOR
JANUARY WIND (MPH)	= 12.0	LONGITUDE (DEG)	= 86.3	TEMPERATURE	BO = 24.47 F	WINTER	-3 F 70 F
COOLING(TOTAL/SENS.)	= 1.10	ELEVATION (FT)	= 773.	CONSTANTS:	PO = 0.631 RAD	SUMMER	89 F 78 F

BUILDING DESIGN MONTHLY THERMAL LOADS

MONTH	R-40 INSULATION BIN HEAT LEAK COEFFICIENTS(32F)		UNGLAZED PANEL HEAT	DOMESTIC WATER HEAT	MEDIUM INSULATION HOUSE 1 1200 FT2		MEDIUM INSULATION HOUSE 2 2400 FT2		HIGH INSULATION HOUSE 3 1200 FT2		HIGH INSULATION HOUSE 4 2400 FT2	
(M)	TB(M) MBTU/FT2	SD(M) MBTU/FT2	PAN(M) MBTU/FT2	QHW(M) MBTU	QH(M) MBTU	QC(M) MBTU	QH(M) MBTU	QC(M) MBTU	QH(M) MBTU	QC(M) MBTU	QH(M) MBTU	QC(M) MBTU
JAN	0.200	0.135	10.12	1550	13530	0	30800	0	7820	0	17080	0
FEB	0.131	0.074	20.26	1450	10580	0	25080	0	5610	0	12800	0
MAR	0.219	0.089	42.14	1590	9240	0	23020	0	4610	0	10860	0
APR	0.392	0.154	74.19	1480	4880	0	13630	0	2040	500	5500	0
MAY	0.666	0.276	110.91	1410	2220	1260	7250	0	700	1730	2520	2270
JUN	0.886	0.391	129.62	1250	600	2750	2850	3140	0	3500	0	4450
JUL	1.101	0.514	128.77	1180	0	3730	1050	4590	0	4640	0	5950
AUG	1.162	0.572	128.81	1120	0	3950	0	4870	0	4620	0	5980
SEP	1.052	0.546	117.81	1100	770	2150	2800	2510	0	2600	1090	3360
OCT	0.891	0.490	83.46	1200	2590	580	7380	0	1120	800	3410	990
NOV	0.617	0.363	40.54	1270	6640	0	16410	0	3440	0	8460	0
DEC	0.381	0.244	17.16	1440	11310	0	26080	0	6430	0	14380	0
ANNUAL THERMAL LOADS (MBTU)				16040	62360	14420	156350	15110	31770	18390	76100	23000
DESIGN HOURLY THERMAL LOADS (BTU/HR)					42970	16551	88053	19820	29131	17546	54395	26309

CALCULATED ACES DESIGNS

ACES SIZE	SYSTEM DESIGN PARAMETERS		HOUSE 1 ICE MAKER	HOUSE 1 BRINE CHILLER	HOUSE 2 ICE MAKER	HOUSE 2 BRINE CHILLER	HOUSE 3 ICE MAKER	HOUSE 3 BRINE CHILLER	HOUSE 4 ICE MAKER	HOUSE 4 BRINE CHILLER
	VOLUME OF ICE BIN, FT3	V	3236	1650	3046	1563	4767	2368	5699	2905
	AREA OF PANEL, FT2	A	253	270	1017	1103	12	29	177	198
FULL	LENGTH OF ICE BIN COIL, FT	L	0	638	0	1189	0	472	0	840
	USAGE OF ELECTRICITY, KWH/YR	U	9312	9334	19974	19960	6056	6049	11266	11328
	EFFICIENCY (ANNUAL COP)	E	2.92	2.91	2.75	2.75	3.20	3.21	2.99	2.98
	VOLUME OF ICE BIN, FT3	V	2316	1174	3020	1530	2818	1401	3712	1884
	AREA OF PANEL, FT2	A	331	349	1026	1124	87	105	329	351
PARTIAL	LENGTH OF ICE BIN COIL, FT	L	0	612	0	1185	0	444	0	797
	USAGE OF ELECTRICITY, KWH/YR	U	9751	9764	19971	19959	6793	6968	12110	12125
	EFFICIENCY (ANNUAL COP)	E	2.79	2.79	2.75	2.75	2.86	2.78	2.79	2.78
	VOLUME OF ICE BIN, FT3	V	1396	698	2995	1497	868	434	1725	862
	AREA OF PANEL, FT2	A	*480	*532	1035	1146	296	329	594	658
MINIMUM	LENGTH OF ICE BIN COIL, FT	L	0	573	0	1182	0	384	0	724
	USAGE OF ELECTRICITY, KWH/YR	U	10127	10112	19979	19979	7666	7774	12936	12917
	EFFICIENCY (ANNUAL COP)	E	2.69	2.69	2.75	2.75	2.53	2.50	2.61	2.61

*UNGLAZED PANEL EXCEEDS A PRACTICAL SIZE, AN ALTERNATIVE SUPPLEMENTARY HEAT SOURCE SHOULD BE USED IN THIS DESIGN.

DES MOINES, IOWA

GEOGRAPHICAL ZONE	= I	LATITUDE (DEG)	= 41.5	GROUND	AO = 49.67 F	AIR TEMP:	OUTDOOR	INDOOR
JANUARY WIND (MPH)	= 12.0	LONGITUDE (DEG)	= 93.6	TEMPERATURE	BO = 27.45 F	WINTER	-10 F	70 F
COOLING(TOTAL/SENS.)	= 1.13	ELEVATION (FT)	= 938.	CONSTANTS:	PO = 0.600 RAD	SUMMER	92 F	78 F

BUILDING DESIGN MONTHLY THERMAL LOADS

MONTH	R-40 INSULATION BIN HEAT LEAK COEFFICIENTS (32F)		UNGLAZED PANEL HEAT	DOMESTIC WATER HEAT	MEDIUM INSULATION				HIGH INSULATION			
					HOUSE 1 1200 FT2		HOUSE 2 2400 FT2		HOUSE 3 1200 FT2		HOUSE 4 2400 FT2	
(M)	TB(M)	SD(M)	PAN(M)	QHW(M)	QH(M)	QC(M)	QH(M)	QC(M)	QH(M)	QC(M)	QH(M)	QC(M)
	MBTU/FT2		MBTU/FT2	MBTU	MBTU	MBTU	MBTU	MBTU	MBTU	MBTU	MBTU	MBTU
JAN	0.140	0.108	10.99	1530	15740	0	33470	0	8340	0	18830	0
FEB	0.079	0.048	19.99	1440	12520	0	27010	0	6030	0	14060	0
MAR	0.179	0.065	39.96	1600	10900	0	24190	0	4730	0	11580	0
APR	0.382	0.142	89.45	1490	5460	0	13130	0	1840	550	5280	0
MAY	0.689	0.281	122.99	1430	2220	980	6260	0	400	1770	1920	2450
JUN	0.935	0.410	143.40	1260	0	2510	1960	3540	0	3750	0	4950
JUL	1.167	0.545	148.78	1190	0	3610	0	4980	0	4980	0	6570
AUG	1.227	0.606	142.18	1130	0	3840	0	5470	0	5000	0	6690
SEP	1.097	0.573	116.85	1090	670	1730	2500	2380	0	2290	980	3040
OCT	0.908	0.505	93.91	1190	2520	540	6830	0	920	880	3230	1190
NOV	0.602	0.363	44.88	1250	7390	0	17010	0	3490	0	8980	0
DEC	0.337	0.228	18.99	1420	12670	0	27500	0	6560	0	15350	0
ANNUAL THERMAL LOADS (MBTU)				16020	70090	13210	159860	16370	32310	19220	80210	24890
DESIGN HOURLY THERMAL LOADS (BTU/HR)					49732	15350	96685	23507	31589	17857	60746	28955

CALCULATED ACES DESIGNS

ACES SIZE	SYSTEM DESIGN PARAMETERS		HOUSE 1 ICE MAKER	HOUSE 1 BRINE CHILLER	HOUSE 2 ICE MAKER	HOUSE 2 BRINE CHILLER	HOUSE 3 ICE MAKER	HOUSE 3 BRINE CHILLER	HOUSE 4 ICE MAKER	HOUSE 4 BRINE CHILLER
	VOLUME OF ICE BIN, FT3	V	3118	1577	3955	2016	5231	2582	6503	3299
	AREA OF PANEL, FT2	A	320	338	849	894	0	21	170	189
FULL	LENGTH OF ICE BIN COIL, FT	L	0	721	0	1332	0	513	0	940
	USAGE OF ELECTRICITY, KWH/YR	U	10152	10172	20460	20458	6112	6132	11771	11811
	EFFICIENCY (ANNUAL COP)	E	2.87	2.86	2.75	2.75	3.24	3.23	3.01	3.00
	VOLUME OF ICE BIN, FT3	V	2358	1188	3598	1818	3073	1519	4194	2121
	AREA OF PANEL, FT2	A	385	400	894	982	82	94	321	348
PARTIAL	LENGTH OF ICE BIN COIL, FT	L	0	697	0	1315	0	482	0	891
	USAGE OF ELECTRICITY, KWH/YR	U	10523	10287	20710	20680	6869	7069	12461	12683
	EFFICIENCY (ANNUAL COP)	E	2.77	2.83	2.72	2.72	2.88	2.80	2.85	2.80
	VOLUME OF ICE BIN, FT3	V	1599	799	3241	1620	915	457	1885	942
	AREA OF PANEL, FT2	A	485	537	990	1095	276	306	574	636
MINIMUM	LENGTH OF ICE BIN COIL, FT	L	0	663	0	1296	0	415	0	806
	USAGE OF ELECTRICITY, KWH/YR	U	10783	10768	20676	20850	7956	7947	13858	13838
	EFFICIENCY (ANNUAL COP)	E	2.70	2.70	2.72	2.70	2.49	2.49	2.56	2.56

SIOUX CITY, IOWA

GEOGRAPHICAL ZONE	= I	LATITUDE (DEG)	= 42.4	GROUND	AO = 48.83 F	AIR TEMP:	OUTDOOR INDOOR
JANUARY WIND (MPH)	= 11.0	LONGITUDE (DEG)	= 96.4	TEMPERATURE	BO = 28.76 F	WINTER	-11 F 70 F
COOLING(TOTAL/SENS.)	= 1.11	ELEVATION (FT)	= 1095.	CONSTANTS:	PO = 0.589 RAD	SUMMER	93 F 78 F

BUILDING DESIGN MONTHLY THERMAL LOADS

MONTH	R-40 INSULATION BIN HEAT LEAK COEFFICIENTS(32F)		UNGLAZED PANEL HEAT	DOMESTIC WATER HEAT	MEDIUM INSULATION HOUSE 1 1200 FT2		MEDIUM INSULATION HOUSE 2 2400 FT2		HIGH INSULATION HOUSE 3 1200 FT2		HIGH INSULATION HOUSE 4 2400 FT2	
(M)	TB(M)	SD(M)	PAN(M)	QHW(M)	QH(M)	QC(M)	QH(M)	QC(M)	QH(M)	QC(M)	QH(M)	QC(M)
	MBTU/FT2		MBTU/FT2	MBTU	MBTU	MBTU	MBTU	MBTU	MBTU	MBTU	MBTU	MBTU
JAN	0.082	0.080	10.19	1520	16420	0	34780	0	8700	0	19500	0
FEB	0.026	0.021	19.38	1430	13130	0	28200	0	6350	0	14630	0
MAR	0.129	0.038	41.14	1600	11170	0	24700	0	4850	0	11710	0
APR	0.346	0.121	85.04	1510	5690	0	13510	0	1980	640	5520	0
MAY	0.666	0.266	124.70	1460	2380	1100	6570	1340	460	1930	2080	2740
JUN	0.925	0.402	146.62	1310	0	2670	1980	3760	0	3900	0	5210
JUL	1.164	0.541	149.33	1240	0	4210	0	6100	0	5380	0	7400
AUG	1.223	0.604	146.29	1170	0	4170	0	6060	0	5220	0	7190
SEP	1.086	0.569	120.48	1120	820	2010	2820	2880	0	2530	1180	3520
OCT	0.883	0.496	85.73	1200	2980	0	7780	0	1150	860	3790	1190
NOV	0.564	0.347	42.45	1250	7860	0	17920	0	3770	0	9500	0
DEC	0.285	0.204	18.95	1410	12930	0	28010	0	6590	0	15390	0
ANNUAL THERMAL LOADS (MBTU)				16220	73380	14160	166270	20140	33850	20460	83300	27250
DESIGN HOURLY THERMAL LOADS (BTU/HR)					50900	16686	98986	26093	32180	18872	61897	30928

CALCULATED ACES DESIGNS

ACES SIZE	SYSTEM DESIGN PARAMETERS		HOUSE 1 ICE MAKER	HOUSE 1 BRINE CHILLER	HOUSE 2 ICE MAKER	HOUSE 2 BRINE CHILLER	HOUSE 3 ICE MAKER	HOUSE 3 BRINE CHILLER	HOUSE 4 ICE MAKER	HOUSE 4 BRINE CHILLER
	VOLUME OF ICE BIN, FT3	V	3510	1780	4649	2380	5509	2727	7165	3646
	AREA OF PANEL, FT2	A	314	334	861	880	0	19	157	175
FULL	LENGTH OF ICE BIN COIL, FT	L	0	747	0	1388	0	524	0	967
	USAGE OF ELECTRICITY, KWH/YR	U	10549	10568	21190	21243	6357	6444	12183	12252
	EFFICIENCY (ANNUAL COP)	E	2.88	2.88	2.80	2.79	3.25	3.21	3.05	3.03
	VOLUME OF ICE BIN, FT3	V	2585	1305	4005	2030	3228	1600	4556	2309
	AREA OF PANEL, FT2	A	396	410	915	949	83	96	318	343
PARTIAL	LENGTH OF ICE BIN COIL, FT	L	0	719	0	1361	0	493	0	916
	USAGE OF ELECTRICITY, KWH/YR	U	10969	10987	21515	21550	7141	7348	13162	12931
	EFFICIENCY (ANNUAL COP)	E	2.77	2.77	2.76	2.75	2.89	2.81	2.82	2.87
	VOLUME OF ICE BIN, FT3	V	1660	830	3361	1680	946	473	1946	973
	AREA OF PANEL, FT2	A	528	566	1075	1152	299	320	619	663
MINIMUM	LENGTH OF ICE BIN COIL, FT	L	0	680	0	1329	0	424	0	823
	USAGE OF ELECTRICITY, KWH/YR	U	11309	11386	21559	21948	8257	8299	14416	14505
	EFFICIENCY (ANNUAL COP)	E	2.69	2.67	2.75	2.70	2.50	2.49	2.58	2.56

DODGE CITY, KANSAS

GEOGRAPHICAL ZONE	= I	LATITUDE (DEG)	= 37.8	GROUND	AO = 54.58 F	AIR TEMP:	OUTDOOR / INDOOR
JANUARY WIND (MPH)	= 11.0	LONGITUDE (DEG)	= 100.0	TEMPERATURE	BO = 25.01 F	WINTER	0 F / 70 F
COOLING(TOTAL/SENS.)	= 1.04	ELEVATION (FT)	= 2582.	CONSTANTS:	PO = 0.601 RAD	SUMMER	97 F / 78 F

BUILDING DESIGN MONTHLY THERMAL LOADS

MONTH	R-40 INSULATION BIN HEAT LEAK COEFFICIENTS(32F)		UNGLAZED PANEL HEAT	DOMESTIC WATER HEAT	MEDIUM INSULATION HOUSE 1 1200 FT2		MEDIUM INSULATION HOUSE 2 2400 FT2		HIGH INSULATION HOUSE 3 1200 FT2		HIGH INSULATION HOUSE 4 2400 FT2	
(M)	TB(M) MBTU/FT2	SD(M) MBTU/FT2	PAN(M) MBTU/FT2	QHW(M) MBTU	QH(M) MBTU	QC(M) MBTU	QH(M) MBTU	QC(M) MBTU	QH(M) MBTU	QC(M) MBTU	QH(M) MBTU	QC(M) MBTU
JAN	0.369	0.219	38.64	1590	10690	0	23580	0	5230	0	12380	0
FEB	0.289	0.152	41.71	1450	8760	0	19520	0	3990	0	9700	0
MAR	0.404	0.180	66.79	1540	7830	0	17840	0	3370	0	8510	0
APR	0.581	0.246	102.56	1360	4150	0	10140	0	1420	1020	4320	1510
MAY	0.868	0.376	132.93	1230	1700	1600	5070	2260	0	2290	1650	3320
JUN	1.085	0.490	161.93	1040	0	3700	0	5460	0	4610	0	6360
JUL	1.304	0.616	161.12	960	0	5000	0	7330	0	5810	0	7980
AUG	1.359	0.672	172.12	940	0	5200	0	7450	0	5740	0	7840
SEP	1.233	0.638	149.70	970	0	3160	1230	4830	0	3570	0	5120
OCT	1.069	0.581	113.91	1150	1860	1310	5320	1920	700	1630	2670	2420
NOV	0.782	0.447	65.63	1270	5630	0	13170	0	2780	0	7260	0
DEC	0.549	0.328	43.99	1480	8830	0	19880	0	4310	0	10550	0
ANNUAL THERMAL LOADS (MBTU)				14980	49450	19970	115750	29250	21800	24670	57040	34550
DESIGN HOURLY THERMAL LOADS (BTU/HR)					41868	19331	81304	30599	26603	19196	51078	30966

CALCULATED ACES DESIGNS

ACES SIZE	SYSTEM DESIGN PARAMETERS		HOUSE 1 ICE MAKER	HOUSE 1 BRINE CHILLER	HOUSE 2 ICE MAKER	HOUSE 2 BRINE CHILLER	HOUSE 3 ICE MAKER	HOUSE 3 BRINE CHILLER	HOUSE 4 ICE MAKER	HOUSE 4 BRINE CHILLER
FULL	VOLUME OF ICE BIN, FT3	V	5713	2754	7817	3944	3746	2153	7954	4567
	AREA OF PANEL, FT2	A	21	34	118	131	0	0	0	0
	LENGTH OF ICE BIN COIL, FT	L	0	663	0	1242	0	431	0	838
	USAGE OF ELECTRICITY, KWH/YR	U	8098	8255	16016	15850	6202	5997	9725	9374
	EFFICIENCY (ANNUAL COP)	E	3.05	3.00	2.93	2.96	2.90	3.00	3.21	3.33
PARTIAL	VOLUME OF ICE BIN, FT3	V	3425	1661	5074	2554	2188	1234	4624	2607
	AREA OF PANEL, FT2	A	63	71	171	184	27	27	56	56
	LENGTH OF ICE BIN COIL, FT	L	0	624	0	1178	0	404	0	785
	USAGE OF ELECTRICITY, KWH/YR	U	8859	9092	17168	17206	7274	7074	11654	11381
	EFFICIENCY (ANNUAL COP)	E	2.79	2.72	2.73	2.72	2.48	2.55	2.68	2.74
MINIMUM	VOLUME OF ICE BIN, FT3	V	1137	568	2330	1165	631	315	1293	646
	AREA OF PANEL, FT2	A	126	129	260	268	68	71	142	147
	LENGTH OF ICE BIN COIL, FT	L	0	546	0	1068	0	341	0	660
	USAGE OF ELECTRICITY, KWH/YR	U	9916	9928	18455	18480	7887	7891	13180	13191
	EFFICIENCY (ANNUAL COP)	E	2.49	2.49	2.54	2.54	2.28	2.28	2.37	2.37

TOPEKA, KANSAS

GEOGRAPHICAL ZONE = I	LATITUDE (DEG) = 38.9	GROUND	AO = 53.98 F	AIR TEMP:	OUTDOOR	INDOOR
JANUARY WIND (MPH) = 11.0	LONGITUDE (DEG) = 95.7	TEMPERATURE	BO = 25.74 F	WINTER	0 F	70 F
COOLING(TOTAL/SENS.) = 1.16	ELEVATION (FT) = 1064.	CONSTANTS:	PO = 0.597 RAD	SUMMER	96 F	78 F

BUILDING DESIGN MONTHLY THERMAL LOADS

MONTH (M)	R-40 INSULATION BIN HEAT LEAK COEFFICIENTS(32F) TB(M) MBTU/FT2	SD(M) MBTU/FT2	UNGLAZED PANEL HEAT PAN(M) MBTU/FT2	DOMESTIC WATER HEAT QHW(M) MBTU	MEDIUM INSULATION HOUSE 1 1200 FT2 QH(M) MBTU	QC(M) MBTU	HOUSE 2 2400 FT2 QH(M) MBTU	QC(M) MBTU	HIGH INSULATION HOUSE 3 1200 FT2 QH(M) MBTU	QC(M) MBTU	HOUSE 4 2400 FT2 QH(M) MBTU	QC(M) MBTU
JAN	0.332	0.201	23.02	1580	12430	0	27030	0	6250	0	14650	0
FEB	0.256	0.135	30.13	1450	9810	0	21690	0	4470	0	10850	0
MAR	0.370	0.162	55.70	1550	8390	0	19120	0	3520	0	8940	0
APR	0.555	0.231	99.15	1380	3890	0	9760	0	1200	820	3840	1160
MAY	0.849	0.365	140.45	1260	1220	1770	4000	2390	0	2730	1070	3720
JUN	1.073	0.482	149.99	1070	0	3270	1020	4580	0	4520	0	5920
JUL	1.297	0.612	152.97	990	0	4930	0	6990	0	6040	0	8360
AUG	1.352	0.669	164.44	960	0	5220	0	7250	0	5830	0	8140
SEP	1.223	0.634	137.89	980	0	2750	1300	3830	0	3320	0	4440
OCT	1.051	0.574	106.88	1140	1570	980	4720	1280	540	1360	2230	1860
NOV	0.758	0.437	61.70	1270	5340	0	12750	0	2490	0	6720	0
DEC	0.516	0.313	27.46	1470	10190	0	22630	0	5080	0	12350	0
ANNUAL THERMAL LOADS (MBTU)				15100	52840	18920	124020	26320	23550	24620	60650	33600
DESIGN HOURLY THERMAL LOADS (BTU/HR)					42249	19881	82066	30976	26685	19787	51242	32951

CALCULATED ACES DESIGNS

ACES SIZE	SYSTEM DESIGN PARAMETERS		HOUSE 1 ICE MAKER	HOUSE 1 BRINE CHILLER	HOUSE 2 ICE MAKER	HOUSE 2 BRINE CHILLER	HOUSE 3 ICE MAKER	HOUSE 3 BRINE CHILLER	HOUSE 4 ICE MAKER	HOUSE 4 BRINE CHILLER
FULL	VOLUME OF ICE BIN, FT3	V	5458	2635	6733	3392	4091	2343	8745	5006
	AREA OF PANEL, FT2	A	50	70	239	270	0	0	0	0
	LENGTH OF ICE BIN COIL, FT	L	0	664	0	1229	0	436	0	849
	USAGE OF ELECTRICITY, KWH/YR	U	8399	8510	16875	16900	6335	6139	9763	9330
	EFFICIENCY (ANNUAL COP)	E	3.03	2.99	2.87	2.87	2.93	3.02	3.28	3.43
PARTIAL	VOLUME OF ICE BIN, FT3	V	3378	1642	4691	2358	2408	1353	5124	2878
	AREA OF PANEL, FT2	A	109	131	348	370	41	41	86	84
	LENGTH OF ICE BIN COIL, FT	L	0	628	0	1176	0	409	0	796
	USAGE OF ELECTRICITY, KWH/YR	U	9109	9301	17653	17339	7203	7214	11563	11609
	EFFICIENCY (ANNUAL COP)	E	2.79	2.74	2.75	2.80	2.57	2.57	2.77	2.76
MINIMUM	VOLUME OF ICE BIN, FT3	V	1297	648	2649	1324	725	362	1503	751
	AREA OF PANEL, FT2	A	219	230	454	476	121	128	255	271
	LENGTH OF ICE BIN COIL, FT	L	0	560	0	1095	0	348	0	675
	USAGE OF ELECTRICITY, KWH/YR	U	10166	10159	18465	18724	8027	8021	13418	13407
	EFFICIENCY (ANNUAL COP)	E	2.50	2.51	2.63	2.59	2.31	2.31	2.39	2.39

LOUISVILLE, KENTUCKY

GEOGRAPHICAL ZONE	= C	LATITUDE (DEG)	= 38.2	GROUND	AO = 56.52 F	AIR TEMP:	OUTDOOR	INDOOR
JANUARY WIND (MPH)	= 10.0	LONGITUDE (DEG)	= 85.7	TEMPERATURE	BO = 22.11 F	WINTER	5 F	70 F
COOLING(TOTAL/SENS.)	= 1.13	ELEVATION (FT)	= 477.	CONSTANTS:	PO = 0.571 RAD	SUMMER	93 F	78 F

BUILDING DESIGN MONTHLY THERMAL LOADS

MONTH	R-40 INSULATION BIN HEAT LEAK COEFFICIENTS (32F)		UNGLAZED PANEL HEAT	DOMESTIC WATER HEAT	MEDIUM INSULATION				HIGH INSULATION			
					HOUSE 1 1200 FT2		HOUSE 2 2400 FT2		HOUSE 3 1200 FT2		HOUSE 4 2400 FT2	
(M)	TB(M) MBTU/FT2	SD(M) MBTU/FT2	PAN(M) MBTU/FT2	QHW(M) MBTU	QH(M) MBTU	QC(M) MBTU	QH(M) MBTU	QC(M) MBTU	QH(M) MBTU	QC(M) MBTU	QH(M) MBTU	QC(M) MBTU
JAN	0.490	0.274	30.66	1560	9570	0	21480	0	4420	0	11070	0
FEB	0.410	0.210	42.79	1410	7230	0	16600	0	3010	0	7830	0
MAR	0.534	0.246	65.88	1470	6290	0	14850	0	2470	0	6700	0
APR	0.689	0.304	100.01	1280	2870	770	7520	0	840	1300	2910	1840
MAY	0.951	0.424	117.85	1150	1010	2210	3450	3170	0	3180	990	4280
JUN	1.134	0.521	123.32	970	0	3700	0	5430	0	4840	0	6600
JUL	1.329	0.634	137.72	910	0	5140	0	7390	0	6230	0	8700
AUG	1.370	0.680	128.30	920	0	5240	0	7190	0	5850	0	8110
SEP	1.247	0.644	122.60	970	0	3610	0	5190	0	4170	0	5780
OCT	1.102	0.593	93.06	1160	1590	1210	4690	1710	540	1550	2260	2210
NOV	0.843	0.471	64.18	1290	4250	0	10450	0	1880	0	5370	0
DEC	0.644	0.369	39.10	1480	7590	0	17530	0	3400	0	8950	0
ANNUAL THERMAL LOADS (MBTU)				14570	40400	21880	96570	30080	16560	27120	46080	37520
DESIGN HOURLY THERMAL LOADS (BTU/HR)					38032	19396	73807	29781	24205	19402	46433	32107

CALCULATED ACES DESIGNS

ACES SIZE	SYSTEM DESIGN PARAMETERS		HOUSE 1 ICE MAKER	HOUSE 1 BRINE CHILLER	HOUSE 2 ICE MAKER	HOUSE 2 BRINE CHILLER	HOUSE 3 ICE MAKER	HOUSE 3 BRINE CHILLER	HOUSE 4 ICE MAKER	HOUSE 4 BRINE CHILLER
	VOLUME OF ICE BIN, FT3	V	5881	3135	8656	4277	2911	1691	6254	3616
	AREA OF PANEL, FT2	A	0	0	68	89	0	0	0	0
FULL	LENGTH OF ICE BIN COIL, FT	L	0	618	0	1151	0	386	0	749
	USAGE OF ELECTRICITY, KWH/YR	U	6875	7182	14193	14259	6456	6231	9901	9616
	EFFICIENCY (ANNUAL COP)	E	3.27	3.13	2.92	2.90	2.64	2.74	2.91	2.99
	VOLUME OF ICE BIN, FT3	V	3456	1825	5395	2672	1733	984	3712	2101
	AREA OF PANEL, FT2	A	45	50	137	153	25	25	54	53
PARTIAL	LENGTH OF ICE BIN COIL, FT	L	0	580	0	1088	0	362	0	703
	USAGE OF ELECTRICITY, KWH/YR	U	8096	8180	15250	15560	7257	7274	11315	11359
	EFFICIENCY (ANNUAL COP)	E	2.78	2.75	2.71	2.66	2.35	2.35	2.54	2.53
	VOLUME OF ICE BIN, FT3	V	1031	515	2134	1067	554	277	1170	585
	AREA OF PANEL, FT2	A	120	128	253	270	64	68	138	147
MINIMUM	LENGTH OF ICE BIN COIL, FT	L	0	496	0	971	0	309	0	600
	USAGE OF ELECTRICITY, KWH/YR	U	9254	9292	16804	16781	7780	7771	12583	12569
	EFFICIENCY (ANNUAL COP)	E	2.43	2.42	2.46	2.47	2.19	2.20	2.29	2.29

LAKE CHARLES, LOUISIANA

GEOGRAPHICAL ZONE	= E	LATITUDE (DEG)	= 30.2	GROUND	AO = 67.71 F	AIR TEMP:	OUTDOOR INDOOR
JANUARY WIND (MPH)	= 10.0	LONGITUDE (DEG)	= 93.2	TEMPERATURE	BO = 15.59 F	WINTER	27 F 70 F
COOLING(TOTAL/SENS.)	= 1.24	ELEVATION (FT)	= 15.	CONSTANTS:	PO = 0.559 RAD	SUMMER	93 F 78 F

BUILDING DESIGN MONTHLY THERMAL LOADS

MONTH	R-40 INSULATION BIN HEAT LEAK COEFFICIENTS(32F)		UNGLAZED PANEL HEAT	DOMESTIC WATER HEAT	MEDIUM INSULATION				HIGH INSULATION			
					HOUSE 1 1200 FT2		HOUSE 2 2400 FT2		HOUSE 3 1200 FT2		HOUSE 4 2400 FT2	
(M)	TB(M)	SD(M)	PAN(M)	QHW(M)	QH(M)	QC(M)	QH(M)	QC(M)	QH(M)	QC(M)	QH(M)	QC(M)
	MBTU/FT2		MBTU/FT2	MBTU	MBTU	MBTU	MBTU	MBTU	MBTU	MBTU	MBTU	MBTU
JAN	1.029	0.535	77.13	1270	3020	0	7970	0	1250	530	4000	0
FEB	0.908	0.457	84.39	1140	2000	570	5590	0	680	970	2520	1210
MAR	1.064	0.517	110.90	1200	1400	1190	4320	1550	380	1820	1750	2310
APR	1.153	0.548	130.18	1060	0	2320	1570	3300	0	3310	0	4350
MAY	1.359	0.643	147.79	970	0	4270	0	5910	0	5490	0	7430
JUN	1.466	0.701	145.74	840	0	6540	0	9260	0	6840	0	9950
JUL	1.624	0.791	131.21	800	0	7720	0	11320	0	7520	0	11060
AUG	1.651	0.822	133.25	810	0	7750	0	11320	0	7400	0	10830
SEP	1.540	0.785	133.65	840	0	6240	0	8690	0	6190	0	8720
OCT	1.459	0.759	121.24	980	0	3670	0	5170	0	4090	0	5510
NOV	1.253	0.662	99.47	1070	970	1340	3160	1780	360	1690	1700	2280
DEC	1.136	0.601	78.25	1210	1980	420	5680	0	770	710	2870	930
ANNUAL THERMAL LOADS (MBTU)				12190	9370	42030	28290	58300	3440	46560	12840	64380
DESIGN HOURLY THERMAL LOADS (BTU/HR)					21532	23180	41569	39967	14310	20600	27313	35762

CALCULATED ACES DESIGNS

ACES SIZE	SYSTEM DESIGN PARAMETERS		HOUSE 1		HOUSE 2		HOUSE 3		HOUSE 4	
			ICE MAKER	BRINE CHILLER	ICE MAKER	BRINE CHILLER	ICE MAKER	BRINE CHILLER	ICE MAKER	BRINE CHILLER
	VOLUME OF ICE BIN, FT3	V	1093	665	3210	1883	265	157	1174	680
	AREA OF PANEL, FT2	A	0	0	0	0	0	0	0	0
FULL	LENGTH OF ICE BIN COIL, FT	L	0	311	0	629	0	181	0	384
	USAGE OF ELECTRICITY, KWH/YR	U	8855	8701	12808	12840	9263	9263	13052	13057
	EFFICIENCY (ANNUAL COP)	E	2.10	2.14	2.26	2.25	1.97	1.97	2.01	2.01
	VOLUME OF ICE BIN, FT3	V	745	432	2033	1155	249	137	831	462
	AREA OF PANEL, FT2	A	0	0	18	19	0	0	0	0
PARTIAL	LENGTH OF ICE BIN COIL, FT	L	0	295	0	593	0	178	0	366
	USAGE OF ELECTRICITY, KWH/YR	U	9218	9231	13917	13954	9385	9387	13531	13538
	EFFICIENCY (ANNUAL COP)	E	2.02	2.02	2.08	2.07	1.94	1.94	1.94	1.94
	VOLUME OF ICE BIN, FT3	V	398	199	855	427	233	116	488	244
	AREA OF PANEL, FT2	A	15	16	42	44	0	0	18	19
MINIMUM	LENGTH OF ICE BIN COIL, FT	L	0	267	0	523	0	175	0	338
	USAGE OF ELECTRICITY, KWH/YR	U	9285	9364	14538	14546	9423	9424	13769	13793
	EFFICIENCY (ANNUAL COP)	E	2.01	1.99	1.99	1.99	1.93	1.93	1.90	1.90

NEW ORLEANS, LOUISIANA

GEOGRAPHICAL ZONE = E	LATITUDE (DEG) = 30.0	GROUND AO = 68.28 F	AIR TEMP:	OUTDOOR	INDOOR
JANUARY WIND (MPH) = 9.0	LONGITUDE (DEG) = 90.3	TEMPERATURE BO = 14.45 F	WINTER	29 F	70 F
COOLING(TOTAL/SENS.) = 1.30	ELEVATION (FT) = 4.	CONSTANTS: PO = 0.550 RAD	SUMMER	92 F	78 F

BUILDING DESIGN MONTHLY THERMAL LOADS

MONTH	R-40 INSULATION BIN HEAT LEAK COEFFICIENTS(32F)		UNGLAZED PANEL HEAT	DOMESTIC WATER HEAT	MEDIUM INSULATION HOUSE 1 1200 FT2		HOUSE 2 2400 FT2		HIGH INSULATION HOUSE 3 1200 FT2		HOUSE 4 2400 FT2	
(M)	TB(M)	SD(M)	PAN(M)	QHW(M)	QH(M)	QC(M)	QH(M)	QC(M)	QH(M)	QC(M)	QH(M)	QC(M)
	MBTU/FT2		MBTU/FT2	MBTU	MBTU	MBTU	MBTU	MBTU	MBTU	MBTU	MBTU	MBTU
JAN	1.071	0.554	74.33	1240	2470	0	6830	0	960	630	3310	730
FEB	0.949	0.477	79.87	1110	1550	600	4640	0	470	1080	1980	1250
MAR	1.106	0.539	102.54	1170	1100	1150	3640	1440	0	1840	1420	2210
APR	1.185	0.566	112.21	1040	0	2250	1330	3090	0	3280	0	4200
MAY	1.381	0.657	132.96	960	0	4310	0	5340	0	5220	0	6940
JUN	1.475	0.708	127.26	840	0	5970	0	8190	0	6340	0	8920
JUL	1.624	0.793	123.18	810	0	7240	0	10420	0	7150	0	10380
AUG	1.648	0.822	125.50	820	0	7430	0	10760	0	7170	0	10430
SEP	1.540	0.784	127.97	850	0	6120	0	8310	0	6120	0	8540
OCT	1.468	0.762	116.35	980	0	3540	0	4810	0	4050	0	5310
NOV	1.274	0.669	93.42	1050	720	1270	2570	1650	0	1650	1330	2130
DEC	1.169	0.615	74.03	1190	1780	440	5220	0	680	750	2620	870
ANNUAL THERMAL LOADS (MBTU)				12060	7620	40320	24230	54010	2110	45280	10660	61910
DESIGN HOURLY THERMAL LOADS (BTU/HR)					20186	21637	38948	37469	13491	19369	25735	33736

CALCULATED ACES DESIGNS

ACES SIZE	SYSTEM DESIGN PARAMETERS		HOUSE 1 ICE MAKER	HOUSE 1 BRINE CHILLER	HOUSE 2 ICE MAKER	HOUSE 2 BRINE CHILLER	HOUSE 3 ICE MAKER	HOUSE 3 BRINE CHILLER	HOUSE 4 ICE MAKER	HOUSE 4 BRINE CHILLER
FULL	VOLUME OF ICE BIN, FT3	V	912	535	2785	1641				
	AREA OF PANEL, FT2	A	0	0	0	0				
	LENGTH OF ICE BIN COIL, FT	L	0	286	0	585				
	USAGE OF ELECTRICITY, KWH/YR	U	8342	8346	12059	11742				
	EFFICIENCY (ANNUAL COP)	E	2.11	2.11	2.19	2.25				
PARTIAL	VOLUME OF ICE BIN, FT3	V	628	353	1766	1007				
	AREA OF PANEL, FT2	A	0	0	17	18				
	LENGTH OF ICE BIN COIL, FT	L	0	272	0	551				
	USAGE OF ELECTRICITY, KWH/YR	U	8708	8717	12736	12775				
	EFFICIENCY (ANNUAL COP)	E	2.02	2.02	2.08	2.07				
MINIMUM	VOLUME OF ICE BIN, FT3	V	344	172	747	373	204	102	422	211
	AREA OF PANEL, FT2	A	13	15	38	41	0	0	0	11
	LENGTH OF ICE BIN COIL, FT	L	0	248	0	486	0	163	0	315
	USAGE OF ELECTRICITY, KWH/YR	U	8832	8832	13320	13319	9081	9080	12980	12981
	EFFICIENCY (ANNUAL COP)	E	1.99	1.99	1.99	1.99	1.92	1.92	1.91	1.91

SHREVEPORT, LOUISIANA

GEOGRAPHICAL ZONE	= D	LATITUDE (DEG)	= 32.5	GROUND	AO = 64.34 F	AIR TEMP:	OUTDOOR	INDOOR
JANUARY WIND (MPH)	= 9.0	LONGITUDE (DEG)	= 93.8	TEMPERATURE	BO = 18.70 F	WINTER	20 F	70 F
COOLING(TOTAL/SENS.)	= 1.21	ELEVATION (FT)	= 254.	CONSTANTS:	PO = 0.559 RAD	SUMMER	97 F	78 F

BUILDING DESIGN MONTHLY THERMAL LOADS

MONTH	R-40 INSULATION BIN HEAT LEAK COEFFICIENTS(32F)		UNGLAZED PANEL HEAT	DOMESTIC WATER HEAT	MEDIUM INSULATION				HIGH INSULATION			
					HOUSE 1 1200 FT2		HOUSE 2 2400 FT2		HOUSE 3 1200 FT2		HOUSE 4 2400 FT2	
(M)	TB(M) MBTU/FT2	SD(M) MBTU/FT2	PAN(M) MBTU/FT2	QHW(M) MBTU	QH(M) MBTU	QC(M) MBTU	QH(M) MBTU	QC(M) MBTU	QH(M) MBTU	QC(M) MBTU	QH(M) MBTU	QC(M) MBTU
JAN	0.844	0.446	59.16	1370	4990	0	12130	0	2190	0	6100	0
FEB	0.736	0.372	65.95	1230	3520	0	8930	0	1330	430	4080	0
MAR	0.886	0.425	94.26	1290	2830	570	7490	0	950	980	3280	1350
APR	1.005	0.468	113.22	1130	900	1620	3110	2170	0	2470	1000	3150
MAY	1.240	0.577	134.27	1010	0	3620	0	5200	0	4810	0	6390
JUN	1.381	0.652	139.38	860	0	5360	0	7110	0	6030	0	8380
JUL	1.557	0.753	145.53	820	0	7560	0	11030	0	7550	0	11080
AUG	1.590	0.791	145.90	820	0	7430	0	10800	0	7250	0	10540
SEP	1.470	0.753	125.94	870	0	5110	0	7060	0	5360	0	7320
OCT	1.359	0.716	107.75	1030	0	2680	1550	3770	0	3070	0	4150
NOV	1.125	0.605	78.83	1140	1930	750	5310	0	840	1060	2850	1380
DEC	0.972	0.525	64.07	1300	3790	0	9620	0	1660	330	4960	0
ANNUAL THERMAL LOADS (MBTU)				12870	17960	34700	48140	47140	6970	39340	22270	53740
DESIGN HOURLY THERMAL LOADS (BTU/HR)					26774	23941	51811	40505	17354	21531	33188	37069

CALCULATED ACES DESIGNS

ACES SIZE	SYSTEM DESIGN PARAMETERS		HOUSE 1 ICE MAKER	HOUSE 1 BRINE CHILLER	HOUSE 2 ICE MAKER	HOUSE 2 BRINE CHILLER	HOUSE 3 ICE MAKER	HOUSE 3 BRINE CHILLER	HOUSE 4 ICE MAKER	HOUSE 4 BRINE CHILLER
	VOLUME OF ICE BIN, FT3	V	2526	1501	6180	3660	1028	599	2766	1639
	AREA OF PANEL, FT2	A	0	0	0	0	0	0	0	0
FULL	LENGTH OF ICE BIN COIL, FT	L	0	416	0	827	0	254	0	508
	USAGE OF ELECTRICITY, KWH/YR	U	7977	7782	12111	11692	8155	8158	11757	11436
	EFFICIENCY (ANNUAL COP)	E	2.41	2.47	2.62	2.71	2.13	2.13	2.21	2.28
	VOLUME OF ICE BIN, FT3	V	1558	898	3715	2142	679	382	1729	993
	AREA OF PANEL, FT2	A	15	15	36	36	0	0	19	19
PARTIAL	LENGTH OF ICE BIN COIL, FT	L	0	391	0	776	0	240	0	478
	USAGE OF ELECTRICITY, KWH/YR	U	8935	8736	13933	13690	8494	8518	12637	12658
	EFFICIENCY (ANNUAL COP)	E	2.15	2.20	2.27	2.31	2.04	2.04	2.06	2.06
	VOLUME OF ICE BIN, FT3	V	589	294	1250	625	330	165	692	346
	AREA OF PANEL, FT2	A	38	40	83	87	17	19	45	48
MINIMUM	LENGTH OF ICE BIN COIL, FT	L	0	340	0	666	0	216	0	418
	USAGE OF ELECTRICITY, KWH/YR	U	9234	9229	14869	14855	8651	8654	13058	13052
	EFFICIENCY (ANNUAL COP)	E	2.08	2.08	2.13	2.13	2.00	2.00	1.99	2.00

PORTLAND, MAINE

GEOGRAPHICAL ZONE = A	LATITUDE (DEG) = 43.6	GROUND	AO = 45.47 F	AIR TEMP:	OUTDOOR	INDOOR
JANUARY WIND (MPH) = 10.0	LONGITUDE (DEG) = 70.3	TEMPERATURE	BO = 22.38 F	WINTER	-6 F	70 F
COOLING(TOTAL/SENS.) = 1.08	ELEVATION (FT) = 43.	CONSTANTS:	PO = 0.677 RAD	SUMMER	86 F	78 F

BUILDING DESIGN MONTHLY THERMAL LOADS

MONTH	R-40 INSULATION BIN HEAT LEAK COEFFICIENTS(32F)		UNGLAZED PANEL HEAT	DOMESTIC WATER HEAT	MEDIUM INSULATION HOUSE 1 1200 FT2		MEDIUM INSULATION HOUSE 2 2400 FT2		HIGH INSULATION HOUSE 3 1200 FT2		HIGH INSULATION HOUSE 4 2400 FT2	
(M)	TB(M) MBTU/FT2	SD(M) MBTU/FT2	PAN(M) MBTU/FT2	QHW(M) MBTU	QH(M) MBTU	QC(M) MBTU	QH(M) MBTU	QC(M) MBTU	QH(M) MBTU	QC(M) MBTU	QH(M) MBTU	QC(M) MBTU
JAN	0.096	0.082	12.60	1520	13970	0	26260	0	7920	0	16320	0
FEB	0.032	0.027	19.52	1420	11550	0	21740	0	6170	0	12900	0
MAR	0.093	0.030	37.40	1600	9950	0	18960	0	4910	0	10470	0
APR	0.248	0.086	56.10	1530	6180	0	12090	0	2760	0	6290	0
MAY	0.491	0.194	84.48	1520	3570	0	7290	0	1230	790	3440	1140
JUN	0.699	0.301	98.76	1400	1470	1550	3540	2280	0	2020	1250	2810
JUL	0.900	0.415	117.56	1360	0	2800	1720	4140	0	3500	0	4730
AUG	0.966	0.473	115.03	1290	560	2730	1810	4020	0	3350	0	4540
SEP	0.879	0.455	93.67	1230	1520	1280	3740	1810	500	1640	1740	2210
OCT	0.737	0.408	73.45	1290	3650	0	7770	0	1620	0	4290	0
NOV	0.491	0.295	39.24	1310	6680	0	13450	0	3240	0	7550	0
DEC	0.270	0.185	17.70	1440	11890	0	22700	0	6610	0	13940	0
ANNUAL THERMAL LOADS (MBTU)				16910	70990	8360	141070	12250	34960	11300	78190	15430
DESIGN HOURLY THERMAL LOADS (BTU/HR)					45458	13013	78578	20503	30706	15855	54736	23836

CALCULATED ACES DESIGNS

ACES SIZE	SYSTEM DESIGN PARAMETERS		HOUSE 1 ICE MAKER	HOUSE 1 BRINE CHILLER	HOUSE 2 ICE MAKER	HOUSE 2 BRINE CHILLER	HOUSE 3 ICE MAKER	HOUSE 3 BRINE CHILLER	HOUSE 4 ICE MAKER	HOUSE 4 BRINE CHILLER
	VOLUME OF ICE BIN, FT3	V					2456	1275	3207	1676
	AREA OF PANEL, FT2	A					117	125	338	349
FULL	LENGTH OF ICE BIN COIL, FT	L					0	460	0	790
	USAGE OF ELECTRICITY, KWH/YR	U					6242	6261	11241	11269
	EFFICIENCY (ANNUAL COP)	E					2.97	2.96	2.88	2.87
	VOLUME OF ICE BIN, FT3	V					1665	856	2429	1251
	AREA OF PANEL, FT2	A					180	188	404	415
PARTIAL	LENGTH OF ICE BIN COIL, FT	L					0	438	0	762
	USAGE OF ELECTRICITY, KWH/YR	U					6640	6648	11624	11643
	EFFICIENCY (ANNUAL COP)	E					2.79	2.78	2.79	2.78
	VOLUME OF ICE BIN, FT3	V	1434	717	2572	1286	874	437	1652	826
	AREA OF PANEL, FT2	A	416	* 438	* 752	* 792	251	265	480	505
MINIMUM	LENGTH OF ICE BIN COIL, FT	L	0	604	0	1050	0	403	0	724
	USAGE OF ELECTRICITY, KWH/YR	U	10226	10182	18308	18296	6962	6956	11941	12098
	EFFICIENCY (ANNUAL COP)	E	2.76	2.77	2.72	2.73	2.66	2.66	2.71	2.68

*UNGLAZED PANEL EXCEEDS A PRACTICAL SIZE, AN ALTERNATIVE SUPPLEMENTARY HEAT SOURCE SHOULD BE USED IN THIS DESIGN.

FALMOUTH, MASSACHUSETTS

GEOGRAPHICAL ZONE	= A	LATITUDE (DEG)	= 41.6	GROUND	AO = 49.44 F	AIR TEMP:	OUTDOOR	INDOOR
JANUARY WIND (MPH)	= 12.0	LONGITUDE (DEG)	= 70.5	TEMPERATURE	BO = 20.56 F	WINTER	5 F	70 F
COOLING(TOTAL/SENS.)	= 1.13	ELEVATION (FT)	= 132.	CONSTANTS:	PO = 0.747 RAD	SUMMER	82 F	78 F

BUILDING DESIGN MONTHLY THERMAL LOADS

MONTH	R-40 INSULATION BIN HEAT LEAK COEFFICIENTS(32F)		UNGLAZED PANEL HEAT	DOMESTIC WATER HEAT	MEDIUM INSULATION HOUSE 1 1200 FT2		HOUSE 2 2400 FT2		HIGH INSULATION HOUSE 3 1200 FT2		HOUSE 4 2400 FT2	
(M)	TB(M)	SD(M)	PAN(M)	QHW(M)	QH(M)	QC(M)	QH(M)	QC(M)	QH(M)	QC(M)	QH(M)	QC(M)
	MBTU/FT2		MBTU/FT2	MBTU	MBTU	MBTU	MBTU	MBTU	MBTU	MBTU	MBTU	MBTU
JAN	0.292	0.180	19.26	1560	11330	0	21730	0	6220	0	13310	0
FEB	0.202	0.113	21.85	1450	10120	0	19380	0	5390	0	11610	0
MAR	0.260	0.119	39.26	1590	8670	0	16850	0	4150	0	9240	0
APR	0.386	0.161	63.37	1470	5360	0	10730	0	2340	0	5580	0
MAY	0.609	0.258	109.29	1400	3060	0	6520	0	990	670	3100	950
JUN	0.798	0.354	114.59	1230	880	1690	2470	2420	0	2250	700	3000
JUL	0.998	0.465	127.76	1170	0	2780	0	4060	0	3960	0	4980
AUG	1.075	0.525	125.26	1120	0	2700	0	3940	0	3770	0	4760
SEP	1.003	0.513	111.75	1100	670	1470	2080	2090	0	2030	840	2590
OCT	0.891	0.479	89.47	1220	2270	0	5370	0	850	430	2770	0
NOV	0.663	0.377	55.43	1290	4650	0	9940	0	2110	0	5400	0
DEC	0.464	0.278	27.55	1460	9420	0	18470	0	5050	0	11150	0
ANNUAL THERMAL LOADS (MBTU)				16060	56430	8640	113540	12510	27100	13110	63700	16280
DESIGN HOURLY THERMAL LOADS (BTU/HR)					37876	11622	65264	18215	25349	15142	45001	22579

CALCULATED ACES DESIGNS

ACES SIZE	SYSTEM DESIGN PARAMETERS		HOUSE 1 ICE MAKER	HOUSE 1 BRINE CHILLER	HOUSE 2 ICE MAKER	HOUSE 2 BRINE CHILLER	HOUSE 3 ICE MAKER	HOUSE 3 BRINE CHILLER	HOUSE 4 ICE MAKER	HOUSE 4 BRINE CHILLER
	VOLUME OF ICE BIN, FT3	V	1819	934	2513	1294	3225	1660	4017	2075
	AREA OF PANEL, FT2	A	217	224	444	463	33	41	141	150
FULL	LENGTH OF ICE BIN COIL, FT	L	0	532	0	893	0	401	0	683
	USAGE OF ELECTRICITY, KWH/YR	U	8604	8621	15257	15236	5410	5416	9702	9727
	EFFICIENCY (ANNUAL COP)	E	2.76	2.76	2.73	2.73	3.05	3.04	2.90	2.89
	VOLUME OF ICE BIN, FT3	V	1507	765	2335	1186	1973	1010	2697	1381
	AREA OF PANEL, FT2	A	237	248	461	482	78	83	211	221
PARTIAL	LENGTH OF ICE BIN COIL, FT	L	0	519	0	883	0	378	0	650
	USAGE OF ELECTRICITY, KWH/YR	U	8734	8744	15284	15413	5978	5995	10230	10417
	EFFICIENCY (ANNUAL COP)	E	2.72	2.72	2.72	2.70	2.76	2.75	2.75	2.70
	VOLUME OF ICE BIN, FT3	V	1194	597	2156	1078	720	360	1377	688
	AREA OF PANEL, FT2	A	263	276	477	500	156	164	300	315
MINIMUM	LENGTH OF ICE BIN COIL, FT	L	0	503	0	873	0	332	0	596
	USAGE OF ELECTRICITY, KWH/YR	U	8907	8900	15414	15402	6479	6486	10899	10890
	EFFICIENCY (ANNUAL COP)	E	2.67	2.67	2.70	2.70	2.54	2.54	2.58	2.58

BATTLE CREEK, MICHIGAN

GEOGRAPHICAL ZONE	= F	LATITUDE (DEG)	= 42.3	GROUND	AO = 48.40 F	AIR TEMP:	OUTDOOR INDOOR
JANUARY WIND (MPH)	= 10.0	LONGITUDE (DEG)	= 85.3	TEMPERATURE	BO = 24.10 F	WINTER	1 F 70 F
COOLING(TOTAL/SENS.)	= 1.09	ELEVATION (FT)	= 941.	CONSTANTS:	PO = 0.606 RAD	SUMMER	89 F 78 F

BUILDING DESIGN MONTHLY THERMAL LOADS

MONTH	R-40 INSULATION BIN HEAT LEAK COEFFICIENTS (32F)		UNGLAZED PANEL HEAT	DOMESTIC WATER HEAT	MEDIUM INSULATION				HIGH INSULATION			
					HOUSE 1 1200 FT2		HOUSE 2 2400 FT2		HOUSE 3 1200 FT2		HOUSE 4 2400 FT2	
(M)	TB(M) MBTU/FT2	SD(M)	PAN(M) MBTU/FT2	QHW(M) MBTU	QH(M) MBTU	QC(M) MBTU	QH(M) MBTU	QC(M) MBTU	QH(M) MBTU	QC(M) MBTU	QH(M) MBTU	QC(M) MBTU
JAN	0.158	0.112	10.78	1550	13720	0	29570	0	6790	0	15840	0
FEB	0.099	0.057	16.48	1450	11810	0	25630	0	5450	0	12980	0
MAR	0.188	0.073	36.14	1600	10580	0	23510	0	4420	0	11000	0
APR	0.365	0.140	56.01	1490	6510	0	15300	0	2290	0	6320	0
MAY	0.635	0.261	91.37	1440	2910	760	7710	0	640	1410	2630	1980
JUN	0.850	0.374	110.05	1280	640	2300	2590	3240	0	3580	0	4700
JUL	1.057	0.494	112.07	1220	0	3130	1250	4450	0	4350	0	5640
AUG	1.111	0.548	106.68	1160	0	2810	1410	4000	0	3820	0	5050
SEP	0.997	0.519	90.96	1130	1160	1220	3790	1620	0	1730	1460	2340
OCT	0.833	0.462	71.26	1230	3240	0	8450	0	1210	650	3910	860
NOV	0.564	0.336	29.57	1290	7800	0	17880	0	3500	0	9180	0
DEC	0.332	0.218	11.72	1450	12380	0	26930	0	6210	0	14700	0
ANNUAL THERMAL LOADS (MBTU)				16290	70750	10220	164020	13310	30510	15540	78020	20570
DESIGN HOURLY THERMAL LOADS (BTU/HR)					43628	11841	84859	17247	26662	15362	51225	23901

CALCULATED ACES DESIGNS

ACES SIZE	SYSTEM DESIGN PARAMETERS		HOUSE 1 ICE MAKER	HOUSE 1 BRINE CHILLER	HOUSE 2 ICE MAKER	HOUSE 2 BRINE CHILLER	HOUSE 3 ICE MAKER	HOUSE 3 BRINE CHILLER	HOUSE 4 ICE MAKER	HOUSE 4 BRINE CHILLER
	VOLUME OF ICE BIN, FT3	V					3837	1955	4842	2480
	AREA OF PANEL, FT2	A					46	60	287	311
FULL	LENGTH OF ICE BIN COIL, FT	L					0	427	0	782
	USAGE OF ELECTRICITY, KWH/YR	U					5874	5890	11363	11324
	EFFICIENCY (ANNUAL COP)	E					3.11	3.10	2.96	2.97
	VOLUME OF ICE BIN, FT3	V					2305	1171	3226	1642
	AREA OF PANEL, FT2	A					135	149	436	463
PARTIAL	LENGTH OF ICE BIN COIL, FT	L					0	402	0	744
	USAGE OF ELECTRICITY, KWH/YR	U					6480	6479	11947	11787
	EFFICIENCY (ANNUAL COP)	E					2.82	2.82	2.82	2.86
	VOLUME OF ICE BIN, FT3	V	1414	707	2881	1440	773	386	1610	805
	AREA OF PANEL, FT2	A	583	* 614	1197	* 1260	321	338	676	712
MINIMUM	LENGTH OF ICE BIN COIL, FT	L	0	582	0	1139	0	350	0	681
	USAGE OF ELECTRICITY, KWH/YR	U	10402	10489	20812	20800	7150	7266	12702	12902
	EFFICIENCY (ANNUAL COP)	E	2.74	2.72	2.73	2.73	2.55	2.51	2.65	2.61

*UNGLAZED PANEL EXCEEDS A PRACTICAL SIZE, AN ALTERNATIVE SUPPLEMENTARY HEAT SOURCE SHOULD BE USED IN THIS DESIGN.

DETROIT, MICHIGAN

GEOGRAPHICAL ZONE	= F	LATITUDE (DEG)	= 42.4	GROUND	AO = 48.07 F	AIR TEMP:	OUTDOOR INDOOR
JANUARY WIND (MPH)	= 11.0	LONGITUDE (DEG)	= 83.0	TEMPERATURE	BO = 24.85 F	WINTER	3 F 70 F
COOLING(TOTAL/SENS.)	= 1.13	ELEVATION (FT)	= 619.	CONSTANTS:	PO = 0.672 RAD	SUMMER	89 F 78 F

BUILDING DESIGN MONTHLY THERMAL LOADS

MONTH (M)	R-40 INSULATION BIN HEAT LEAK COEFFICIENTS (32F) TB(M) MBTU/FT2	SD(M) MBTU/FT2	UNGLAZED PANEL HEAT PAN(M) MBTU/FT2	DOMESTIC WATER HEAT QHW(M) MBTU	MEDIUM INSULATION HOUSE 1 1200 FT2 QH(M) MBTU	QC(M) MBTU	HOUSE 2 2400 FT2 QH(M) MBTU	QC(M) MBTU	HIGH INSULATION HOUSE 3 1200 FT2 QH(M) MBTU	QC(M) MBTU	HOUSE 4 2400 FT2 QH(M) MBTU	QC(M) MBTU
JAN	0.147	0.111	7.52	1530	14880	0	31810	0	7700	0	17610	0
FEB	0.073	0.048	12.08	1440	12890	0	27710	0	6250	0	14560	0
MAR	0.145	0.055	31.19	1610	11370	0	25110	0	4830	0	11940	0
APR	0.317	0.117	63.56	1510	6510	0	15360	0	2280	0	6250	0
MAY	0.589	0.238	98.67	1470	3150	0	8260	0	760	1240	2870	1720
JUN	0.818	0.355	117.03	1310	1050	1840	3620	2480	0	2880	870	3850
JUL	1.042	0.482	130.29	1250	0	3110	1190	4580	0	4530	0	5880
AUG	1.115	0.546	125.80	1180	0	2990	1130	4260	0	4150	0	5520
SEP	1.015	0.525	108.79	1140	870	1500	3020	2000	0	2190	1120	2880
OCT	0.857	0.473	85.62	1220	2820	0	7550	0	970	580	3460	790
NOV	0.584	0.347	41.71	1270	6990	0	16380	0	3030	0	8220	0
DEC	0.340	0.225	12.48	1430	12490	0	27140	0	6360	0	15020	0
ANNUAL THERMAL LOADS (MBTU)				16360	73020	9440	168280	13320	32180	15570	81920	20640
DESIGN HOURLY THERMAL LOADS (BTU/HR)					42597	12976	82867	19158	25808	16597	49579	26498

CALCULATED ACES DESIGNS

ACES SIZE	SYSTEM DESIGN PARAMETERS		HOUSE 1 ICE MAKER	HOUSE 1 BRINE CHILLER	HOUSE 2 ICE MAKER	HOUSE 2 BRINE CHILLER	HOUSE 3 ICE MAKER	HOUSE 3 BRINE CHILLER	HOUSE 4 ICE MAKER	HOUSE 4 BRINE CHILLER
	VOLUME OF ICE BIN, FT3	V					3794	1939	4832	2491
	AREA OF PANEL, FT2	A					70	84	403	438
FULL	LENGTH OF ICE BIN COIL, FT	L					0	415	0	760
	USAGE OF ELECTRICITY, KWH/YR	U					6025	6038	11666	11689
	EFFICIENCY (ANNUAL COP)	E					3.12	3.11	2.99	2.98
	VOLUME OF ICE BIN, FT3	V					2325	1183	3302	1688
	AREA OF PANEL, FT2	A					190	211	611	638
PARTIAL	LENGTH OF ICE BIN COIL, FT	L					0	391	0	725
	USAGE OF ELECTRICITY, KWH/YR	U					6605	6609	12292	12517
	EFFICIENCY (ANNUAL COP)	E					2.84	2.84	2.83	2.78
	VOLUME OF ICE BIN, FT3	V	1520	760	3087	1543	856	428	1772	886
	AREA OF PANEL, FT2	A	*729	*806	*1489	*1646	408	452	854	944
MINIMUM	LENGTH OF ICE BIN COIL, FT	L	0	575	0	1125	0	345	0	670
	USAGE OF ELECTRICITY, KWH/YR	U	10616	10604	21223	21203	7364	7357	13128	13115
	EFFICIENCY (ANNUAL COP)	E	2.73	2.73	2.73	2.74	2.55	2.55	2.65	2.66

*UNGLAZED PANEL EXCEEDS A PRACTICAL SIZE, AN ALTERNATIVE SUPPLEMENTARY HEAT SOURCE SHOULD BE USED IN THIS DESIGN.

SAULT SAINTE MARIE, MICHIGAN

GEOGRAPHICAL ZONE	= F	LATITUDE (DEG)	= 46.5	GROUND	AO = 40.17 F	AIR TEMP:	OUTDOOR / INDOOR
JANUARY WIND (MPH)	= 10.0	LONGITUDE (DEG)	= 84.4	TEMPERATURE	BO = 25.57 F	WINTER	-14 F / 70 F
COOLING(TOTAL/SENS.)	= 1.07	ELEVATION (FT)	= 721.	CONSTANTS:	PO = 0.694 RAD	SUMMER	81 F / 78 F

BUILDING DESIGN MONTHLY THERMAL LOADS

MONTH	R-40 INSULATION BIN HEAT LEAK COEFFICIENTS(32F)		UNGLAZED PANEL HEAT	DOMESTIC WATER HEAT	MEDIUM INSULATION HOUSE 1 1200 FT2		MEDIUM INSULATION HOUSE 2 2400 FT2		HIGH INSULATION HOUSE 3 1200 FT2		HIGH INSULATION HOUSE 4 2400 FT2	
(M)	TB(M)	SD(M)	PAN(M)	QHW(M)	QH(M)	QC(M)	QH(M)	QC(M)	QH(M)	QC(M)	QH(M)	QC(M)
	MBTU/FT2		MBTU/FT2	MBTU	MBTU	MBTU	MBTU	MBTU	MBTU	MBTU	MBTU	MBTU
JAN	-0.155	-0.038	3.13	1500	18890	0	39620	0	10120	0	22250	0
FEB	-0.205	-0.090	5.12	1390	16730	0	35190	0	8560	0	19020	0
MAR	-0.167	-0.101	21.74	1570	14850	0	31910	0	6670	0	15520	0
APR	0.016	-0.034	46.11	1550	9710	0	21820	0	3710	0	9280	0
MAY	0.283	0.083	83.10	1600	5690	0	13490	0	1840	580	5350	0
JUN	0.531	0.210	96.91	1540	3010	910	7800	0	600	1610	2570	2350
JUL	0.754	0.336	111.85	1570	1510	1900	4780	2580	0	2830	1190	4000
AUG	0.835	0.405	107.13	1530	1310	1610	4390	2140	0	2420	1220	3350
SEP	0.748	0.391	81.94	1440	2650	0	7110	0	770	750	2940	960
OCT	0.581	0.335	61.31	1470	5210	0	12790	0	1900	0	5680	0
NOV	0.310	0.212	20.02	1410	10350	0	22940	0	4820	0	11940	0
DEC	0.048	0.081	5.00	1470	16290	0	34540	0	8650	0	19410	0
ANNUAL THERMAL LOADS (MBTU)				18040	106200	4420	236380	4720	47640	8190	116370	10660
DESIGN HOURLY THERMAL LOADS (BTU/HR)					55124	5810	107330	5819	34120	12444	65685	18468

CALCULATED ACES DESIGNS

ACES SIZE	SYSTEM DESIGN PARAMETERS		HOUSE 1 ICE MAKER	HOUSE 1 BRINE CHILLER	HOUSE 2 ICE MAKER	HOUSE 2 BRINE CHILLER	HOUSE 3 ICE MAKER	HOUSE 3 BRINE CHILLER	HOUSE 4 ICE MAKER	HOUSE 4 BRINE CHILLER
	VOLUME OF ICE BIN, FT3	V					1217	656	1318	707
	AREA OF PANEL, FT2	A					* 1180	* 1188	* 3630	* 3673
FULL	LENGTH OF ICE BIN COIL, FT	L					0	465	0	832
	USAGE OF ELECTRICITY, KWH/YR	U					7641	7641	15376	15379
	EFFICIENCY (ANNUAL COP)	E					2.83	2.83	2.76	2.76
	VOLUME OF ICE BIN, FT3	V					1146	597	1758	903
	AREA OF PANEL, FT2	A					* 1209	* 1269	* 3120	* 3263
PARTIAL	LENGTH OF ICE BIN COIL, FT	L					0	459	0	858
	USAGE OF ELECTRICITY, KWH/YR	U					7640	7703	15072	15068
	EFFICIENCY (ANNUAL COP)	E					2.83	2.81	2.82	2.82
	VOLUME OF ICE BIN, FT3	V	1888	944	3807	1903	1076	538	2199	1099
	AREA OF PANEL, FT2	A	* 2234	* 2442	* 4259	* 4390	* 1275	* 1393	* 2610	* 2853
MINIMUM	LENGTH OF ICE BIN COIL, FT	L	0	741	0	1449	0	453	0	880
	USAGE OF ELECTRICITY, KWH/YR	U	14057	14050	29362	29361	7703	7699	15334	15326
	EFFICIENCY (ANNUAL COP)	E	2.68	2.68	2.59	2.59	2.81	2.81	2.77	2.77

*UNGLAZED PANEL EXCEEDS A PRACTICAL SIZE, AN ALTERNATIVE SUPPLEMENTARY HEAT SOURCE SHOULD BE USED IN THIS DESIGN.

DULUTH, MINNESOTA

GEOGRAPHICAL ZONE	= H	LATITUDE (DEG)	= 46.8	GROUND	AO = 38.67 F	AIR TEMP:	OUTDOOR	INDOOR
JANUARY WIND (MPH)	= 13.0	LONGITUDE (DEG)	= 92.2	TEMPERATURE	BO = 27.95 F	WINTER	-21 F	70 F
COOLING(TOTAL/SENS.)	= 1.05	ELEVATION (FT)	= 1428.	CONSTANTS:	PO = 0.637 RAD	SUMMER	82 F	78 F

BUILDING DESIGN MONTHLY THERMAL LOADS

MONTH	R-40 INSULATION BIN HEAT LEAK COEFFICIENTS(32F)		UNGLAZED PANEL HEAT	DOMESTIC WATER HEAT	MEDIUM INSULATION HOUSE 1 1200 FT2		MEDIUM INSULATION HOUSE 2 2400 FT2		HIGH INSULATION HOUSE 3 1200 FT2		HIGH INSULATION HOUSE 4 2400 FT2	
(M)	TB(M)	SD(M)	PAN(M)	QHW(M)	QH(M)	QC(M)	QH(M)	QC(M)	QH(M)	QC(M)	QH(M)	QC(M)
	MBTU/FT2		MBTU/FT2	MBTU	MBTU	MBTU	MBTU	MBTU	MBTU	MBTU	MBTU	MBTU
JAN	-0.269	-0.094	1.52	1520	21930	0	45540	0	12330	0	26540	0
FEB	-0.301	-0.140	5.26	1390	17880	0	37470	0	9300	0	20460	0
MAR	-0.250	-0.148	20.68	1560	15650	0	33490	0	7120	0	16460	0
APR	-0.037	-0.067	50.85	1530	10160	0	22720	0	3930	0	9820	0
MAY	0.259	0.065	87.89	1600	6040	0	14360	0	1980	540	5650	0
JUN	0.527	0.204	112.40	1550	2890	800	7600	0	550	1500	2450	2160
JUL	0.757	0.337	130.14	1600	1430	1720	4630	2280	0	2640	1140	3680
AUG	0.829	0.404	121.27	1580	1240	1610	4220	2100	0	2430	1140	3350
SEP	0.721	0.383	94.80	1510	2940	0	7700	0	910	680	3330	940
OCT	0.522	0.312	66.19	1530	5710	0	13760	0	2190	0	6260	0
NOV	0.226	0.176	19.12	1470	12060	0	26270	0	6000	0	14230	0
DEC	-0.060	0.031	4.51	1510	18370	0	38580	0	10060	0	22150	0
ANNUAL THERMAL LOADS (MBTU)				18350	116300	4130	256340	4380	54370	7790	129630	10130
DESIGN HOURLY THERMAL LOADS (BTU/HR)					60386	6021	117610	6247	37728	12436	72689	18513

CALCULATED ACES DESIGNS

ACES SIZE	SYSTEM DESIGN PARAMETERS		HOUSE 1 ICE MAKER	HOUSE 1 BRINE CHILLER	HOUSE 2 ICE MAKER	HOUSE 2 BRINE CHILLER	HOUSE 3 ICE MAKER	HOUSE 3 BRINE CHILLER	HOUSE 4 ICE MAKER	HOUSE 4 BRINE CHILLER
	VOLUME OF ICE BIN, FT3	V					1121	603	1220	655
	AREA OF PANEL, FT2	A					* 3211	* 3011	* 9631	* 9721
FULL	LENGTH OF ICE BIN COIL, FT	L					0	502	0	900
	USAGE OF ELECTRICITY, KWH/YR	U					8231	8374	16423	16424
	EFFICIENCY (ANNUAL COP)	E					2.87	2.82	2.82	2.82
	VOLUME OF ICE BIN, FT3	V					1202	622	1909	977
	AREA OF PANEL, FT2	A					* 2978	* 2943	* 7394	* 7290
PARTIAL	LENGTH OF ICE BIN COIL, FT	L					0	504	0	947
	USAGE OF ELECTRICITY, KWH/YR	U					8238	8310	16457	16597
	EFFICIENCY (ANNUAL COP)	E					2.86	2.84	2.81	2.79
	VOLUME OF ICE BIN, FT3	V	2171	1085	4357	2178	1282	641	2598	1299
	AREA OF PANEL, FT2	A	* 4723	* 4879	* 9062	* 10306	* 2785	* 2874	* 5637	* 5825
MINIMUM	LENGTH OF ICE BIN COIL, FT	L	0	816	0	1596	0	506	0	982
	USAGE OF ELECTRICITY, KWH/YR	U	15021	15143	31577	31570	8239	8310	16610	16756
	EFFICIENCY (ANNUAL COP)	E	2.71	2.69	2.59	2.59	2.86	2.84	2.79	2.76

*UNGLAZED PANEL EXCEEDS A PRACTICAL SIZE, AN ALTERNATIVE SUPPLEMENTARY HEAT SOURCE SHOULD BE USED IN THIS DESIGN.

INTERNATIONAL FALLS, MINNESOTA

GEOGRAPHICAL ZONE	= H	LATITUDE (DEG)	= 48.6	GROUND	AO = 37.23 F	AIR TEMP:	OUTDOOR	INDOOR
JANUARY WIND (MPH)	= 9.0	LONGITUDE (DEG)	= 93.4	TEMPERATURE	BO = 30.54 F	WINTER	-29 F	70 F
COOLING(TOTAL/SENS.)	= 1.04	ELEVATION (FT)	= 1179.	CONSTANTS:	PO = 0.590 RAD	SUMMER	82 F	78 F

BUILDING DESIGN MONTHLY THERMAL LOADS

MONTH	R-40 INSULATION BIN HEAT LEAK COEFFICIENTS(32F)		UNGLAZED PANEL HEAT	DOMESTIC WATER HEAT	MEDIUM INSULATION				HIGH INSULATION			
					HOUSE 1 1200 FT2		HOUSE 2 2400 FT2		HOUSE 3 1200 FT2		HOUSE 4 2400 FT2	
(M)	TB(M)	SD(M)	PAN(M)	QHW(M)	QH(M)	QC(M)	QH(M)	QC(M)	QH(M)	QC(M)	QH(M)	QC(M)
	MBTU/FT2		MBTU/FT2	MBTU	MBTU	MBTU	MBTU	MBTU	MBTU	MBTU	MBTU	MBTU
JAN	-0.383	-0.150	1.28	1560	23420	0	48400	0	13120	0	28020	0
FEB	-0.397	-0.190	5.33	1410	19040	0	39700	0	9880	0	21530	0
MAR	-0.334	-0.195	23.41	1570	15880	0	33940	0	7040	0	16190	0
APR	-0.089	-0.099	46.72	1530	10350	0	23060	0	3940	0	9720	0
MAY	0.236	0.047	81.28	1590	5660	0	13470	0	1720	720	5080	1030
JUN	0.526	0.199	101.92	1550	2630	1000	7050	0	430	1860	2080	2690
JUL	0.765	0.339	112.23	1610	1370	1930	4470	2580	0	2950	1050	4110
AUG	0.828	0.406	109.67	1610	1320	1810	4350	2440	0	2680	1240	3730
SEP	0.698	0.376	79.89	1550	3310	0	8410	0	1130	680	3760	960
OCT	0.468	0.292	59.67	1590	6150	0	14610	0	2410	0	6670	0
NOV	0.144	0.141	14.38	1530	13060	0	28190	0	6560	0	15280	0
DEC	-0.167	-0.018	4.46	1570	19940	0	41620	0	10980	0	23880	0
ANNUAL THERMAL LOADS (MBTU)				18670	122130	4740	267270	5020	57210	8890	134500	12520
DESIGN HOURLY THERMAL LOADS (BTU/HR)					66374	6341	129308	6875	41964	12680	80918	18967

CALCULATED ACES DESIGNS

ACES SIZE	SYSTEM DESIGN PARAMETERS		HOUSE 1 ICE MAKER	HOUSE 1 BRINE CHILLER	HOUSE 2 ICE MAKER	HOUSE 2 BRINE CHILLER	HOUSE 3 ICE MAKER	HOUSE 3 BRINE CHILLER	HOUSE 4 ICE MAKER	HOUSE 4 BRINE CHILLER
	VOLUME OF ICE BIN, FT3	V					1426	766	1662	900
	AREA OF PANEL, FT2	A					* 3067	* 3130	* 10218	* 10298
FULL	LENGTH OF ICE BIN COIL, FT	L					0	568	0	1029
	USAGE OF ELECTRICITY, KWH/YR	U					8542	8542	16677	17015
	EFFICIENCY (ANNUAL COP)	E					2.91	2.91	2.91	2.85
	VOLUME OF ICE BIN, FT3	V					1393	723	2201	1135
	AREA OF PANEL, FT2	A					* 3155	* 3405	* 8369	* 8835
PARTIAL	LENGTH OF ICE BIN COIL, FT	L					0	564	0	1060
	USAGE OF ELECTRICITY, KWH/YR	U					8542	8539	16937	16934
	EFFICIENCY (ANNUAL COP)	E					2.91	2.91	2.87	2.87
	VOLUME OF ICE BIN, FT3	V	2313	1156	4626	2313	1360	680	2739	1369
	AREA OF PANEL, FT2	A	* 5512	* 6230	* 10965	* 12419	* 3258	* 3675	* 6518	* 7371
MINIMUM	LENGTH OF ICE BIN COIL, FT	L	0	894	0	1747	0	560	0	1086
	USAGE OF ELECTRICITY, KWH/YR	U	15472	15466	32868	32861	8541	8468	16949	16943
	EFFICIENCY (ANNUAL COP)	E	2.76	2.76	2.59	2.59	2.91	2.93	2.86	2.87

*UNGLAZED PANEL EXCEEDS A PRACTICAL SIZE, AN ALTERNATIVE SUPPLEMENTARY HEAT SOURCE SHOULD BE USED IN THIS DESIGN.

MINNEAPOLIS, MINNESOTA

GEOGRAPHICAL ZONE	= H	LATITUDE (DEG)	= 44.9	GROUND	AO = 45.27 F	AIR TEMP:	OUTDOOR	INDOOR
JANUARY WIND (MPH)	= 11.0	LONGITUDE (DEG)	= 93.2	TEMPERATURE	BO = 29.22 F	WINTER	-16 F	70 F
COOLING(TOTAL/SENS.)	= 1.09	ELEVATION (FT)	= 834.	CONSTANTS:	PO = 0.602 RAD	SUMMER	89 F	78 F

BUILDING DESIGN MONTHLY THERMAL LOADS

MONTH	R-40 INSULATION BIN HEAT LEAK COEFFICIENTS(32F)		UNGLAZED PANEL HEAT	DOMESTIC WATER HEAT	MEDIUM INSULATION				HIGH INSULATION			
					HOUSE 1 1200 FT2		HOUSE 2 2400 FT2		HOUSE 3 1200 FT2		HOUSE 4 2400 FT2	
(M)	TB(M) MBTU/FT2	SD(M) MBTU/FT2	PAN(M) MBTU/FT2	QHW(M) MBTU	QH(M) MBTU	QC(M) MBTU	QH(M) MBTU	QC(M) MBTU	QH(M) MBTU	QC(M) MBTU	QH(M) MBTU	QC(M) MBTU
JAN	-0.056	0.012	4.29	1500	18510	0	38860	0	10030	0	22090	0
FEB	-0.103	-0.042	12.77	1420	14950	0	31730	0	7410	0	16750	0
MAR	-0.016	-0.034	32.80	1610	12750	0	27830	0	5560	0	13220	0
APR	0.206	0.051	71.15	1550	7090	0	16490	0	2530	0	6760	0
MAY	0.526	0.195	113.19	1550	3240	680	8450	0	720	1350	2800	1930
JUN	0.795	0.336	133.90	1430	950	1880	3380	2520	0	2950	0	3980
JUL	1.036	0.476	138.56	1380	0	3090	1250	4510	0	4460	0	5810
AUG	1.100	0.542	137.41	1310	0	3170	1010	4580	0	4330	0	5740
SEP	0.969	0.510	106.35	1230	1330	1180	4150	1560	330	1660	1700	2290
OCT	0.762	0.435	79.65	1280	3600	0	9270	0	1330	490	4280	0
NOV	0.443	0.287	27.59	1290	9590	0	21410	0	4630	0	11460	0
DEC	0.154	0.140	9.46	1410	15280	0	32560	0	8120	0	18390	0
ANNUAL THERMAL LOADS (MBTU)				16960	87290	10000	196390	13170	40660	15240	97450	19750
DESIGN HOURLY THERMAL LOADS (BTU/HR)					55195	12819	107403	18930	34834	16546	67053	26099

CALCULATED ACES DESIGNS

ACES SIZE	SYSTEM DESIGN PARAMETERS		HOUSE 1 ICE MAKER	HOUSE 1 BRINE CHILLER	HOUSE 2 ICE MAKER	HOUSE 2 BRINE CHILLER	HOUSE 3 ICE MAKER	HOUSE 3 BRINE CHILLER	HOUSE 4 ICE MAKER	HOUSE 4 BRINE CHILLER
FULL	VOLUME OF ICE BIN, FT3	V					3508	1803	4699	2421
	AREA OF PANEL, FT2	A					200	218	762	795
	LENGTH OF ICE BIN COIL, FT	L					0	536	0	988
	USAGE OF ELECTRICITY, KWH/YR	U					6943	6961	13375	13408
	EFFICIENCY (ANNUAL COP)	E					3.07	3.07	2.94	2.93
PARTIAL	VOLUME OF ICE BIN, FT3	V					2288	1168	3441	1757
	AREA OF PANEL, FT2	A					368	388	1054	1113
	LENGTH OF ICE BIN COIL, FT	L					0	509	0	950
	USAGE OF ELECTRICITY, KWH/YR	U					7449	7458	13865	14098
	EFFICIENCY (ANNUAL COP)	E					2.87	2.86	2.83	2.79
MINIMUM	VOLUME OF ICE BIN, FT3	V	1853	926	3737	1868	1068	534	2184	1092
	AREA OF PANEL, FT2	A	*1415	*1555	*2863	*3145	*813	*894	*1672	*1837
	LENGTH OF ICE BIN COIL, FT	L	0	740	0	1446	0	461	0	895
	USAGE OF ELECTRICITY, KWH/YR	U	11953	12049	24294	24036	8029	8023	14475	14676
	EFFICIENCY (ANNUAL COP)	E	2.80	2.78	2.73	2.76	2.66	2.66	2.72	2.68

*UNGLAZED PANEL EXCEEDS A PRACTICAL SIZE, AN ALTERNATIVE SUPPLEMENTARY HEAT SOURCE SHOULD BE USED IN THIS DESIGN.

BILOXI, MISSISSIPPI

GEOGRAPHICAL ZONE	= E	LATITUDE (DEG)	= 30.4	GROUND	AO = 67.83 F	AIR TEMP:	OUTDOOR	INDOOR
JANUARY WIND (MPH)	= 12.0	LONGITUDE (DEG)	= 88.9	TEMPERATURE	BO = 16.35 F	WINTER	28 F	70 F
COOLING(TOTAL/SENS.)	= 1.31	ELEVATION (FT)	= 26.	CONSTANTS:	PO = 0.550 RAD	SUMMER	92 F	78 F

BUILDING DESIGN MONTHLY THERMAL LOADS

MONTH	R-40 INSULATION BIN HEAT LEAK COEFFICIENTS(32F)		UNGLAZED PANEL HEAT	DOMESTIC WATER HEAT	MEDIUM INSULATION				HIGH INSULATION			
					HOUSE 1 1200 FT2		HOUSE 2 2400 FT2		HOUSE 3 1200 FT2		HOUSE 4 2400 FT2	
(M)	TB(M)	SD(M)	PAN(M)	QHW(M)	QH(M)	QC(M)	QH(M)	QC(M)	QH(M)	QC(M)	QH(M)	QC(M)
	MBTU/FT2		MBTU/FT2	MBTU	MBTU	MBTU	MBTU	MBTU	MBTU	MBTU	MBTU	MBTU
JAN	1.018	0.530	78.22	1270	3190	0	8400	0	1330	290	4230	0
FEB	0.898	0.452	83.60	1150	2180	0	6080	0	780	630	2760	690
MAR	1.058	0.513	112.64	1200	1390	680	4450	0	380	1210	1760	1450
APR	1.153	0.546	134.18	1050	0	2200	1250	2900	0	3410	0	4320
MAY	1.369	0.646	153.52	960	0	4340	0	5580	0	5480	0	7360
JUN	1.481	0.707	149.00	820	0	6430	0	9050	0	6740	0	9700
JUL	1.644	0.800	147.95	790	0	7850	0	11630	0	7610	0	11270
AUG	1.671	0.833	149.15	800	0	7870	0	11670	0	7460	0	11000
SEP	1.555	0.794	147.11	840	0	6340	0	8860	0	6260	0	8880
OCT	1.467	0.765	129.95	980	0	3460	0	4760	0	3890	0	5200
NOV	1.253	0.664	108.68	1070	840	1250	2800	1580	0	1690	1500	2130
DEC	1.129	0.599	83.09	1220	2170	0	6130	0	920	530	3170	0
ANNUAL THERMAL LOADS (MBTU)				12150	9770	40420	29110	56030	3410	45200	13420	62000
DESIGN HOURLY THERMAL LOADS (BTU/HR)					21167	21828	40875	37939	13966	19435	26654	33760

CALCULATED ACES DESIGNS

ACES SIZE	SYSTEM DESIGN PARAMETERS		HOUSE 1 ICE MAKER	HOUSE 1 BRINE CHILLER	HOUSE 2 ICE MAKER	HOUSE 2 BRINE CHILLER	HOUSE 3 ICE MAKER	HOUSE 3 BRINE CHILLER	HOUSE 4 ICE MAKER	HOUSE 4 BRINE CHILLER
	VOLUME OF ICE BIN, FT3	V	1525	900	3722	2197	477	280	1591	927
	AREA OF PANEL, FT2	A	0	0	0	0	0	0	0	0
FULL	LENGTH OF ICE BIN COIL, FT	L	0	318	0	632	0	191	0	391
	USAGE OF ELECTRICITY, KWH/YR	U	8561	8564	12540	12557	9123	9122	12915	12631
	EFFICIENCY (ANNUAL COP)	E	2.13	2.13	2.27	2.27	1.95	1.95	1.99	2.03
	VOLUME OF ICE BIN, FT3	V	969	553	2309	1322	359	201	1051	591
	AREA OF PANEL, FT2	A	0	0	19	20	0	0	10	11
PARTIAL	LENGTH OF ICE BIN COIL, FT	L	0	300	0	594	0	183	0	370
	USAGE OF ELECTRICITY, KWH/YR	U	9124	9134	13828	13855	9299	9300	13380	13380
	EFFICIENCY (ANNUAL COP)	E	2.00	2.00	2.06	2.06	1.91	1.91	1.92	1.92
	VOLUME OF ICE BIN, FT3	V	413	206	896	448	242	121	510	255
	AREA OF PANEL, FT2	A	19	21	44	46	0	0	23	25
MINIMUM	LENGTH OF ICE BIN COIL, FT	L	0	264	0	519	0	172	0	332
	USAGE OF ELECTRICITY, KWH/YR	U	9329	9331	14404	14527	9408	9403	13663	13658
	EFFICIENCY (ANNUAL COP)	E	1.96	1.96	1.98	1.96	1.89	1.89	1.88	1.88

COLUMBUS, MISSISSIPPI

GEOGRAPHICAL ZONE	= D	LATITUDE (DEG)	= 33.6	GROUND	AO = 62.63 F	AIR TEMP:	OUTDOOR	INDOOR
JANUARY WIND (MPH)	= 12.0	LONGITUDE (DEG)	= 88.4	TEMPERATURE	BO = 19.37 F	WINTER	15 F	70 F
COOLING(TOTAL/SENS.)	= 1.21	ELEVATION (FT)	= 219.	CONSTANTS:	PO = 0.511 RAD	SUMMER	95 F	78 F

BUILDING DESIGN MONTHLY THERMAL LOADS

MONTH (M)	R-40 INSULATION BIN HEAT LEAK COEFFICIENTS(32F) TB(M) MBTU/FT2	SD(M) MBTU/FT2	UNGLAZED PANEL HEAT PAN(M) MBTU/FT2	DOMESTIC WATER HEAT QHW(M) MBTU	MEDIUM INSULATION HOUSE 1 1200 FT2 QH(M) MBTU	QC(M) MBTU	HOUSE 2 2400 FT2 QH(M) MBTU	QC(M) MBTU	HIGH INSULATION HOUSE 3 1200 FT2 QH(M) MBTU	QC(M) MBTU	HOUSE 4 2400 FT2 QH(M) MBTU	QC(M) MBTU
JAN	0.761	0.404	57.90	1420	6010	0	14300	0	2700	0	7270	0
FEB	0.668	0.337	67.82	1270	4340	0	10660	0	1740	0	5000	0
MAR	0.822	0.390	96.00	1320	3260	0	8470	0	1130	850	3700	1140
APR	0.955	0.440	122.15	1150	1200	1460	3870	1950	0	2180	1320	2920
MAY	1.197	0.553	145.60	1030	0	3380	1230	4890	0	4440	0	5960
JUN	1.342	0.632	148.84	880	0	5260	0	7070	0	5990	0	8340
JUL	1.514	0.732	149.14	840	0	6700	0	9460	0	6960	0	9990
AUG	1.537	0.767	151.14	850	0	6790	0	9600	0	6890	0	9870
SEP	1.408	0.724	140.09	910	0	4630	0	6440	0	5050	0	6880
OCT	1.283	0.680	116.09	1080	760	2250	2630	3220	0	2640	1340	3640
NOV	1.044	0.566	87.69	1180	2470	540	6560	0	1110	790	3540	1070
DEC	0.885	0.482	58.33	1350	5150	0	12540	0	2370	0	6560	0
ANNUAL THERMAL LOADS (MBTU)				13280	23190	31010	60260	42630	9050	35790	28730	49810
DESIGN HOURLY THERMAL LOADS (BTU/HR)					30149	22710	58388	37535	19508	20890	37344	35960

CALCULATED ACES DESIGNS

ACES SIZE	SYSTEM DESIGN PARAMETERS		HOUSE 1 ICE MAKER	HOUSE 1 BRINE CHILLER	HOUSE 2 ICE MAKER	HOUSE 2 BRINE CHILLER	HOUSE 3 ICE MAKER	HOUSE 3 BRINE CHILLER	HOUSE 4 ICE MAKER	HOUSE 4 BRINE CHILLER
	VOLUME OF ICE BIN, FT3	V	3309	1954	7498	4479	1525	904	3578	2099
	AREA OF PANEL, FT2	A	0	0	0	0	0	0	0	0
FULL	LENGTH OF ICE BIN COIL, FT	L	0	476	0	941	0	296	0	580
	USAGE OF ELECTRICITY, KWH/YR	U	7559	7316	11615	11269	7693	7537	11155	11180
	EFFICIENCY (ANNUAL COP)	E	2.62	2.70	2.93	3.02	2.21	2.26	2.41	2.41
	VOLUME OF ICE BIN, FT3	V	1998	1149	4476	2603	953	547	2191	1250
	AREA OF PANEL, FT2	A	20	20	43	42	12	12	23	23
PARTIAL	LENGTH OF ICE BIN COIL, FT	L	0	447	0	883	0	278	0	545
	USAGE OF ELECTRICITY, KWH/YR	U	8587	8396	13820	13503	8201	8123	12208	12232
	EFFICIENCY (ANNUAL COP)	E	2.30	2.35	2.46	2.52	2.08	2.10	2.20	2.20
	VOLUME OF ICE BIN, FT3	V	688	344	1455	727	381	190	804	402
	AREA OF PANEL, FT2	A	49	52	106	113	27	29	59	63
MINIMUM	LENGTH OF ICE BIN COIL, FT	L	0	384	0	753	0	244	0	473
	USAGE OF ELECTRICITY, KWH/YR	U	9139	9127	15175	15152	8397	8392	13019	13008
	EFFICIENCY (ANNUAL COP)	E	2.16	2.17	2.24	2.25	2.03	2.03	2.07	2.07

JACKSON, MISSISSIPPI

GEOGRAPHICAL ZONE = D	LATITUDE (DEG) = 32.3	GROUND	AO = 64.40 F	AIR TEMP:	OUTDOOR	INDOOR
JANUARY WIND (MPH) = 9.0	LONGITUDE (DEG) = 90.1	TEMPERATURE	BO = 17.74 F	WINTER	21 F	70 F
COOLING(TOTAL/SENS.) = 1.21	ELEVATION (FT) = 310.	CONSTANTS:	PO = 0.535 RAD	SUMMER	96 F	78 F

BUILDING DESIGN MONTHLY THERMAL LOADS

MONTH	R-40 INSULATION BIN HEAT LEAK COEFFICIENTS(32F)		UNGLAZED PANEL HEAT	DOMESTIC WATER HEAT	MEDIUM INSULATION				HIGH INSULATION			
					HOUSE 1 1200 FT2		HOUSE 2 2400 FT2		HOUSE 3 1200 FT2		HOUSE 4 2400 FT2	
(M)	TB(M)	SD(M)	PAN(M)	QHW(M)	QH(M)	QC(M)	QH(M)	QC(M)	QH(M)	QC(M)	QH(M)	QC(M)
	MBTU/FT2		MBTU/FT2	MBTU	MBTU	MBTU	MBTU	MBTU	MBTU	MBTU	MBTU	MBTU
JAN	0.862	0.453	57.11	1360	4770	0	11730	0	2030	0	5810	0
FEB	0.757	0.382	70.08	1220	3230	0	8310	0	1190	530	3760	0
MAR	0.910	0.437	93.64	1270	2620	600	7040	0	870	1030	3050	1370
APR	1.023	0.478	112.88	1120	950	1700	3210	2310	0	2450	1090	3170
MAY	1.250	0.583	132.70	1010	0	3510	0	5030	0	4640	0	6130
JUN	1.379	0.653	130.36	870	0	5370	0	7120	0	6010	0	8330
JUL	1.545	0.749	141.33	830	0	7110	0	10060	0	7230	0	10480
AUG	1.571	0.783	142.13	840	0	6940	0	9800	0	6910	0	9900
SEP	1.451	0.743	136.66	890	0	5080	0	6990	0	5370	0	7360
OCT	1.345	0.707	113.70	1040	0	2560	1740	3590	0	3000	890	4000
NOV	1.121	0.601	80.75	1140	2040	660	5610	0	870	960	3020	1240
DEC	0.979	0.527	64.68	1300	3640	0	9300	0	1570	0	4750	0
ANNUAL THERMAL LOADS (MBTU)				12890	17250	33530	46940	44900	6530	38130	22370	51980
DESIGN HOURLY THERMAL LOADS (BTU/HR)					26146	23223	50590	38563	16940	21020	32389	36156

CALCULATED ACES DESIGNS

ACES SIZE	SYSTEM DESIGN PARAMETERS		HOUSE 1 ICE MAKER	HOUSE 1 BRINE CHILLER	HOUSE 2 ICE MAKER	HOUSE 2 BRINE CHILLER	HOUSE 3 ICE MAKER	HOUSE 3 BRINE CHILLER	HOUSE 4 ICE MAKER	HOUSE 4 BRINE CHILLER
	VOLUME OF ICE BIN, FT3	V	2434	1445	5980	3539	983	571	2670	1583
	AREA OF PANEL, FT2	A	0	0	0	0	0	0	0	0
FULL	LENGTH OF ICE BIN COIL, FT	L	0	405	0	806	0	247	0	495
	USAGE OF ELECTRICITY, KWH/YR	U	7677	7692	11605	11232	7934	7938	11385	11073
	EFFICIENCY (ANNUAL COP)	E	2.43	2.43	2.64	2.73	2.13	2.12	2.25	2.31
	VOLUME OF ICE BIN, FT3	V	1501	864	3596	2072	649	364	1667	957
	AREA OF PANEL, FT2	A	14	14	34	34	0	0	18	18
PARTIAL	LENGTH OF ICE BIN COIL, FT	L	0	381	0	757	0	234	0	466
	USAGE OF ELECTRICITY, KWH/YR	U	8646	8445	13376	13128	8275	8283	12260	12276
	EFFICIENCY (ANNUAL COP)	E	2.16	2.21	2.29	2.34	2.04	2.04	2.08	2.08
	VOLUME OF ICE BIN, FT3	V	567	283	1212	606	314	157	664	332
	AREA OF PANEL, FT2	A	36	38	78	84	20	22	43	47
MINIMUM	LENGTH OF ICE BIN COIL, FT	L	0	331	0	650	0	210	0	407
	USAGE OF ELECTRICITY, KWH/YR	U	8933	8923	14286	14267	8399	8397	12467	12637
	EFFICIENCY (ANNUAL COP)	E	2.09	2.09	2.15	2.15	2.01	2.01	2.05	2.02

COLUMBIA, MISSOURI

GEOGRAPHICAL ZONE	= I	LATITUDE (DEG)	= 39.0	GROUND	AO = 54.88 F	AIR TEMP:	OUTDOOR INDOOR
JANUARY WIND (MPH)	= 11.0	LONGITUDE (DEG)	= 92.4	TEMPERATURE	BO = 24.36 F	WINTER	-1 F 70 F
COOLING(TOTAL/SENS.)	= 1.12	ELEVATION (FT)	= 778.	CONSTANTS:	PO = 0.598 RAD	SUMMER	94 F 78 F

BUILDING DESIGN MONTHLY THERMAL LOADS

MONTH	R-40 INSULATION BIN HEAT LEAK COEFFICIENTS(32F)		UNGLAZED PANEL HEAT	DOMESTIC WATER HEAT	MEDIUM INSULATION HOUSE 1 1200 FT2		MEDIUM INSULATION HOUSE 2 2400 FT2		HIGH INSULATION HOUSE 3 1200 FT2		HIGH INSULATION HOUSE 4 2400 FT2	
(M)	TB(M)	SD(M)	PAN(M)	QHW(M)	QH(M)	QC(M)	QH(M)	QC(M)	QH(M)	QC(M)	QH(M)	QC(M)
	MBTU/FT2		MBTU/FT2	MBTU	MBTU	MBTU	MBTU	MBTU	MBTU	MBTU	MBTU	MBTU
JAN	0.392	0.229	25.72	1600	11390	0	25020	0	5580	0	13350	0
FEB	0.312	0.163	36.44	1450	8750	0	19610	0	3860	0	9600	0
MAR	0.427	0.192	61.77	1530	7660	0	17630	0	3160	0	8170	0
APR	0.599	0.256	98.51	1340	3580	0	9110	0	1090	1000	3550	1410
MAY	0.880	0.384	125.01	1200	1280	1720	4160	2340	0	2590	1180	3520
JUN	1.090	0.494	137.17	1010	0	3440	1030	4900	0	4600	0	6080
JUL	1.304	0.617	145.46	940	0	4960	0	7130	0	6020	0	8350
AUG	1.357	0.671	146.21	930	0	5120	0	7030	0	5770	0	7920
SEP	1.232	0.637	129.78	970	0	3030	1190	4340	0	3550	0	4820
OCT	1.072	0.582	108.72	1160	1540	1120	4630	1590	530	1480	2200	2100
NOV	0.792	0.451	66.36	1290	4970	0	11980	0	2300	0	6310	0
DEC	0.566	0.335	34.42	1500	9100	0	20480	0	4370	0	10930	0
ANNUAL THERMAL LOADS (MBTU)				14920	48270	19390	114840	27330	20890	25010	55290	34200
DESIGN HOURLY THERMAL LOADS (BTU/HR)					42184	18701	81902	28605	26992	18860	51826	30972

CALCULATED ACES DESIGNS

ACES SIZE	SYSTEM DESIGN PARAMETERS		HOUSE 1 ICE MAKER	HOUSE 1 BRINE CHILLER	HOUSE 2 ICE MAKER	HOUSE 2 BRINE CHILLER	HOUSE 3 ICE MAKER	HOUSE 3 BRINE CHILLER	HOUSE 4 ICE MAKER	HOUSE 4 BRINE CHILLER
	VOLUME OF ICE BIN, FT3	V	5705	2748	7046	3566	3555	2096	7850	4509
	AREA OF PANEL, FT2	A	23	42	161	177	0	0	0	0
FULL	LENGTH OF ICE BIN COIL, FT	L	0	667	0	1235	0	435	0	847
	USAGE OF ELECTRICITY, KWH/YR	U	7976	7981	16016	15945	6315	6105	9755	9131
	EFFICIENCY (ANNUAL COP)	E	3.03	3.03	2.87	2.89	2.82	2.92	3.14	3.35
	VOLUME OF ICE BIN, FT3	V	3454	1675	4755	2399	2110	1214	4617	2601
	AREA OF PANEL, FT2	A	75	87	244	263	34	32	68	67
PARTIAL	LENGTH OF ICE BIN COIL, FT	L	0	629	0	1177	0	408	0	794
	USAGE OF ELECTRICITY, KWH/YR	U	8696	8911	16831	16846	7196	7220	11398	11451
	EFFICIENCY (ANNUAL COP)	E	2.78	2.72	2.73	2.73	2.48	2.47	2.68	2.67
	VOLUME OF ICE BIN, FT3	V	1203	601	2464	1232	665	332	1384	692
	AREA OF PANEL, FT2	A	166	176	344	365	91	97	193	205
MINIMUM	LENGTH OF ICE BIN COIL, FT	L	0	554	0	1083	0	348	0	675
	USAGE OF ELECTRICITY, KWH/YR	U	9735	9725	17873	17855	7815	7808	12958	12944
	EFFICIENCY (ANNUAL COP)	E	2.49	2.49	2.58	2.58	2.28	2.28	2.36	2.36

KANSAS CITY, MISSOURI

GEOGRAPHICAL ZONE	= I	LATITUDE (DEG)	= 39.1	GROUND	AO = 56.33 F	AIR TEMP:	OUTDOOR	INDOOR
JANUARY WIND (MPH)	= 10.0	LONGITUDE (DEG)	= 94.6	TEMPERATURE	BO = 25.47 F	WINTER	2 F	70 F
COOLING(TOTAL/SENS.)	= 1.13	ELEVATION (FT)	= 791.	CONSTANTS:	PO = 0.607 RAD	SUMMER	96 F	78 F

BUILDING DESIGN MONTHLY THERMAL LOADS

MONTH	R-40 INSULATION BIN HEAT LEAK COEFFICIENTS(32F)		UNGLAZED PANEL HEAT	DOMESTIC WATER HEAT	MEDIUM INSULATION				HIGH INSULATION			
					HOUSE 1 1200 FT2		HOUSE 2 2400 FT2		HOUSE 3 1200 FT2		HOUSE 4 2400 FT2	
(M)	TB(M)	SD(M)	PAN(M)	QHW(M)	QH(M)	QC(M)	QH(M)	QC(M)	QH(M)	QC(M)	QH(M)	QC(M)
	MBTU/FT2		MBTU/FT2	MBTU	MBTU	MBTU	MBTU	MBTU	MBTU	MBTU	MBTU	MBTU
JAN	0.427	0.249	24.86	1590	11080	0	24400	0	5410	0	13000	0
FEB	0.339	0.178	35.71	1440	8550	0	19230	0	3770	0	9420	0
MAR	0.459	0.207	60.00	1520	7310	0	16960	0	2940	0	7740	0
APR	0.637	0.273	99.87	1320	3250	0	8420	0	950	960	3210	1310
MAY	0.931	0.406	134.63	1180	930	1710	3270	2290	0	2670	880	3550
JUN	1.150	0.521	150.44	970	0	3800	0	5300	0	4950	0	6550
JUL	1.377	0.652	161.63	900	0	5820	0	8230	0	6610	0	9320
AUG	1.434	0.709	162.62	880	0	6010	0	8580	0	6340	0	8910
SEP	1.306	0.675	131.84	930	0	3220	0	4460	0	3680	0	4870
OCT	1.141	0.618	102.80	1120	1080	1110	3480	1490	340	1520	1630	2010
NOV	0.848	0.481	61.65	1270	4520	0	11100	0	2040	0	5800	0
DEC	0.611	0.361	31.72	1480	8660	0	19650	0	4130	0	10470	0
ANNUAL THERMAL LOADS (MBTU)				14600	45380	21670	106510	30350	19580	26730	52150	36520
DESIGN HOURLY THERMAL LOADS (BTU/HR)					40159	20346	77957	33475	25601	19540	49134	32532

CALCULATED ACES DESIGNS

ACES SIZE	SYSTEM DESIGN PARAMETERS		HOUSE 1		HOUSE 2		HOUSE 3		HOUSE 4	
			ICE MAKER	BRINE CHILLER	ICE MAKER	BRINE CHILLER	ICE MAKER	BRINE CHILLER	ICE MAKER	BRINE CHILLER
	VOLUME OF ICE BIN, FT3	V	6877	3313	9097	4384	3376	1993	7483	4310
	AREA OF PANEL, FT2	A	0	17	106	138	0	0	0	0
FULL	LENGTH OF ICE BIN COIL, FT	L	0	652	0	1212	0	413	0	804
	USAGE OF ELECTRICITY, KWH/YR	U	7227	7730	15172	15210	6617	6374	9870	9568
	EFFICIENCY (ANNUAL COP)	E	3.31	3.09	2.92	2.92	2.70	2.80	3.07	3.16
	VOLUME OF ICE BIN, FT3	V	4025	1950	5751	2793	2012	1158	4417	2493
	AREA OF PANEL, FT2	A	58	72	197	228	34	33	69	68
PARTIAL	LENGTH OF ICE BIN COIL, FT	L	0	613	0	1148	0	387	0	754
	USAGE OF ELECTRICITY, KWH/YR	U	8729	8731	16250	16599	7307	7325	11698	11747
	EFFICIENCY (ANNUAL COP)	E	2.74	2.74	2.73	2.67	2.44	2.44	2.59	2.58
	VOLUME OF ICE BIN, FT3	V	1173	586	2406	1203	648	324	1350	675
	AREA OF PANEL, FT2	A	169	180	353	376	92	99	198	211
MINIMUM	LENGTH OF ICE BIN COIL, FT	L	0	529	0	1034	0	331	0	642
	USAGE OF ELECTRICITY, KWH/YR	U	9875	9887	17787	17766	7989	8066	13073	13060
	EFFICIENCY (ANNUAL COP)	E	2.42	2.42	2.49	2.50	2.23	2.21	2.31	2.32

SPRINGFIELD, MISSOURI

GEOGRAPHICAL ZONE	= I	LATITUDE (DEG)	= 37.2	GROUND	AO = 55.58 F	AIR TEMP:	OUTDOOR	INDOOR
JANUARY WIND (MPH)	= 13.0	LONGITUDE (DEG)	= 93.4	TEMPERATURE	BO = 23.19 F	WINTER	3 F	70 F
COOLING(TOTAL/SENS.)	= 1.16	ELEVATION (FT)	= 1268.	CONSTANTS:	PO = 0.585 RAD	SUMMER	94 F	78 F

BUILDING DESIGN MONTHLY THERMAL LOADS

MONTH	R-40 INSULATION BIN HEAT LEAK COEFFICIENTS(32F)		UNGLAZED PANEL HEAT	DOMESTIC WATER HEAT	MEDIUM INSULATION				HIGH INSULATION			
					HOUSE 1 1200 FT2		HOUSE 2 2400 FT2		HOUSE 3 1200 FT2		HOUSE 4 2400 FT2	
(M)	TB(M) MBTU/FT2	SD(M) MBTU/FT2	PAN(M) MBTU/FT2	QHW(M) MBTU	QH(M) MBTU	QC(M) MBTU	QH(M) MBTU	QC(M) MBTU	QH(M) MBTU	QC(M) MBTU	QH(M) MBTU	QC(M) MBTU
JAN	0.437	0.250	30.79	1600	10860	0	23960	0	5380	0	12920	0
FEB	0.357	0.185	40.45	1440	8520	0	19160	0	3850	0	9580	0
MAR	0.477	0.217	71.05	1500	7070	0	16410	0	2910	0	7650	0
APR	0.641	0.278	112.25	1300	3160	0	8230	0	930	1150	3170	1620
MAY	0.911	0.402	138.80	1160	1080	1860	3800	2570	0	2790	1020	3760
JUN	1.107	0.505	156.81	970	0	3360	1040	4840	0	4560	0	5910
JUL	1.311	0.623	161.88	910	0	4910	0	7110	0	6100	0	8470
AUG	1.358	0.673	162.92	920	0	5160	0	7070	0	5820	0	8060
SEP	1.234	0.638	143.50	970	0	3080	1040	4390	0	3690	0	4940
OCT	1.082	0.585	119.69	1170	1460	1270	4460	1780	530	1640	2130	2330
NOV	0.813	0.459	68.24	1300	4900	0	11830	0	2300	0	6300	0
DEC	0.601	0.350	38.07	1510	8850	0	20010	0	4330	0	10820	0
ANNUAL THERMAL LOADS (MBTU)				14750	45900	19640	109940	27760	20230	25750	53590	35090
DESIGN HOURLY THERMAL LOADS (BTU/HR)					39612	19198	76896	28997	25168	19290	48299	31983

CALCULATED ACES DESIGNS

ACES SIZE	SYSTEM DESIGN PARAMETERS		HOUSE 1 ICE MAKER	HOUSE 1 BRINE CHILLER	HOUSE 2 ICE MAKER	HOUSE 2 BRINE CHILLER	HOUSE 3 ICE MAKER	HOUSE 3 BRINE CHILLER	HOUSE 4 ICE MAKER	HOUSE 4 BRINE CHILLER
	VOLUME OF ICE BIN, FT3	V	5920	2847	7217	3593	3459	1996	7532	4338
	AREA OF PANEL, FT2	A	13	28	129	145	0	0	0	0
FULL	LENGTH OF ICE BIN COIL, FT	L	0	633	0	1169	0	407	0	792
	USAGE OF ELECTRICITY, KWH/YR	U	7703	7722	15459	15520	6306	6325	9635	9369
	EFFICIENCY (ANNUAL COP)	E	3.05	3.05	2.89	2.88	2.82	2.81	3.14	3.23
	VOLUME OF ICE BIN, FT3	V	3537	1712	4792	2388	2053	1159	4438	2505
	AREA OF PANEL, FT2	A	60	70	203	222	29	29	60	59
PARTIAL	LENGTH OF ICE BIN COIL, FT	L	0	596	0	1113	0	382	0	743
	USAGE OF ELECTRICITY, KWH/YR	U	8400	8638	16300	16317	7190	7212	11621	11337
	EFFICIENCY (ANNUAL COP)	E	2.80	2.72	2.74	2.74	2.47	2.47	2.61	2.67
	VOLUME OF ICE BIN, FT3	V	1153	576	2366	1183	646	323	1344	672
	AREA OF PANEL, FT2	A	143	149	297	311	78	83	166	177
MINIMUM	LENGTH OF ICE BIN COIL, FT	L	0	521	0	1019	0	326	0	632
	USAGE OF ELECTRICITY, KWH/YR	U	9459	9571	17341	17328	7901	7894	12863	12849
	EFFICIENCY (ANNUAL COP)	E	2.49	2.46	2.58	2.58	2.25	2.25	2.36	2.36

BILLINGS, MONTANA

GEOGRAPHICAL ZONE	= K	LATITUDE (DEG)	= 45.8	GROUND	AO = 47.69 F	AIR TEMP:	OUTDOOR	INDOOR
JANUARY WIND (MPH)	= 13.0	LONGITUDE (DEG)	= 108.5	TEMPERATURE	BO = 23.18 F	WINTER	-15 F	70 F
COOLING(TOTAL/SENS.)	= 1.00	ELEVATION (FT)	= 3567.	CONSTANTS:	PO = 0.642 RAD	SUMMER	91 F	78 F

BUILDING DESIGN MONTHLY THERMAL LOADS

MONTH	R-40 INSULATION BIN HEAT LEAK COEFFICIENTS(32F)		UNGLAZED PANEL HEAT	DOMESTIC WATER HEAT	MEDIUM INSULATION				HIGH INSULATION			
					HOUSE 1 1200 FT2		HOUSE 2 2400 FT2		HOUSE 3 1200 FT2		HOUSE 4 2400 FT2	
(M)	TB(M) MBTU/FT2	SD(M) MBTU/FT2	PAN(M) MBTU/FT2	QHW(M) MBTU	QH(M) MBTU	QC(M) MBTU	QH(M) MBTU	QC(M) MBTU	QH(M) MBTU	QC(M) MBTU	QH(M) MBTU	QC(M) MBTU
JAN	0.156	0.112	27.45	1550	13890	0	29910	0	6980	0	16080	0
FEB	0.092	0.055	31.52	1450	11320	0	24670	0	5260	0	12370	0
MAR	0.169	0.066	49.50	1610	10280	0	22860	0	4500	0	10870	0
APR	0.333	0.127	70.41	1500	6720	0	15570	0	2620	0	6900	0
MAY	0.590	0.241	102.38	1460	3670	750	9220	0	1010	1270	3540	1880
JUN	0.800	0.351	128.26	1300	1440	1900	4480	2760	0	2630	1280	3880
JUL	1.005	0.467	151.92	1240	0	3360	1710	5120	0	4260	0	6160
AUG	1.066	0.524	147.35	1190	0	3130	1650	4720	0	3900	0	5590
SEP	0.965	0.501	113.43	1150	1630	1510	4750	2240	490	1940	2070	2860
OCT	0.813	0.449	88.44	1240	3710	0	9340	0	1480	760	4540	1100
NOV	0.556	0.330	48.53	1300	7960	0	18130	0	3800	0	9550	0
DEC	0.331	0.216	28.84	1450	11340	0	24950	0	5480	0	13240	0
ANNUAL THERMAL LOADS (MBTU)				16440	71960	10650	167240	14840	31620	14760	80440	21470
DESIGN HOURLY THERMAL LOADS (BTU/HR)					52482	12534	102011	19278	33902	15505	65218	25276

CALCULATED ACES DESIGNS

ACES SIZE	SYSTEM DESIGN PARAMETERS		HOUSE 1 ICE MAKER	HOUSE 1 BRINE CHILLER	HOUSE 2 ICE MAKER	HOUSE 2 BRINE CHILLER	HOUSE 3 ICE MAKER	HOUSE 3 BRINE CHILLER	HOUSE 4 ICE MAKER	HOUSE 4 BRINE CHILLER
FULL	VOLUME OF ICE BIN, FT3	V					3320	1707	4661	2412
	AREA OF PANEL, FT2	A					37	42	136	140
	LENGTH OF ICE BIN COIL, FT	L					0	520	0	964
	USAGE OF ELECTRICITY, KWH/YR	U					6051	6074	11826	11873
	EFFICIENCY (ANNUAL COP)	E					3.04	3.03	2.93	2.92
PARTIAL	VOLUME OF ICE BIN, FT3	V					2055	1051	3147	1614
	AREA OF PANEL, FT2	A					69	72	188	195
	LENGTH OF ICE BIN COIL, FT	L					0	490	0	918
	USAGE OF ELECTRICITY, KWH/YR	U					6541	6690	12556	12552
	EFFICIENCY (ANNUAL COP)	E					2.81	2.75	2.76	2.76
MINIMUM	VOLUME OF ICE BIN, FT3	V	1430	715	2913	1456	790	395	1632	816
	AREA OF PANEL, FT2	A	227	235	468	483	122	126	255	263
	LENGTH OF ICE BIN COIL, FT	L	0	685	0	1340	0	434	0	842
	USAGE OF ELECTRICITY, KWH/YR	U	10650	10750	21519	21515	7203	7200	12773	13357
	EFFICIENCY (ANNUAL COP)	E	2.72	2.70	2.70	2.70	2.56	2.56	2.71	2.60

GREAT FALLS, MONTANA

GEOGRAPHICAL ZONE	= K	LATITUDE (DEG)	= 47.5	GROUND	AO = 45.60 F	AIR TEMP:	OUTDOOR INDOOR
JANUARY WIND (MPH)	= 17.0	LONGITUDE (DEG)	= 111.4	TEMPERATURE	BO = 22.74 F	WINTER	-21 F 70 F
COOLING(TOTAL/SENS.)	= 1.00	ELEVATION (FT)	= 3662.	CONSTANTS:	PO = 0.628 RAD	SUMMER	87 F 78 F

BUILDING DESIGN MONTHLY THERMAL LOADS

MONTH	R-40 INSULATION BIN HEAT LEAK COEFFICIENTS(32F)		UNGLAZED PANEL HEAT	DOMESTIC WATER HEAT	MEDIUM INSULATION HOUSE 1 1200 FT2		MEDIUM INSULATION HOUSE 2 2400 FT2		HIGH INSULATION HOUSE 3 1200 FT2		HIGH INSULATION HOUSE 4 2400 FT2	
(M)	TB(M)	SD(M)	PAN(M)	QHW(M)	QH(M)	QC(M)	QH(M)	QC(M)	QH(M)	QC(M)	QH(M)	QC(M)
	MBTU/FT2		MBTU/FT2	MBTU	MBTU	MBTU	MBTU	MBTU	MBTU	MBTU	MBTU	MBTU
JAN	0.083	0.074	25.32	1530	15470	0	33020	0	8130	0	18400	0
FEB	0.030	0.023	30.47	1430	12610	0	27230	0	6140	0	14170	0
MAR	0.102	0.032	48.53	1600	11440	0	25180	0	5220	0	12290	0
APR	0.268	0.094	68.18	1530	7260	0	16780	0	2840	0	7390	0
MAY	0.519	0.207	99.93	1510	4140	0	10200	0	1240	1060	4020	1550
JUN	0.726	0.315	123.34	1390	2000	1410	5690	1950	0	2100	1820	3090
JUL	0.922	0.428	149.43	1350	780	2930	2900	4460	0	3780	0	5570
AUG	0.979	0.481	145.02	1290	750	2650	2790	3990	0	3400	0	4960
SEP	0.879	0.458	112.56	1230	2170	1150	5970	1620	700	1570	2640	2310
OCT	0.725	0.404	89.42	1290	4390	0	10810	0	1780	580	5260	0
NOV	0.474	0.288	42.17	1310	9570	0	21380	0	4780	0	11640	0
DEC	0.252	0.175	30.83	1440	13120	0	28430	0	6770	0	15750	0
ANNUAL THERMAL LOADS (MBTU)				16900	83700	8140	190380	12020	37600	12490	93380	17480
DESIGN HOURLY THERMAL LOADS (BTU/HR)					56773	10424	110384	15175	36954	14498	71140	23363

CALCULATED ACES DESIGNS

ACES SIZE	SYSTEM DESIGN PARAMETERS		HOUSE 1 ICE MAKER	HOUSE 1 BRINE CHILLER	HOUSE 2 ICE MAKER	HOUSE 2 BRINE CHILLER	HOUSE 3 ICE MAKER	HOUSE 3 BRINE CHILLER	HOUSE 4 ICE MAKER	HOUSE 4 BRINE CHILLER
FULL	VOLUME OF ICE BIN, FT3	V					2548	1321	3475	1816
	AREA OF PANEL, FT2	A					79	80	230	231
	LENGTH OF ICE BIN COIL, FT	L					0	544	0	1005
	USAGE OF ELECTRICITY, KWH/YR	U					6652	6697	13252	13279
	EFFICIENCY (ANNUAL COP)	E					2.95	2.93	2.82	2.82
PARTIAL	VOLUME OF ICE BIN, FT3	V					1721	884	2660	1369
	AREA OF PANEL, FT2	A					109	110	264	265
	LENGTH OF ICE BIN COIL, FT	L					0	517	0	970
	USAGE OF ELECTRICITY, KWH/YR	U					7042	7057	13591	13611
	EFFICIENCY (ANNUAL COP)	E					2.79	2.78	2.75	2.75
MINIMUM	VOLUME OF ICE BIN, FT3	V	1574	787	3198	1599	894	447	1845	922
	AREA OF PANEL, FT2	A	262	259	534	531	145	143	301	299
	LENGTH OF ICE BIN COIL, FT	L	0	743	0	1452	0	475	0	923
	USAGE OF ELECTRICITY, KWH/YR	U	11807	11929	24198	24458	7364	7556	14083	14225
	EFFICIENCY (ANNUAL COP)	E	2.70	2.67	2.66	2.63	2.67	2.60	2.66	2.63

MISSOULA, MONTANA

GEOGRAPHICAL ZONE	= K	LATITUDE (DEG)	= 46.9	GROUND	AO = 44.04 F	AIR TEMP:	OUTDOOR INDOOR
JANUARY WIND (MPH)	= 5.0	LONGITUDE (DEG)	= 114.1	TEMPERATURE	BO = 21.37 F	WINTER	-31 F 70 F
COOLING(TOTAL/SENS.)	= 1.00	ELEVATION (FT)	= 3190.	CONSTANTS:	PO = 0.555 RAD	SUMMER	87 F 78 F

BUILDING DESIGN MONTHLY THERMAL LOADS

MONTH	R-40 INSULATION BIN HEAT LEAK COEFFICIENTS(32F)		UNGLAZED PANEL HEAT	DOMESTIC WATER HEAT	MEDIUM INSULATION				HIGH INSULATION			
					HOUSE 1 1200 FT2		HOUSE 2 2400 FT2		HOUSE 3 1200 FT2		HOUSE 4 2400 FT2	
(M)	TB(M) MBTU/FT2	SD(M) MBTU/FT2	PAN(M) MBTU/FT2	QHW(M) MBTU	QH(M) MBTU	QC(M) MBTU	QH(M) MBTU	QC(M) MBTU	QH(M) MBTU	QC(M) MBTU	QH(M) MBTU	QC(M) MBTU
JAN	0.037	0.046	11.47	1530	14700	0	31450	0	7080	0	16370	0
FEB	0.005	0.007	21.33	1430	11670	0	25360	0	5010	0	12070	0
MAR	0.087	0.022	37.16	1600	10670	0	23750	0	4310	0	10540	0
APR	0.253	0.087	56.91	1530	6780	0	15800	0	2520	0	6650	0
MAY	0.492	0.196	76.29	1540	4430	0	10730	0	1330	870	4280	1290
JUN	0.682	0.297	87.54	1420	2470	1130	6640	1490	490	1780	2270	2610
JUL	0.854	0.398	114.96	1400	1190	2760	3880	4150	0	3600	1080	5360
AUG	0.890	0.441	109.04	1340	1300	2290	4120	3390	0	3000	1320	4450
SEP	0.781	0.411	81.54	1280	2670	950	7000	0	820	1360	3020	2020
OCT	0.625	0.354	50.09	1340	5410	0	13010	0	2160	0	6050	0
NOV	0.388	0.242	22.12	1350	9770	0	21750	0	4370	0	10940	0
DEC	0.183	0.136	12.17	1460	12620	0	27390	0	5880	0	14040	0
ANNUAL THERMAL LOADS (MBTU)				17220	83680	7130	190880	9030	33970	10610	88630	15730
DESIGN HOURLY THERMAL LOADS (BTU/HR)					63374	9472	123238	13279	42079	14233	81086	22840

CALCULATED ACES DESIGNS

ACES SIZE	SYSTEM DESIGN PARAMETERS		HOUSE 1 ICE MAKER	HOUSE 1 BRINE CHILLER	HOUSE 2 ICE MAKER	HOUSE 2 BRINE CHILLER	HOUSE 3 ICE MAKER	HOUSE 3 BRINE CHILLER	HOUSE 4 ICE MAKER	HOUSE 4 BRINE CHILLER
FULL	VOLUME OF ICE BIN, FT3	V					1992	1043	2339	1237
	AREA OF PANEL, FT2	A					146	149	492	507
	LENGTH OF ICE BIN COIL, FT	L					0	592	0	1074
	USAGE OF ELECTRICITY, KWH/YR	U					6207	6228	12631	12604
	EFFICIENCY (ANNUAL COP)	E					2.92	2.91	2.82	2.83
PARTIAL	VOLUME OF ICE BIN, FT3	V					1395	721	1998	1033
	AREA OF PANEL, FT2	A					195	203	545	572
	LENGTH OF ICE BIN COIL, FT	L					0	565	0	1050
	USAGE OF ELECTRICITY, KWH/YR	U					6471	6467	12704	12633
	EFFICIENCY (ANNUAL COP)	E					2.80	2.80	2.80	2.82
MINIMUM	VOLUME OF ICE BIN, FT3	V	1503	751	3054	1527	798	399	1658	829
	AREA OF PANEL, FT2	A	551	579	1128	1185	288	303	607	638
	LENGTH OF ICE BIN COIL, FT	L	0	813	0	1590	0	524	0	1020
	USAGE OF ELECTRICITY, KWH/YR	U	11662	11654	23915	23897	6734	6728	12795	12907
	EFFICIENCY (ANNUAL COP)	E	2.71	2.72	2.66	2.66	2.69	2.69	2.78	2.76

GRAND ISLAND, NEBRASKA

GEOGRAPHICAL ZONE	= I	LATITUDE (DEG)	= 41.0	GROUND	AO = 49.86 F	AIR TEMP:	OUTDOOR INDOOR
JANUARY WIND (MPH)	= 12.0	LONGITUDE (DEG)	= 98.3	TEMPERATURE	BO = 26.99 F	WINTER	-8 F 70 F
COOLING(TOTAL/SENS.)	= 1.07	ELEVATION (FT)	= 1841.	CONSTANTS:	PO = 0.601 RAD	SUMMER	95 F 78 F

BUILDING DESIGN MONTHLY THERMAL LOADS

MONTH	R-40 INSULATION BIN HEAT LEAK COEFFICIENTS(32F)		UNGLAZED PANEL HEAT	DOMESTIC WATER HEAT	MEDIUM INSULATION HOUSE 1 1200 FT2		MEDIUM INSULATION HOUSE 2 2400 FT2		HIGH INSULATION HOUSE 3 1200 FT2		HIGH INSULATION HOUSE 4 2400 FT2	
(M)	TB(M)	SD(M)	PAN(M)	QHW(M)	QH(M)	QC(M)	QH(M)	QC(M)	QH(M)	QC(M)	QH(M)	QC(M)
	MBTU/FT2		MBTU/FT2	MBTU	MBTU	MBTU	MBTU	MBTU	MBTU	MBTU	MBTU	MBTU
JAN	0.156	0.115	17.81	1550	14880	0	31810	0	7720	0	17560	0
FEB	0.094	0.055	26.27	1450	11860	0	25690	0	5680	0	13220	0
MAR	0.194	0.073	49.00	1600	10390	0	23120	0	4600	0	11130	0
APR	0.393	0.148	92.69	1480	5580	0	13210	0	2030	670	5630	0
MAY	0.695	0.285	128.54	1420	2490	1150	6810	1480	520	1860	2270	2710
JUN	0.937	0.411	157.29	1240	520	2590	2200	3670	0	3690	0	4990
JUL	1.166	0.544	168.23	1170	0	4260	0	6240	0	5350	0	7180
AUG	1.225	0.605	175.32	1110	0	4300	0	6300	0	5240	0	7200
SEP	1.097	0.572	134.46	1080	840	2100	2840	3080	0	2580	1240	3660
OCT	0.911	0.506	97.26	1190	2960	690	7710	0	1200	1030	3870	1460
NOV	0.610	0.366	49.46	1260	7490	0	17100	0	3690	0	9240	0
DEC	0.350	0.233	26.77	1430	11820	0	25840	0	5960	0	14080	0
ANNUAL THERMAL LOADS (MBTU)				15980	68830	15090	156330	20770	31400	20420	78240	27200
DESIGN HOURLY THERMAL LOADS (BTU/HR)					48460	17071	94210	26894	30641	18957	58910	30633

CALCULATED ACES DESIGNS

ACES SIZE	SYSTEM DESIGN PARAMETERS		HOUSE 1 ICE MAKER	HOUSE 1 BRINE CHILLER	HOUSE 2 ICE MAKER	HOUSE 2 BRINE CHILLER	HOUSE 3 ICE MAKER	HOUSE 3 BRINE CHILLER	HOUSE 4 ICE MAKER	HOUSE 4 BRINE CHILLER
	VOLUME OF ICE BIN, FT3	V	3505	1781	4807	2460	5259	2741	7080	3596
	AREA OF PANEL, FT2	A	178	191	504	520	0	0	95	110
FULL	LENGTH OF ICE BIN COIL, FT	L	0	716	0	1334	0	502	0	924
	USAGE OF ELECTRICITY, KWH/YR	U	10102	10123	20190	20243	5821	6087	11665	11732
	EFFICIENCY (ANNUAL COP)	E	2.90	2.89	2.80	2.79	3.41	3.26	3.05	3.03
	VOLUME OF ICE BIN, FT3	V	2513	1270	3948	2002	3058	1585	4425	2240
	AREA OF PANEL, FT2	A	236	247	556	570	55	60	185	200
PARTIAL	LENGTH OF ICE BIN COIL, FT	L	0	687	0	1301	0	471	0	874
	USAGE OF ELECTRICITY, KWH/YR	U	10542	10287	20548	20584	7055	7089	12480	12731
	EFFICIENCY (ANNUAL COP)	E	2.78	2.85	2.75	2.75	2.82	2.80	2.85	2.79
	VOLUME OF ICE BIN, FT3	V	1521	760	3088	1544	858	429	1769	884
	AREA OF PANEL, FT2	A	294	305	604	623	161	170	336	354
MINIMUM	LENGTH OF ICE BIN COIL, FT	L	0	644	0	1259	0	401	0	778
	USAGE OF ELECTRICITY, KWH/YR	U	10976	10991	21007	21039	8028	8033	13975	13987
	EFFICIENCY (ANNUAL COP)	E	2.67	2.66	2.69	2.69	2.47	2.47	2.55	2.54

LINCOLN, NEBRASKA

GEOGRAPHICAL ZONE	= I	LATITUDE (DEG)	= 41.1	GROUND	AO = 50.49 F	AIR TEMP:	OUTDOOR INDOOR
JANUARY WIND (MPH)	= 10.0	LONGITUDE (DEG)	= 95.9	TEMPERATURE	BO = 27.69 F	WINTER	-5 F 70 F
COOLING(TOTAL/SENS.)	= 1.14	ELEVATION (FT)	= 1048.	CONSTANTS:	PO = 0.589 RAD	SUMMER	96 F 78 F

BUILDING DESIGN MONTHLY THERMAL LOADS

MONTH	R-40 INSULATION BIN HEAT LEAK COEFFICIENTS(32F)		UNGLAZED PANEL HEAT	DOMESTIC WATER HEAT	MEDIUM INSULATION				HIGH INSULATION			
					HOUSE 1 1200 FT2		HOUSE 2 2400 FT2		HOUSE 3 1200 FT2		HOUSE 4 2400 FT2	
(M)	TB(M) MBTU/FT2	SD(M)	PAN(M) MBTU/FT2	QHW(M) MBTU	QH(M) MBTU	QC(M) MBTU	QH(M) MBTU	QC(M) MBTU	QH(M) MBTU	QC(M) MBTU	QH(M) MBTU	QC(M) MBTU
JAN	0.164	0.119	14.23	1540	14950	0	31930	0	7740	0	17610	0
FEB	0.102	0.059	20.18	1440	12230	0	26440	0	5860	0	13650	0
MAR	0.209	0.079	44.01	1590	10210	0	22790	0	4340	0	10680	0
APR	0.415	0.158	91.68	1470	4840	0	11720	0	1600	730	4710	1050
MAY	0.726	0.299	129.20	1400	1740	1410	5210	1850	0	2290	1420	3210
JUN	0.972	0.428	140.01	1230	0	2780	1580	3990	0	4050	0	5360
JUL	1.205	0.564	143.66	1150	0	3890	0	5430	0	5200	0	6950
AUG	1.262	0.624	139.69	1090	0	3810	0	5230	0	4870	0	6460
SEP	1.127	0.589	112.33	1060	560	1660	2160	2120	0	2280	850	2860
OCT	0.935	0.520	82.40	1170	2320	0	6500	0	810	830	2980	1010
NOV	0.625	0.375	39.91	1250	7150	0	16540	0	3340	0	8690	0
DEC	0.360	0.239	6.27	1430	13400	0	28890	0	7230	0	16680	0
ANNUAL THERMAL LOADS (MBTU)				15820	67400	13550	153760	18620	30920	20250	77270	26900
DESIGN HOURLY THERMAL LOADS (BTU/HR)					46716	16335	90827	25381	29268	17904	56256	29363

CALCULATED ACES DESIGNS

ACES SIZE	SYSTEM DESIGN PARAMETERS		HOUSE 1 ICE MAKER	HOUSE 1 BRINE CHILLER	HOUSE 2 ICE MAKER	HOUSE 2 BRINE CHILLER	HOUSE 3 ICE MAKER	HOUSE 3 BRINE CHILLER	HOUSE 4 ICE MAKER	HOUSE 4 BRINE CHILLER
	VOLUME OF ICE BIN, FT3	V	3327	1688	4299	2179	5295	2838	7159	3614
	AREA OF PANEL, FT2	A	349	379	1111	1200	0	0	143	169
FULL	LENGTH OF ICE BIN COIL, FT	L	0	688	0	1273	0	484	0	888
	USAGE OF ELECTRICITY, KWH/YR	U	9818	9805	19646	19636	5809	5992	11427	11481
	EFFICIENCY (ANNUAL COP)	E	2.89	2.89	2.81	2.81	3.38	3.28	3.08	3.06
	VOLUME OF ICE BIN, FT3	V	2427	1226	3699	1864	3077	1634	4466	2250
	AREA OF PANEL, FT2	A	474	527	* 1241	* 1322	86	95	346	388
PARTIAL	LENGTH OF ICE BIN COIL, FT	L	0	662	0	1249	0	454	0	839
	USAGE OF ELECTRICITY, KWH/YR	U	10167	10155	19870	19858	6844	6858	12288	12512
	EFFICIENCY (ANNUAL COP)	E	2.79	2.79	2.78	2.78	2.87	2.86	2.86	2.81
	VOLUME OF ICE BIN, FT3	V	1527	763	3099	1549	860	430	1773	886
	AREA OF PANEL, FT2	A	* 670	* 723	* 1371	* 1501	386	444	807	952
MINIMUM	LENGTH OF ICE BIN COIL, FT	L	0	624	0	1220	0	385	0	748
	USAGE OF ELECTRICITY, KWH/YR	U	10537	10529	20047	20222	7951	7942	13464	13659
	EFFICIENCY (ANNUAL COP)	E	2.69	2.69	2.75	2.73	2.47	2.47	2.61	2.57

*UNGLAZED PANEL EXCEEDS A PRACTICAL SIZE, AN ALTERNATIVE SUPPLEMENTARY HEAT SOURCE SHOULD BE USED IN THIS DESIGN.

NORTH PLATTE, NEBRASKA

GEOGRAPHICAL ZONE	= I	LATITUDE (DEG)	= 41.1	GROUND	AO = 48.60 F	AIR TEMP:	OUTDOOR	INDOOR
JANUARY WIND (MPH)	= 9.0	LONGITUDE (DEG)	= 100.7	TEMPERATURE	BO = 25.99 F	WINTER	-8 F	70 F
COOLING(TOTAL/SENS.)	= 1.04	ELEVATION (FT)	= 2775.	CONSTANTS:	PO = 0.595 RAD	SUMMER	94 F	78 F

BUILDING DESIGN MONTHLY THERMAL LOADS

MONTH	R-40 INSULATION BIN HEAT LEAK COEFFICIENTS (32F)		UNGLAZED PANEL HEAT	DOMESTIC WATER HEAT	MEDIUM INSULATION HOUSE 1 1200 FT2		MEDIUM INSULATION HOUSE 2 2400 FT2		HIGH INSULATION HOUSE 3 1200 FT2		HIGH INSULATION HOUSE 4 2400 FT2	
(M)	TB(M) MBTU/FT2	SD(M) MBTU/FT2	PAN(M) MBTU/FT2	QHW(M) MBTU	QH(M) MBTU	QC(M) MBTU	QH(M) MBTU	QC(M) MBTU	QH(M) MBTU	QC(M) MBTU	QH(M) MBTU	QC(M) MBTU
JAN	0.127	0.099	21.90	1540	14310	0	30690	0	7190	0	16440	0
FEB	0.070	0.043	27.79	1440	11840	0	25650	0	5640	0	13100	0
MAR	0.166	0.060	47.99	1600	10460	0	23200	0	4610	0	11100	0
APR	0.359	0.133	80.97	1500	6170	0	14380	0	2340	600	6270	0
MAY	0.650	0.265	121.48	1440	3040	1000	7920	0	750	1670	2880	2450
JUN	0.883	0.387	143.72	1280	820	2200	3010	3060	0	3180	0	4310
JUL	1.102	0.514	155.60	1220	0	3800	0	5550	0	4870	0	6530
AUG	1.157	0.571	155.18	1160	0	3850	0	5690	0	4710	0	6470
SEP	1.033	0.539	123.04	1120	1240	1950	3820	2880	0	2430	1690	3510
OCT	0.852	0.475	83.95	1220	3680	0	9150	0	1550	980	4640	1410
NOV	0.563	0.340	45.18	1270	8080	0	18240	0	4010	0	9830	0
DEC	0.312	0.212	27.32	1440	11990	0	26150	0	5970	0	14050	0
ANNUAL THERMAL LOADS (MBTU)				16230	71630	12800	162210	17180	32060	18440	80000	24680
DESIGN HOURLY THERMAL LOADS (BTU/HR)					48812	15304	94914	23709	30716	17623	59061	27999

CALCULATED ACES DESIGNS

ACES SIZE	SYSTEM DESIGN PARAMETERS		HOUSE 1 ICE MAKER	HOUSE 1 BRINE CHILLER	HOUSE 2 ICE MAKER	HOUSE 2 BRINE CHILLER	HOUSE 3 ICE MAKER	HOUSE 3 BRINE CHILLER	HOUSE 4 ICE MAKER	HOUSE 4 BRINE CHILLER
	VOLUME OF ICE BIN, FT3	V	2801	1432	3661	1879	4585	2299	5875	3009
	AREA OF PANEL, FT2	A	198	206	514	526	13	23	122	132
FULL	LENGTH OF ICE BIN COIL, FT	L	0	701	0	1299	0	493	0	907
	USAGE OF ELECTRICITY, KWH/YR	U	10385	10416	20800	20843	6195	6110	11841	11883
	EFFICIENCY (ANNUAL COP)	E	2.84	2.83	2.76	2.75	3.16	3.20	2.99	2.98
	VOLUME OF ICE BIN, FT3	V	2134	1083	3323	1686	2697	1351	3770	1921
	AREA OF PANEL, FT2	A	233	241	533	545	63	69	195	206
PARTIAL	LENGTH OF ICE BIN COIL, FT	L	0	677	0	1281	0	463	0	859
	USAGE OF ELECTRICITY, KWH/YR	U	10739	10755	21020	21056	6834	6939	12400	12741
	EFFICIENCY (ANNUAL COP)	E	2.75	2.74	2.73	2.72	2.86	2.82	2.86	2.78
	VOLUME OF ICE BIN, FT3	V	1468	734	2984	1492	809	404	1665	832
	AREA OF PANEL, FT2	A	268	276	550	565	146	150	301	311
MINIMUM	LENGTH OF ICE BIN COIL, FT	L	0	645	0	1262	0	399	0	774
	USAGE OF ELECTRICITY, KWH/YR	U	10987	11003	21223	21258	7737	7746	13621	13861
	EFFICIENCY (ANNUAL COP)	E	2.68	2.68	2.70	2.70	2.53	2.52	2.60	2.56

ELY, NEVADA

GEOGRAPHICAL ZONE	= L	LATITUDE (DEG)	= 39.3	GROUND	AO = 44.93 F	AIR TEMP:	OUTDOOR	INDOOR
JANUARY WIND (MPH)	= 11.0	LONGITUDE (DEG)	= 114.8	TEMPERATURE	BO = 22.02 F	WINTER	-10 F	70 F
COOLING(TOTAL/SENS.)	= 1.00	ELEVATION (FT)	= 6253.	CONSTANTS:	PO = 0.593 RAD	SUMMER	88 F	78 F

BUILDING DESIGN MONTHLY THERMAL LOADS

MONTH	R-40 INSULATION BIN HEAT LEAK COEFFICIENTS(32F)		UNGLAZED PANEL HEAT	DOMESTIC WATER HEAT	MEDIUM INSULATION				HIGH INSULATION			
					HOUSE 1 1200 FT2		HOUSE 2 2400 FT2		HOUSE 3 1200 FT2		HOUSE 4 2400 FT2	
(M)	TB(M)	SD(M)	PAN(M)	QHW(M)	QH(M)	QC(M)	QH(M)	QC(M)	QH(M)	QC(M)	QH(M)	QC(M)
	MBTU/FT2		MBTU/FT2	MBTU	MBTU	MBTU	MBTU	MBTU	MBTU	MBTU	MBTU	MBTU
JAN	0.065	0.062	31.77	1530	14390	0	30910	0	7140	0	16290	0
FEB	0.021	0.017	38.07	1420	11390	0	24850	0	5260	0	12210	0
MAR	0.099	0.030	57.37	1600	10180	0	22640	0	4530	0	10720	0
APR	0.265	0.093	76.31	1530	7180	0	16280	0	2990	0	7560	0
MAY	0.510	0.204	93.46	1520	5300	0	12440	0	1980	1180	5580	1770
JUN	0.708	0.308	130.78	1400	2470	2260	6550	3370	640	2980	2450	4550
JUL	0.892	0.415	147.94	1370	1140	3100	3700	4790	0	3890	0	5790
AUG	0.938	0.463	146.13	1310	1240	3040	3930	4710	0	3670	1370	5540
SEP	0.834	0.436	115.82	1250	2770	1940	7150	2900	1000	2430	3350	3770
OCT	0.679	0.381	85.61	1320	5460	0	12660	0	2520	890	6690	1340
NOV	0.435	0.267	55.00	1330	8900	0	19780	0	4540	0	10670	0
DEC	0.222	0.158	37.42	1450	12530	0	27240	0	6240	0	14430	0
ANNUAL THERMAL LOADS (MBTU)				17030	82950	10340	188130	15770	36840	15040	91320	22760
DESIGN HOURLY THERMAL LOADS (BTU/HR)					50711	10748	98643	15763	31799	14816	61165	23942

CALCULATED ACES DESIGNS

ACES SIZE	SYSTEM DESIGN PARAMETERS		HOUSE 1 ICE MAKER	HOUSE 1 BRINE CHILLER	HOUSE 2 ICE MAKER	HOUSE 2 BRINE CHILLER	HOUSE 3 ICE MAKER	HOUSE 3 BRINE CHILLER	HOUSE 4 ICE MAKER	HOUSE 4 BRINE CHILLER
	VOLUME OF ICE BIN, FT3	V					3027	1575	4160	2175
	AREA OF PANEL, FT2	A					42	45	129	132
FULL	LENGTH OF ICE BIN COIL, FT	L					0	487	0	900
	USAGE OF ELECTRICITY, KWH/YR	U					6662	6697	12614	13204
	EFFICIENCY (ANNUAL COP)	E					3.03	3.01	3.05	2.91
	VOLUME OF ICE BIN, FT3	V					1915	988	2905	1500
	AREA OF PANEL, FT2	A					65	68	168	173
PARTIAL	LENGTH OF ICE BIN COIL, FT	L					0	460	0	860
	USAGE OF ELECTRICITY, KWH/YR	U					7180	7194	13713	13747
	EFFICIENCY (ANNUAL COP)	E					2.81	2.81	2.80	2.79
	VOLUME OF ICE BIN, FT3	V	1474	737	3003	1501	803	401	1650	825
	AREA OF PANEL, FT2	A	192	198	394	406	103	106	212	220
MINIMUM	LENGTH OF ICE BIN COIL, FT	L	0	667	0	1306	0	411	0	797
	USAGE OF ELECTRICITY, KWH/YR	U	11722	11718	23921	23912	7618	7745	14236	14227
	EFFICIENCY (ANNUAL COP)	E	2.76	2.76	2.71	2.71	2.65	2.61	2.70	2.70

LAS VEGAS, NEVADA

GEOGRAPHICAL ZONE = L	LATITUDE (DEG) = 36.2	GROUND	AO = 67.16 F	AIR TEMP:	OUTDOOR	INDOOR
JANUARY WIND (MPH) = 7.0	LONGITUDE (DEG) = 115.0	TEMPERATURE	BO = 22.97 F	WINTER	25 F	70 F
COOLING(TOTAL/SENS.) = 1.00	ELEVATION (FT) = 1868.	CONSTANTS:	PO = 0.552 RAD	SUMMER	106 F	78 F

BUILDING DESIGN MONTHLY THERMAL LOADS

MONTH	R-40 INSULATION BIN HEAT LEAK COEFFICIENTS(32F)		UNGLAZED PANEL HEAT	DOMESTIC WATER HEAT	MEDIUM INSULATION				HIGH INSULATION			
					HOUSE 1 1200 FT2		HOUSE 2 2400 FT2		HOUSE 3 1200 FT2		HOUSE 4 2400 FT2	
(M)	TB(M)	SD(M)	PAN(M)	QHW(M)	QH(M)	QC(M)	QH(M)	QC(M)	QH(M)	QC(M)	QH(M)	QC(M)
	MBTU/FT2		MBTU/FT2	MBTU	MBTU	MBTU	MBTU	MBTU	MBTU	MBTU	MBTU	MBTU
JAN	0.866	0.462	69.79	1380	4640	0	11050	0	2120	0	5890	0
FEB	0.752	0.381	81.69	1240	3300	0	8170	0	1230	620	3930	940
MAR	0.921	0.438	116.62	1280	2650	1280	7050	1870	820	1700	3100	2620
APR	1.073	0.494	136.38	1090	930	2540	3130	3910	0	3100	1110	4570
MAY	1.357	0.625	171.67	940	0	4500	0	6970	0	4920	0	7200
JUN	1.534	0.720	197.81	770	0	7390	0	11630	0	6950	0	10510
JUL	1.745	0.842	208.56	710	0	9650	0	15520	0	8320	0	12880
AUG	1.782	0.887	194.44	710	0	9230	0	14770	0	7820	0	11950
SEP	1.639	0.842	171.39	780	0	6810	0	10630	0	6070	0	9020
OCT	1.497	0.793	134.89	970	0	3730	0	5820	0	3760	0	5550
NOV	1.215	0.659	85.71	1110	2010	930	5600	1370	900	1080	3280	1650
DEC	1.021	0.559	68.53	1300	3950	0	9570	0	1880	0	5410	0
ANNUAL THERMAL LOADS (MBTU)				12280	17480	46060	44570	72490	6950	44340	22720	66890
DESIGN HOURLY THERMAL LOADS (BTU/HR)					24029	26658	46494	46956	15384	21733	29401	37227

CALCULATED ACES DESIGNS

ACES SIZE	SYSTEM DESIGN PARAMETERS		HOUSE 1		HOUSE 2		HOUSE 3		HOUSE 4	
			ICE MAKER	BRINE CHILLER	ICE MAKER	BRINE CHILLER	ICE MAKER	BRINE CHILLER	ICE MAKER	BRINE CHILLER
	VOLUME OF ICE BIN, FT3	V	2259	1346	5160	3057	1030	595	2319	1370
	AREA OF PANEL, FT2	A	0	0	0	0	0	0	0	0
FULL	LENGTH OF ICE BIN COIL, FT	L	0	373	0	736	0	228	0	447
	USAGE OF ELECTRICITY, KWH/YR	U	10240	9955	16606	16165	9070	9068	14074	14088
	EFFICIENCY (ANNUAL COP)	E	2.17	2.23	2.28	2.34	2.05	2.05	2.12	2.12
	VOLUME OF ICE BIN, FT3	V	1409	813	3156	1816	677	379	1497	853
	AREA OF PANEL, FT2	A	14	14	27	27	0	0	16	17
PARTIAL	LENGTH OF ICE BIN COIL, FT	L	0	351	0	692	0	216	0	422
	USAGE OF ELECTRICITY, KWH/YR	U	10641	10664	18056	18082	9411	9410	14922	14931
	EFFICIENCY (ANNUAL COP)	E	2.09	2.08	2.10	2.10	1.98	1.98	2.00	2.00
	VOLUME OF ICE BIN, FT3	V	558	279	1151	575	325	162	674	337
	AREA OF PANEL, FT2	A	31	34	67	72	18	20	40	43
MINIMUM	LENGTH OF ICE BIN COIL, FT	L	0	307	0	599	0	194	0	375
	USAGE OF ELECTRICITY, KWH/YR	U	11107	11098	18749	18324	9603	9589	15117	15109
	EFFICIENCY (ANNUAL COP)	E	2.00	2.00	2.02	2.07	1.94	1.94	1.97	1.98

WINNEMUCCA, NEVADA

GEOGRAPHICAL ZONE = L	LATITUDE (DEG) = 40.9	GROUND	AO = 49.65 F	AIR TEMP:	OUTDOOR	INDOOR
JANUARY WIND (MPH) = 8.0	LONGITUDE (DEG) = 117.8	TEMPERATURE	BO = 21.90 F	WINTER	-1 F	70 F
COOLING(TOTAL/SENS.) = 1.00	ELEVATION (FT) = 4301.	CONSTANTS:	PO = 0.565 RAD	SUMMER	95 F	78 F

BUILDING DESIGN MONTHLY THERMAL LOADS

MONTH	R-40 INSULATION BIN HEAT LEAK COEFFICIENTS(32F)		UNGLAZED PANEL HEAT	DOMESTIC WATER HEAT	MEDIUM INSULATION				HIGH INSULATION			
					HOUSE 1 1200 FT2		HOUSE 2 2400 FT2		HOUSE 3 1200 FT2		HOUSE 4 2400 FT2	
(M)	TB(M) MBTU/FT2	SD(M) MBTU/FT2	PAN(M) MBTU/FT2	QHW(M) MBTU	QH(M) MBTU	QC(M) MBTU	QH(M) MBTU	QC(M) MBTU	QH(M) MBTU	QC(M) MBTU	QH(M) MBTU	QC(M) MBTU
JAN	0.238	0.148	25.10	1580	12340	0	26870	0	5840	0	13880	0
FEB	0.183	0.097	39.33	1450	8900	0	19950	0	3710	0	9160	0
MAR	0.284	0.121	56.06	1580	8220	0	18780	0	3390	0	8510	0
APR	0.447	0.183	74.81	1440	5600	0	13050	0	2140	660	5860	0
MAY	0.698	0.298	99.09	1370	3440	1190	8620	0	1040	1740	3520	2630
JUN	0.887	0.398	122.85	1200	1440	2630	4300	4000	0	3310	1490	4940
JUL	1.071	0.505	140.83	1150	0	4080	1860	6320	0	4800	0	7060
AUG	1.110	0.550	138.84	1120	0	4080	2240	6430	0	4620	0	6920
SEP	0.995	0.518	107.99	1110	1690	2570	4780	4010	0	3000	2160	4590
OCT	0.842	0.463	76.38	1240	3950	790	9600	0	1680	1180	4920	1740
NOV	0.593	0.346	47.30	1310	7300	0	16640	0	3550	0	8740	0
DEC	0.388	0.241	28.46	1480	10800	0	23860	0	5130	0	12410	0
ANNUAL THERMAL LOADS (MBTU)				16030	63680	15340	150550	20760	26480	19310	70650	27880
DESIGN HOURLY THERMAL LOADS (BTU/HR)					43941	16126	85415	26121	27369	17984	52579	29910

CALCULATED ACES DESIGNS

ACES SIZE	SYSTEM DESIGN PARAMETERS		HOUSE 1 ICE MAKER	HOUSE 1 BRINE CHILLER	HOUSE 2 ICE MAKER	HOUSE 2 BRINE CHILLER	HOUSE 3 ICE MAKER	HOUSE 3 BRINE CHILLER	HOUSE 4 ICE MAKER	HOUSE 4 BRINE CHILLER
FULL	VOLUME OF ICE BIN, FT3	V	3134	1609	3701	1910	4352	2403	6360	3275
	AREA OF PANEL, FT2	A	112	119	348	368	0	0	50	61
	LENGTH OF ICE BIN COIL, FT	L	0	648	0	1187	0	448	0	827
	USAGE OF ELECTRICITY, KWH/YR	U	9653	9704	19688	19724	5400	5648	11024	11068
	EFFICIENCY (ANNUAL COP)	E	2.88	2.87	2.79	2.78	3.35	3.21	3.04	3.03
PARTIAL	VOLUME OF ICE BIN, FT3	V	2211	1127	3167	1613	2520	1373	3896	1995
	AREA OF PANEL, FT2	A	147	154	387	412	36	37	108	115
	LENGTH OF ICE BIN COIL, FT	L	0	621	0	1162	0	419	0	779
	USAGE OF ELECTRICITY, KWH/YR	U	10036	10051	19961	19942	6510	6536	12062	12087
	EFFICIENCY (ANNUAL COP)	E	2.77	2.77	2.75	2.75	2.78	2.77	2.78	2.78
MINIMUM	VOLUME OF ICE BIN, FT3	V	1288	644	2634	1317	687	343	1432	716
	AREA OF PANEL, FT2	A	209	220	431	455	111	118	235	248
	LENGTH OF ICE BIN COIL, FT	L	0	579	0	1133	0	353	0	686
	USAGE OF ELECTRICITY, KWH/YR	U	10411	10401	20093	20267	7320	7314	13189	13177
	EFFICIENCY (ANNUAL COP)	E	2.67	2.68	2.73	2.71	2.47	2.48	2.54	2.55

TRENTON, NEW JERSEY

GEOGRAPHICAL ZONE	= B	LATITUDE (DEG)	= 40.0	GROUND	AO = 52.71 F	AIR TEMP:	OUTDOOR INDOOR
JANUARY WIND (MPH)	= 10.0	LONGITUDE (DEG)	= 74.6	TEMPERATURE	BO = 22.00 F	WINTER	11 F 70 F
COOLING(TOTAL/SENS.)	= 1.13	ELEVATION (FT)	= 133.	CONSTANTS:	PO = 0.649 RAD	SUMMER	88 F 78 F

BUILDING DESIGN MONTHLY THERMAL LOADS

MONTH	R-40 INSULATION BIN HEAT LEAK COEFFICIENTS(32F)		UNGLAZED PANEL HEAT	DOMESTIC WATER HEAT	MEDIUM INSULATION HOUSE 1 1200 FT2		MEDIUM INSULATION HOUSE 2 2400 FT2		HIGH INSULATION HOUSE 3 1200 FT2		HIGH INSULATION HOUSE 4 2400 FT2	
(M)	TB(M) MBTU/FT2	SD(M) MBTU/FT2	PAN(M) MBTU/FT2	QHW(M) MBTU	QH(M) MBTU	QC(M) MBTU	QH(M) MBTU	QC(M) MBTU	QH(M) MBTU	QC(M) MBTU	QH(M) MBTU	QC(M) MBTU
JAN	0.366	0.215	22.53	1580	11160	0	24580	0	5270	0	12850	0
FEB	0.282	0.150	28.07	1440	9420	0	20960	0	4130	0	10280	0
MAR	0.375	0.170	49.53	1550	8180	0	18790	0	3280	0	8500	0
APR	0.523	0.224	76.81	1390	4520	0	11100	0	1480	540	4530	0
MAY	0.773	0.336	105.25	1280	2110	1150	5980	1430	380	1880	1950	2650
JUN	0.966	0.436	118.14	1100	0	2530	2090	3610	0	3610	0	4810
JUL	1.168	0.551	132.72	1040	0	3560	0	5080	0	4880	0	6460
AUG	1.228	0.605	128.60	1010	0	3350	0	4760	0	4580	0	5980
SEP	1.127	0.580	109.27	1030	450	2100	1870	2950	0	2860	0	3800
OCT	0.991	0.535	89.67	1180	1970	620	5690	0	630	960	2590	1290
NOV	0.740	0.419	58.70	1290	4550	0	11300	0	1840	0	5440	0
DEC	0.533	0.315	25.72	1480	9440	0	21200	0	4440	0	11150	0
ANNUAL THERMAL LOADS (MBTU)				15370	51800	13310	123560	17830	21450	19310	57290	24990
DESIGN HOURLY THERMAL LOADS (BTU/HR)					36209	13232	70369	19685	21986	16295	42179	25938

CALCULATED ACES DESIGNS

ACES SIZE	SYSTEM DESIGN PARAMETERS		HOUSE 1 ICE MAKER	HOUSE 1 BRINE CHILLER	HOUSE 2 ICE MAKER	HOUSE 2 BRINE CHILLER	HOUSE 3 ICE MAKER	HOUSE 3 BRINE CHILLER	HOUSE 4 ICE MAKER	HOUSE 4 BRINE CHILLER
	VOLUME OF ICE BIN, FT3	V	3214	1623	4165	2120	3773	2168	7031	3475
	AREA OF PANEL, FT2	A	108	120	357	376	0	0	25	42
FULL	LENGTH OF ICE BIN COIL, FT	L	0	547	0	1014	0	364	0	685
	USAGE OF ELECTRICITY, KWH/YR	U	8143	8156	16474	16516	5299	4982	9169	9363
	EFFICIENCY (ANNUAL COP)	E	2.90	2.89	2.79	2.78	3.10	3.30	3.12	3.06
	VOLUME OF ICE BIN, FT3	V	2196	1106	3293	1665	2204	1242	4184	2071
	AREA OF PANEL, FT2	A	162	173	402	423	40	39	100	115
PARTIAL	LENGTH OF ICE BIN COIL, FT	L	0	523	0	985	0	342	0	645
	USAGE OF ELECTRICITY, KWH/YR	U	8530	8540	16873	16863	6167	5996	10305	10535
	EFFICIENCY (ANNUAL COP)	E	2.76	2.76	2.72	2.72	2.67	2.74	2.78	2.72
	VOLUME OF ICE BIN, FT3	V	1179	589	2421	1210	634	317	1336	668
	AREA OF PANEL, FT2	A	218	227	453	470	115	120	245	256
MINIMUM	LENGTH OF ICE BIN COIL, FT	L	0	483	0	946	0	289	0	561
	USAGE OF ELECTRICITY, KWH/YR	U	8996	8992	17198	17368	6859	6856	11590	11582
	EFFICIENCY (ANNUAL COP)	E	2.62	2.62	2.67	2.64	2.40	2.40	2.47	2.47

ALBUQUERQUE, NEW MEXICO

GEOGRAPHICAL ZONE = L	LATITUDE (DEG) = 35.0	GROUND	AO = 56.84 F	AIR TEMP:	OUTDOOR	INDOOR
JANUARY WIND (MPH) = 8.0	LONGITUDE (DEG) = 106.6	TEMPERATURE	BO = 21.72 F	WINTER	12 F	70 F
COOLING(TOTAL/SENS.) = 1.00	ELEVATION (FT) = 5311.	CONSTANTS:	PO = 0.541 RAD	SUMMER	94 F	78 F

BUILDING DESIGN MONTHLY THERMAL LOADS

MONTH (M)	R-40 INSULATION BIN HEAT LEAK COEFFICIENTS(32F) TB(M) MBTU/FT2	SD(M) MBTU/FT2	UNGLAZED PANEL HEAT PAN(M) MBTU/FT2	DOMESTIC WATER HEAT QHW(M) MBTU	MEDIUM INSULATION HOUSE 1 1200 FT2 QH(M) MBTU	QC(M) MBTU	HOUSE 2 2400 FT2 QH(M) MBTU	QC(M) MBTU	HIGH INSULATION HOUSE 3 1200 FT2 QH(M) MBTU	QC(M) MBTU	HOUSE 4 2400 FT2 QH(M) MBTU	QC(M) MBTU
JAN	0.504	0.280	55.19	1550	7840	0	17930	0	3630	0	8950	0
FEB	0.429	0.218	60.04	1400	6340	0	14550	0	2780	0	7070	0
MAR	0.561	0.258	87.36	1450	5460	0	12750	0	2180	0	6020	0
APR	0.716	0.318	112.35	1260	3100	1110	7920	0	900	1620	3240	2470
MAY	0.976	0.437	134.39	1130	1230	2480	3990	3760	0	3140	1270	4660
JUN	1.152	0.531	159.65	960	0	4130	0	6380	0	4830	0	6920
JUL	1.339	0.641	159.46	910	0	4700	0	7200	0	5260	0	7420
AUG	1.372	0.683	149.17	920	0	4440	0	6760	0	4910	0	6850
SEP	1.244	0.644	142.72	980	0	3470	0	5390	0	3900	0	5630
OCT	1.098	0.591	108.20	1160	1470	1480	4550	2220	450	1800	2120	2730
NOV	0.841	0.470	71.46	1290	4430	0	10580	0	2060	0	5740	0
DEC	0.649	0.370	54.52	1480	7050	0	16250	0	3370	0	8400	0
ANNUAL THERMAL LOADS (MBTU)				14490	36920	21810	88520	31710	15370	25460	42810	36680
DESIGN HOURLY THERMAL LOADS (BTU/HR)					34323	17452	66631	28967	21284	17214	40805	28505

CALCULATED ACES DESIGNS

ACES SIZE	SYSTEM DESIGN PARAMETERS		HOUSE 1 ICE MAKER	HOUSE 1 BRINE CHILLER	HOUSE 2 ICE MAKER	HOUSE 2 BRINE CHILLER	HOUSE 3 ICE MAKER	HOUSE 3 BRINE CHILLER	HOUSE 4 ICE MAKER	HOUSE 4 BRINE CHILLER
	VOLUME OF ICE BIN, FT3	V	5296	3062	9220	4445	2741	1595	5727	3316
	AREA OF PANEL, FT2	A	0	0	26	42	0	0	0	0
FULL	LENGTH OF ICE BIN COIL, FT	L	0	563	0	1056	0	342	0	662
	USAGE OF ELECTRICITY, KWH/YR	U	6670	6721	13101	13411	6200	6011	9373	9132
	EFFICIENCY (ANNUAL COP)	E	3.22	3.19	3.01	2.94	2.61	2.70	2.94	3.02
	VOLUME OF ICE BIN, FT3	V	3083	1749	5512	2673	1611	917	3349	1901
	AREA OF PANEL, FT2	A	29	29	74	85	17	17	35	35
PARTIAL	LENGTH OF ICE BIN COIL, FT	L	0	527	0	995	0	320	0	620
	USAGE OF ELECTRICITY, KWH/YR	U	7771	7644	14624	14679	6918	6750	10881	10909
	EFFICIENCY (ANNUAL COP)	E	2.76	2.81	2.70	2.69	2.34	2.40	2.53	2.52
	VOLUME OF ICE BIN, FT3	V	870	435	1804	902	480	240	972	486
	AREA OF PANEL, FT2	A	70	73	147	153	39	40	80	82
MINIMUM	LENGTH OF ICE BIN COIL, FT	L	0	444	0	869	0	271	0	523
	USAGE OF ELECTRICITY, KWH/YR	U	8844	8838	16065	16056	7360	7357	12015	12015
	EFFICIENCY (ANNUAL COP)	E	2.43	2.43	2.46	2.46	2.20	2.20	2.29	2.29

ROSWELL, NEW MEXICO

GEOGRAPHICAL ZONE	= M	LATITUDE (DEG)	= 33.3	GROUND	AO = 60.73 F	AIR TEMP:	OUTDOOR	INDOOR
JANUARY WIND (MPH)	= 8.0	LONGITUDE (DEG)	= 104.5	TEMPERATURE	BO = 21.71 F	WINTER	13 F	70 F
COOLING(TOTAL/SENS.)	= 1.01	ELEVATION (FT)	= 3649.	CONSTANTS:	PO = 0.512 RAD	SUMMER	98 F	78 F

BUILDING DESIGN MONTHLY THERMAL LOADS

MONTH	R-40 INSULATION BIN HEAT LEAK COEFFICIENTS(32F)		UNGLAZED PANEL HEAT	DOMESTIC WATER HEAT	MEDIUM INSULATION HOUSE 1 1200 FT2		MEDIUM INSULATION HOUSE 2 2400 FT2		HIGH INSULATION HOUSE 3 1200 FT2		HIGH INSULATION HOUSE 4 2400 FT2	
(M)	TB(M) MBTU/FT2	SD(M) MBTU/FT2	PAN(M) MBTU/FT2	QHW(M) MBTU	QH(M) MBTU	QC(M) MBTU	QH(M) MBTU	QC(M) MBTU	QH(M) MBTU	QC(M) MBTU	QH(M) MBTU	QC(M) MBTU
JAN	0.645	0.349	59.98	1480	6860	0	15680	0	3240	0	8170	0
FEB	0.561	0.283	66.24	1330	5350	0	12440	0	2290	0	6100	0
MAR	0.713	0.333	95.81	1380	4400	0	10600	0	1670	1070	4960	1640
APR	0.868	0.393	120.41	1190	2010	1820	5650	2680	510	2400	2170	3590
MAY	1.133	0.516	144.14	1050	0	3490	1880	5410	0	4140	0	6060
JUN	1.302	0.607	158.99	880	0	4970	0	7650	0	5420	0	7800
JUL	1.488	0.717	146.47	840	0	5830	0	8550	0	6050	0	8350
AUG	1.515	0.756	147.68	850	0	5770	0	8440	0	5820	0	8000
SEP	1.377	0.711	132.54	920	0	4100	0	6290	0	4330	0	6170
OCT	1.231	0.659	110.94	1100	830	2060	2990	3120	0	2350	1410	3480
NOV	0.969	0.534	75.57	1230	3480	0	8640	0	1580	690	4730	1050
DEC	0.784	0.437	59.67	1410	5820	0	13560	0	2780	0	7240	0
ANNUAL THERMAL LOADS (MBTU)				13660	28750	28040	71440	42140	12070	32270	34780	46140
DESIGN HOURLY THERMAL LOADS (BTU/HR)					32334	20458	62689	34083	20562	18701	39391	30502

CALCULATED ACES DESIGNS

ACES SIZE	SYSTEM DESIGN PARAMETERS		HOUSE 1 ICE MAKER	HOUSE 1 BRINE CHILLER	HOUSE 2 ICE MAKER	HOUSE 2 BRINE CHILLER	HOUSE 3 ICE MAKER	HOUSE 3 BRINE CHILLER	HOUSE 4 ICE MAKER	HOUSE 4 BRINE CHILLER
	VOLUME OF ICE BIN, FT3	V	4159	2439	8786	5249	1909	1120	4269	2481
	AREA OF PANEL, FT2	A	0	0	0	0	0	0	0	0
FULL	LENGTH OF ICE BIN COIL, FT	L	0	520	0	1020	0	318	0	620
	USAGE OF ELECTRICITY, KWH/YR	U	7323	7113	12020	11479	7233	7038	10715	10432
	EFFICIENCY (ANNUAL COP)	E	2.82	2.90	3.10	3.25	2.35	2.41	2.59	2.66
	VOLUME OF ICE BIN, FT3	V	2466	1412	5187	3021	1173	669	2581	1464
	AREA OF PANEL, FT2	A	23	24	50	48	13	13	26	26
PARTIAL	LENGTH OF ICE BIN COIL, FT	L	0	487	0	956	0	299	0	582
	USAGE OF ELECTRICITY, KWH/YR	U	8495	8329	14327	14038	7686	7700	11959	11996
	EFFICIENCY (ANNUAL COP)	E	2.43	2.48	2.60	2.66	2.21	2.21	2.32	2.31
	VOLUME OF ICE BIN, FT3	V	772	386	1589	794	438	219	894	447
	AREA OF PANEL, FT2	A	55	57	115	119	30	32	63	66
MINIMUM	LENGTH OF ICE BIN COIL, FT	L	0	415	0	811	0	260	0	502
	USAGE OF ELECTRICITY, KWH/YR	U	9100	9104	16049	16061	7814	8013	12802	12410
	EFFICIENCY (ANNUAL COP)	E	2.27	2.27	2.32	2.32	2.17	2.12	2.16	2.23

ALBANY, NEW YORK

GEOGRAPHICAL ZONE	= A	LATITUDE (DEG)	= 42.7	GROUND	AO = 47.92 F	AIR TEMP:	OUTDOOR INDOOR
JANUARY WIND (MPH)	= 10.0	LONGITUDE (DEG)	= 73.8	TEMPERATURE	BO = 24.60 F	WINTER	-6 F 70 F
COOLING(TOTAL/SENS.)	= 1.09	ELEVATION (FT)	= 275.	CONSTANTS:	PO = 0.624 RAD	SUMMER	88 F 78 F

BUILDING DESIGN MONTHLY THERMAL LOADS

MONTH (M)	R-40 INSULATION BIN HEAT LEAK COEFFICIENTS(32F) TB(M) MBTU/FT2	SD(M) MBTU/FT2	UNGLAZED PANEL HEAT PAN(M) MBTU/FT2	DOMESTIC WATER HEAT QHW(M) MBTU	MEDIUM INSULATION HOUSE 1 1200 FT2 QH(M) MBTU	QC(M) MBTU	HOUSE 2 2400 FT2 QH(M) MBTU	QC(M) MBTU	HIGH INSULATION HOUSE 3 1200 FT2 QH(M) MBTU	QC(M) MBTU	HOUSE 4 2400 FT2 QH(M) MBTU	QC(M) MBTU
JAN	0.134	0.102	7.98	1540	14370	0	27000	0	8330	0	17070	0
FEB	0.073	0.045	15.58	1440	11630	0	21910	0	6320	0	13220	0
MAR	0.157	0.058	30.99	1600	10070	0	19220	0	4960	0	10790	0
APR	0.335	0.124	64.98	1500	5250	0	10460	0	2150	0	5190	0
MAY	0.608	0.247	91.56	1460	2510	880	5420	1240	740	1330	2330	1830
JUN	0.831	0.363	106.99	1310	680	2140	1920	3040	0	2890	0	3750
JUL	1.044	0.486	112.30	1250	0	3070	0	4360	0	4000	0	5090
AUG	1.103	0.543	108.79	1190	0	2930	960	4210	0	3750	0	4830
SEP	0.993	0.517	85.63	1140	1030	1460	2760	2010	0	1940	1280	2490
OCT	0.828	0.459	65.83	1230	3030	0	6740	0	1300	440	3610	0
NOV	0.555	0.332	33.52	1280	6670	0	13510	0	3290	0	7750	0
DEC	0.316	0.211	12.55	1440	11880	0	22690	0	6710	0	14140	0
ANNUAL THERMAL LOADS (MBTU)				16380	67120	10480	132590	14860	33800	14350	75380	17990
DESIGN HOURLY THERMAL LOADS (BTU/HR)					45155	13154	78142	20605	30641	15406	54642	23111

CALCULATED ACES DESIGNS

ACES SIZE	SYSTEM DESIGN PARAMETERS		HOUSE 1 ICE MAKER	HOUSE 1 BRINE CHILLER	HOUSE 2 ICE MAKER	HOUSE 2 BRINE CHILLER	HOUSE 3 ICE MAKER	HOUSE 3 BRINE CHILLER	HOUSE 4 ICE MAKER	HOUSE 4 BRINE CHILLER
	VOLUME OF ICE BIN, FT3	V	2104	1075	2701	1388	3442	1758	4318	2217
	AREA OF PANEL, FT2	A	* 503	* 541	* 1148	* 1241	98	110	367	396
FULL	LENGTH OF ICE BIN COIL, FT	L	0	632	0	1055	0	477	0	817
	USAGE OF ELECTRICITY, KWH/YR	U	9783	9777	17273	17257	6198	6213	10984	10966
	EFFICIENCY (ANNUAL COP)	E	2.81	2.82	2.78	2.78	3.05	3.04	2.93	2.93
	VOLUME OF ICE BIN, FT3	V	1788	906	2672	1354	2178	1108	3021	1539
	AREA OF PANEL, FT2	A	* 570	* 609	* 1159	* 1268	203	221	515	543
PARTIAL	LENGTH OF ICE BIN COIL, FT	L	0	619	0	1052	0	451	0	781
	USAGE OF ELECTRICITY, KWH/YR	U	9897	9888	17269	17376	6698	6702	11604	11619
	EFFICIENCY (ANNUAL COP)	E	2.78	2.78	2.78	2.76	2.82	2.82	2.77	2.77
	VOLUME OF ICE BIN, FT3	V	1473	736	2642	1321	915	457	1723	861
	AREA OF PANEL, FT2	A	* 650	* 719	* 1173	* 1296	401	* 444	* 761	* 841
MINIMUM	LENGTH OF ICE BIN COIL, FT	L	0	603	0	1048	0	404	0	726
	USAGE OF ELECTRICITY, KWH/YR	U	10071	10056	17266	17371	7338	7328	12112	12095
	EFFICIENCY (ANNUAL COP)	E	2.73	2.74	2.78	2.76	2.58	2.58	2.65	2.66

*UNGLAZED PANEL EXCEEDS A PRACTICAL SIZE, AN ALTERNATIVE SUPPLEMENTARY HEAT SOURCE SHOULD BE USED IN THIS DESIGN.

BINGHAMTON, NEW YORK

GEOGRAPHICAL ZONE	= A	LATITUDE (DEG)	= 42.2	GROUND	AO = 45.85 F	AIR TEMP:	OUTDOOR / INDOOR
JANUARY WIND (MPH)	= 13.0	LONGITUDE (DEG)	= 76.0	TEMPERATURE	BO = 23.65 F	WINTER	-2 F / 70 F
COOLING(TOTAL/SENS.)	= 1.07	ELEVATION (FT)	= 1590.	CONSTANTS:	PO = 0.653 RAD	SUMMER	85 F / 78 F

BUILDING DESIGN MONTHLY THERMAL LOADS

MONTH	R-40 INSULATION BIN HEAT LEAK COEFFICIENTS(32F)		UNGLAZED PANEL HEAT	DOMESTIC WATER HEAT	MEDIUM INSULATION HOUSE 1 1200 FT2		MEDIUM INSULATION HOUSE 2 2400 FT2		HIGH INSULATION HOUSE 3 1200 FT2		HIGH INSULATION HOUSE 4 2400 FT2	
(M)	TB(M)	SD(M)	PAN(M)	QHW(M)	QH(M)	QC(M)	QH(M)	QC(M)	QH(M)	QC(M)	QH(M)	QC(M)
	MBTU/FT2		MBTU/FT2	MBTU	MBTU	MBTU	MBTU	MBTU	MBTU	MBTU	MBTU	MBTU
JAN	0.082	0.076	5.93	1520	15110	0	28350	0	8930	0	18200	0
FEB	0.021	0.020	12.51	1430	12260	0	23040	0	6790	0	14090	0
MAR	0.089	0.026	24.70	1600	11350	0	21480	0	5810	0	12410	0
APR	0.258	0.089	59.50	1530	6230	0	12240	0	2650	0	6220	0
MAY	0.517	0.204	93.95	1520	3200	0	6680	0	1090	990	3050	1390
JUN	0.735	0.317	114.65	1380	1090	1670	2780	2440	0	2290	910	3080
JUL	0.943	0.435	138.23	1340	0	2560	1340	3670	0	3340	0	4340
AUG	1.007	0.494	121.51	1280	0	2430	1330	3470	0	3130	0	4050
SEP	0.909	0.473	97.09	1210	1300	1180	3260	1630	410	1590	1530	2070
OCT	0.754	0.420	71.30	1280	3470	0	7570	0	1490	380	4050	0
NOV	0.495	0.300	31.08	1300	7700	0	15360	0	3980	0	9110	0
DEC	0.262	0.183	10.26	1430	12950	0	24620	0	7540	0	15690	0
ANNUAL THERMAL LOADS (MBTU)				16820	74660	7840	148050	11210	38690	11720	85260	14930
DESIGN HOURLY THERMAL LOADS (BTU/HR)					43290	11898	74566	18389	28857	14677	51319	21732

CALCULATED ACES DESIGNS

ACES SIZE	SYSTEM DESIGN PARAMETERS		HOUSE 1 ICE MAKER	HOUSE 1 BRINE CHILLER	HOUSE 2 ICE MAKER	HOUSE 2 BRINE CHILLER	HOUSE 3 ICE MAKER	HOUSE 3 BRINE CHILLER	HOUSE 4 ICE MAKER	HOUSE 4 BRINE CHILLER
	VOLUME OF ICE BIN, FT3	V					2469	1274	3122	1618
	AREA OF PANEL, FT2	A					267	284	*719	*755
FULL	LENGTH OF ICE BIN COIL, FT	L					0	435	0	744
	USAGE OF ELECTRICITY, KWH/YR	U					6373	6575	11907	11913
	EFFICIENCY (ANNUAL COP)	E					3.09	3.00	2.88	2.88
	VOLUME OF ICE BIN, FT3	V					1718	879	2474	1265
	AREA OF PANEL, FT2	A					368	390	*879	*940
PARTIAL	LENGTH OF ICE BIN COIL, FT	L					0	416	0	722
	USAGE OF ELECTRICITY, KWH/YR	U					6875	6972	12251	12242
	EFFICIENCY (ANNUAL COP)	E					2.86	2.83	2.80	2.80
	VOLUME OF ICE BIN, FT3	V	1540	770	2765	1382	968	484	1826	913
	AREA OF PANEL, FT2	A	*968	*1067	*1745	*1923	*606	*668	*1149	*1267
MINIMUM	LENGTH OF ICE BIN COIL, FT	L	0	584	0	1012	0	386	0	693
	USAGE OF ELECTRICITY, KWH/YR	U	10490	10480	18843	18827	7260	7254	12498	12486
	EFFICIENCY (ANNUAL COP)	E	2.77	2.78	2.74	2.74	2.71	2.72	2.74	2.75

*UNGLAZED PANEL EXCEEDS A PRACTICAL SIZE, AN ALTERNATIVE SUPPLEMENTARY HEAT SOURCE SHOULD BE USED IN THIS DESIGN.

NIAGARA FALLS, NEW YORK

GEOGRAPHICAL ZONE	= A	LATITUDE (DEG)	= 43.1	GROUND	AO = 47.63 F	AIR TEMP:	OUTDOOR	INDOOR
JANUARY WIND (MPH)	= 15.0	LONGITUDE (DEG)	= 78.9	TEMPERATURE	BO = 23.73 F	WINTER	4 F	70 F
COOLING(TOTAL/SENS.)	= 1.10	ELEVATION (FT)	= 590.	CONSTANTS:	PO = 0.679 RAD	SUMMER	86 F	78 F

BUILDING DESIGN MONTHLY THERMAL LOADS

MONTH	R-40 INSULATION BIN HEAT LEAK COEFFICIENTS(32F)		UNGLAZED PANEL HEAT	DOMESTIC WATER HEAT	MEDIUM INSULATION				HIGH INSULATION			
					HOUSE 1 1200 FT2		HOUSE 2 2400 FT2		HOUSE 3 1200 FT2		HOUSE 4 2400 FT2	
(M)	TB(M)	SD(M)	PAN(M)	QHW(M)	QH(M)	QC(M)	QH(M)	QC(M)	QH(M)	QC(M)	QH(M)	QC(M)
	MBTU/FT2		MBTU/FT2	MBTU	MBTU	MBTU	MBTU	MBTU	MBTU	MBTU	MBTU	MBTU
JAN	0.152	0.112	7.81	1530	14240	0	26900	0	8380	0	17260	0
FEB	0.080	0.051	12.61	1440	12170	0	22980	0	6850	0	14250	0
MAR	0.148	0.057	29.00	1600	10860	0	20720	0	5590	0	12070	0
APR	0.310	0.116	67.90	1510	5790	0	11480	0	2480	0	5910	0
MAY	0.570	0.231	101.36	1470	3020	770	6370	0	1020	1150	2940	1600
JUN	0.789	0.343	133.34	1320	880	2200	2340	3200	0	2890	0	3900
JUL	1.004	0.465	146.41	1270	0	3200	0	4610	0	4080	0	5380
AUG	1.075	0.526	141.66	1200	0	3010	960	4380	0	3790	0	4990
SEP	0.981	0.507	113.54	1150	1170	1330	3060	1820	390	1780	1500	2290
OCT	0.832	0.458	83.90	1240	2910	0	6550	0	1240	460	3540	0
NOV	0.571	0.338	41.51	1280	6720	0	13690	0	3400	0	8060	0
DEC	0.338	0.222	13.67	1430	11860	0	22780	0	6850	0	14480	0
ANNUAL THERMAL LOADS (MBTU)				16440	69620	10510	137830	14010	36200	14150	80010	18160
DESIGN HOURLY THERMAL LOADS (BTU/HR)					39427	13516	67710	21377	26011	15855	46131	24136

CALCULATED ACES DESIGNS

ACES SIZE	SYSTEM DESIGN PARAMETERS		HOUSE 1 ICE MAKER	HOUSE 1 BRINE CHILLER	HOUSE 2 ICE MAKER	HOUSE 2 BRINE CHILLER	HOUSE 3 ICE MAKER	HOUSE 3 BRINE CHILLER	HOUSE 4 ICE MAKER	HOUSE 4 BRINE CHILLER
	VOLUME OF ICE BIN, FT3	V	2050	1052	2653	1394	3256	1685	4388	2261
	AREA OF PANEL, FT2	A	* 560	* 585	* 1241	* 1315	127	136	423	448
FULL	LENGTH OF ICE BIN COIL, FT	L	0	560	0	931	0	411	0	705
	USAGE OF ELECTRICITY, KWH/YR	U	9986	9988	17869	17862	6377	6358	11357	11387
	EFFICIENCY (ANNUAL COP)	E	2.83	2.83	2.76	2.76	3.07	3.08	2.96	2.95
	VOLUME OF ICE BIN, FT3	V	1755	891	2643	1355	2087	1072	3064	1566
	AREA OF PANEL, FT2	A	* 610	* 641	* 1246	* 1349	247	262	577	* 613
PARTIAL	LENGTH OF ICE BIN COIL, FT	L	0	548	0	928	0	389	0	675
	USAGE OF ELECTRICITY, KWH/YR	U	10086	10180	17868	17858	6689	6844	12026	12018
	EFFICIENCY (ANNUAL COP)	E	2.81	2.78	2.76	2.76	2.93	2.86	2.79	2.79
	VOLUME OF ICE BIN, FT3	V	1461	730	2633	1316	918	459	1741	870
	AREA OF PANEL, FT2	A	* 690	* 764	* 1251	* 1383	* 431	* 478	* 824	* 912
MINIMUM	LENGTH OF ICE BIN COIL, FT	L	0	535	0	924	0	351	0	627
	USAGE OF ELECTRICITY, KWH/YR	U	10270	10259	17867	17852	7370	7505	12561	12745
	EFFICIENCY (ANNUAL COP)	E	2.75	2.76	2.76	2.76	2.65	2.61	2.67	2.63

*UNGLAZED PANEL EXCEEDS A PRACTICAL SIZE, AN ALTERNATIVE SUPPLEMENTARY HEAT SOURCE SHOULD BE USED IN THIS DESIGN.

SYRACUSE, NEW YORK

GEOGRAPHICAL ZONE	= A	LATITUDE (DEG)	= 43.1	GROUND	AO = 48.30 F	AIR TEMP:	OUTDOOR INDOOR
JANUARY WIND (MPH)	= 10.0	LONGITUDE (DEG)	= 76.1	TEMPERATURE	BO = 24.25 F	WINTER	-3 F 70 F
COOLING(TOTAL/SENS.)	= 1.08	ELEVATION (FT)	= 410.	CONSTANTS:	PO = 0.656 RAD	SUMMER	87 F 78 F

BUILDING DESIGN MONTHLY THERMAL LOADS

MONTH	R-40 INSULATION BIN HEAT LEAK COEFFICIENTS(32F)		UNGLAZED PANEL HEAT	DOMESTIC WATER HEAT	MEDIUM INSULATION HOUSE 1 1200 FT2		MEDIUM INSULATION HOUSE 2 2400 FT2		HIGH INSULATION HOUSE 3 1200 FT2		HIGH INSULATION HOUSE 4 2400 FT2	
(M)	TB(M) MBTU/FT2	SD(M) MBTU/FT2	PAN(M) MBTU/FT2	QHW(M) MBTU	QH(M) MBTU	QC(M) MBTU	QH(M) MBTU	QC(M) MBTU	QH(M) MBTU	QC(M) MBTU	QH(M) MBTU	QC(M) MBTU
JAN	0.162	0.117	7.63	1550	13960	0	26290	0	8080	0	16600	0
FEB	0.092	0.056	14.88	1450	11460	0	21620	0	6230	0	13050	0
MAR	0.169	0.066	29.10	1610	10270	0	19590	0	5120	0	11100	0
APR	0.338	0.128	64.16	1500	5280	0	10540	0	2160	0	5220	0
MAY	0.606	0.247	97.46	1450	2550	890	5490	1290	810	1320	2440	1810
JUN	0.827	0.362	116.34	1290	700	2240	1950	3230	0	2960	0	3920
JUL	1.044	0.485	124.63	1230	0	3260	0	4680	0	4140	0	5420
AUG	1.111	0.545	121.99	1170	0	3160	0	4550	0	3950	0	5140
SEP	1.009	0.523	104.72	1130	920	1690	2530	2360	0	2110	1170	2780
OCT	0.853	0.470	73.92	1220	2790	0	6320	0	1170	540	3360	680
NOV	0.584	0.346	37.46	1280	6470	0	13180	0	3210	0	7640	0
DEC	0.348	0.227	13.49	1440	11570	0	22180	0	6550	0	13870	0
ANNUAL THERMAL LOADS (MBTU)				16320	65970	11240	129690	16110	33330	15020	74450	19750
DESIGN HOURLY THERMAL LOADS (BTU/HR)					43234	13859	74704	21731	29188	15837	51982	23973

CALCULATED ACES DESIGNS

ACES SIZE	SYSTEM DESIGN PARAMETERS		HOUSE 1 ICE MAKER	HOUSE 1 BRINE CHILLER	HOUSE 2 ICE MAKER	HOUSE 2 BRINE CHILLER	HOUSE 3 ICE MAKER	HOUSE 3 BRINE CHILLER	HOUSE 4 ICE MAKER	HOUSE 4 BRINE CHILLER
	VOLUME OF ICE BIN, FT3	V	2376	1216	3304	1704	3622	1852	4706	2433
	AREA OF PANEL, FT2	A	* 465	* 485	* 957	* 1015	86	100	314	338
FULL	LENGTH OF ICE BIN COIL, FT	L	0	618	0	1040	0	460	0	790
	USAGE OF ELECTRICITY, KWH/YR	U	9631	9653	16984	16981	6148	6163	10906	10871
	EFFICIENCY (ANNUAL COP)	E	2.85	2.84	2.80	2.80	3.08	3.07	2.97	2.98
	VOLUME OF ICE BIN, FT3	V	1906	967	2940	1496	2257	1149	3193	1636
	AREA OF PANEL, FT2	A	* 517	* 553	* 1038	* 1153	187	205	487	511
PARTIAL	LENGTH OF ICE BIN COIL, FT	L	0	600	0	1024	0	434	0	753
	USAGE OF ELECTRICITY, KWH/YR	U	9832	9823	17178	17153	6703	6710	11611	11627
	EFFICIENCY (ANNUAL COP)	E	2.79	2.79	2.77	2.77	2.83	2.82	2.79	2.78
	VOLUME OF ICE BIN, FT3	V	1436	718	2577	1288	891	445	1680	840
	AREA OF PANEL, FT2	A	* 667	* 739	* 1205	* 1333	411	* 456	* 783	* 866
MINIMUM	LENGTH OF ICE BIN COIL, FT	L	0	578	0	1005	0	386	0	693
	USAGE OF ELECTRICITY, KWH/YR	U	10009	10102	17307	17286	7375	7367	12155	12340
	EFFICIENCY (ANNUAL COP)	E	2.74	2.71	2.74	2.75	2.57	2.57	2.66	2.62

*UNGLAZED PANEL EXCEEDS A PRACTICAL SIZE, AN ALTERNATIVE SUPPLEMENTARY HEAT SOURCE SHOULD BE USED IN THIS DESIGN.

NEW BERN, NORTH CAROLINA

GEOGRAPHICAL ZONE = C	LATITUDE (DEG) = 34.9	GROUND	AO = 63.16 F	AIR TEMP:	OUTDOOR	INDOOR
JANUARY WIND (MPH) = 10.0	LONGITUDE (DEG) = 76.9	TEMPERATURE	BO = 16.99 F	WINTER	20 F	70 F
COOLING(TOTAL/SENS.) = 1.25	ELEVATION (FT) = 29.	CONSTANTS:	PO = 0.596 RAD	SUMMER	92 F	78 F

BUILDING DESIGN MONTHLY THERMAL LOADS

MONTH	R-40 INSULATION BIN HEAT LEAK COEFFICIENTS(32F)		UNGLAZED PANEL HEAT	DOMESTIC WATER HEAT	MEDIUM INSULATION				HIGH INSULATION			
					HOUSE 1 1200 FT2		HOUSE 2 2400 FT2		HOUSE 3 1200 FT2		HOUSE 4 2400 FT2	
(M)	TB(M)	SD(M)	PAN(M)	QHW(M)	QH(M)	QC(M)	QH(M)	QC(M)	QH(M)	QC(M)	QH(M)	QC(M)
	MBTU/FT2		MBTU/FT2	MBTU	MBTU	MBTU	MBTU	MBTU	MBTU	MBTU	MBTU	MBTU
JAN	0.839	0.443	73.43	1370	4120	0	10390	0	1670	370	4940	0
FEB	0.728	0.369	78.79	1230	3600	0	9010	0	1400	380	4270	0
MAR	0.864	0.417	102.03	1300	3130	0	8100	0	1100	770	3700	1100
APR	0.966	0.452	136.43	1150	1300	1590	4170	2250	0	2140	1490	3010
MAY	1.180	0.551	152.61	1050	0	3260	1220	4890	0	4330	0	5830
JUN	1.308	0.618	157.17	910	0	4960	0	7050	0	6060	0	8530
JUL	1.476	0.714	172.48	870	0	7150	0	10340	0	7500	0	11010
AUG	1.512	0.751	161.68	870	0	6860	0	9790	0	7110	0	10290
SEP	1.407	0.718	152.01	900	0	4880	0	6710	0	5450	0	7490
OCT	1.313	0.689	120.63	1050	0	2280	1470	3200	0	2890	0	3800
NOV	1.100	0.588	88.67	1140	1890	670	5320	0	750	940	2770	1260
DEC	0.960	0.517	67.89	1300	3790	0	9580	0	1660	430	4910	0
ANNUAL THERMAL LOADS (MBTU)				13140	17830	31650	49260	44230	6580	38370	22080	52320
DESIGN HOURLY THERMAL LOADS (BTU/HR)					26853	22870	51969	38537	17371	21393	33222	37318

CALCULATED ACES DESIGNS

ACES SIZE	SYSTEM DESIGN PARAMETERS		HOUSE 1 ICE MAKER	HOUSE 1 BRINE CHILLER	HOUSE 2 ICE MAKER	HOUSE 2 BRINE CHILLER	HOUSE 3 ICE MAKER	HOUSE 3 BRINE CHILLER	HOUSE 4 ICE MAKER	HOUSE 4 BRINE CHILLER
FULL	VOLUME OF ICE BIN, FT3	V	2597	1549	6060	3580	915	536	2755	1628
	AREA OF PANEL, FT2	A	0	0	0	0	0	0	0	0
	LENGTH OF ICE BIN COIL, FT	L	0	418	0	827	0	251	0	508
	USAGE OF ELECTRICITY, KWH/YR	U	7435	7451	11399	11023	8000	8009	11321	11335
	EFFICIENCY (ANNUAL COP)	E	2.47	2.46	2.74	2.83	2.13	2.13	2.27	2.26
PARTIAL	VOLUME OF ICE BIN, FT3	V	1552	901	3574	2062	598	338	1670	960
	AREA OF PANEL, FT2	A	14	14	32	32	0	0	15	15
	LENGTH OF ICE BIN COIL, FT	L	0	392	0	775	0	237	0	476
	USAGE OF ELECTRICITY, KWH/YR	U	8348	8168	13331	13374	8392	8405	12584	12373
	EFFICIENCY (ANNUAL COP)	E	2.20	2.25	2.34	2.34	2.03	2.02	2.04	2.07
MINIMUM	VOLUME OF ICE BIN, FT3	V	508	254	1088	544	282	141	584	292
	AREA OF PANEL, FT2	A	32	34	69	73	11	12	38	40
	LENGTH OF ICE BIN COIL, FT	L	0	334	0	656	0	212	0	410
	USAGE OF ELECTRICITY, KWH/YR	U	8706	8813	14364	14502	8487	8462	12905	12746
	EFFICIENCY (ANNUAL COP)	E	2.11	2.08	2.18	2.15	2.01	2.01	1.99	2.01

GREENSBORO, NORTH CAROLINA

GEOGRAPHICAL ZONE	= C	LATITUDE (DEG)	= 36.1	GROUND	AO = 57.85 F	AIR TEMP:	OUTDOOR	INDOOR
JANUARY WIND (MPH)	= 8.0	LONGITUDE (DEG)	= 79.9	TEMPERATURE	BO = 19.82 F	WINTER	14 F	70 F
COOLING(TOTAL/SENS.)	= 1.14	ELEVATION (FT)	= 897.	CONSTANTS:	PO = 0.539 RAD	SUMMER	91 F	78 F

BUILDING DESIGN MONTHLY THERMAL LOADS

MONTH	R-40 INSULATION BIN HEAT LEAK COEFFICIENTS(32F)		UNGLAZED PANEL HEAT	DOMESTIC WATER HEAT	MEDIUM INSULATION HOUSE 1 1200 FT2		MEDIUM INSULATION HOUSE 2 2400 FT2		HIGH INSULATION HOUSE 3 1200 FT2		HIGH INSULATION HOUSE 4 2400 FT2	
(M)	TB(M) MBTU/FT2	SD(M) MBTU/FT2	PAN(M) MBTU/FT2	QHW(M) MBTU	QH(M) MBTU	QC(M) MBTU	QH(M) MBTU	QC(M) MBTU	QH(M) MBTU	QC(M) MBTU	QH(M) MBTU	QC(M) MBTU
JAN	0.578	0.314	43.13	1510	7370	0	17090	0	3130	0	8270	0
FEB	0.498	0.253	49.38	1350	5980	0	14050	0	2440	0	6550	0
MAR	0.630	0.295	42.41	1420	4920	0	11950	0	1710	0	5060	0
APR	0.769	0.347	99.66	1240	2320	940	6390	0	580	1490	2340	2140
MAY	1.009	0.458	116.51	1120	760	2160	2920	3030	0	3050	0	4070
JUN	1.166	0.543	121.23	960	0	3610	0	5220	0	4740	0	6330
JUL	1.340	0.644	140.75	920	0	4570	0	6580	0	5830	0	7910
AUG	1.370	0.682	129.25	930	0	4680	0	6150	0	5470	0	7320
SEP	1.249	0.644	110.95	980	0	2990	880	4100	0	3720	0	4850
OCT	1.119	0.599	88.27	1150	1420	1080	4330	1460	460	1450	2030	1990
NOV	0.881	0.486	63.51	1260	3800	0	9460	0	1670	380	4880	0
DEC	0.710	0.396	46.68	1440	6570	0	15410	0	2970	0	7820	0
ANNUAL THERMAL LOADS (MBTU)				14280	33140	20030	82480	26540	12960	26130	36950	34610
DESIGN HOURLY THERMAL LOADS (BTU/HR)					32576	17746	63206	25881	20320	18105	38937	29772

CALCULATED ACES DESIGNS

ACES SIZE	SYSTEM DESIGN PARAMETERS		HOUSE 1 ICE MAKER	HOUSE 1 BRINE CHILLER	HOUSE 2 ICE MAKER	HOUSE 2 BRINE CHILLER	HOUSE 3 ICE MAKER	HOUSE 3 BRINE CHILLER	HOUSE 4 ICE MAKER	HOUSE 4 BRINE CHILLER
	VOLUME OF ICE BIN, FT3	V	4804	2810	7487	3700	2307	1351	5153	2993
	AREA OF PANEL, FT2	A	0	0	50	70	0	0	0	0
FULL	LENGTH OF ICE BIN COIL, FT	L	0	532	0	987	0	322	0	627
	USAGE OF ELECTRICITY, KWH/YR	U	6148	5814	12420	12462	6012	6025	8773	8485
	EFFICIENCY (ANNUAL COP)	E	3.21	3.40	2.91	2.90	2.60	2.60	2.87	2.96
	VOLUME OF ICE BIN, FT3	V	2813	1610	4604	2280	1369	783	3029	1723
	AREA OF PANEL, FT2	A	38	37	111	123	20	20	44	43
PARTIAL	LENGTH OF ICE BIN COIL, FT	L	0	498	0	931	0	301	0	588
	USAGE OF ELECTRICITY, KWH/YR	U	7199	7252	13356	13388	6717	6729	10306	10086
	EFFICIENCY (ANNUAL COP)	E	2.75	2.72	2.70	2.70	2.33	2.32	2.44	2.49
	VOLUME OF ICE BIN, FT3	V	822	411	1722	861	430	215	906	453
	AREA OF PANEL, FT2	A	83	86	176	182	43	45	91	95
MINIMUM	LENGTH OF ICE BIN COIL, FT	L	0	421	0	825	0	257	0	498
	USAGE OF ELECTRICITY, KWH/YR	U	8251	8248	14751	14744	7178	7174	11126	11264
	EFFICIENCY (ANNUAL COP)	E	2.40	2.40	2.45	2.45	2.18	2.18	2.26	2.23

BISMARCK, NORTH DAKOTA

GEOGRAPHICAL ZONE = H	LATITUDE (DEG) = 46.8	GROUND	AO = 42.14 F	AIR TEMP:	OUTDOOR	INDOOR
JANUARY WIND (MPH) = 10.0	LONGITUDE (DEG) = 100.8	TEMPERATURE	BO = 30.56 F	WINTER	-23 F	70 F
COOLING(TOTAL/SENS.) = 1.01	ELEVATION (FT) = 1647.	CONSTANTS:	PO = 0.571 RAD	SUMMER	90 F	78 F

BUILDING DESIGN MONTHLY THERMAL LOADS

MONTH	R-40 INSULATION BIN HEAT LEAK COEFFICIENTS(32F)		UNGLAZED PANEL HEAT	DOMESTIC WATER HEAT	MEDIUM INSULATION				HIGH INSULATION			
					HOUSE 1 1200 FT2		HOUSE 2 2400 FT2		HOUSE 3 1200 FT2		HOUSE 4 2400 FT2	
(M)	TB(M) MBTU/FT2	SD(M) MBTU/FT2	PAN(M) MBTU/FT2	QHW(M) MBTU	QH(M) MBTU	QC(M) MBTU	QH(M) MBTU	QC(M) MBTU	QH(M) MBTU	QC(M) MBTU	QH(M) MBTU	QC(M) MBTU
JAN	-0.206	-0.063	7.17	1490	20320	0	42390	0	11100	0	24120	0
FEB	-0.232	-0.108	9.84	1390	17040	0	35800	0	8720	0	19280	0
MAR	-0.145	-0.102	32.17	1590	13760	0	29800	0	6060	0	14180	0
APR	0.098	-0.007	67.50	1550	8070	0	18400	0	3020	0	7740	0
MAY	0.431	0.144	113.12	1600	4120	0	10160	0	1120	1390	3740	2040
JUN	0.713	0.293	134.75	1510	1600	1750	4840	2440	0	2630	1300	3850
JUL	0.953	0.434	146.25	1510	0	3120	2350	4620	0	4130	0	5790
AUG	1.010	0.498	143.45	1450	0	3000	2300	4540	0	3770	0	5460
SEP	0.868	0.463	104.13	1360	2350	1110	6290	1540	790	1540	2900	2250
OCT	0.639	0.378	76.90	1390	4920	0	11840	0	2060	580	5790	0
NOV	0.309	0.223	25.09	1350	11390	0	24910	0	5700	0	13490	0
DEC	0.006	0.068	9.39	1430	17520	0	36910	0	9510	0	21050	0
ANNUAL THERMAL LOADS (MBTU)				17620	101090	8980	225990	13140	48080	14040	113590	19390
DESIGN HOURLY THERMAL LOADS (BTU/HR)					60894	11507	118557	17275	38564	15035	74299	24383

CALCULATED ACES DESIGNS

ACES SIZE	SYSTEM DESIGN PARAMETERS		HOUSE 1 ICE MAKER	HOUSE 1 BRINE CHILLER	HOUSE 2 ICE MAKER	HOUSE 2 BRINE CHILLER	HOUSE 3 ICE MAKER	HOUSE 3 BRINE CHILLER	HOUSE 4 ICE MAKER	HOUSE 4 BRINE CHILLER
FULL	VOLUME OF ICE BIN, FT3	V					2816	1457	3905	2032
	AREA OF PANEL, FT2	A					382	398	1067	1083
	LENGTH OF ICE BIN COIL, FT	L					0	571	0	1058
	USAGE OF ELECTRICITY, KWH/YR	U					7715	7730	15156	15189
	EFFICIENCY (ANNUAL COP)	E					3.03	3.02	2.91	2.90
PARTIAL	VOLUME OF ICE BIN, FT3	V					1991	1020	3138	1608
	AREA OF PANEL, FT2	A					510	523	1180	* 1203
	LENGTH OF ICE BIN COIL, FT	L					0	547	0	1028
	USAGE OF ELECTRICITY, KWH/YR	U					8124	8138	15538	15570
	EFFICIENCY (ANNUAL COP)	E					2.88	2.87	2.84	2.83
MINIMUM	VOLUME OF ICE BIN, FT3	V	2019	1009	4062	2031	1165	582	2371	1185
	AREA OF PANEL, FT2	A	* 1114	* 1143	* 2248	* 2306	* 631	* 659	* 1290	* 1349
	LENGTH OF ICE BIN COIL, FT	L	0	815	0	1593	0	510	0	989
	USAGE OF ELECTRICITY, KWH/YR	U	13556	13398	27704	27701	8529	8525	15955	15949
	EFFICIENCY (ANNUAL COP)	E	2.76	2.79	2.72	2.72	2.74	2.74	2.77	2.77

*UNGLAZED PANEL EXCEEDS A PRACTICAL SIZE, AN ALTERNATIVE SUPPLEMENTARY HEAT SOURCE SHOULD BE USED IN THIS DESIGN.

GRAND FORKS, NORTH DAKOTA

GEOGRAPHICAL ZONE	= H	LATITUDE (DEG)	= 47.9	GROUND	AO = 39.07 F	AIR TEMP:	OUTDOOR	INDOOR
JANUARY WIND (MPH)	= 10.0	LONGITUDE (DEG)	= 97.4	TEMPERATURE	BO = 32.57 F	WINTER	-26 F	70 F
COOLING(TOTAL/SENS.)	= 1.05	ELEVATION (FT)	= 911.	CONSTANTS:	PO = 0.595 RAD	SUMMER	88 F	78 F

BUILDING DESIGN MONTHLY THERMAL LOADS

MONTH	R-40 INSULATION BIN HEAT LEAK COEFFICIENTS (32F)		UNGLAZED PANEL HEAT	DOMESTIC WATER HEAT	MEDIUM INSULATION				HIGH INSULATION			
					HOUSE 1 1200 FT2		HOUSE 2 2400 FT2		HOUSE 3 1200 FT2		HOUSE 4 2400 FT2	
(M)	TB(M) MBTU/FT2	SD(M) MBTU/FT2	PAN(M) MBTU/FT2	QHW(M) MBTU	QH(M) MBTU	QC(M) MBTU	QH(M) MBTU	QC(M) MBTU	QH(M) MBTU	QC(M) MBTU	QH(M) MBTU	QC(M) MBTU
JAN	-0.352	-0.131	1.48	1510	23660	0	48880	0	13430	0	28620	0
FEB	-0.374	-0.177	6.58	1380	18820	0	39270	0	9780	0	21360	0
MAR	-0.303	-0.181	19.34	1560	16540	0	35220	0	7650	0	17420	0
APR	-0.044	-0.081	55.38	1530	9290	0	20900	0	3410	0	8600	0
MAY	0.303	0.076	96.36	1600	4840	0	11690	0	1340	1170	4220	1690
JUN	0.611	0.237	115.32	1550	2050	1350	5870	1720	0	2270	1580	3250
JUL	0.869	0.388	124.65	1600	740	2760	2970	4020	0	3900	0	5400
AUG	0.939	0.460	126.34	1570	790	2430	2950	3490	0	3340	0	4610
SEP	0.800	0.429	92.18	1500	2420	810	6510	0	720	1220	2810	1760
OCT	0.557	0.340	64.75	1520	5510	0	13210	0	2220	0	6220	0
NOV	0.211	0.179	18.27	1450	12190	0	26490	0	6060	0	14250	0
DEC	-0.119	0.010	4.17	1500	19400	0	40550	0	10690	0	23330	0
ANNUAL THERMAL LOADS (MBTU)				18270	116250	7350	254510	9230	55300	11900	128410	16710
DESIGN HOURLY THERMAL LOADS (BTU/HR)					64159	9966	124983	13750	40368	14805	77816	22834

CALCULATED ACES DESIGNS

ACES SIZE	SYSTEM DESIGN PARAMETERS		HOUSE 1 ICE MAKER	HOUSE 1 BRINE CHILLER	HOUSE 2 ICE MAKER	HOUSE 2 BRINE CHILLER	HOUSE 3 ICE MAKER	HOUSE 3 BRINE CHILLER	HOUSE 4 ICE MAKER	HOUSE 4 BRINE CHILLER
	VOLUME OF ICE BIN, FT3	V					2296	1196	3014	1613
	AREA OF PANEL, FT2	A					* 1531	* 1558	* 5484	* 5276
FULL	LENGTH OF ICE BIN COIL, FT	L					0	581	0	1071
	USAGE OF ELECTRICITY, KWH/YR	U					8486	8506	16608	16914
	EFFICIENCY (ANNUAL COP)	E					2.95	2.94	2.88	2.83
	VOLUME OF ICE BIN, FT3	V					1840	944	2902	1504
	AREA OF PANEL, FT2	A					* 2055	* 2106	* 5711	* 5838
PARTIAL	LENGTH OF ICE BIN COIL, FT	L					0	564	0	1062
	USAGE OF ELECTRICITY, KWH/YR	U					8618	8701	16504	16753
	EFFICIENCY (ANNUAL COP)	E					2.91	2.88	2.90	2.86
	VOLUME OF ICE BIN, FT3	V	2331	1165	4665	2332	1383	691	2790	1395
	AREA OF PANEL, FT2	A	* 5003	* 5274	* 9994	* 10551	* 2963	* 3192	* 5967	* 6404
MINIMUM	LENGTH OF ICE BIN COIL, FT	L	0	868	0	1698	0	542	0	1052
	USAGE OF ELECTRICITY, KWH/YR	U	14943	15066	30186	30433	8741	8872	16604	16756
	EFFICIENCY (ANNUAL COP)	E	2.78	2.76	2.74	2.72	2.86	2.82	2.88	2.86

*UNGLAZED PANEL EXCEEDS A PRACTICAL SIZE, AN ALTERNATIVE SUPPLEMENTARY HEAT SOURCE SHOULD BE USED IN THIS DESIGN.

WILLISTON, NORTH DAKOTA

GEOGRAPHICAL ZONE	= H	LATITUDE (DEG)	= 48.3	GROUND	AO =	43.19 F	AIR TEMP:	OUTDOOR	INDOOR
JANUARY WIND (MPH)	= 7.0	LONGITUDE (DEG)	= 104.5	TEMPERATURE	BO =	29.73 F	WINTER	-21 F	70 F
COOLING(TOTAL/SENS.)	= 1.00	ELEVATION (FT)	= 1860.	CONSTANTS:	PO =	0.588 RAD	SUMMER	88 F	78 F

BUILDING DESIGN MONTHLY THERMAL LOADS

MONTH	R-40 INSULATION BIN HEAT LEAK COEFFICIENTS(32F)		UNGLAZED PANEL HEAT	DOMESTIC WATER HEAT	MEDIUM INSULATION				HIGH INSULATION			
					HOUSE 1 1200 FT2		HOUSE 2 2400 FT2		HOUSE 3 1200 FT2		HOUSE 4 2400 FT2	
(M)	TB(M)	SD(M)	PAN(M)	QHW(M)	QH(M)	QC(M)	QH(M)	QC(M)	QH(M)	QC(M)	QH(M)	QC(M)
	MBTU/FT2		MBTU/FT2	MBTU	MBTU	MBTU	MBTU	MBTU	MBTU	MBTU	MBTU	MBTU
JAN	-0.147	-0.033	5.73	1490	19290	0	40360	0	10300	0	22560	0
FEB	-0.182	-0.082	13.41	1400	15310	0	32420	0	7400	0	16670	0
MAR	-0.098	-0.076	28.83	1590	13360	0	29000	0	5780	0	13580	0
APR	0.134	0.014	61.45	1550	7470	0	17260	0	2660	0	6950	0
MAY	0.458	0.160	97.37	1590	3670	0	9260	0	910	1250	3180	1790
JUN	0.733	0.304	110.46	1490	1340	1550	4190	2130	0	2500	1040	3510
JUL	0.972	0.444	125.61	1470	0	3050	1790	4490	0	4110	0	5830
AUG	1.033	0.509	123.35	1410	0	2970	1680	4340	0	3870	0	5460
SEP	0.898	0.476	88.14	1320	1830	930	5190	1270	530	1370	2210	1910
OCT	0.681	0.397	64.94	1350	4560	0	11150	0	1810	440	5240	0
NOV	0.359	0.246	24.54	1330	10280	0	22730	0	4860	0	11830	0
DEC	0.063	0.095	12.08	1420	15290	0	32570	0	7790	0	17720	0
ANNUAL THERMAL LOADS (MBTU)				17410	92400	8500	207600	12230	42040	13540	100980	18500
DESIGN HOURLY THERMAL LOADS (BTU/HR)					59081	11205	115000	16725	37448	14746	72130	23850

CALCULATED ACES DESIGNS

ACES SIZE	SYSTEM DESIGN PARAMETERS		HOUSE 1 ICE MAKER	HOUSE 1 BRINE CHILLER	HOUSE 2 ICE MAKER	HOUSE 2 BRINE CHILLER	HOUSE 3 ICE MAKER	HOUSE 3 BRINE CHILLER	HOUSE 4 ICE MAKER	HOUSE 4 BRINE CHILLER
FULL	VOLUME OF ICE BIN, FT3	V					2830	1463	3916	2034
	AREA OF PANEL, FT2	A					243	254	746	754
	LENGTH OF ICE BIN COIL, FT	L					0	557	0	1031
	USAGE OF ELECTRICITY, KWH/YR	U					7056	7055	13734	13802
	EFFICIENCY (ANNUAL COP)	E					3.03	3.03	2.92	2.91
PARTIAL	VOLUME OF ICE BIN, FT3	V					1961	1004	3071	1573
	AREA OF PANEL, FT2	A					355	363	887	898
	LENGTH OF ICE BIN COIL, FT	L					0	532	0	999
	USAGE OF ELECTRICITY, KWH/YR	U					7447	7471	14103	14162
	EFFICIENCY (ANNUAL COP)	E					2.87	2.86	2.84	2.83
MINIMUM	VOLUME OF ICE BIN, FT3	V	1924	962	3874	1937	1091	545	2226	1113
	AREA OF PANEL, FT2	A	* 1063	* 1122	* 2132	* 2265	* 604	* 634	* 1223	* 1300
	LENGTH OF ICE BIN COIL, FT	L	0	789	0	1542	0	493	0	957
	USAGE OF ELECTRICITY, KWH/YR	U	12420	12436	25356	25387	7731	7781	14365	14591
	EFFICIENCY (ANNUAL COP)	E	2.79	2.79	2.74	2.74	2.77	2.75	2.79	2.75

*UNGLAZED PANEL EXCEEDS A PRACTICAL SIZE, AN ALTERNATIVE SUPPLEMENTARY HEAT SOURCE SHOULD BE USED IN THIS DESIGN.

AKRON, OHIO

GEOGRAPHICAL ZONE	= G	LATITUDE (DEG)	= 40.9	GROUND	AO = 49.39 F	AIR TEMP:	OUTDOOR INDOOR
JANUARY WIND (MPH)	= 12.0	LONGITUDE (DEG)	= 81.4	TEMPERATURE	BO = 22.73 F	WINTER	1 F 70 F
COOLING(TOTAL/SENS.)	= 1.08	ELEVATION (FT)	= 1208.	CONSTANTS:	PO = 0.635 RAD	SUMMER	87 F 78 F

BUILDING DESIGN MONTHLY THERMAL LOADS

MONTH	R-40 INSULATION BIN HEAT LEAK COEFFICIENTS(32F)		UNGLAZED PANEL HEAT	DOMESTIC WATER HEAT	MEDIUM INSULATION HOUSE 1 1200 FT2		MEDIUM INSULATION HOUSE 2 2400 FT2		HIGH INSULATION HOUSE 3 1200 FT2		HIGH INSULATION HOUSE 4 2400 FT2	
(M)	TB(M)	SD(M)	PAN(M)	QHW(M)	QH(M)	QC(M)	QH(M)	QC(M)	QH(M)	QC(M)	QH(M)	QC(M)
	MBTU/FT2		MBTU/FT2	MBTU	MBTU	MBTU	MBTU	MBTU	MBTU	MBTU	MBTU	MBTU
JAN	0.226	0.146	12.54	1560	12630	0	29080	0	7150	0	15840	0
FEB	0.157	0.087	19.51	1450	10310	0	24490	0	5470	0	12510	0
MAR	0.242	0.103	37.71	1590	9270	0	23000	0	4610	0	10920	0
APR	0.402	0.161	72.22	1470	4910	0	13670	0	2020	510	5540	0
MAY	0.657	0.276	99.23	1400	2440	950	7820	0	780	1350	2760	1780
JUN	0.860	0.381	119.68	1240	680	2550	3250	2910	0	3270	0	4180
JUL	1.062	0.497	127.15	1180	0	3480	1310	4300	0	4410	0	5410
AUG	1.119	0.551	124.33	1130	0	3330	1200	4220	0	4160	0	5300
SEP	1.017	0.526	100.72	1110	800	1820	3010	2000	0	2300	1100	2860
OCT	0.869	0.476	79.54	1220	2850	0	7930	0	1240	670	3710	860
NOV	0.614	0.358	42.01	1290	6500	0	16130	0	3340	0	8250	0
DEC	0.396	0.248	19.59	1460	10890	0	25280	0	6140	0	13830	0
ANNUAL THERMAL LOADS (MBTU)				16100	61280	12130	156170	13430	30750	16670	74460	20390
DESIGN HOURLY THERMAL LOADS (BTU/HR)					40576	14369	83418	16788	27257	16507	50916	24098

CALCULATED ACES DESIGNS

ACES SIZE	SYSTEM DESIGN PARAMETERS		HOUSE 1 ICE MAKER	HOUSE 1 BRINE CHILLER	HOUSE 2 ICE MAKER	HOUSE 2 BRINE CHILLER	HOUSE 3 ICE MAKER	HOUSE 3 BRINE CHILLER	HOUSE 4 ICE MAKER	HOUSE 4 BRINE CHILLER
	VOLUME OF ICE BIN, FT3	V					4055	2062	4916	2542
	AREA OF PANEL, FT2	A					29	42	193	208
FULL	LENGTH OF ICE BIN COIL, FT	L					0	438	0	780
	USAGE OF ELECTRICITY, KWH/YR	U					5918	5824	10985	10953
	EFFICIENCY (ANNUAL COP)	E					3.14	3.20	2.96	2.97
	VOLUME OF ICE BIN, FT3	V					2431	1233	3263	1674
	AREA OF PANEL, FT2	A					95	106	313	330
PARTIAL	LENGTH OF ICE BIN COIL, FT	L					0	412	0	742
	USAGE OF ELECTRICITY, KWH/YR	U					6511	6670	11690	11706
	EFFICIENCY (ANNUAL COP)	E					2.86	2.79	2.78	2.78
	VOLUME OF ICE BIN, FT3	V	1314	657	2836	1418	807	403	1611	805
	AREA OF PANEL, FT2	A	373	413	811	894	229	253	462	508
MINIMUM	LENGTH OF ICE BIN COIL, FT	L	0	541	0	1120	0	359	0	677
	USAGE OF ELECTRICITY, KWH/YR	U	9814	9797	19976	19944	7226	7327	12136	12434
	EFFICIENCY (ANNUAL COP)	E	2.67	2.68	2.72	2.73	2.58	2.54	2.68	2.61

COLUMBUS, OHIO

GEOGRAPHICAL ZONE = G	LATITUDE (DEG) = 40.0	GROUND	AO = 52.58 F	AIR TEMP:	OUTDOOR	INDOOR
JANUARY WIND (MPH) = 10.0	LONGITUDE (DEG) = 82.9	TEMPERATURE	BO = 21.60 F	WINTER	0 F	70 F
COOLING(TOTAL/SENS.) = 1.09	ELEVATION (FT) = 812.	CONSTANTS:	PO = 0.587 RAD	SUMMER	90 F	78 F

BUILDING DESIGN MONTHLY THERMAL LOADS

MONTH (M)	R-40 INSULATION BIN HEAT LEAK COEFFICIENTS(32F) TB(M) MBTU/FT2	SD(M) MBTU/FT2	UNGLAZED PANEL HEAT PAN(M) MBTU/FT2	DOMESTIC WATER HEAT QHW(M) MBTU	MEDIUM INSULATION HOUSE 1 1200 FT2 QH(M) MBTU	QC(M) MBTU	HOUSE 2 2400 FT2 QH(M) MBTU	QC(M) MBTU	HIGH INSULATION HOUSE 3 1200 FT2 QH(M) MBTU	QC(M) MBTU	HOUSE 4 2400 FT2 QH(M) MBTU	QC(M) MBTU
JAN	0.356	0.207	24.23	1580	9440	0	22780	0	4880	0	11510	0
FEB	0.286	0.149	26.32	1440	8590	0	20900	0	4360	0	10290	0
MAR	0.392	0.176	48.42	1540	7370	0	18820	0	3490	0	8630	0
APR	0.546	0.234	76.76	1370	3770	0	10850	0	1470	660	4310	0
MAY	0.796	0.348	97.17	1270	1710	1450	5970	1350	430	1900	1940	2530
JUN	0.981	0.445	113.65	1090	0	3360	1830	4100	0	4190	0	5280
JUL	1.169	0.554	115.64	1040	0	4170	0	5370	0	5070	0	6540
AUG	1.213	0.601	112.50	1020	0	3910	0	4810	0	4510	0	5730
SEP	1.100	0.570	98.90	1050	530	2570	2110	3110	0	2980	0	3870
OCT	0.957	0.520	75.66	1200	2560	880	6990	0	1170	1100	3390	1440
NOV	0.708	0.403	42.68	1310	5900	0	14620	0	3000	0	7470	0
DEC	0.509	0.301	24.48	1490	9130	0	21650	0	4900	0	11410	0
ANNUAL THERMAL LOADS (MBTU)				15400	49000	16340	126520	18740	23700	20410	58950	25390
DESIGN HOURLY THERMAL LOADS (BTU/HR)					40213	16315	81808	20330	27517	16968	51186	25115

CALCULATED ACES DESIGNS

ACES SIZE	SYSTEM DESIGN PARAMETERS		HOUSE 1 ICE MAKER	HOUSE 1 BRINE CHILLER	HOUSE 2 ICE MAKER	HOUSE 2 BRINE CHILLER	HOUSE 3 ICE MAKER	HOUSE 3 BRINE CHILLER	HOUSE 4 ICE MAKER	HOUSE 4 BRINE CHILLER
FULL	VOLUME OF ICE BIN, FT3	V	4024	2032	4509	2292	3988	2288	6998	3515
	AREA OF PANEL, FT2	A	75	85	337	356	0	0	28	46
	LENGTH OF ICE BIN COIL, FT	L	0	617	0	1169	0	447	0	814
	USAGE OF ELECTRICITY, KWH/YR	U	8061	8100	17040	17067	5560	5288	9686	9697
	EFFICIENCY (ANNUAL COP)	E	2.93	2.92	2.76	2.76	3.14	3.30	3.02	3.01
PARTIAL	VOLUME OF ICE BIN, FT3	V	2522	1271	3382	1710	2293	1293	4105	2060
	AREA OF PANEL, FT2	A	128	138	397	415	45	43	109	119
	LENGTH OF ICE BIN COIL, FT	L	0	583	0	1127	0	418	0	764
	USAGE OF ELECTRICITY, KWH/YR	U	8636	8629	17528	17517	6542	6567	10831	10839
	EFFICIENCY (ANNUAL COP)	E	2.74	2.74	2.69	2.69	2.67	2.65	2.70	2.70
MINIMUM	VOLUME OF ICE BIN, FT3	V	1020	510	2255	1127	598	299	1212	606
	AREA OF PANEL, FT2	A	208	216	461	477	122	127	248	257
	LENGTH OF ICE BIN COIL, FT	L	0	520	0	1070	0	349	0	656
	USAGE OF ELECTRICITY, KWH/YR	U	9099	9295	18052	18041	7252	7442	12061	12054
	EFFICIENCY (ANNUAL COP)	E	2.60	2.55	2.61	2.61	2.40	2.34	2.42	2.42

DAYTON, OHIO

GEOGRAPHICAL ZONE	= G	LATITUDE (DEG)	= 39.8	GROUND	AO = 53.70 F	AIR TEMP:	OUTDOOR	INDOOR
JANUARY WIND (MPH)	= 12.0	LONGITUDE (DEG)	= 84.0	TEMPERATURE	BO = 23.50 F	WINTER	-1 F	70 F
COOLING(TOTAL/SENS.)	= 1.13	ELEVATION (FT)	= 824.	CONSTANTS:	PO = 0.605 RAD	SUMMER	90 F	78 F

BUILDING DESIGN MONTHLY THERMAL LOADS

MONTH	R-40 INSULATION BIN HEAT LEAK COEFFICIENTS(32F)		UNGLAZED PANEL HEAT	DOMESTIC WATER HEAT	MEDIUM INSULATION HOUSE 1 1200 FT2		MEDIUM INSULATION HOUSE 2 2400 FT2		HIGH INSULATION HOUSE 3 1200 FT2		HIGH INSULATION HOUSE 4 2400 FT2	
(M)	TB(M)	SD(M)	PAN(M)	QHW(M)	QH(M)	QC(M)	QH(M)	QC(M)	QH(M)	QC(M)	QH(M)	QC(M)
	MBTU/FT2		MBTU/FT2	MBTU	MBTU	MBTU	MBTU	MBTU	MBTU	MBTU	MBTU	MBTU
JAN	0.366	0.215	17.17	1580	11450	0	26510	0	6450	0	14460	0
FEB	0.288	0.151	29.15	1450	8730	0	21170	0	4530	0	10630	0
MAR	0.396	0.178	55.70	1540	7130	0	18360	0	3380	0	8380	0
APR	0.562	0.239	92.96	1370	3230	0	9650	0	1230	870	3700	1100
MAY	0.832	0.361	116.43	1250	1360	1700	5010	1710	0	2260	1580	2910
JUN	1.035	0.468	129.51	1060	0	3260	1510	3900	0	4070	0	5060
JUL	1.243	0.588	138.08	1000	0	4850	0	5840	0	5500	0	7180
AUG	1.295	0.641	128.28	980	0	4760	0	5770	0	5280	0	6860
SEP	1.177	0.609	126.39	1000	0	3180	1270	3880	0	3600	0	4630
OCT	1.024	0.556	91.76	1170	1780	890	5310	0	730	1130	2480	1440
NOV	0.754	0.430	54.67	1290	5090	0	12900	0	2590	0	6590	0
DEC	0.535	0.318	25.84	1480	9530	0	22330	0	5310	0	12200	0
ANNUAL THERMAL LOADS (MBTU)				15170	48300	18640	124020	21100	24220	22710	60020	29180
DESIGN HOURLY THERMAL LOADS (BTU/HR)					40649	17904	82499	23056	27949	17863	51954	27434

CALCULATED ACES DESIGNS

ACES SIZE	SYSTEM DESIGN PARAMETERS		HOUSE 1 ICE MAKER	HOUSE 1 BRINE CHILLER	HOUSE 2 ICE MAKER	HOUSE 2 BRINE CHILLER	HOUSE 3 ICE MAKER	HOUSE 3 BRINE CHILLER	HOUSE 4 ICE MAKER	HOUSE 4 BRINE CHILLER
	VOLUME OF ICE BIN, FT3	V	5186	2545	5481	2778	4125	2367	8440	4130
	AREA OF PANEL, FT2	A	45	63	333	360	0	0	0	26
FULL	LENGTH OF ICE BIN COIL, FT	L	0	640	0	1206	0	455	0	841
	USAGE OF ELECTRICITY, KWH/YR	U	8008	8046	16744	16772	6069	5889	9639	9658
	EFFICIENCY (ANNUAL COP)	E	3.00	2.99	2.80	2.80	3.00	3.09	3.17	3.17
	VOLUME OF ICE BIN, FT3	V	3196	1574	4041	2039	2435	1369	4963	2436
	AREA OF PANEL, FT2	A	113	132	419	442	46	45	92	114
PARTIAL	LENGTH OF ICE BIN COIL, FT	L	0	604	0	1161	0	427	0	790
	USAGE OF ELECTRICITY, KWH/YR	U	8623	8794	17214	17238	6861	6889	10962	10981
	EFFICIENCY (ANNUAL COP)	E	2.79	2.74	2.73	2.72	2.65	2.64	2.79	2.78
	VOLUME OF ICE BIN, FT3	V	1207	603	2601	1300	744	372	1486	743
	AREA OF PANEL, FT2	A	246	268	534	582	150	165	305	332
MINIMUM	LENGTH OF ICE BIN COIL, FT	L	0	536	0	1097	0	363	0	682
	USAGE OF ELECTRICITY, KWH/YR	U	9609	9594	17833	17803	7634	7769	12375	12547
	EFFICIENCY (ANNUAL COP)	E	2.50	2.51	2.63	2.64	2.38	2.34	2.47	2.44

TOLEDO, OHIO

GEOGRAPHICAL ZONE	= G	LATITUDE (DEG)	= 41.6	GROUND	AO = 48.90 F	AIR TEMP:	OUTDOOR INDOOR
JANUARY WIND (MPH)	= 13.0	LONGITUDE (DEG)	= 83.8	TEMPERATURE	BO = 24.61 F	WINTER	-3 F 70 F
COOLING(TOTAL/SENS.)	= 1.09	ELEVATION (FT)	= 669.	CONSTANTS:	PO = 0.623 RAD	SUMMER	90 F 78 F

BUILDING DESIGN MONTHLY THERMAL LOADS

MONTH (M)	R-40 INSULATION BIN HEAT LEAK COEFFICIENTS(32F) TB(M) MBTU/FT2	SD(M) MBTU/FT2	UNGLAZED PANEL HEAT PAN(M) MBTU/FT2	DOMESTIC WATER HEAT QHW(M) MBTU	MEDIUM INSULATION HOUSE 1 1200 FT2 QH(M) MBTU	QC(M) MBTU	HOUSE 2 2400 FT2 QH(M) MBTU	QC(M) MBTU	HIGH INSULATION HOUSE 3 1200 FT2 QH(M) MBTU	QC(M) MBTU	HOUSE 4 2400 FT2 QH(M) MBTU	QC(M) MBTU
JAN	0.171	0.120	9.45	1540	14070	0	31890	0	8230	0	17860	0
FEB	0.106	0.062	15.43	1440	11320	0	26530	0	6160	0	13820	0
MAR	0.193	0.076	37.83	1600	9570	0	23730	0	4700	0	11210	0
APR	0.370	0.142	76.04	1490	5110	0	14140	0	2190	490	5800	0
MAY	0.645	0.266	109.98	1430	2260	1200	7360	0	700	1700	2540	2190
JUN	0.867	0.381	127.34	1270	690	2640	3180	2950	0	3360	0	4300
JUL	1.080	0.504	129.90	1210	0	3840	1270	4800	0	4710	0	5930
AUG	1.140	0.562	133.57	1150	0	3650	1280	4660	0	4400	0	5760
SEP	1.028	0.534	103.71	1120	880	2060	3100	2380	0	2530	1210	3230
OCT	0.864	0.477	89.18	1210	2860	620	7890	0	1290	820	3770	1060
NOV	0.590	0.350	41.83	1280	6640	0	16480	0	3410	0	8410	0
DEC	0.352	0.229	14.22	1440	12040	0	27500	0	6980	0	15400	0
ANNUAL THERMAL LOADS (MBTU)				16180	65440	14010	164350	14790	33660	18010	80020	22470
DESIGN HOURLY THERMAL LOADS (BTU/HR)					43187	16409	88681	20498	29178	17967	54530	26984

CALCULATED ACES DESIGNS

ACES SIZE	SYSTEM DESIGN PARAMETERS		HOUSE 1 ICE MAKER	HOUSE 1 BRINE CHILLER	HOUSE 2 ICE MAKER	HOUSE 2 BRINE CHILLER	HOUSE 3 ICE MAKER	HOUSE 3 BRINE CHILLER	HOUSE 4 ICE MAKER	HOUSE 4 BRINE CHILLER
	VOLUME OF ICE BIN, FT3	V					4533	2275	5419	2778
	AREA OF PANEL, FT2	A					32	51	269	300
FULL	LENGTH OF ICE BIN COIL, FT	L					0	471	0	837
	USAGE OF ELECTRICITY, KWH/YR	U					6275	6286	11598	11620
	EFFICIENCY (ANNUAL COP)	E					3.17	3.16	3.00	2.99
	VOLUME OF ICE BIN, FT3	V					2719	1364	3608	1838
	AREA OF PANEL, FT2	A					132	153	459	487
PARTIAL	LENGTH OF ICE BIN COIL, FT	L					0	443	0	797
	USAGE OF ELECTRICITY, KWH/YR	U					6909	7073	12418	12434
	EFFICIENCY (ANNUAL COP)	E					2.88	2.81	2.80	2.80
	VOLUME OF ICE BIN, FT3	V	1446	723	3096	1548	905	452	1796	898
	AREA OF PANEL, FT2	A	* 559	* 612	* 1204	* 1315	348	382	698	763
MINIMUM	LENGTH OF ICE BIN COIL, FT	L	0	578	0	1195	0	387	0	729
	USAGE OF ELECTRICITY, KWH/YR	U	10378	10366	20879	20876	7805	7797	13268	13253
	EFFICIENCY (ANNUAL COP)	E	2.70	2.70	2.74	2.74	2.55	2.55	2.62	2.62

*UNGLAZED PANEL EXCEEDS A PRACTICAL SIZE, AN ALTERNATIVE SUPPLEMENTARY HEAT SOURCE SHOULD BE USED IN THIS DESIGN.

IHC002I STOP 0

ALTUS, OKLAHOMA

GEOGRAPHICAL ZONE	= J	LATITUDE (DEG)	= 34.6	GROUND	AO = 61.51 F	AIR TEMP:	OUTDOOR INDOOR
JANUARY WIND (MPH)	= 11.0	LONGITUDE (DEG)	= 99.3	TEMPERATURE	BO = 23.64 F	WINTER	11 F 70 F
COOLING(TOTAL/SENS.)	= 1.09	ELEVATION (FT)	= 1378.	CONSTANTS:	PO = 0.567 RAD	SUMMER	101 F 78 F

BUILDING DESIGN MONTHLY THERMAL LOADS

MONTH	R-40 INSULATION BIN HEAT LEAK COEFFICIENTS(32F)		UNGLAZED PANEL HEAT	DOMESTIC WATER HEAT	MEDIUM INSULATION HOUSE 1 1200 FT2		MEDIUM INSULATION HOUSE 2 2400 FT2		HIGH INSULATION HOUSE 3 1200 FT2		HIGH INSULATION HOUSE 4 2400 FT2	
(M)	TB(M)	SD(M)	PAN(M)	QHW(M)	QH(M)	QC(M)	QH(M)	QC(M)	QH(M)	QC(M)	QH(M)	QC(M)
	MBTU/FT2		MBTU/FT2	MBTU	MBTU	MBTU	MBTU	MBTU	MBTU	MBTU	MBTU	MBTU
JAN	0.646	0.354	52.60	1500	7610	0	17390	0	3670	0	9160	0
FEB	0.549	0.280	60.73	1350	5890	0	13700	0	2570	0	6750	0
MAR	0.695	0.325	93.53	1400	4790	0	11530	0	1920	810	5450	1200
APR	0.858	0.386	131.35	1200	1810	1390	5210	1910	440	2020	1940	2890
MAY	1.141	0.515	163.75	1050	0	3130	1370	4540	0	4090	0	5450
JUN	1.333	0.617	181.49	860	0	5280	0	7650	0	6070	0	8510
JUL	1.544	0.740	195.56	800	0	7660	0	11260	0	7520	0	10970
AUG	1.587	0.789	185.66	800	0	7480	0	11050	0	7110	0	10250
SEP	1.451	0.748	157.65	870	0	4820	0	6940	0	4950	0	6830
OCT	1.299	0.695	126.58	1060	500	2140	2030	3170	0	2460	1000	3490
NOV	1.017	0.562	84.93	1210	3090	0	7880	0	1450	650	4400	930
DEC	0.809	0.455	61.39	1410	5880	0	13810	0	2850	0	7490	0
ANNUAL THERMAL LOADS (MBTU)				13510	29570	31900	72920	46520	12900	35680	36190	50520
DESIGN HOURLY THERMAL LOADS (BTU/HR)					33229	23799	64408	39982	21347	21086	40901	35242

CALCULATED ACES DESIGNS

ACES SIZE	SYSTEM DESIGN PARAMETERS		HOUSE 1 ICE MAKER	HOUSE 1 BRINE CHILLER	HOUSE 2 ICE MAKER	HOUSE 2 BRINE CHILLER	HOUSE 3 ICE MAKER	HOUSE 3 BRINE CHILLER	HOUSE 4 ICE MAKER	HOUSE 4 BRINE CHILLER
	VOLUME OF ICE BIN, FT3	V	4330	2541	9508	5567	2076	1220	4642	2703
	AREA OF PANEL, FT2	A	0	0	0	0	0	0	0	0
FULL	LENGTH OF ICE BIN COIL, FT	L	0	535	0	1052	0	332	0	648
	USAGE OF ELECTRICITY, KWH/YR	U	8027	8057	13037	12657	7872	7884	11631	11673
	EFFICIENCY (ANNUAL COP)	E	2.74	2.73	2.99	3.08	2.31	2.31	2.52	2.52
	VOLUME OF ICE BIN, FT3	V	2587	1481	5628	3220	1277	729	2814	1598
	AREA OF PANEL, FT2	A	26	26	53	53	14	14	28	28
PARTIAL	LENGTH OF ICE BIN COIL, FT	L	0	502	0	987	0	312	0	608
	USAGE OF ELECTRICITY, KWH/YR	U	9249	9273	15477	15087	8425	8435	13022	13037
	EFFICIENCY (ANNUAL COP)	E	2.38	2.37	2.52	2.58	2.16	2.16	2.25	2.25
	VOLUME OF ICE BIN, FT3	V	844	422	1749	874	478	239	987	493
	AREA OF PANEL, FT2	A	62	65	131	136	34	36	73	76
MINIMUM	LENGTH OF ICE BIN COIL, FT	L	0	430	0	840	0	271	0	526
	USAGE OF ELECTRICITY, KWH/YR	U	9980	9985	17136	17149	8819	8822	13854	13861
	EFFICIENCY (ANNUAL COP)	E	2.20	2.20	2.27	2.27	2.06	2.06	2.12	2.12

OKLAHOMA CITY, OKLAHOMA

GEOGRAPHICAL ZONE = J	LATITUDE (DEG) = 35.4	GROUND	AO = 59.94 F	AIR TEMP:	OUTDOOR	INDOOR
JANUARY WIND (MPH) = 15.0	LONGITUDE (DEG) = 97.4	TEMPERATURE	BO = 23.07 F	WINTER	9 F	70 F
COOLING(TOTAL/SENS.) = 1.14	ELEVATION (FT) = 1291.	CONSTANTS:	PO = 0.586 RAD	SUMMER	97 F	78 F

BUILDING DESIGN MONTHLY THERMAL LOADS

MONTH	R-40 INSULATION BIN HEAT LEAK COEFFICIENTS(32F)		UNGLAZED PANEL HEAT	DOMESTIC WATER HEAT	MEDIUM INSULATION				HIGH INSULATION			
					HOUSE 1 1200 FT2		HOUSE 2 2400 FT2		HOUSE 3 1200 FT2		HOUSE 4 2400 FT2	
(M)	TB(M)	SD(M)	PAN(M)	QHW(M)	QH(M)	QC(M)	QH(M)	QC(M)	QH(M)	QC(M)	QH(M)	QC(M)
	MBTU/FT2		MBTU/FT2	MBTU	MBTU	MBTU	MBTU	MBTU	MBTU	MBTU	MBTU	MBTU
JAN	0.602	0.332	51.04	1510	8470	0	19190	0	4150	0	10260	0
FEB	0.506	0.260	58.59	1370	6600	0	15230	0	2940	0	7590	0
MAR	0.641	0.299	91.80	1420	5370	0	12850	0	2200	510	6060	0
APR	0.798	0.358	138.36	1230	2070	1050	5830	1360	550	1650	2200	2330
MAY	1.073	0.483	167.64	1080	0	2480	1710	3540	0	3590	0	4640
JUN	1.263	0.583	188.23	900	0	4610	0	6590	0	5670	0	7860
JUL	1.471	0.703	195.44	840	0	6890	0	9980	0	7180	0	10350
AUG	1.518	0.753	198.17	840	0	6950	0	10140	0	6960	0	10000
SEP	1.390	0.716	173.80	900	0	4310	0	6150	0	4650	0	6350
OCT	1.244	0.666	142.24	1090	630	1860	2350	2740	0	2250	1130	3150
NOV	0.971	0.537	91.24	1230	3310	0	8380	0	1560	530	4630	0
DEC	0.765	0.432	60.89	1430	6480	0	15150	0	3160	0	8190	0
ANNUAL THERMAL LOADS (MBTU)				13840	32930	28150	80690	40500	14560	32990	40060	44680
DESIGN HOURLY THERMAL LOADS (BTU/HR)					34719	22864	67319	38042	22268	21051	42682	35459

CALCULATED ACES DESIGNS

ACES SIZE	SYSTEM DESIGN PARAMETERS		HOUSE 1 ICE MAKER	HOUSE 1 BRINE CHILLER	HOUSE 2 ICE MAKER	HOUSE 2 BRINE CHILLER	HOUSE 3 ICE MAKER	HOUSE 3 BRINE CHILLER	HOUSE 4 ICE MAKER	HOUSE 4 BRINE CHILLER
	VOLUME OF ICE BIN, FT3	V	4920	2880	10659	6220	2407	1406	5644	3293
	AREA OF PANEL, FT2	A	0	0	0	0	0	0	0	0
FULL	LENGTH OF ICE BIN COIL, FT	L	0	564	0	1108	0	350	0	688
	USAGE OF ELECTRICITY, KWH/YR	U	7535	7295	12431	11752	7366	7380	10857	10893
	EFFICIENCY (ANNUAL COP)	E	2.91	3.01	3.18	3.37	2.44	2.44	2.66	2.65
	VOLUME OF ICE BIN, FT3	V	2922	1671	6288	3589	1466	834	3367	1919
	AREA OF PANEL, FT2	A	28	28	58	58	15	15	34	34
PARTIAL	LENGTH OF ICE BIN COIL, FT	L	0	529	0	1040	0	329	0	646
	USAGE OF ELECTRICITY, KWH/YR	U	8956	8711	14992	14656	8222	8012	12382	12416
	EFFICIENCY (ANNUAL COP)	E	2.45	2.52	2.64	2.70	2.19	2.24	2.33	2.33
	VOLUME OF ICE BIN, FT3	V	924	462	1917	958	524	262	1090	545
	AREA OF PANEL, FT2	A	71	73	149	155	39	41	82	86
MINIMUM	LENGTH OF ICE BIN COIL, FT	L	0	452	0	884	0	285	0	552
	USAGE OF ELECTRICITY, KWH/YR	U	9656	9834	16919	16933	8537	8533	13394	13554
	EFFICIENCY (ANNUAL COP)	E	2.27	2.23	2.34	2.34	2.11	2.11	2.16	2.13

TULSA, OKLAHOMA

GEOGRAPHICAL ZONE	= J	LATITUDE (DEG)	= 36.2	GROUND	AO = 60.10 F	AIR TEMP:	OUTDOOR INDOOR
JANUARY WIND (MPH)	= 11.0	LONGITUDE (DEG)	= 95.9	TEMPERATURE	BO = 23.17 F	WINTER	8 F 70 F
COOLING(TOTAL/SENS.)	= 1.16	ELEVATION (FT)	= 650.	CONSTANTS:	PO = 0.593 RAD	SUMMER	99 F 78 F

BUILDING DESIGN MONTHLY THERMAL LOADS

MONTH (M)	R-40 INSULATION BIN HEAT LEAK COEFFICIENTS(32F) TB(M) MBTU/FT2	SD(M) MBTU/FT2	UNGLAZED PANEL HEAT PAN(M) MBTU/FT2	DOMESTIC WATER HEAT QHW(M) MBTU	MEDIUM INSULATION HOUSE 1 1200 FT2 QH(M) MBTU	QC(M) MBTU	HOUSE 2 2400 FT2 QH(M) MBTU	QC(M) MBTU	HIGH INSULATION HOUSE 3 1200 FT2 QH(M) MBTU	QC(M) MBTU	HOUSE 4 2400 FT2 QH(M) MBTU	QC(M) MBTU
JAN	0.608	0.335	39.65	1510	8710	0	19680	0	4200	0	10430	0
FEB	0.510	0.262	53.14	1370	6370	0	14770	0	2720	0	7170	0
MAR	0.643	0.301	87.01	1420	5020	0	12140	0	1960	570	5560	0
APR	0.800	0.359	116.38	1230	2120	940	5910	0	560	1540	2210	2120
MAY	1.075	0.484	144.96	1080	0	2540	1990	3630	0	3690	0	4820
JUN	1.267	0.585	156.86	900	0	4750	0	6790	0	5760	0	8030
JUL	1.477	0.706	168.09	830	0	7140	0	10430	0	7360	0	10730
AUG	1.526	0.757	167.73	830	0	7040	0	10260	0	7020	0	10160
SEP	1.399	0.720	143.43	890	0	4430	0	6310	0	4730	0	6440
OCT	1.254	0.671	122.24	1080	690	1920	2470	2700	0	2310	1210	3140
NOV	0.980	0.542	80.81	1220	3220	0	8200	0	1470	540	4450	0
DEC	0.773	0.436	54.97	1420	6140	0	14500	0	2870	0	7610	0
ANNUAL THERMAL LOADS (MBTU)				13780	32270	28760	79660	40120	13780	33520	38640	45440
DESIGN HOURLY THERMAL LOADS (BTU/HR)					35164	23564	68174	39488	22667	21589	43449	36727

CALCULATED ACES DESIGNS

ACES SIZE	SYSTEM DESIGN PARAMETERS		HOUSE 1 ICE MAKER	HOUSE 1 BRINE CHILLER	HOUSE 2 ICE MAKER	HOUSE 2 BRINE CHILLER	HOUSE 3 ICE MAKER	HOUSE 3 BRINE CHILLER	HOUSE 4 ICE MAKER	HOUSE 4 BRINE CHILLER
	VOLUME OF ICE BIN, FT3	V	4836	2833	10722	6267	2289	1336	5447	3175
	AREA OF PANEL, FT2	A	0	0	0	0	0	0	0	0
FULL	LENGTH OF ICE BIN COIL, FT	L	0	570	0	1122	0	354	0	696
	USAGE OF ELECTRICITY, KWH/YR	U	7784	7538	12304	11625	7580	7371	11210	10809
	EFFICIENCY (ANNUAL COP)	E	2.82	2.91	3.18	3.37	2.36	2.43	2.56	2.65
	VOLUME OF ICE BIN, FT3	V	2891	1653	6342	3624	1409	800	3277	1864
	AREA OF PANEL, FT2	A	30	30	61	60	16	16	36	36
PARTIAL	LENGTH OF ICE BIN COIL, FT	L	0	535	0	1052	0	333	0	654
	USAGE OF ELECTRICITY, KWH/YR	U	8979	8723	14973	14631	8223	8231	12354	12386
	EFFICIENCY (ANNUAL COP)	E	2.44	2.51	2.61	2.67	2.18	2.17	2.32	2.31
	VOLUME OF ICE BIN, FT3	V	946	473	1962	981	529	264	1106	553
	AREA OF PANEL, FT2	A	80	84	169	176	43	45	92	96
MINIMUM	LENGTH OF ICE BIN COIL, FT	L	0	458	0	896	0	290	0	562
	USAGE OF ELECTRICITY, KWH/YR	U	9691	9874	16932	16941	8547	8550	13367	13549
	EFFICIENCY (ANNUAL COP)	E	2.26	2.22	2.31	2.31	2.09	2.09	2.14	2.12

ASTORIA, OREGON

GEOGRAPHICAL ZONE = N	LATITUDE (DEG) = 46.1	GROUND	AO = 50.62 F	AIR TEMP:	OUTDOOR	INDOOR
JANUARY WIND (MPH) = 8.0	LONGITUDE (DEG) = 123.9	TEMPERATURE	BO = 9.13 F	WINTER	25 F	70 F
COOLING(TOTAL/SENS.) = 1.01	ELEVATION (FT) = 8.	CONSTANTS:	PO = 0.771 RAD	SUMMER	72 F	78 F

BUILDING DESIGN MONTHLY THERMAL LOADS

MONTH	R-40 INSULATION BIN HEAT LEAK COEFFICIENTS(32F)		UNGLAZED PANEL HEAT	DOMESTIC WATER HEAT	MEDIUM INSULATION				HIGH INSULATION			
					HOUSE 1 1200 FT2		HOUSE 2 2400 FT2		HOUSE 3 1200 FT2		HOUSE 4 2400 FT2	
(M)	TB(M)	SD(M)	PAN(M)	QHW(M)	QH(M)	QC(M)	QH(M)	QC(M)	QH(M)	QC(M)	QH(M)	QC(M)
	MBTU/FT2		MBTU/FT2	MBTU	MBTU	MBTU	MBTU	MBTU	MBTU	MBTU	MBTU	MBTU
JAN	0.537	0.284	32.48	1470	7300	0	17130	0	2680	0	7830	0
FEB	0.456	0.234	41.35	1340	5950	0	14260	0	2020	0	5990	0
MAR	0.518	0.255	51.10	1460	5970	0	14550	0	2170	0	6100	0
APR	0.559	0.266	60.73	1360	4490	0	11180	0	1510	0	4730	0
MAY	0.671	0.315	77.07	1330	3470	0	8750	0	870	0	3550	0
JUN	0.742	0.351	80.95	1230	2320	0	6450	0	320	360	2230	520
JUL	0.845	0.407	95.85	1220	1720	660	5330	0	0	1000	1600	1470
AUG	0.881	0.435	96.81	1210	1510	750	4930	0	0	1200	1450	1750
SEP	0.839	0.424	83.18	1190	1830	430	5450	0	260	750	1910	1060
OCT	0.804	0.417	65.27	1290	2890	0	7830	0	750	150	3200	0
NOV	0.690	0.365	43.60	1310	4930	0	12410	0	1640	0	5330	0
DEC	0.615	0.328	38.31	1420	6450	0	15470	0	2260	0	7010	0
ANNUAL THERMAL LOADS (MBTU)				15830	48830	1840	123740	0	14480	3460	50930	4800
DESIGN HOURLY THERMAL LOADS (BTU/HR)					27867	2815	54170	826	16207	9378	31047	13709

CALCULATED ACES DESIGNS

ACES SIZE	SYSTEM DESIGN PARAMETERS		HOUSE 1 ICE MAKER	HOUSE 1 BRINE CHILLER	HOUSE 2 ICE MAKER	HOUSE 2 BRINE CHILLER	HOUSE 3 ICE MAKER	HOUSE 3 BRINE CHILLER	HOUSE 4 ICE MAKER	HOUSE 4 BRINE CHILLER
FULL	VOLUME OF ICE BIN, FT3	V					307	157	97	51
	AREA OF PANEL, FT2	A					50	52	169	170
	LENGTH OF ICE BIN COIL, FT	L					0	202	0	311
	USAGE OF ELECTRICITY, KWH/YR	U					3721	3719	7876	7868
	EFFICIENCY (ANNUAL COP)	E					2.66	2.66	2.66	2.66
PARTIAL	VOLUME OF ICE BIN, FT3	V					346	174	479	241
	AREA OF PANEL, FT2	A					49	50	128	131
	LENGTH OF ICE BIN COIL, FT	L					0	205	0	377
	USAGE OF ELECTRICITY, KWH/YR	U					3709	3723	8051	8047
	EFFICIENCY (ANNUAL COP)	E					2.67	2.66	2.60	2.61
MINIMUM	VOLUME OF ICE BIN, FT3	V	813	406	1722	861	384	192	861	430
	AREA OF PANEL, FT2	A	102	108	221	232	47	49	108	112
	LENGTH OF ICE BIN COIL, FT	L	0	367	0	721	0	207	0	406
	USAGE OF ELECTRICITY, KWH/YR	U	7850	7844	16818	16802	3715	3728	8058	8089
	EFFICIENCY (ANNUAL COP)	E	2.48	2.48	2.43	2.43	2.66	2.65	2.60	2.59

MEDFORD, OREGON

GEOGRAPHICAL ZONE = N	LATITUDE (DEG) = 42.4	GROUND	AO = 52.74 F	AIR TEMP:	OUTDOOR	INDOOR
JANUARY WIND (MPH) = 5.0	LONGITUDE (DEG) = 122.9	TEMPERATURE	BO = 16.50 F	WINTER	19 F	70 F
COOLING(TOTAL/SENS.) = 1.00	ELEVATION (FT) = 1298.	CONSTANTS:	PO = 0.579 RAD	SUMMER	93 F	78 F

BUILDING DESIGN MONTHLY THERMAL LOADS

MONTH	R-40 INSULATION BIN HEAT LEAK COEFFICIENTS(32F)		UNGLAZED PANEL HEAT	DOMESTIC WATER HEAT	MEDIUM INSULATION HOUSE 1 1200 FT2		MEDIUM INSULATION HOUSE 2 2400 FT2		HIGH INSULATION HOUSE 3 1200 FT2		HIGH INSULATION HOUSE 4 2400 FT2	
(M)	TB(M)	SD(M)	PAN(M)	QHW(M)	QH(M)	QC(M)	QH(M)	QC(M)	QH(M)	QC(M)	QH(M)	QC(M)
	MBTU/FT2		MBTU/FT2	MBTU	MBTU	MBTU	MBTU	MBTU	MBTU	MBTU	MBTU	MBTU
JAN	0.458	0.251	23.36	1550	8420	0	19260	0	3310	0	9020	0
FEB	0.388	0.198	36.23	1400	6400	0	15070	0	2350	0	6420	0
MAR	0.488	0.229	52.56	1480	5810	0	13860	0	2150	0	5990	0
APR	0.600	0.270	69.58	1330	4150	0	10050	0	1350	700	4320	1040
MAY	0.798	0.360	84.09	1240	2830	1100	7410	1550	710	1540	2910	2330
JUN	0.932	0.432	97.23	1090	1280	2330	4070	3500	0	2920	1300	4370
JUL	1.081	0.518	120.31	1060	0	3950	2030	6190	0	4510	0	6760
AUG	1.113	0.553	108.78	1070	0	3590	2060	5590	0	4110	0	6150
SEP	1.020	0.525	83.51	1090	1160	2180	3810	3260	0	2640	1440	3950
OCT	0.915	0.489	58.90	1250	2970	0	7730	0	1020	780	3640	1110
NOV	0.719	0.397	30.06	1330	5260	0	12850	0	2040	0	5950	0
DEC	0.573	0.322	16.29	1490	8030	0	18470	0	3280	0	8980	0
ANNUAL THERMAL LOADS (MBTU)				15380	46310	13150	116670	20090	16210	17200	49970	25710
DESIGN HOURLY THERMAL LOADS (BTU/HR)					31459	15104	61146	24194	18641	17186	35731	28423

CALCULATED ACES DESIGNS

ACES SIZE	SYSTEM DESIGN PARAMETERS		HOUSE 1 ICE MAKER	HOUSE 1 BRINE CHILLER	HOUSE 2 ICE MAKER	HOUSE 2 BRINE CHILLER	HOUSE 3 ICE MAKER	HOUSE 3 BRINE CHILLER	HOUSE 4 ICE MAKER	HOUSE 4 BRINE CHILLER
FULL	VOLUME OF ICE BIN, FT3	V	2892	1479	3258	1673	2846	1660	5941	3028
	AREA OF PANEL, FT2	A	78	89	319	333	0	0	10	22
	LENGTH OF ICE BIN COIL, FT	L	0	478	0	871	0	305	0	582
	USAGE OF ELECTRICITY, KWH/YR	U	7582	7617	15788	15840	4585	4459	8514	8558
	EFFICIENCY (ANNUAL COP)	E	2.89	2.88	2.82	2.81	3.12	3.21	3.13	3.12
PARTIAL	VOLUME OF ICE BIN, FT3	V	1907	970	2593	1318	1648	942	3460	1758
	AREA OF PANEL, FT2	A	123	129	377	397	31	31	71	81
	LENGTH OF ICE BIN COIL, FT	L	0	455	0	846	0	286	0	546
	USAGE OF ELECTRICITY, KWH/YR	U	7927	8074	16093	16101	5381	5401	9648	9674
	EFFICIENCY (ANNUAL COP)	E	2.77	2.72	2.77	2.77	2.66	2.65	2.77	2.76
MINIMUM	VOLUME OF ICE BIN, FT3	V	923	461	1927	963	451	225	978	489
	AREA OF PANEL, FT2	A	209	222	442	468	103	110	228	242
	LENGTH OF ICE BIN COIL, FT	L	0	414	0	813	0	239	0	466
	USAGE OF ELECTRICITY, KWH/YR	U	8340	8332	16315	16303	5919	5915	10483	10601
	EFFICIENCY (ANNUAL COP)	E	2.63	2.63	2.73	2.73	2.41	2.42	2.54	2.52

PORTLAND, OREGON

GEOGRAPHICAL ZONE	= N	LATITUDE (DEG)	= 45.6	GROUND	AO = 52.38 F	AIR TEMP:	OUTDOOR	INDOOR
JANUARY WIND (MPH)	= 10.0	LONGITUDE (DEG)	= 122.6	TEMPERATURE	BO = 13.16 F	WINTER	17 F	70 F
COOLING(TOTAL/SENS.)	= 1.00	ELEVATION (FT)	= 21.	CONSTANTS:	PO = 0.642 RAD	SUMMER	89 F	78 F

BUILDING DESIGN MONTHLY THERMAL LOADS

MONTH	R-40 INSULATION BIN HEAT LEAK COEFFICIENTS(32F)		UNGLAZED PANEL HEAT	DOMESTIC WATER HEAT	MEDIUM INSULATION				HIGH INSULATION			
					HOUSE 1 1200 FT2		HOUSE 2 2400 FT2		HOUSE 3 1200 FT2		HOUSE 4 2400 FT2	
(M)	TB(M)	SD(M)	PAN(M)	QHW(M)	QH(M)	QC(M)	QH(M)	QC(M)	QH(M)	QC(M)	QH(M)	QC(M)
	MBTU/FT2		MBTU/FT2	MBTU	MBTU	MBTU	MBTU	MBTU	MBTU	MBTU	MBTU	MBTU
JAN	0.515	0.277	27.70	1500	8560	0	19560	0	3600	0	9670	0
FEB	0.437	0.224	40.03	1360	6200	0	14740	0	2150	0	6280	0
MAR	0.523	0.251	55.23	1460	5720	0	13950	0	2050	0	5850	0
APR	0.602	0.278	69.46	1330	3990	0	9910	0	1230	280	4150	0
MAY	0.762	0.350	83.49	1270	2660	560	7140	0	530	880	2630	1290
JUN	0.867	0.405	91.97	1140	1430	1130	4600	1560	0	1590	1350	2330
JUL	0.997	0.479	114.52	1120	680	2630	2880	3970	0	3270	0	4830
AUG	1.032	0.511	112.05	1120	550	2300	2660	3430	0	2910	0	4300
SEP	0.961	0.491	89.41	1130	1090	1220	3860	1680	0	1680	1220	2450
OCT	0.888	0.468	66.33	1250	2480	0	6890	0	640	410	2900	0
NOV	0.728	0.394	47.09	1310	4790	0	12050	0	1720	0	5400	0
DEC	0.614	0.336	33.77	1450	7180	0	16880	0	2820	0	8160	0
ANNUAL THERMAL LOADS (MBTU)				15440	45330	7840	115120	10640	14740	11020	47610	15200
DESIGN HOURLY THERMAL LOADS (BTU/HR)					31883	12155	61926	18482	19302	15468	36992	25153

CALCULATED ACES DESIGNS

ACES SIZE	SYSTEM DESIGN PARAMETERS		HOUSE 1 ICE MAKER	HOUSE 1 BRINE CHILLER	HOUSE 2 ICE MAKER	HOUSE 2 BRINE CHILLER	HOUSE 3 ICE MAKER	HOUSE 3 BRINE CHILLER	HOUSE 4 ICE MAKER	HOUSE 4 BRINE CHILLER
FULL	VOLUME OF ICE BIN, FT3	V					2410	1236	3374	1744
	AREA OF PANEL, FT2	A					0	11	56	61
	LENGTH OF ICE BIN COIL, FT	L					0	304	0	563
	USAGE OF ELECTRICITY, KWH/YR	U					3963	3978	7990	8035
	EFFICIENCY (ANNUAL COP)	E					3.05	3.03	2.87	2.85
PARTIAL	VOLUME OF ICE BIN, FT3	V					1441	736	2204	1130
	AREA OF PANEL, FT2	A					27	30	88	92
	LENGTH OF ICE BIN COIL, FT	L					0	286	0	534
	USAGE OF ELECTRICITY, KWH/YR	U					4331	4345	8520	8538
	EFFICIENCY (ANNUAL COP)	E					2.79	2.78	2.69	2.69
MINIMUM	VOLUME OF ICE BIN, FT3	V	932	466	1950	975	473	236	1035	517
	AREA OF PANEL, FT2	A	133	139	283	290	65	69	148	154
	LENGTH OF ICE BIN COIL, FT	L	0	420	0	823	0	248	0	484
	USAGE OF ELECTRICITY, KWH/YR	U	7359	7357	15336	15583	4802	4682	8911	8898
	EFFICIENCY (ANNUAL COP)	E	2.73	2.73	2.70	2.65	2.51	2.58	2.57	2.58

MIDDLETOWN, PENNSYLVANIA

GEOGRAPHICAL ZONE	= B	LATITUDE (DEG)	= 40.2	GROUND	AO = 52.67 F	AIR TEMP:	OUTDOOR	INDOOR
JANUARY WIND (MPH)	= 11.0	LONGITUDE (DEG)	= 76.8	TEMPERATURE	BO = 23.32 F	WINTER	7 F	70 F
COOLING(TOTAL/SENS.)	= 1.13	ELEVATION (FT)	= 308.	CONSTANTS:	PO = 0.607 RAD	SUMMER	92 F	78 F

BUILDING DESIGN MONTHLY THERMAL LOADS

MONTH	R-40 INSULATION BIN HEAT LEAK COEFFICIENTS(32F)		UNGLAZED PANEL HEAT	DOMESTIC WATER HEAT	MEDIUM INSULATION				HIGH INSULATION			
					HOUSE 1 1200 FT2		HOUSE 2 2400 FT2		HOUSE 3 1200 FT2		HOUSE 4 2400 FT2	
(M)	TB(M) MBTU/FT2	SD(M) MBTU/FT2	PAN(M) MBTU/FT2	QHW(M) MBTU	QH(M) MBTU	QC(M) MBTU	QH(M) MBTU	QC(M) MBTU	QH(M) MBTU	QC(M) MBTU	QH(M) MBTU	QC(M) MBTU
JAN	0.331	0.198	17.76	1570	11920	0	26070	0	5780	0	13910	0
FEB	0.257	0.136	23.02	1450	10270	0	22640	0	4690	0	11490	0
MAR	0.360	0.160	54.96	1550	8260	0	18950	0	3360	0	8610	0
APR	0.525	0.221	82.39	1390	4280	0	10670	0	1340	590	4190	0
MAY	0.792	0.342	107.87	1290	1780	1140	5310	1400	0	1910	1580	2620
JUN	0.995	0.448	119.95	1110	0	2530	1610	3590	0	3740	0	4840
JUL	1.201	0.567	126.34	1040	0	3820	0	5390	0	5110	0	6790
AUG	1.253	0.620	120.76	1010	0	3440	0	4800	0	4600	0	6000
SEP	1.138	0.589	99.54	1030	450	1940	1820	2630	0	2700	0	3510
OCT	0.985	0.536	78.89	1180	2080	480	5920	0	670	800	2720	1040
NOV	0.718	0.412	46.66	1280	5250	0	12860	0	2150	0	6270	0
DEC	0.500	0.300	22.04	1470	10330	0	22940	0	5050	0	12430	0
ANNUAL THERMAL LOADS (MBTU)				15370	54620	13350	128790	17810	23040	19450	61200	24800
DESIGN HOURLY THERMAL LOADS (BTU/HR)					38633	14760	75078	22466	23717	17029	45518	27495

CALCULATED ACES DESIGNS

ACES SIZE	SYSTEM DESIGN PARAMETERS		HOUSE 1 ICE MAKER	HOUSE 1 BRINE CHILLER	HOUSE 2 ICE MAKER	HOUSE 2 BRINE CHILLER	HOUSE 3 ICE MAKER	HOUSE 3 BRINE CHILLER	HOUSE 4 ICE MAKER	HOUSE 4 BRINE CHILLER
	VOLUME OF ICE BIN, FT3	V	3300	1663	4294	2178	4061	2326	7069	3537
	AREA OF PANEL, FT2	A	153	170	481	507	0	0	40	63
FULL	LENGTH OF ICE BIN COIL, FT	L	0	581	0	1077	0	393	0	734
	USAGE OF ELECTRICITY, KWH/YR	U	8420	8437	17015	17054	5417	5145	9761	9764
	EFFICIENCY (ANNUAL COP)	E	2.90	2.89	2.79	2.78	3.13	3.29	3.04	3.04
	VOLUME OF ICE BIN, FT3	V	2275	1144	3427	1729	2371	1333	4251	2127
	AREA OF PANEL, FT2	A	220	235	538	564	48	47	146	169
PARTIAL	LENGTH OF ICE BIN COIL, FT	L	0	555	0	1047	0	368	0	692
	USAGE OF ELECTRICITY, KWH/YR	U	8811	8822	17373	17363	6348	6187	10675	10913
	EFFICIENCY (ANNUAL COP)	E	2.77	2.77	2.73	2.73	2.67	2.74	2.78	2.72
	VOLUME OF ICE BIN, FT3	V	1250	625	2560	1280	681	340	1434	717
	AREA OF PANEL, FT2	A	290	301	600	621	156	163	331	347
MINIMUM	LENGTH OF ICE BIN COIL, FT	L	0	515	0	1008	0	311	0	605
	USAGE OF ELECTRICITY, KWH/YR	U	9311	9307	17705	17877	7063	7059	12027	12019
	EFFICIENCY (ANNUAL COP)	E	2.62	2.62	2.68	2.65	2.40	2.40	2.47	2.47

PHILADELPHIA, PENNSYLVANIA

GEOGRAPHICAL ZONE	= B	LATITUDE (DEG)	= 39.9	GROUND	AO = 53.54 F	AIR TEMP:	OUTDOOR	INDOOR
JANUARY WIND (MPH)	= 12.0	LONGITUDE (DEG)	= 75.3	TEMPERATURE	BO = 22.43 F	WINTER	10 F	70 F
COOLING(TOTAL/SENS.)	= 1.13	ELEVATION (FT)	= 5.	CONSTANTS:	PO = 0.593 RAD	SUMMER	90 F	78 F

BUILDING DESIGN MONTHLY THERMAL LOADS

MONTH	R-40 INSULATION BIN HEAT LEAK COEFFICIENTS (32F)		UNGLAZED PANEL HEAT	DOMESTIC WATER HEAT	MEDIUM INSULATION HOUSE 1 1200 FT2		MEDIUM INSULATION HOUSE 2 2400 FT2		HIGH INSULATION HOUSE 3 1200 FT2		HIGH INSULATION HOUSE 4 2400 FT2	
(M)	TB(M) MBTU/FT2	SD(M) MBTU/FT2	PAN(M) MBTU/FT2	QHW(M) MBTU	QH(M) MBTU	QC(M) MBTU	QH(M) MBTU	QC(M) MBTU	QH(M) MBTU	QC(M) MBTU	QH(M) MBTU	QC(M) MBTU
JAN	0.378	0.219	18.02	1600	11390	0	25040	0	5550	0	13420	0
FEB	0.303	0.158	21.34	1450	9640	0	21410	0	4260	0	10720	0
MAR	0.412	0.186	55.08	1530	7670	0	17810	0	2920	0	7920	0
APR	0.571	0.245	85.39	1350	3760	0	9620	0	1070	610	3600	810
MAY	0.830	0.363	115.96	1230	1510	1100	4630	1320	0	1930	1390	2530
JUN	1.022	0.464	117.90	1050	0	2360	1360	3140	0	3710	0	4580
JUL	1.220	0.578	139.12	990	0	3530	0	4500	0	5090	0	6540
AUG	1.267	0.627	126.47	980	0	3010	0	3940	0	4070	0	5050
SEP	1.151	0.595	97.20	1020	0	1630	1190	2080	0	2540	0	3030
OCT	1.003	0.544	79.91	1190	1920	460	5580	0	610	770	2540	990
NOV	0.745	0.423	51.18	1310	4810	0	11860	0	1930	0	5780	0
DEC	0.537	0.317	17.63	1500	10080	0	22450	0	4880	0	12130	0
ANNUAL THERMAL LOADS (MBTU)				15200	50780	12090	120950	14980	21220	18720	57500	23530
DESIGN HOURLY THERMAL LOADS (BTU/HR)					36629	12411	71174	18374	22376	14478	42928	22381

CALCULATED ACES DESIGNS

ACES SIZE	SYSTEM DESIGN PARAMETERS		HOUSE 1 ICE MAKER	HOUSE 1 BRINE CHILLER	HOUSE 2 ICE MAKER	HOUSE 2 BRINE CHILLER	HOUSE 3 ICE MAKER	HOUSE 3 BRINE CHILLER	HOUSE 4 ICE MAKER	HOUSE 4 BRINE CHILLER
	VOLUME OF ICE BIN, FT3	V	3002	1519	3596	1815	3782	2174	6513	3244
	AREA OF PANEL, FT2	A	168	189	544	575	0	0	45	68
FULL	LENGTH OF ICE BIN COIL, FT	L	0	549	0	1005	0	370	0	690
	USAGE OF ELECTRICITY, KWH/YR	U	7963	7923	16013	16014	5105	5026	9189	9234
	EFFICIENCY (ANNUAL COP)	E	2.87	2.89	2.77	2.76	3.16	3.21	3.07	3.05
	VOLUME OF ICE BIN, FT3	V	2102	1060	3031	1524	2222	1252	3952	1970
	AREA OF PANEL, FT2	A	237	253	588	616	48	47	156	184
PARTIAL	LENGTH OF ICE BIN COIL, FT	L	0	525	0	983	0	347	0	651
	USAGE OF ELECTRICITY, KWH/YR	U	8261	8273	16283	16275	5988	6006	10146	10152
	EFFICIENCY (ANNUAL COP)	E	2.77	2.76	2.72	2.72	2.70	2.69	2.78	2.78
	VOLUME OF ICE BIN, FT3	V	1203	601	2466	1233	662	331	1391	695
	AREA OF PANEL, FT2	A	305	320	633	663	165	176	354	375
MINIMUM	LENGTH OF ICE BIN COIL, FT	L	0	489	0	958	0	295	0	573
	USAGE OF ELECTRICITY, KWH/YR	U	8712	8706	16412	16544	6694	6690	11240	11231
	EFFICIENCY (ANNUAL COP)	E	2.63	2.63	2.70	2.68	2.41	2.41	2.51	2.51

PITTSBURGH, PENNSYLVANIA

GEOGRAPHICAL ZONE	= B	LATITUDE (DEG)	= 40.5	GROUND	AO = 50.22 F	AIR TEMP:	OUTDOOR	INDOOR
JANUARY WIND (MPH)	= 11.0	LONGITUDE (DEG)	= 80.2	TEMPERATURE	BO = 22.82 F	WINTER	1 F	70 F
COOLING(TOTAL/SENS.)	= 1.10	ELEVATION (FT)	= 1137.	CONSTANTS:	PO = 0.614 RAD	SUMMER	87 F	78 F

BUILDING DESIGN MONTHLY THERMAL LOADS

MONTH	R-40 INSULATION BIN HEAT LEAK COEFFICIENTS(32F)		UNGLAZED PANEL HEAT	DOMESTIC WATER HEAT	MEDIUM INSULATION HOUSE 1 1200 FT2		MEDIUM INSULATION HOUSE 2 2400 FT2		HIGH INSULATION HOUSE 3 1200 FT2		HIGH INSULATION HOUSE 4 2400 FT2	
(M)	TB(M) MBTU/FT2	SD(M) MBTU/FT2	PAN(M) MBTU/FT2	QHW(M) MBTU	QH(M) MBTU	QC(M) MBTU	QH(M) MBTU	QC(M) MBTU	QH(M) MBTU	QC(M) MBTU	QH(M) MBTU	QC(M) MBTU
JAN	0.251	0.158	9.20	1570	13610	0	29350	0	6970	0	16200	0
FEB	0.184	0.100	17.00	1450	11380	0	24770	0	5380	0	12830	0
MAR	0.277	0.119	36.24	1580	9830	0	22090	0	4080	0	10400	0
APR	0.439	0.179	72.64	1450	5160	0	12550	0	1630	520	4910	0
MAY	0.698	0.296	104.26	1370	2440	820	6760	0	530	1570	2220	2140
JUN	0.899	0.401	109.01	1200	790	1920	3010	2590	0	3070	0	3860
JUL	1.099	0.516	123.99	1140	0	2830	1190	3980	0	4080	0	5280
AUG	1.152	0.569	111.43	1100	0	2610	1080	3600	0	3740	0	4730
SEP	1.043	0.541	100.40	1090	760	1560	2750	2050	0	2250	1010	2880
OCT	0.892	0.488	74.33	1210	2660	0	7270	0	890	670	3250	810
NOV	0.634	0.368	36.23	1290	6520	0	15390	0	2770	0	7720	0
DEC	0.417	0.258	12.71	1470	11860	0	25930	0	6100	0	14490	0
ANNUAL THERMAL LOADS (MBTU)				15920	65010	9740	152140	12220	28350	15900	73030	19700
DESIGN HOURLY THERMAL LOADS (BTU/HR)					42656	10404	82914	14555	26453	14171	50808	21626

CALCULATED ACES DESIGNS

ACES SIZE	SYSTEM DESIGN PARAMETERS		HOUSE 1 ICE MAKER	HOUSE 1 BRINE CHILLER	HOUSE 2 ICE MAKER	HOUSE 2 BRINE CHILLER	HOUSE 3 ICE MAKER	HOUSE 3 BRINE CHILLER	HOUSE 4 ICE MAKER	HOUSE 4 BRINE CHILLER
	VOLUME OF ICE BIN, FT3	V					4017	1996	4791	2435
	AREA OF PANEL, FT2	A					27	47	279	312
FULL	LENGTH OF ICE BIN COIL, FT	L					0	425	0	775
	USAGE OF ELECTRICITY, KWH/YR	U					5593	5602	10742	10761
	EFFICIENCY (ANNUAL COP)	E					3.15	3.15	2.96	2.96
	VOLUME OF ICE BIN, FT3	V					2404	1196	3218	1629
	AREA OF PANEL, FT2	A					119	140	438	470
PARTIAL	LENGTH OF ICE BIN COIL, FT	L					0	400	0	738
	USAGE OF ELECTRICITY, KWH/YR	U					6138	6273	11397	11410
	EFFICIENCY (ANNUAL COP)	E					2.87	2.81	2.79	2.79
	VOLUME OF ICE BIN, FT3	V	1406	703	2863	1431	791	395	1646	823
	AREA OF PANEL, FT2	A	595	*629	*1224	*1292	335	355	708	748
MINIMUM	LENGTH OF ICE BIN COIL, FT	L	0	570	0	1115	0	349	0	678
	USAGE OF ELECTRICITY, KWH/YR	U	9676	9668	19418	19332	6882	6878	12107	12099
	EFFICIENCY (ANNUAL COP)	E	2.75	2.75	2.72	2.73	2.56	2.56	2.63	2.63

*UNGLAZED PANEL EXCEEDS A PRACTICAL SIZE, AN ALTERNATIVE SUPPLEMENTARY HEAT SOURCE SHOULD BE USED IN THIS DESIGN.

WILKES-BARRE, PENNSYLVANIA

GEOGRAPHICAL ZONE	= B	LATITUDE (DEG)	= 41.3	GROUND	AO = 49.35 F	AIR TEMP:	OUTDOOR	INDOOR
JANUARY WIND (MPH)	= 8.0	LONGITUDE (DEG)	= 75.7	TEMPERATURE	BO = 22.86 F	WINTER	1 F	70 F
COOLING(TOTAL/SENS.)	= 1.10	ELEVATION (FT)	= 930.	CONSTANTS:	PO = 0.621 RAD	SUMMER	87 F	78 F

BUILDING DESIGN MONTHLY THERMAL LOADS

MONTH	R-40 INSULATION BIN HEAT LEAK COEFFICIENTS (32F)		UNGLAZED PANEL HEAT	DOMESTIC WATER HEAT	MEDIUM INSULATION				HIGH INSULATION			
					HOUSE 1 1200 FT2		HOUSE 2 2400 FT2		HOUSE 3 1200 FT2		HOUSE 4 2400 FT2	
(M)	TB(M) MBTU/FT2	SD(M) MBTU/FT2	PAN(M) MBTU/FT2	QHW(M) MBTU	QH(M) MBTU	QC(M) MBTU	QH(M) MBTU	QC(M) MBTU	QH(M) MBTU	QC(M) MBTU	QH(M) MBTU	QC(M) MBTU
JAN	0.219	0.142	11.14	1560	13220	0	28580	0	6480	0	15220	0
FEB	0.153	0.085	19.90	1450	10820	0	23680	0	4800	0	11680	0
MAR	0.241	0.101	32.97	1590	10020	0	22450	0	4060	0	10280	0
APR	0.404	0.162	63.09	1470	5310	0	12850	0	1680	460	4990	0
MAY	0.662	0.278	82.94	1400	2800	650	7510	0	590	1270	2520	1760
JUN	0.865	0.384	95.50	1230	800	1890	3070	2540	0	2920	0	3820
JUL	1.066	0.499	106.99	1170	0	2790	1240	3900	0	4090	0	5260
AUG	1.120	0.553	103.91	1130	0	2640	1230	3720	0	3770	0	4850
SEP	1.014	0.526	85.51	1110	870	1420	3070	1850	0	2110	1080	2720
OCT	0.863	0.474	61.06	1220	2950	0	7830	0	1010	530	3520	0
NOV	0.606	0.354	32.20	1290	6630	0	15620	0	2740	0	7610	0
DEC	0.387	0.243	15.98	1460	11090	0	24400	0	5290	0	12900	0
ANNUAL THERMAL LOADS (MBTU)				16080	64510	9390	151530	12010	26650	15150	69800	18410
DESIGN HOURLY THERMAL LOADS (BTU/HR)					42993	10844	83589	15375	26526	14846	50953	22774

CALCULATED ACES DESIGNS

ACES SIZE	SYSTEM DESIGN PARAMETERS		HOUSE 1 ICE MAKER	HOUSE 1 BRINE CHILLER	HOUSE 2 ICE MAKER	HOUSE 2 BRINE CHILLER	HOUSE 3 ICE MAKER	HOUSE 3 BRINE CHILLER	HOUSE 4 ICE MAKER	HOUSE 4 BRINE CHILLER
	VOLUME OF ICE BIN, FT3	V					3645	1855	4577	2361
	AREA OF PANEL, FT2	A					31	44	208	224
FULL	LENGTH OF ICE BIN COIL, FT	L					0	423	0	774
	USAGE OF ELECTRICITY, KWH/YR	U					5439	5462	10467	10437
	EFFICIENCY (ANNUAL COP)	E					3.12	3.10	2.92	2.93
	VOLUME OF ICE BIN, FT3	V					2195	1113	3065	1569
	AREA OF PANEL, FT2	A					97	106	323	342
PARTIAL	LENGTH OF ICE BIN COIL, FT	L					0	398	0	736
	USAGE OF ELECTRICITY, KWH/YR	U					5969	6112	11099	11115
	EFFICIENCY (ANNUAL COP)	E					2.84	2.77	2.75	2.75
	VOLUME OF ICE BIN, FT3	V	1369	684	2791	1395	745	372	1554	777
	AREA OF PANEL, FT2	A	442	467	911	962	237	251	504	533
MINIMUM	LENGTH OF ICE BIN COIL, FT	L	0	572	0	1120	0	347	0	675
	USAGE OF ELECTRICITY, KWH/YR	U	9673	9664	19466	19451	6707	6701	11804	11793
	EFFICIENCY (ANNUAL COP)	E	2.73	2.73	2.70	2.71	2.53	2.53	2.59	2.59

CHARLESTON, SOUTH CAROLINA

GEOGRAPHICAL ZONE	= D	LATITUDE (DEG)	= 32.9	GROUND	AO = 63.76 F	AIR TEMP:	OUTDOOR	INDOOR
JANUARY WIND (MPH)	= 10.0	LONGITUDE (DEG)	= 80.0	TEMPERATURE	BO = 16.37 F	WINTER	24 F	70 F
COOLING(TOTAL/SENS.)	= 1.27	ELEVATION (FT)	= 45.	CONSTANTS:	PO = 0.553 RAD	SUMMER	91 F	78 F

BUILDING DESIGN MONTHLY THERMAL LOADS

MONTH	R-40 INSULATION BIN HEAT LEAK COEFFICIENTS(32F)		UNGLAZED PANEL HEAT	DOMESTIC WATER HEAT	MEDIUM INSULATION HOUSE 1 1200 FT2		HOUSE 2 2400 FT2		HIGH INSULATION HOUSE 3 1200 FT2		HOUSE 4 2400 FT2	
(M)	TB(M)	SD(M)	PAN(M)	QHW(M)	QH(M)	QC(M)	QH(M)	QC(M)	QH(M)	QC(M)	QH(M)	QC(M)
	MBTU/FT2		MBTU/FT2	MBTU	MBTU	MBTU	MBTU	MBTU	MBTU	MBTU	MBTU	MBTU
JAN	0.867	0.454	70.66	1350	4400	0	10860	0	1910	0	5460	0
FEB	0.761	0.384	80.10	1210	3200	0	8150	0	1200	630	3790	870
MAR	0.905	0.436	101.15	1280	2700	690	7220	0	900	1080	3170	1530
APR	1.006	0.473	127.87	1130	980	1810	3410	2530	0	2490	1120	3400
MAY	1.216	0.570	136.98	1030	0	3310	0	4850	0	4530	0	6030
JUN	1.334	0.633	143.75	900	0	4940	0	6390	0	5820	0	8010
JUL	1.492	0.724	145.13	860	0	6500	0	9020	0	6930	0	9940
AUG	1.520	0.757	147.08	870	0	6560	0	9120	0	6840	0	9770
SEP	1.410	0.721	129.16	910	0	4620	0	6170	0	5220	0	7040
OCT	1.316	0.690	110.38	1050	0	2310	1730	3210	0	2850	810	3760
NOV	1.108	0.591	87.61	1140	1680	910	4800	1190	660	1280	2460	1700
DEC	0.978	0.523	68.46	1290	3780	0	9480	0	1690	380	4980	0
ANNUAL THERMAL LOADS (MBTU)				13020	16740	31650	45650	42480	6360	38050	21790	52050
DESIGN HOURLY THERMAL LOADS (BTU/HR)					24676	21369	47754	35018	15796	20108	30193	34850

CALCULATED ACES DESIGNS

ACES SIZE	SYSTEM DESIGN PARAMETERS		HOUSE 1 ICE MAKER	HOUSE 1 BRINE CHILLER	HOUSE 2 ICE MAKER	HOUSE 2 BRINE CHILLER	HOUSE 3 ICE MAKER	HOUSE 3 BRINE CHILLER	HOUSE 4 ICE MAKER	HOUSE 4 BRINE CHILLER
	VOLUME OF ICE BIN, FT3	V	2284	1358	5498	3256	865	503	2330	1356
	AREA OF PANEL, FT2	A	0	0	0	0	0	0	0	0
FULL	LENGTH OF ICE BIN COIL, FT	L	0	382	0	759	0	229	0	457
	USAGE OF ELECTRICITY, KWH/YR	U	7274	7093	10972	10647	7961	7794	11288	11066
	EFFICIENCY (ANNUAL COP)	E	2.47	2.54	2.70	2.78	2.11	2.16	2.25	2.30
	VOLUME OF ICE BIN, FT3	V	1408	812	3314	1911	584	327	1480	836
	AREA OF PANEL, FT2	A	12	13	29	30	0	0	14	15
PARTIAL	LENGTH OF ICE BIN COIL, FT	L	0	359	0	712	0	217	0	430
	USAGE OF ELECTRICITY, KWH/YR	U	8151	7973	12576	12352	8110	8111	12077	11866
	EFFICIENCY (ANNUAL COP)	E	2.21	2.26	2.36	2.40	2.07	2.07	2.11	2.14
	VOLUME OF ICE BIN, FT3	V	533	266	1130	565	302	151	631	315
	AREA OF PANEL, FT2	A	31	33	67	72	14	16	38	41
MINIMUM	LENGTH OF ICE BIN COIL, FT	L	0	312	0	612	0	197	0	381
	USAGE OF ELECTRICITY, KWH/YR	U	8420	8412	13393	13373	8239	8242	12324	12319
	EFFICIENCY (ANNUAL COP)	E	2.14	2.14	2.21	2.22	2.04	2.04	2.06	2.07

GREENVILLE, SOUTH CAROLINA

GEOGRAPHICAL ZONE	= D	LATITUDE (DEG)	= 34.9	GROUND	AO = 60.26 F	AIR TEMP:	OUTDOOR	INDOOR
JANUARY WIND (MPH)	= 8.0	LONGITUDE (DEG)	= 82.2	TEMPERATURE	BO = 18.71 F	WINTER	18 F	70 F
COOLING(TOTAL/SENS.)	= 1.16	ELEVATION (FT)	= 957.	CONSTANTS:	PO = 0.565 RAD	SUMMER	93 F	78 F

BUILDING DESIGN MONTHLY THERMAL LOADS

MONTH	R-40 INSULATION BIN HEAT LEAK COEFFICIENTS(32F)		UNGLAZED PANEL HEAT	DOMESTIC WATER HEAT	MEDIUM INSULATION				HIGH INSULATION			
					HOUSE 1 1200 FT2		HOUSE 2 2400 FT2		HOUSE 3 1200 FT2		HOUSE 4 2400 FT2	
(M)	TB(M)	SD(M)	PAN(M)	QHW(M)	QH(M)	QC(M)	QH(M)	QC(M)	QH(M)	QC(M)	QH(M)	QC(M)
	MBTU/FT2		MBTU/FT2	MBTU	MBTU	MBTU	MBTU	MBTU	MBTU	MBTU	MBTU	MBTU
JAN	0.693	0.371	46.22	1450	6290	0	14940	0	2640	0	7230	0
FEB	0.599	0.304	54.46	1300	4900	0	11840	0	1900	0	5440	0
MAR	0.733	0.348	78.68	1370	4170	0	10390	0	1490	490	4620	0
APR	0.856	0.394	110.44	1200	1740	1110	5170	1460	380	1670	1800	2380
MAY	1.086	0.500	121.91	1090	0	2350	2030	3380	0	3070	0	4180
JUN	1.232	0.577	130.71	930	0	3690	0	5360	0	4590	0	6380
JUL	1.405	0.677	132.87	890	0	5310	0	6880	0	5930	0	8260
AUG	1.439	0.715	134.44	900	0	5390	0	7290	0	5770	0	8060
SEP	1.325	0.680	125.09	940	0	3400	0	4620	0	3770	0	5230
OCT	1.210	0.641	101.65	1110	730	1140	2770	1610	0	1390	1200	1930
NOV	0.981	0.533	72.83	1210	2570	0	6910	0	1010	520	3460	710
DEC	0.822	0.451	51.99	1380	5340	0	12950	0	2330	0	6540	0
ANNUAL THERMAL LOADS (MBTU)				13770	25740	22390	67000	30600	9750	27200	30290	37130
DESIGN HOURLY THERMAL LOADS (BTU/HR)					29364	19306	56921	30147	18476	18557	35370	31194

CALCULATED ACES DESIGNS

ACES SIZE	SYSTEM DESIGN PARAMETERS		HOUSE 1 ICE MAKER	HOUSE 1 BRINE CHILLER	HOUSE 2 ICE MAKER	HOUSE 2 BRINE CHILLER	HOUSE 3 ICE MAKER	HOUSE 3 BRINE CHILLER	HOUSE 4 ICE MAKER	HOUSE 4 BRINE CHILLER
	VOLUME OF ICE BIN, FT3	V	3771	2271	8565	4477	1744	1027	4125	2425
	AREA OF PANEL, FT2	A	0	0	0	10	0	0	0	0
FULL	LENGTH OF ICE BIN COIL, FT	L	0	473	0	920	0	286	0	562
	USAGE OF ELECTRICITY, KWH/YR	U	6091	5904	10032	10733	6090	6099	8947	8657
	EFFICIENCY (ANNUAL COP)	E	2.98	3.07	3.25	3.04	2.44	2.44	2.66	2.75
	VOLUME OF ICE BIN, FT3	V	2244	1315	5042	2618	1061	608	2464	1413
	AREA OF PANEL, FT2	A	27	26	55	62	12	13	30	30
PARTIAL	LENGTH OF ICE BIN COIL, FT	L	0	444	0	864	0	269	0	527
	USAGE OF ELECTRICITY, KWH/YR	U	7224	7051	11922	12085	6633	6642	10163	10173
	EFFICIENCY (ANNUAL COP)	E	2.51	2.57	2.74	2.70	2.24	2.24	2.34	2.34
	VOLUME OF ICE BIN, FT3	V	717	358	1518	759	379	189	804	402
	AREA OF PANEL, FT2	A	62	66	134	141	33	35	71	75
MINIMUM	LENGTH OF ICE BIN COIL, FT	L	0	378	0	741	0	232	0	451
	USAGE OF ELECTRICITY, KWH/YR	U	7903	7897	13665	13656	6993	6989	10872	11011
	EFFICIENCY (ANNUAL COP)	E	2.29	2.30	2.39	2.39	2.12	2.13	2.19	2.16

SUMTER, SOUTH CAROLINA

GEOGRAPHICAL ZONE = D	LATITUDE (DEG) = 33.9	GROUND AO = 63.11 F	AIR TEMP:	OUTDOOR	INDOOR
JANUARY WIND (MPH) = 7.0	LONGITUDE (DEG) = 80.4	TEMPERATURE BO = 17.80 F	WINTER	22 F	70 F
COOLING(TOTAL/SENS.) = 1.19	ELEVATION (FT) = 169.	CONSTANTS: PO = 0.551 RAD	SUMMER	94 F	78 F

BUILDING DESIGN MONTHLY THERMAL LOADS

MONTH	R-40 INSULATION BIN HEAT LEAK COEFFICIENTS(32F)		UNGLAZED PANEL HEAT	DOMESTIC WATER HEAT	MEDIUM INSULATION HOUSE 1 1200 FT2		MEDIUM INSULATION HOUSE 2 2400 FT2		HIGH INSULATION HOUSE 3 1200 FT2		HIGH INSULATION HOUSE 4 2400 FT2	
(M)	TB(M) MBTU/FT2	SD(M) MBTU/FT2	PAN(M) MBTU/FT2	QHW(M) MBTU	QH(M) MBTU	QC(M) MBTU	QH(M) MBTU	QC(M) MBTU	QH(M) MBTU	QC(M) MBTU	QH(M) MBTU	QC(M) MBTU
JAN	0.815	0.430	57.08	1380	4810	0	11790	0	2000	0	5710	0
FEB	0.712	0.360	62.70	1240	3700	0	9300	0	1390	330	4250	0
MAR	0.857	0.411	85.98	1300	3030	0	7960	0	980	740	3440	1030
APR	0.971	0.453	114.73	1140	1120	1570	3700	2220	0	2190	1220	3070
MAY	1.196	0.556	123.30	1040	0	3280	0	4750	0	4410	0	5790
JUN	1.328	0.627	129.10	890	0	4840	0	6510	0	5660	0	7700
JUL	1.496	0.724	135.98	860	0	6190	0	8440	0	6590	0	9270
AUG	1.525	0.759	127.83	860	0	6290	0	8670	0	6510	0	9140
SEP	1.409	0.722	112.82	900	0	4310	0	5800	0	4790	0	6400
OCT	1.303	0.686	93.71	1060	430	1890	1820	2580	0	2350	820	3060
NOV	1.080	0.580	73.68	1160	1650	710	4800	0	580	1030	2350	1370
DEC	0.935	0.505	53.42	1320	3990	0	10060	0	1680	0	5000	0
ANNUAL THERMAL LOADS (MBTU)				13150	18730	29080	49430	38970	6630	34600	22790	46830
DESIGN HOURLY THERMAL LOADS (BTU/HR)					26155	21557	50642	35200	16663	19968	31867	34141

CALCULATED ACES DESIGNS

ACES SIZE	SYSTEM DESIGN PARAMETERS		HOUSE 1 ICE MAKER	HOUSE 1 BRINE CHILLER	HOUSE 2 ICE MAKER	HOUSE 2 BRINE CHILLER	HOUSE 3 ICE MAKER	HOUSE 3 BRINE CHILLER	HOUSE 4 ICE MAKER	HOUSE 4 BRINE CHILLER
FULL	VOLUME OF ICE BIN, FT3	V	2695	1601	6284	3714	1175	686	2809	1646
	AREA OF PANEL, FT2	A	0	0	0	0	0	0	0	0
	LENGTH OF ICE BIN COIL, FT	L	0	410	0	812	0	249	0	490
	USAGE OF ELECTRICITY, KWH/YR	U	7007	6778	10378	10079	7264	7268	10282	10296
	EFFICIENCY (ANNUAL COP)	E	2.55	2.64	2.87	2.95	2.19	2.19	2.36	2.36
PARTIAL	VOLUME OF ICE BIN, FT3	V	1635	944	3752	2162	745	421	1733	987
	AREA OF PANEL, FT2	A	18	19	40	41	0	0	21	21
	LENGTH OF ICE BIN COIL, FT	L	0	385	0	761	0	235	0	461
	USAGE OF ELECTRICITY, KWH/YR	U	7728	7692	12369	12062	7757	7599	11383	11181
	EFFICIENCY (ANNUAL COP)	E	2.31	2.32	2.41	2.47	2.05	2.10	2.13	2.17
MINIMUM	VOLUME OF ICE BIN, FT3	V	574	287	1220	610	314	157	657	328
	AREA OF PANEL, FT2	A	42	45	93	97	22	24	49	52
	LENGTH OF ICE BIN COIL, FT	L	0	332	0	651	0	207	0	401
	USAGE OF ELECTRICITY, KWH/YR	U	8222	8216	13450	13440	7862	7857	11755	11749
	EFFICIENCY (ANNUAL COP)	E	2.17	2.17	2.21	2.21	2.03	2.03	2.06	2.06

HURON, SOUTH DAKOTA

GEOGRAPHICAL ZONE = H	LATITUDE (DEG) = 44.4	GROUND	AO = 45.10 F	AIR TEMP:	OUTDOOR	INDOOR
JANUARY WIND (MPH) = 12.0	LONGITUDE (DEG) = 98.2	TEMPERATURE	BO = 30.33 F	WINTER	-18 F	70 F
COOLING(TOTAL/SENS.) = 1.07	ELEVATION (FT) = 1281.	CONSTANTS:	PO = 0.598 RAD	SUMMER	93 F	78 F

BUILDING DESIGN MONTHLY THERMAL LOADS

MONTH	R-40 INSULATION BIN HEAT LEAK COEFFICIENTS(32F)		UNGLAZED PANEL HEAT	DOMESTIC WATER HEAT	MEDIUM INSULATION				HIGH INSULATION			
					HOUSE 1 1200 FT2		HOUSE 2 2400 FT2		HOUSE 3 1200 FT2		HOUSE 4 2400 FT2	
(M)	TB(M)	SD(M)	PAN(M)	QHW(M)	QH(M)	QC(M)	QH(M)	QC(M)	QH(M)	QC(M)	QH(M)	QC(M)
	MBTU/FT2		MBTU/FT2	MBTU	MBTU	MBTU	MBTU	MBTU	MBTU	MBTU	MBTU	MBTU
JAN	-0.084	-0.001	5.30	1490	19070	0	39970	0	10440	0	22880	0
FEB	-0.129	-0.055	14.45	1410	15410	0	32640	0	7760	0	17410	0
MAR	-0.041	-0.047	35.00	1600	13060	0	28410	0	5830	0	13700	0
APR	0.192	0.042	75.89	1550	7260	0	16730	0	2690	0	7050	0
MAY	0.524	0.191	115.71	1560	3630	760	9160	0	950	1470	3310	2140
JUN	0.803	0.338	142.11	1440	1060	2190	3570	3010	0	3300	0	4540
JUL	1.051	0.482	162.48	1400	0	3750	1330	5610	0	4980	0	6780
AUG	1.117	0.550	159.03	1320	0	3720	1150	5450	0	4700	0	6460
SEP	0.980	0.517	123.12	1240	1480	1630	4340	2320	470	2140	1950	3050
OCT	0.763	0.438	83.73	1280	4190	0	10320	0	1790	690	5180	0
NOV	0.433	0.285	34.44	1290	9780	0	21720	0	4870	0	11750	0
DEC	0.133	0.132	12.87	1410	15390	0	32780	0	8170	0	18480	0
ANNUAL THERMAL LOADS (MBTU)				16990	90330	12050	202120	16390	42970	17280	101710	22970
DESIGN HOURLY THERMAL LOADS (BTU/HR)					56628	14680	110199	22399	35848	17693	69020	28189

CALCULATED ACES DESIGNS

ACES SIZE	SYSTEM DESIGN PARAMETERS		HOUSE 1 ICE MAKER	HOUSE 1 BRINE CHILLER	HOUSE 2 ICE MAKER	HOUSE 2 BRINE CHILLER	HOUSE 3 ICE MAKER	HOUSE 3 BRINE CHILLER	HOUSE 4 ICE MAKER	HOUSE 4 BRINE CHILLER
	VOLUME OF ICE BIN, FT3	V					4046	2080	5630	2903
	AREA OF PANEL, FT2	A					125	137	533	561
FULL	LENGTH OF ICE BIN COIL, FT	L					0	559	0	1036
	USAGE OF ELECTRICITY, KWH/YR	U					7125	7309	13914	13979
	EFFICIENCY (ANNUAL COP)	E					3.18	3.10	2.98	2.97
	VOLUME OF ICE BIN, FT3	V					2576	1316	3943	2016
	AREA OF PANEL, FT2	A					278	295	748	770
PARTIAL	LENGTH OF ICE BIN COIL, FT	L					0	529	0	991
	USAGE OF ELECTRICITY, KWH/YR	U					7869	7878	14596	14863
	EFFICIENCY (ANNUAL COP)	E					2.88	2.87	2.84	2.79
	VOLUME OF ICE BIN, FT3	V	1904	952	3839	1919	1105	552	2257	1128
	AREA OF PANEL, FT2	A	*1153	*1203	*2330	*2433	*666	*695	*1366	*1426
MINIMUM	LENGTH OF ICE BIN COIL, FT	L	0	759	0	1484	0	475	0	922
	USAGE OF ELECTRICITY, KWH/YR	U	12515	12612	24801	25002	8644	8698	15419	15533
	EFFICIENCY (ANNUAL COP)	E	2.79	2.77	2.78	2.76	2.62	2.60	2.69	2.67

*UNGLAZED PANEL EXCEEDS A PRACTICAL SIZE, AN ALTERNATIVE SUPPLEMENTARY HEAT SOURCE SHOULD BE USED IN THIS DESIGN.

RAPID CITY, SOUTH DAKOTA

GEOGRAPHICAL ZONE	= H	LATITUDE (DEG)	= 44.0	GROUND	A0 = 47.61 F	AIR TEMP:	OUTDOOR INDOOR
JANUARY WIND (MPH)	= 10.0	LONGITUDE (DEG)	= 103.1	TEMPERATURE	B0 = 25.39 F	WINTER	-11 F 70 F
COOLING(TOTAL/SENS.)	= 1.00	ELEVATION (FT)	= 3162.	CONSTANTS:	P0 = 0.646 RAD	SUMMER	92 F 78 F

BUILDING DESIGN MONTHLY THERMAL LOADS

MONTH	R-40 INSULATION BIN HEAT LEAK COEFFICIENTS(32F)		UNGLAZED PANEL HEAT	DOMESTIC WATER HEAT	MEDIUM INSULATION				HIGH INSULATION			
					HOUSE 1 1200 FT2		HOUSE 2 2400 FT2		HOUSE 3 1200 FT2		HOUSE 4 2400 FT2	
(M)	TB(M) MBTU/FT2	SD(M) MBTU/FT2	PAN(M) MBTU/FT2	QHW(M) MBTU	QH(M) MBTU	QC(M) MBTU	QH(M) MBTU	QC(M) MBTU	QH(M) MBTU	QC(M) MBTU	QH(M) MBTU	QC(M) MBTU
JAN	0.113	0.094	23.63	1530	14250	0	30600	0	7130	0	16340	0
FEB	0.047	0.034	27.64	1440	12160	0	26290	0	5810	0	13440	0
MAR	0.125	0.043	46.31	1610	11070	0	24400	0	4930	0	11740	0
APR	0.306	0.110	72.31	1520	6830	0	15800	0	2620	0	6910	0
MAY	0.586	0.234	108.78	1480	3430	680	8770	0	860	1220	3200	1790
JUN	0.818	0.355	131.67	1330	1090	1850	3740	2630	0	2690	890	3860
JUL	1.041	0.482	151.34	1270	0	3190	1250	4820	0	4170	0	5850
AUG	1.109	0.544	153.47	1200	0	3440	1140	5220	0	4260	0	6000
SEP	1.001	0.520	121.23	1150	1330	1690	4060	2500	0	2140	1740	3110
OCT	0.834	0.463	94.51	1230	3310	0	8450	0	1280	900	4100	1310
NOV	0.554	0.334	43.80	1270	8220	0	18600	0	4030	0	9960	0
DEC	0.305	0.208	28.10	1430	11890	0	25960	0	5880	0	13870	0
ANNUAL THERMAL LOADS (MBTU)				16460	73580	10850	169060	15170	32540	15380	82190	21920
DESIGN HOURLY THERMAL LOADS (BTU/HR)					50603	13510	98391	21170	32116	15995	61770	26201

CALCULATED ACES DESIGNS

ACES SIZE	SYSTEM DESIGN PARAMETERS		HOUSE 1 ICE MAKER	HOUSE 1 BRINE CHILLER	HOUSE 2 ICE MAKER	HOUSE 2 BRINE CHILLER	HOUSE 3 ICE MAKER	HOUSE 3 BRINE CHILLER	HOUSE 4 ICE MAKER	HOUSE 4 BRINE CHILLER
	VOLUME OF ICE BIN, FT3	V					3638	1843	4921	2539
	AREA OF PANEL, FT2	A					39	46	154	160
FULL	LENGTH OF ICE BIN COIL, FT	L					0	500	0	925
	USAGE OF ELECTRICITY, KWH/YR	U					6142	6172	11966	12013
	EFFICIENCY (ANNUAL COP)	E					3.07	3.06	2.95	2.94
	VOLUME OF ICE BIN, FT3	V					2220	1122	3288	1683
	AREA OF PANEL, FT2	A					78	82	216	223
PARTIAL	LENGTH OF ICE BIN COIL, FT	L					0	471	0	879
	USAGE OF ELECTRICITY, KWH/YR	U					6743	6768	12568	12824
	EFFICIENCY (ANNUAL COP)	E					2.80	2.79	2.81	2.75
	VOLUME OF ICE BIN, FT3	V	1461	730	2974	1487	802	401	1655	827
	AREA OF PANEL, FT2	A	261	270	535	553	141	146	293	303
MINIMUM	LENGTH OF ICE BIN COIL, FT	L	0	665	0	1302	0	414	0	804
	USAGE OF ELECTRICITY, KWH/YR	U	10870	10981	21623	21616	7416	7413	13398	13607
	EFFICIENCY (ANNUAL COP)	E	2.72	2.69	2.72	2.72	2.54	2.54	2.64	2.60

BRISTOL, TENNESSEE

GEOGRAPHICAL ZONE	=	C	LATITUDE (DEG)	=	36.5	GROUND	AO =	56.56 F	AIR TEMP:	OUTDOOR	INDOOR
JANUARY WIND (MPH)	=	7.0	LONGITUDE (DEG)	=	82.4	TEMPERATURE	BO =	20.15 F	WINTER	9 F	70 F
COOLING(TOTAL/SENS.)	=	1.10	ELEVATION (FT)	=	1507.	CONSTANTS:	PO =	0.558 RAD	SUMMER	90 F	78 F

BUILDING DESIGN MONTHLY THERMAL LOADS

MONTH	R-40 INSULATION BIN HEAT LEAK COEFFICIENTS(32F)		UNGLAZED PANEL HEAT	DOMESTIC WATER HEAT	MEDIUM INSULATION				HIGH INSULATION			
					HOUSE 1 1200 FT2		HOUSE 2 2400 FT2		HOUSE 3 1200 FT2		HOUSE 4 2400 FT2	
(M)	TB(M) MBTU/FT2	SD(M)	PAN(M) MBTU/FT2	QHW(M) MBTU	QH(M) MBTU	QC(M) MBTU	QH(M) MBTU	QC(M) MBTU	QH(M) MBTU	QC(M) MBTU	QH(M) MBTU	QC(M) MBTU
JAN	0.527	0.290	31.92	1530	8420	0	19220	0	3630	0	9440	0
FEB	0.448	0.228	40.65	1380	6300	0	14770	0	2450	0	6640	0
MAR	0.572	0.267	60.68	1450	5710	0	13640	0	2120	0	6000	0
APR	0.713	0.319	87.13	1270	2810	690	7420	0	780	1230	2830	1710
MAY	0.955	0.430	100.38	1150	880	1970	3200	2720	0	2900	820	3880
JUN	1.118	0.517	99.20	980	0	2990	890	4220	0	4150	0	5380
JUL	1.296	0.621	98.87	940	0	4030	0	5750	0	5290	0	6930
AUG	1.330	0.661	97.91	940	0	4100	0	5530	0	4990	0	6460
SEP	1.213	0.626	96.42	990	0	2810	920	3910	0	3540	0	4570
OCT	1.082	0.580	76.25	1170	1420	990	4390	1300	450	1390	1950	1890
NOV	0.842	0.467	52.39	1280	4010	0	10020	0	1670	0	4940	0
DEC	0.664	0.375	33.71	1460	7350	0	17030	0	3240	0	8570	0
ANNUAL THERMAL LOADS (MBTU)				14540	36900	17580	91500	23430	14340	23090	41190	30820
DESIGN HOURLY THERMAL LOADS (BTU/HR)					35634	15621	69149	23040	22464	16744	43074	26477

CALCULATED ACES DESIGNS

ACES SIZE	SYSTEM DESIGN PARAMETERS		HOUSE 1 ICE MAKER	HOUSE 1 BRINE CHILLER	HOUSE 2 ICE MAKER	HOUSE 2 BRINE CHILLER	HOUSE 3 ICE MAKER	HOUSE 3 BRINE CHILLER	HOUSE 4 ICE MAKER	HOUSE 4 BRINE CHILLER
	VOLUME OF ICE BIN, FT3	V	4968	2375	6064	3012	2605	1518	5621	3326
	AREA OF PANEL, FT2	A	0	22	110	126	0	0	0	0
FULL	LENGTH OF ICE BIN COIL, FT	L	0	565	0	1042	0	356	0	694
	USAGE OF ELECTRICITY, KWH/YR	U	6639	6658	13368	13425	5728	5538	8439	7964
	EFFICIENCY (ANNUAL COP)	E	3.05	3.04	2.84	2.83	2.68	2.77	3.00	3.18
	VOLUME OF ICE BIN, FT3	V	2945	1418	3993	1987	1542	878	3319	1917
	AREA OF PANEL, FT2	A	50	60	166	182	24	24	52	51
PARTIAL	LENGTH OF ICE BIN COIL, FT	L	0	531	0	991	0	334	0	651
	USAGE OF ELECTRICITY, KWH/YR	U	7386	7412	14036	14062	6436	6299	9896	9665
	EFFICIENCY (ANNUAL COP)	E	2.74	2.73	2.70	2.70	2.38	2.44	2.56	2.62
	VOLUME OF ICE BIN, FT3	V	922	461	1922	961	479	239	1016	508
	AREA OF PANEL, FT2	A	119	127	252	267	62	66	134	143
MINIMUM	LENGTH OF ICE BIN COIL, FT	L	0	462	0	905	0	284	0	552
	USAGE OF ELECTRICITY, KWH/YR	U	8132	8121	15000	14977	6868	6860	10861	10848
	EFFICIENCY (ANNUAL COP)	E	2.49	2.49	2.53	2.53	2.23	2.24	2.33	2.34

KNOXVILLE, TENNESSEE

GEOGRAPHICAL ZONE	= C	LATITUDE (DEG)	= 35.8	GROUND	AO = 58.49 F	AIR TEMP:	OUTDOOR / INDOOR
JANUARY WIND (MPH)	= 9.0	LONGITUDE (DEG)	= 84.0	TEMPERATURE	BO = 20.56 F	WINTER	13 F / 70 F
COOLING(TOTAL/SENS.)	= 1.19	ELEVATION (FT)	= 980.	CONSTANTS:	PO = 0.541 RAD	SUMMER	92 F / 78 F

BUILDING DESIGN MONTHLY THERMAL LOADS

MONTH	R-40 INSULATION BIN HEAT LEAK COEFFICIENTS (32F)		UNGLAZED PANEL HEAT	DOMESTIC WATER HEAT	MEDIUM INSULATION HOUSE 1 1200 FT2		MEDIUM INSULATION HOUSE 2 2400 FT2		HIGH INSULATION HOUSE 3 1200 FT2		HIGH INSULATION HOUSE 4 2400 FT2	
(M)	TB(M)	SD(M)	PAN(M)	QHW(M)	QH(M)	QC(M)	QH(M)	QC(M)	QH(M)	QC(M)	QH(M)	QC(M)
	MBTU/FT2		MBTU/FT2	MBTU	MBTU	MBTU	MBTU	MBTU	MBTU	MBTU	MBTU	MBTU
JAN	0.588	0.320	21.14	1510	8760	0	19920	0	3890	0	10250	0
FEB	0.506	0.257	39.12	1350	5860	0	13990	0	2170	0	6180	0
MAR	0.642	0.300	65.66	1410	5100	0	12670	0	1680	0	5240	0
APR	0.785	0.354	93.68	1230	1740	610	5150	0	360	1270	1650	1590
MAY	1.034	0.469	113.73	1110	540	1720	2220	2110	0	2860	0	3480
JUN	1.198	0.557	117.19	940	0	3260	0	4400	0	4490	0	5810
JUL	1.378	0.662	118.99	900	0	4880	0	6230	0	5810	0	7730
AUG	1.410	0.702	122.22	910	0	5120	0	6720	0	5880	0	7860
SEP	1.285	0.663	105.56	960	0	2990	0	3850	0	3750	0	4600
OCT	1.150	0.615	79.92	1140	920	700	3180	840	230	1110	1380	1340
NOV	0.904	0.499	53.91	1250	3230	0	8590	0	1200	0	4040	0
DEC	0.726	0.406	31.25	1430	6710	0	15800	0	2810	0	7850	0
ANNUAL THERMAL LOADS (MBTU)				14140	32860	19280	81520	24150	12340	25170	36590	32410
DESIGN HOURLY THERMAL LOADS (BTU/HR)					32945	19126	63910	29664	20693	18827	39653	31564

CALCULATED ACES DESIGNS

ACES SIZE	SYSTEM DESIGN PARAMETERS		HOUSE 1 ICE MAKER	HOUSE 1 BRINE CHILLER	HOUSE 2 ICE MAKER	HOUSE 2 BRINE CHILLER	HOUSE 3 ICE MAKER	HOUSE 3 BRINE CHILLER	HOUSE 4 ICE MAKER	HOUSE 4 BRINE CHILLER
	VOLUME OF ICE BIN, FT3	V	4923	2853	7233	3560	2371	1387	5267	3063
	AREA OF PANEL, FT2	A	0	0	76	99	0	0	0	0
FULL	LENGTH OF ICE BIN COIL, FT	L	0	538	0	992	0	328	0	639
	USAGE OF ELECTRICITY, KWH/YR	U	5963	6362	12213	12283	5967	5751	8373	8097
	EFFICIENCY (ANNUAL COP)	E	3.26	3.05	2.87	2.86	2.54	2.63	2.91	3.01
	VOLUME OF ICE BIN, FT3	V	2937	1664	4608	2276	1435	818	3178	1803
	AREA OF PANEL, FT2	A	45	46	153	176	23	24	52	52
PARTIAL	LENGTH OF ICE BIN COIL, FT	L	0	505	0	940	0	308	0	601
	USAGE OF ELECTRICITY, KWH/YR	U	7268	7118	13051	13320	6661	6505	9965	9693
	EFFICIENCY (ANNUAL COP)	E	2.67	2.73	2.69	2.64	2.27	2.33	2.44	2.51
	VOLUME OF ICE BIN, FT3	V	951	475	1983	991	500	250	1088	544
	AREA OF PANEL, FT2	A	146	156	311	329	75	81	167	178
MINIMUM	LENGTH OF ICE BIN COIL, FT	L	0	433	0	848	0	266	0	518
	USAGE OF ELECTRICITY, KWH/YR	U	7983	8101	14069	14079	6934	7027	10689	10696
	EFFICIENCY (ANNUAL COP)	E	2.43	2.40	2.50	2.49	2.18	2.15	2.28	2.28

MEMPHIS, TENNESSEE

GEOGRAPHICAL ZONE = C	LATITUDE (DEG) = 35.0	GROUND	AO = 61.12 F	AIR TEMP:	OUTDOOR	INDOOR
JANUARY WIND (MPH) = 11.0	LONGITUDE (DEG) = 90.0	TEMPERATURE	BO = 21.28 F	WINTER	13 F	70 F
COOLING(TOTAL/SENS.) = 1.20	ELEVATION (FT) = 258.	CONSTANTS:	PO = 0.555 RAD	SUMMER	96 F	78 F

BUILDING DESIGN MONTHLY THERMAL LOADS

MONTH	R-40 INSULATION BIN HEAT LEAK COEFFICIENTS(32F)		UNGLAZED PANEL HEAT	DOMESTIC WATER HEAT	MEDIUM INSULATION HOUSE 1 1200 FT2		MEDIUM INSULATION HOUSE 2 2400 FT2		HIGH INSULATION HOUSE 3 1200 FT2		HIGH INSULATION HOUSE 4 2400 FT2	
(M)	TB(M) MBTU/FT2	SD(M) MBTU/FT2	PAN(M) MBTU/FT2	QHW(M) MBTU	QH(M) MBTU	QC(M) MBTU	QH(M) MBTU	QC(M) MBTU	QH(M) MBTU	QC(M) MBTU	QH(M) MBTU	QC(M) MBTU
JAN	0.674	0.365	41.54	1470	7580	0	17500	0	3460	0	9030	0
FEB	0.580	0.295	54.96	1320	5400	0	12890	0	2180	0	6050	0
MAR	0.724	0.341	84.19	1370	4270	0	10660	0	1560	480	4720	0
APR	0.869	0.395	117.16	1190	1520	1150	4610	1450	0	1870	1590	2460
MAY	1.128	0.514	135.29	1060	0	2970	1400	4160	0	4130	0	5310
JUN	1.296	0.604	137.30	890	0	4550	0	6390	0	5630	0	7720
JUL	1.487	0.715	151.73	840	0	6850	0	9770	0	7160	0	10370
AUG	1.523	0.758	141.88	850	0	6770	0	9690	0	6870	0	9850
SEP	1.395	0.718	105.41	900	0	4360	0	6070	0	4780	0	6470
OCT	1.259	0.671	109.32	1080	690	2040	2470	2850	0	2470	1200	3340
NOV	1.003	0.549	74.88	1210	2910	0	7590	0	1290	540	4030	0
DEC	0.819	0.454	51.77	1390	5510	0	13320	0	2430	0	6800	0
ANNUAL THERMAL LOADS (MBTU)				13570	27880	28690	70440	40380	10920	33930	33420	45520
DESIGN HOURLY THERMAL LOADS (BTU/HR)					31990	22481	62001	37613	20488	20767	39244	35602

CALCULATED ACES DESIGNS

ACES SIZE	SYSTEM DESIGN PARAMETERS		HOUSE 1 ICE MAKER	HOUSE 1 BRINE CHILLER	HOUSE 2 ICE MAKER	HOUSE 2 BRINE CHILLER	HOUSE 3 ICE MAKER	HOUSE 3 BRINE CHILLER	HOUSE 4 ICE MAKER	HOUSE 4 BRINE CHILLER
	VOLUME OF ICE BIN, FT3	V	4096	2407	9178	5382	1954	1147	4754	2784
	AREA OF PANEL, FT2	A	0	0	0	0	0	0	0	0
FULL	LENGTH OF ICE BIN COIL, FT	L	0	514	0	1013	0	318	0	627
	USAGE OF ELECTRICITY, KWH/YR	U	7488	7247	11862	11304	7415	7427	10954	10560
	EFFICIENCY (ANNUAL COP)	E	2.74	2.84	3.07	3.22	2.31	2.30	2.47	2.57
	VOLUME OF ICE BIN, FT3	V	2467	1413	5467	3130	1205	688	2863	1635
	AREA OF PANEL, FT2	A	28	28	58	58	14	14	32	32
PARTIAL	LENGTH OF ICE BIN COIL, FT	L	0	483	0	951	0	299	0	588
	USAGE OF ELECTRICITY, KWH/YR	U	8635	8391	14120	13794	7986	7999	12276	11996
	EFFICIENCY (ANNUAL COP)	E	2.38	2.45	2.58	2.64	2.14	2.14	2.21	2.26
	VOLUME OF ICE BIN, FT3	V	838	419	1757	878	456	228	972	486
	AREA OF PANEL, FT2	A	70	74	149	158	37	40	81	87
MINIMUM	LENGTH OF ICE BIN COIL, FT	L	0	415	0	813	0	260	0	506
	USAGE OF ELECTRICITY, KWH/YR	U	9237	9239	15896	15877	8379	8371	13076	13058
	EFFICIENCY (ANNUAL COP)	E	2.22	2.22	2.29	2.30	2.04	2.04	2.07	2.08

NASHVILLE, TENNESSEE

GEOGRAPHICAL ZONE	= C	LATITUDE (DEG)	= 36.1	GROUND	AO = 58.31 F	AIR TEMP:	OUTDOOR	INDOOR
JANUARY WIND (MPH)	= 9.0	LONGITUDE (DEG)	= 86.7	TEMPERATURE	BO = 21.12 F	WINTER	9 F	70 F
COOLING(TOTAL/SENS.)	= 1.16	ELEVATION (FT)	= 590.	CONSTANTS:	PO = 0.556 RAD	SUMMER	95 F	78 F

BUILDING DESIGN MONTHLY THERMAL LOADS

MONTH (M)	R-40 INSULATION BIN HEAT LEAK COEFFICIENTS (32F) TB(M) MBTU/FT2	SD(M) MBTU/FT2	UNGLAZED PANEL HEAT PAN(M) MBTU/FT2	DOMESTIC WATER HEAT QHW(M) MBTU	MEDIUM INSULATION HOUSE 1 1200 FT2 QH(M) MBTU	QC(M) MBTU	HOUSE 2 2400 FT2 QH(M) MBTU	QC(M) MBTU	HIGH INSULATION HOUSE 3 1200 FT2 QH(M) MBTU	QC(M) MBTU	HOUSE 4 2400 FT2 QH(M) MBTU	QC(M) MBTU
JAN	0.573	0.314	31.77	1520	8650	0	19630	0	3960	0	10090	0
FEB	0.489	0.249	41.66	1360	6620	0	15350	0	2760	0	7290	0
MAR	0.622	0.290	67.44	1420	5320	0	12860	0	2010	0	5710	0
APR	0.769	0.345	98.05	1240	2240	890	6200	0	570	1520	2260	2080
MAY	1.023	0.462	119.05	1110	650	2380	2530	3380	0	3440	0	4460
JUN	1.193	0.553	121.50	940	0	3730	0	5390	0	4930	0	6600
JUL	1.380	0.661	123.06	890	0	5270	0	6940	0	6050	0	8320
AUG	1.415	0.704	122.49	900	0	5200	0	7210	0	5770	0	7870
SEP	1.291	0.666	106.15	950	0	3450	0	4820	0	4060	0	5410
OCT	1.154	0.618	83.31	1140	1270	1360	3960	1860	410	1770	1870	2430
NOV	0.902	0.499	59.88	1260	3620	0	9130	0	1570	410	4670	0
DEC	0.717	0.403	37.97	1440	6790	0	15930	0	3030	0	8140	0
ANNUAL THERMAL LOADS (MBTU)				14170	35160	22280	85590	29600	14310	27950	40030	37170
DESIGN HOURLY THERMAL LOADS (BTU/HR)					35111	19486	68102	30887	22352	19062	42850	31648

CALCULATED ACES DESIGNS

ACES SIZE	SYSTEM DESIGN PARAMETERS		HOUSE 1 ICE MAKER	HOUSE 1 BRINE CHILLER	HOUSE 2 ICE MAKER	HOUSE 2 BRINE CHILLER	HOUSE 3 ICE MAKER	HOUSE 3 BRINE CHILLER	HOUSE 4 ICE MAKER	HOUSE 4 BRINE CHILLER
	VOLUME OF ICE BIN, FT3	V	5124	2992	9081	4338	2484	1454	5599	3251
	AREA OF PANEL, FT2	A	0	0	33	64	0	0	0	0
FULL	LENGTH OF ICE BIN COIL, FT	L	0	572	0	1074	0	353	0	689
	USAGE OF ELECTRICITY, KWH/YR	U	6751	6342	12820	13016	6400	6421	9478	9179
	EFFICIENCY (ANNUAL COP)	E	3.11	3.31	2.96	2.91	2.58	2.57	2.82	2.92
	VOLUME OF ICE BIN, FT3	V	3032	1731	5520	2658	1495	853	3337	1894
	AREA OF PANEL, FT2	A	42	41	109	129	22	23	49	49
PARTIAL	LENGTH OF ICE BIN COIL, FT	L	0	537	0	1013	0	331	0	647
	USAGE OF ELECTRICITY, KWH/YR	U	7911	7746	14223	14247	7177	7182	10865	10900
	EFFICIENCY (ANNUAL COP)	E	2.65	2.71	2.66	2.66	2.30	2.30	2.46	2.46
	VOLUME OF ICE BIN, FT3	V	941	470	1958	979	507	253	1075	537
	AREA OF PANEL, FT2	A	110	116	233	246	58	62	126	135
MINIMUM	LENGTH OF ICE BIN COIL, FT	L	0	457	0	895	0	285	0	553
	USAGE OF ELECTRICITY, KWH/YR	U	8697	8824	15451	15600	7658	7650	11953	11937
	EFFICIENCY (ANNUAL COP)	E	2.41	2.38	2.45	2.43	2.16	2.16	2.24	2.24

EL PASO, TEXAS

GEOGRAPHICAL ZONE = J	LATITUDE (DEG) = 31.8	GROUND	AO = 63.89 F	AIR TEMP:	OUTDOOR	INDOOR
JANUARY WIND (MPH) = 10.0	LONGITUDE (DEG) = 106.4	TEMPERATURE	BO = 19.96 F	WINTER	20 F	70 F
COOLING(TOTAL/SENS.) = 1.00	ELEVATION (FT) = 3947.	CONSTANTS:	PO = 0.479 RAD	SUMMER	98 F	78 F

BUILDING DESIGN MONTHLY THERMAL LOADS

MONTH	R-40 INSULATION BIN HEAT LEAK COEFFICIENTS(32F)		UNGLAZED PANEL HEAT	DOMESTIC WATER HEAT	MEDIUM INSULATION				HIGH INSULATION			
					HOUSE 1 1200 FT2		HOUSE 2 2400 FT2		HOUSE 3 1200 FT2		HOUSE 4 2400 FT2	
(M)	TB(M) MBTU/FT2	SD(M) MBTU/FT2	PAN(M) MBTU/FT2	QHW(M) MBTU	QH(M) MBTU	QC(M) MBTU	QH(M) MBTU	QC(M) MBTU	QH(M) MBTU	QC(M) MBTU	QH(M) MBTU	QC(M) MBTU
JAN	0.792	0.419	78.37	1400	5110	0	12060	0	2350	0	6350	0
FEB	0.702	0.352	86.84	1250	3890	0	9400	0	1590	500	4630	0
MAR	0.868	0.411	125.97	1290	2870	1020	7500	0	970	1420	3350	2140
APR	1.008	0.465	152.40	1120	1060	2290	3440	3450	0	2940	1230	4290
MAY	1.259	0.583	176.77	990	0	3910	0	5970	0	4540	0	6470
JUN	1.405	0.663	184.94	840	0	5840	0	8830	0	5990	0	8720
JUL	1.577	0.765	180.45	800	0	6450	0	9580	0	6310	0	8950
AUG	1.594	0.797	171.81	820	0	6270	0	9240	0	6040	0	8470
SEP	1.454	0.750	156.53	880	0	4740	0	7130	0	4840	0	6830
OCT	1.322	0.702	132.11	1060	0	2720	1730	4180	0	3030	0	4450
NOV	1.075	0.583	96.18	1170	2610	670	6820	0	1180	850	3820	1280
DEC	0.914	0.497	78.96	1340	4580	0	10920	0	2210	0	6050	0
ANNUAL THERMAL LOADS (MBTU)				12960	20120	33910	51870	48380	8300	36460	25430	51600
DESIGN HOURLY THERMAL LOADS (BTU/HR)					27367	21572	52997	36698	17481	18989	33443	31521

CALCULATED ACES DESIGNS

ACES SIZE	SYSTEM DESIGN PARAMETERS		HOUSE 1 ICE MAKER	HOUSE 1 BRINE CHILLER	HOUSE 2 ICE MAKER	HOUSE 2 BRINE CHILLER	HOUSE 3 ICE MAKER	HOUSE 3 BRINE CHILLER	HOUSE 4 ICE MAKER	HOUSE 4 BRINE CHILLER
	VOLUME OF ICE BIN, FT3	V	2764	1628	6681	3934	1221	720	2984	1808
	AREA OF PANEL, FT2	A	0	0	0	0	0	0	0	0
FULL	LENGTH OF ICE BIN COIL, FT	L	0	428	0	851	0	261	0	517
	USAGE OF ELECTRICITY, KWH/YR	U	8022	7819	12250	11892	7713	7721	11405	11430
	EFFICIENCY (ANNUAL COP)	E	2.45	2.51	2.71	2.79	2.19	2.19	2.31	2.31
	VOLUME OF ICE BIN, FT3	V	1683	965	3963	2279	785	447	1851	1083
	AREA OF PANEL, FT2	A	13	14	29	29	0	0	19	18
PARTIAL	LENGTH OF ICE BIN COIL, FT	L	0	402	0	798	0	247	0	486
	USAGE OF ELECTRICITY, KWH/YR	U	8759	8780	14371	14048	8130	8037	12171	12199
	EFFICIENCY (ANNUAL COP)	E	2.24	2.24	2.31	2.36	2.08	2.10	2.17	2.16
	VOLUME OF ICE BIN, FT3	V	603	301	1246	623	348	174	718	359
	AREA OF PANEL, FT2	A	32	34	69	72	18	20	39	42
MINIMUM	LENGTH OF ICE BIN COIL, FT	L	0	347	0	679	0	219	0	423
	USAGE OF ELECTRICITY, KWH/YR	U	9123	9259	15392	15389	8288	8283	12505	12748
	EFFICIENCY (ANNUAL COP)	E	2.15	2.12	2.15	2.16	2.04	2.04	2.11	2.07

FORTH WORTH, TEXAS

GEOGRAPHICAL ZONE = J	LATITUDE (DEG) = 32.8	GROUND	AO = 65.58 F	AIR TEMP:	OUTDOOR	INDOOR
JANUARY WIND (MPH) = 13.0	LONGITUDE (DEG) = 97.4	TEMPERATURE	BO = 20.99 F	WINTER	17 F	70 F
COOLING(TOTAL/SENS.) = 1.14	ELEVATION (FT) = 650.	CONSTANTS:	PO = 0.589 RAD	SUMMER	101 F	78 F

BUILDING DESIGN MONTHLY THERMAL LOADS

MONTH	R-40 INSULATION BIN HEAT LEAK COEFFICIENTS(32F)		UNGLAZED PANEL HEAT	DOMESTIC WATER HEAT	MEDIUM INSULATION HOUSE 1 1200 FT2		MEDIUM INSULATION HOUSE 2 2400 FT2		HIGH INSULATION HOUSE 3 1200 FT2		HIGH INSULATION HOUSE 4 2400 FT2	
(M)	TB(M)	SD(M)	PAN(M)	QHW(M)	QH(M)	QC(M)	QH(M)	QC(M)	QH(M)	QC(M)	QH(M)	QC(M)
	MBTU/FT2		MBTU/FT2	MBTU	MBTU	MBTU	MBTU	MBTU	MBTU	MBTU	MBTU	MBTU
JAN	0.852	0.454	67.86	1380	5380	0	12880	0	2510	0	6820	0
FEB	0.734	0.373	76.33	1250	3910	0	9700	0	1580	410	4690	0
MAR	0.886	0.424	114.23	1300	2940	700	7710	0	1040	1080	3500	1550
APR	1.019	0.472	152.41	1120	870	1680	3000	2310	0	2420	1030	3220
MAY	1.278	0.590	177.14	990	0	3730	0	5260	0	4840	0	6430
JUN	1.441	0.677	196.59	820	0	6650	0	9680	0	6940	0	10060
JUL	1.641	0.791	208.75	770	0	8810	0	13360	0	8260	0	12420
AUG	1.684	0.837	201.78	770	0	8740	0	13320	0	7950	0	11830
SEP	1.559	0.798	183.96	820	0	6240	0	9030	0	6030	0	8530
OCT	1.436	0.758	154.69	990	0	3100	0	4420	0	3390	0	4550
NOV	1.178	0.636	108.27	1120	1750	820	4910	1160	800	1060	2810	1460
DEC	1.000	0.545	80.66	1300	3840	0	9650	0	1790	0	5250	0
ANNUAL THERMAL LOADS (MBTU)				12630	18690	40470	47850	58540	7720	42380	24100	60050
DESIGN HOURLY THERMAL LOADS (BTU/HR)					28070	26114	54300	44982	18484	22453	35357	38266

CALCULATED ACES DESIGNS

ACES SIZE	SYSTEM DESIGN PARAMETERS		HOUSE 1 ICE MAKER	HOUSE 1 BRINE CHILLER	HOUSE 2 ICE MAKER	HOUSE 2 BRINE CHILLER	HOUSE 3 ICE MAKER	HOUSE 3 BRINE CHILLER	HOUSE 4 ICE MAKER	HOUSE 4 BRINE CHILLER
	VOLUME OF ICE BIN, FT3	V	2566	1526	6059	3594	1161	700	2931	1731
	AREA OF PANEL, FT2	A	0	0	0	0	0	0	0	0
FULL	LENGTH OF ICE BIN COIL, FT	L	0	434	0	860	0	274	0	540
	USAGE OF ELECTRICITY, KWH/YR	U	9187	8938	14082	13565	8882	8700	13101	12703
	EFFICIENCY (ANNUAL COP)	E	2.29	2.35	2.48	2.57	2.07	2.11	2.16	2.23
	VOLUME OF ICE BIN, FT3	V	1597	919	3690	2127	761	440	1845	1055
	AREA OF PANEL, FT2	A	14	14	31	31	0	0	19	19
PARTIAL	LENGTH OF ICE BIN COIL, FT	L	0	409	0	808	0	258	0	509
	USAGE OF ELECTRICITY, KWH/YR	U	10019	9784	16055	15690	9215	9219	13932	13961
	EFFICIENCY (ANNUAL COP)	E	2.10	2.15	2.17	2.22	1.99	1.99	2.04	2.03
	VOLUME OF ICE BIN, FT3	V	627	313	1321	660	361	180	759	379
	AREA OF PANEL, FT2	A	34	36	73	77	18	19	41	43
MINIMUM	LENGTH OF ICE BIN COIL, FT	L	0	357	0	699	0	231	0	448
	USAGE OF ELECTRICITY, KWH/YR	U	10353	10356	16889	16897	9357	9359	14382	14388
	EFFICIENCY (ANNUAL COP)	E	2.03	2.03	2.06	2.06	1.96	1.96	1.97	1.97

HOUSTON, TEXAS

GEOGRAPHICAL ZONE	= J	LATITUDE (DEG)	= 29.6	GROUND	AO = 68.51 F	AIR TEMP:	OUTDOOR	INDOOR
JANUARY WIND (MPH)	= 11.0	LONGITUDE (DEG)	= 95.2	TEMPERATURE	BO = 15.68 F	WINTER	27 F	70 F
COOLING(TOTAL/SENS.)	= 1.27	ELEVATION (FT)	= 40.	CONSTANTS:	PO = 0.570 RAD	SUMMER	94 F	78 F

BUILDING DESIGN MONTHLY THERMAL LOADS

MONTH	R-40 INSULATION BIN HEAT LEAK COEFFICIENTS(32F)		UNGLAZED PANEL HEAT	DOMESTIC WATER HEAT	MEDIUM INSULATION				HIGH INSULATION			
					HOUSE 1 1200 FT2		HOUSE 2 2400 FT2		HOUSE 3 1200 FT2		HOUSE 4 2400 FT2	
(M)	TB(M)	SD(M)	PAN(M)	QHW(M)	QH(M)	QC(M)	QH(M)	QC(M)	QH(M)	QC(M)	QH(M)	QC(M)
	MBTU/FT2		MBTU/FT2	MBTU	MBTU	MBTU	MBTU	MBTU	MBTU	MBTU	MBTU	MBTU
JAN	1.059	0.550	84.65	1250	2810	0	7440	0	1180	670	3810	830
FEB	0.933	0.470	87.89	1130	2010	590	5580	0	720	960	2610	1190
MAR	1.091	0.530	123.93	1190	1280	1300	4090	1720	0	1910	1670	2480
APR	1.178	0.560	145.88	1040	0	2540	1240	3610	0	3670	0	4790
MAY	1.386	0.657	166.91	950	0	4910	0	6300	0	5750	0	7900
JUN	1.493	0.714	166.16	820	0	6990	0	10110	0	7160	0	10480
JUL	1.654	0.805	157.01	790	0	8420	0	12680	0	8030	0	12050
AUG	1.683	0.838	160.09	790	0	8550	0	12900	0	7990	0	11970
SEP	1.573	0.801	153.61	830	0	6730	0	9590	0	6550	0	9390
OCT	1.493	0.776	139.00	960	0	4030	0	5700	0	4400	0	5980
NOV	1.286	0.678	108.99	1050	840	1740	2730	2350	0	2130	1520	2860
DEC	1.168	0.617	92.12	1190	1930	640	5470	0	800	920	2890	1210
ANNUAL THERMAL LOADS (MBTU)				11990	8870	46440	26550	64960	2700	50140	12500	71130
DESIGN HOURLY THERMAL LOADS (BTU/HR)					21203	25058	40911	43841	14240	22013	27172	38540

CALCULATED ACES DESIGNS

ACES SIZE	SYSTEM DESIGN PARAMETERS		HOUSE 1 ICE MAKER	HOUSE 1 BRINE CHILLER	HOUSE 2 ICE MAKER	HOUSE 2 BRINE CHILLER	HOUSE 3 ICE MAKER	HOUSE 3 BRINE CHILLER	HOUSE 4 ICE MAKER	HOUSE 4 BRINE CHILLER
FULL	VOLUME OF ICE BIN, FT3	V	988	581	3030	1781				
	AREA OF PANEL, FT2	A	0	0	0	0				
	LENGTH OF ICE BIN COIL, FT	L	0	302	0	616				
	USAGE OF ELECTRICITY, KWH/YR	U	9707	9526	14058	14065				
	EFFICIENCY (ANNUAL COP)	E	2.03	2.07	2.16	2.16				
PARTIAL	VOLUME OF ICE BIN, FT3	V	682	385	1918	1092				
	AREA OF PANEL, FT2	A	0	0	17	17				
	LENGTH OF ICE BIN COIL, FT	L	0	287	0	581				
	USAGE OF ELECTRICITY, KWH/YR	U	9928	9937	14999	15020				
	EFFICIENCY (ANNUAL COP)	E	1.99	1.98	2.02	2.02				
MINIMUM	VOLUME OF ICE BIN, FT3	V	376	188	805	402	225	112	469	234
	AREA OF PANEL, FT2	A	12	13	37	39	0	0	0	0
	LENGTH OF ICE BIN COIL, FT	L	0	262	0	512	0	173	0	334
	USAGE OF ELECTRICITY, KWH/YR	U	10081	10077	15465	15470	10026	10026	14908	14922
	EFFICIENCY (ANNUAL COP)	E	1.96	1.96	1.96	1.96	1.89	1.89	1.88	1.88

SAN ANTONIO, TEXAS

GEOGRAPHICAL ZONE = J	LATITUDE (DEG) = 29.3	GROUND	AO = 70.03 F	AIR TEMP:	OUTDOOR	INDOOR
JANUARY WIND (MPH) = 9.0	LONGITUDE (DEG) = 98.4	TEMPERATURE	BO = 15.72 F	WINTER	25 F	70 F
COOLING(TOTAL/SENS.) = 1.17	ELEVATION (FT) = 598.	CONSTANTS:	PO = 0.555 RAD	SUMMER	97 F	78 F

BUILDING DESIGN MONTHLY THERMAL LOADS

MONTH	R-40 INSULATION BIN HEAT LEAK COEFFICIENTS (32F)		UNGLAZED PANEL HEAT	DOMESTIC WATER HEAT	MEDIUM INSULATION HOUSE 1 1200 FT2		MEDIUM INSULATION HOUSE 2 2400 FT2		HIGH INSULATION HOUSE 3 1200 FT2		HIGH INSULATION HOUSE 4 2400 FT2	
(M)	TB(M) MBTU/FT2	SD(M) MBTU/FT2	PAN(M) MBTU/FT2	QHW(M) MBTU	QH(M) MBTU	QC(M) MBTU	QH(M) MBTU	QC(M) MBTU	QH(M) MBTU	QC(M) MBTU	QH(M) MBTU	QC(M) MBTU
JAN	1.113	0.577	89.82	1230	2040	680	5700	0	800	1020	2860	1320
FEB	0.984	0.495	95.07	1100	1550	870	4510	1150	550	1250	2070	1700
MAR	1.149	0.559	120.66	1160	1000	1590	3310	2230	0	2180	1360	2880
APR	1.236	0.589	138.77	1010	0	2420	1110	3370	0	3280	0	4180
MAY	1.448	0.687	159.26	920	0	4930	0	6770	0	5570	0	7560
JUN	1.552	0.744	172.63	790	0	7560	0	11220	0	7410	0	10920
JUL	1.713	0.836	188.38	760	0	9270	0	14300	0	8470	0	12840
AUG	1.740	0.867	169.12	770	0	9140	0	14180	0	8170	0	12270
SEP	1.625	0.828	151.41	800	0	7030	0	10400	0	6560	0	9380
OCT	1.545	0.803	132.47	940	0	4060	0	5670	0	4270	0	5720
NOV	1.335	0.703	101.56	1030	730	1540	2550	2100	0	1820	1470	2420
DEC	1.219	0.643	89.51	1170	1680	680	4900	0	680	940	2620	1260
ANNUAL THERMAL LOADS (MBTU)				11680	7000	49770	22080	71390	2030	50940	10380	72450
DESIGN HOURLY THERMAL LOADS (BTU/HR)					21577	25660	41592	44907	14859	21899	28350	37589

CALCULATED ACES DESIGNS

ACES SIZE	SYSTEM DESIGN PARAMETERS		HOUSE 1 ICE MAKER	HOUSE 1 BRINE CHILLER	HOUSE 2 ICE MAKER	HOUSE 2 BRINE CHILLER	HOUSE 3 ICE MAKER	HOUSE 3 BRINE CHILLER	HOUSE 4 ICE MAKER	HOUSE 4 BRINE CHILLER
	VOLUME OF ICE BIN, FT3	V	553	328	2090	1219				
	AREA OF PANEL, FT2	A	0	0	0	0				
FULL	LENGTH OF ICE BIN COIL, FT	L	0	285	0	597				
	USAGE OF ELECTRICITY, KWH/YR	U	10078	10005	14988	14731				
	EFFICIENCY (ANNUAL COP)	E	1.99	2.00	2.06	2.09				
	VOLUME OF ICE BIN, FT3	V	428	239	1366	770				
	AREA OF PANEL, FT2	A	0	0	12	13				
PARTIAL	LENGTH OF ICE BIN COIL, FT	L	0	274	0	564				
	USAGE OF ELECTRICITY, KWH/YR	U	10409	10332	15691	15692				
	EFFICIENCY (ANNUAL COP)	E	1.93	1.94	1.96	1.96				
	VOLUME OF ICE BIN, FT3	V	303	151	641	320	188	94	378	189
	AREA OF PANEL, FT2	A	0	0	28	31	0	0	0	0
MINIMUM	LENGTH OF ICE BIN COIL, FT	L	0	258	0	505	0	175	0	338
	USAGE OF ELECTRICITY, KWH/YR	U	10407	10407	15999	15992	9967	10035	14624	14684
	EFFICIENCY (ANNUAL COP)	E	1.93	1.93	1.93	1.93	1.90	1.89	1.89	1.89

SALT LAKE CITY, UTAH

GEOGRAPHICAL ZONE	= L	LATITUDE (DEG)	= 40.8	GROUND	AO = 50.66 F	AIR TEMP:	OUTDOOR INDOOR
JANUARY WIND (MPH)	= 7.0	LONGITUDE (DEG)	= 112.0	TEMPERATURE	BO = 23.52 F	WINTER	3 F 70 F
COOLING(TOTAL/SENS.)	= 1.00	ELEVATION (FT)	= 4220.	CONSTANTS:	PO = 0.609 RAD	SUMMER	93 F 78 F

BUILDING DESIGN MONTHLY THERMAL LOADS

MONTH (M)	R-40 INSULATION BIN HEAT LEAK COEFFICIENTS(32F) TB(M) MBTU/FT2	SD(M) MBTU/FT2	UNGLAZED PANEL HEAT PAN(M) MBTU/FT2	DOMESTIC WATER HEAT QHW(M) MBTU	MEDIUM INSULATION HOUSE 1 1200 FT2 QH(M) MBTU	QC(M) MBTU	HOUSE 2 2400 FT2 QH(M) MBTU	QC(M) MBTU	HIGH INSULATION HOUSE 3 1200 FT2 QH(M) MBTU	QC(M) MBTU	HOUSE 4 2400 FT2 QH(M) MBTU	QC(M) MBTU
JAN	0.253	0.159	16.05	1570	12250	0	26680	0	5750	0	13800	0
FEB	0.185	0.100	27.87	1450	9610	0	21350	0	4030	0	10040	0
MAR	0.282	0.120	47.60	1580	8580	0	19580	0	3360	0	8650	0
APR	0.450	0.183	72.23	1440	5120	0	12340	0	1740	360	5080	0
MAY	0.717	0.304	105.79	1360	2780	910	7390	0	670	1460	2670	2140
JUN	0.924	0.412	123.70	1190	860	2220	3030	3260	0	3020	0	4290
JUL	1.129	0.530	153.45	1120	0	3900	0	5880	0	4830	0	6760
AUG	1.182	0.584	156.48	1080	0	3630	0	5470	0	4420	0	6160
SEP	1.069	0.555	117.40	1070	770	1920	2760	2830	0	2430	1070	3440
OCT	0.913	0.500	86.31	1200	2690	0	7210	0	950	750	3390	1060
NOV	0.647	0.376	38.63	1290	6910	0	16090	0	3090	0	8180	0
DEC	0.424	0.263	20.47	1460	10370	0	23020	0	4790	0	11920	0
ANNUAL THERMAL LOADS (MBTU)				15810	59940	12580	139450	17440	24380	17270	64800	23850
DESIGN HOURLY THERMAL LOADS (BTU/HR)					41556	14675	80784	23458	25585	16366	49132	26905

CALCULATED ACES DESIGNS

ACES SIZE	SYSTEM DESIGN PARAMETERS		HOUSE 1 ICE MAKER	HOUSE 1 BRINE CHILLER	HOUSE 2 ICE MAKER	HOUSE 2 BRINE CHILLER	HOUSE 3 ICE MAKER	HOUSE 3 BRINE CHILLER	HOUSE 4 ICE MAKER	HOUSE 4 BRINE CHILLER
	VOLUME OF ICE BIN, FT3	V	2921	1489	4034	2067	4252	2248	6024	3078
	AREA OF PANEL, FT2	A	172	184	475	494	0	0	76	90
FULL	LENGTH OF ICE BIN COIL, FT	L	0	612	0	1141	0	419	0	773
	USAGE OF ELECTRICITY, KWH/YR	U	9052	9079	18216	18252	5072	5310	10108	10150
	EFFICIENCY (ANNUAL COP)	E	2.86	2.85	2.78	2.77	3.32	3.17	3.03	3.02
	VOLUME OF ICE BIN, FT3	V	2100	1064	3325	1687	2465	1294	3723	1894
	AREA OF PANEL, FT2	A	220	232	537	576	47	51	163	175
PARTIAL	LENGTH OF ICE BIN COIL, FT	L	0	587	0	1113	0	392	0	730
	USAGE OF ELECTRICITY, KWH/YR	U	9400	9412	18527	18505	6053	6074	10968	11003
	EFFICIENCY (ANNUAL COP)	E	2.75	2.75	2.73	2.73	2.78	2.77	2.79	2.78
	VOLUME OF ICE BIN, FT3	V	1279	639	2615	1307	678	339	1423	711
	AREA OF PANEL, FT2	A	301	319	623	659	158	168	339	359
MINIMUM	LENGTH OF ICE BIN COIL, FT	L	0	551	0	1078	0	332	0	646
	USAGE OF ELECTRICITY, KWH/YR	U	9761	9752	18889	18873	6763	6776	12107	12097
	EFFICIENCY (ANNUAL COP)	E	2.65	2.65	2.68	2.68	2.49	2.48	2.53	2.53

BURLINGTON, VERMONT

GEOGRAPHICAL ZONE	= A	LATITUDE (DEG)	= 44.5	GROUND	AO = 44.17 F	AIR TEMP:	OUTDOOR INDOOR
JANUARY WIND (MPH)	= 10.0	LONGITUDE (DEG)	= 73.1	TEMPERATURE	BO = 25.97 F	WINTER	-12 F 70 F
COOLING(TOTAL/SENS.)	= 1.08	ELEVATION (FT)	= 332.	CONSTANTS:	PO = 0.644 RAD	SUMMER	88 F 78 F

BUILDING DESIGN MONTHLY THERMAL LOADS

MONTH	R-40 INSULATION BIN HEAT LEAK COEFFICIENTS(32F)		UNGLAZED PANEL HEAT	DOMESTIC WATER HEAT	MEDIUM INSULATION HOUSE 1 1200 FT2		MEDIUM INSULATION HOUSE 2 2400 FT2		HIGH INSULATION HOUSE 3 1200 FT2		HIGH INSULATION HOUSE 4 2400 FT2	
(M)	TB(M)	SD(M)	PAN(M)	QHW(M)	QH(M)	QC(M)	QH(M)	QC(M)	QH(M)	QC(M)	QH(M)	QC(M)
	MBTU/FT2		MBTU/FT2	MBTU	MBTU	MBTU	MBTU	MBTU	MBTU	MBTU	MBTU	MBTU
JAN	-0.026	0.025	5.01	1510	16500	0	30690	0	9790	0	19680	0
FEB	-0.079	-0.029	7.56	1420	14070	0	26160	0	7980	0	16200	0
MAR	-0.013	-0.027	22.25	1610	11980	0	22490	0	6070	0	12850	0
APR	0.177	0.044	56.85	1550	6490	0	12580	0	2820	0	6400	0
MAY	0.459	0.169	86.60	1560	3270	680	6730	0	1080	1070	3010	1500
JUN	0.701	0.295	109.19	1450	1160	1780	2880	2600	0	2470	970	3300
JUL	0.924	0.423	117.26	1420	0	2750	1380	3960	0	3590	0	4720
AUG	0.993	0.486	112.06	1350	550	2400	1680	3420	0	3070	0	4040
SEP	0.887	0.464	87.67	1270	1590	1080	3800	1480	570	1500	1870	1960
OCT	0.711	0.403	64.81	1320	3860	0	8280	0	1680	0	4450	0
NOV	0.429	0.272	31.27	1310	7670	0	15240	0	3820	0	8770	0
DEC	0.170	0.142	8.03	1430	14260	0	26850	0	8390	0	17180	0
ANNUAL THERMAL LOADS (MBTU)				17200	81400	8690	158760	11460	42200	11700	91380	15520
DESIGN HOURLY THERMAL LOADS (BTU/HR)					49772	13047	86169	20334	33766	15467	60316	23455

CALCULATED ACES DESIGNS

ACES SIZE	SYSTEM DESIGN PARAMETERS		HOUSE 1 ICE MAKER	HOUSE 1 BRINE CHILLER	HOUSE 2 ICE MAKER	HOUSE 2 BRINE CHILLER	HOUSE 3 ICE MAKER	HOUSE 3 BRINE CHILLER	HOUSE 4 ICE MAKER	HOUSE 4 BRINE CHILLER
	VOLUME OF ICE BIN, FT3	V					2466	1275	3148	1635
	AREA OF PANEL, FT2	A					* 467	* 488	* 1169	* 1212
FULL	LENGTH OF ICE BIN COIL, FT	L					0	500	0	858
	USAGE OF ELECTRICITY, KWH/YR	U					6979	6994	12613	12614
	EFFICIENCY (ANNUAL COP)	E					2.98	2.98	2.88	2.88
	VOLUME OF ICE BIN, FT3	V					1756	899	2555	1308
	AREA OF PANEL, FT2	A					* 603	* 633	* 1295	* 1338
PARTIAL	LENGTH OF ICE BIN COIL, FT	L					0	479	0	835
	USAGE OF ELECTRICITY, KWH/YR	U					7346	7343	12914	12911
	EFFICIENCY (ANNUAL COP)	E					2.84	2.84	2.82	2.82
	VOLUME OF ICE BIN, FT3	V	1667	833	2981	1490	1046	523	1961	980
	AREA OF PANEL, FT2	A	* 1242	* 1352	* 2217	* 2424	* 772	* 847	* 1453	* 1595
MINIMUM	LENGTH OF ICE BIN COIL, FT	L	0	667	0	1159	0	448	0	805
	USAGE OF ELECTRICITY, KWH/YR	U	11230	11303	20099	20085	7665	7659	13180	13169
	EFFICIENCY (ANNUAL COP)	E	2.80	2.78	2.73	2.73	2.72	2.72	2.76	2.76

*UNGLAZED PANEL EXCEEDS A PRACTICAL SIZE, AN ALTERNATIVE SUPPLEMENTARY HEAT SOURCE SHOULD BE USED IN THIS DESIGN.

IHC002I STOP 0

NORFOLK, VIRGINIA

GEOGRAPHICAL ZONE	= C	LATITUDE (DEG)	= 36.9	GROUND	AO = 58.64 F	AIR TEMP:	OUTDOOR INDOOR
JANUARY WIND (MPH)	= 11.0	LONGITUDE (DEG)	= 76.2	TEMPERATURE	BO = 20.05 F	WINTER	20 F 70 F
COOLING(TOTAL/SENS.)	= 1.24	ELEVATION (FT)	= 22.	CONSTANTS:	PO = 0.637 RAD	SUMMER	91 F 78 F

BUILDING DESIGN MONTHLY THERMAL LOADS

MONTH	R-40 INSULATION BIN HEAT LEAK COEFFICIENTS (32F)		UNGLAZED PANEL HEAT	DOMESTIC WATER HEAT	MEDIUM INSULATION HOUSE 1 1200 FT2		MEDIUM INSULATION HOUSE 2 2400 FT2		HIGH INSULATION HOUSE 3 1200 FT2		HIGH INSULATION HOUSE 4 2400 FT2	
(M)	TB(M)	SD(M)	PAN(M)	QHW(M)	QH(M)	QC(M)	QH(M)	QC(M)	QH(M)	QC(M)	QH(M)	QC(M)
	MBTU/FT2		MBTU/FT2	MBTU	MBTU	MBTU	MBTU	MBTU	MBTU	MBTU	MBTU	MBTU
JAN	0.620	0.339	45.28	1490	7510	0	17400	0	3300	0	8680	0
FEB	0.518	0.267	54.11	1350	6140	0	14420	0	2550	0	6800	0
MAR	0.633	0.300	75.17	1420	5180	0	12630	0	1960	0	5620	0
APR	0.760	0.345	109.01	1250	2500	680	6750	0	680	1100	2620	1540
MAY	0.998	0.453	128.91	1140	720	1890	2810	2660	0	2860	0	3690
JUN	1.164	0.539	138.83	960	0	3670	0	5240	0	4930	0	6650
JUL	1.356	0.648	143.96	910	0	5220	0	6970	0	6360	0	8870
AUG	1.408	0.696	155.36	900	0	5640	0	7780	0	6310	0	8830
SEP	1.304	0.668	131.14	940	0	3520	0	4660	0	4270	0	5660
OCT	1.188	0.630	108.64	1110	770	1080	2840	1370	0	1560	1230	1980
NOV	0.949	0.519	83.96	1220	2610	0	7030	0	1030	440	3500	0
DEC	0.770	0.429	53.34	1400	6090	0	14500	0	2720	0	7420	0
ANNUAL THERMAL LOADS (MBTU)				14090	31520	21700	78380	28680	12240	27830	35870	37220
DESIGN HOURLY THERMAL LOADS (BTU/HR)					29078	20454	56419	33132	17848	20032	34176	34372

CALCULATED ACES DESIGNS

ACES SIZE	SYSTEM DESIGN PARAMETERS		HOUSE 1 ICE MAKER	HOUSE 1 BRINE CHILLER	HOUSE 2 ICE MAKER	HOUSE 2 BRINE CHILLER	HOUSE 3 ICE MAKER	HOUSE 3 BRINE CHILLER	HOUSE 4 ICE MAKER	HOUSE 4 BRINE CHILLER
	VOLUME OF ICE BIN, FT3	V	4672	2740	8817	4223	2208	1296	5010	2997
	AREA OF PANEL, FT2	A	0	0	19	38	0	0	0	0
FULL	LENGTH OF ICE BIN COIL, FT	L	0	480	0	907	0	285	0	559
	USAGE OF ELECTRICITY, KWH/YR	U	6359	6053	11820	12099	6361	6369	9218	9255
	EFFICIENCY (ANNUAL COP)	E	3.10	3.26	3.00	2.93	2.49	2.49	2.77	2.76
	VOLUME OF ICE BIN, FT3	V	2753	1578	5283	2548	1326	759	2976	1734
	AREA OF PANEL, FT2	A	29	29	74	88	16	16	35	34
PARTIAL	LENGTH OF ICE BIN COIL, FT	L	0	450	0	854	0	268	0	524
	USAGE OF ELECTRICITY, KWH/YR	U	7538	7354	13040	13375	7099	6931	10621	10650
	EFFICIENCY (ANNUAL COP)	E	2.62	2.68	2.72	2.65	2.24	2.29	2.40	2.40
	VOLUME OF ICE BIN, FT3	V	834	417	1749	874	444	222	942	471
	AREA OF PANEL, FT2	A	73	77	156	163	39	41	83	87
MINIMUM	LENGTH OF ICE BIN COIL, FT	L	0	382	0	748	0	230	0	447
	USAGE OF ELECTRICITY, KWH/YR	U	8321	8315	14607	14598	7438	7434	11578	11699
	EFFICIENCY (ANNUAL COP)	E	2.37	2.37	2.43	2.43	2.13	2.13	2.21	2.18

RICHMOND, VIRGINIA

GEOGRAPHICAL ZONE	= C	LATITUDE (DEG)	= 37.4	GROUND	AO = 58.01 F	AIR TEMP:	OUTDOOR	INDOOR
JANUARY WIND (MPH)	= 8.0	LONGITUDE (DEG)	= 77.4	TEMPERATURE	BO = 19.22 F	WINTER	14 F	70 F
COOLING(TOTAL/SENS.)	= 1.18	ELEVATION (FT)	= 122.	CONSTANTS:	PO = 0.561 RAD	SUMMER	92 F	78 F

BUILDING DESIGN MONTHLY THERMAL LOADS

MONTH	R-40 INSULATION BIN HEAT LEAK COEFFICIENTS(32F)		UNGLAZED PANEL HEAT	DOMESTIC WATER HEAT	MEDIUM INSULATION HOUSE 1 1200 FT2		MEDIUM INSULATION HOUSE 2 2400 FT2		HIGH INSULATION HOUSE 3 1200 FT2		HIGH INSULATION HOUSE 4 2400 FT2	
(M)	TB(M)	SD(M)	PAN(M)	QHW(M)	QH(M)	QC(M)	QH(M)	QC(M)	QH(M)	QC(M)	QH(M)	QC(M)
	MBTU/FT2		MBTU/FT2	MBTU	MBTU	MBTU	MBTU	MBTU	MBTU	MBTU	MBTU	MBTU
JAN	0.599	0.325	43.67	1490	6940	0	16240	0	2860	0	7740	0
FEB	0.514	0.261	46.93	1340	5970	0	14070	0	2400	0	6520	0
MAR	0.641	0.302	66.81	1410	5130	0	12420	0	1950	0	5560	0
APR	0.772	0.351	97.38	1240	2490	900	6720	0	660	1390	2570	2000
MAY	1.005	0.458	113.61	1130	840	2090	3140	2960	0	2970	830	3980
JUN	1.158	0.539	120.16	970	0	3670	0	5370	0	4820	0	6570
JUL	1.331	0.640	133.02	930	0	4870	0	6970	0	6080	0	8410
AUG	1.365	0.679	127.05	930	0	4610	0	6050	0	5440	0	7310
SEP	1.250	0.644	110.38	980	0	3040	920	4220	0	3750	0	4980
OCT	1.129	0.601	88.54	1150	1230	1120	3960	1450	360	1510	1780	2020
NOV	0.897	0.492	60.95	1250	3640	0	9240	0	1550	370	4660	0
DEC	0.731	0.406	40.75	1420	6460	0	15230	0	2830	0	7640	0
ANNUAL THERMAL LOADS (MBTU)				14240	32700	20300	81940	27020	12610	26330	37300	35270
DESIGN HOURLY THERMAL LOADS (BTU/HR)					32348	18371	62751	26950	20271	18668	38840	31012

CALCULATED ACES DESIGNS

ACES SIZE	SYSTEM DESIGN PARAMETERS		HOUSE 1 ICE MAKER	HOUSE 1 BRINE CHILLER	HOUSE 2 ICE MAKER	HOUSE 2 BRINE CHILLER	HOUSE 3 ICE MAKER	HOUSE 3 BRINE CHILLER	HOUSE 4 ICE MAKER	HOUSE 4 BRINE CHILLER
	VOLUME OF ICE BIN, FT3	V	4738	2773	7633	3746	2248	1316	5055	2947
	AREA OF PANEL, FT2	A	0	0	42	62	0	0	0	0
FULL	LENGTH OF ICE BIN COIL, FT	L	0	528	0	982	0	320	0	625
	USAGE OF ELECTRICITY, KWH/YR	U	6133	5850	12481	12497	6037	6049	8903	8593
	EFFICIENCY (ANNUAL COP)	E	3.21	3.37	2.89	2.89	2.58	2.58	2.86	2.96
	VOLUME OF ICE BIN, FT3	V	2760	1582	4638	2284	1326	759	2955	1687
	AREA OF PANEL, FT2	A	35	34	100	111	19	19	41	40
PARTIAL	LENGTH OF ICE BIN COIL, FT	L	0	494	0	926	0	300	0	585
	USAGE OF ELECTRICITY, KWH/YR	U	7367	7245	13406	13686	6770	6786	10290	10323
	EFFICIENCY (ANNUAL COP)	E	2.67	2.72	2.69	2.64	2.30	2.30	2.47	2.46
	VOLUME OF ICE BIN, FT3	V	782	391	1642	821	404	202	855	427
	AREA OF PANEL, FT2	A	85	88	181	188	44	46	94	98
MINIMUM	LENGTH OF ICE BIN COIL, FT	L	0	416	0	815	0	254	0	493
	USAGE OF ELECTRICITY, KWH/YR	U	8265	8232	14786	14775	7208	7204	11340	11334
	EFFICIENCY (ANNUAL COP)	E	2.38	2.39	2.44	2.44	2.16	2.16	2.24	2.24

ROANOKE, VIRGINIA

GEOGRAPHICAL ZONE = C	LATITUDE (DEG) = 37.3	GROUND	AO = 56.50 F	AIR TEMP:	OUTDOOR	INDOOR
JANUARY WIND (MPH) = 10.0	LONGITUDE (DEG) = 80.0	TEMPERATURE	BO = 20.19 F	WINTER	12 F	70 F
COOLING(TOTAL/SENS.) = 1.10	ELEVATION (FT) = 1193.	CONSTANTS:	PO = 0.561 RAD	SUMMER	91 F	78 F

BUILDING DESIGN MONTHLY THERMAL LOADS

MONTH	R-40 INSULATION BIN HEAT LEAK COEFFICIENTS(32F)		UNGLAZED PANEL HEAT	DOMESTIC WATER HEAT	MEDIUM INSULATION				HIGH INSULATION			
					HOUSE 1 1200 FT2		HOUSE 2 2400 FT2		HOUSE 3 1200 FT2		HOUSE 4 2400 FT2	
(M)	TB(M)	SD(M)	PAN(M)	QHW(M)	QH(M)	QC(M)	QH(M)	QC(M)	QH(M)	QC(M)	QH(M)	QC(M)
	MBTU/FT2		MBTU/FT2	MBTU	MBTU	MBTU	MBTU	MBTU	MBTU	MBTU	MBTU	MBTU
JAN	0.525	0.289	37.01	1540	8480	0	19340	0	3720	0	9630	0
FEB	0.445	0.227	44.80	1380	6850	0	15870	0	2810	0	7450	0
MAR	0.569	0.265	65.28	1450	6060	0	14390	0	2350	0	6470	0
APR	0.709	0.318	99.67	1270	2770	800	7350	0	760	1300	2810	1870
MAY	0.951	0.428	111.90	1150	1050	1780	3620	2500	0	2570	1010	3560
JUN	1.115	0.516	117.70	980	0	3180	1050	4570	0	4230	0	5590
JUL	1.294	0.619	120.22	940	0	4220	0	6050	0	5430	0	7230
AUG	1.329	0.661	117.21	950	0	4150	0	5550	0	5020	0	6560
SEP	1.212	0.625	100.96	990	0	2650	1170	3690	0	3330	0	4350
OCT	1.081	0.579	85.01	1170	1520	880	4620	1160	460	1210	2120	1660
NOV	0.841	0.466	59.04	1280	4210	0	10480	0	1790	0	5270	0
DEC	0.663	0.374	39.68	1460	7250	0	16870	0	3220	0	8560	0
ANNUAL THERMAL LOADS (MBTU)				14560	38190	17660	94760	23520	15110	23090	43320	30820
DESIGN HOURLY THERMAL LOADS (BTU/HR)					34127	16130	66239	23497	21242	17022	40721	27297

CALCULATED ACES DESIGNS

ACES SIZE	SYSTEM DESIGN PARAMETERS		HOUSE 1 ICE MAKER	HOUSE 1 BRINE CHILLER	HOUSE 2 ICE MAKER	HOUSE 2 BRINE CHILLER	HOUSE 3 ICE MAKER	HOUSE 3 BRINE CHILLER	HOUSE 4 ICE MAKER	HOUSE 4 BRINE CHILLER
	VOLUME OF ICE BIN, FT3	V	4879	2338	5948	2963	2709	1578	5867	3400
	AREA OF PANEL, FT2	A	0	24	108	121	0	0	0	0
FULL	LENGTH OF ICE BIN COIL, FT	L	0	542	0	1002	0	341	0	662
	USAGE OF ELECTRICITY, KWH/YR	U	6799	6861	13695	13749	5764	5568	8342	8116
	EFFICIENCY (ANNUAL COP)	E	3.03	3.01	2.84	2.83	2.68	2.78	3.12	3.20
	VOLUME OF ICE BIN, FT3	V	2903	1401	3940	1964	1598	910	3450	1958
	AREA OF PANEL, FT2	A	49	57	154	168	23	23	49	49
PARTIAL	LENGTH OF ICE BIN COIL, FT	L	0	511	0	953	0	319	0	621
	USAGE OF ELECTRICITY, KWH/YR	U	7391	7514	14351	14563	6315	6327	10070	9840
	EFFICIENCY (ANNUAL COP)	E	2.79	2.75	2.71	2.67	2.45	2.44	2.58	2.64
	VOLUME OF ICE BIN, FT3	V	927	463	1933	966	487	243	1034	517
	AREA OF PANEL, FT2	A	105	109	221	231	54	58	117	125
MINIMUM	LENGTH OF ICE BIN COIL, FT	L	0	445	0	872	0	271	0	527
	USAGE OF ELECTRICITY, KWH/YR	U	8303	8298	15007	15345	6894	6888	11136	11127
	EFFICIENCY (ANNUAL COP)	E	2.48	2.49	2.59	2.54	2.24	2.24	2.33	2.34

MOSES LAKE, WASHINGTON

GEOGRAPHICAL ZONE	= K	LATITUDE (DEG)	= 47.2	GROUND	AO = 50.99 F	AIR TEMP:	OUTDOOR	INDOOR
JANUARY WIND (MPH)	= 5.0	LONGITUDE (DEG)	= 119.3	TEMPERATURE	BO = 22.53 F	WINTER	1 F	70 F
COOLING(TOTAL/SENS.)	= 1.00	ELEVATION (FT)	= 1185.	CONSTANTS:	PO = 0.497 RAD	SUMMER	94 F	78 F

BUILDING DESIGN MONTHLY THERMAL LOADS

MONTH	R-40 INSULATION BIN HEAT LEAK COEFFICIENTS(32F)		UNGLAZED PANEL HEAT	DOMESTIC WATER HEAT	MEDIUM INSULATION				HIGH INSULATION			
					HOUSE 1 1200 FT2		HOUSE 2 2400 FT2		HOUSE 3 1200 FT2		HOUSE 4 2400 FT2	
(M)	TB(M) MBTU/FT2	SD(M) MBTU/FT2	PAN(M) MBTU/FT2	QHW(M) MBTU	QH(M) MBTU	QC(M) MBTU	QH(M) MBTU	QC(M) MBTU	QH(M) MBTU	QC(M) MBTU	QH(M) MBTU	QC(M) MBTU
JAN	0.264	0.158	12.93	1590	12380	0	26930	0	5830	0	13950	0
FEB	0.219	0.112	30.25	1450	8880	0	19940	0	3560	0	9020	0
MAR	0.342	0.146	53.49	1550	7240	0	16940	0	2770	0	7280	0
APR	0.518	0.216	81.20	1400	4340	0	10430	0	1360	530	4350	0
MAY	0.781	0.338	100.47	1310	2370	1260	6470	1720	500	1900	2280	2800
JUN	0.967	0.438	116.83	1140	720	2570	2750	3810	0	3380	0	4900
JUL	1.145	0.545	142.33	1090	0	4150	0	6370	0	4860	0	7090
AUG	1.168	0.583	136.92	1070	0	4220	0	6680	0	4780	0	7150
SEP	1.034	0.542	103.83	1090	940	2010	3310	2980	0	2510	1250	3700
OCT	0.868	0.479	63.29	1230	3300	0	8530	0	1220	360	4090	0
NOV	0.609	0.356	26.79	1320	7560	0	17450	0	3320	0	8810	0
DEC	0.405	0.249	13.18	1500	10810	0	23860	0	5040	0	12440	0
ANNUAL THERMAL LOADS (MBTU)				15740	58540	14210	136610	21560	23600	18320	63470	25640
DESIGN HOURLY THERMAL LOADS (BTU/HR)					42637	17976	82877	29721	26449	19268	50800	32374

CALCULATED ACES DESIGNS

ACES SIZE	SYSTEM DESIGN PARAMETERS		HOUSE 1 ICE MAKER	HOUSE 1 BRINE CHILLER	HOUSE 2 ICE MAKER	HOUSE 2 BRINE CHILLER	HOUSE 3 ICE MAKER	HOUSE 3 BRINE CHILLER	HOUSE 4 ICE MAKER	HOUSE 4 BRINE CHILLER
	VOLUME OF ICE BIN, FT3	V	3373	1717	4812	2470	4159	2401	7120	3614
	AREA OF PANEL, FT2	A	178	187	576	609	0	0	45	64
FULL	LENGTH OF ICE BIN COIL, FT	L	0	637	0	1193	0	434	0	811
	USAGE OF ELECTRICITY, KWH/YR	U	8960	9008	17987	17995	5171	5032	10136	10176
	EFFICIENCY (ANNUAL COP)	E	2.89	2.88	2.83	2.83	3.27	3.36	3.03	3.02
	VOLUME OF ICE BIN, FT3	V	2333	1182	3726	1895	2423	1372	4280	2166
	AREA OF PANEL, FT2	A	277	300	721	771	52	49	162	178
PARTIAL	LENGTH OF ICE BIN COIL, FT	L	0	608	0	1155	0	407	0	764
	USAGE OF ELECTRICITY, KWH/YR	U	9326	9318	18461	18448	6241	6101	11332	11387
	EFFICIENCY (ANNUAL COP)	E	2.78	2.78	2.76	2.76	2.71	2.77	2.71	2.70
	VOLUME OF ICE BIN, FT3	V	1293	646	2640	1320	687	343	1439	719
	AREA OF PANEL, FT2	A	435	460	897	946	230	243	490	518
MINIMUM	LENGTH OF ICE BIN COIL, FT	L	0	564	0	1104	0	343	0	666
	USAGE OF ELECTRICITY, KWH/YR	U	9842	9835	18924	18910	6993	6988	12377	12368
	EFFICIENCY (ANNUAL COP)	E	2.63	2.64	2.69	2.69	2.42	2.42	2.48	2.48

SEATTLE, WASHINGTON

GEOGRAPHICAL ZONE	= N	LATITUDE (DEG)	= 47.4	GROUND	AO = 50.59 F	AIR TEMP:	OUTDOOR	INDOOR
JANUARY WIND (MPH)	= 8.0	LONGITUDE (DEG)	= 122.3	TEMPERATURE	BO = 12.04 F	WINTER	22 F	70 F
COOLING(TOTAL/SENS.)	= 1.00	ELEVATION (FT)	= 47.	CONSTANTS:	PO = 0.626 RAD	SUMMER	82 F	78 F

BUILDING DESIGN MONTHLY THERMAL LOADS

MONTH	R-40 INSULATION BIN HEAT LEAK COEFFICIENTS(32F)		UNGLAZED PANEL HEAT	DOMESTIC WATER HEAT	MEDIUM INSULATION				HIGH INSULATION			
					HOUSE 1 1200 FT2		HOUSE 2 2400 FT2		HOUSE 3 1200 FT2		HOUSE 4 2400 FT2	
(M)	TB(M) MBTU/FT2	SD(M) MBTU/FT2	PAN(M) MBTU/FT2	QHW(M) MBTU	QH(M) MBTU	QC(M) MBTU	QH(M) MBTU	QC(M) MBTU	QH(M) MBTU	QC(M) MBTU	QH(M) MBTU	QC(M) MBTU
JAN	0.468	0.251	23.81	1520	8580	0	19600	0	3470	0	9440	0
FEB	0.399	0.204	34.93	1370	6520	0	15370	0	2230	0	6520	0
MAR	0.478	0.229	52.64	1480	6430	0	15380	0	2410	0	6600	0
APR	0.552	0.255	65.02	1350	4550	0	11090	0	1550	0	4800	0
MAY	0.699	0.322	80.60	1300	3460	0	8710	0	960	710	3580	1040
JUN	0.795	0.372	89.87	1180	2030	910	5780	1160	330	1420	2000	2040
JUL	0.912	0.438	102.01	1170	1200	1840	4050	2640	0	2500	1140	3670
AUG	0.942	0.467	98.43	1170	1100	1530	3880	2080	0	2170	1100	3120
SEP	0.875	0.447	80.96	1170	1800	610	5350	0	340	1050	2000	1450
OCT	0.807	0.426	59.09	1290	3240	0	8710	0	970	0	3660	0
NOV	0.661	0.357	33.88	1340	5830	0	14140	0	2120	0	6440	0
DEC	0.557	0.305	25.29	1470	7810	0	18100	0	3130	0	8780	0
ANNUAL THERMAL LOADS (MBTU)				15810	52550	4890	130160	5880	17510	7850	56060	11320
DESIGN HOURLY THERMAL LOADS (BTU/HR)					30003	6752	58340	8180	17488	11778	33517	18243

CALCULATED ACES DESIGNS

ACES SIZE	SYSTEM DESIGN PARAMETERS		HOUSE 1 ICE MAKER	HOUSE 1 BRINE CHILLER	HOUSE 2 ICE MAKER	HOUSE 2 BRINE CHILLER	HOUSE 3 ICE MAKER	HOUSE 3 BRINE CHILLER	HOUSE 4 ICE MAKER	HOUSE 4 BRINE CHILLER
	VOLUME OF ICE BIN, FT3	V					1455	751	1453	762
	AREA OF PANEL, FT2	A					36	39	157	157
FULL	LENGTH OF ICE BIN COIL, FT	L					0	263	0	466
	USAGE OF ELECTRICITY, KWH/YR	U					4153	4170	8721	8773
	EFFICIENCY (ANNUAL COP)	E					2.90	2.89	2.79	2.78
	VOLUME OF ICE BIN, FT3	V					959	491	1234	635
	AREA OF PANEL, FT2	A					53	55	173	175
PARTIAL	LENGTH OF ICE BIN COIL, FT	L					0	250	0	456
	USAGE OF ELECTRICITY, KWH/YR	U					4349	4363	8777	8821
	EFFICIENCY (ANNUAL COP)	E					2.77	2.76	2.78	2.76
	VOLUME OF ICE BIN, FT3	V	935	467	1956	978	462	231	1015	507
	AREA OF PANEL, FT2	A	174	176	366	391	85	86	191	194
MINIMUM	LENGTH OF ICE BIN COIL, FT	L	0	398	0	782	0	227	0	443
	USAGE OF ELECTRICITY, KWH/YR	U	8086	8124	17375	17359	4600	4617	8831	8951
	EFFICIENCY (ANNUAL COP)	E	2.65	2.64	2.56	2.56	2.62	2.61	2.76	2.72

SPOKANE, WASHINGTON

GEOGRAPHICAL ZONE = K	LATITUDE (DEG) = 47.6	GROUND	AO = 46.79 F	AIR TEMP:	OUTDOOR	INDOOR
JANUARY WIND (MPH) = 8.0	LONGITUDE (DEG) = 117.5	TEMPERATURE	BO = 20.86 F	WINTER	-6 F	70 F
COOLING(TOTAL/SENS.) = 1.00	ELEVATION (FT) = 2366.	CONSTANTS:	PO = 0.557 RAD	SUMMER	88 F	78 F

BUILDING DESIGN MONTHLY THERMAL LOADS

MONTH	R-40 INSULATION BIN HEAT LEAK COEFFICIENTS(32F)		UNGLAZED PANEL HEAT	DOMESTIC WATER HEAT	MEDIUM INSULATION				HIGH INSULATION			
					HOUSE 1 1200 FT2		HOUSE 2 2400 FT2		HOUSE 3 1200 FT2		HOUSE 4 2400 FT2	
(M)	TB(M)	SD(M)	PAN(M)	QHW(M)	QH(M)	QC(M)	QH(M)	QC(M)	QH(M)	QC(M)	QH(M)	QC(M)
	MBTU/FT2		MBTU/FT2	MBTU	MBTU	MBTU	MBTU	MBTU	MBTU	MBTU	MBTU	MBTU
JAN	0.149	0.102	12.60	1560	13570	0	29270	0	6530	0	15340	0
FEB	0.106	0.058	25.75	1450	10460	0	23010	0	4390	0	10870	0
MAR	0.197	0.078	44.08	1600	9340	0	21170	0	3700	0	9260	0
APR	0.356	0.139	68.35	1490	5780	0	13670	0	2120	0	5880	0
MAY	0.593	0.248	86.08	1450	3750	0	9310	0	1050	1030	3650	1530
JUN	0.775	0.344	100.83	1310	1810	1430	5310	2000	0	2090	1650	3080
JUL	0.946	0.445	129.64	1260	670	3020	2560	4630	0	3880	0	5660
AUG	0.981	0.487	123.75	1220	740	2570	2780	3890	0	3310	0	4820
SEP	0.873	0.456	97.56	1190	1780	1140	5190	1590	430	1590	2050	2320
OCT	0.723	0.402	58.11	1290	4520	0	11270	0	1720	0	5210	0
NOV	0.488	0.291	23.30	1330	9100	0	20470	0	4130	0	10550	0
DEC	0.291	0.190	9.97	1480	12060	0	26320	0	5820	0	13970	0
ANNUAL THERMAL LOADS (MBTU)				16630	73580	8160	170330	12110	29890	11900	78430	17410
DESIGN HOURLY THERMAL LOADS (BTU/HR)					47646	11390	92652	17018	29799	15210	57286	24702

CALCULATED ACES DESIGNS

ACES SIZE	SYSTEM DESIGN PARAMETERS		HOUSE 1 ICE MAKER	HOUSE 1 BRINE CHILLER	HOUSE 2 ICE MAKER	HOUSE 2 BRINE CHILLER	HOUSE 3 ICE MAKER	HOUSE 3 BRINE CHILLER	HOUSE 4 ICE MAKER	HOUSE 4 BRINE CHILLER
	VOLUME OF ICE BIN, FT3	V					2667	1380	3666	1909
	AREA OF PANEL, FT2	A					77	86	309	306
FULL	LENGTH OF ICE BIN COIL, FT	L					0	452	0	836
	USAGE OF ELECTRICITY, KWH/YR	U					5701	5722	11357	11428
	EFFICIENCY (ANNUAL COP)	E					3.00	2.99	2.90	2.88
	VOLUME OF ICE BIN, FT3	V					1708	877	2615	1346
	AREA OF PANEL, FT2	A					148	153	460	479
PARTIAL	LENGTH OF ICE BIN COIL, FT	L					0	428	0	801
	USAGE OF ELECTRICITY, KWH/YR	U					6083	6089	11850	11842
	EFFICIENCY (ANNUAL COP)	E					2.81	2.81	2.78	2.78
	VOLUME OF ICE BIN, FT3	V	1401	700	2855	1427	750	375	1565	782
	AREA OF PANEL, FT2	A	569	600	1170	* 1231	306	322	645	680
MINIMUM	LENGTH OF ICE BIN COIL, FT	L	0	628	0	1229	0	385	0	748
	USAGE OF ELECTRICITY, KWH/YR	U	10401	10316	21432	21426	6497	6493	12354	12349
	EFFICIENCY (ANNUAL COP)	E	2.77	2.79	2.72	2.72	2.63	2.64	2.67	2.67

*UNGLAZED PANEL EXCEEDS A PRACTICAL SIZE, AN ALTERNATIVE SUPPLEMENTARY HEAT SOURCE SHOULD BE USED IN THIS DESIGN.

CHARLESTON, WEST VIRGINIA

GEOGRAPHICAL ZONE	= B	LATITUDE (DEG)	= 38.4	GROUND	AO = 55.57 F	AIR TEMP:	OUTDOOR	INDOOR
JANUARY WIND (MPH)	= 8.0	LONGITUDE (DEG)	= 81.6	TEMPERATURE	BO = 20.32 F	WINTER	7 F	70 F
COOLING(TOTAL/SENS.)	= 1.11	ELEVATION (FT)	= 939.	CONSTANTS:	PO = 0.568 RAD	SUMMER	90 F	78 F

BUILDING DESIGN MONTHLY THERMAL LOADS

MONTH	R-40 INSULATION BIN HEAT LEAK COEFFICIENTS (32F)		UNGLAZED PANEL HEAT	DOMESTIC WATER HEAT	MEDIUM INSULATION				HIGH INSULATION			
					HOUSE 1 1200 FT2		HOUSE 2 2400 FT2		HOUSE 3 1200 FT2		HOUSE 4 2400 FT2	
(M)	TB(M) MBTU/FT2	SD(M) MBTU/FT2	PAN(M) MBTU/FT2	QHW(M) MBTU	QH(M) MBTU	QC(M) MBTU	QH(M) MBTU	QC(M) MBTU	QH(M) MBTU	QC(M) MBTU	QH(M) MBTU	QC(M) MBTU
JAN	0.488	0.271	28.00	1550	9230	0	20810	0	4150	0	10510	0
FEB	0.411	0.210	34.73	1400	7300	0	16790	0	2980	0	7830	0
MAR	0.530	0.246	56.11	1470	6400	0	15120	0	2420	0	6670	0
APR	0.672	0.299	87.01	1290	2930	680	7680	0	830	1200	2900	1660
MAY	0.914	0.409	101.99	1170	1270	1660	4110	2290	0	2500	1230	3430
JUN	1.080	0.498	106.49	1000	0	3000	1350	4300	0	4090	0	5440
JUL	1.260	0.602	108.59	960	0	4040	0	5820	0	5280	0	7030
AUG	1.297	0.644	95.78	960	0	3970	0	5380	0	4900	0	6430
SEP	1.182	0.610	93.94	1010	0	2600	1380	3730	0	3340	0	4410
OCT	1.050	0.564	72.28	1180	1740	870	5080	1120	570	1250	2320	1700
NOV	0.810	0.451	51.46	1300	4470	0	11000	0	1880	0	5440	0
DEC	0.629	0.357	33.97	1480	7500	0	17340	0	3290	0	8710	0
ANNUAL THERMAL LOADS (MBTU)				14770	40840	16820	100660	22640	16120	22560	45610	30100
DESIGN HOURLY THERMAL LOADS (BTU/HR)					37066	15601	71944	22622	23381	16960	44846	27123

CALCULATED ACES DESIGNS

ACES SIZE	SYSTEM DESIGN PARAMETERS		HOUSE 1 ICE MAKER	HOUSE 1 BRINE CHILLER	HOUSE 2 ICE MAKER	HOUSE 2 BRINE CHILLER	HOUSE 3 ICE MAKER	HOUSE 3 BRINE CHILLER	HOUSE 4 ICE MAKER	HOUSE 4 BRINE CHILLER
FULL	VOLUME OF ICE BIN, FT3	V	4420	2160	5477	2778	2857	1658	6163	3645
	AREA OF PANEL, FT2	A	30	44	158	171	0	0	0	0
	LENGTH OF ICE BIN COIL, FT	L	0	578	0	1069	0	373	0	727
	USAGE OF ELECTRICITY, KWH/YR	U	7137	7178	14334	14291	5640	5451	8344	8125
	EFFICIENCY (ANNUAL COP)	E	2.97	2.96	2.82	2.83	2.78	2.87	3.18	3.26
PARTIAL	VOLUME OF ICE BIN, FT3	V	2709	1330	3774	1907	1693	961	3640	2102
	AREA OF PANEL, FT2	A	72	81	219	233	29	29	62	59
	LENGTH OF ICE BIN COIL, FT	L	0	546	0	1021	0	350	0	682
	USAGE OF ELECTRICITY, KWH/YR	U	7774	7672	14930	14952	6394	6254	10042	9851
	EFFICIENCY (ANNUAL COP)	E	2.73	2.77	2.71	2.71	2.45	2.50	2.64	2.69
MINIMUM	VOLUME OF ICE BIN, FT3	V	999	499	2071	1035	529	264	1117	558
	AREA OF PANEL, FT2	A	138	145	292	304	71	75	153	160
	LENGTH OF ICE BIN COIL, FT	L	0	483	0	946	0	298	0	579
	USAGE OF ELECTRICITY, KWH/YR	U	8431	8425	15729	15720	6860	6856	11140	11133
	EFFICIENCY (ANNUAL COP)	E	2.52	2.52	2.57	2.57	2.28	2.28	2.38	2.38

ELKINS, WEST VIRGINIA

GEOGRAPHICAL ZONE	= B	LATITUDE (DEG)	= 38.9	GROUND	AO = 49.91 F	AIR TEMP:	OUTDOOR	INDOOR
JANUARY WIND (MPH)	= 7.0	LONGITUDE (DEG)	= 79.8	TEMPERATURE	BO = 19.59 F	WINTER	1 F	70 F
COOLING(TOTAL/SENS.)	= 1.09	ELEVATION (FT)	= 1948.	CONSTANTS:	PO = 0.554 RAD	SUMMER	84 F	78 F

BUILDING DESIGN MONTHLY THERMAL LOADS

MONTH	R-40 INSULATION BIN HEAT LEAK COEFFICIENTS(32F)		UNGLAZED PANEL HEAT	DOMESTIC WATER HEAT	MEDIUM INSULATION				HIGH INSULATION			
					HOUSE 1 1200 FT2		HOUSE 2 2400 FT2		HOUSE 3 1200 FT2		HOUSE 4 2400 FT2	
(M)	TB(M)	SD(M)	PAN(M)	QHW(M)	QH(M)	QC(M)	QH(M)	QC(M)	QH(M)	QC(M)	QH(M)	QC(M)
	MBTU/FT2		MBTU/FT2	MBTU	MBTU	MBTU	MBTU	MBTU	MBTU	MBTU	MBTU	MBTU
JAN	0.290	0.170	20.71	1590	11340	0	24940	0	5200	0	12640	0
FEB	0.235	0.122	28.11	1450	9250	0	20630	0	3930	0	9820	0
MAR	0.335	0.148	43.52	1560	8420	0	19200	0	3330	0	8640	0
APR	0.480	0.204	67.23	1410	4750	0	11530	0	1530	770	4590	1080
MAY	0.708	0.308	82.17	1330	2660	970	7160	0	620	1650	2480	2360
JUN	0.873	0.396	86.47	1170	1100	2020	3780	2810	0	2920	990	3990
JUL	1.038	0.493	95.58	1130	0	2750	1980	3950	0	3840	0	5120
AUG	1.071	0.532	92.67	1110	0	2460	2010	3480	0	3440	0	4520
SEP	0.964	0.501	80.11	1120	1280	1580	4070	2130	0	2200	1530	3000
OCT	0.828	0.452	61.34	1260	3700	0	9320	0	1420	660	4440	910
NOV	0.602	0.346	41.11	1340	6490	0	15160	0	2800	0	7470	0
DEC	0.423	0.253	24.45	1510	10080	0	22450	0	4640	0	11510	0
ANNUAL THERMAL LOADS (MBTU)				15980	59070	9780	142230	12370	23470	15480	64110	20980
DESIGN HOURLY THERMAL LOADS (BTU/HR)					42385	8913	82373	11819	26395	13557	50692	20205

CALCULATED ACES DESIGNS

ACES SIZE	SYSTEM DESIGN PARAMETERS		HOUSE 1 ICE MAKER	HOUSE 1 BRINE CHILLER	HOUSE 2 ICE MAKER	HOUSE 2 BRINE CHILLER	HOUSE 3 ICE MAKER	HOUSE 3 BRINE CHILLER	HOUSE 4 ICE MAKER	HOUSE 4 BRINE CHILLER
FULL	VOLUME OF ICE BIN, FT3	V					3665	1866	4436	2269
	AREA OF PANEL, FT2	A					0	15	109	119
	LENGTH OF ICE BIN COIL, FT	L					0	421	0	767
	USAGE OF ELECTRICITY, KWH/YR	U					5174	5172	9975	10009
	EFFICIENCY (ANNUAL COP)	E					3.11	3.11	2.97	2.96
PARTIAL	VOLUME OF ICE BIN, FT3	V					2147	1090	2876	1464
	AREA OF PANEL, FT2	A					50	55	169	179
	LENGTH OF ICE BIN COIL, FT	L					0	395	0	727
	USAGE OF ELECTRICITY, KWH/YR	U					5612	5754	10579	10581
	EFFICIENCY (ANNUAL COP)	E					2.87	2.80	2.80	2.80
MINIMUM	VOLUME OF ICE BIN, FT3	V	1197	598	2456	1228	629	314	1317	658
	AREA OF PANEL, FT2	A	234	248	486	513	123	130	262	277
	LENGTH OF ICE BIN COIL, FT	L	0	556	0	1088	0	338	0	658
	USAGE OF ELECTRICITY, KWH/YR	U	9178	9167	18574	18553	6390	6383	10825	11385
	EFFICIENCY (ANNUAL COP)	E	2.71	2.71	2.69	2.69	2.52	2.52	2.74	2.60

GREEN BAY, WISCONSIN

GEOGRAPHICAL ZONE	= F	LATITUDE (DEG)	= 44.5	GROUND	AO = 44.24 F	AIR TEMP:	OUTDOOR INDOOR
JANUARY WIND (MPH)	= 11.0	LONGITUDE (DEG)	= 88.1	TEMPERATURE	BO = 26.11 F	WINTER	-13 F 70 F
COOLING(TOTAL/SENS.)	= 1.10	ELEVATION (FT)	= 682.	CONSTANTS:	PO = 0.634 RAD	SUMMER	85 F 78 F

BUILDING DESIGN MONTHLY THERMAL LOADS

MONTH (M)	R-40 INSULATION BIN HEAT LEAK COEFFICIENTS (32F) TB(M) MBTU/FT2	SD(M) MBTU/FT2	UNGLAZED PANEL HEAT PAN(M) MBTU/FT2	DOMESTIC WATER HEAT QHW(M) MBTU	MEDIUM INSULATION HOUSE 1 1200 FT2 QH(M) MBTU	QC(M) MBTU	HOUSE 2 2400 FT2 QH(M) MBTU	QC(M) MBTU	HIGH INSULATION HOUSE 3 1200 FT2 QH(M) MBTU	QC(M) MBTU	HOUSE 4 2400 FT2 QH(M) MBTU	QC(M) MBTU
JAN	-0.028	0.023	4.62	1510	17510	0	36930	0	9350	0	20780	0
FEB	-0.079	-0.030	10.73	1420	14510	0	30870	0	7120	0	16240	0
MAR	-0.010	-0.026	25.42	1610	13280	0	28850	0	5850	0	13970	0
APR	0.183	0.046	62.34	1550	7530	0	17400	0	2720	0	7180	0
MAY	0.467	0.173	92.06	1560	4360	0	10740	0	1230	900	4040	1290
JUN	0.710	0.299	116.99	1450	1620	1580	4930	2040	0	2580	1300	3580
JUL	0.932	0.427	128.28	1410	550	2440	2450	3500	0	3680	0	4850
AUG	0.998	0.490	119.88	1350	0	2590	2150	3680	0	3670	0	4840
SEP	0.889	0.465	99.35	1270	1740	930	5040	1130	470	1480	2080	1970
OCT	0.710	0.403	67.42	1310	4350	0	10840	0	1650	0	5050	0
NOV	0.426	0.271	26.61	1310	9640	0	21540	0	4600	0	11440	0
DEC	0.166	0.140	10.07	1430	14550	0	31160	0	7560	0	17320	0
ANNUAL THERMAL LOADS (MBTU)				17180	89640	7540	202900	10350	40550	12310	99400	16530
DESIGN HOURLY THERMAL LOADS (BTU/HR)					53242	9686	103601	12929	33370	14805	64215	22298

CALCULATED ACES DESIGNS

ACES SIZE	SYSTEM DESIGN PARAMETERS		HOUSE 1 ICE MAKER	HOUSE 1 BRINE CHILLER	HOUSE 2 ICE MAKER	HOUSE 2 BRINE CHILLER	HOUSE 3 ICE MAKER	HOUSE 3 BRINE CHILLER	HOUSE 4 ICE MAKER	HOUSE 4 BRINE CHILLER
	VOLUME OF ICE BIN, FT3	V					2745	1421	3440	1787
	AREA OF PANEL, FT2	A					285	297	940	961
FULL	LENGTH OF ICE BIN COIL, FT	L					0	501	0	917
	USAGE OF ELECTRICITY, KWH/YR	U					6841	6867	13534	13567
	EFFICIENCY (ANNUAL COP)	E					3.00	2.99	2.88	2.87
	VOLUME OF ICE BIN, FT3	V					1875	962	2752	1409
	AREA OF PANEL, FT2	A					420	434	1070	1160
PARTIAL	LENGTH OF ICE BIN COIL, FT	L					0	478	0	890
	USAGE OF ELECTRICITY, KWH/YR	U					7261	7271	13908	13895
	EFFICIENCY (ANNUAL COP)	E					2.83	2.82	2.80	2.81
	VOLUME OF ICE BIN, FT3	V	1761	880	3558	1779	1006	503	2064	1032
	AREA OF PANEL, FT2	A	* 1291	* 1419	* 2618	* 2877	* 733	* 806	* 1514	* 1664
MINIMUM	LENGTH OF ICE BIN COIL, FT	L	0	712	0	1393	0	441	0	856
	USAGE OF ELECTRICITY, KWH/YR	U	12209	12200	25034	25016	7600	7715	14202	14190
	EFFICIENCY (ANNUAL COP)	E	2.74	2.75	2.70	2.70	2.70	2.66	2.75	2.75

*UNGLAZED PANEL EXCEEDS A PRACTICAL SIZE, AN ALTERNATIVE SUPPLEMENTARY HEAT SOURCE SHOULD BE USED IN THIS DESIGN.

MADISON, WISCONSIN

GEOGRAPHICAL ZONE	= F	LATITUDE (DEG)	= 43.1	GROUND	AO = 46.76 F	AIR TEMP:	OUTDOOR / INDOOR
JANUARY WIND (MPH)	= 11.0	LONGITUDE (DEG)	= 89.3	TEMPERATURE	BO = 26.69 F	WINTER	-11 F / 70 F
COOLING(TOTAL/SENS.)	= 1.10	ELEVATION (FT)	= 858.	CONSTANTS:	PO = 0.614 RAD	SUMMER	88 F / 78 F

BUILDING DESIGN MONTHLY THERMAL LOADS

MONTH	R-40 INSULATION BIN HEAT LEAK COEFFICIENTS(32F)		UNGLAZED PANEL HEAT	DOMESTIC WATER HEAT	MEDIUM INSULATION HOUSE 1 1200 FT2		MEDIUM INSULATION HOUSE 2 2400 FT2		HIGH INSULATION HOUSE 3 1200 FT2		HIGH INSULATION HOUSE 4 2400 FT2	
(M)	TB(M)	SD(M)	PAN(M)	QHW(M)	QH(M)	QC(M)	QH(M)	QC(M)	QH(M)	QC(M)	QH(M)	QC(M)
	MBTU/FT2		MBTU/FT2	MBTU	MBTU	MBTU	MBTU	MBTU	MBTU	MBTU	MBTU	MBTU
JAN	0.050	0.062	6.69	1510	16680	0	35300	0	8860	0	19830	0
FEB	-0.005	0.006	13.88	1420	13510	0	28930	0	6540	0	15100	0
MAR	0.080	0.017	30.70	1600	12160	0	26660	0	5300	0	12790	0
APR	0.278	0.092	69.80	1530	6580	0	15420	0	2310	0	6300	0
MAY	0.572	0.224	104.22	1510	3300	670	8550	0	820	1360	2980	1920
JUN	0.816	0.351	125.72	1370	990	1990	3450	2700	0	3100	0	4150
JUL	1.042	0.482	127.90	1320	0	3040	1440	4460	0	4380	0	5720
AUG	1.104	0.543	132.18	1250	0	3050	1330	4370	0	4160	0	5560
SEP	0.984	0.514	102.71	1190	1190	1390	3810	1840	0	1960	1510	2660
OCT	0.800	0.449	74.26	1250	3630	0	9290	0	1390	510	4390	0
NOV	0.506	0.313	33.22	1280	8490	0	19260	0	3970	0	10110	0
DEC	0.244	0.180	10.77	1410	13770	0	29640	0	7150	0	16530	0
ANNUAL THERMAL LOADS (MBTU)				16640	80300	10140	183080	13370	36340	15470	89540	20010
DESIGN HOURLY THERMAL LOADS (BTU/HR)					51277	11704	99739	16813	32261	15668	62059	24588

CALCULATED ACES DESIGNS

ACES SIZE	SYSTEM DESIGN PARAMETERS		HOUSE 1 ICE MAKER	HOUSE 1 BRINE CHILLER	HOUSE 2 ICE MAKER	HOUSE 2 BRINE CHILLER	HOUSE 3 ICE MAKER	HOUSE 3 BRINE CHILLER	HOUSE 4 ICE MAKER	HOUSE 4 BRINE CHILLER
	VOLUME OF ICE BIN, FT3	V					3691	1892	4869	2506
	AREA OF PANEL, FT2	A					110	121	497	531
FULL	LENGTH OF ICE BIN COIL, FT	L					0	504	0	927
	USAGE OF ELECTRICITY, KWH/YR	U					6502	6531	12541	12580
	EFFICIENCY (ANNUAL COP)	E					3.08	3.07	2.95	2.94
	VOLUME OF ICE BIN, FT3	V					2326	1186	3422	1747
	AREA OF PANEL, FT2	A					240	261	688	721
PARTIAL	LENGTH OF ICE BIN COIL, FT	L					0	476	0	887
	USAGE OF ELECTRICITY, KWH/YR	U					7048	7053	13103	13328
	EFFICIENCY (ANNUAL COP)	E					2.85	2.84	2.82	2.77
	VOLUME OF ICE BIN, FT3	V	1684	842	3408	1704	960	480	1976	988
	AREA OF PANEL, FT2	A	* 893	* 985	* 1817	* 2002	507	559	1051	1159
MINIMUM	LENGTH OF ICE BIN COIL, FT	L	0	685	0	1340	0	426	0	826
	USAGE OF ELECTRICITY, KWH/YR	U	11317	11304	22911	22888	7763	7755	13897	13881
	EFFICIENCY (ANNUAL COP)	E	2.77	2.78	2.73	2.73	2.58	2.59	2.66	2.66

*UNGLAZED PANEL EXCEEDS A PRACTICAL SIZE, AN ALTERNATIVE SUPPLEMENTARY HEAT SOURCE SHOULD BE USED IN THIS DESIGN.

CASPER, WYOMING

GEOGRAPHICAL ZONE	= K	LATITUDE (DEG)	= 42.9	GROUND	AO = 46.47 F	AIR TEMP:	OUTDOOR INDOOR
JANUARY WIND (MPH)	= 18.0	LONGITUDE (DEG)	= 106.5	TEMPERATURE	BO = 23.67 F	WINTER	-11 F 70 F
COOLING(TOTAL/SENS.)	= 1.00	ELEVATION (FT)	= 5338.	CONSTANTS:	PO = 0.633 RAD	SUMMER	90 F 78 F

BUILDING DESIGN MONTHLY THERMAL LOADS

MONTH	R-40 INSULATION BIN HEAT LEAK COEFFICIENTS(32F)		UNGLAZED PANEL HEAT	DOMESTIC WATER HEAT	MEDIUM INSULATION				HIGH INSULATION			
					HOUSE 1 1200 FT2		HOUSE 2 2400 FT2		HOUSE 3 1200 FT2		HOUSE 4 2400 FT2	
(M)	TB(M)	SD(M)	PAN(M)	QHW(M)	QH(M)	QC(M)	QH(M)	QC(M)	QH(M)	QC(M)	QH(M)	QC(M)
	MBTU/FT2		MBTU/FT2	MBTU	MBTU	MBTU	MBTU	MBTU	MBTU	MBTU	MBTU	MBTU
JAN	0.100	0.084	29.88	1530	13850	0	29900	0	6890	0	15950	0
FEB	0.042	0.030	29.59	1430	12080	0	26200	0	5770	0	13400	0
MAR	0.117	0.039	47.73	1600	11370	0	25040	0	5230	0	12320	0
APR	0.288	0.103	69.25	1520	7460	0	16990	0	3060	0	7800	0
MAY	0.549	0.220	100.65	1500	4290	0	10480	0	1370	1200	4270	1790
JUN	0.765	0.332	136.33	1360	1650	2110	4920	3110	0	2860	1490	4280
JUL	0.971	0.450	157.84	1310	0	3280	2080	5040	0	4130	0	6030
AUG	1.030	0.507	153.80	1250	0	3080	1850	4720	0	3830	0	5540
SEP	0.927	0.482	116.46	1190	1860	1660	5250	2450	630	2120	2360	3150
OCT	0.769	0.428	90.43	1270	4540	0	10970	0	1990	760	5630	0
NOV	0.507	0.307	43.72	1300	9230	0	20650	0	4690	0	11310	0
DEC	0.276	0.190	27.16	1440	12550	0	27320	0	6320	0	14920	0
ANNUAL THERMAL LOADS (MBTU)				16700	78880	10130	181650	15320	35950	14900	89450	20790
DESIGN HOURLY THERMAL LOADS (BTU/HR)					50812	11852	98809	17932	32161	15179	61859	24637

CALCULATED ACES DESIGNS

ACES SIZE	SYSTEM DESIGN PARAMETERS		HOUSE 1		HOUSE 2		HOUSE 3		HOUSE 4	
			ICE MAKER	BRINE CHILLER	ICE MAKER	BRINE CHILLER	ICE MAKER	BRINE CHILLER	ICE MAKER	BRINE CHILLER
	VOLUME OF ICE BIN, FT3	V					3297	1702	4659	2418
	AREA OF PANEL, FT2	A					50	54	162	163
FULL	LENGTH OF ICE BIN COIL, FT	L					0	496	0	920
	USAGE OF ELECTRICITY, KWH/YR	U					6471	6504	12808	12912
	EFFICIENCY (ANNUAL COP)	E					3.06	3.04	2.90	2.88
	VOLUME OF ICE BIN, FT3	V					2038	1046	3139	1613
	AREA OF PANEL, FT2	A					83	84	214	216
PARTIAL	LENGTH OF ICE BIN COIL, FT	L					0	468	0	876
	USAGE OF ELECTRICITY, KWH/YR	U					7019	7049	13569	13604
	EFFICIENCY (ANNUAL COP)	E					2.82	2.81	2.74	2.73
	VOLUME OF ICE BIN, FT3	V	1424	712	2910	1455	779	389	1619	809
	AREA OF PANEL, FT2	A	245	250	503	513	133	135	279	282
MINIMUM	LENGTH OF ICE BIN COIL, FT	L	0	666	0	1303	0	413	0	803
	USAGE OF ELECTRICITY, KWH/YR	U	11421	11417	23143	23129	7669	7699	14137	14424
	EFFICIENCY (ANNUAL COP)	E	2.71	2.71	2.71	2.71	2.58	2.57	2.63	2.58

CHEYENNE, WYOMING

GEOGRAPHICAL ZONE = K	LATITUDE (DEG) = 41.1	GROUND AO = 45.87 F	AIR TEMP:	OUTDOOR	INDOOR
JANUARY WIND (MPH) = 14.0	LONGITUDE (DEG) = 104.8	TEMPERATURE BO = 21.14 F	WINTER	-9 F	70 F
COOLING (TOTAL/SENS.) = 1.00	ELEVATION (FT) = 6126.	CONSTANTS: PO = 0.664 RAD	SUMMER	86 F	78 F

BUILDING DESIGN MONTHLY THERMAL LOADS

MONTH	R-40 INSULATION BIN HEAT LEAK COEFFICIENTS (32F)		UNGLAZED PANEL HEAT	DOMESTIC WATER HEAT	MEDIUM INSULATION HOUSE 1 1200 FT2		MEDIUM INSULATION HOUSE 2 2400 FT2		HIGH INSULATION HOUSE 3 1200 FT2		HIGH INSULATION HOUSE 4 2400 FT2	
(M)	TB(M)	SD(M)	PAN(M)	QHW(M)	QH(M)	QC(M)	QH(M)	QC(M)	QH(M)	QC(M)	QH(M)	QC(M)
	MBTU/FT2		MBTU/FT2	MBTU	MBTU	MBTU	MBTU	MBTU	MBTU	MBTU	MBTU	MBTU
JAN	0.131	0.097	29.06	1540	13630	0	29430	0	6780	0	15640	0
FEB	0.069	0.044	35.38	1440	11340	0	24740	0	5350	0	12540	0
MAR	0.133	0.051	44.72	1600	11390	0	25080	0	5270	0	12440	0
APR	0.280	0.104	67.52	1520	7700	0	17490	0	3200	0	8100	0
MAY	0.512	0.207	95.41	1500	4580	0	11110	0	1460	970	4560	1430
JUN	0.706	0.307	122.79	1370	2020	1690	5730	2410	0	2400	1820	3580
JUL	0.895	0.415	136.44	1330	870	2530	3280	3770	0	3350	0	4900
AUG	0.956	0.469	135.17	1270	790	2520	3030	3770	0	3240	0	4750
SEP	0.869	0.450	110.36	1210	2230	1420	6100	2020	700	1900	2670	2830
OCT	0.734	0.405	81.01	1290	4640	0	11190	0	1930	730	5570	0
NOV	0.500	0.297	46.13	1320	8540	0	19240	0	4200	0	10280	0
DEC	0.293	0.193	34.50	1450	11250	0	24790	0	5420	0	12970	0
ANNUAL THERMAL LOADS (MBTU)				16840	78980	8160	181210	11970	34310	12590	86590	17490
DESIGN HOURLY THERMAL LOADS (BTU/HR)					49412	9390	96080	13162	31182	13769	59961	21955

CALCULATED ACES DESIGNS

ACES SIZE	SYSTEM DESIGN PARAMETERS		HOUSE 1 ICE MAKER	HOUSE 1 BRINE CHILLER	HOUSE 2 ICE MAKER	HOUSE 2 BRINE CHILLER	HOUSE 3 ICE MAKER	HOUSE 3 BRINE CHILLER	HOUSE 4 ICE MAKER	HOUSE 4 BRINE CHILLER
FULL	VOLUME OF ICE BIN, FT3	V					2572	1334	3526	1841
	AREA OF PANEL, FT2	A					58	60	165	166
	LENGTH OF ICE BIN COIL, FT	L					0	469	0	866
	USAGE OF ELECTRICITY, KWH/YR	U					6254	6285	12444	12496
	EFFICIENCY (ANNUAL COP)	E					2.99	2.97	2.85	2.84
PARTIAL	VOLUME OF ICE BIN, FT3	V					1671	859	2559	1318
	AREA OF PANEL, FT2	A					80	81	188	190
	LENGTH OF ICE BIN COIL, FT	L					0	444	0	831
	USAGE OF ELECTRICITY, KWH/YR	U					6688	6696	12872	13073
	EFFICIENCY (ANNUAL COP)	E					2.79	2.79	2.75	2.71
MINIMUM	VOLUME OF ICE BIN, FT3	V	1404	702	2867	1433	770	385	1591	795
	AREA OF PANEL, FT2	A	200	205	413	419	108	110	224	228
	LENGTH OF ICE BIN COIL, FT	L	0	648	0	1269	0	402	0	780
	USAGE OF ELECTRICITY, KWH/YR	U	11258	11250	23141	23252	7085	7113	13317	13551
	EFFICIENCY (ANNUAL COP)	E	2.71	2.71	2.66	2.65	2.64	2.63	2.66	2.61

IEC002I STOP 0

LANDER, WYOMING

GEOGRAPHICAL ZONE	= K	LATITUDE (DEG)	= 42.8	GROUND	AO = 44.34 F	AIR TEMP:	OUTDOOR INDOOR
JANUARY WIND (MPH)	= 6.0	LONGITUDE (DEG)	= 108.7	TEMPERATURE	BO = 23.74 F	WINTER	-16 F 70 F
COOLING(TOTAL/SENS.)	= 1.00	ELEVATION (FT)	= 5563.	CONSTANTS:	PO = 0.622 RAD	SUMMER	88 F 78 F

BUILDING DESIGN MONTHLY THERMAL LOADS

MONTH	R-40 INSULATION BIN HEAT LEAK COEFFICIENTS(32F)		UNGLAZED PANEL HEAT	DOMESTIC WATER HEAT	MEDIUM INSULATION HOUSE 1 1200 FT2		MEDIUM INSULATION HOUSE 2 2400 FT2		HIGH INSULATION HOUSE 3 1200 FT2		HIGH INSULATION HOUSE 4 2400 FT2	
(M)	TB(M)	SD(M)	PAN(M)	QHW(M)	QH(M)	QC(M)	QH(M)	QC(M)	QH(M)	QC(M)	QH(M)	QC(M)
	MBTU/FT2		MBTU/FT2	MBTU	MBTU	MBTU	MBTU	MBTU	MBTU	MBTU	MBTU	MBTU
JAN	0.017	0.042	19.66	1510	14440	0	30950	0	6860	0	15810	0
FEB	-0.031	-0.007	31.84	1420	11480	0	24990	0	5090	0	11860	0
MAR	0.040	-0.000	44.02	1600	11160	0	24640	0	4850	0	11430	0
APR	0.215	0.066	62.15	1540	7310	0	16720	0	2830	0	7280	0
MAY	0.476	0.183	82.93	1550	4460	0	10880	0	1280	930	4180	1380
JUN	0.694	0.297	104.15	1430	2130	1560	6020	2210	0	2220	1840	3350
JUL	0.895	0.413	128.25	1400	610	2750	2620	4180	0	3680	0	5280
AUG	0.953	0.468	128.33	1340	570	2790	2450	4280	0	3600	0	5230
SEP	0.849	0.444	96.23	1270	1950	1400	5540	2040	540	1880	2220	2800
OCT	0.685	0.387	70.05	1320	4550	0	11020	0	1810	520	5240	0
NOV	0.425	0.266	37.62	1320	9020	0	20170	0	4280	0	10350	0
DEC	0.191	0.147	23.94	1440	12770	0	27680	0	6070	0	14260	0
ANNUAL THERMAL LOADS (MBTU)				17140	80450	8500	183680	12710	33610	12830	84470	18040
DESIGN HOURLY THERMAL LOADS (BTU/HR)					54558	11142	106128	16482	34697	15199	66779	24640

CALCULATED ACES DESIGNS

ACES SIZE	SYSTEM DESIGN PARAMETERS		HOUSE 1 ICE MAKER	HOUSE 1 BRINE CHILLER	HOUSE 2 ICE MAKER	HOUSE 2 BRINE CHILLER	HOUSE 3 ICE MAKER	HOUSE 3 BRINE CHILLER	HOUSE 4 ICE MAKER	HOUSE 4 BRINE CHILLER
	VOLUME OF ICE BIN, FT3	V					2689	1399	3721	1951
	AREA OF PANEL, FT2	A					67	70	194	198
FULL	LENGTH OF ICE BIN COIL, FT	L					0	518	0	959
	USAGE OF ELECTRICITY, KWH/YR	U					6202	6232	12177	12241
	EFFICIENCY (ANNUAL COP)	E					3.00	2.99	2.88	2.86
	VOLUME OF ICE BIN, FT3	V					1732	893	2663	1376
	AREA OF PANEL, FT2	A					96	99	241	247
PARTIAL	LENGTH OF ICE BIN COIL, FT	L					0	490	0	918
	USAGE OF ELECTRICITY, KWH/YR	U					6659	6682	12620	12640
	EFFICIENCY (ANNUAL COP)	E					2.80	2.79	2.78	2.77
	VOLUME OF ICE BIN, FT3	V	1477	738	3006	1503	776	388	1604	802
	AREA OF PANEL, FT2	A	298	309	610	633	157	163	328	340
MINIMUM	LENGTH OF ICE BIN COIL, FT	L	0	711	0	1392	0	441	0	858
	USAGE OF ELECTRICITY, KWH/YR	U	11320	11336	23179	23211	6862	7069	13085	13100
	EFFICIENCY (ANNUAL COP)	E	2.75	2.74	2.70	2.70	2.71	2.64	2.68	2.68

SHERIDAN, WYOMING

GEOGRAPHICAL ZONE	= K	LATITUDE (DEG)	= 44.8	GROUND	AO = 46.02 F	AIR TEMP:	OUTDOOR INDOOR
JANUARY WIND (MPH)	= 8.0	LONGITUDE (DEG)	= 107.0	TEMPERATURE	BO = 24.10 F	WINTER	-14 F 70 F
COOLING(TOTAL/SENS.)	= 1.00	ELEVATION (FT)	= 3964.	CONSTANTS:	PO = 0.609 RAD	SUMMER	92 F 78 F

BUILDING DESIGN MONTHLY THERMAL LOADS

MONTH	R-40 INSULATION BIN HEAT LEAK COEFFICIENTS(32F)		UNGLAZED PANEL HEAT	DOMESTIC WATER HEAT	MEDIUM INSULATION HOUSE 1 1200 FT2		MEDIUM INSULATION HOUSE 2 2400 FT2		HIGH INSULATION HOUSE 3 1200 FT2		HIGH INSULATION HOUSE 4 2400 FT2	
(M)	TB(M)	SD(M)	PAN(M)	QHW(M)	QH(M)	QC(M)	QH(M)	QC(M)	QH(M)	QC(M)	QH(M)	QC(M)
	MBTU/FT2		MBTU/FT2	MBTU	MBTU	MBTU	MBTU	MBTU	MBTU	MBTU	MBTU	MBTU
JAN	0.069	0.068	23.13	1530	14180	0	30460	0	6870	0	15840	0
FEB	0.019	0.017	28.50	1430	11750	0	25500	0	5360	0	12500	0
MAR	0.099	0.029	45.02	1600	10700	0	23700	0	4620	0	11060	0
APR	0.278	0.096	65.78	1530	7110	0	16310	0	2770	0	7170	0
MAY	0.545	0.216	91.53	1510	4010	0	9900	0	1140	1270	3830	1910
JUN	0.763	0.331	114.74	1370	1690	1900	5040	2770	0	2640	1490	3930
JUL	0.967	0.449	133.46	1330	0	3290	2170	5060	0	4150	0	6050
AUG	1.022	0.504	130.11	1270	0	3110	2060	4760	0	3860	0	5590
SEP	0.912	0.477	99.42	1210	1980	1630	5510	2410	620	2070	2410	3100
OCT	0.746	0.418	55.64	1280	4770	0	11630	0	1930	560	5630	0
NOV	0.479	0.294	27.19	1300	9410	0	21000	0	4560	0	11150	0
DEC	0.244	0.174	4.92	1440	13540	0	29170	0	7000	0	16220	0
ANNUAL THERMAL LOADS (MBTU)				16800	79140	9930	182450	15000	34870	14550	87300	20580
DESIGN HOURLY THERMAL LOADS (BTU/HR)					52846	12484	102774	19139	33631	15684	64708	25600

CALCULATED ACES DESIGNS

ACES SIZE	SYSTEM DESIGN PARAMETERS		HOUSE 1 ICE MAKER	HOUSE 1 BRINE CHILLER	HOUSE 2 ICE MAKER	HOUSE 2 BRINE CHILLER	HOUSE 3 ICE MAKER	HOUSE 3 BRINE CHILLER	HOUSE 4 ICE MAKER	HOUSE 4 BRINE CHILLER
FULL	VOLUME OF ICE BIN, FT3	V					3192	1649	4523	2350
	AREA OF PANEL, FT2	A					70	76	249	252
	LENGTH OF ICE BIN COIL, FT	L					0	514	0	954
	USAGE OF ELECTRICITY, KWH/YR	U					6379	6409	12493	12590
	EFFICIENCY (ANNUAL COP)	E					3.04	3.03	2.92	2.90
PARTIAL	VOLUME OF ICE BIN, FT3	V					1985	1019	3066	1577
	AREA OF PANEL, FT2	A					130	133	365	380
	LENGTH OF ICE BIN COIL, FT	L					0	485	0	909
	USAGE OF ELECTRICITY, KWH/YR	U					6857	6864	13180	13172
	EFFICIENCY (ANNUAL COP)	E					2.83	2.83	2.77	2.77
MINIMUM	VOLUME OF ICE BIN, FT3	V	1455	727	2962	1481	778	389	1608	804
	AREA OF PANEL, FT2	A	* 861	* 1021	* 1781	* 2104	527	* 613	1131	* 1308
	LENGTH OF ICE BIN COIL, FT	L	0	691	0	1351	0	430	0	835
	USAGE OF ELECTRICITY, KWH/YR	U	11205	11187	22724	22690	7199	7189	13583	13789
	EFFICIENCY (ANNUAL COP)	E	2.77	2.77	2.76	2.77	2.70	2.70	2.69	2.65

*UNGLAZED PANEL EXCEEDS A PRACTICAL SIZE, AN ALTERNATIVE SUPPLEMENTARY HEAT SOURCE SHOULD BE USED IN THIS DESIGN.

IHC002I STOP 0

Appendix C

ACES DESIGN WORK FORMS

ORNL–DWG 79-21240

RAPID ACES DESIGN

Work Form 1

DATE: _____ JOB: _____

Geographical Zone: _____
Reference City: _____
Insulation Level: _____

Proposed ACES House: (X): _____ ft^2
Reference House No. ( ): _____ ft^2
Reference House No. ( ): _____ ft^2

Interpolation Constants:
C( ) = _____
C( ) = _____

ACES COST AND DESIGN PARAMETERS	PROPOSED ACES HOUSE			REFERENCE HOUSE ( )			REFERENCE HOUSE ( )		
	FULL	PARTIAL	MINIMUM	FULL	PARTIAL	MINIMUM	FULL	PARTIAL	MINIMUM
T, total installed cost, $									
O, operating costs present value, $									
P, present value life-cycle cost, $									
V, wetted volume of ice bin, ft^3									
A, area of solar panel, ft^2									
L, length of ice bin coil, ft									
U, usage of electricity, kWhr/yr									
E, efficiency (annual COP)									

ORNL–DWG 79-16638R

DESIGN DAY HEAT LOAD

Work Form 2

DATE: _____ JOB: _____

Indoor Air Temperature: TSW = _____ °F
Outdoor Air Temperature: TDD = _____ °F
Ground Temperature: TG = _____ °F

House Volume: VOL = _____ FT^3
Air Change Rate*: ACH = _____ AC/HR
Wind Speed: V = _____ MPH

EXPOSURE	EXTERIOR BUILDING SURFACES	NORTH (or horizontal)			SOUTH (or horizontal)			EAST (or horizontal)			WEST (or horizontal)			HEAT LOSS (Btu/hr)
		A	U	ΔT	A	U	ΔT	A	U	ΔT	A	U	ΔT	
ABOVE GRADE	WALLS													
	DOORS													
	GLASS AREAS													
	CEILING													
	FLOOR													
BELOW GRADE	FLOOR													
	WALLS													
CHECK OF TOTAL VERTICAL AREAS												CONDUCTION HEAT RATE =		
INFILTRATION HEAT LOSS RATE: [0.018 X VOL X ACH X (TSW – TDD)] =														
TOTAL DESIGN DAY HEAT LOSS RATE: (CONDUCTION + INFILTRATION) =														

$$^{*}ACH = N\left[\frac{0.15 + 0.013V + 0.005\Delta T}{0.695}\right]$$, where $\Delta T = TSW - TDD$, V = average wind speed (mph), and $N \geq 1$.

ORNL–DWG 79-16639 R

ACES DESIGN MONTHLY LOADS

Work Form 3

DATE: _____ JOB: _____

MONTH	A	B	C	D	E	F	G
	CALCULATED LOADS			SELECTED ACES DESIGN LOADS			
	SPACE HEAT q_H MBtu	WATER HEAT q_{HW} MBtu	SPACE COOL q_C MBtu	SPACE HEAT q_H MBtu	WATER HEAT q_{HW} MBtu	TOTAL HEAT q_{HT} MBtu	SPACE COOL q_C MBtu
Jan							
Feb							
Mar							
Apr							
May							
Jun							
Jul							
Aug							
Sep							
Oct							
Nov							
Dec							
TOTAL							

ORNL–DWG 79-21241

ACES MODAL OPERATING PARAMETERS

Work Form 4

DATE: _____ JOB: _____

ANNUAL CYCLE ENERGY SYSTEM	ICE PHASE		SUPPLEMENTAL PHASE		
	HEATING	COOLING	HEATING	COOLING	BIN REJECT
POWER EQUIPMENT:					
Heat pump compressor, E_C kW		X		X	
Indoor fan coil, E_F kW			X		X
Cold brine pump, E_{CB} kW					
Hot brine pump, E_{HB} kW		X	X	X	
Hot water pump, E_{HW} kW	X	X		X	X
Outdoor fan coil, E_{OF} kW	X	X	X	X	
Total Electrical Draw, E_T kW					
COMPONENT RATINGS:					
Evaporator-side compressor COP		X		X	
Indoor fan coil, H Btu/hr	X		X		X
Desuperheater, H_{DH} Btu/hr	X	X		X	X
Condenser, H_{CD} Btu/hr	X	X		X	X
MODAL OPERATING PARAMETERS:	$COP_I(H)$	$COP_I(C)$	$COP_S(H)$	COP(BD)	COP(BR)
System performance, $COP_P(M)$*					
Bin transfer coefficients, $\alpha_P(M)$*					1.00
	$\alpha_I(H)$	$\alpha_I(C)$	$\alpha_S(H)$	$\alpha_S(C)$	

(*P denotes phase of the annual cycle, M denotes operating mode.)

ORNL–DWG 79-16645

SOLAR PANEL SIZE

Work Form 5

DATE: _____ JOB: _____

Part 1

MONTH	A ICE BIN HEAT FLOWS FROM House Loads q_{HSE} MBtu	B Ground Leakage q_L MBtu	C Solar Panel q_{COL} MBtu	D NET BIN LOAD q_{NET} MBtu	E BIN HEAT DEPOSIT q_{DEP} MBtu	F SOLAR PANEL RATING PAN MBtu/ft^2	G FULL MELT PANEL AREA A_{FM} ft^2
Jan							
Feb							
Mar							
Apr							
May							
Jun							
Jul							
Aug							
Sep							
Oct							
Nov							
Dec							

$\alpha_1(C)$ = _____ $\alpha_1(H)$ = _____ , TCAP = _____ MBtu, A_T = _____ ft^2, A_{SD} = _____ ft^2.

Part 2

IT. NR.	MONTHS INCLUDED IN THE SUMMATION	α = (β – TCAP)	β = $-\Sigma\, q_{DEP}$	γ = Σ PAN	A_{PAN} α/γ
1					
2					
3					
4					
5					

ORNL-DWG 79-16646

ACES POWER CONSUMPTION

Work Form 6

DATE: _____ JOB: _____

Part 1

MONTH	A HEATING LOAD q_{HT} MBtu	B COOLING LOAD q_C MBtu	C BIN LOAD q_{NET} MBtu	D BIN HEAT LEVEL q_{TOT} MBtu	E SUPPLEMENTAL PHASE HEATING $q_{HT}(SP)$ MBtu	F SUPPLEMENTAL PHASE COOLING $q_C(SP)$ MBtu	G SUPPLEMENTAL PHASE LEAKAGE $q_L(SP)$ MBtu
Jan							
Feb							
Mar							
Apr							
May							
Jun							
Jul							
Aug							
Sept							
Oct							
Nov							
Dec							
TOTAL			TCAP =				

$$K_O = \alpha_S(C) + \frac{O_L(SP)}{O_C(SP)} - \alpha_S(H) \cdot \frac{O_{HT}(SP)}{O_C(SP)} = (\quad) + \frac{(\quad)}{(\quad)} - (\quad) \cdot \frac{(\quad)}{(\quad)} = _____.$$

$$COP_S(C) = \left(\frac{1}{COP(BD)} + \frac{K_O}{COP(BR)}\right)^{-1} = \left(\frac{1}{(\quad)} + \frac{K_O}{(\quad)}\right)^{-1} = _____.$$

Part 2

SYSTEM PERFORMANCE	ICE PHASE HEATING	ICE PHASE COOLING	SUPPLEMENTAL PHASE HEATING	SUPPLEMENTAL PHASE COOLING	ANNUAL CYCLE
Delivered loads, MBtu					
Power consumption, MBtu					
COP					

ORNL-DWG 79-16650A

ACES LIFE CYCLE COST

Work Form 7

DATE: _____ JOB: _____

COMPONENT	ITEM	ITEM QUANTITY	UNIT MATERIAL COST	TOTAL MATERIAL COST	ESTIMATE INSTALL COST	ITEM INSTALLED COST
Mechanical Package	Heat Pump	tons				
			SUBTOTAL			
Ice Storage Bin	Wall construction	ft^2	$\$/ft^2$			
	Floor construction	ft^2	$\$/ft^2$			
H = ft	Top construction	ft^2	$\$/ft^2$			
W = ft	Footing construction	ft	\$/ft			
L = ft	Wall insulation, in.	bd-ft	\$/bd-ft			
V_{TOT} = ft^3	Floor insulation, in.	bd-ft	\$/bd-ft			
V_{WET} = ft^3	Top insulation, in.	bd-ft	\$/bd-ft			
	Water-proof liner	ft^2	$\$/ft^2$			
	Other, excavation					
			SUBTOTAL			
Ice Bin Heat Exchanger	Tubing	ft	\$/ft			
	Other					
			SUBTOTAL			
Solar Collector	Panel surface	ft^2	$\$/ft^2$			
	Other					
			SUBTOTAL			
Other Components	Hot water tank	gal.				
	Control system					
	Auxiliary pumps	hp				
	Back-up heating system	kW				
	Duct system					
			SUBTOTAL			
Total Installed Cost						
Operating Costs Present Values		Fuel				
		Maintenance				
Present Value Life Cycle Cost						

INTERNAL DISTRIBUTION

1. L. A. Abbatiello
2. H. G. Arnold
3. S. I. Auerbach
4. M. Baker
5. M. L. Ballou
6. P. R. Barnes
7. V. D. Baxter
8. J. L. Blue
9. J. W. Boyle
10. R. S. Carlsmith
11. S. A. Carnes
12. J. E. Christian
13. W. L. Cooper, Jr.
14. F. A. Creswick
15. G. A. Cristy
16. G. A. Dailey
17. R. M. Davis
18. S. G. DeCicco
19. R. C. DeVault
20. J. E. Dobson
21. R. E. Ellison
22. P. D. Fairchild
23. W. Fulkerson
24. C. A. Gallagher
25. K. S. Gant
26. J. Googin
27. V. O. Haynes
28. M. A. Hill
29. N. E. Hinkle
30. E. A. Hirst
31. R. B. Honea
32. C. C. Hopkins
33. G. E. Kamp
34. S. I. Kaplan
35. C. R. Kerley
36. J. O. Kolb
37. M. E. LaVerne
38. D. W. Lee
39. W. P. Levins
40. H. M. Long
41-46. P. M. Love
47. J. W. Michel
48-67. R. E. Minturn
68. J. C. Moyers
69. E. A. Nephew
70. H. Perez-Blanco
71. A. M. Perry
72. C. H. Petrich
73. H. Postma
74. M. W. Rosenthal
75. T. H. Row
76. G. Samuels
77. M. Schweitzer
78. H. T. Shapira
79. A. D. Shepherd
80. J. S. Tatum
81. R. C. Tepel
82. D. B. Trauger
83. E. K. Triegel
84. D. J. Walukas
85. A. Witten
86. Biology Division Library
87-88. Central Research Library
89. Document Reference Section
90-91. Energy Information Library
92. Laboratory Records — RC
93-95. Laboratory Records Department
96. ORNL Patent Office

EXTERNAL DISTRIBUTION

97. Mr. Roy W. Abbott, Manager, Advanced Technology, General Electric Company, Appliance Park, Building 6-208, Louisville, KY 40225
98. Mr. Ben Adams, Adams Craft Herz Walker, 106 Administration Road, Oak Ridge, TN 37830
99. Mr. Kent Anderson, Trane Company, 2020 14th Street, Arlington, VA 22201

100. Mr. Bruce Appelbaum, Gordian Associates, Inc., 711 Third Avenue, New York, NY 10017
101. Mr. Hamp Barnett, Power Research Staff, Tennessee Valley Authority, 350 Commerce Union Bank Building, Chattanooga, TN 37401
102. Mr. Larry B. Barrett, Potomac Electric Power Company, Manager, Energy Management Services Division, 1900 Pennsylvania Avenue, NW, Washington, DC 20068
103. Mr. Gene Brewer, NIBS, Suite 700, 1015 15th Street NW, Washington, DC 20005
104. Mr. William B. Briggs, McDonnell-Douglas Company, Department E080, Post Office Box 516, St. Louis, MO 63166
105. Mr. Thomas Cahill, Energy Systems Division, Carrier Corporation, Carrier Tower, Post Office Box 4800, Syracuse, NY 13221
106. Mr. Joe Canal, General Electric Company, Troup Highway, Tyler, TX 75711
107. Dr. W. James Cole, Program Director, New York State Energy Research and Development Authority, Agency Building No. 2, Empire State Plaza, Albany, NY 12223
108. Dr. David Colvin, Triangle Research and Development Corporation, Post Office Box 12696, Research Triangle Park, NC 27709
109. Professor George E. Courville, Department of Physics, Fairleigh-Dickinson University, Teaneck, NJ 07666
110. Mr. John J. Cuttica, Chief, Technology and Consumer Products Branch, Mail Stop 2221C, Department of Energy, 20 Massachusetts Avenue NW, Washington, DC 20545
111. Mr. H. E. Davis, Concentration Specialists, Inc., 26 Dundee Park, Andover, MA 01810
112. Mr. Gordon D. Duffy, Executive Editor, Air Conditioning News, 700 East Maple, Birmingham, MI 48011
113. Mr. William A. Elder, President, Automated Air Systems, Inc., 1723 Rhoadmiller Street, Richmond, VA 23220
114. Mr. Douglas Funkhouser, Urban Systems Research and Engineering, Inc., 36 Boylston Street, Cambridge, MA 02138
115. Mr. Ted Gillis, Lennox Industries, Promenade Towers, Post Office Box 400450, Dallas, TX 75240
116. Mr. George E. Gilmore, Consolidated Edison Company of New York, Inc., Four Irving Place, New York, NY 10003
117. Dr. L. R. Glicksman, Department of Mechanical Engineering, Massachusetts Institute of Technology, Cambridge, MA 02139
118. Mr. Dieter Grether, Vice President Engineering, Friedrich Air Conditioning and Refrigeration, Post Office Box 1540, San Antonio, TX 78295
119. Mr. Gerald C. Groff, Research Division, Carrier Corporation, Syracuse, NY 13201
120. Mr. Donald G. Hoffard, Post Office Box 3221, Portland, OR 97208
121. Mr. F. Honnold, Consumer Products Division, Carrier Corporation, Syracuse, NY 13201
122. Mr. E. J. Horan, Exxon Research and Engineering Company, Post Office Box 8, Linden, NJ 07036

123. Mr. H. Jaster, General Electric Corporate Research and Development, General Electric Company, Schenectady, NY 13201
124. Mr. Ted Kapus, Acting Director, Consumer Products Division, Mail Stop 2221C, Department of Energy, 20 Massachusetts Avenue NW, Washington, DC 20545
125. Dr. R. M. Kelso, Associate Professor, School of Architecture, University of Tennessee, 100 Estabrook Hall, Knoxville, TN 37916
126. Mr. R. W. King, Manager, Advanced Engineering, Copeland Corporation, Sydney, OH 45365
127. Dr. Edward A. Kush, Associate Scientist, Solar Research Group, Brookhaven National Laboratory, Upton, NY 11973
128. Mr. Jim Leggoe, Philadelphia Electric Company, 2301 Market Street, Philadelphia, PA 19101
129. Mr. Herbert Lindahl, Manager Advanced Engineering, Bohn Aluminum and Brass Corporation, Heat Transfer Division, 1625 East Voorhees Street, Danville, IL 61832
130. Mr. Quentin Looney, Energy Utilization and Conservation Technology, Electric Power Research Institute, 3412 Hillview Avenue, Post Office Box 10412, Palo Alto, CA 94303
131. Mr. Harold G. Lorsch, Manager, Energy Laboratory Engineering Department, The Franklin Institute Research Laboratories, Twentieth and Parkway, Philadelphia, PA 19103
132. Mr. Hubert P. Luckett, Editor-in-Chief, Popular Science, 380 Madison Avenue, New York, NY 10017
133. Mr. Jim McCallum, Executive Editor, Air Conditioning and Refrigeration Business, 614 Superior Avenue West, Cleveland, OH 44113
134. Mr. Jack McCormick, Research Engineer, Northern States Power Company, 414 Nicollet Mall, Minneapolis, MN 55401
135. Mr. Robert Mauro, Electric Power Research Institute, 3412 Hillview Avenue, Post Office Box 10412, Palo Alto, CA 94303
136. Mr. John Millhone, Director, Office of Buildings and Community Systems, Mail Stop 2221C, Department of Energy, 20 Massachusetts Avenue NW, Washington, DC 20545
137. Mr. Dan Myers, Refrigeration Systems, 611 State Street, Newburg, IN 47630
138. Mr. Kenneth J. Nemeth, Executive Director, Southern States Energy Board, 2300 Peachford Road, One Exchange Place, Suite 1230, Atlanta, GA 30338
139. Mr. Bill Riley, Chief Engineer, Advance Development, Heil-Quaker Corporation, 647 Thompson Lane, Post Office Box 40566, Nashville, TN 37204
140. Mr. James K. Risher, Energy Resources Center, Honeywell, Inc., 2600 Ridgway Parkway, Minneapolis, MN 55413
141. Mr. A. H. Rosenfeld, Lawrence Berkeley Laboratory, Building 50B, Room 5246, Berkeley, CA 94720
142. Dr. David P. Ross, Senior Scientist, Energy Resources and Conservation Division, Science Applications, Inc., 2028 Powers Ferry Road, Suite 260, Atlanta, GA 30339
143. Mr. John D. Ryan, Program Manager, Technology and Consumer Products Branch, Mail Stop 2221C, Department of Energy, 20 Massachusetts Avenue NW, Washington, DC 20545

144. Mr. James L. Schulze, Technology Program Manager, General Electric Company, Appliance Park, Louisville, KY 40225
145. Mr. D. E. Sherpereel, Research and Engineering Center, Whirlpool Corporation, Benton Harbor, MI 49022
146. Dr. Mason H. Somerville, Manager, Engineering Experiment Station, University of North Dakota, Grand Forks, ND 48202
147. Mr. E. Spannhake, White Consolidated Industries, 11770 Berea Road, Cleveland, OH 44111
148. Mr. Richard D. Stewart, Manager, Advanced Technology Programs, General Electric Company, Appliance Park, Building 35, Louisville, KY 40225
149. Mr. Steven Strong, Solar Design Associates, 271 Washington Street, Canton, MA 02021
150. Mr. Floyd Stuckey, FSA Engineering Consultants, 315 East Sixth Street, Winfield, KS 67156
151. Dr. Walter D. Syniuta, Advanced Mechanical Technology Inc., 141 California Street, Newton, MA 02158
152. Ms. Susan S. Waddle, Department of Energy Oak Ridge Operations Office, Oak Ridge, TN 37830
153. Mr. Frank S. Wang, Research Specialist, Functional Products and Systems, Larkin Lab, Swede Road, Midland, MI 48640
154. Mr. H. F. Waser, FHP Manufacturing Company, 610 Southwest 12th Avenue, Pampano Beach, FL 33060
155. Mr. Robert G. Werden, Werden & Associates, Inc., Post Office Box 414, Jenkintown, PA 19046
156. Mr. Frank White, AiResearch Manufacturing Company, Post Office Box 3413, Oak Ridge, TN 37830
157. Institute of Energy Analysis, ORAU Library
158. Office of Assistant Manager, Energy Research and Development, DOE-ORO
159-185. Technical Information Center, Department of Energy, Post Office Box 62, Oak Ridge, TN 37830
186-550. Energy Conservation Distribution Mailing List and Energy Conservation Office (Bldg. 9102-1, Room 2)

☆U.S. GOVERNMENT PRINTING OFFICE: 1980-640-245/070