ornl

OAK
RIDGE
NATIONAL
LABORATORY

UNION
CARBIDE

ORNL/CON-38

Development of an Energy Consumption and Cost Data Base for Fuel Cell Total Energy Systems and Conventional Building Energy Systems

G. D. Pine
J. E. Christian
W. R. Mixon
W. L. Jackson

OPERATED BY
UNION CARBIDE CORPORATION
FOR THE UNITED STATES
DEPARTMENT OF ENERGY

ORNL/CON-38
Dist. Category UC-95d

CONTRACT NO. W-7405-eng-26

ENERGY DIVISION

Development of an Energy Consumption and Cost Data Base for Fuel Cell Total Energy Systems and Conventional Building Energy Systems

G. D. Pine, J. E. Christian, W. R. Mixon, W. L. Jackson
Oak Ridge National Laboratory

Research sponsored by the Division of Buildings and Community Systems and the Division of Conservation Research and Technology, U.S. Department of Energy, Under Contract No. W-7405-eng-26 with the Union Carbide Corporation, Nuclear Division, Oak Ridge National Laboratory, Oak Ridge, Tennessee 37830.

Date Published: July 1980

OAK RIDGE NATIONAL LABORATORY
Oak Ridge, Tennessee 37830
operated by
UNION CARBIDE CORPORATION
for the
DEPARTMENT OF ENERGY

TABLE OF CONTENTS

	Page
ABSTRACT	
1. INTRODUCTION	1
1.1 Background and Purpose of Report	1
1.2 Scope of Report	2
REFERENCES FOR SECTION 1	3
2. BUILDING AND LOAD CALCULATIONS	5
2.1 Load Calculation Methods	5
2.2 Building Types	5
2.3 Building Physical Characteristics	6
2.4 Building Operation	7
2.5 Weather Data	9
REFERENCES FOR SECTION 2	10
3. SYSTEM SIMULATIONS AND COST ESTIMATION	11
3.1 Description of Fuel Cell Systems	11
3.1.1 Fuel cells combined with electrically driven heat pumps	14
3.1.2 Fuel cells combined with gas boiler and electric chiller	18
3.2 Descriptions of Conventional Systems	20
3.2.1 Electric-chiller-gas-boiler system	21
3.2.2 Electrically driven heat pumps	22
3.3 Component Performance	22
3.4 Component Sizing	25
3.5 System Cost Estimation	27
REFERENCES FOR SECTION 3	31
4. EXTRAPOLATION OF REFERENCE BUILDING RESULTS TO OTHER BUILDING SIZES	33
4.1 Performance Data	33
4.2 Cost Data	35
REFERENCES FOR SECTION 4	38
5. RECOMMENDATIONS TO FUTURE ANALYSTS	39
5.1 Building Retrofit Costs	39
5.2 Alternative Modes of Operation	39
5.3 Energy Demand Variations	40
5.4 Additional "Fine-Tuning" Improvements	41
REFERENCES FOR SECTION 5	42
APPENDIX A. REFERENCE BUILDING PHYSICAL CHARACTERISTICS & LOAD PROFILES	43

Page

APPENDIX B. EFFECTS ON REFERENCE MULTIFAMILY RESIDENCE OF IMPLEMENTING IMPROVED ENERGY MANAGEMENT PRACTICES 53

APPENDIX C. COST & PERFORMANCE DATA USED AS INPUT TO RPA MARKET MODEL PROGRAM 59

ABSTRACT

This report describes the procedures and data sources used to develop an energy-consumption and system-cost data base for use in predicting the market penetration of phosphoric acid fuel cell total-energy systems in the nonindustrial building market.

A computer program was used to simulate the hourly energy requirements of six types of buildings — office buildings, retail stores, hotels and motels, schools, hospitals, and multifamily residences. The simulations were done by using hourly weather tapes for one city in each of the ten Department of Energy administrative regions. Two types of building construction were considered, one for existing buildings and one for new buildings.

A fuel cell system combined with electrically driven heat pumps and one combined with a gas boiler and an electrically driven chiller were compared with similar conventional systems. The methods of system simulation, component sizing, and system cost estimation are described for each system.

The systems were simulated for a single building size for each building type. Methods were developed to extrapolate the system cost and performance data to other building sizes.

1. INTRODUCTION

1.1 Background and Purpose of Report

The U.S. Department of Energy (DOE) is promoting the development of 40-kW(e) phosphoric acid fuel cell modules with waste-heat recovery. Groups of modules would be installed in a building to provide electricity, space cooling, and some space heating and water heating. The use of such total-energy systems would save energy as compared to supplying thermal and electrical energy independently. At full load, fuel cells would convert about 40% of the fuel energy into electricity, and an additional 46% would be available to meet thermal loads.

The Oak Ridge National Laboratory (ORNL), with the assistance of Resource Planning Associates, Inc. (RPA), undertook a study to provide DOE with sufficient market information for development of a national RD & D program for commercialization of phosphoric acid fuel cell total-energy systems (FCTES) for the nonindustrial building market. Specifically, the authors aimed to determine the expected market penetration, impacts, and benefits of FCTES in comparison to alternative systems. The influence of module size, location, user sector, and institutional constraints were considered in predicting the success of FCTES as a competitor.

ORNL assumed overall responsibility for performing the assessment and subcontracted with RPA to develop the market model and to study the nontechnical barriers and incentives likely to be associated with FCTES implementation. The study was organized in the following way: RPA developed data needed to define and segment the potential FCTES market by location, building sector, type of building construction, and building size distribution. RPA also developed information needed to define the economic climate in which FCTES would compete. ORNL developed system-cost and system-performance data characterizing each of four alternative building-energy systems in the potential market segments defined by RPA. These data were used in a market-penetration model, developed by RPA, to predict the penetration of FCTES in the nonindustrial building-energy-system market.

The results and conclusions of the market assessment were published in another report.[1] Only the methods and data used by ORNL to characterize the cost and performance of the four alternative systems in the RPA market segments are presented here. We hope that this information will prove useful to others who wish to perform similar analyses.

1.2 Scope of Report

RPA divided the potential FCTES market into a total of 5400 segments (10 regions × 9 building types × 2 types of construction × 30 building size ranges). Then they developed a market-penetration model that used the market-segment data together with cost and performance data for each alternative building energy system in each segment to project the probable market penetration of FCTES. This report documents the methods and assumptions used by ORNL to generate the system-cost and -performance data.

ORNL developed a computer program to calculate hourly building energy demands and to simulate the performance of desired systems on the basis of system-component properties and weather data. Choosing component sizes for and costing of each system required manual calculations. The effort required to go through the entire process for each of the 21,600 cases (4 systems × 5400 segments) would have been prohibitively costly, so approximations were made and algorithms devised to reduce the number of simulations involved to 480 — a large, but manageable number. Specifically, the nine building sectors were modeled with six types of structures, and algorithms were developed to allow extrapolation of simulation results from one building size to all other sizes for a particular building sector, type of construction, and location.

Section 2 of this report contains a discussion of the data and methods used to estimate building energy requirements. Section 3 contains descriptions of the systems compared and of the approach used to size and cost the major components of each system. Section 4 discusses the development of algorithms for extrapolating the results of the 480 segments simulated to all other segments. Section 5, discusses possible improvements in the methods of analysis. Section 5 is designed to benefit those who

undertake similar analyses in the future. Finally, the Appendices contain an extensive compilation of building data and system-performance results.

REFERENCE FOR SECTION 1

1. W. R. Mixon et al., *Market Assessment of Fuel Cell Total Energy Systems, Summary Report,* ORNL/CON-36, Oak Ridge National Laboratory, Oak Ridge, Tennessee, March 1979.

2. BUILDING LOAD CALCULATIONS

The calculation of annual electricity and gas requirements is a two-step process. The building demand characteristics are estimated from weather data, building-shell characteristics, and operating conditions. The building-load data are then combined with system-operating characteristics to estimate fuel inputs necessary to supply building loads. This section presents the data and methods used to calculate the building loads; the next section describes the system simulations.

2.1 Load Calculation Methods

Building space-heating and -cooling loads were calculated with an ORNL computer program based on transfer functions[1] to model thermal transport between the interior and exterior of buildings. The program is an implementation of Chapter 22, "Air-Conditioning Cooling Load," of Ref. 1. Loads are calculated on an hourly basis, including heat gains or losses from internal sources, insolation, ventilation and infiltration, and thermal conduction. Hourly weather tapes provide dry-bulb temperature, humidity ratio, and cloud-cover factor, which are required for the calculation. The program also requires the following building physical properties and use characteristics: floor, wall, glass, and roof areas; wall, glass, and roof conductivities; and hourly profiles for ventilation and infiltration, indoor temperature, humidity, occupancy, domestic hot water, and electricity. The reader is referred to Ref. 2 for more detail concerning the computer program.

2.2 Building Types

Six types of structures were chosen for simulation — multifamily residences, office buildings, hospitals, schools, hotels and motels, and retail stores. A specific building design was chosen for each building type, on the basis of reviews of available literature and American Society for Heating, Refrigeration, and Air-Conditioning Engineers (ASHRAE) suggested design criteria. A brief summary of the important characteristics

of the six building types is shown in Table 2.1. The use of six building types to represent the entire potential nonindustrial fuel cell market results from some compromises and aggregations considered essential to obtain a national market-potential estimate at an acceptable cost and within a reasonable time. For example, the reference office building was chosen to represent also public administration buildings and other institutional buildings (e.g., post offices), while the reference school building represents all elementary and high schools as well as colleges. Some sectors, such as warehouses and nursing homes, were not included at all. Questions about more specific market sectors (e.g., grocery stores) or smaller geographic regions would require a more specific and detailed analysis, but the methods developed for this study would still be appropriate.

Table 2.1. Reference building characteristics (Existing buildings)

	Retail store	Office	Hospital	School	Multifamily residence	Motel
Floor area, m^2	1120	3760	9290	3720	4010	3720
Stories	1	3	4	1	2	2
Ceiling height, m	5.6	3.7	4.0	4.3	2.4	2.7
Glass area, % of wall area	10	30	25	20	18	30
Design indoor temperature, °C	23	23	23	23	23	23
Design relative humidity, summer control only	50%	50%	50%	50%	50%	50%
Infiltration and ventilation, air changes/hr	0.6	1.75	2.9	2.0	1.0	1.7
Peak domestic electric load, W/m^2	46	120	52	43	13	16
Peak occupancy	60	253	560	500	163	160

2.3 Building Physical Characteristics

As mentioned above, one specific building design for each of six structures was used to model the fuel cell market. Two levels of construction were used, one representative of well-designed existing buildings, and one based on the proposed design procedures specified in ASHRAE 90/75[3] for new buildings. The assumed quality of construction (and operation)

is better than that found in many existing buildings, but implementation of energy-conservation measures having short payback periods (typically less than one year) and involving little or no disruption of occupant activities would result in building characteristics similar to those assumed (see Appendix B). The most important physical characteristics of the reference multifamily residence are shown in Table 2.2 and Fig. 2.1. Properties of the other reference buildings are included in Appendix A.

Table 2.2. Reference multifamily residence

	Structural and energy-related characteristics	Energy-conservation measures
Basic design	4-building, 12-unit cluster (11.0 m × 45.7 m)	Same as existing structure
	2-floors, 2.4-m ceiling height	
Total areas, m^2		
Floor	4010	Same as existing structure
Wall	1855	
Glass	401 (18% of total wall area)	
Roof	2006	
U values, $w/m^2 \cdot K$		
Wall	0.68	Decreased to 0.45 for all northern climates
Glass[a]	6.42	Same as existing structure
Roof	0.28	Same as existing structure
Infiltration + ventilation[b]	1 air change/hour	0.5 air change/hour
Indoor design conditions	23°C dry bulb temperature, ±0.8°C dead band	25.6°C dry bulb temperature for cooling season, 22°C for heating, ±0.8°C dead band
	50% relative humidity, summer controlled	50% relative humidity, summer controlled
Occupancy[c]	3.4 persons per apartment	Same as existing structure
Domestic hot water[d]	60°C water 220 liters/day-apt.	Same as existing structure
Domestic electricity[e]		Same as existing structure
Peak diversified load per apartment	1.125kW	
Average annual use per apartment	5231 kWhr	

[a]Single glazing with a shading factor of 0.56.

[b]Assumed to be constant every hour of every day.

[c]See Fig. 2.1a.

[d]See Fig. 2.1b.

[e]See Fig. 2.1c.

2.4 Building Operation

Building construction is important in determining solar-radiation loads and conductive, convective, and radiative heat losses or gains

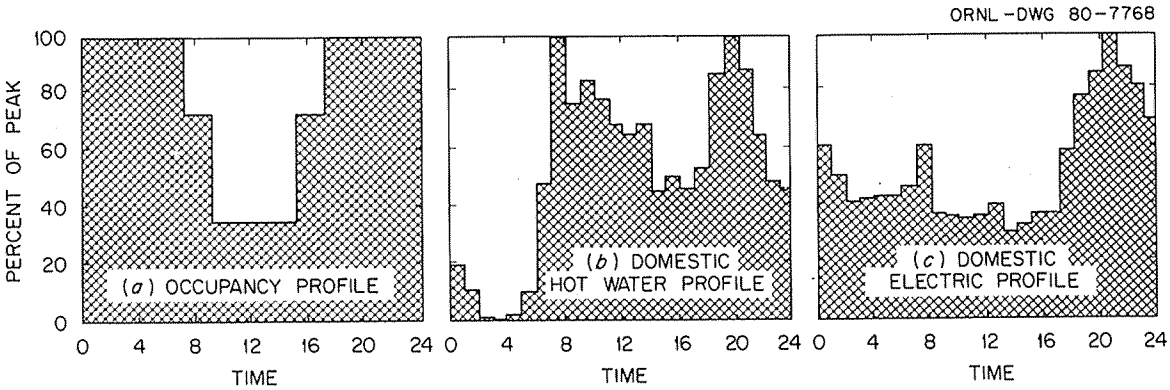

Fig. 2.1. Reference multifamily residence load profiles. (Midnight: Time = 0). Data derived from W. R. Mixon, et al, *Technology Assessment of Modular Integrated Utility Systems*, ORNL/HUD/MIUS-25, Oak Ridge National Laboratory, Oak Ridge, Tennessee, December, 1976.

through the shell. However, building use is generally the dominant factor in determining the energy needs of buildings, especially of commercial buildings. High lighting levels, refrigeration equipment, computers, large hot water demands, and required ventilation are examples of internal loads that may make the shell characteristics almost irrelevant.

The operating characteristics used for the simulations in this study are shown in Appendix A. These characteristics were determined from a variety of sources as shown in the tables, but generally followed ASHRAE recommendations. The use of the load data in the simulation is discussed in Sect. 3, but data for the multifamily residence are included here in Table 2.2 for reference.

As is the case for the selection of building types, the selection of reference building profiles to represent all buildings in a particular sector implies that many buildings are poorly represented by the models. Although some buildings may have quite different load profiles from the models, and some may use energy much more extravagantly, the models were chosen to represent sound energy-management practice in today's world of increasing real-energy costs. Appendix B illustrates the effects of the extravagant energy users' implementing relatively simple improvements in energy-management procedures. Such measures are likely to be cost effective, and fuel cell systems should be used in conjunction with conservation — not as a substitute for it. As for the load profiles, it seems

reasonable to assume that the different profiles would favor fuel cells as often as not and that the net effect would be insignificantly different from the predictions.

2.5 Weather Data

The demands for space heating and cooling depend on the climate where a building is located. One city in each of the ten DOE administrative regions was chosen for simulation, partially to reflect regional-fuel price variations and partially to model climatic variations. The cities chosen are displayed in the map in Fig. 2.2.

The building load simulation was done on an hourly basis. Required weather data included the outdoor dry-bulb temperature, relative humidity, and the total cloud cover for each hour of the year. These data were obtained from standard U.S. Weather Bureau tapes from a station in or

ORNL–DWG 78-20198

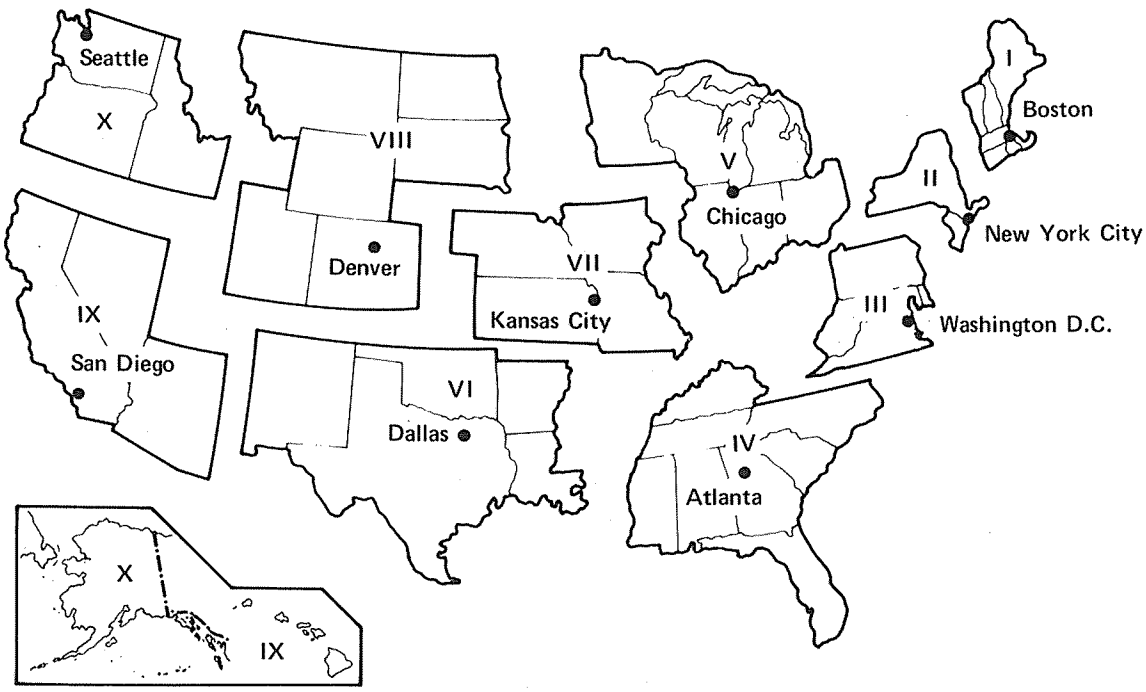

Fig. 2.2. Department of energy regions.

near each of the ten cities. To remove the problem of inadvertently selecting an atypical year for the simulations, five years (1955 through 1959) were simulated and annual load values were averaged over the five years for all loads except the electric load. The design electric load was based on the peak one-hour electric load observed during the five-year period.

REFERENCES FOR SECTION 2

1. *ASHRAE Handbook of Fundamentals*, American Society of Heating, Refrigerating and Air-Conditioning Engineers, Inc., New York, NY 1972.
2. E. C. Hise et al., *MIUS Systems Analysis: Comparison of MIUS and Conventional Utility Systems for an Existing Development*, ORNL/HUD/MIUS-20, Oak Ridge National Laboratory, Oak Ridge, Tennessee, June 1976.
3. *Energy Conservation in New Building Design: An Impact Assessment of ASHRAE 90/75*, Conservation Paper Number 43B, Federal Energy Administration, Washington, D.C., August 1975.

3. SYSTEM SIMULATIONS AND COST ESTIMATION

For this analysis, market penetration of competing systems was based on the present value of total life-cycle costs, which included capital, maintenance, and fuel costs; the latter costs depended on system-performance characteristics. For single-building heating and cooling applications, the most prevalent systems envisioned to be in use are electric heat pumps and central electric chillers combined with a fossil-fueled boiler. Each of these systems can be combined with fuel cell electrical generation with waste-heat recovery.

Each of these four systems, two fuel cell systems and two conventional systems, was simulated in each type of reference building, in each location.

All systems were assumed to be central systems; thermal energy was distributed within each building by means of hydronic loops, and fan-coil units extracted the energy at the points of use. The results can, however, be applied equally to forced-air systems. Retrofit costs for existing building thermal-distribution systems were ignored as they would apply equally to all systems. For some buildings with steam heating systems, the use of unitary cooling systems that do not rely on central distribution may be preferable to conversion to a central system. To the extent that this is true for existing buildings, the potential FCTES market was overestimated. Cost and performance data were determined from the system simulations, and these data were used as input to the RPA market-penetration model. Other systems (e.g., alternative total-energy systems, solar systems, or urban district heating in conjunction with central-station electricity generation) might also prove to be competitors, but inclusion of such additional systems was beyond the scope of this study. Inclusion of additional systems would, of course, reduce the projected market penetration of the FCTES.

3.1 Description of Fuel Cell Systems

The phosphoric acid fuel cell modules consist of a self-contained package whose components are a fuel processor, which converts an available fuel, such as natural gas or naptha, into a hydrogen-rich gas mixture; the

fuel cell stack, which produces direct current electricity; an inverter, which converts the direct current electricity into alternating-current electricity; and a heat-recovery system, which removes surplus thermal energy from the fuel cell stack and fuel processor for use in building space-conditioning and water-heating systems. In addition, an air-cooling system is provided to remove the thermal energy if it is not needed in the building. A block diagram of a fuel cell total energy system module is shown in Fig. 3.1.

The recovered thermal energy can be obtained partially as steam (120-155°C) and partially as hot water (90°C), if desired, or entirely as hot water (95-100°C). The quantities of energy available are shown in Fig. 3.2. The fuel cell thermal energy is coupled to building systems by heat exchangers on the outside of the fuel cell modules in addition to those shown in Fig. 3.1 to avoid contamination of fuel cell piping by impurities and air from building piping. Water is used as the heat-transfer fluid in all loops. The heat exchangers outside the fuel cell module may

ORNL-DWG 79-19783

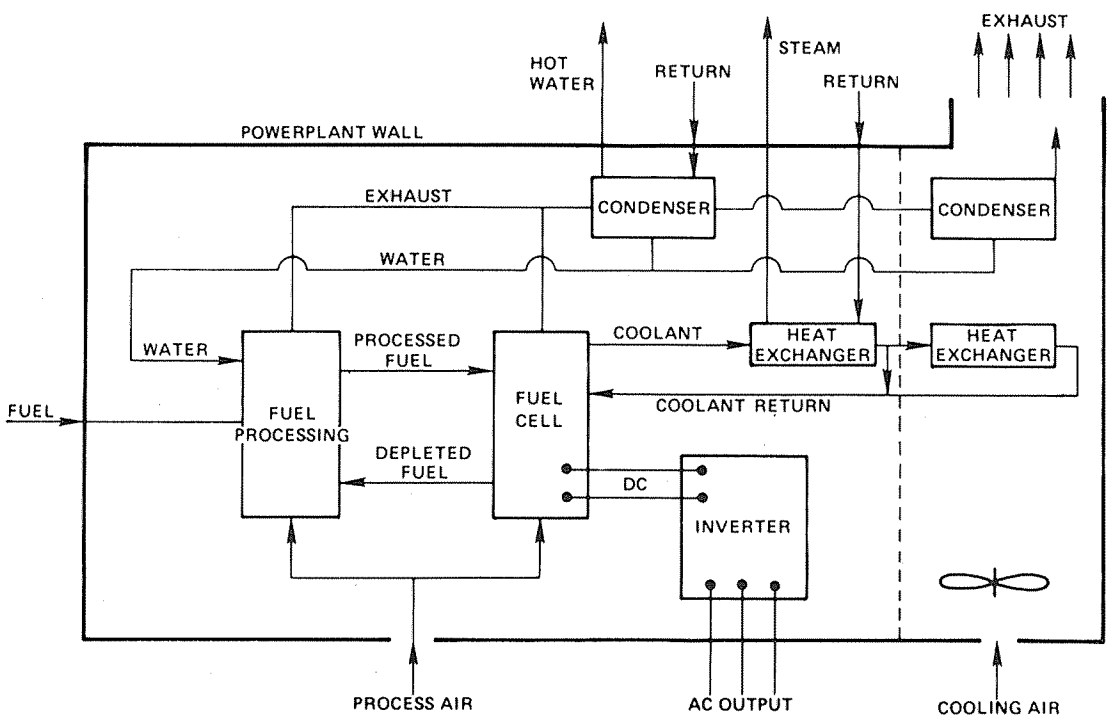

Fig. 3.1. Block diagram of fuel cell total energy system.

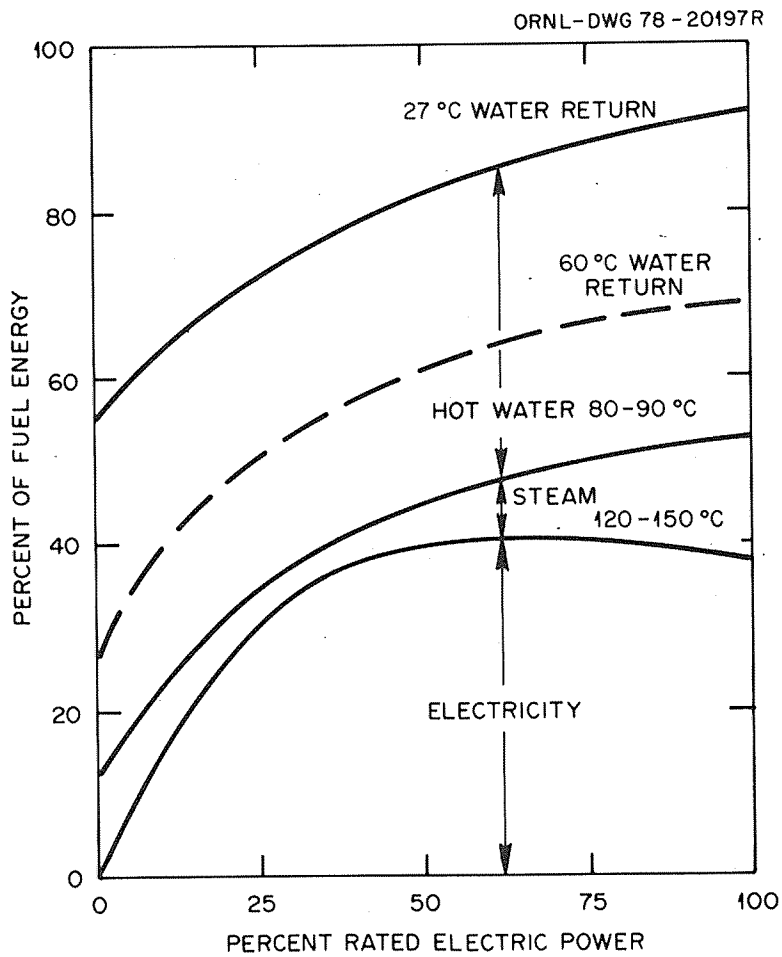

Fig. 3.2. Energy production capability of fuel cell module. Source: United Technologies Corporation.

not be required for many systems; if they are not, the system cost will be somewhat lower than calculated, and the potential system efficiency will be increased by the elimination of heat-exchanger temperature drops.

The FCTES is assumed to supply all the building electricity requirements in an electrical-load-following mode and is isolated from the electrical grid. Fuel cell reliability is assumed to be equal to that of the grid. Various other modes of operation are possible but were considered to be beyond the scope of this study.

The recovered thermal energy is generally inadequate to supply all building space- and water-heating needs, so supplemental equipment is required. Provision must also be made for space cooling of the building. The first fuel cell system relies on an electrically driven heat pump

with gas boiler backup for space heating and cooling; the second relies on a gas boiler for heating and an electrically driven chiller for cooling. Supplementary water heating is accomplished with a gas water heater in each case. Thermal-energy storage is not included in either system, nor are absorption chillers. Although thermal-energy storage produced a small (2-3%) fuel savings, the estimates suggested that the economics of storage were marginal and that system comparisons would not be significantly changed by its inclusion. However, because of the potential energy savings of thermal storage, optimization of fuel cell systems with thermal storage might be an appropriate topic for future research.

3.1.1 Fuel cells combined with electrically driven heat pumps

Because a heat pump extracts thermal energy from its environment, the fuel cell combined with electrically driven heat pumps is capable of supplying more thermal energy to the building than the energy content of the fuel alone. For example, if 38.5% of the available (lower heating value) fuel energy is converted to electricity and used to drive a heat pump with a coefficient of performance (COP) of 2.0, and 45% of the available fuel energy is converted to usable waste heat, 122% of the available fuel energy is available as thermal energy. For comparison, a fossil-fueled boiler seldom has a fuel utilization efficiency greater than 75%, and a heat pump with a COP of 2.0 operating from grid electricity (30% system efficiency for generation and distribution combined) has a fuel utilization efficiency of 60%.

Such high efficiencies for the fuel cell system will seldom be realized on an annual basis because of mismatches between available waste heat and thermal energy needs. However, if the ratio of thermal energy to electrical energy requirements is large enough, a fuel cell-heat pump system can supply all electrical and thermal energy requirements with less natural gas than that needed for only space and water heating with a conventional gas-fueled boiler and water heater. United Technologies

Corporation (UTC) has found this to be the case when T/E ratio* is greater than about four. Since the reference building designs (discussed later) had T/E ratios smaller than four, a net gas savings was never realized. Sample energy balances for the fuel cell-heat pump and conventional gas boiler-electric chiller systems for the reference multifamily residence in DOE Region 2 NYC are shown in Figs. 3.3 and 3.4. In this case, the fuel cell system consumes 36% more gas than the conventional system.

A block diagram of the fuel cell-heat pump system is shown in Fig. 3.5. The fuel cell block represents from two to six individual modules operated in parallel. Two identical heat pumps were assumed for the simulation, because two would be used in practice to improve system reliability. Reciprocating heat pumps were used for units with capacities up to 280 kW(t) (80 tons), while centrifugal units were used when larger capacities were required.

A gas boiler provided backup and thermal peaking when recovered heat and the heat-pump heat were not enough to meet the load. Supplementary water heating was provided by a gas heater. This differs from the conventional electrically driven heat pump system for which supplementary systems are likely to be electric also. The system shown is much more economical than supplying extra fuel cell capacity for supplementary electric heating.

Computer simulation of system operation duplicates the operation of the control system (not shown in the block diagram). As mentioned earlier, the fuel cell modules follow the building electrical demand. The building thermal demands are satisfied according to the system logic summarized in Table 3.1.

The heat pumps are sized to supply the design building-cooling load. The electricity necessary to run the heat pump — for summer cooling or winter heating — and to supply the remaining building-electrical loads

---

*The T/E ratio as defined here is the ratio of the energy content of the metered gas to the energy equivalent of the delivered metered electricity, based on the use of a conventional gas boiler-electric chiller system. Thus, as defined, variations in T/E reflect differences in buildings and local weather, the system dependence being removed by assuming the same type of system for all buildings.

$$T_e = \frac{\text{energy content metered gas}}{\text{energy equivalent of delivered metered electricity}}$$

ORNL-DWG 78-20187R

SAMPLE ENERGY BALANCE: FUEL CELL SYSTEM

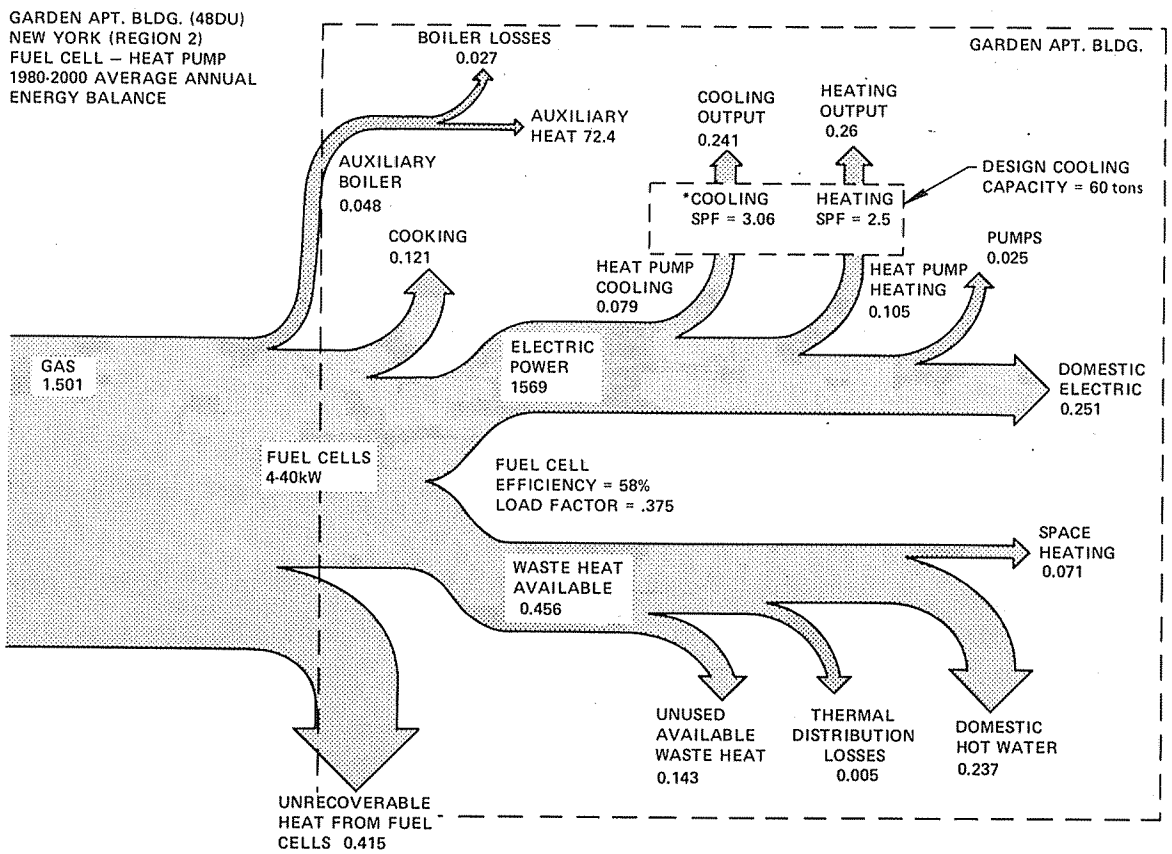

NOTE: ALL VALUES = 10^6 EQUIVALENT kWhr
*SPF = SEASONAL PERFORMANCE FACTOR OVER (1) COOLING SEASON
(2) HEATING SEASON. OUTPUT/INPUT

Fig. 3.3. Sample energy balance, fuel cell system.

determines the operating schedule of the fuel cell modules and, consequently, the schedule of waste heat availability.

The domestic hot water is heated first by the low-temperature waste heat (leaving the fuel cell at 60°C). Approximately 90% of the total hot-water load can be met by this stream. The remainder of the hot-water load is then supplied by the medium-temperature waste heat stream (leaving the fuel cell at 70°C). If the hot-water load is still unsatisfied, the required energy is obtained first from the water-storage tank (sized according to ASHRAE recommendations) and, if necessary, by firing the auxiliary gas heater. Although water could be heated by use of the 120°C

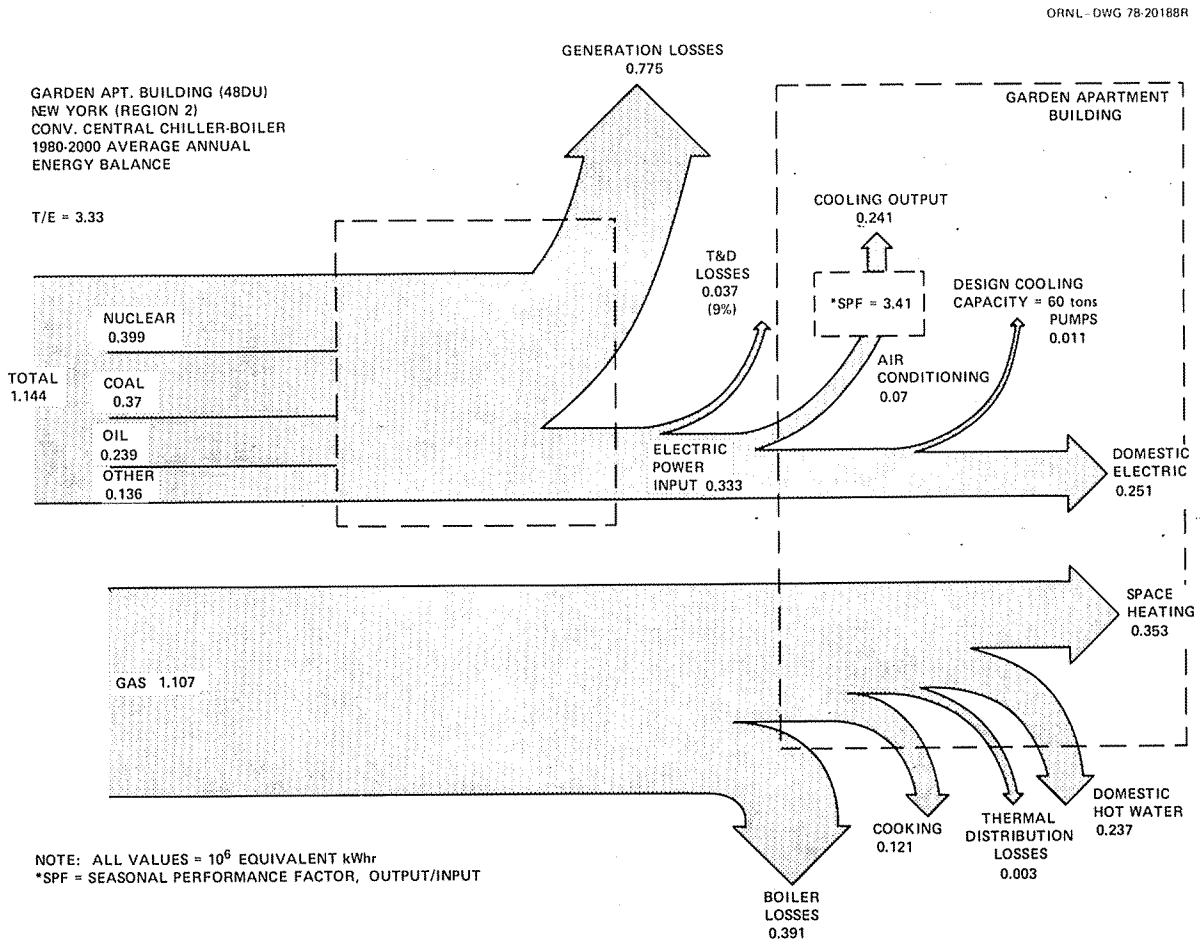

Fig. 3.4. Sample energy balance, conventional system.

waste-heat stream, the lower-temperature streams were sufficient for the reference buildings.

The space-heating load draws first on the remaining medium-temperature and then upon the high-temperature waste-heat streams. The unmet demand is supplied first by the heat pump and then, if necessary, by the auxiliary boiler.

Any surplus (60 or 70°C) waste heat generated during heat pump operation (heating or cooling) is dumped into the domestic hot-water storage tank until its capacity is filled. Additional waste heat is then discharged by the fuel cell air-cooling system.

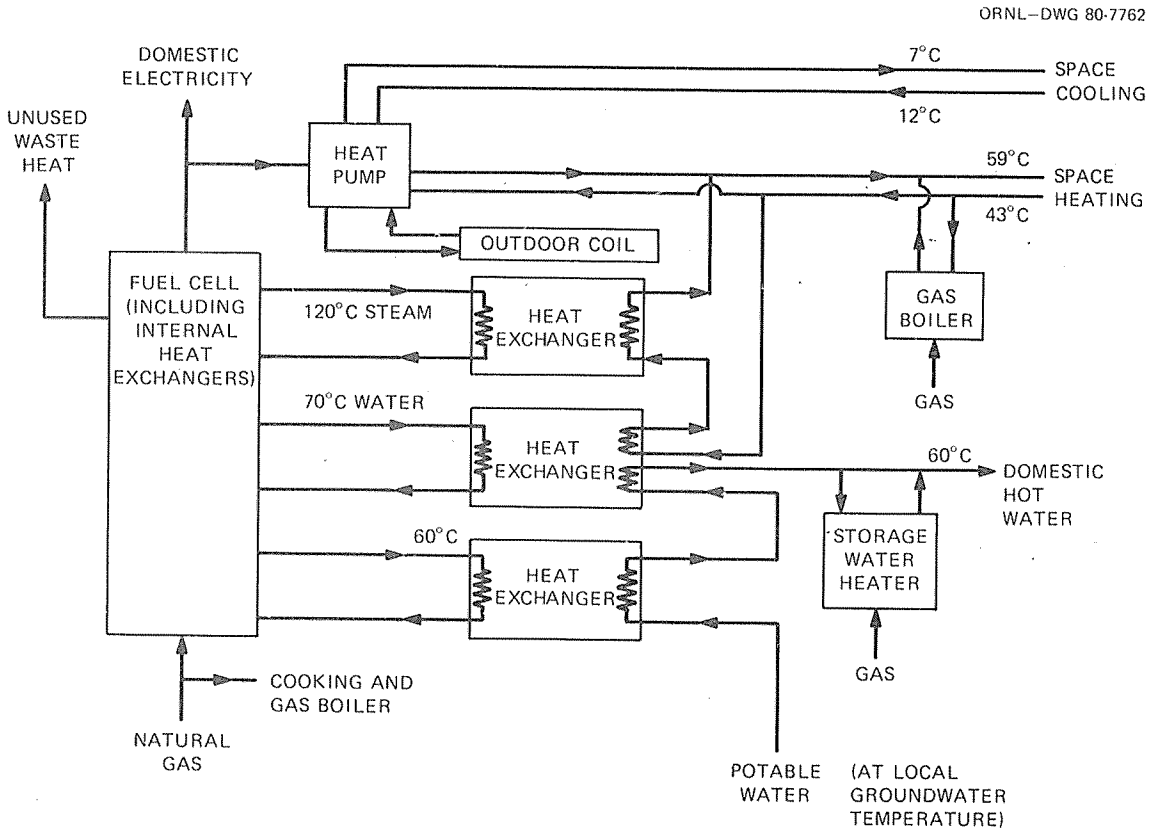

Fig. 3.5. Block diagram of fuel cell-heat pump system.

3.1.2 Fuel cells combined with gas boiler and electric chiller

As noted above, the fuel cell–heat pump system has a very high potential efficiency. Unfortunately, the initial cost is also rather high. An alternative to the heat pump is a gas boiler to supplement the fuel cell waste heat and an electric chiller to provide cooling (see Fig. 3.6). This is advantageous in that the chiller is cheaper than the heat pump and in that a more economical evaporative cooling tower can be used rather than the dry tower (outdoor coil) used in the heat pump system. For small buildings, dry towers may be used rather than the evaporative towers, but most buildings for which fuel cell systems are likely to be used are large enough that evaporative towers would probably be preferred. The result is a system which is somewhat less energy efficient than the heat pump system, but much lower in first cost. This system generally turned out to be economically favored over the fuel cell–heat pump system on the basis of present-worth–life-cycle cost.

Table 3.1. Supply and demand priorities for fuel cell systems

DEMAND SITE PRIORITIES

Priorities for heat source for water heating

1. 60°C fuel cell water
2. 70°C fuel cell water
3. Domestic hot water storage
4. Gas water heater or boiler

Priorities for heat source for space heating

1. 70°C fuel cell water
2. 120°C fuel cell steam
3. Heat pump (for System 1 only)
4. Gas boiler

SUPPLY SIDE PRIORITIES

Priorities for use of heat from 60°C water

1. Water heating

Priorities for use of heat from 70°C water

1. Water heating
2. Space heating
3. Domestic hot water storage

Priorities for use of 120°C steam

1. Space heating

As in the heat pump system, from two to six fuel cell modules were used in parallel. Two electric chillers were used, again for reliability purposes. The gas boiler for this system was generally somewhat larger than the boiler for the fuel cell-heat pump system. Again, the supplementary water heater was gas-fired.

The system-simulation logic is somewhat simpler than that of the fuel cell-heat pump system, because there is no heat pump for winter heating (see Table 3.1). The fuel cell modules still follow the electrical load (including the chiller), and the resulting operating schedule again determines the schedule of waste-heat availability.

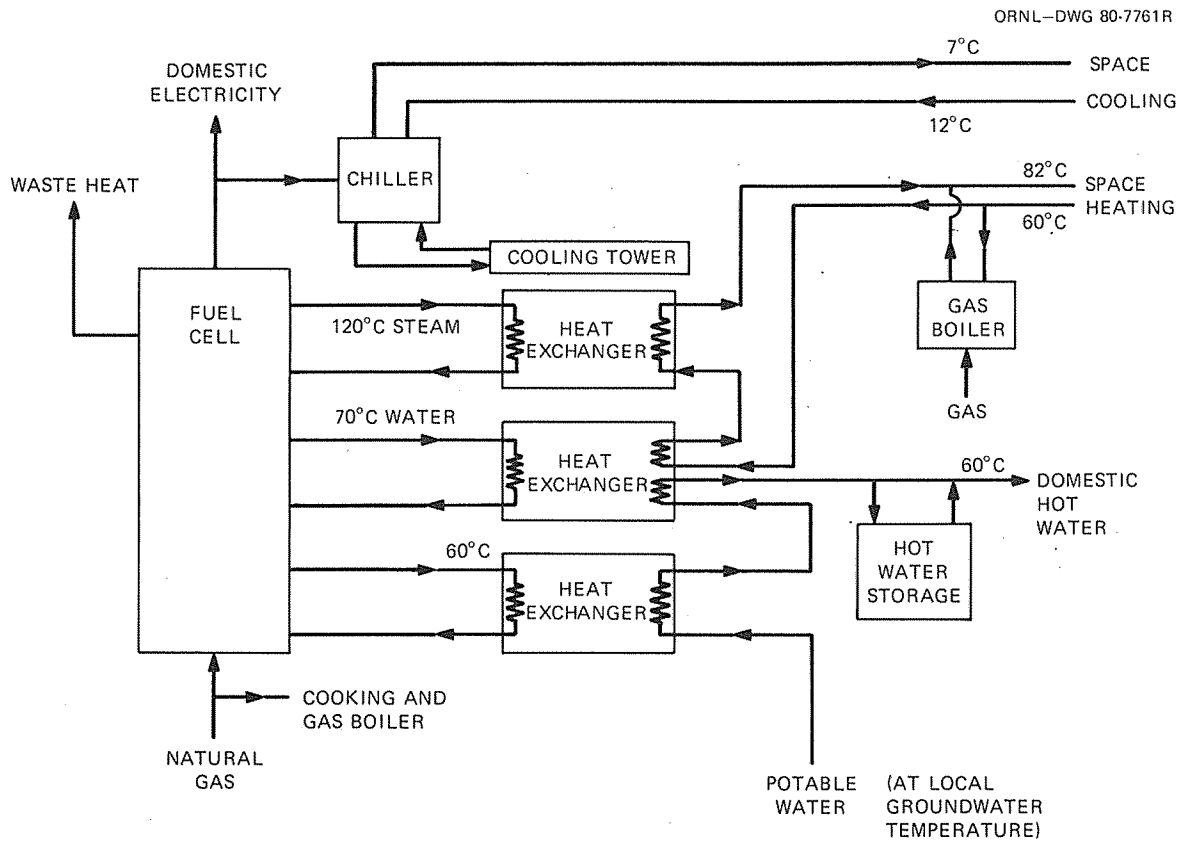

Fig. 3.6. Block diagram of fuel cell–gas boiler–electric chiller system.

The domestic hot water load is met according to exactly the same logic as for the fuel cell–heat pump system. See Section 3.1.1 for a discussion.

The space heating is again supplied first by the medium-temperature and then by the high-temperature waste heat streams. Any unmet demand is satisfied by the auxiliary gas-fired boiler.

Any excess (60°C and 70°C) waste heat is again channeled to the domestic hot water storage tank as long as its capacity is not filled. Additional waste heat is discharged by the fuel cell air-cooling system.

3.2 Descriptions of Conventional Systems

Two conventional systems were included as competitors to fuel cell total-energy systems. One system relies on a gas boiler for space heating, a gas water heater, and an electric chiller; the other on a heat pump with an auxiliary electric boiler for space heating and cooling and an electric

water heater. These systems are essentially the same as the two fuel cell systems without the fuel cell modules, except that supplementary heat is provided by electricity rather than by gas for the conventional heat-pump system. The gas boiler–electric chiller system generally had the lower present-worth–life-cycle cost of the two conventional systems.

3.2.1 Electric-chiller–gas-boiler system

A block diagram of the conventional electric-chiller–gas-boiler system is shown in Fig. 3.7.

Two chillers were used in each installation. As for the fuel cell system with central boiler and chiller, electric compression units were

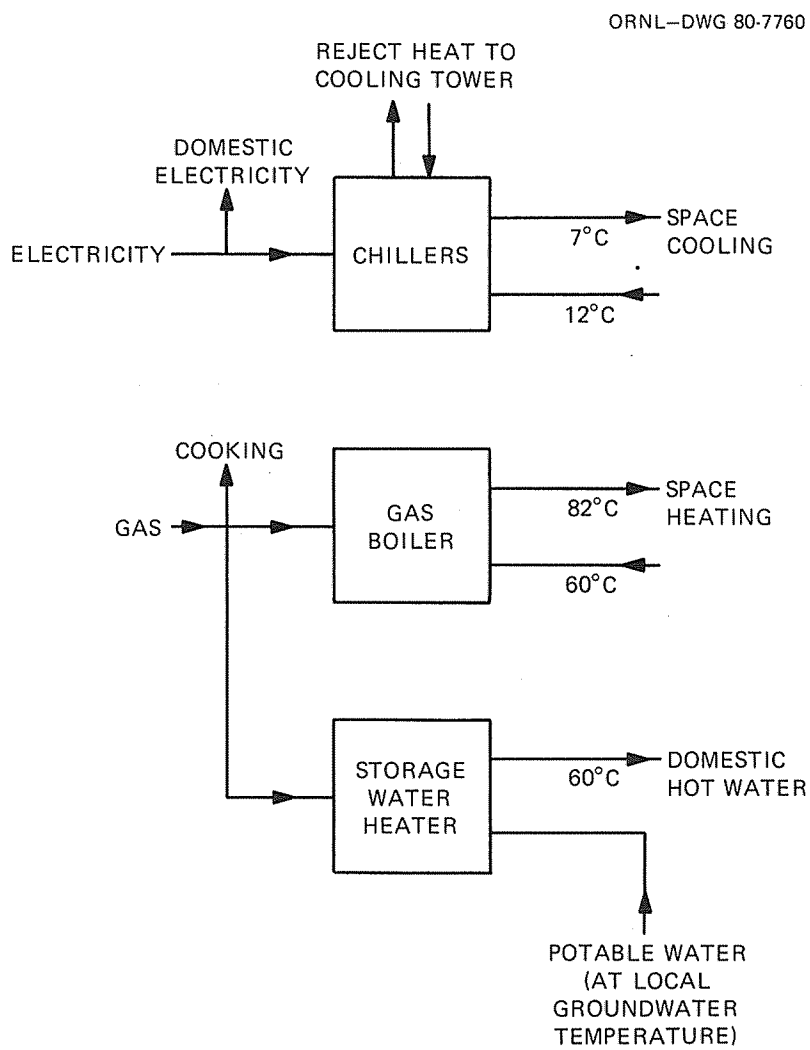

Fig. 3.7. Block diagram of gas boiler–electric chiller system.

used, reciprocating compressors for units up to 280 kW(t) (80 tons) and centrifugal for larger units. A mechanical-draft evaporative cooling tower was used for this system. Dry cooling towers may again be preferred for small buildings, but most buildings that might use fuel cells are large enough to make evaporative towers preferable.

Space heating was provided entirely by a gas boiler and water heating by a gas water heater. Cooking was done by gas stove. Electricity was used in the building for lighting, fans, elevators, pumps, etc. Thus, both electricity and natural gas were required and were supplied by conventional utilities.

3.2.2 Electrically driven heat pumps

A block diagram of the conventional heat pump system is shown in Fig. 3.8. All building utilities were provided with electricity; no gas was used. Two water-to-water heat pumps were used in each installation. Reciprocating compressors were again used for unit sizes up to 280 kW(t) (80 tons) and centrifugal for larger units. Cooling towers (outdoor coils) were the dry type since they served for winter heating as well as cooling. The supplementary boiler was electric as were the water heater and the cooking appliances.

3.3 Component Performance

As Sect. 3.2 indicates, reciprocating or centrifugal heat pumps or chillers were used for buildings with design cooling loads up to or over 560 kW(t) (160 tons) respectively. The capacities and coefficients of performance were assumed to depend only on the ambient dry-bulb temperature according to Eqs. (1–4) and the coefficients shown in Table 3.2. The coefficients of performance were assumed to be independent of the fractions of time the units operated (i.e., inefficiencies caused by on-off cycling of the units were not considered).

For cooling, these equations assume a chilled-water supply temperature of 7°C and for heating a hot-water supply temperature of 40°C. The equations are valid for outdoor temperatures between 27°C and 43°C for cooling and between -23°C and 21°C for heating. The derivation of the equations is discussed in refs. 1 and 2.

ORNL–DWG 80-7759

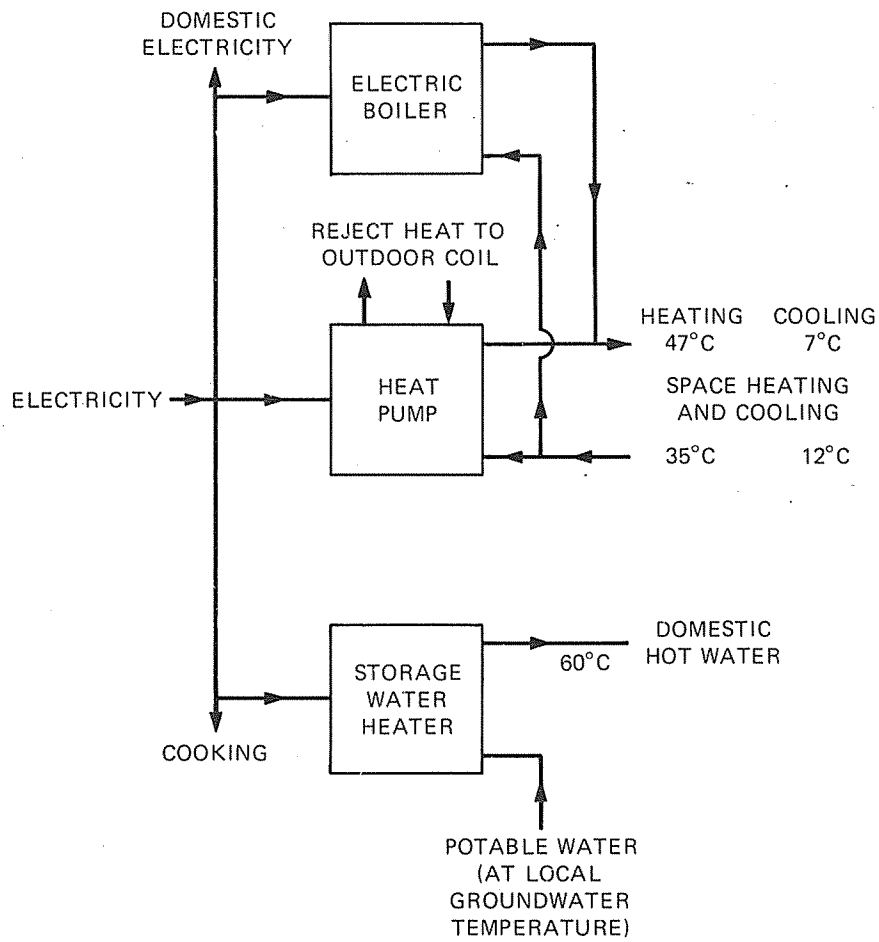

Fig. 3.8. Block diagram of electric heat pump system.

Table 3.2. Coefficients for heat pump and chiller performance equations

	NCOPC	NCOPH	NCAPC
Heat pumps			
Reciprocating	2.55 8.7 SEER	2.90	Determined by building-design cooling load
Centrifugal	3.37 ?	2.80	
Chillers			
Reciprocating	2.73 1.29 kw/ton		
Centrifugal	3.60 0.98 kw/ton		

Source: J. E. Christian, *Unitary Water-to-Air Heat Pumps*, ANL/CES/TE-77-9, October 1977; J. E. Christian, *Central Cooling-Compressive Chillers*, ANL/CES/TE-78-2, March 1978.

The nominal cooling capacity was determined by the design building load. For the heat pumps, the nominal heating capacity is assumed to be 90% of the nominal cooling capacity. The nominal cooling and heating capacities are equipment characteristics specified by heat pump and chiller manufacturers.

$$COPC = \frac{NCOPC}{100} [149.4 - 1.052T + 0.00289T^2] \quad (1)$$

$$CAPC = \frac{NCAPC}{100} [152.6 - 1.805T - 0.01834T^2] \quad (2)$$

$$COPH = \frac{NCOPH}{100} [90.98 + 1.386T - 0.01834T^2] \quad (3)$$

$$CAPH = \frac{0.9NCAPC}{100} [78.93 + 2.898T + 0.01693T^2] , \quad (4)$$

where

COPC, COPH = coefficients of performance (COP) for cooling and heating respectively,

NCOPC, NCOPH = nominal COPs for cooling and heating respectively,

CAPC, CAPH = cooling and heating capacities respectively [kW(t)],

NCAPC = nominal cooling capacity [kW(t)] (defined at 35°C outdoor temperature),

T = ambient dry-bulb temperature (°C).

Pumps for the water distribution systems were assumed to be centrifugal pumps with an electrical-to-mechanical conversion efficiency of 90%.

Electric boilers and water heaters were assumed to have an electrical-to-thermal conversion efficiency of 80%, and gas boilers and water heaters were assumed to have an annual-average efficiency of 55%. The efficiency of the electric boiler was assumed to depend on the fraction of time that the unit operated during a particular hour according to Eq. (5).

$$\eta = 43.766 + 0.645f + 0.003344f^2 , \quad (5)$$

where

η = boiler efficiency, and

f = fraction of time that a unit operated.

Mechanical-draft cooling towers were assumed to require 10 kWh for fans and pumps for every 10^9 J of energy discharged to the environment.

Fuel cell-module performance was discussed in Sect. 3.1. The performance data supplied by UTC and shown in Fig. 3.2 were incorporated into the simulation code.

3.4 Component Sizing

Component sizes were determined by using the computer program and component-performance data discussed in Sect. 2. Initial estimates of component sizes were used as input to the program, and calculated demands were used to optimize the component sizes.

Since the predicted market penetration depended on relative present-worth-life-cycle costs of the competing systems, components common to all systems did not need to be sized, and their costs were not included in the system costs. Components that were not common to all systems were sized and costed for each reference building in each region by the methods described below. Methods used to extrapolate these results to other building sizes are discussed in Sect. 4.

Heat exchangers were required to transfer fuel cell waste heat to building space- and water-heating systems. System costs were based on the use of tube-and-shell type heat exchangers. Heat exchanger size was determined by examining peak load requirements and the thermal energy supply capability of the fuel cell modules. If the fuel cell modules could supply more energy in the pertinent waste-heat stream than would ever by demanded by the building, the exchanger was sized for the peak building demand. If the fuel cell modules' waste heat stream could supply less energy than the peak building demand, the exchanger was sized to handle the fuel cell module supply capability.

The heat exchangers were designed according to the formula:

$$\frac{dq}{dt} = UA \ \Delta T_{LM} \ ,$$

where

$\frac{dq}{dt}$ = heat transfer rate (watts),

U = average heat transfer coefficient (watts/m^2·K),

A = heat exchanger effective area (m^2),

ΔT_{LM} = logarithmic mean temperature difference (K),

$$= \frac{\Delta T_1 - \Delta T_2}{\ln(\Delta T_1/\Delta T_2)},$$

ΔT_1, ΔT_2 = temperature differences between primary and secondary fluids at opposite ends of exchanger (K).

ΔT_{LM} can be determined from the temperatures shown in Figs. 3.5 and 3.6. U values used were 860 for steam-to-water heat exchangers and 350 for water-to-water heat exchangers. Once these values were determined, A, could be calculated. This area was then used as described in Sect. 3.5, to determine the heat exchanger cost.

Pumps were required to distribute water for space heating and cooling. Centrifugal pumps were chosen and sized to handle the maximum water flow for peak heating and cooling loads assuming supply and return temperatures shown in Figs. 3.5–3.8. Twelve pumps were used in each system, three in each of the space-heating, space-cooling, cooling-tower, and domestic hot-water loops. Each of the three pumps in each loop was sized to handle half of the design flow rate.

Heat pumps and chillers were sized in the same way — for the design cooling load. The computer printout included load-duration data for the chillers or heat pumps. The capacities were chosen so that the building — cooling load exceeded equipment capacity during 1% of the total cooling hours each year for the conventional reference buildings (for retrofit) and during 2-1/2% of the annual cooling hours for the energy-conserving (new) buildings. Two chillers or heat pumps were used for each installation, each with a capacity of one-half the design capacity.

The cooling towers were sized to reject the sum of the design building cooling load and the heat pump or chiller input electrical energy. Again,

load-duration data were displayed in the printout and used to optimize component size. As mentioned in Sect. 3.2, different types of cooling towers were used for the chiller and heat pump systems. An evaporative tower was used with the chiller systems, a dry cooling tower (outdoor coil) for the heat pump systems.

Gas boilers were used in all systems except the electrically driven heat pump system, which used an electric boiler. Although boiler sizes were quite different from one type of system to another, the sizing techniques were identical. The boilers were sized to supply any thermal energy not supplied by other sources. Load-duration data were used to select a boiler size adequate to ensure that the peak demand was met.

Fuel cells were sized to meet the maximum one-hour-average electrical load (including cooling loads and equipment loads) during a 5-year simulation period. When only 40-kW modules were assumed available, enough modules were installed to supply this peak demand. However, no fewer than two modules, nor more than six modules, were allowed for a single installation. If the design electrical load was greater than 240 kW, the building was not considered a candidate for a fuel cell-total-energy system.

For the four-unit [25, 40, 100, and 250 kW(e)] catalog case, the same constraints were applied to the number of modules per installation, but the unit sizes were mixed in such a way as to supply the peak electrical load at the lowest present-worth-life-cycle cost. For this case, buildings with peak electrical demands up to 1500 kW could be served by fuel cell total energy systems.

3.5 System Cost Estimation

Once component sizes were determined, it was possible to estimate component costs and hence system costs. All initial equipment costs, installation labor costs, and operation and maintenance (O&M) costs were determined for a 20-year period following installation for each system in each reference building in each region. These costs were expressed in mid-1976 dollars. The costs of all major components were summed, and the

sum was increased by a 25% contingency allowance. The O&M costs were summed separately, without a contingency allowance.

Component costs were obtained from published reports, trade magazines, and cost manuals, excepting fuel cell module costs, which were supplied by UTC. The cost algorithms for all components except fuel cell modules are displayed in Table 3.3. Fuel cell module costs are displayed in Table 3.4. Where references gave costs in other than mid-1976 dollars, the *Chemical Engineering Plant Cost Index* and the *Marshall and Swift Equipment Cost Index* were used to convert to mid-1976 dollars.

Table 3.3. Component cost algorithms

Item		Cost algorithm		Reference
Heat exchangers	$A^a \leqslant 10$ m^2	Material (M)	$1500\ A^{0.0886}$	K. M. Guthrie "Data and Techniques for Preliminary Capital Cost Estimating," *Chem. Eng.*, 76 (6), 114, March 24, 1969.
		Labor (L)	$490\ A^{0.0886}$	
		Annual O&M	2% of $M + L$	
	$A^a > 10$ m^2	Material (M)	$2300\ A^{0.63}$	
		Labor (L)	$770\ A^{0.63}$	
		Annual O&M	2% of $M + L$	
Pumps (Centrifugal)	Table by pump size			*1976 Building Cost File-Eastern Edition*, Construction Publishing Co., Inc., 1976.
Heat pumps		$C^b \leqslant 280$ kW(t)	$C^b > 280$ kW(t)	
	Material (M)	$680\ C^{0.5}$	$500\ C^{0.66}$	J. E. Christian, *Unitary Water-to-Air Heat Pumps*, ANL/CES/TE-77-9, October 1977.
	Labor (L)	$3.6\ C^{0.81}$	$7.2\ C^{0.81}$	
	Annual O&M	$22\ C^{0.77}$	$210\ C^{0.42}$	
Chillers (electric compressors)	Material (M)	$604\ C^{0.5}$	$390\ C^{0.66}$	J. E. Christian, *Central Cooling — Compressive Chillers*, ANL/CES/TE-78-2, March, 1978.
	Labor (L)	$3.6\ C^{0.81}$	$7.2\ C^{0.81}$	
	Annual O&M	$22\ C^{0.77}$	$210\ C^{0.42}$	
Cooling towers	Material (M)	\$17/kW(t)		Robert S. Means, *Building Construction Cost Data — 1976*, 1976.
	Labor (L)	\$3.6/kW(t)		
	Annual O&M	2% of $M + L$		
Gas, electric boilers	Various figures and equations			E. Farahan, *Central Heating — Package Boilers* ANL/CES/TE-77-6, May 1977.
Fuel cells	(See Table 3.4)			United Technologies Corporation.

[a] A = heat exchanger area.

[b] C = nominal space cooling capacity.

Table 3.4. Fuel cell costs [$/kW(e)][a]

Size, kW(e)	25	40	100	250
Installed cost[b]	471	426	390	378
Annual maintenance[c]	11	7	3	1
Stack replacement[d]	98	96	96	96
Fuel processing replacement[e]	77	77	77	77

[a]All estimates are based on a 10,000 unit/year (40 kW equivalent) production rate. Costs are in mid-1976 dollars.

[b]Installation labor cost is based on Connecticut rates.

[c]Maintenance costs assume one planned outage to change filters and one unplanned outage.

[d]Stack replacement occurs every five years. The cost omits labor cost; parts salvaged are assumed to cover labor cost. A $30/kW credit for salvaged catalyst is included.

[e]Fuel-processing equipment replacement occurs every ten years.

REFERENCES FOR SECTION 3

1. J. E. Christian, *Unitary Water-to-Air Heat Pumps*, ANL/CES/TE-77-9, Argonne National Laboratory, Evanston, Illinois, October 1977.

2. J. E. Christian, *Central Cooling-Compressive Chillers*, ANL/CES/TE-78-2, Argonne National Laboratory, Evanston, Illinois, March 1978.

4. EXTRAPOLATION OF REFERENCE BUILDING RESULTS TO OTHER BUILDING SIZES

The analysis discussed in Sect. 3 was completed only for the reference buildings. Even so, cost and performance data were required for 480 cases (10 regions, 6 building types, 2 levels of construction, 4 system types). For market analysis purposes, the building space inventory was classified by using 30 different size ranges. Because individual cost and performance evaluations for each size range would have been prohibitively time consuming and costly, techniques were developed to extrapolate the results from one size range to all other size ranges. Since different methods were used for scaling performance and cost data, the two extrapolations are discussed separately below.

4.1 Performance Data

For the market analysis, the following performance parameters were required: annual grid electricity use, annual natural gas use, the five-year-one-hour peak electrical demand, and the design building cooling load. As a result of performing simulations for the reference building and one additional size for the retail store and hospital, we concluded that the energy use in a particular type of building was approximately proportional to building floor area. The same result, which has been reported elsewhere,[1,2,3] indicates that internal building loads dominate over energy transfer through the building shell in determining heating and cooling requirements.

Figure 4.1(a) shows the installed cooling capacity and the installed fuel cell capacity (5-year peak electrical demand) as a function of building size. The squares and circles represent computer simulation results for the two building sizes, while the lines represent capacities predicted by linear extrapolation from the reference buildings.

Figure 4.1(b) shows the annual natural gas consumptions for the same examples. Again, the lines represent linear extrapolations based on the reference building sizes, while the squares and dots represent the computer simulation results.

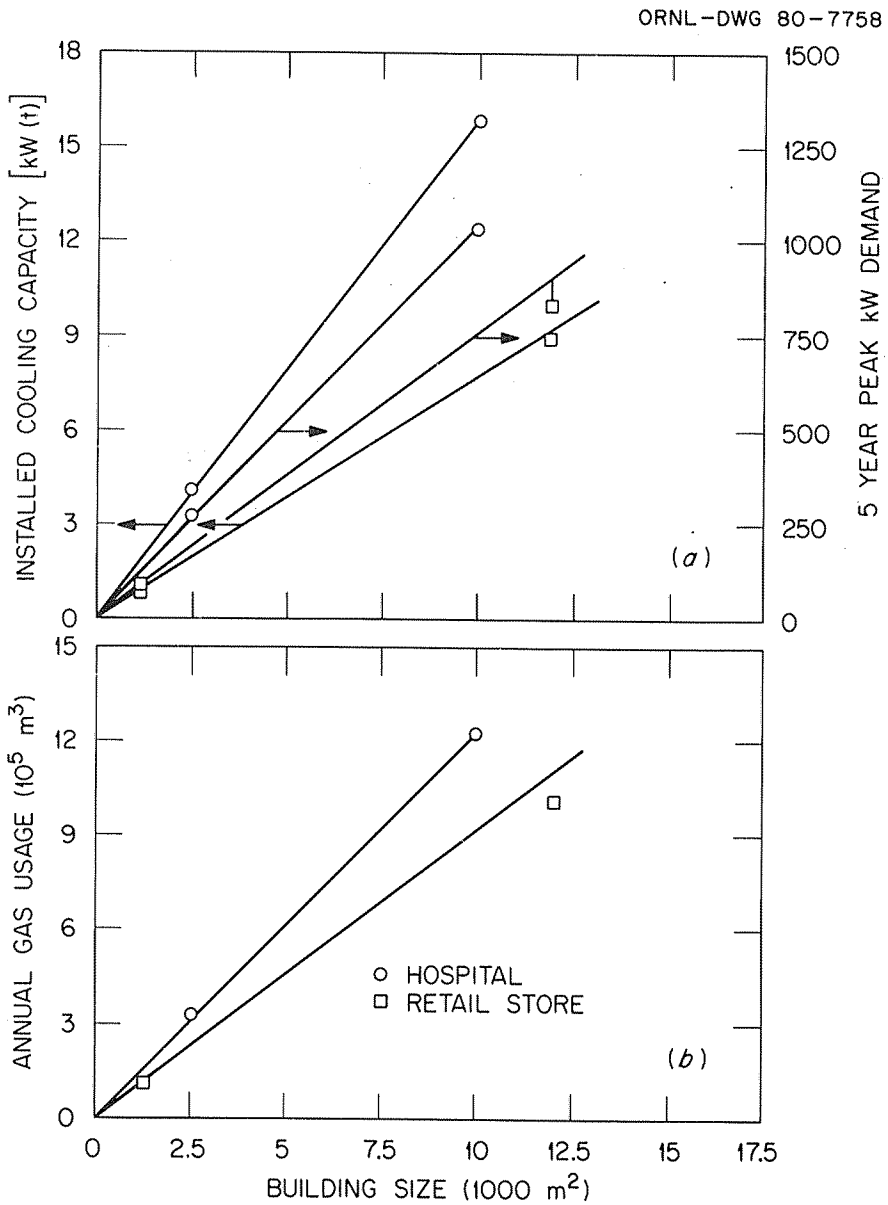

Fig. 4.1. Comparison of computer simulation results to linear extrapolation prediction.

The conclusion drawn from these figures was that the linear extrapolation approximation is reasonably accurate. As a result of this finding, the following relationship was developed:

$$Y_i = Y_{0_i}\left(\frac{X_i}{X_{0_i}}\right),$$

where Y_i is one of the energy use parameters listed above for a building whose floor area is X_i, and Y_{0_i} and X_{0_i} are the corresponding values for the reference building of type i.

4.2 Cost Data

The installation material cost, installation labor cost, and annual O&M cost were required for all systems. The fuel cell module costs were treated separately from the rest of the system costs.

Since the peak electrical load was assumed to be proportional to building floor area and the fuel cell systems were assumed to be isolated from the electrical grid, the installed fuel cell capacity also had to be proportional to building floor area. The method for estimating fuel cell module costs was to calculate first the peak electrical load as described in Sect. 4.1 and then to choose the combination of modules capable of supplying this load at lowest present-worth-life-cycle cost, neglecting fuel costs. For the 40-kW only case, the result is obvious; enough modules must be installed to meet the peak demand. For the four-unit-catalog case, the proper mixture of modules is not so obvious. The results of applying the lowest-present-cost criterion are illustrated in Table 4.1. The limitation to no more than six nor fewer than two modules restricted the range of building sizes for which the fuel cell total energy system could be used to buildings with up to 240-kW(e) peak demand for the 40-kW only case, and up to 1500-kW peak demand for the four-unit catalog case.

For the non-fuel cell portion of the systems, the costs clearly cannot scale linearly with floor area if energy demands are proportional to floor area, because the major system component costs all scale nonlinearly with component size. In general the cost of each major component can be related to component size by an equation of the form:

$$C = AS^B ,$$

where C is the cost of a component of size S, and A and B are parameters characteristic of each component. From the cost estimation for each

Table 4.1. Fuel cell size selection for given peak electrical demand

Peak load (kW)	Number of fuel cells			
	25 kW	40 kW	100 kW	250 kW
10	2	0	0	0
100	1	2	0	0
200	0	0	2	0
300	0	0	3	0
400	0	4	0	1
500	0	0	0	2
600	0	0	1	2
700	0	0	2	2
800	0	0	3	2
900	0	0	4	2
1000	0	0	0	4
1100	0	0	1	4
1200	0	0	2	4
1300	0	0	1	5
1400	0	0	0	6
1500	0	0	0	6

reference building in each region for each system, A and B were known for each major component, and the fraction of total system cost attributed to each component was known. Inspection of component costs for the reference building systems revealed that the primary determinant of system component sizes, and hence costs, was the design building cooling load, which was assumed to be proportional to building size. Therefore, a scaling law for system cost as a function of design cooling load proved adequate.

The scaling law for system cost as a function of design cooling load was developed as follows. The system cost is a sum of individual component costs,

$$C_s = C_1 + C_2 + \ldots + C_N$$

for an N-component system. If L is the design cooling load, then

$$C_s = AL^B = A_1L^{B_1} + A_2L^{B_2} + \ldots + A_NL^{B_N}$$

The change in the system cost with a change in L is:

$$\left(\frac{dC_s}{dL}\right) = ABL^{B-1} = A_1B_1L^{B_1-1} + A_2B_2L^{B_2-1} + \ldots + A_NB_NL^{B_N-1}$$

or

$$BC_s = B_1C_1 + B_2C_2 + \ldots + B_NC_N$$

where

$$C_N = A_NL^{B_N} ,$$

or

$$B = B_1 \frac{C_1}{C_s} + B_2 \frac{C_2}{C_s} + \ldots + B_N \frac{C_N}{C_s} .$$

To the extent that the fraction of total system costs contributed by each item is a constant as a function of design cooling load, B can be determined by using the values of C_N/C_s for the reference system to weight the individual component exponents. Although this is not rigorously correct, this approximation results in only about a 10% error in system costs over an order of magnitude variation in design cooling load.

Because the scaling laws are different for reciprocating and centrifugal cooling equipment, different system scaling laws were developed for the regimes in which each type of system would be used [reciprocating for $L \leqslant 560$ kW(t) (160 tons), centrifugal for $L > 560$ kW(t) (160 tons)]. Similar equations were developed for installation material costs, installa-

tion labor costs, and annual operating and maintenance costs. The form of the final scaling equation was:

$$C_s = C_{ref} \left(\frac{L_s}{L_{ref}} \right)^B$$

where C_s is the cost of the system for a building with design cooling load, L_s, and B is the derived exponent. C_{ref} and L_{ref} are the system cost and design cooling load for the reference building. The exponents developed are displayed in Table 4.2.

Table 4.2. System cost scaling exponents

	Exponent (B)	
	$L_s \leqslant 560$ kW(t)	$L_s > 560$ kW(t)
Installation materials cost	0.66	0.74
Installation labor cost	0.81	0.81
Annual O&M cost	0.77	0.77

REFERENCES FOR SECTION 4

1. Ray Harrigan, Sandia Laboratories, private communication, August 1978 (in reference to work done by Atomics International Division of Rockwell International on Commercial Applications of Solar Total Energy Systems).

2. *Venture Analysis Case Study for On-Site Fuel Cell Energy Systems*, FCR-0783, United Technologies Corporation, Power Systems Division, July 1978.

3. P. Bolan and J. W. Staniunas, "Fuel Cell Applications in Residential and Commercial Buildings," Paper presented at the July 1978 National Fuel Cell Seminar, San Francisco, California.

5. RECOMMENDATIONS TO FUTURE ANALYSTS

As one of the major reasons for writing this report is to aid those who wish to perform similar analyses in the future, it should be useful, not only to document our methods and data sources, but also to identify those areas where improvements could be made in the analysis. Most recommendations apply to analyses of other total-energy systems as well as to the fuel cell total-energy systems. Most of the recommendations would lead to significant efforts, which is the reason they appear here as recommendations rather than being incorporated in this study.

5.1 Building Retrofit Costs

Our study neglected building retrofit costs on the grounds that all systems were central systems relying on hydronic loops for distribution of thermal energy and that retrofit costs would be about the same for all systems; hence, the relative economics of the systems, which determined market penetration, would not be affected by this cost. Many existing buildings have steam thermal-distribution systems which are unsuitable for direct use to carry hot or chilled water because of the small size of the condensate return line. The costs of retrofitting the building with an hydronic loop compatible with central systems would be quite high; a recent study[1] indicates that costs may be $40/kW(t) or more. Therefore, a central boiler for heating combined with unitary, electric air conditioning equipment dispersed throughout the building would be a strong competitor to the central systems. We suggest that this option be included in future analyses. The effect of including this option and considering retrofit costs would be to decrease the market penetration compared to our projections.

5.2 Alternative Modes of Operation

The fuel cell total-energy systems considered in this study were isolated from the electrical grid. This required that the fuel cell modules be capable of supplying the entire electrical load and have a reliability approximately equal to that of the grid. If connection to the electrical grid were allowed, several alternative modes of operation might be used.

The grid might be used for backup and to supply peak electrical loads, allowing a reduction in installed fuel cell capacity. This would help in two ways: first, the load factor of the fuel cell modules could be increased by choosing an installed capacity somewhat closer to the average building load rather than the peak load. Second, the requirement for a minimum of two modules per installation might be eliminated, allowing the fuel cell system to be installed in smaller buildings and increasing the potential market. Whether these changes would improve the economic attractiveness of fuel cell total-energy systems would depend on the peaking or backup charges.

The possibility of interchange of electrical power with the grid also opens the possibility of operating the fuel cell to follow the building thermal demands. The economics of this option depend on the structure of building thermal and electrical demands and on the relevant rates for purchase and sell-back of electrical power.

Time-of-day pricing of electricity is being considered by many electrical utilities. Particular utility load structures in conjunction with the relevant pricing structure might make it economically attractive to add thermal storage to the fuel cell system and operate the fuel cell system in a mode most compatible with the utility.

5.3 Energy Demand Variations

For the purposes of this study, we considered two types of construction and operation for each building, one for existing building (retrofit), and one for new construction. A single set of construction and operating characteristics was applied to each building type and assumed to apply to all buildings within that category. This is a significant simplification of reality, as both construction quality and operating characteristics will vary greatly in practice. These characteristics also would be expected to change over a period of time, both for existing buildings and new buildings, as fuel prices increase and conservation measures are more widely implemented.

These observations suggest two areas for improvement over our method of analysis. First, if adequate building data were available for existing

buildings, it would be of interest to examine the effect on the potential market of variations in energy demand profiles in buildings. United Technologies approached this problem in their venture analysis study[2] by developing distributions of important building parameters such as load factor and T/E ratio and by using a Monte Carlo technique to select various combinations of these parameters for use in simulating different building characteristics. The result was a larger projected market penetration of fuel cell total-energy systems than that which resulted from our study. Second, there generally will be a choice between using a more energy-efficient system such as a fuel cell total energy system and modifying the building thermal integrity, improving the performance of existing systems, or modifying the use patterns of buildings to conserve energy. Examination of the economic tradeoffs between implementation of such conservation measures and the installation of more efficient systems might prove quite interesting.

5.4 Additional "Fine-Tuning" Improvements

Several additional, relatively minor improvements could be made in our approach. Such improvements probably would not result in significant changes in the results; in fact, the effects of these changes may be insignificant compared to probable changes in such items as fuel cell module costs and future fuel prices. Some examples of potential improvements are given below.

Our computer program handles only single-zone building heating and cooling systems. Many large buildings, such as office buildings and hospitals, are frequently divided into several zones with individually controlled systems. For such cases, our program will be somewhat inaccurate. A more sophisticated computer program would be required to predict the energy requirements accurately for these cases.

Regional variations in such costs as operating and maintenance costs, materials costs, labor costs, and system delivery costs were not considered in this study. These variations would affect the comparative costs to the extent that the cost distributions (labor, materials, fuel) were different for the different systems.

Some building types actually encompass a wide variety of types of users. For example, the retail store category would include grocery stores, service stations, department stores, shopping centers, and others. Some of these users would find fuel cell total energy systems more attractive than our "typical" retail store model, while others would find it less attractive. Similar statements can be made for the other building types; finer subdivisions of building types would have allowed us to examine the importance of this effect.

REFERENCES FOR SECTION 5

1. Burns and Roe, Inc., *Urban Area District Energy System Study*, Draft report W. O. 3251-06, undated.

2. *Venture Analysis Case Study for On-Site Fuel Cell Energy Systems*, FCR-0783, United Technologies Corporation, Power Systems Division, July 1978.

Appendix A

REFERENCE BUILDING PHYSICAL CHARACTERISTICS AND LOAD PROFILES

Appendix A

REFERENCE BUILDING PHYSICAL CHARACTERISTICS AND LOAD PROFILES

The tables in this appendix present the physical characteristics and hourly load profiles assumed for five reference buildings discussed in the text. Data for the multifamily residence are not presented here, as they were presented in the text. Table A.1 presents the essential characteristics and the peak load values for all five buildings both in their original states and after energy-conservation measures have been taken. Tables A.2 through A.6 present the respective hourly load profiles for the office building, retail store, motel, school, and hospital. Except in the cases of the motel and school, the building electrical load profiles are broken down according to the classes of usage in the building.

Table A.1. Building structural and energy-related characteristics[a]

	Office building		Retail store		Motel			School		Hospital		
	Original	Altered	Original	Altered	Original	Altered		Original	Altered	Original	Altered	
Basic design		Same		Same		Same			Same		Same	
Stories	3		1		2			1		4		
Ceiling height, m	3.7		5.6		2.7			4.3		4.0		
Total areas, m^2		Same		Same		Same						
Floor	3762		1120		3720			3720	Same	9290	Same	
Wall	1310		703		702			1040	1060	2536	2648	
Glass	482		74		301			260	241	845	733	
Roof	1254		1120		1860			3720	Same	2322	Same	
U values, $W/m^2 \cdot K$												
Wall	1.31	0.95	1.65	1.14	1.76	1.19[b]	0.57[c]	0.57	Same	1.36	1.14[b]	0.57[c]
Glass	5.22	3.69	6.42	6.42	6.42	3.41	3.41	6.42	Same	6.42	Same	Same
Roof	0.784	0.42	0.80	0.45	1.08	0.28	0.28	0.80	0.45	1.47	0.40	0.40
Infiltration + ventilation, air changes per hour	1.75	1.0	0.6	Same	1.67	0.89		2.0	1.36	2.92	2.31	
Indoor design conditions,[d] °C												
Cooling	23	26	23	26	23	26		23	26	23	23	
Heating	23	22	23	22	23	22		23	22	23	23	
Peak occupancy	253	Same	60	Same	160	Same		500	Same	560	Same	
Domestic hot water		Same		Same		Same			Same		Same	
Temperature, °C	60				60			60		60		
Demand, liter/h	389		0.0		756			10130		2196		
Internal electricity demand, kW		Same		Same		Same						
Peak divesified load	194		54.3		50			160	120			
Lights	153[e]		34.6							175[f]	157	
Equipment			15[g], 4.7[h]							22.4	Same	
Elevators	41									92.4	Same	

[a] Altered characteristics show the effects of energy-conservation measures.

[b] Values are for Atlanta, Dallas, San Diego, and Seattle.

[c] Values are for Boston, New York, Washington, D.C., Chicago, Kansas City, and Denver.

[d] Dry-bulb temperatures with ±0.8°C dead band, humidity controlled to 50% in summer.

[e] Lights and equipment combined.

[f] Internal electricity usage only; no heating, ventilation, or air conditioning requirements included.

[g] Inside equipment.

[h] Outside equipment.

Table A.2. Hourly building load and demand: office building

Hour	Occupancy peak = 253 (individuals per 1000 m^2)		Domestic hot water peak demand = 389 liter/hr (percent of peak)		Electricity peak load = 194 kW			
					Lights and equipment peak load = 153.0 kW (percent of peak)		Elevator peak load = 41 kW (percent of peak)	
	Weekday	Weekend	Weekday	Weekend	Weekday	Weekend	Weekday	Weekend
1	2.04	2.04	0.0	0.0	3.0	3.0	0.0	0.0
2	2.04	2.04	0.0	0.0	3.0	3.0	0.0	0.0
3	2.04	2.04	0.0	0.0	3.0	3.0	0.0	0.0
4	2.04	2.04	0.0	0.0	3.0	3.0	0.0	0.0
5	2.04	2.04	0.0	0.0	3.0	3.0	0.0	0.0
6	2.04	2.04	0.0	0.0	3.0	3.0	0.0	0.0
7	2.04	2.04	0.0	0.0	3.0	3.0	10.0	0.0
8	2.04	2.04	0.0	0.0	3.0	3.0	20.0	0.0
9	67.2	2.04	55.0	55.0	98.0	3.0	60.0	0.0
10	67.2	2.04	55.0	55.0	98.0	3.0	10.0	0.0
11	67.2	2.04	55.0	55.0	98.0	3.0	10.0	0.0
12	67.2	2.04	55.0	55.0	98.0	3.0	30.0	0.0
13	67.2	2.04	90.0	90.0	98.0	3.0	20.0	0.0
14	67.2	2.04	60.0	60.0	98.0	3.0	10.0	0.0
15	67.2	2.04	80.0	80.0	98.0	3.0	10.0	0.0
16	67.2	2.04	70.0	70.0	98.0	3.0	10.0	0.0
17	67.2	2.04	75.0	75.0	98.0	3.0	20.0	0.0
18	2.04	2.04	30.0	30.0	3.0	3.0	50.0	0.0
19	2.04	2.04	30.0	30.0	3.0	3.0	20.0	0.0
20	2.04	2.04	40.0	40.0	3.0	3.0	10.0	0.0
21	2.04	2.04	50.0	50.0	3.0	3.0	10.0	0.0
22	2.04	2.04	0.0	0.0	3.0	3.0	10.0	0.0
23	2.04	2.04	0.0	0.0	3.0	3.0	0.0	0.0
24	2.04	2.04	0.0	0.0	3.0	3.0	0.0	0.0

Table A.3. Hourly building load and demand: retail store[a]

Hour	Occupancy peak = 60 (individuals per 1000 m^2)		Electricity peak load = 54.3 kW					
			lights peak load = 34.6 kW (percent of peak)		Inside equipment peak load = 15 kW (percent of peak)		Outside equipment peak load = 4.7 kW (percent of peak)	
	Weekday	Weekend	Weekday	Weekend	Weekday	Weekend	Weekday	Weekend
1	0.0	0.0	3.0	3.0	25.0	25.0	10.0	10.0
2	0.0	0.0	3.0	3.0	25.0	25.0	10.0	10.0
3	0.0	0.0	2.0	2.0	25.0	25.0	10.0	10.0
4	0.0	0.0	2.0	2.0	25.0	25.0	10.0	10.0
5	0.0	0.0	5.0	5.0	25.0	25.0	10.0	10.0
6	0.0	0.0	16.0	16.0	25.0	25.0	10.0	10.0
7	0.0	0.0	16.0	16.0	15.0	15.0	8.0	8.0
8	0.0	0.0	20.0	20.0	15.0	15.0	19.0	19.0
9	2.69	2.69	42.0	42.0	25.0	25.0	29.0	29.0
10	5.38	5.38	65.0	65.0	50.0	50.0	57.0	57.0
11	10.8	32.2	89.0	89.0	50.0	50.0	87.0	87.0
12	10.8	32.2	88.0	88.0	50.0	50.0	87.0	87.0
13	10.8	53.7	92.0	92.0	50.0	50.0	87.0	87.0
14	16.0	53.7	88.0	88.0	50.0	50.0	87.0	87.0
15	16.0	53.7	87.0	87.0	50.0	50.0	87.0	87.0
16	16.0	32.2	87.0	87.0	50.0	50.0	87.0	87.0
17	10.8	32.2	88.0	88.0	70.0	70.0	92.0	92.0
18	10.8	5.38	98.0	98.0	70.0	70.0	92.0	92.0
19	10.8	2.69	97.0	97.0	10.0	70.0	10.0	10.0
20	5.38	0.0	97.0	97.0	10.0	70.0	70.0	70.0
21	2.69	0.0	96.0	96.0	10.0	70.0	48.0	48.0
22	0.0	0.0	75.0	75.0	50.0	50.0	48.0	48.0
23	0.0	0.0	8.0	8.0	25.0	25.0	21.0	21.0
24	0.0	0.0	3.0	3.0	25.0	25.0	10.0	10.0

[a]Domestic hot water demand assumed to be zero.

Table A.4. Hourly building loads and demand: motel

Hour	Occupancy peak = 160 (individuals per 1000 m^2)		Domestic hot water peak demand = 756 liter/h (percent of peak)		Electricity peak load = 50 kW (percent of peak)	
	Weekday	Weekend	Weekday	Weekend	Weekday	Weekend
1	43.0	43.0	13.0	13.0	79.0	79.0
2	43.0	43.0	10.0	10.0	78.0	78.0
3	43.0	43.0	8.0	8.0	72.0	72.0
4	43.0	43.0	0.0	0.0	70.0	70.0
5	43.0	43.0	0.0	0.0	70.0	70.0
6	43.0	43.0	20.0	20.0	67.0	67.0
7	34.4	34.4	63.0	63.0	66.0	66.0
8	21.5	21.5	10.0	10.0	66.0	66.0
9	4.3	43.0	70.0	70.0	73.0	73.0
10	4.3	4.3	48.0	48.0	79.0	79.0
11	4.3	4.3	40.0	40.0	79.0	79.0
12	4.3	4.3	28.0	28.0	78.0	78.0
13	8.6	8.6	30.0	30.0	80.0	80.0
14	8.6	8.6	23.0	23.0	78.0	78.0
15	4.3	4.3	20.0	20.0	78.0	78.0
16	4.3	4.3	13.0	13.0	77.0	77.0
17	17.2	17.2	13.0	13.0	76.0	76.0
18	17.2	17.2	25.0	25.0	71.0	71.0
19	17.2	17.2	30.0	30.0	92.0	92.0
20	25.8	25.8	28.0	28.0	95.0	95.0
21	34.4	34.4	25.0	25.0	94.0	94.0
22	43.0	43.0	28.0	28.0	95.0	95.0
23	43.0	43.0	25.0	25.0	97.0	97.0
24	43.0	43.0	23.0	23.0	88.0	88.0

Table A.5. Hourly building load and demand: school

Hour	Occupancy peak = 500 (individuals per 1000 m^2)		Domestic hot water peak demand = 10130 liter/h (percent of peak)		Electricity peak load = 160 kW (percent of peak)	
	Weekday	Weekend	Weekday	Weekend	Weekday	Weekend
1	0.0	0.0	8.0	8.0	10.0	10.0
2	0.0	0.0	12.0	8.0	10.0	10.0
3	0.0	0.0	8.0	8.0	10.0	10.0
4	0.0	0.0	0.0	8.0	10.0	10.0
5	0.0	0.0	0.0	8.0	10.0	10.0
6	0.0	0.0	0.0	8.0	10.0	10.0
7	0.0	0.0	0.0	8.0	10.0	10.0
8	13.3	0.0	28.0	8.0	31.0	10.0
9	133.0	0.0	52.0	8.0	68.0	10.0
10	133.0	0.0	56.0	8.0	86.0	10.0
11	133.0	0.0	70.0	8.0	89.0	10.0
12	107.0	0.0	82.0	8.0	89.0	10.0
13	26.7	0.0	97.0	8.0	81.0	10.0
14	133.0	0.0	10.0	8.0	90.0	10.0
15	133.0	0.0	52.0	8.0	89.0	10.0
16	40.0	0.0	49.0	8.0	91.0	10.0
17	13.3	0.0	65.0	8.0	52.0	10.0
18	13.3	0.0	82.0	8.0	36.0	10.0
19	13.3	0.0	33.0	8.0	29.0	10.0
20	53.3	0.0	25.0	8.0	21.0	10.0
21	53.3	0.0	25.0	8.0	21.0	10.0
22	26.7	0.0	20.0	8.0	21.0	10.0
23	0.0	0.0	12.0	8.0	16.0	10.0
24	0.0	0.0	8.0	8.0	15.0	10.0

Table A.6. Hourly building load and demand: hospital

Hour	Occupancy peak = 560 (individuals per 1000 m^2)		Domestic hot water peak demand = 2196 liter/h (percent of peak)		Electricity: Lights peak load = 175 kW (percent of peak)		Electricity: Equipment peak load = 22.4 kW (percent of peak)		Electricity: Elevators peak load = 92.4 kW (percent of peak)	
	Weekday	Weekend	Weekday	Weekend	Weekday	Weekend	Weekday	Weekend	Weekday	Weekend
1	19.1	19.1	0.0	0.0	28.0	28.0	28.0	28.0	0.0	0.0
2	19.1	19.1	1.0	1.0	28.0	28.0	28.0	28.0	0.0	0.0
3	19.1	19.1	2.0	2.0	28.0	28.0	28.0	28.0	0.0	0.0
4	19.1	19.1	4.0	4.0	28.0	28.0	28.0	28.0	0.0	0.0
5	19.1	19.1	6.0	6.0	28.0	28.0	28.0	28.0	0.0	0.0
6	19.1	19.1	18.0	18.0	28.0	28.0	28.0	28.0	0.0	0.0
7	23.8	23.8	41.0	41.0	33.0	33.0	33.0	33.0	8.0	8.0
8	37.2	29.8	47.0	47.0	40.0	40.0	40.0	40.0	20.0	20.0
9	53.2	33.4	100.0	100.0	65.0	50.0	65.0	50.0	20.0	20.0
10	53.2	33.4	82.0	82.0	90.0	50.0	90.0	50.0	14.0	14.0
11	56.5	36.9	74.0	74.0	95.0	55.0	95.0	55.0	32.0	32.0
12	60.3	40.5	86.0	86.0	100.0	60.0	100.0	60.0	24.0	24.0
13	60.3	40.5	93.0	93.0	100.0	60.0	100.0	60.0	14.0	14.0
14	60.3	40.5	75.0	75.0	100.0	60.0	100.0	60.0	20.0	20.0
15	60.3	40.5	64.0	64.0	100.0	60.0	100.0	60.0	16.0	16.0
16	60.3	40.5	64.0	64.0	100.0	60.0	100.0	60.0	40.0	40.0
17	51.8	34.4	76.0	76.0	85.0	50.0	85.0	50.0	44.0	44.0
18	46.8	34.4	19.0	19.0	75.0	50.0	75.0	50.0	12.0	12.0
19	41.9	33.3	11.0	11.0	65.0	48.0	65.0	48.0	8.0	8.0
20	38.3	29.7	10.0	10.0	70.0	43.0	70.0	43.0	16.0	16.0
21	38.3	29.7	6.0	6.0	70.0	43.0	70.0	43.0	16.0	16.0
22	31.2	31.2	5.0	5.0	50.0	33.0	50.0	33.0	0.0	0.0
23	31.2	22.6	5.0	5.0	50.0	33.0	50.0	33.0	0.0	0.0
24	31.2	22.6	0.0	0.0	50.0	33.0	50.0	33.0	0.0	0.0

Appendix B

EFFECTS ON REFERENCE MULTIFAMILY RESIDENCE OF IMPLEMENTING IMPROVED ENERGY MANAGEMENT PRACTICES

Appendix B

EFFECTS ON REFERENCE MULTIFAMILY RESIDENCE OF IMPLEMENTING IMPROVED ENERGY MANAGEMENT PRACTICES

Building energy-usage data compiled by United Technologies suggests that our reference building selection has resulted in lower T/E* ratios than the median T/E for the existing building stock. The United Technologies data is based on actual metered electric and gas usages of a number of buildings scattered across the country taken in the 1972-1977 time period.

Figure B.1 shows the distribution of T/E ratios for a United Technologies sample of existing apartments in DOE Region 5 (Chicago). The data point labeled "ORNL" represents the T/E ratio for the reference multi-family residence (retrofit) in this region.

On the basis of measured T/E ratios from buildings for which energy audits have been conducted and cost-effective energy-conservation measures enacted, we believe that UTC building data includes some buildings that are not operated in a cost-effective manner. Most energy conservation modifications which are easily applied to existing buildings reduce the T/E ratio.

For example, in 1974 the Committee on Energy Conservation of the National Petroleum Council[1] examined the question of potential energy conservation for the U.S. residential-commercial building sector. They identified conservation measures requiring no capital investment, small investments (e.g. weatherstripping), substantial investment (building modifications), and totally new construction. Figure B.2 depicts the effect on T/E of implementing those energy conservation measures which require little or no capital investment. The base case is assumed to represent the median T/E ratio of $\sim$6 found by the UTC building energy-usage data file. As conservation measures are deployed as shown in Fig. B.2, the assumed T/E ratio drops from 6 to 3.3; however, electricity

---

*The T/E ratio as used here is the ratio of the energy content of metered natural gas use to the energy content of the metered electricity, assuming that the conventional central-chiller-central-boiler system is installed in the building.

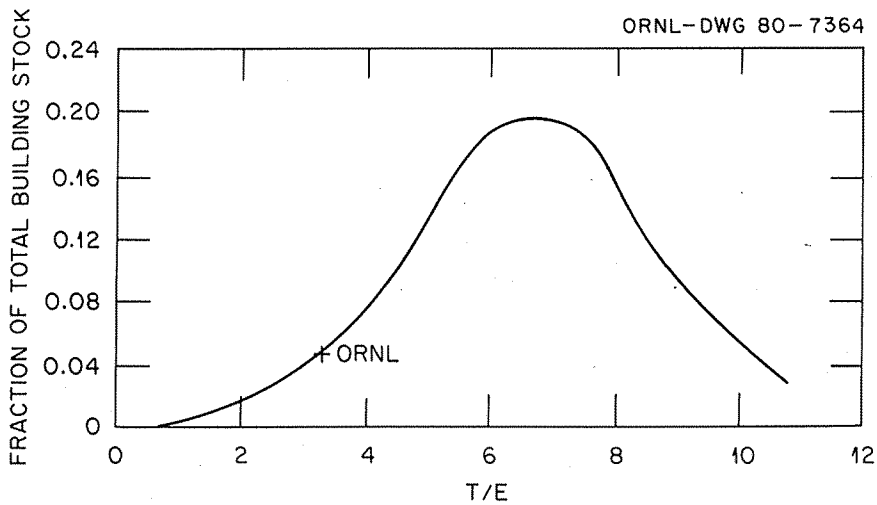

Fig. B.1. Building T/E distribution for multifamily residences in DOE Region 5 as estimated by United Technologies Corporation.

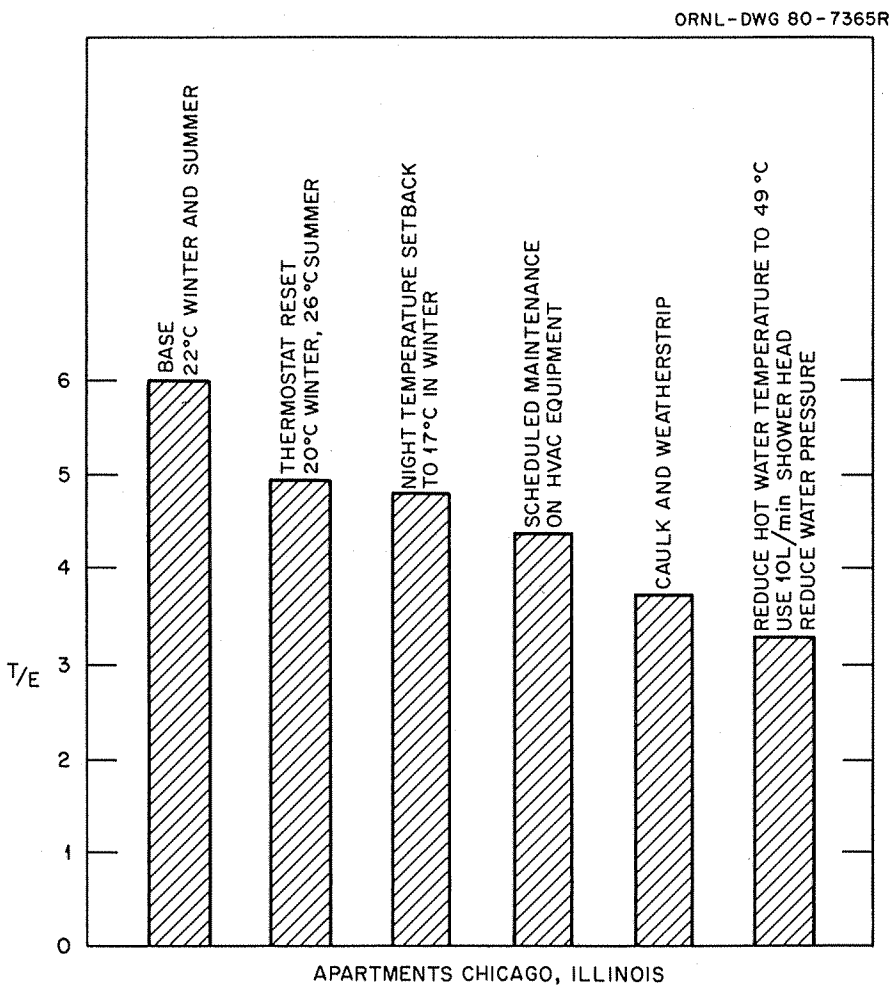

Fig. B.2. Changes in T/E with energy conservation practices.

consumption (for lighting, etc.) was not reduced. If electricity consumption were also reduced, the reduction in the T/E ratio would be somewhat smaller.

We feel that fuel cells must be able to sell in buildings that are operated in an energy-conserving manner. Therefore, selection of buildings with lower than the existing median T/E ratio is desirable, since not all cost effective energy conserving measures have been undertaken in high T/E buildings. Retrofitting existing buildings with fuel cells should be done in conjunction with cost effective energy conservation measures — not as a substitute for them.

REFERENCE

1. *Potential for Energy Conservation in the United States: 1974-1978 Residential/Commercial*, National Petroleum Council, September 10, 1974.

Appendix C

COST AND PERFORMANCE DATA USED AS INPUT TO RPA MARKET MODEL PROGRAM

Appendix C

COST AND PERFORMANCE DATA USED AS INPUT TO RPA MARKET MODEL PROGRAM

Key for Segment Identification Parameters

REGION (REG)

1. New England
2. New York, New Jersey
3. Middle Atlantic
4. South Atlantic
5. Midwest
6. Southwest
7. Central
8. North Central
9. West
10. Northwest

Building Type (B.T.)

1. Offices
2. Retail Stores
3. Hotels and Motels
4. Schools
5. Colleges
6. Hospitals
7. Public Administration
8. Other Institutional
9. Multifamily Residential

Level of Construction (N.R.)

1. ASHRAE 90 (New)
2. Conventional (Retrofit)

System Type (Sys)

1. Fuel Cell-Heat Pump
2. Fuel Cell-Boiler-Chiller
3. Boiler-Chiller
4. Heat Pump

ORNL-DWG 78-17393

Region REG.	Building Type B.T.	Insulation Level N.R.	System SYS.	CAPITAL COST $/SQ FT	INSTALLATN COST $/SQ FT	ANNL O+M COST $/SQ FT	ANNL ELEC USE KWH/SQ FT	ANNL GAS USE CU FT/SQ FT	PEAK ELEC REQMT KW/SQ FT	DESGN COOL LOAD BTU/SQ FT	TYPICL BLD SIZE SQ FT
1	1	1	1	2.300	0.410	0.11	0.0	244.00	0.0077	25.60	40500.
1	1	1	2	1.360	0.440	0.09	0.0	267.00	0.0074	25.60	40500.
1	1	1	3	1.100	0.300	0.08	17.00	48.70	0.0074	25.60	40500.
1	1	1	4	1.990	0.320	0.10	24.60	0.0	0.0087	25.60	40500.
1	1	2	1	2.780	0.490	0.14	0.0	288.00	0.0095	39.50	40500.
1	1	2	2	1.830	0.530	0.11	0.0	343.00	0.0089	39.50	40500.
1	1	2	3	1.390	0.370	0.10	17.30	108.70	0.0089	39.50	40500.
1	1	2	4	2.430	0.390	0.13	30.70	0.0	0.0117	39.50	40500.
1	2	1	1	3.420	0.450	0.13	0.0	282.00	0.0070	19.70	12060.
1	2	1	2	1.930	0.460	0.10	0.0	281.00	0.0069	19.70	12060.
1	2	1	3	1.740	0.340	0.10	12.10	24.60	0.0069	19.70	12060.
1	2	1	4	3.280	0.390	0.13	26.40	0.0	0.0057	19.70	12060.
1	2	2	1	3.900	0.470	0.17	0.0	323.00	0.0080	28.20	12060.
1	2	2	2	2.260	0.470	0.13	0.0	340.00	0.0078	28.20	12060.
1	2	2	3	1.980	0.430	0.11	25.70	52.60	0.0078	28.20	12060.
1	2	2	4	3.750	0.450	0.16	30.20	0.0	0.0078	28.20	12060.
1	3	1	1	1.730	0.330	0.07	0.0	137.00	0.0030	14.50	40000.
1	3	1	2	0.990	0.320	0.05	0.0	144.00	0.0031	14.50	40000.
1	3	1	3	0.820	0.250	0.05	13.00	39.80	0.0031	14.50	40000.
1	3	1	4	1.590	0.270	0.07	17.10	0.0	0.0066	14.50	40000.
1	3	2	1	2.210	0.340	0.11	0.0	194.00	0.0043	25.00	40000.
1	3	2	2	1.390	0.370	0.09	0.0	238.00	0.0039	25.00	40000.
1	3	2	3	1.120	0.320	0.08	13.50	107.80	0.0039	25.00	40000.
1	3	2	4	1.970	0.320	0.11	23.70	0.0	0.0088	25.00	40000.
1	4	1	1	4.000	1.110	0.18	0.0	422.10	0.0076	43.00	40000.
1	4	1	2	4.470	1.130	0.18	0.0	482.40	0.0075	43.00	40000.
1	4	1	3	2.890	0.480	0.15	14.90	322.00	0.0075	43.00	40000.
1	4	1	4	2.690	0.790	0.16	84.80	0.0	0.0138	43.00	40000.
1	4	2	1	5.340	1.270	0.22	0.0	459.90	0.0114	75.00	40000.
1	4	2	2	5.440	1.330	0.22	0.0	567.00	0.0110	75.00	40000.
1	4	2	3	3.790	0.760	0.19	18.80	378.30	0.0110	75.00	40000.
1	4	2	4	3.950	0.940	0.19	95.80	0.0	0.0158	75.00	40000.
1	5	1	1	4.000	1.110	0.18	0.0	469.00	0.0076	43.00	40000.
1	5	1	2	4.470	1.130	0.18	0.0	536.00	0.0075	43.00	40000.
1	5	1	3	2.890	0.480	0.15	14.90	322.00	0.0075	43.00	40000.
1	5	1	4	2.690	0.790	0.16	84.80	0.0	0.0138	43.00	40000.
1	5	2	1	5.340	1.270	0.22	0.0	511.00	0.0114	75.00	40000.
1	5	2	2	5.440	1.330	0.22	0.0	630.00	0.0110	75.00	40000.
1	5	2	3	3.790	0.760	0.19	18.80	378.30	0.0110	75.00	40000.
1	5	2	4	3.950	0.940	0.19	95.80	0.0	0.0158	75.00	40000.
1	6	1	1	2.090	0.410	0.09	0.0	355.00	0.0089	40.00	100000.
1	6	1	2	1.860	0.430	0.09	0.0	341.00	0.0077	40.00	100000.
1	6	1	3	1.500	0.510	0.09	26.60	129.10	0.0077	40.00	100000.
1	6	1	4	1.920	0.350	0.09	36.70	0.0	0.0136	40.00	100000.
1	6	2	1	2.490	0.490	0.10	0.0	407.00	0.0104	56.00	100000.
1	6	2	2	2.280	0.530	0.11	0.0	493.00	0.0097	56.00	100000.
1	6	2	3	2.000	0.430	0.10	28.00	196.00	0.0097	56.00	100000.
1	6	2	4	2.290	0.410	0.10	42.70	0.0	0.0173	56.00	100000.

Fuel cell/Chiller
Elect. Chiller

ORNL-DWG 78-17394

REG.	B.T.	N.F.	SYS.	CAPITAL COST $/SQ FT	INSTALLATN COST $/SQ FT	ANNL O+M COST $/SQ FT	ANNL ELEC USE KWH/SQ FT	ANNL GAS USE CU FT/SQ FT	PEAK ELEC REQMT KW/SQ FT	DESGN COOL LOAD BTU/SQ FT	TYPICL BLD SIZE SQ FT
1	7	1	1	2.300	0.410	0.11	0.0	244.00	0.0077	25.60	40500.
1	7	1	2	1.360	0.440	0.09	0.0	267.00	0.0074	25.60	40500.
1	7	1	3	1.100	0.300	0.08	17.00	48.70	0.0074	25.60	40500.
1	7	1	4	1.990	0.320	0.10	24.60	0.0	0.0087	25.60	40500.
1	7	2	1	2.780	0.490	0.14	0.0	288.00	0.0095	39.50	40500.
1	7	2	2	1.830	0.530	0.11	0.0	343.00	0.0089	39.50	40500.
1	7	2	3	1.390	0.370	0.10	17.30	108.70	0.0089	39.50	40500.
1	7	2	4	2.430	0.390	0.13	30.70	0.0	0.0117	39.50	40500.
1	8	1	1	2.300	0.410	0.11	0.0	244.00	0.0077	25.60	40500.
1	8	1	2	1.360	0.440	0.09	0.0	267.00	0.0074	25.60	40500.
1	8	1	3	1.100	0.300	0.08	17.00	48.70	0.0074	25.60	40500.
1	8	1	4	1.990	0.320	0.10	24.60	0.0	0.0087	25.60	40500.
1	8	2	1	2.780	0.490	0.14	0.0	288.00	0.0095	39.50	40500.
1	8	2	2	1.830	0.530	0.11	0.0	343.00	0.0089	39.50	40500.
1	8	2	3	1.390	0.370	0.10	17.30	108.70	0.0089	39.50	40500.
1	8	2	4	2.430	0.390	0.13	30.70	0.0	0.0117	39.50	40500.
1	9	1	1	1.720	0.280	0.05	0.0	121.80	0.0024	16.70	43200.
1	9	1	2	1.010	0.280	0.05	0.0	128.10	0.0026	16.70	43200.
1	9	1	3	0.810	0.210	0.04	7.50	70.10	0.0026	16.70	43200.
1	9	1	4	1.640	0.300	0.05	17.90	0.0	0.0071	16.70	43200.
1	9	2	1	1.800	0.330	0.05	0.0	126.20	0.0028	19.90	43200.
1	9	2	2	1.080	0.290	0.05	0.0	165.40	0.0029	19.90	43200.
1	9	2	3	0.900	0.240	0.05	7.69	92.80	0.0029	19.90	43200.
1	9	2	4	1.760	0.310	0.05	20.10	0.0	0.0094	19.90	43200.
2	1	1	1	2.300	0.410	0.11	0.0	244.00	0.0077	25.60	40500.
2	1	1	2	1.360	0.440	0.09	0.0	267.00	0.0074	25.60	40500.
2	1	1	3	1.100	0.300	0.08	17.00	48.70	0.0074	25.60	40500.
2	1	1	4	1.990	0.320	0.10	24.60	0.0	0.0087	25.60	40500.
2	1	2	1	2.780	0.490	0.14	0.0	288.00	0.0095	39.50	40500.
2	1	2	2	1.830	0.530	0.11	0.0	343.00	0.0089	39.50	40500.
2	1	2	3	1.390	0.370	0.10	17.30	108.70	0.0089	39.50	40500.
2	1	2	4	2.430	0.390	0.13	30.70	0.0	0.0117	39.50	40500.
2	2	1	1	3.420	0.450	0.13	0.0	282.00	0.0070	19.70	12060.
2	2	1	2	1.930	0.460	0.10	0.0	281.00	0.0069	19.70	12060.
2	2	1	3	1.740	0.340	0.10	12.10	24.60	0.0069	19.70	12060.
2	2	1	4	3.280	0.390	0.13	26.40	0.0	0.0057	19.70	12060.
2	2	2	1	3.900	0.470	0.17	0.0	323.00	0.0080	28.20	12060.
2	2	2	2	2.260	0.470	0.13	0.0	340.00	0.0078	28.20	12060.
2	2	2	3	1.980	0.430	0.11	25.70	52.60	0.0078	28.20	12060.
2	2	2	4	3.750	0.450	0.16	30.20	0.0	0.0078	28.20	12060.
2	3	1	1	1.730	0.330	0.07	0.0	137.00	0.0030	14.50	40000.
2	3	1	2	0.990	0.320	0.05	0.0	144.00	0.0031	14.50	40000.
2	3	1	3	0.820	0.250	0.05	13.00	39.80	0.0031	14.50	40000.
2	3	1	4	1.590	0.270	0.07	17.10	0.0	0.0066	14.50	40000.
2	3	2	1	2.210	0.340	0.11	0.0	194.00	0.0043	25.00	40000.
2	3	2	2	1.390	0.370	0.09	0.0	238.00	0.0039	25.00	40000.
2	3	2	3	1.120	0.320	0.08	13.50	107.80	0.0039	25.00	40000.
2	3	2	4	1.970	0.320	0.11	23.70	0.0	0.0088	25.00	40000.

REG.	B.T.	N.R.	SYS.	CAPITAL COST $/SQ FT	INSTALLATN COST $/SQ FT	ANNL O+M COST $/SQ FT	ANNL ELEC USE KWH/SQ FT	ANNL GAS USE CU FT/SQ FT	PEAK ELEC REQMT KW/SQ FT	DESGN COOL LOAD BTU/SQ FT	TYPICL BLD SIZE SQ FT
2	4	1	1	4.000	1.110	0.18	0.0	422.10	0.0076	43.00	40000.
2	4	1	2	4.470	1.130	0.18	0.0	482.40	0.0075	43.00	40000.
2	4	1	3	2.890	0.480	0.15	14.90	322.00	0.0075	43.00	40000.
2	4	1	4	2.690	0.790	0.16	84.80	0.0	0.0138	43.00	40000.
2	4	2	1	5.340	1.270	0.22	0.0	459.90	0.0114	75.00	40000.
2	4	2	2	5.440	1.330	0.22	0.0	567.00	0.0110	75.00	40000.
2	4	2	3	3.790	0.760	0.19	18.80	378.30	0.0110	75.00	40000.
2	4	2	4	3.950	0.940	0.19	95.80	0.0	0.0158	75.00	40000.
2	5	1	1	4.000	1.110	0.18	0.0	469.00	0.0076	43.00	40000.
2	5	1	2	4.470	1.130	0.18	0.0	536.00	0.0075	43.00	40000.
2	5	1	3	2.890	0.480	0.15	14.90	322.00	0.0075	43.00	40000.
2	5	1	4	2.690	0.790	0.16	84.80	0.0	0.0138	43.00	40000.
2	5	2	1	5.340	1.270	0.22	0.0	511.00	0.0114	75.00	40000.
2	5	2	2	5.440	1.330	0.22	0.0	630.00	0.0110	75.00	40000.
2	5	2	3	3.790	0.760	0.19	18.80	378.30	0.0110	75.00	40000.
2	5	2	4	3.950	0.940	0.19	95.80	0.0	0.0158	75.00	40000.
2	6	1	1	2.090	0.410	0.09	0.0	355.00	0.0089	40.00	100000.
2	6	1	2	1.860	0.430	0.09	0.0	341.00	0.0077	40.00	100000.
2	6	1	3	1.500	0.510	0.09	26.60	129.10	0.0077	40.00	100000.
2	6	1	4	1.920	0.350	0.09	36.70	0.0	0.0136	40.00	100000.
2	6	2	1	2.490	0.490	0.10	0.0	407.00	0.0104	56.00	100000.
2	6	2	2	2.280	0.530	0.11	0.0	493.00	0.0097	56.00	100000.
2	6	2	3	2.000	0.430	0.10	28.00	196.00	0.0097	56.00	100000.
2	6	2	4	2.290	0.410	0.10	42.70	0.0	0.0173	56.00	100000.
2	7	1	1	2.30(	0.410	0.11	0.0	244.00	0.0077	25.60	40500.
2	7	1	2	1.360	0.440	0.09	0.0	267.00	0.0074	25.60	40500.
2	7	1	3	1.100	0.300	0.08	17.00	48.70	0.0074	25.60	40500.
2	7	1	4	1.990	0.320	0.10	24.60	0.0	0.0087	25.60	40500.
2	7	2	1	2.780	0.490	0.14	0.0	288.00	0.0095	39.50	40500.
2	7	2	2	1.830	0.530	0.11	0.0	343.00	0.0089	39.50	40500.
2	7	2	3	1.390	0.370	0.10	17.30	108.70	0.0089	39.50	40500.
2	7	2	4	2.430	0.390	0.13	30.70	0.0	0.0117	39.50	40500.
2	8	1	1	2.300	0.410	0.11	0.0	244.00	0.0077	25.60	40500.
2	8	1	2	1.360	0.440	0.09	0.0	267.00	0.0074	25.60	40500.
2	8	1	3	1.100	0.300	0.08	17.00	48.70	0.0074	25.60	40500.
2	8	1	4	1.990	0.320	0.10	24.60	0.0	0.0087	25.60	40500.
2	8	2	1	2.780	0.490	0.14	0.0	288.00	0.0095	39.50	40500.
2	8	2	2	1.830	0.530	0.11	0.0	343.00	0.0089	39.50	40500.
2	8	2	3	1.390	0.370	0.10	17.30	108.70	0.0089	39.50	40500.
2	8	2	4	2.430	0.390	0.13	30.70	0.0	0.0117	39.50	40500.
2	9	1	1	1.720	0.280	0.05	0.0	121.80	0.0024	16.70	43200.
2	9	1	2	1.010	0.280	0.05	0.0	128.10	0.0026	16.70	43200.
2	9	1	3	0.810	0.210	0.04	7.50	70.10	0.0026	16.70	43200.
2	9	1	4	1.640	0.300	0.05	17.90	0.0	0.0071	16.70	43200.
2	9	2	1	1.800	0.330	0.05	0.0	126.20	0.0028	19.90	43200.
2	9	2	2	1.080	0.290	0.05	0.0	165.40	0.0029	19.90	43200.
2	9	2	3	0.900	0.240	0.05	7.69	92.80	0.0029	19.90	43200.
2	9	2	4	1.760	0.310	0.05	20.10	0.0	0.0094	19.90	43200.

ORNL-DWG 78-17396

REG.	B.T.	N.B.	SYS.	CAPITAL COST $/SQ FT	INSTALLATN COST $/SQ FT	ANNL O+M COST $/SQ FT	ANNL ELEC USE KWH/SQ FT	ANNL GAS USE CU FT/SQ FT	PEAK ELEC REQMT KW/SQ FT	DESGN COOL LOAD BTU/SQ FT	TYPICL BLD SIZE SQ FT
3	1	1	1	2.380	0.430	0.12	0.0	247.00	0.0077	27.20	40500.
3	1	1	2	1.550	0.460	0.09	0.0	263.00	0.0076	27.20	40500.
3	1	1	3	1.140	0.320	0.08	18.00	43.00	0.0076	27.20	40500.
3	1	1	4	2.060	0.340	0.11	24.40	0.0	0.0082	27.20	40500.
3	1	2	1	2.890	0.520	0.15	0.0	292.00	0.0095	42.00	40500.
3	1	2	2	1.900	0.560	0.12	0.0	338.00	0.0091	42.00	40500.
3	1	2	3	1.450	0.390	0.11	18.30	96.20	0.0091	42.00	40500.
3	1	2	4	2.520	0.410	0.14	30.50	0.0	0.0111	42.00	40500.
3	2	1	1	3.680	0.490	0.15	0.0	287.00	0.0074	22.10	12060.
3	2	1	2	2.070	0.500	0.10	0.0	284.30	0.0073	22.10	12060.
3	2	1	3	1.880	0.380	0.10	12.40	20.80	0.0073	22.10	12060.
3	2	1	4	3.520	0.430	0.15	26.20	0.0	0.0051	22.10	12060.
3	2	2	1	4.200	0.510	0.19	0.0	329.00	0.0084	31.50	12060.
3	2	2	2	2.440	0.510	0.15	0.0	344.00	0.0082	31.50	12060.
3	2	2	3	2.130	0.470	0.13	26.90	44.50	0.0082	31.50	12060.
3	2	2	4	4.030	0.490	0.18	30.00	0.0	0.0070	31.50	12060.
3	3	1	1	1.770	0.340	0.08	0.0	138.00	0.0032	15.00	40000.
3	3	1	2	1.010	0.330	0.05	0.0	145.10	0.0032	15.00	40000.
3	3	1	3	0.840	0.260	0.05	14.00	34.90	0.0032	15.00	40000.
3	3	1	4	1.630	0.280	0.08	17.10	0.0	0.0066	15.00	40000.
3	3	2	1	2.300	0.350	0.11	0.0	196.00	0.0045	26.00	40000.
3	3	2	2	1.430	0.380	0.09	0.0	239.40	0.0039	26.00	40000.
3	3	2	3	1.160	0.330	0.08	14.50	94.50	0.0039	26.00	40000.
3	3	2	4	2.010	0.330	0.11	23.70	0.0	0.0088	26.00	40000.
3	4	1	1	3.670	0.990	0.16	0.0	403.20	0.0070	37.50	40000.
3	4	1	2	4.080	1.010	0.16	0.0	456.30	0.0069	37.50	40000.
3	4	1	3	2.640	0.430	0.13	15.70	302.00	0.0069	37.50	40000.
3	4	1	4	2.480	0.710	0.14	84.70	0.0	0.0160	37.50	40000.
3	4	2	1	4.800	1.130	0.20	0.0	439.20	0.0105	65.00	40000.
3	4	2	2	4.890	1.180	0.20	0.0	535.50	0.0101	65.00	40000.
3	4	2	3	3.410	0.680	0.17	19.80	355.30	0.0101	65.00	40000.
3	4	2	4	3.550	0.840	0.17	95.60	0.0	0.0183	65.00	40000.
3	5	1	1	3.670	0.990	0.16	0.0	448.00	0.0070	37.50	40000.
3	5	1	2	4.080	1.010	0.16	0.0	507.00	0.0069	37.50	40000.
3	5	1	3	2.640	0.430	0.13	15.70	302.00	0.0069	37.50	40000.
3	5	1	4	2.480	0.710	0.14	84.70	0.0	0.0160	37.50	40000.
3	5	2	1	4.800	1.130	0.20	0.0	488.00	0.0105	65.00	40000.
3	5	2	2	4.890	1.180	0.20	0.0	595.00	0.0101	65.00	40000.
3	5	2	3	3.410	0.680	0.17	19.80	355.30	0.0101	65.00	40000.
3	5	2	4	3.550	0.840	0.17	95.60	0.0	0.0183	65.00	40000.
3	6	1	1	2.090	0.410	0.09	0.0	359.00	0.0089	40.00	100000.
3	6	1	2	1.860	0.430	0.09	0.0	333.00	0.0078	40.00	100000.
3	6	1	3	1.500	0.510	0.09	28.60	112.60	0.0078	40.00	100000.
3	6	1	4	1.920	0.350	0.09	38.40	0.0	0.0129	40.00	100000.
3	6	2	1	2.490	0.490	0.10	0.0	412.00	0.0104	56.00	100000.
3	6	2	2	2.280	0.530	0.11	0.0	481.00	0.0099	56.00	100000.
3	6	2	3	2.000	0.430	0.10	30.00	171.80	0.0099	56.00	100000.
3	6	2	4	2.290	0.410	0.10	44.60	0.0	0.0164	56.00	100000.

REG.	B.T.	N.F.	SYS.	CAPITAL COST $/SQ FT	INSTALLATN COST $/SQ FT	ANNL O+M COST $/SQ FT	ANNL ELEC USE KWH/SQ FT	ANNL GAS USE CU FT/SQ FT	PEAK ELEC REQMT KW/SQ FT	DESGN COOL LOAD BTU/SQ FT	TYPICL BLD SIZE SQ FT
3	7	1	1	2.380	0.430	0.12	0.0	247.00	0.0077	27.20	40500.
3	7	1	2	1.550	0.460	0.09	0.0	263.00	0.0076	27.20	40500.
3	7	1	3	1.140	0.320	0.08	18.00	43.00	0.0076	27.20	40500.
3	7	1	4	2.060	0.340	0.11	24.40	0.0	0.0082	27.20	40500.
3	7	2	1	2.890	0.520	0.15	0.0	292.00	0.0095	42.00	40500.
3	7	2	2	1.900	0.560	0.12	0.0	338.00	0.0091	42.00	40500.
3	7	2	3	1.450	0.390	0.11	18.30	96.20	0.0091	42.00	40500.
3	7	2	4	2.520	0.410	0.14	30.50	0.0	0.0111	42.00	40500.
3	8	1	1	2.380	0.430	0.12	0.0	247.00	0.0077	27.20	40500.
3	8	1	2	1.550	0.460	0.09	0.0	263.00	0.0076	27.20	40500.
3	8	1	3	1.140	0.320	0.08	18.00	43.00	0.0076	27.20	40500.
3	8	1	4	2.060	0.340	0.11	24.40	0.0	0.0082	27.20	40500.
3	8	2	1	2.890	0.520	0.15	0.0	292.00	0.0095	42.00	40500.
3	8	2	2	1.900	0.560	0.12	0.0	338.00	0.0091	42.00	40500.
3	8	2	3	1.450	0.390	0.11	18.30	96.20	0.0091	42.00	40500.
3	8	2	4	2.520	0.410	0.14	30.50	0.0	0.0111	42.00	40500.
3	9	1	1	1.720	0.280	0.05	0.0	129.20	0.0028	16.70	43200.
3	9	1	2	1.010	0.280	0.05	0.0	130.20	0.0026	16.70	43200.
3	9	1	3	0.810	0.210	0.04	7.50	72.80	0.0026	16.70	43200.
3	9	1	4	1.640	0.300	0.05	17.90	0.0	0.0068	16.70	43200.
3	9	2	1	1.810	0.330	0.05	0.0	133.20	0.0032	17.60	43200.
3	9	2	2	1.080	0.290	0.05	0.0	165.40	0.0029	17.60	43200.
3	9	2	3	0.900	0.240	0.05	7.69	72.80	0.0029	17.60	43200.
3	9	2	4	1.770	0.310	0.05	20.10	0.0	0.0090	17.60	43200.
4	1	1	1	1.960	0.360	0.07	0.0	259.00	0.0082	29.60	40500.
4	1	1	2	1.230	0.450	0.10	0.0	277.00	0.0080	29.60	40500.
4	1	1	3	1.090	0.300	0.10	18.30	30.00	0.0080	29.60	40500.
4	1	1	4	1.880	0.260	0.10	21.50	0.0	0.0084	29.60	40500.
4	1	2	1	2.820	0.580	0.20	0.0	317.30	0.0115	59.30	40500.
4	1	2	2	1.920	0.580	0.20	0.0	331.60	0.0110	59.30	40500.
4	1	2	3	1.760	0.450	0.10	19.50	68.00	0.0110	59.30	40500.
4	1	2	4	2.380	0.450	0.20	25.70	0.0	0.0119	59.30	40500.
4	2	1	1	3.480	0.430	0.10	0.0	320.00	0.0070	21.10	12060.
4	2	1	2	1.980	0.440	0.10	0.0	295.00	0.0069	21.10	12060.
4	2	1	3	1.690	0.370	0.10	26.80	10.10	0.0069	21.10	12060.
4	2	1	4	3.290	0.370	0.10	27.70	0.0	0.0070	21.10	12060.
4	2	2	1	3.980	0.460	0.20	0.0	330.00	0.0077	30.20	12060.
4	2	2	2	2.230	0.510	0.20	0.0	295.00	0.0075	30.20	12060.
4	2	2	3	2.060	0.450	0.10	27.40	27.00	0.0075	30.20	12060.
4	2	2	4	3.820	0.420	0.10	29.40	0.0	0.0076	30.20	12060.
4	3	1	1	1.520	0.250	0.10	0.0	150.00	0.0030	14.50	40000.
4	3	1	2	0.920	0.260	0.10	0.0	151.00	0.0029	14.50	40000.
4	3	1	3	0.760	0.200	0.05	14.30	25.00	0.0030	14.50	40000.
4	3	1	4	1.450	0.230	0.05	18.00	0.0	0.0052	14.50	40000.
4	3	2	1	1.960	0.290	0.10	0.0	191.00	0.0041	24.00	40000.
4	3	2	2	1.150	0.330	0.10	0.0	216.00	0.0037	24.00	40000.
4	3	2	3	1.000	0.270	0.10	15.30	65.00	0.0037	24.00	40000.
4	3	2	4	1.880	0.290	0.10	21.50	0.0	0.0091	24.00	40000.

ORNL-DWG 78-17398

REG.	B.T.	N.F.	SYS.	CAPITAL COST $/SQ FT	INSTALLATN COST $/SQ FT	ANNL O+M COST $/SQ FT	ANNL ELEC USE KWH/SQ FT	ANNL GAS USE CU FT/SQ FT	PEAK ELEC REQMT KW/SQ FT	DESGN COOL LOAD BTU/SQ FT	TYPICL BLD SIZE SQ FT
4	4	1	1	4.460	1.050	0.20	0.0	358.10	0.0091	55.00	40000.
4	4	1	2	4.200	1.080	0.20	0.0	396.50	0.0087	55.00	40000.
4	4	1	3	2.780	0.610	0.15	17.00	230.00	0.0089	55.00	40000.
4	4	1	4	3.090	0.720	0.16	56.00	0.0	0.0257	55.00	40000.
4	4	2	1	5.760	1.270	0.23	0.0	430.10	0.0147	110.00	40000.
4	4	2	2	5.330	1.290	0.24	0.0	482.90	0.0140	110.00	40000.
4	4	2	3	3.950	0.840	0.20	22.00	263.00	0.0141	110.00	40000.
4	4	2	4	4.280	0.900	0.20	63.00	0.0	0.0278	110.00	40000.
4	5	1	1	4.460	1.050	0.20	0.0	373.00	0.0091	55.00	40000.
4	5	1	2	4.200	1.080	0.20	0.0	413.00	0.0087	55.00	40000.
4	5	1	3	2.780	0.610	0.15	17.00	230.00	0.0089	55.00	40000.
4	5	1	4	3.090	0.720	0.16	56.00	0.0	0.0257	55.00	40000.
4	5	2	1	5.760	1.270	0.23	0.0	448.00	0.0147	110.00	40000.
4	5	2	2	5.330	1.290	0.24	0.0	503.00	0.0140	110.00	40000.
4	5	2	3	3.950	0.840	0.20	22.00	263.00	0.0141	110.00	40000.
4	5	2	4	4.280	0.900	0.20	63.00	0.0	0.0278	110.00	40000.
4	6	1	1	2.210	0.410	0.09	0.0	382.00	0.0093	52.00	100000.
4	6	1	2	1.970	0.430	0.09	0.0	380.00	0.0085	52.00	100000.
4	6	1	3	1.740	0.340	0.09	29.00	84.20	0.0085	52.00	100000.
4	6	1	4	2.020	0.340	0.12	38.00	0.0	0.0122	52.00	100000.
4	6	2	1	2.400	0.420	0.10	0.0	385.00	0.0098	54.00	100000.
4	6	2	2	2.160	0.480	0.10	0.0	444.00	0.0094	54.00	100000.
4	6	2	3	1.860	0.370	0.10	31.40	118.00	0.0094	54.00	100000.
4	6	2	4	2.150	0.370	0.10	43.00	0.0	0.0157	54.00	100000.
4	7	1	1	1.960	0.360	0.07	0.0	259.00	0.0082	29.60	40500.
4	7	1	2	1.230	0.450	0.10	0.0	277.00	0.0080	29.60	40500.
4	7	1	3	1.090	0.300	0.10	18.30	30.00	0.0080	29.60	40500.
4	7	1	4	1.880	0.260	0.10	21.50	0.0	0.0084	29.60	40500.
4	7	2	1	2.820	0.580	0.20	0.0	317.30	0.0115	59.30	40500.
4	7	2	2	1.920	0.580	0.20	0.0	331.60	0.0110	59.30	40500.
4	7	2	3	1.760	0.450	0.10	19.50	68.00	0.0110	59.30	40500.
4	7	2	4	2.380	0.450	0.20	25.70	0.0	0.0119	59.30	40500.
4	8	1	1	1.960	0.360	0.07	0.0	259.00	0.0082	29.60	40500.
4	8	1	2	1.230	0.450	0.10	0.0	277.00	0.0080	29.60	40500.
4	8	1	3	1.090	0.300	0.10	18.30	30.00	0.0080	29.60	40500.
4	8	1	4	1.880	0.260	0.10	21.50	0.0	0.0084	29.60	40500.
4	8	2	1	2.820	0.580	0.20	0.0	317.30	0.0115	59.30	40500.
4	8	2	2	1.920	0.580	0.20	0.0	331.60	0.0110	59.30	40500.
4	8	2	3	1.760	0.450	0.10	19.50	68.00	0.0110	59.30	40500.
4	8	2	4	2.380	0.450	0.20	25.70	0.0	0.0119	59.30	40500.
4	9	1	1	1.400	0.240	0.05	0.0	112.00	0.0024	12.00	43200.
4	9	1	2	0.840	0.200	0.05	0.0	120.00	0.0023	12.00	43200.
4	9	1	3	0.700	0.190	0.05	8.60	39.80	0.0023	12.00	43200.
4	9	1	4	1.320	0.190	0.05	16.10	0.0	0.0056	12.00	43200.
4	9	2	1	1.600	0.270	0.06	0.0	121.00	0.0027	16.20	43200.
4	9	2	2	0.930	0.260	0.06	0.0	138.00	0.0026	16.20	43200.
4	9	2	3	0.780	0.210	0.04	8.80	61.60	0.0026	16.20	43200.
4	9	2	4	1.420	0.230	0.05	17.30	0.0	0.0066	16.20	43200.

REG.	B.T.	N.B.	SYS.	CAPITAL COST $/SQ FT	INSTALLATN COST $/SQ FT	ANNL O+M COST $/SQ FT	ANNL ELEC USE KWH/SQ FT	ANNL GAS USE CU FT/SQ FT	PEAK ELEC REQMT KW/SQ FT	DESGN COOL LOAD BTU/SQ FT	TYPICL BLD SIZE SQ FT
5	1	1	1	2.380	0.430	0.12	0.0	259.00	0.0078	27.20	40500.
5	1	1	2	1.550	0.460	0.09	0.0	284.00	0.0076	27.20	40500.
5	1	1	3	1.140	0.320	0.08	16.80	66.00	0.0076	27.20	40500.
5	1	1	4	2.060	0.340	0.11	23.70	0.0	0.0147	27.20	40500.
5	1	2	1	2.890	0.520	0.15	0.0	306.00	0.0095	42.00	40500.
5	1	2	2	1.900	0.560	0.12	0.0	365.00	0.0091	42.00	40500.
5	1	2	3	1.450	0.390	0.11	17.00	141.00	0.0091	42.00	40500.
5	1	2	4	2.520	0.410	0.14	29.60	0.0	0.0198	42.00	40500.
5	2	1	1	3.550	0.470	0.14	0.0	290.00	0.0071	20.90	12060.
5	2	1	2	2.000	0.480	0.10	0.0	299.00	0.0070	20.90	12060.
5	2	1	3	1.810	0.357	0.10	26.00	34.00	0.0070	20.90	12060.
5	2	1	4	3.400	0.410	0.14	28.00	0.0	0.0099	20.90	12060.
5	2	2	1	4.050	0.494	0.18	0.0	333.00	0.0081	29.90	12060.
5	2	2	2	2.350	0.490	0.14	0.0	361.00	0.0080	29.90	12060.
5	2	2	3	2.060	0.448	0.12	26.00	72.00	0.0080	29.90	12060.
5	2	2	4	3.890	0.470	0.17	32.00	0.0	0.0135	29.90	12060.
5	3	1	1	1.610	0.300	0.07	0.0	152.00	0.0030	13.50	40000.
5	3	1	2	0.920	0.290	0.05	0.0	159.00	0.0030	13.50	40000.
5	3	1	3	0.760	0.230	0.05	13.00	49.00	0.0030	13.50	40000.
5	3	1	4	1.480	0.250	0.07	19.50	0.0	0.0085	13.50	40000.
5	3	2	1	2.070	0.310	0.10	0.0	214.00	0.0041	22.50	40000.
5	3	2	2	1.300	0.340	0.08	0.0	273.00	0.0037	22.50	40000.
5	3	2	3	1.050	0.290	0.07	13.50	131.00	0.0037	22.50	40000.
5	3	2	4	1.840	0.290	0.10	27.00	0.0	0.0113	22.50	40000.
5	4	1	1	3.670	0.990	0.16	0.0	427.50	0.0077	37.50	40000.
5	4	1	2	4.020	1.010	0.16	0.0	515.70	0.0070	37.50	40000.
5	4	1	3	2.640	0.430	0.13	15.00	355.00	0.0070	37.50	40000.
5	4	1	4	2.480	0.710	0.14	73.00	0.0	0.0397	37.50	40000.
5	4	2	1	4.800	1.130	0.20	0.0	466.20	0.0115	65.00	40000.
5	4	2	2	4.890	1.140	0.20	0.0	605.70	0.0103	65.00	40000.
5	4	2	3	3.410	0.680	0.17	18.00	418.00	0.0103	65.00	40000.
5	4	2	4	3.560	0.840	0.17	81.30	0.0	0.0453	65.00	40000.
5	5	1	1	3.670	0.990	0.16	0.0	475.00	0.0077	37.50	40000.
5	5	1	2	4.020	1.010	0.16	0.0	573.00	0.0070	37.50	40000.
5	5	1	3	2.640	0.430	0.13	15.00	355.00	0.0070	37.50	40000.
5	5	1	4	2.480	0.710	0.14	73.00	0.0	0.0397	37.50	40000.
5	5	2	1	4.800	1.130	0.20	0.0	518.00	0.0115	65.00	40000.
5	5	2	2	4.890	1.140	0.20	0.0	673.00	0.0103	65.00	40000.
5	5	2	3	3.410	0.680	0.17	18.00	418.00	0.0103	65.00	40000.
5	5	2	4	3.560	0.840	0.17	81.30	0.0	0.0453	65.00	40000.
5	6	1	1	1.930	0.380	0.08	0.0	363.00	0.0092	36.00	100000.
5	6	1	2	1.720	0.390	0.08	0.0	433.00	0.0082	36.00	100000.
5	6	1	3	1.390	0.470	0.08	26.00	163.00	0.0082	36.00	100000.
5	6	1	4	1.780	0.320	0.08	43.00	0.0	0.0207	36.00	100000.
5	6	2	1	2.360	0.460	0.10	0.0	416.00	0.0108	50.00	100000.
5	6	2	2	2.100	0.480	0.10	0.0	525.00	0.0105	50.00	100000.
5	6	2	3	1.840	0.390	0.09	27.30	237.00	0.0105	50.00	100000.
5	6	2	4	2.170	0.390	0.09	50.00	0.0	0.0264	50.00	100000.

ORNL-DWG 78-17400

REG.	B.T.	N.F.	SYS.	CAPITAL COST $/SQ FT	INSTALLATN COST $/SQ FT	ANNL O+M COST $/SQ FT	ANNL ELEC USE KWH/SQ FT	ANNL GAS USE CU FT/SQ FT	PEAK ELEC REQMT KW/SQ FT	DESGN COOL LOAD BTU/SQ FT	TYPICL BLD SIZE SQ FT
5	7	1	1	2.380	0.430	0.12	0.0	259.00	0.0078	27.20	40500.
5	7	1	2	1.550	0.460	0.09	0.0	284.00	0.0076	27.20	40500.
5	7	1	3	1.140	0.320	0.08	16.80	66.00	0.0076	27.20	40500.
5	7	1	4	2.060	0.340	0.11	23.70	0.0	0.0147	27.20	40500.
5	7	2	1	2.890	0.520	0.15	0.0	306.00	0.0095	42.00	40500.
5	7	2	2	1.900	0.560	0.12	0.0	365.00	0.0091	42.00	40500.
5	7	2	3	1.450	0.390	0.11	17.00	141.00	0.0091	42.00	40500.
5	7	2	4	2.520	0.410	0.14	29.60	0.0	0.0198	42.00	40500.
5	8	1	1	2.380	0.430	0.12	0.0	259.00	0.0078	27.20	40500.
5	8	1	2	1.550	0.460	0.09	0.0	284.00	0.0076	27.20	40500.
5	8	1	3	1.140	0.320	0.08	16.80	66.00	0.0076	27.20	40500.
5	8	1	4	2.060	0.340	0.11	23.70	0.0	0.0147	27.20	40500.
5	8	2	1	2.890	0.520	0.15	0.0	306.00	0.0095	42.00	40500.
5	8	2	2	1.900	0.560	0.12	0.0	365.00	0.0091	42.00	40500.
5	8	2	3	1.450	0.390	0.11	17.00	141.00	0.0091	42.00	40500.
5	8	2	4	2.520	0.410	0.14	29.60	0.0	0.0198	42.00	40500.
5	9	1	1	1.580	0.250	0.05	0.0	121.00	0.0029	15.30	43200.
5	9	1	2	0.950	0.260	0.05	0.0	146.00	0.0026	15.30	43200.
5	9	1	3	0.760	0.200	0.04	7.52	81.30	0.0026	15.30	43200.
5	9	1	4	1.510	0.270	0.05	19.10	0.0	0.0092	15.30	43200.
5	9	2	1	1.690	0.300	0.05	0.0	137.80	0.0033	18.10	43200.
5	9	2	2	1.010	0.270	0.05	0.0	189.20	0.0029	18.10	43200.
5	9	2	3	0.850	0.220	0.05	7.69	108.80	0.0029	18.10	43200.
5	9	2	4	1.650	0.290	0.05	21.40	0.0	0.0118	18.10	43200.
6	1	1	1	2.640	0.490	0.14	0.0	269.00	0.0087	32.00	40500.
6	1	1	2	1.730	0.530	0.10	0.0	261.00	0.0082	32.00	40500.
6	1	1	3	1.270	0.370	0.09	21.20	25.60	0.0082	32.00	40500.
6	1	1	4	2.280	0.390	0.13	25.30	0.0	0.0089	32.00	40500.
6	1	2	1	3.610	0.590	0.17	0.0	318.00	0.0107	49.40	40500.
6	1	2	2	2.120	0.640	0.14	0.0	336.00	0.0099	49.40	40500.
6	1	2	3	1.610	0.450	0.13	21.50	57.00	0.0099	49.40	40500.
6	1	2	4	3.190	0.470	0.16	31.60	0.0	0.0120	49.40	40500.
6	2	1	1	4.150	0.570	0.17	0.0	302.00	0.0082	26.70	12060.
6	2	1	2	2.350	0.590	0.12	0.0	289.60	0.0080	26.70	12060.
6	2	1	3	2.130	0.440	0.12	13.60	67.20	0.0080	26.70	12060.
6	2	1	4	3.980	0.500	0.17	27.70	0.0	0.0050	26.70	12060.
6	2	2	1	4.740	0.600	0.22	0.0	346.00	0.0093	38.10	12060.
6	2	2	2	2.760	0.600	0.17	0.0	350.00	0.0090	38.10	12060.
6	2	2	3	2.420	0.550	0.15	29.00	144.00	0.0090	38.10	12060.
6	2	2	4	4.550	0.570	0.21	31.70	0.0	0.0068	38.10	12060.
6	3	1	1	1.950	0.380	0.09	0.0	144.00	0.0036	17.50	40000.
6	3	1	2	1.120	0.370	0.06	0.0	132.00	0.0035	17.50	40000.
6	3	1	3	0.920	0.290	0.06	16.10	21.10	0.0035	17.50	40000.
6	3	1	4	1.790	0.320	0.09	17.10	0.0	0.0064	17.50	40000.
6	3	2	1	2.550	0.390	0.12	0.0	203.00	0.0050	30.00	40000.
6	3	2	2	1.570	0.430	0.10	0.0	219.00	0.0043	30.00	40000.
6	3	2	3	1.270	0.370	0.09	16.80	57.20	0.0043	30.00	40000.
6	3	2	4	2.200	0.370	0.13	23.70	0.0	0.0085	30.00	40000.

REG.	B.T.	N.R.	SYS.	CAPITAL COST $/SQ FT	INSTALLATN COST $/SQ FT	ANNL O+M COST $/SQ FT	ANNL ELEC USE KWH/SQ FT	ANNL GAS USE CU FT/SQ FT	PEAK ELEC REQMT KW/SQ FT	DESGN COOL LOAD BTU/SQ FT	TYPICL BLD SIZE SQ FT
6	4	1	1	4.000	1.110	0.18	0.0	407.00	0.0081	43.00	40000.
6	4	1	2	4.470	1.130	0.18	0.0	423.40	0.0073	43.00	40000.
6	4	1	3	2.890	0.480	0.15	18.30	235.00	0.0073	43.00	40000.
6	4	1	4	2.690	0.790	0.16	79.30	0.0	0.0186	43.00	40000.
6	4	2	1	5.340	1.270	0.22	0.0	443.50	0.0122	75.00	40000.
6	4	2	2	5.440	1.330	0.22	0.0	497.30	0.0107	75.00	40000.
6	4	2	3	3.790	0.760	0.19	23.00	276.00	0.0107	75.00	40000.
6	4	2	4	3.950	0.940	0.19	89.50	0.0	0.0212	75.00	40000.
6	5	1	1	4.000	1.110	0.18	0.0	424.00	0.0081	43.00	40000.
6	5	1	2	4.470	1.130	0.18	0.0	441.00	0.0073	43.00	40000.
6	5	1	3	2.890	0.480	0.15	18.30	235.00	0.0073	43.00	40000.
6	5	1	4	2.690	0.790	0.16	79.30	0.0	0.0186	43.00	40000.
6	5	2	1	5.340	1.270	0.22	0.0	462.00	0.0122	75.00	40000.
6	5	2	2	5.440	1.330	0.22	0.0	518.00	0.0107	75.00	40000.
6	5	2	3	3.790	0.760	0.19	23.00	276.00	0.0107	75.00	40000.
6	5	2	4	3.950	0.940	0.19	89.50	0.0	0.0212	75.00	40000.
6	6	1	1	2.240	0.450	0.09	0.0	373.00	0.0093	44.00	100000.
6	6	1	2	2.000	0.460	0.09	0.0	313.00	0.0083	44.00	100000.
6	6	1	3	1.610	0.550	0.09	32.40	70.20	0.0083	44.00	100000.
6	6	1	4	2.060	0.380	0.09	36.80	0.0	0.0126	44.00	100000.
6	6	2	1	2.690	0.530	0.11	0.0	428.00	0.0109	62.00	100000.
6	6	2	2	2.460	0.570	0.11	0.0	453.00	0.0105	62.00	100000.
6	6	2	3	2.160	0.470	0.10	34.00	106.00	0.0105	62.00	100000.
6	6	2	4	2.470	0.450	0.10	42.80	0.0	0.0161	62.00	100000.
6	7	1	1	2.640	0.490	0.14	0.0	269.00	0.0087	32.00	40500.
6	7	1	2	1.730	0.530	0.10	0.0	261.00	0.0082	32.00	40500.
6	7	1	3	1.270	0.370	0.09	21.20	25.60	0.0082	32.00	40500.
6	7	1	4	2.280	0.390	0.13	25.30	0.0	0.0089	32.00	40500.
6	7	2	1	3.610	0.590	0.17	0.0	318.00	0.0107	49.40	40500.
6	7	2	2	2.120	0.640	0.14	0.0	336.00	0.0099	49.40	40500.
6	7	2	3	1.610	0.450	0.13	21.50	57.00	0.0099	49.40	40500.
6	7	2	4	3.190	0.470	0.16	31.60	0.0	0.0120	49.40	40500.
6	8	1	1	2.640	0.490	0.14	0.0	269.00	0.0087	32.00	40500.
6	8	1	2	1.730	0.530	0.10	0.0	261.00	0.0082	32.00	40500.
6	8	1	3	1.270	0.370	0.09	21.20	25.60	0.0082	32.00	40500.
6	8	1	4	2.280	0.390	0.13	25.30	0.0	0.0089	32.00	40500.
6	8	2	1	3.610	0.590	0.17	0.0	318.00	0.0107	49.40	40500.
6	8	2	2	2.120	0.640	0.14	0.0	336.00	0.0099	49.40	40500.
6	8	2	3	1.610	0.450	0.13	21.50	57.00	0.0099	49.40	40500.
6	8	2	4	3.190	0.470	0.16	31.60	0.0	0.0120	49.40	40500.
6	9	1	1	1.530	0.240	0.05	0.0	132.20	0.0029	13.90	43200.
6	9	1	2	0.890	0.240	0.05	0.0	118.20	0.0027	13.90	43200.
6	9	1	3	0.710	0.180	0.04	9.80	47.60	0.0027	13.90	43200.
6	9	1	4	1.460	0.260	0.05	16.70	0.0	0.0050	13.90	43200.
6	9	2	1	1.570	0.270	0.05	0.0	136.20	0.0033	16.20	43200.
6	9	2	2	0.940	0.250	0.05	0.0	147.20	0.0030	16.20	43200.
6	9	2	3	0.790	0.200	0.05	10.00	59.30	0.0030	16.20	43200.
6	9	2	4	1.540	0.270	0.05	18.70	0.0	0.0077	16.20	43200.

ORNL-DWG 78-17402

REG.	B.T.	N.R.	SYS.	CAPITAL COST $/SQ FT	INSTALLATN COST $/SQ FT	ANNL O+M COST $/SQ FT	ANNL ELEC USE KWH/SQ FT	ANNL GAS USE CU FT/SQ FT	PEAK ELEC REQMT KW/SQ FT	DESGN COOL LOAD BTU/SQ FT	TYPICL BLD SIZE SQ FT
7	1	1	1	2.560	0.470	0.13	0.0	268.00	0.0082	30.40	40500.
7	1	1	2	1.670	0.500	0.10	0.0	284.00	0.0078	30.40	40500.
7	1	1	3	1.230	0.350	0.09	18.50	48.00	0.0078	30.40	40500.
7	1	1	4	2.220	0.370	0.12	26.20	0.0	0.0102	30.40	40500.
7	1	2	1	3.090	0.570	0.16	0.0	316.00	0.0101	46.90	40500.
7	1	2	2	2.040	0.610	0.13	0.0	365.00	0.0094	46.90	40500.
7	1	2	3	1.560	0.430	0.12	18.80	106.90	0.0094	46.90	40500.
7	1	2	4	2.700	0.450	0.15	32.70	0.0	0.0137	46.90	40500.
7	2	1	1	3.920	0.530	0.16	0.0	296.00	0.0077	24.40	12060.
7	2	1	2	2.210	0.540	0.11	0.0	295.00	0.0071	24.40	12060.
7	2	1	3	2.000	0.410	0.11	12.90	25.30	0.0071	24.40	12060.
7	2	1	4	3.750	0.470	0.16	28.00	0.0	0.0064	24.40	12060.
7	2	2	1	4.470	0.560	0.20	0.0	339.00	0.0088	34.80	12060.
7	2	2	2	2.600	0.560	0.16	0.0	357.00	0.0080	34.80	12060.
7	2	2	3	2.280	0.510	0.14	27.40	53.80	0.0080	34.80	12060.
7	2	2	4	4.290	0.530	0.19	32.00	0.0	0.0087	34.80	12060.
7	3	1	1	1.840	0.360	0.08	0.0	148.00	0.0034	16.00	40000.
7	3	1	2	1.060	0.340	0.06	0.0	155.00	0.0033	16.00	40000.
7	3	1	3	0.870	0.270	0.06	14.20	38.80	0.0033	16.00	40000.
7	3	1	4	1.690	0.300	0.08	18.70	0.0	0.0083	16.00	40000.
7	3	2	1	2.390	0.360	0.11	0.0	210.00	0.0047	27.50	40000.
7	3	2	2	1.480	0.400	0.09	0.0	257.00	0.0041	27.50	40000.
7	3	2	3	1.200	0.340	0.12	14.80	105.10	0.0041	27.50	40000.
7	3	2	4	2.090	0.340	0.12	25.90	0.0	0.0110	27.50	40000.
7	4	1	1	3.670	0.990	0.16	0.0	414.90	0.0072	37.50	40000.
7	4	1	2	4.080	1.010	0.16	0.0	475.20	0.0071	37.50	40000.
7	4	1	3	2.640	0.430	0.13	16.10	314.00	0.0071	37.50	40000.
7	4	1	4	2.480	0.710	0.14	85.30	0.0	0.0160	37.50	40000.
7	4	2	1	4.800	1.130	0.20	0.0	451.80	0.0108	65.00	40000.
7	4	2	2	4.890	1.180	0.20	0.0	558.00	0.0104	65.00	40000.
7	4	2	3	3.410	0.680	0.17	20.30	370.00	0.0104	65.00	40000.
7	4	2	4	3.550	0.840	0.17	96.30	0.0	0.0183	65.00	40000.
7	5	1	1	3.670	0.990	0.16	0.0	461.00	0.0072	37.50	40000.
7	5	1	2	4.080	1.010	0.16	0.0	528.00	0.0071	37.50	40000.
7	5	1	3	2.640	0.430	0.13	16.10	314.00	0.0071	37.50	40000.
7	5	1	4	2.480	0.710	0.14	85.30	0.0	0.0160	37.50	40000.
7	5	2	1	4.800	1.130	0.20	0.0	502.00	0.0108	65.00	40000.
7	5	2	2	4.890	1.180	0.20	0.0	620.00	0.0104	65.00	40000.
7	5	2	3	3.410	0.680	0.17	20.30	370.00	0.0104	65.00	40000.
7	5	2	4	3.550	0.840	0.17	96.30	0.0	0.0183	65.00	40000.
7	6	1	1	2.240	0.450	0.09	0.0	378.00	0.0099	44.00	100000.
7	6	1	2	2.000	0.460	0.09	0.0	354.00	0.0083	44.00	100000.
7	6	1	3	1.610	0.550	0.09	28.60	125.00	0.0083	44.00	100000.
7	6	1	4	2.060	0.380	0.09	38.90	0.0	0.0158	44.00	100000.
7	6	2	1	2.690	0.530	0.11	0.0	433.00	0.0109	62.00	100000.
7	6	2	2	2.460	0.570	0.11	0.0	512.00	0.0105	62.00	100000.
7	6	2	3	2.160	0.470	0.10	30.00	191.00	0.0105	62.00	100000.
7	6	2	4	2.470	0.450	0.10	45.20	0.0	0.0201	62.00	100000.

ORNL-DWG 78-17403

REG.	B.T.	N.F.	SYS.	CAPITAL COST $/SQ FT	INSTALLATN COST $/SQ FT	ANNL O+M COST $/SQ FT	ANNL ELEC USE KWH/SQ FT	ANNL GAS USE CU FT/SQ FT	PEAK ELEC REQMT KW/SQ FT	DESGN COOL LOAD BTU/SQ FT	TYPICL BLD SIZE SQ FT
7	7	1	1	2.560	0.470	0.13	0.0	268.00	0.0082	30.40	40500.
7	7	1	2	1.670	0.500	0.10	0.0	284.00	0.0078	30.40	40500.
7	7	1	3	1.230	0.350	0.09	18.50	48.00	0.0078	30.40	40500.
7	7	1	4	2.220	0.370	0.12	26.20	0.0	0.0102	30.40	40500.
7	7	2	1	3.090	0.570	0.16	0.0	316.00	0.0101	46.90	40500.
7	7	2	2	2.040	0.610	0.13	0.0	365.00	0.0094	46.90	40500.
7	7	2	3	1.560	0.430	0.12	18.80	106.90	0.0094	46.90	40500.
7	7	2	4	2.700	0.450	0.15	32.70	0.0	0.0137	46.90	40500.
7	8	1	1	2.560	0.470	0.13	0.0	268.00	0.0082	30.40	40500.
7	8	1	2	1.670	0.500	0.10	0.0	284.00	0.0078	30.40	40500.
7	8	1	3	1.230	0.350	0.09	18.50	48.00	0.0078	30.40	40500.
7	8	1	4	2.220	0.370	0.12	26.20	0.0	0.0102	30.40	40500.
7	8	2	1	3.090	0.570	0.16	0.0	316.00	0.0101	46.90	40500.
7	8	2	2	2.040	0.610	0.13	0.0	365.00	0.0094	46.90	40500.
7	8	2	3	1.560	0.430	0.12	18.80	106.90	0.0094	46.90	40500.
7	8	2	4	2.700	0.450	0.15	32.70	0.0	0.0137	46.90	40500.
7	9	1	1	1.530	0.240	0.05	0.0	138.20	0.0028	13.90	43200.
7	9	1	2	0.890	0.240	0.05	0.0	139.20	0.0027	13.90	43200.
7	9	1	3	0.710	0.180	0.04	8.50	71.70	0.0027	13.90	43200.
7	9	1	4	1.460	0.260	0.05	19.10	0.0	0.0078	13.90	43200.
7	9	2	1	1.570	0.270	0.05	0.0	142.20	0.0032	16.20	43200.
7	9	2	2	0.940	0.250	0.05	0.0	176.20	0.0030	16.20	43200.
7	9	2	3	0.790	0.200	0.05	8.70	91.70	0.0030	16.20	43200.
7	9	2	4	1.540	0.270	0.05	21.40	0.0	0.0104	16.20	43200.
8	1	1	1	2.380	0.430	0.12	0.0	262.00	0.0085	27.20	40500.
8	1	1	2	1.550	0.460	0.09	0.0	292.00	0.0076	27.20	40500.
8	1	1	3	1.140	0.320	0.08	16.30	57.50	0.0076	27.20	40500.
8	1	1	4	2.060	0.340	0.11	25.90	0.0	0.0129	27.20	40500.
8	1	2	1	2.890	0.520	0.15	0.0	309.00	0.0104	42.00	40500.
8	1	2	2	1.900	0.560	0.12	0.0	375.00	0.0091	42.00	40500.
8	1	2	3	1.450	0.390	0.11	16.50	128.20	0.0091	42.00	40500.
8	1	2	4	2.520	0.410	0.14	32.40	0.0	0.0174	42.00	40500.
8	2	1	1	3.550	0.460	0.14	0.0	287.00	0.0072	20.90	12060.
8	2	1	2	2.000	0.480	0.10	0.0	295.00	0.0071	20.90	12060.
8	2	1	3	1.810	0.360	0.10	12.10	31.00	0.0071	20.90	12060.
8	2	1	4	3.400	0.410	0.14	27.10	0.0	0.0071	20.90	12060.
8	2	2	1	4.050	0.490	0.18	0.0	329.00	0.0082	29.90	12060.
8	2	2	2	2.350	0.490	0.14	0.0	357.00	0.0080	29.90	12060.
8	2	2	3	2.060	0.450	0.12	25.70	65.90	0.0080	29.90	12060.
8	2	2	4	3.890	0.470	0.17	31.00	0.0	0.0097	29.90	12060.
8	3	1	1	1.800	0.350	0.08	0.0	146.00	0.0034	15.50	40000.
8	3	1	2	1.030	0.330	0.06	0.0	161.70	0.0034	15.50	40000.
8	3	1	3	0.850	0.260	0.06	12.80	45.20	0.0034	15.50	40000.
8	3	1	4	1.660	0.290	0.08	18.70	0.0	0.0099	15.50	40000.
8	3	2	1	2.370	0.360	0.11	0.0	206.00	0.0047	27.00	40000.
8	3	2	2	1.470	0.390	0.09	0.0	267.50	0.0042	27.00	40000.
8	3	2	3	1.180	0.340	0.08	13.30	121.90	0.0042	27.00	40000.
8	3	2	4	2.070	0.340	0.12	25.90	0.0	0.0132	27.00	40000.

ORNL-DWG 78-17404

REG.	B.T.	N.F.	SYS.	CAPITAL COST $/SQ FT	INSTALLATN COST $/SQ FT	ANNL O+M COST $/SQ FT	ANNL ELEC USE KWH/SQ FT	ANNL GAS USE CU FT/SQ FT	PEAK ELEC REQMT KW/SQ FT	DESGN COOL LOAD BTU/SQ FT	TYPICL BLD SIZE SQ FT
8	4	1	1	3.850	1.050	0.17	0.0	360.00	0.0080	40.50	40000.
8	4	1	2	4.290	1.080	0.17	0.0	442.80	0.0077	40.50	40000.
8	4	1	3	2.780	0.460	0.14	14.30	295.70	0.0077	40.50	40000.
8	4	1	4	2.600	0.760	0.15	78.50	0.0	0.0276	40.50	40000.
8	4	2	1	5.070	1.200	0.21	0.0	392.40	0.0120	70.00	40000.
8	4	2	2	5.170	1.250	0.21	0.0	520.20	0.0114	70.00	40000.
8	4	2	3	3.600	0.720	0.18	18.00	347.40	0.0114	70.00	40000.
8	4	2	4	3.750	0.890	0.18	88.60	0.0	0.0315	70.00	40000.
8	5	1	1	3.850	1.050	0.17	0.0	400.00	0.0080	40.50	40000.
8	5	1	2	4.290	1.080	0.17	0.0	492.00	0.0077	40.50	40000.
8	5	1	3	2.780	0.460	0.14	14.30	295.70	0.0077	40.50	40000.
8	5	1	4	2.600	0.760	0.15	78.50	0.0	0.0276	40.50	40000.
8	5	2	1	5.070	1.200	0.21	0.0	436.00	0.0120	70.00	40000.
8	5	2	2	5.170	1.250	0.21	0.0	578.00	0.0114	70.00	40000.
8	5	2	3	3.600	0.720	0.18	18.00	347.40	0.0114	70.00	40000.
8	5	2	4	3.750	0.890	0.18	88.60	0.0	0.0315	70.00	40000.
8	6	1	1	2.420	0.490	0.10	0.0	370.00	0.0118	49.00	100000.
8	6	1	2	2.160	0.500	0.10	0.0	365.00	0.0087	49.00	100000.
8	6	1	3	1.750	0.610	0.10	25.70	148.20	0.0087	49.00	100000.
8	6	1	4	2.240	0.410	0.10	38.70	0.0	0.0234	49.00	100000.
8	6	2	1	2.880	0.570	0.12	0.0	424.00	0.0139	68.00	100000.
8	6	2	2	2.640	0.620	0.12	0.0	528.00	0.0111	68.00	100000.
8	6	2	3	2.310	0.500	0.11	27.00	225.00	0.0111	68.00	100000.
8	6	2	4	2.650	0.490	0.11	45.00	0.0	0.0299	68.00	100000.
8	7	1	1	2.380	0.430	0.12	0.0	262.00	0.0085	27.20	40500.
8	7	1	2	1.550	0.460	0.09	0.0	292.00	0.0076	27.20	40500.
8	7	1	3	1.140	0.320	0.08	16.30	57.50	0.0076	27.20	40500.
8	7	1	4	2.060	0.340	0.11	25.90	0.0	0.0129	27.20	40500.
8	7	2	1	2.890	0.520	0.15	0.0	309.00	0.0104	42.00	40500.
8	7	2	2	1.900	0.560	0.12	0.0	375.00	0.0091	42.00	40500.
8	7	2	3	1.450	0.390	0.11	16.50	128.20	0.0091	42.00	40500.
8	7	2	4	2.520	0.410	0.14	32.40	0.0	0.0174	42.00	40500.
8	8	1	1	2.380	0.430	0.12	0.0	262.00	0.0085	27.20	40500.
8	8	1	2	1.550	0.460	0.09	0.0	292.00	0.0076	27.20	40500.
8	8	1	3	1.140	0.320	0.08	16.30	57.50	0.0076	27.20	40500.
8	8	1	4	2.060	0.340	0.11	25.90	0.0	0.0129	27.20	40500.
8	8	2	1	2.890	0.520	0.15	0.0	309.00	0.0104	42.00	40500.
8	8	2	2	1.900	0.560	0.12	0.0	375.00	0.0091	42.00	40500.
8	8	2	3	1.450	0.390	0.11	16.50	128.20	0.0091	42.00	40500.
8	8	2	4	2.520	0.410	0.14	32.40	0.0	0.0174	42.00	40500.
8	9	1	1	1.530	0.240	0.05	0.0	134.20	0.0027	13.90	43200.
8	9	1	2	0.890	0.240	0.05	0.0	127.00	0.0026	13.90	43200.
8	9	1	3	0.710	0.180	0.04	7.20	75.00	0.0026	13.90	43200.
8	9	1	4	1.460	0.260	0.05	19.00	0.0	0.0083	13.90	43200.
8	9	2	1	1.570	0.270	0.05	0.0	138.20	0.0031	16.20	43200.
8	9	2	2	0.940	0.250	0.05	0.0	174.20	0.0029	16.20	43200.
8	9	2	3	0.790	0.200	0.05	7.40	96.20	0.0029	16.20	43200.
8	9	2	4	1.540	0.270	0.05	19.20	0.0	0.0111	16.20	43200.

REG.	B.T.	N.F.	SYS.	CAPITAL COST $/SQ FT	INSTALLATN COST $/SQ FT	ANNL O+M COST $/SQ FT	ANNL ELEC USE KWH/SQ FT	ANNL GAS USE CU FT/SQ FT	PEAK ELEC REQMT KW/SQ FT	DESGN COOL LOAD BTU/SQ FT	TYPICL BLD SIZE SQ FT
9	1	1	1	2.070	0.340	0.09	0.0	242.00	0.0075	24.70	40500.
9	1	1	2	1.400	0.409	0.10	0.0	241.00	0.0074	24.70	40500.
9	1	1	3	1.030	0.280	0.06	16.80	15.00	0.0074	24.70	40500.
9	1	1	4	1.660	0.220	0.06	18.70	0.0	0.0078	24.60	40500.
9	1	2	1	2.450	0.450	0.11	0.0	247.00	0.0089	39.50	40500.
9	1	2	2	1.340	0.450	0.09	0.0	311.00	0.0089	39.50	40500.
9	1	2	3	1.340	0.360	0.09	17.50	32.00	0.0089	39.50	40500.
9	1	2	4	2.020	0.300	0.08	20.00	0.0	0.0095	39.50	40500.
9	2	1	1	3.310	0.420	0.08	0.0	312.40	0.0069	18.60	12060.
9	2	1	2	1.890	0.450	0.08	0.0	310.00	0.0067	18.60	12060.
9	2	1	3	1.590	0.280	0.07	26.00	2.66	0.0067	18.60	12060.
9	2	1	4	2.370	0.310	0.07	26.20	0.0	0.0068	18.60	12060.
9	2	2	1	3.780	0.440	0.10	0.0	315.00	0.0077	25.90	12060.
9	2	2	2	2.110	0.450	0.10	0.0	313.80	0.0075	25.90	12060.
9	2	2	3	1.430	0.376	0.09	26.00	9.00	0.0075	25.90	12060.
9	2	2	4	3.460	0.340	0.09	26.70	0.0	0.0077	25.90	12060.
9	3	1	1	1.370	0.230	0.04	0.0	133.00	0.0026	10.00	40000.
9	3	1	2	0.760	0.230	0.04	0.0	132.00	0.0025	10.00	40000.
9	3	1	3	0.600	0.180	0.03	13.20	15.70	0.0025	10.00	40000.
9	3	1	4	1.230	0.190	0.03	16.40	0.0	0.0035	10.00	40000.
9	3	2	1	1.500	0.250	0.05	0.0	146.00	0.0041	17.50	40000.
9	3	2	2	0.660	0.270	0.06	0.0	145.00	0.0039	17.50	40000.
9	3	2	3	0.840	0.240	0.05	13.80	17.20	0.0039	17.50	40000.
9	3	2	4	1.490	0.210	0.05	17.30	0.0	0.0046	17.50	40000.
9	4	1	1	3.670	0.990	0.16	0.0	374.00	0.0072	37.50	40000.
9	4	1	2	3.380	0.980	0.17	0.0	385.00	0.0075	37.50	40000.
9	4	1	3	2.110	0.500	0.10	14.40	220.00	0.0075	37.50	40000.
9	4	1	4	2.240	0.630	0.13	58.00	0.0	0.0273	37.50	40000.
9	4	2	1	4.700	1.090	0.20	0	415.00	0.0106	65.00	40000.
9	4	2	2	4.420	1.120	0.20	0.0	433.00	0.0103	65.00	40000.
9	4	2	3	3.000	0.640	0.16	18.00	238.00	0.0103	65.00	40000.
9	4	2	4	3.230	0.730	0.16	63.00	0.0	0.0288	65.00	40000.
9	5	1	1	3.670	0.990	0.16	0.0	374.00	0.0072	37.50	40000.
9	5	1	2	3.380	0.980	0.17	0.0	385.00	0.0075	37.50	40000.
9	5	1	3	2.110	0.500	0.10	14.40	220.00	0.0075	37.50	40000.
9	5	1	4	2.240	0.630	0.13	58.00	0.0	0.0273	37.50	40000.
9	5	2	1	4.700	1.090	0.20	0.0	415.00	0.0106	65.00	40000.
9	5	2	2	4.420	1.120	0.20	0.0	433.00	0.0103	65.00	40000.
9	5	2	3	3.000	0.640	0.16	18.00	238.00	0.0103	65.00	40000.
9	5	2	4	3.230	0.730	0.16	63.00	0.0	0.0288	65.00	40000.
9	6	1	1	1.650	0.310	0.08	0.0	318.00	0.0081	28.00	100000.
9	6	1	2	1.480	0.330	0.07	0.0	316.00	0.0072	28.00	100000.
9	6	1	3	1.250	0.250	0.07	26.00	43.70	0.0072	28.00	100000.
9	6	1	4	1.400	0.220	0.10	32.00	0.0	0.0083	28.00	100000.
9	6	2	1	1.700	0.290	0.08	0.0	327.00	0.0093	36.00	100000.
9	6	2	2	1.690	0.380	0.08	0.0	324.00	0.0086	36.00	100000.
9	6	2	3	1.460	0.290	0.08	27.30	61.80	0.0086	36.00	100000.
9	6	2	4	1.550	0.240	0.07	35.00	0.0	0.0096	36.00	100000.

ORNL-DWG 78-17406

REG.	B.T.	N.R.	SYS.	CAPITAL COST $/SQ FT	INSTALLATN COST $/SQ FT	ANNL O+M COST $/SQ FT	ANNL ELEC USE KWH/SQ FT	ANNL GAS USE CU FT/SQ FT	PEAK ELEC REQMT KW/SQ FT	DESGN COOL LOAD BTU/SQ FT	TYPICL BLD SIZE SQ FT
9	7	1	1	2.070	0.340	0.09	0.0	242.00	0.0075	24.70	40500.
9	7	1	2	1.400	0.409	0.10	0.0	241.00	0.0074	24.70	40500.
9	7	1	3	1.030	0.280	0.06	16.80	15.00	0.0074	24.70	40500.
9	7	1	4	1.660	0.220	0.06	18.70	0.0	0.0078	24.60	40500.
9	7	2	1	2.450	0.450	0.11	0.0	247.00	0.0089	39.50	40500.
9	7	2	2	1.340	0.450	0.09	0.0	311.00	0.0089	39.50	40500.
9	7	2	3	1.340	0.360	0.09	17.50	32.00	0.0089	39.50	40500.
9	7	2	4	2.020	0.300	0.08	20.00	0.0	0.0095	39.50	40500.
9	8	1	1	2.070	0.340	0.09	0.0	242.00	0.0075	24.70	40500.
9	8	1	2	1.400	0.409	0.10	0.0	241.00	0.0074	24.70	40500.
9	8	1	3	1.030	0.280	0.06	16.80	15.00	0.0074	24.70	40500.
9	8	1	4	1.660	0.220	0.06	18.70	0.0	0.0078	24.60	40500.
9	8	2	1	2.450	0.450	0.11	0.0	247.00	0.0089	39.50	40500.
9	8	2	2	1.340	0.450	0.09	0.0	311.00	0.0089	39.50	40500.
9	8	2	3	1.340	0.360	0.09	17.50	32.00	0.0089	39.50	40500.
9	8	2	4	2.020	0.300	0.08	20.00	0.0	0.0095	39.50	40500.
9	9	1	1	1.290	0.230	0.04	0.0	98.60	0.0021	10.20	43200.
9	9	1	2	0.780	0.210	0.04	0.0	98.00	0.0021	10.20	43200.
9	9	1	3	0.630	0.140	0.03	7.53	39.80	0.0021	10.20	43200.
9	9	1	4	1.150	0.210	0.03	14.80	0.0	0.0033	10.20	43200.
9	9	2	1	1.390	0.230	0.05	0.0	99.30	0.0023	12.00	43200.
9	9	2	2	0.820	0.220	0.05	0.0	110.20	0.0022	12.00	43200.
9	9	2	3	0.670	0.160	0.04	7.58	43.50	0.0022	12.00	43200.
9	9	2	4	1.250	0.210	0.04	14.90	0.0	0.0036	12.00	43200.
10	1	1	1	1.710	0.280	0.08	0.0	239.00	0.0061	15.40	40500.
10	1	1	2	1.090	0.300	0.06	0.0	221.00	0.0057	15.40	40500.
10	1	1	3	0.800	0.210	0.05	13.90	51.00	0.0061	15.40	40500.
10	1	1	4	1.480	0.220	0.07	21.90	0.0	0.0073	15.40	40500.
10	1	2	1	2.080	0.340	0.10	0.0	244.00	0.0072	24.70	40500.
10	1	2	2	1.340	0.360	0.08	0.0	285.00	0.0069	24.70	40500.
10	1	2	3	1.020	0.250	0.07	14.80	110.50	0.0074	24.70	40500.
10	1	2	4	1.820	0.270	0.09	23.50	0.0	0.0098	24.70	40500.
10	2	1	1	2.880	0.360	0.11	0.0	301.40	0.0063	15.10	12060.
10	2	1	2	1.610	0.370	0.08	0.0	316.00	0.0062	15.10	12060.
10	2	1	3	1.460	0.280	0.08	24.00	15.10	0.0062	15.10	12060.
10	2	1	4	2.760	0.310	0.11	26.40	0.0	0.0079	15.10	12060.
10	2	2	1	3.290	0.380	0.15	0.0	304.00	0.0072	21.60	12060.
10	2	2	2	1.900	0.380	0.11	0.0	320.00	0.0071	21.60	12060.
10	2	2	3	1.660	0.340	0.09	24.00	51.20	0.0071	21.60	12060.
10	2	2	4	3.160	0.360	0.13	27.90	0.0	0.0090	21.60	12060.
10	3	1	1	1.180	0.200	0.05	0.0	120.00	0.0022	8.00	40000.
10	3	1	2	0.670	0.190	0.03	0.0	135.80	0.0023	8.00	40000.
10	3	1	3	0.550	0.150	0.03	11.60	40.30	0.0023	8.00	40000.
10	3	1	4	1.080	0.170	0.05	16.00	0.0	0.0061	8.00	40000.
10	3	2	1	1.440	0.200	0.07	0.0	169.00	0.0031	13.50	40000.
10	3	2	2	0.930	0.220	0.05	0.0	225.00	0.0028	13.50	40000.
10	3	2	3	0.750	0.190	0.03	12.00	109.00	0.0028	13.50	40000.
10	3	2	4	1.340	0.190	0.07	22.20	0.0	0.0081	13.50	40000.

REG.	B.T.	N.F.	SYS.	CAPITAL COST $/SQ FT	INSTALLATN COST $/SQ FT	ANNL O+M COST $/SQ FT	ANNL ELEC USE KWH/SQ FT	ANNL GAS USE CU FT/SQ FT	PEAK ELEC REQMT KW/SQ FT	DESGN COOL LOAD BTU/SQ FT	TYPICL BLD SIZE SQ FT
10	4	1	1	2.140	0.490	0.08	0.0	377.40	0.0048	16.00	40000.
10	4	1	2	2.330	0.500	0.08	0.0	439.50	0.0048	16.00	40000.
10	4	1	3	1.500	0.210	0.07	12.70	321.20	0.0048	16.00	40000.
10	4	1	4	1.460	0.350	0.07	85.70	0.0	0.0172	16.00	40000.
10	4	2	1	2.310	0.560	0.12	0.0	411.40	0.0072	27.50	40000.
10	4	2	2	2.590	0.580	0.12	0.0	516.80	0.0070	27.50	40000.
10	4	2	3	1.800	0.340	0.10	16.00	378.00	0.0070	27.50	40000.
10	4	2	4	1.650	0.410	0.10	96.80	0.0	0.0196	27.50	40000.
10	5	1	1	2.140	0.490	0.08	0.0	444.00	0.0048	16.00	40000.
10	5	1	2	2.330	0.500	0.08	0.0	517.00	0.0048	16.00	40000.
10	5	1	3	1.500	0.210	0.07	12.70	321.20	0.0048	16.00	40000.
10	5	1	4	1.460	0.350	0.07	85.70	0.0	0.0172	16.00	40000.
10	5	2	1	2.310	0.560	0.12	0.0	484.00	0.0072	27.50	40000.
10	5	2	2	2.590	0.580	0.12	0.0	608.00	0.0070	27.50	40000.
10	5	2	3	1.800	0.340	0.10	16.00	378.00	0.0070	27.50	40000.
10	5	2	4	1.650	0.410	0.10	96.80	0.0	0.0196	27.50	40000.
10	6	1	1	1.050	0.210	0.05	0.0	302.00	0.0065	18.80	100000.
10	6	1	2	1.060	0.230	0.05	0.0	299.00	0.0059	18.80	100000.
10	6	1	3	0.860	0.280	0.05	22.80	125.40	0.0059	18.80	100000.
10	6	1	4	0.960	0.180	0.05	33.30	0.0	0.0113	18.80	100000.
10	6	2	1	1.410	0.260	0.07	0.0	352.00	0.0076	26.00	100000.
10	6	2	2	1.290	0.280	0.07	0.0	433.00	0.0074	26.00	100000.
10	6	2	3	1.130	0.230	0.06	24.00	191.00	0.0074	26.00	100000.
10	6	2	4	1.300	0.220	0.06	38.70	0.0	0.0144	26.00	100000.
10	7	1	1	1.710	0.280	0.08	0.0	239.00	0.0061	15.40	40500.
10	7	1	2	1.090	0.300	0.06	0.0	221.00	0.0057	15.40	40500.
10	7	1	3	0.800	0.210	0.05	13.90	51.00	0.0061	15.40	40500.
10	7	1	4	1.480	0.220	0.07	21.90	0.0	0.0073	15.40	40500.
10	7	2	1	2.080	0.340	0.10	0.0	244.00	0.0072	24.70	40500.
10	7	2	2	1.340	0.360	0.08	0.0	285.00	0.0069	24.70	40500.
10	7	2	3	1.020	0.250	0.07	14.80	110.50	0.0074	24.70	40500.
10	7	2	4	1.820	0.270	0.09	23.50	0.0	0.0098	24.70	40500.
10	8	1	1	1.710	0.280	0.08	0.0	239.00	0.0061	15.40	40500.
10	8	1	2	1.090	0.300	0.06	0.0	221.00	0.0057	15.40	40500.
10	8	1	3	0.800	0.210	0.05	13.90	51.00	0.0061	15.40	40500.
10	8	1	4	1.480	0.220	0.07	21.90	0.0	0.0073	15.40	40500.
10	8	2	1	2.080	0.340	0.10	0.0	244.00	0.0072	24.70	40500.
10	8	2	2	1.340	0.360	0.08	0.0	285.00	0.0069	24.70	40500.
10	8	2	3	1.020	0.250	0.07	14.80	110.50	0.0074	24.70	40500.
10	8	2	4	1.820	0.270	0.09	23.50	0.0	0.0098	24.70	40500.
10	9	1	1	1.260	0.190	0.04	0.0	111.20	0.0021	10.20	43200.
10	9	1	2	0.730	0.190	0.04	0.0	122.20	0.0021	10.20	43200.
10	9	1	3	0.580	0.140	0.03	6.40	62.50	0.0021	10.20	43200.
10	9	1	4	1.210	0.200	0.04	16.10	0.0	0.0054	10.20	43200.
10	9	2	1	1.310	0.220	0.04	0.0	114.20	0.0024	12.00	43200.
10	9	2	2	0.770	0.190	0.04	0.0	155.20	0.0023	12.00	43200.
10	9	2	3	0.650	0.160	0.04	6.50	93.60	0.0023	12.00	43200.
10	9	2	4	1.280	0.210	0.04	18.00	0.0	0.0072	12.00	43200.

ORNL/CON-38
Dist. Category UC-95d

INTERNAL DISTRIBUTION

1. L. A. Abbatiello
2. M. Baker
3. R. S. Carlsmith
4. W. S. Chern
5-10. J. E. Christian
11. W. L. Cooper, Jr.
12. K. R. Corum
13. R. Craig
14. F. A. Creswick
15. G. A. Dailey
16. R. C. DeVault
17. R. D. Ellison
18. W. Fulkerson
19. R. E. Gant
20. V. O. Haynes
21-26. W. L. Jackson
27. M. A. Karnitz
28. J. O. Kolb
29. C. G. Lawson
30-35. R. S. Livingston
36. A. S. Loebl
37. H. M. Long
38. J. D. Mason
39. J. W. Michel
40. W. R. Mixon
41-46. G. D. Pine
47. T. H. Row
48. G. Samuels
49. I. Spiewak
50. J. S. Tatum
51-55. J. C. Taylor
56. D. J. Wilkes
57. Biology Division
58-59. Central Research Library
60. Document Reference Section
61-158. Energy Information Library
159. Laboratory Records (RC)
160-162. Laboratory Records Dept.
163. ORNL Patent Section
164-166. Technical Publications Dept.

EXTERNAL DISTRIBUTION

167. P. Bolan, United Technologies Corporation, P.O. Box 107, South Windsor, CT 06074
168. J. Brown, United Technologies Corporation, P.O. Box 107, South Windsor, CT 06074
169. J. Cuttica, DOE, 20 Massachusetts Ave., NW MS-2221C, Washington, DC 20545
170. N. R. Friedman, Mathtech, Inc., Suite 2960, 475 L'Enfant Plaza West, Washington, DC 20024
171. V. B. Fiore, Gas Research Institute, 3424 South State Street, Chicago, IL 60616
172. D. Glenn, Institute of Gas Technology, 3424 South State Street, I.I.T. Center, Chicago, IL 60616
173. J. Gracia, Department of Energy, Oak Ridge Operations, Oak Ridge, TN 37830
174. Howard Hagler, Hagler, Bailly, and Co., 2020 K Street NW, Suite 350, Washington, DC 20036
175. Lester Harry, Department of Energy, Division of Fossil Fuel Utilization, Mail Stop E-178, Washington, DC 20545
176. R. Johnson, Department of Energy, 20 Massachusetts Avenue, NW, Washington, DC 20545

177. Robert King, NASA Lewis Research Center, 21000 Brookpark Road, Cleveland, OH 44135
178. L. Koppelman, MCI Communications, 1150 17th St., NW, Washington, DC 20036
179. R. Lang, California Energy Commission, 1111 Howe Avenue, Sacramento, CA 95825
180. Dr. Sam Nelson, Energy Systems Research Group, Inc., 132 State Street, Albany, NY 12207
181. Mr. Joseph A. Orlando, GKCO Consultants, P.O. Box 23757, L'Enfant Plaza Station, Washington, DC 20024
182. J. C. Rodousakis, Department of Energy, Division of Buildings and Community Systems, Washington, DC 20545
183. I. Sewell, DOE, Division of Buildings and Community Systems, 20 Massachusetts Avenue, NW, Washington, DC 20545
184. R. Shanker, Hagler, Bailly, and Co., 2020 K Street NW, Suite 350, Washington, DC 20036
185. P. F. Swenson, Consolidated Natural Gas Service Company, Research Department, 11001 Cedar Avenue, Cleveland, OH 44106
186. Mr. Gary E. Voelker, DOE Fossil Energy Programs, MS E178, Germantown, Washington, DC 20545
187. K. Vora, Resource Planning Associates, Inc., 44 Brattle Street, Cambridge, MA 02138
188. P. Wilson, Resource Planning Associates, Inc., 44 Brattle Street, Cambridge, MA 02138
189. J. Winder, McKinsey and Company, Inc., 1700 Pennsylvania Avenue, Washington, DC 20006
190. Assistant Manager for Energy Research and Development, DOE-ORO, Oak Ridge, TN 37830

191-464. Given distribution as shown in TIC-4500 under UC-95d, Energy Conservation — Buildings and Community Systems (25 copies-NTIS)

465-794. External Energy Conservation Distribution Mailing List

☆U.S. GOVERNMENT PRINTING OFFICE: 1980-640-245/168

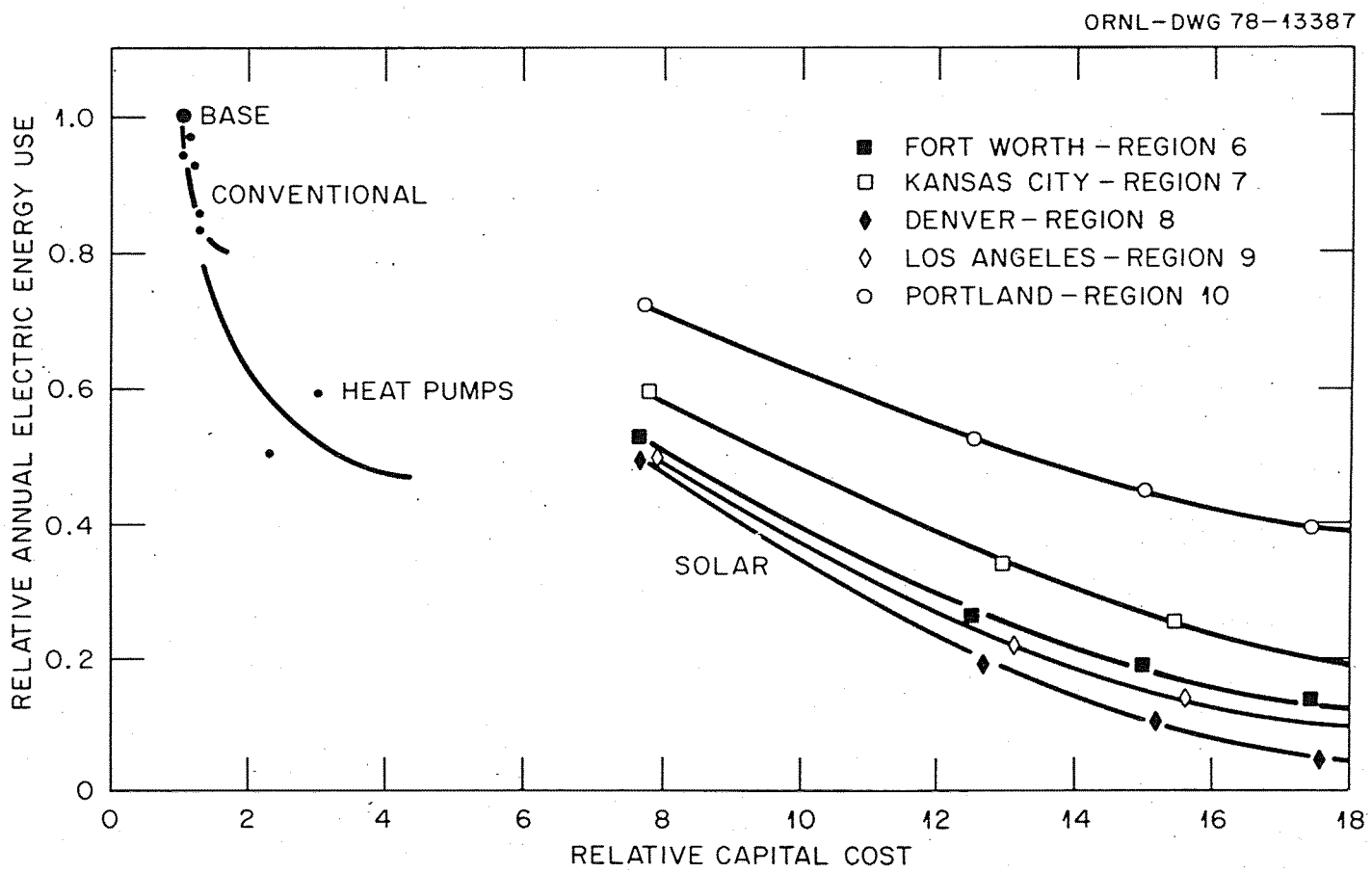
ORNL-DWG 78-13387
RELATIVE ANNUAL ELECTRIC ENERGY USE
1.0
0.8
0.6
0.4
0.2
0
BASE
CONVENTIONAL
HEAT PUMPS
SOLAR
FORT WORTH - REGION 6
KANSAS CITY - REGION 7
DENVER - REGION 8
LOS ANGELES - REGION 9
PORTLAND - REGION 10
0
2
4
6
8
10
12
14
16
18
RELATIVE CAPITAL COST

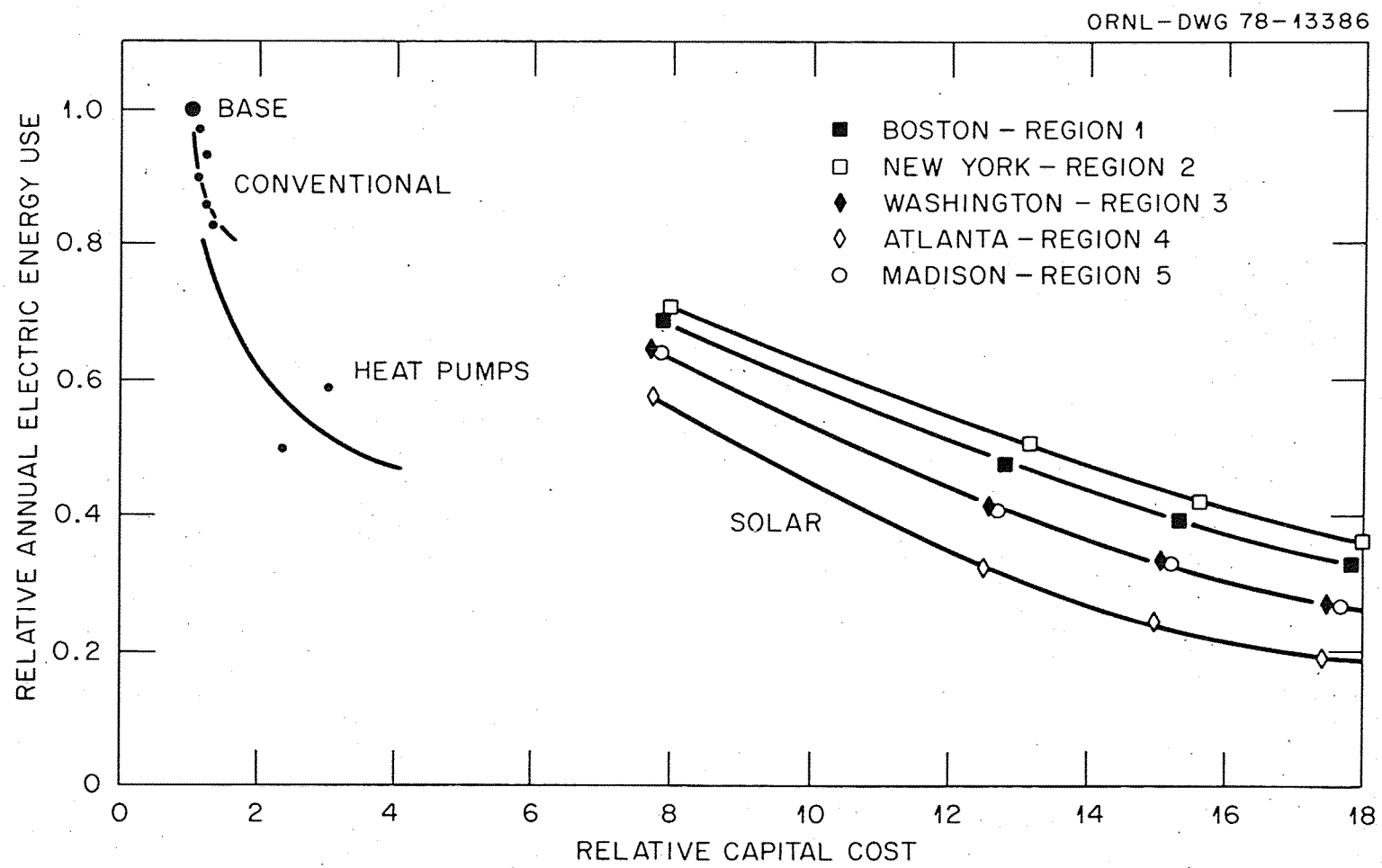
ORNL-DWG 78-13386
RELATIVE ANNUAL ELECTRIC ENERGY USE
1.0
0.8
0.6
0.4
0.2
0
BASE
CONVENTIONAL
HEAT PUMPS
SOLAR
BOSTON - REGION 1
NEW YORK - REGION 2
WASHINGTON - REGION 3
ATLANTA - REGION 4
MADISON - REGION 5
0
2
4
6
8
10
12
14
16
18
RELATIVE CAPITAL COST