Proceedings of IMECE04
2004 ASME International Mechanical Engineering Congress and Exposition
November 13-20, 2004, Anaheim, California USA

IMECE2004-60801

SECOND GENERATION INTEGRATED COMBINED HEAT AND POWER ENGINE GENERATOR AND LIQUID DESICCANT SYSTEM

Sandeep Nayak
University of Maryland, College Park, MD, U.S.A.

Sumit Ray
DTE Energy Technologies Inc., Farmington Hills, MI, U.S.A.

Reinhard Radermacher
University of Maryland, College Park, MD, U.S.A.

ABSTRACT

The Combined Heat and Power (CHP) concept is aptly suited to improve or eliminate some of the global and local issues concerning electric commercial buildings. CHP involves on-site or near-site generation of electricity by using gas-fired equipment along with utilization of thermal energy available from the power generation process. CHP has the potential of providing a 30% improvement over conventional power plant efficiency and a CO_2 emissions reduction of 45% or more. In addition, an overall total system efficiency of 80% can be achieved because of the utilization of thermal energy, that would otherwise be wasted, and the reduction of transmission, distribution and energy conversion losses. CHP technology also makes cost savings possible by reducing high summertime electrical demand charges while at the same time providing necessary space heating and cooling. Savings are further increased in applications where waste heat can replace electric heating. Moreover, CHP has the ability to address indoor air quality issues when utilizing a desiccant dehumidifier by providing direct humidity control and consequently reducing the potential for mold and bacteria development. Because power generation is done on-site, CHP provides control in meeting a building's electrical needs and also provides an increased level of reliability to ensure high employee productivity.

The current research is being carried out in a four – story commercial office building that has been established as the CHP research and demonstration facility on the campus of the University of Maryland in College Park, MD, USA. The 52,700 square feet administrative building includes two heating, ventilating and air-conditioning (HVAC) zones of equal area where zone 1 includes the first and second floors and zone 2 includes the second and third floors. This has facilitated the installation of two different CHP systems for the two zones. The research in this paper discusses about the CHP system catering to zone 1.

This paper describes a second generation CHP system involving the integration of a new 75 kW commercial engine generator with the existing liquid desiccant system. The engine generator is connected parallel to the grid for supplying 75 kW of electrical power to the building while the combined waste heat recovered from the exhaust gases as well as the jacket water from the engine is used to heat a 50:50 ethyl glycol – water loop through a packaged heat recovery system. This recovered heat is then used for the regeneration of the lithium chloride solution in a liquid desiccant system and the ethyl glycol – water solution is returned back to the engine. The liquid desiccant system reduces the latent load of the ventilation air entering the roof top unit. Technical challenges concerning electrical and control aspects that were related to modifications of the original CHP system are described and improvements to the original system design and performance are evaluated. The paper then discusses the experimental results obtained with first generation CHP system and its overall performance.

KEYWORDS

CHP, engine, desiccant, integration, heat.

INTRODUCTION

The Combined Heat and Power (CHP) initiative was started in March of 1999 by the U.S. Department of Energy (DOE) in cooperation with industry leaders representing manufacturers, utilities, building operators, research-and-development organizations, industry associations, energy-service companies, engineers, universities, and national laboratory personnel. In general, CHP seeks to improve the indoor environment, conserve resources, and reduce emission rates and improve reliability through energy-system integration. CHP also avoids power–line losses, recycles waste heat, and uses new, energy-efficient equipment that can lead to building energy systems that put to work 80% of the purchased fuel going into the system [1]. CHP involves on-site or near-site

Copyright © 2004 by ASME

generation of electricity by using gas-fired equipment along with utilization of thermal energy available from the power generation process. There are many possible uses for the waste heat in a commercial building, depending upon geographic location, occupant requirements and the energy cost structures of both fuel and grid electricity. Possible waste heat technologies include absorption chillers, humidifiers, desiccant dehumidifiers, steam generators, hot water heating, space heating and thermal storage. CHP has the potential of providing a 30% improvement over conventional power plant efficiency and a CO_2 emissions reduction of 45% or more. In addition, an overall total system efficiency of 80% can be achieved because of the utilization of thermal energy, that would otherwise be wasted, and the reduction of transmission, distribution and energy conversion losses [10]. CHP technology also makes cost savings possible by reducing high summertime electrical demand charges while at the same time providing necessary space heating and cooling. Savings are further increased in applications where waste heat can replace electric heating. Moreover, CHP has the ability to address indoor air quality issues when utilizing a desiccant dehumidifier by providing direct humidity control and consequently reducing the potential for mold and bacteria development. Because power generation is done on-site, CHP provides control in meeting a building's electrical needs and also provides an increased level of reliability to ensure high employee productivity.

This paper reports CHP related research being carried out in a four – story commercial office building that has been established as the CHP research and demonstration facility on the campus of the University of Maryland in College Park, MD, USA. The paper discusses the design of a CHP system consisting of a 75 kW commercial engine generator as a prime mover whose waste heat is utilized in a liquid desiccant system. The paper then proceeds to describe the various challenges faced during the integration of this equipment throwing light on issues such as heat recovery, controls and electrical interconnection. The paper then discusses the experimental results obtained with first generation CHP system and its overall performance.

NOMENCLATURE

CHP = Combined Heat and Power
EDAC = Engine driven air conditioning units
LDU = Liquid desiccant unit
RTU = Roof top unit

DEMONSTRATION FACILITY BUILDING

The Chesapeake building is a representative commercial office building on the campus of the University of Maryland and is well suited to demonstrate the benefits of CHP technology. The physical size of the Chesapeake building, 4700 m^2 (50,000 ft^2) puts it into a medium size office building category (10,000-100,000 ft^2). This category represents 23% of all buildings and comprises 46% of the total floor space in the US. The four-story Chesapeake Building houses several university administrative offices including the Payroll Department, the Environmental Safety Department, the Purchasing Department and the Personnel Department. The Chesapeake building was chosen to become a demonstration facility for CHP technology because it features some ideal characteristics that make it a good candidate.

First, the building was built in a relatively remote location – on the edge of a very large university campus. The remote location helps to reinforce and demonstrate the idea of distributed on-site power generation. Since it is remotely located, the building is far away from the campus central heating and cooling plant, which makes it more difficult and more costly to provide steam or chilled water to the building. Therefore the building was designed to have cooling provided by electric Roof Top Units (RTU) and heating provided by variable air volume (VAV) electric reheat coils, thus making it an electric building. The Chesapeake building also has a natural gas supply readily available, which makes the installation of CHP components more feasible and less costly [6].

Original Mechanical Equipment

The Chesapeake building has two air conditioning zones comprising of two floors each. Both air conditioning zones are supplied with conditioned air from their own packaged Roof Top Unit (RTU) that use a vapor-compression cycle to provide up to 160 kW (45 tons) of cooling each. Both units dehumidify by cooling the air below its dew point and their supply air temperature set point is 13°C (55°F) [2]. The supply air is distributed with Variable Air Volume (VAV) boxes that modulate air volume distribution throughout the zone based on wall- mounted thermostats, adjusted by the building occupants. Electric reheat within these VAV boxes provide localized heating when required. The core of the building requires cooling all year round and the supply air must be kept at a level where cooling can be provided to all areas of the building.

The RTU is a commercial unit equipped with an economizer cycle. Figure 1 shows a schematic of the unit. The outside and return air is mixed in the mixed air section before the 90-ton DX interlaced coil. The coil is part of two refrigeration systems of equal capacity with their condenser units located at the right end of the unit as is seen from Fig. 1.

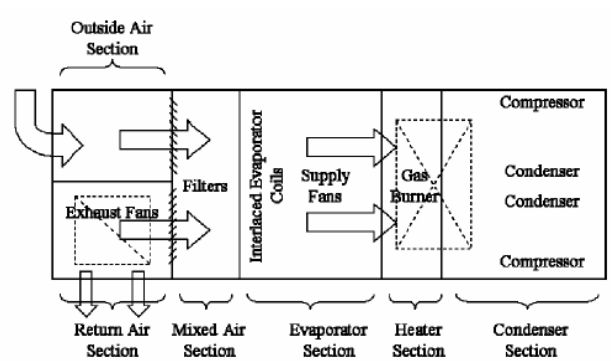

Figure 1: Schematic Diagram of the Roof Top Unit.

Copyright © 2004 by ASME

Each RTU consists of two R-22 electric-driven compressors cooling air through an interlaced coil. Each compressor utilizes a cylinder unloader on one of its two cylinders to obtain two stages of cooling, making four stages in total for each RTU. Fine capacity control is achieved with hot gas bypass. A gas burner is also included after the direct expansion (DX) coil, but the combination of climate and building design hardly ever calls for any additional heat to be added to the supply air.

Both RTU's use an economizer cycle that mixes outdoor air with return air when outdoor air conditions are such that this can provide the necessary cooling. When the economizer is used, large volumes of air need to be extracted from the building rather than recirculated and the exhaust fans are used for this purpose.

FIRST GENERATION CHP SYSTEM

The old or first generation CHP system labeled as CHP system 1 since it catered to HVAC zone 1 of the building is shown in Fig. 2.

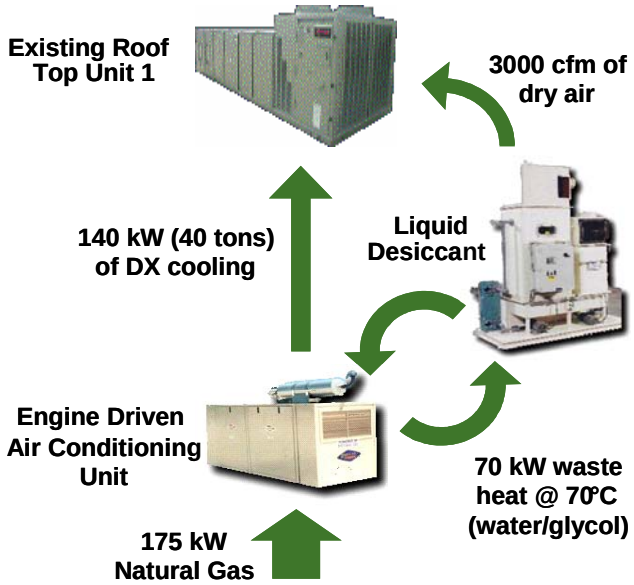

Figure 2: Schematic Layout of First Generation CHP System 1 with EDAC and Liquid Desiccant System.

This CHP system was built in 2001 and was in operation until the year 2003. It consisted of a pair of engine driven air conditioning units that drove conventional R-22 refrigeration compressors to provide cooling to a Direct Expansion (DX) coil retrofitted into RTU1, as well as a liquid desiccant system that utilized waste heat recovered from the two engines to dehumidify outdoor air for mixing in the RTU mixed air chamber instead of untreated outdoor air.

While this system was labeled as CHP System 1, it actually produced no electrical power, but waste heat was recovered from a prime mover, in this case the natural gas engines, to provide heat for the liquid desiccant system. Both the Engine Driven Air Conditioning (EDAC) units and the Liquid Desiccant Unit (LDU) consumed electricity in their operation. The EDAC units consumed electricity for controls and condenser fan operations whereas the LDU had substantial electrical consumption to run pumps, fans, controls as well as the associated cooling tower required for its operation to cool the concentrated desiccant medium after regeneration.

The EDAC units were the prime movers in CHP System 1, each consisting of a 1.8 liter engine combusting natural gas to provide mechanical work to drive a R-22 refrigeration compressor. The compressed refrigerant was then cooled in the condenser section of the EDAC units and the cooling provided to the mixed air stream after the expansion valve inside a DX coil retrofitted into the mixed air chamber of RTU1 before the original cooling coil. The original cooling coil supplemented cooling capacity not delivered by the CHP system to maintain a constant supply air temperature of 13°C (55°F).

The heat was recovered from the two EDAC units from two sources – the low temperature engine jacket cooling water and the high temperature exhaust gases from the engine. Two custom heat exchangers were installed on each engine to perform this heat recovery.

The dilute solution of LiCl in the LDU was heated in a plate and frame heat exchanger with the heat recovery fluid, which was a 50/50 mixture of water and glycol. Since the heat recovery loop came into contact with the engine cooling water through the engine jacket water heat exchanger the heat dump radiator was a necessary item to be included since a return temperature in excess of the engine operating temperature would warm the engine rather than cooling it with potentially serious consequences on the performance and life expectancy of the EDAC units. The return temperature was monitored using an immersion thermocouple in the heat recovery loop fluid after the heat dump radiator and the proportion of fluid passing through the radiator modulated by a hydraulically actuated valve. This was particularly useful during periods when the EDAC units need to be run while the LDU was not in operation and not removing heat from the heat recovery fluid.

Liquid Desiccant System

Indoor air quality (IAQ) problems related to humidity and ventilation can be improved using dehumidification systems. The Chesapeake building was designed to provide thermal comfort for its occupants, but does not provide direct humidity control. There have been complaints of high humidity in the summer months and very dry conditions during the winter months from building occupants. A desiccant regeneration BCHP system can provide the needed humidity control directly and address some of the IAQ issues. Also, the control of outside air delivery to the building is limited by outside air damper position. With only damper position control it is uncertain how much air is actually being provided because there is always a difference between building pressure and outside air pressure. Too much air leads to ineffective electricity use and too little air contributes to IAQ problems.

Copyright © 2004 by ASME

These issues were addressed during the integration of the liquid desiccant system.

The liquid desiccant system installed at the Chesapeake building operates on waste heat and is designed to handle 5 x 10^{-5} m^3/s (3000 cfm) of outside air that it supplies to the mixed air section of Roof Top Unit 1 (RTU 1). The processed desiccant air is added directly into the mixed air section while the damper from the outdoor air section of the RTU is completely closed. The liquid desiccant system also utilizes the building air that is exhausted as the fresh outdoor air is drawn in for heat exchange since the return air is both cooler and drier than the outdoor air. This exhaust air is drawn from the return air section of the RTU through ducting that was retrofitted onto each RTU. The design moisture removal rate of the liquid desiccant unit is 1.86 x 10^{-2} kg/s (148 lb/hr).

The liquid desiccant is a water solution of LiCl, a hygroscopic salt as its working fluid and has regeneration, conditioning and cooling tower components. Figure 3 shows a schematic of the liquid desiccant unit at the Chesapeake building.

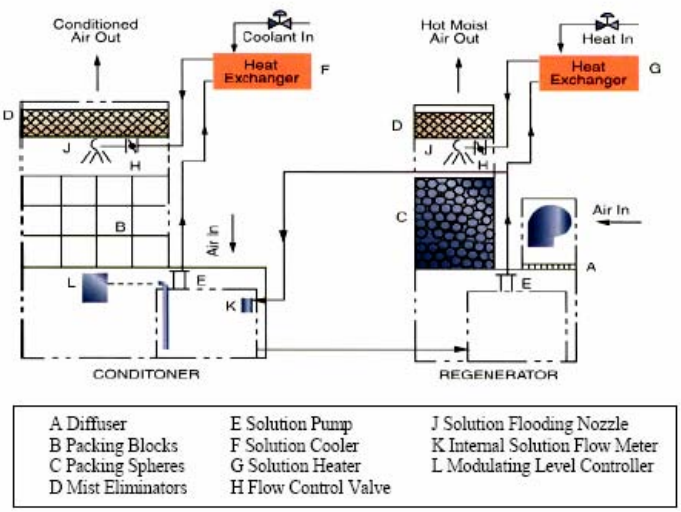

Figure 3: Schematic of the Liquid Desiccant System at the Chesapeake Building [3].

The waste heat provided to the liquid desiccant unit provides the heating to regenerate or concentrate the LiCl solution. The return air from the building, which must be withdrawn to replace the fresh air added to the building, is used to provide the cooling. Outdoor air could have been used for this application, but having an available stream of much cooler air allows the LiCl solution to be cooled down much further than would be possible with outdoor air. The end result is process air that is both cooler and less humid than outdoor air.

The use of building exhaust air in this desiccant unit is for heat exchange only – since the cooling tower runs on an open loop of water the building exhaust air does not come into direct contact with the desiccant material. This means that the reduced absolute humidity of the building exhaust air is not directly available to the system as it could be if it were able to be used in a direct contact heat exchange with the working fluid, however it can be utilized indirectly since it has a lower wet bulb temperature as well.

The LDU consumes 9.5kW of electrical power to run pumps, fans as well as its associated cooling tower and controls.

First Generation CHP System Issues

During the operation of the EDAC units and the liquid desiccant unit it was found that there is a mismatch of the thermal loads between the two systems. The total amount of waste heat recovered from the exhaust gas and jacket water heat exchangers from both EDAC units was 42 kW (143,000 Btu/hr) while the design heat requirement of the liquid desiccant system is 104 kW (355,000 Btu/hr). Also the waste heat supplied by the engines was at a lower temperature than the design specification of the liquid desiccant unit. Typical supply temperature range for the liquid desiccant is 88 – 73°C (190 – 163°F) while the waste heat supplied by the two EDAC units was in the temperature range of 63 - 55°C (145 – 131°F). Thus the designed performance of the liquid desiccant system could not be achieved due to inadequate heat supply which is explained later. In addition, frequent refrigerant leaks were a maintenance issue with the EDAC units [4].

SECOND GENERATION CHP SYSTEM

In order to meet the design heat requirements of the liquid desiccant system, the two EDAC units are currently being replaced by a single 75 kW natural gas engine generator combined with a packaged heat recovery system. Figure 4 describes schematically the integration of this new engine generator with the existing liquid desiccant unit.

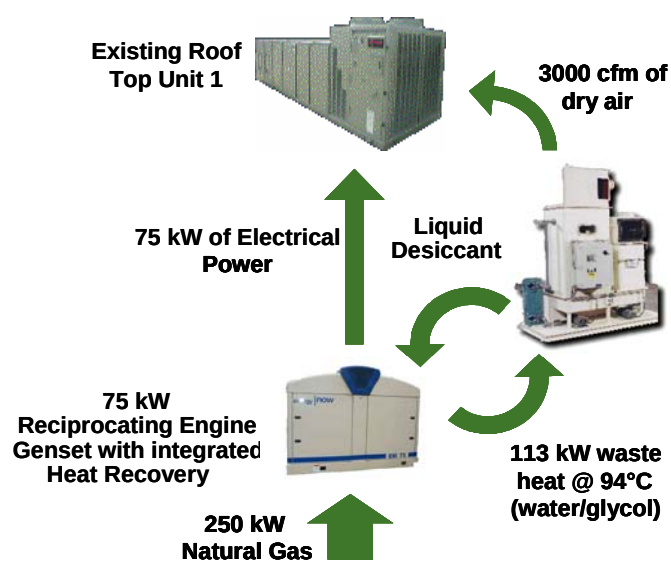

Figure 4: Schematic Layout of Second Generation CHP System 1 with Engine Generator and Liquid Desiccant System.

Copyright © 2004 by ASME

The engine block, generator and the controller form the main components of the new engine generator package. The 4.3 liter cast iron engine block has six cylinders arranged in a V shape with three cylinders in each bank. Coolant jackets encircle the cylinders. The engine is equipped with a turbocharger as well as an intercooler. The engine rpm of 2540 rpm is reduced to 1800 rpm to the generator by a mechanical device called the speed reducer. The generator is a 3 phase, 60 Hz, continuous duty synchronous type with output voltages of 120/208 volts and 277/480 volts [5].

Figure 5 shows the design specifications on the thermal side of the heat recovery package for the engine generator.

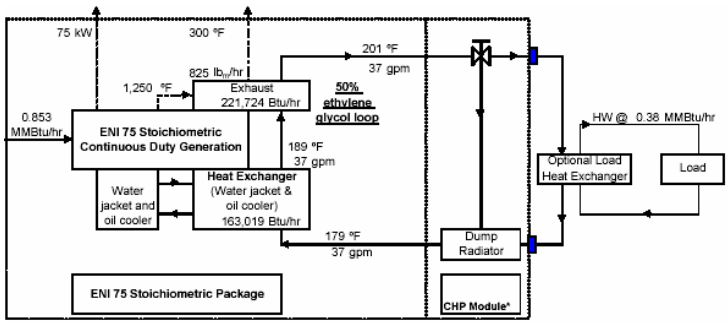

Figure 5: Thermal Recovery Package of the 75 kW Engine Generator [5].

It can be seen from fig. 5 that the engine burns about 250 kW (853,000 Btu/hr) of natural gas to produce 75 kW of electrical power which will be supplied to the Chesapeake building. The exhaust gas leaving the engine at a high temperature of 677ºC (1250ºF) then enters a heat exchanger where it exchanges heat with the ethylene glycol solution (50:50). The amount of heat recovered from the exhaust gases is around 65 kW (222,000 Btu/hr) while the waste heat recovered from the water jacket and oil cooler heat exchanger is about 48 kW (163,000 Btu/hr). Thus the ethylene glycol solution gets heated to 87ºC (189ºF) when it first passes through the water jacket and oil cooler heat exchanger and is finally heated to 94ºC (201ºF) after utilizing the exhaust gas heat. This heat is then used in the regenerator of the liquid desiccant system (this part is shown as optional load heat exchanger in fig. 5) before it is returned back to the engine at 82ºC (179ºF). A three-way control valve directs any excessive heat to the dump radiator which though a separate heat exchanger module, is a part of the heat recovery loop.

Thus comparing with the design heat requirement of the liquid desiccant unit of 104 kW (355,000 Btu/hr), the total waste heat recovered from both the exhaust gases and jacket water heat exchangers of the engine generator is around 113 kW (385,000 Btu/hr). Also this heat is supplied to the liquid desiccant system at 94ºC (201ºF). Hence it can be concluded that there exists a pretty good thermal match between the new engine generator and the liquid desiccant system.

SYSTEM DESIGN AND UPGRADES

Various modifications and upgrades in terms of structural design, thermal design and controls were required during the transition from old to the new CHP system. This section underlines these different upgrades explaining in detail the issues and challenges.

Structural Design

As discussed in the earlier section, the new engine generator along with the heat recovery loop consisting of the two heat exchangers and the pump comes in a single packaged unit. The weight of this unit is 2812 kg (6200 lbs) while the dump radiator module weighs around 907 kg (2000 lbs) which puts the total weight of the entire package at 3719 kg (8200 lbs) making it quite heavy. Three different options existed for the installation of this engine generator package. The first option was to mount the engine generator and dump radiator module on the roof on the same structural platform on which the EDAC units were installed. This structural frame that was previously designed by a structural firm however was designed to handle a maximum load of 2268 kg (5000 lbs). Second option was to mount the engine generator package on the same structural platform as the liquid desiccant and solid desiccant systems. The combined weight of these two desiccant units is around 5443 (12000 lbs) while the structure was able to support a payload of 6804 kg (15000 lbs) at the most. Thus both the options required additional structural reinforcement to sustain the weight of the new engine generator package safely. The third and the last option were to install the engine generator and the dump radiator module on the ground. However this meant that the heat recovery piping for the ethyl glycol solution would have to be run through four floors to the roof since the liquid desiccant unit was already mounted on the roof. This would result in high heat loss in the long pipelines and the amount of heat finally supplied to the liquid desiccant unit might again fall short of its design conditions. Moreover the ethylene glycol solution pump in the heat recovery loop of the engine generator is a 1.5 kW (2 hp) pump and can handle a maximum of 9.1 m (30 feet) of head and hence would require a booster pump or another pump in series to pump the ethylene glycol solution all the way up to the roof.

Weighing all the three options, it was finally decided to settle for the second option to reinforce the desiccant unit platform for a couple of reasons. Firstly, the design cost of the desiccant unit platform was lower than the EDAC structural frame. Secondly, since all the three components of the new CHP system 1 viz; engine generator, dump radiator and liquid desiccant system would on the same platform, the piping required between them would be at the minimum avoiding huge pipe heat losses as well as allowing to use single available solution pump. The design analysis was done by a structural engineering consultant and nine additional beams were welded at locations specified in the design as part of the reinforcement [4].

Copyright © 2004 by ASME

Design of Heat Recovery Loop

This section discusses the design of the heat recovery loop which is critical to the safe operation of the engine generator as well as the liquid desiccant system. It can be seen from Fig. 5 that the flow rate of the ethyl glycol solution supplied from the engine generator is 2.3 x 10^{-3} m^3/s (37 gpm). However, the regenerator plate and frame heat exchanger of the existing liquid desiccant system is designed to handle a flow rate of only 1.9 x 10^{-3} m^3/s (30 gpm). This would have required modifying the liquid desiccant system to cope with more flow by increasing the number of plates of the plate and frame heat exchanger of the regenerator section. Also, the current pressure drop on the glycol side of the plate and frame heat exchanger of the regenerator is 33 kPa (4.8 psi) while according to the requirements specified by the engine generator manufacturer, the maximum pressure drop needs to be within 19 kPa (2.7 psi). To keep the modifications to the existing equipment at a minimum and at the same time achieve the desired performance, a new heat recovery loop was designed. The schematic diagram of this heat recovery loop between the engine generator and the liquid desiccant unit is shown in Fig.6.

It can be seen that the return temperature of the ethyl glycol solution to the engine is set at 82ºC (179ºF). This is a critical parameter and this temperature should never go below 82ºC (179ºF), otherwise there is a possibility of running the engine too cold and eventually damaging the engine. On the other hand the liquid desiccant unit accepts or rejects heat based on the level of LiCl solution in the regenerator. At reduced moisture loads the regenerator cannot use all the heat that the engine supplies it with and care needs to be taken to see that the unit does not over regenerate, otherwise it would result in crystallization of the LiCl solution when the outside air humidity falls below design. Hence the controls of the heat recovery loop are based on the liquid level in the regenerator and the inlet temperature of the ethylene glycol solution to the dump radiator. This temperature would always be maintained at 83ºC (182ºF) since the solution would suffer some temperature drop as it passes through the dump radiator and the return temperature can still be maintained at 82ºC (179ºF).

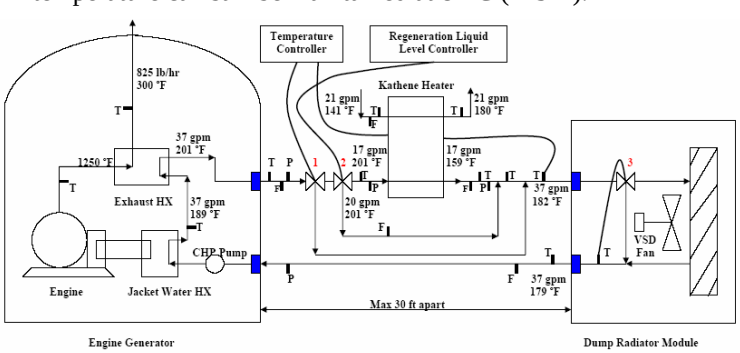

Figure 6: Heat Recovery Loop for Second Generation CHP System 1.

The heat recovery loop schematic in Fig. 6 shows three valves that are used to control the two control points described above. Valve 1 is a 3-way modulating valve and modulates the 2.3 x 10^{-3} m^3/s (37 gpm) flow based on the inlet temperature to the dump radiator, which is maintained at 83ºC (182ºF). Thus during the initial start up, all the flow is bypassed to the dump radiator until 83ºC (182ºF) is reached, after which it allows flow through the liquid desiccant system. Valve 2 is a 3-way control valve already installed for the liquid desiccant system. It modulates the flow through the regenerator heat exchanger based on the regeneration liquid level. So when the liquid desiccant unit does not require heat, this valve bypasses the regenerator and all the flow goes to the dump radiator. When the liquid desiccant requires heat, valve 2, at maximum opening will allow 1.1 x 10^{-3} m^3/s (17 gpm) at 94ºC (201ºF) to flow through the regenerator heat exchanger while the remaining 1.3 x 10^{-3} m^3/s (20 gpm) of flow at 94ºC (201ºF) passes through a bypass line to the inlet of the dump radiator where it combines with the 1.1 x 10^{-3} m^3/s (17 gpm) solution leaving the liquid desiccant unit at 70.5ºC (159ºF) during steady state conditions. Thus 2.3 x 10^{-3} m^3/s (37 gpm) of flow is maintained to the dump radiator at 83ºC (182ºF). Valve 3 is the 3-way control valve, which modulates the flow across the dump radiator based on the return temperature to the engine and maintaining it at 179ºF and would be supplied with the dump radiator module. Thus with this design, the maximum pressure drop in regenerator heat exchanger on glycol side will be 9 kPa (1.3 psi) under the above conditions which is well within the specified requirements of the engine manufacturer of 19 kPa (2.7 psi) [4].

Electrical Interconnections

Though the engine generator model can be either connected parallel to the grid or used as stand alone generator, for the current application it will be connected parallel to the grid at the Chesapeake building. Figure 7 shows the single line drawing of the engine generator being connected parallel to the grid through a utility interface controller.

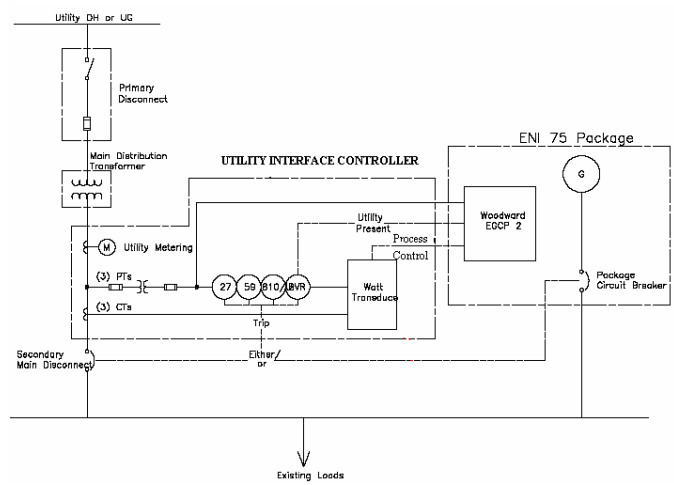

Figure 7: Utility Interface Controller Schematic [5].

Copyright © 2004 by ASME

As can be seen from Fig. 7 the utility interface controller package forms the connecting link between the engine generator and the electrical grid. It consists of the different types of protective relays to monitor and protect the generator from over and under voltage and over and under frequency. These relays are connected to the microprocessor based wood ward controller inside the engine generator. Thus when the grid is running, the engine generator would be supplying 75 kW of electrical power to the grid and hence the building will be drawing 75 kW less power from the utility, thus saving in utility electrical costs.

However when the grid goes down as would happen in a power outage scenario, the trip signal would be sent from the relays in the utility interface controller to the circuit breaker inside the generator that would disconnect the generator from the building. This is necessary since the engine generator is not designed to support the entire electrical load of the building which is around 200 kW on an average.

The bus bar in the Chesapeake building on which the new engine generator was to be connected in parallel already had a 60 kW micro turbine connected also in parallel to the grid. Thus several interconnection issues needed to be solved in this case such as the capability of the existing switchboard to handle two generators connected in parallel, feasibility of running both the micro turbine and the engine generator at the same time without either equipment interfering with the other generator's operation, back feeding the grid at any point of time etc. All of these issues were resolved together with the university facilities, the utility, switchboard supplier and both equipment manufacturers.

DISCUSSION OF RESULTS

Results from data recorded during the operation of the EDAC units and liquid desiccant system is discussed in the following section. Figure 8 shows the temperatures recorded for the heat recovery loop which is useful in determining the heat addition at the different stages.

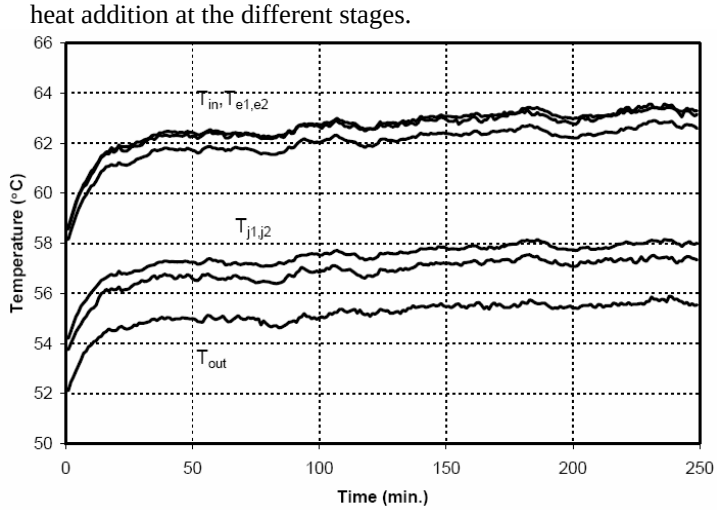

Figure 8: Heat Recovery Loop Temperatures of First Generation CHP System 1 [2].

In Fig. 8 the lowest temperature on the heat recovery loop is the exit temperature from the LDU heat exchanger (T_{out}) the next two temperatures (because there are two engines) are the temperatures after the engine jacket water heat exchangers ($T_{j1,j2}$) and the three temperatures at the top of the plot are the outlet temperatures of the exhaust gas heat exchangers as well as the inlet temperature to the LDU ($T_{j1,j2}$ + T_{out}), these temperature sensors are measured separately due to the length of insulated tubing that the heat recovery loop has to run through between the exit to the exhaust gas heat exchangers and the inlet to the LDU heat exchanger. It can be seen from Fig. 8 that there are few significant differences between the two exit temperatures and the inlet temperature. The differences between the two exit temperatures from the engine jacket water heat exchangers ($T_{j1,j2}$) could be explained by differences in engine operating temperatures between the two EDAC units. When combined with the heat recovery loop flow rate these temperatures can be translated into heat flow rates.

Table 1 shows that the actual amount of recovered heat is less than half the amount that the LDU requires to function effectively and the temperature of the waste heat provided is also too low.

Table 1: Characteristics of Heat Recovery Loop of First Generation CHP System 1 [2].

Description	Measured Value	Design Value
Waste heat collected from two engine jacket heat exchangers	11 kW (38,000 Btu/hr)	45 kW (154,000 Btu/hr)
Waste heat collected from two exhaust gas heat exchangers	31 kW (106,000 Btu/hr)	45 kW (154,000 Btu/hr)
Total waste heat recovery	42 kW (143,000 Btu/hr)	90 kW (308,000 Btu/hr)
Typical temperature range for LDU supply	63 – 55 ºC (145 – 131 ºF)	88 – 73 ºC (190 – 163 ºF)

The most dominant characteristic of the operation of the LDU in first generation CHP System at the Chesapeake building was the undersupply of waste heat through inadequate heat recovery from the EDAC units. Based on the natural gas consumption of the EDAC units, to supply the LDU's design heat input would require heat recovery from all waste heat streams with 80% effectiveness from each engine. This is approximately the effectiveness of a simple boiler which has the advantage of much greater temperature differences to drive heat transfer than exists either in the exhaust gases of the engine and particularly in the engine jacket water heat exchangers. From Figure 8 it is apparent that one quarter of the collected waste heat is captured in the engine jacket water heat exchangers and three quarters is extracted from the exhaust gas heat exchangers when in the design stages it was anticipated

Copyright © 2004 by ASME

that the heat from each source would be equivalent. The total waste heat recovery was insufficient in this configuration.

The cooling provided by the liquid desiccant system can be looked at from two perspectives, firstly the total cooling (enthalpy reduction) provided by the LDU and also in terms of the latent cooling alone. Figure 9 shows the operation of the liquid desiccant unit on a psychrometric chart where it is seen that the outside air is dehumidified as well as cooled down before it is supplied to the mixed air section of roof top unit 1 of the Chesapeake building [2].

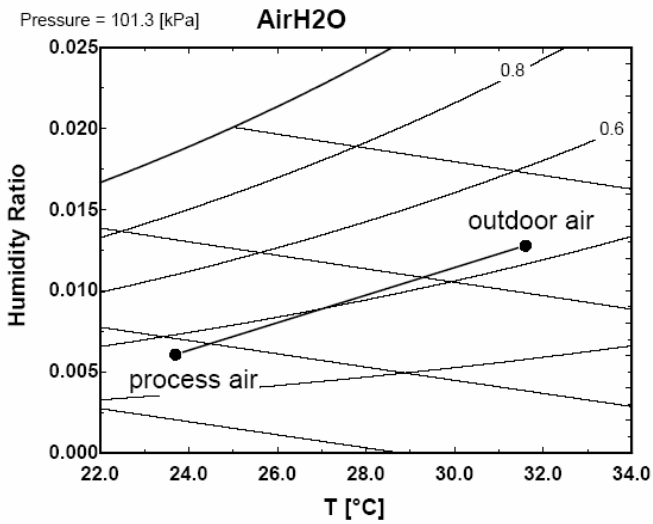

Figure 9: Psychrometric Plot of Liquid Desiccant System Operation.

Figure 10 shows the amount of heat input currently supplied to the liquid desiccant system from the waste heat recovered from the EDAC units and the latent cooling and total cooling capacity delivered by the LDU in the current operation.

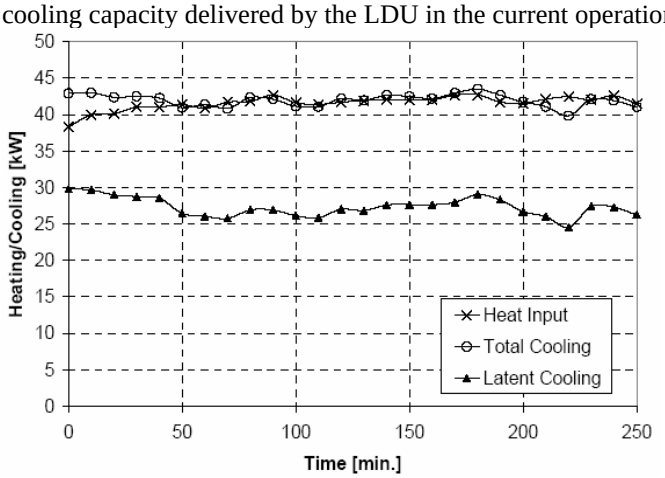

Figure 10: Heat Input, Total Cooling and Latent Cooling Capacity for Liquid Desiccant Unit [2].

Thus from Fig. 10 it can be found that the amount of total cooling produced by the liquid desiccant unit is around 42 kW (12 tons) when operating in first generation CHP system 1. However it is expected that this cooling capacity would be much closer to the design value of 90 kW in the second generation CHP system 1 owing to enough waste heat available from the new engine generator.

CONCLUSION

The paper has discussed at length the different challenges and issues faced during the integration of a 75 kW natural gas driven engine generator with a liquid desiccant system. It was found that two levels of control viz; one based on temperature and the other on liquid level were essential in the design of the heat recovery loop in order to operate safely both the engine generator and the liquid desiccant unit without incurring damage to either equipment. One of the potential barriers in installing CHP is the electrical interconnection with the utility grid and this experiment is an attempt to address these issues and the various steps needed in actually connecting a generator parallel to the grid have been enumerated in this research project.

It was also found from recorded results that the liquid desiccant system operation is below design performance owing to insufficient waste heat obtained from the two EDAC units. However in the second generation of CHP system 1, with the new engine generator, the liquid desiccant has the capability to perform at its designed level.

REFERENCES

1. Cowie, M., Marantan, A., Garland, P., Radermacher, R., 2002. “CHP for Buildings – The Challenge of Delivering Value to the Commercial Sector.” Proceedings of the International Mechanical Engineering Congress and Exposition Emerging and New Technologies for Heat Pump and Refrigeration Cycles and CHP (Combined Cooling, Heating and Power), pp. 1 – 9.
2. Cowie, M., Liao, X., Radermacher, R., 2003. “Performance Comparison of Waste-Heat Driven Desiccant Systems.” ASHRAE Annual Meeting, pp. 1 – 13.
3. Kathabar Systems Inc. “Application Manual for Kathapac Dehumidification.”
4. Nayak, S., Radermacher, R., 2004. “CHP for Buildings: Integration of 75 kW Engine Generator with Liquid Desiccant System.” Improving Energy Efficiency in Commercial Buildings Conference pp. 1 – 12.
5. DTE Energy Technologies. “ENI 75 Installation and Operation Manual.”
6. Marantan, A., Popovic, P. and Radermacher, R., 2002. “The Potential of BCHP Technology in Commercial Buildings – Characterizing the BCHP Demonstration Building.” ASHRAE symposium on CHP Technologies for the New Century, ASHRAE Transactions, **108**, pp. 1 – 13.

Copyright © 2004 by ASME