Proceedings of IMECE04
2004 ASME International Mechanical Engineering Congress and Exposition
November 13-20, 2004, Anaheim, California USA

IMECE2004-61598

PERFORMANCE CHARACTERISTICS OF A MICROTURBINE-DOUBLE EFFECT ABSORPTION CHILLER CHP SYSTEM

Timothy C. Wagner
United Technologies
Research Center

Mark E. Marler
United Technologies
Research Center

Sunghan Jung
United Technologies
Research Center

ABSTRACT

A combined heat and power (CHP) system consisting of four natural gas-fired microturbines and a double effect absorption chiller/heater has been developed and tested. The system is designed to operate in one of three modes: Power Only, Power and Cooling, and Power and Heating. Depending on the operating mode, the system is capable of generating 240 kW of electrical power, 387 kW of cooling capacity, and 264 kW of heating capacity. This paper will present test results of the system performance, including power output, cooling and heating capacity, system fuel utilization, and sound levels for conditions representative of commercial buildings located in the United States.

INTRODUCTION

The on-site generation of electrical power, termed distributed generation or DG, has received much attention in recent years. This attention is the result of several factors, including reliability issues with grid-supplied electricity, power outages caused by severe weather, and the economic impact of rising energy costs. One area of particular interest has been on-site generation for commercial buildings. Several prime movers have been considered for these applications, including fuel cells, reciprocating engines, and microturbines. Of these options, microturbines have several advantages, including low emissions, low noise, and low vibration. In addition, microturbines have relatively few moving parts, leading to high reliability and low maintenance.

No matter which prime mover is selected, the key to efficient and economic application of distributed generation is the effective utilization of the thermal energy created by the prime mover. Systems that incorporate prime movers and Thermally Activated Technologies (TAT) such as absorption chillers, desiccant dehumidifiers, and organic rankine cycles have the potential to create highly efficient systems. The market potential for such Integrated Energy Systems (IES) has been estimated to be almost 17 GW in 2010 and over 35 GW by 2020 (Ref. 1). IES have the potential to achieve higher fuel utilization than central power plants, thereby reducing fossil fuel use and air pollution. Microturbine-based IES have an advantage over reciprocating engines in that all of the waste heat is contained in the exhaust gas, simplifying the integration of the prime mover and TAT.

The purpose of this paper is to describe a microturbine-based IES and present system performance characteristics based on extensive tests conducted over a broad range of operating conditions. The key advancement of the system studied in the current investigation is the successful implementation of a double effect lithium bromide-water absorption cycle powered by the low-temperature exhaust from microturbines. The double effect chiller provides efficient use of the waste heat and therefore higher system fuel utilization than CHP systems utilizing single effect absorption chillers (Ref. 2).

NOMENCLATURE

Q_{evap}	= cooling capacity of the system at full output
$ElectPower$	= net electrical power generated by the system
$\dot{V}_{ng}$	= volumetric flow rate of natural gas
LHV	= lower heating value of the natural gas supply
ϕ	= fuel utilization

Copyright © 2004 by ASME

SYSTEM DESIGN

The current system of interest, shown schematically in Figure 1, is an integrated CHP system consisting of four natural gas-fired microturbines, two fuel gas boosters, a double effect absorption chiller/heater, and a diverter valve.

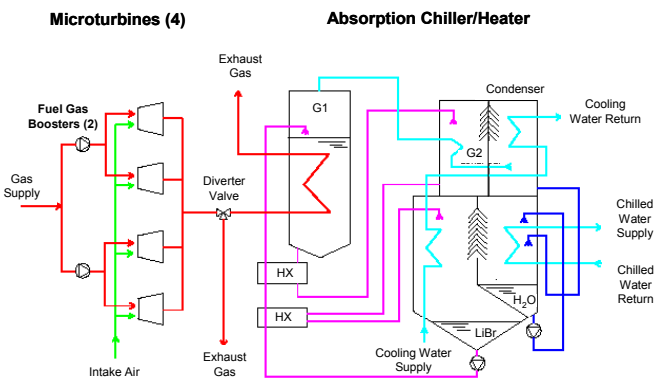

Figure 1. CHP System Schematic (Ref. 3)

A picture of the microturbines is shown in Figure 2. While the photograph shows six microturbines, only four were used for the current investigation. The microturbines, which were located outside, included an inlet silencer that can be seen on the front of the three microturbines in the foreground.

Figure 2. Microturbines and exhaust manifold (Ref. 3)

The exhaust of the microturbines was collected in a manifold, which directed the hot gas to the chiller. The chiller, shown in Figure 3, was installed indoors.

Figure 3. Double effect absorption chiller/heater (Ref.3)

Each turbine engine includes a compressor, a combustor, a turbine, and a recuperator. The engine drives a permanent magnet generator. The high-frequency alternating current output is converted to three-phase alternating current by a solid-state power electronics module located inside the microturbine enclosure. The four engines are powered by high-pressure natural gas that is supplied by two fuel gas boosters.

The chiller/heater was derived from a direct fired, double effect lithium bromide-water absorption machine. The chiller/heater includes an evaporator, absorber, condenser, high-temperature and low-temperature generators, solution heat exchangers, refrigerant and solution pumps, purge system, controls and auxiliaries. A diverter valve in the ducting connecting the microturbine exhaust to the chiller is used to regulate the flow of exhaust through the chiller. The position of the control valve is set by the chiller controller to maintain the desired leaving chilled water temperature. An air seal blower is located in the diverter valve to provide a pressurized air seal to prevent hot exhaust gas from entering the high stage generator when the chiller is not operating.

The chiller uses water at low absolute pressure (vacuum) as the refrigerant. The chilling effect is created by boiling the water at approximately 5.7^{o}C. To make the process continuous, the refrigerant (water) must be removed as it vaporizes in the evaporator. This is accomplished by using a lithium bromide solution (which has a high affinity for water) to absorb the water vapor. As this process continues, the lithium bromide becomes diluted, reducing its absorption capability. A solution pump then transfers the weak (diluted) solution to the generators where it is re-concentrated in two stages (double effect) to boil off the previously absorbed water. A variable frequency drive on the solution pump automatically maintains optimum solution flow to the generators at all operating

Copyright © 2004 by ASME

conditions for maximum efficiency. The diluted solution is pumped to the high-temperature generators where it is heated and re-concentrated to a medium concentration solution by the heat from the microturbine exhaust.

The chiller/heater can also be used to provide hot water for space heating or other applications to reduce or eliminate dependency on existing or supplemental boilers. When operated as a heater, hot water temperatures of 60°C are standard. In this mode the cycle follows a different vapor flow path than that undertaken for cooling and does not use the absorption process. In addition, the absorber-condenser cooling water circuit is drained; all heat rejection from the machine is designed to take place through the evaporator (now the heating bundle) in a classic two-pipe system that utilizes only the evaporator nozzles.

When operated as a heater, the high temperature water vapor produced in the high-temperature generator section is passed directly to the evaporator via the absorber where it condenses and transfers its heat to the water circulating through the evaporator tubes. This condensed water then flows to the absorber section where it mixes with the concentrated solutions returning from the high temperature generator. The diluted solution is then pumped back to the high temperature generator to repeat the vapor generation phase for the heating function. Changeover from cooling to heating requires switching the positions of two hand valves, draining the absorber-condenser water circuit and selecting the heating mode at the control panel.

The CHP system in this investigation is designed to operate in three modes: Power Only mode, Power/Cooling mode and Power/Heating mode. In Power Only mode the microturbines generate electricity, the exhaust is vented to atmosphere, and the chiller / heater is not used. In the Power/Cooling mode, the microturbines produce electricity and the exhaust is used to power the chiller, which provides chilled water that can be used for air conditioning. In Power/Heating mode the microturbines generate electricity and the waste heat driven chiller provides hot water for space heating.

SYSTEM TESTING

The system was tested over a wide range of operating conditions in all three modes. All tests were conducted using grid parallel electrical connections for the microturbines. The electricity generated was utilized in the facility. The chiller/heater was connected to a test stand to enable variations in cooling and heating load.

The method for qualifying the performance of the system was based on the three operation modes. A rating condition was selected for each mode that is consistent with standard industry practice. For the Power Only mode:

- ISO standard (Ref. 4) was used for rating the electrical power generation. This rating is based on an ambient temperature of 15°C with 60% relative humidity and sea level atmospheric pressure.
- Net power output includes parasitic power for the fuel gas boosters and the air seal blower used in the diverter valve.
- Overall gross and net electrical efficiency was based on natural gas Lower Heating Value, consistent with the rating approach used for prime movers.

The Power/Cooling mode of operation was qualified using the following approach:

- A nominal hot day with an ambient temperature of 35°C was used as the rating condition with an outside relative humidity of 75% RH and sea level atmospheric pressure.
- Net power output includes parasitic power for the fuel gas boosters and the chiller/heater
- Cooling capacity rating was based on ARI 560 Standard (Ref. 5) for quoting cooling capacity: 6.67 °C chilled water out (0.043 mL/J), 29.4°C (0.072 mL/J) cooling water return to the chiller/heater, and fouling factors of 0.000044 m^2 °C/W for the absorber and condenser and 0.000018 m^2 °C/W for the evaporator.
- Overall gross and net electrical efficiency was based on natural gas Lower Heating Value to be consistent with the rating approach used for the Power Only mode.

The Power/Heating mode of operation was qualified using the following approach.

- A nominal cold day with an ambient temperature of 0°C was used for the rating condition with a relative humidity of 35% and sea level atmospheric pressure
- Net power output includes parasitic power for the fuel gas boosters and the chiller/heater
- Heating capacity rating was based on ARI 560 with 60°C out hot water and a fouling factor of 0.000018 m^2 °C/W for the evaporator
- Overall gross and net electrical efficiency was based on natural gas Lower Heating Value to be consistent with the rating approach used for the Power Only mode.

The method for calculating the fuel utilization of the CHP system is shown in Equation 1.

$$\phi_{SYS} = \frac{Q_{evap} + ElectPower}{\dot{V}_{ng} * LHV} \quad (1)$$

Copyright © 2004 by ASME

RESULTS AND DISCUSSION

Both the steady state and transient power generation capabilities of the four microturbines were measured over a wide range of operating conditions in the Power Only mode. The gross and net power generated by the system are plotted in Figure 4 for a range of ambient temperatures. The parasitic losses of the key components included the power to operate the fuel gas boosters and the air seal blower. The power output is essentially constant for low to moderate ambient temperatures. At higher temperatures the power output decreases as the turbines enter a de-rate condition.

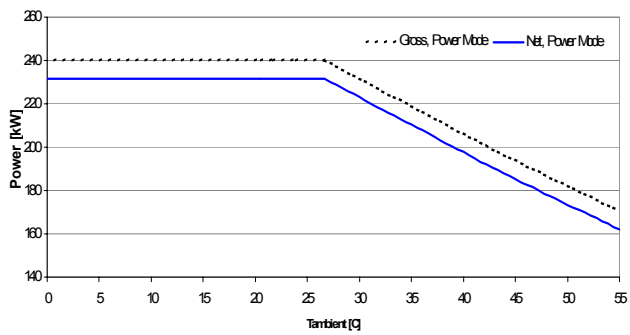

Figure 4. Maximum electrical power - Power Only mode (Ref. 3)

The maximum electrical power output of the CHP system, operated in either Power / Cooling or Power / Heating mode, is shown in Figure 5. In both of these operating modes, the microturbine exhaust is directed into the chiller / heater, resulting in an additional 1.5 kPa of backpressure on the microturbines. This additional pressure results in a slight decrease in the power generated for ambient temperatures above 21.7°C. In addition, the power required to run the chiller / heater slightly decreases the net power output. The power required to operate the chilled water and cooling water pumps and the cooling tower fans is not included.

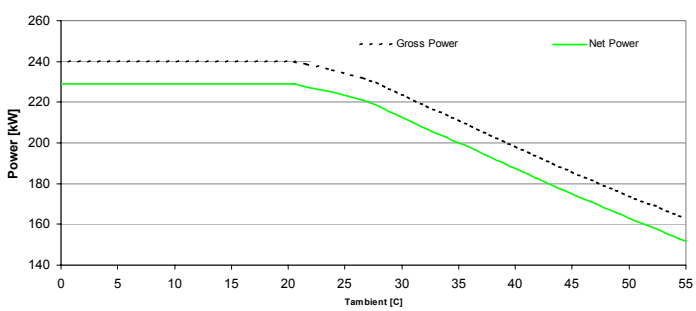

Figure 5. Maximum electrical power - Power / Cooling or Power Heating mode (Ref. 3)

For an ambient temperature of 35°C and a rating condition as previously defined, the full load capacity of the absorber was 387 kW. Based on this value and the performance of the microturbines, the fuel utilization of this system in cooling mode is 70%, more than double that of the grid (Ref. 6). The cooling capacity of the system was measured for a range of cooling water inlet temperatures. The cooling capacity increases significantly as the cooling water inlet temperature is reduced; this trend is indicated by the dashed line in Figure 6. The chilled water leaving temperature was maintained at 6.67°C during the tests. The heating capacity was also measured and found to be 264 kW for the rating condition defined previously.

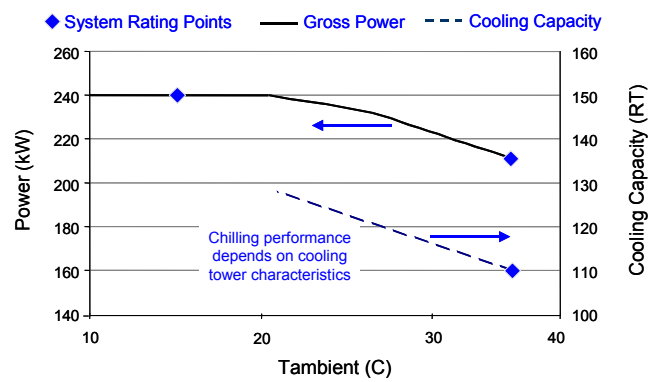

Figure 6. Generated power and chiller capacity vs. ambient temperature (Ref. 3)

In addition to steady-state performance, tests were conducted to simulate step changes in microturbine power demand. The power demand to the microturbine was changed in 60 kW steps from 120 kW to 240 kW. The power was held at 240 kW and was then quickly reduced back to 120 kW. During the testing the microturbines demonstrated stable control of output power. The chiller also demonstrated the ability to control the cooling water fluctuations to within ± 1°C of the set point, which is well within typical chiller requirements. The results of a transient test are shown in Figure 7. The cooling water inlet temperature was maintained at 23.3°C and the chilled water outlet temperature (set point) was set at 6.67°C.

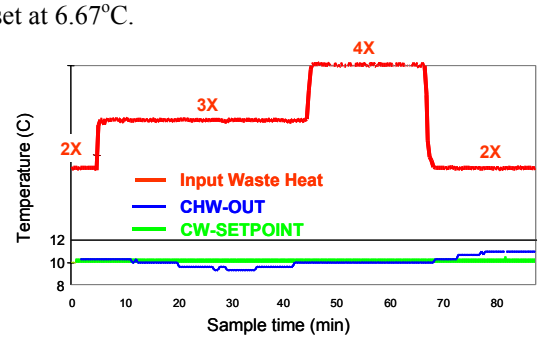

Figure 7. Chiller response to step changes in microturbine power (Ref. 3)

Copyright © 2004 by ASME

A complete noise survey was conducted on the system while operating at full power. The overall sound pressure level of the four microturbines was 65 dBA at 10 meters with the inlet silencer installed. Without the silencers the overall sound pressure level at 10 meters was 70 dBA.

The sound generated from the chiller was measured indoors, where it was located in the facility. The overall sound pressure of the chiller/heater was measured to be 69 dBA at 1 meter. In addition, no significant acoustic responses (resonances) were observed in the ductwork connecting the microturbines and the chiller/heater. The sound level of the air seal blower, which operates when the chiller is off, was 65 dBA at 1 meter.

CONCLUSIONS

A combined heat and power system consisting of four microturbines and a double effect absorption chiller has been developed and characterized. System performance was demonstrated in three modes of operation: Power Only, Power/Cooling, and Power/Heating. The system was shown to generate 240 kW at an ISO rating condition, to have a cooling capacity of 387 kW at full load conditions, and to provide a heating capacity of 264 kW on a day when the ambient temperature is 0 ^{o}C. The system was shown to achieve an overall fuel utilization that is double what is achieved by the "grid." Stable operation of the chiller was demonstrated for significant fluctuations in microturbine output This system has the potential to make a major contribution toward meeting the U.S. Department of Energy's national production goals of 17 GW using affordable, efficient energy conversion methods.

ACKNOWLEDGMENTS

This research was partially sponsored by the U.S. Department of Energy/Oak Ridge National Laboratory under the Building Combined Heating and Power Systems Technology contract (4000009518).

REFERENCES

1. Integrated Energy Systems (IES) for Buildings: A Market Assessment; Final Report; Resource Dynamics Corporation for Oak Ridge National Laboratory, Contract No. DE-AC05-00OR22725, August 2002.

2. Mull, T.E.: Practical Guide to Energy Management for Facilities Engineers and Plant Managers; ASME Press, New York, 2001.

3. UTC Power PureComfort^{TM} Product Literature, 2003-2004.

4. ISO 2314:1989, Gas Turbine Acceptance Tests, International Organization for Standardization, 1989.

5. Standard 560, 2000 Standard for Absorption Water Chilling and Water Heating Packages, Air-Conditioning and Refrigeration Institute, Arlington Virginia.

6. Kaiper, Gina V.: U.S. Energy Flow Trends – 2001; Lawrence Livermore National Laboratory; UCRL-ID-129990-01; September 2003

Copyright © 2004 by ASME