ENERGY CONSERVATION

ORNL/Sub/80-61601/2

# Research and Development of Highly Energy-Efficient Supermarket Refrigeration Systems

## Volume 2

## Supplementary Laboratory Testing

William M. Toscano
David H. Walker
Russell D. Tetreault

FOSTER-MILLER ASSOCIATES, INC.
350 Second Avenue
Waltham, Massachusetts 02154

Work performed for

OAK RIDGE NATIONAL LABORATORY
operated by
UNION CARBIDE CORPORATION
for the

U. S. DEPARTMENT OF ENERGY

OFFICE OF BUILDINGS ENERGY
RESEARCH AND DEVELOPMENT

Printed in the United States of America. Available from
National Technical Information Service
U.S. Department of Commerce
5285 Port Royal Road, Springfield, Virginia 22161
NTIS price codes—Printed Copy: A03 Microfiche A01

This report was prepared as an account of work sponsored by an agency of the United States Government. Neither the United States Government nor any agency thereof, nor any of their employees, makes any warranty, express or implied, or assumes any legal liability or responsibility for the accuracy, completeness, or usefulness of any information, apparatus, product, or process disclosed, or represents that its use would not infringe privately owned rights. Reference herein to any specific commercial product, process, or service by trade name, trademark, manufacturer, or otherwise, does not necessarily constitute or imply its endorsement, recommendation, or favoring by the United States Government or any agency thereof. The views and opinions of authors expressed herein do not necessarily state or reflect those of the United States Government or any agency thereof.

ORNL/Sub/80-61601/2
Dist. Category UC-95d

# RESEARCH AND DEVELOPMENT OF HIGHLY ENERGY-EFFICIENT SUPERMARKET REFRIGERATION SYSTEMS

## VOLUME 2
## SUPPLEMENTAL LABORATORY TESTING

JUNE, 1983

WILLIAM M. TOSCANO
DAVID H. WALKER
RUSSELL D. TETREAULT

Report prepared by

FOSTER-MILLER ASSOCIATES, INC.
350 Second Avenue
Waltham, MA 02154

under
Subcontract 86X-61601C
for
OAK RIDGE NATIONAL LABORATORY
Oak Ridge, TN 37830

operated by
UNION CARBIDE CORPORATION
for the
U.S. DEPARTMENT OF ENERGY
under Contract No. W-7405-eng-26

# FOREWORD

Foster-Miller Associates, Inc. has contracted with Union Carbide Corporation (UCC), Nuclear Division to perform the following additional work for Task 2 in the research and development of a new, highly energy-efficient, supermarket refrigeration system:

a. Investigate the refrigeration system's operating characteristics during low ambient temperature conditions

b. Evaluate the performance of the system using floating head or ambient subcooling for condenser pressure control

c. Compare the performance of the system using either microprocessor control or mechanical control to govern compressor cycling

d. Examine the effects of heat reclaim on refrigeration system performance

e. Test the system with:

   1. R-12 as the refrigerant employing a 20$^{\circ}$F evaporator temperature

   2. R-502 as the refrigerant at an evaporator temperature of -20$^{\circ}$F.

The Volume 2 report consists of a:

a. Summary description of the supermarket refrigeration system

b. Test plan and procedure

c. Refrigerants R-12 and R-502 test results

d. Conclusions and recommendations.

## ABSTRACT

The Supermarket Refrigeration System project was structured to investigate and develop a new, highly energy-efficient supermarket refrigeration system which features unequal, parallel compressors, microprocessor suction pressure control, and floating head pressure control. Energy savings are achieved because such a system is better able to match compressor capacity with the required refrigeration load. For this same reason, the unequal, parallel compressor system can operate at the lowest possible condenser pressure. The combined effect of highest possible suction pressure and lowest possible condensing pressure substantially increases the energy efficiency ratio (EER) of the refrigeration system.

A report documenting the market assessment, thermodynamic analysis, technical development, and engineering evaluation test plan has been prepared and distributed to the supermarket industry. Because laboratory testing of the system was only performed for R-12 under summer ambient conditions, it was decided to extend the testing under other conditions, such as winter and spring ambients, operation with another refrigerant (R-502), and with heat reclaim.

The test program included the laboratory testing of the supermarket refrigeration system with the following capabilities:

a. Floating head pressure control, that is, floating head control

b. Fixed head pressure control, that is, ambient subcooling control

c. Microprocessor suction pressure control, that is, microprocessor control

d. Mechanical suction pressure control, that is, mechanical control

e. Heat reclaim.

The test conditions included winter and spring ambient temperatures ranging from $8^{\circ}$ to $70^{\circ}$F, refrigerants R-12 and R-502 with corresponding evaporator temperatures of $20^{\circ}$ and $-20^{\circ}$F, respectively, and variable refrigeration loads between 100,000 and 170,000 Btu/hr. Heat reclaim tests were performed with R-12 only.

For the R-12 tests, the unequal, parallel compressor system, when operated with microprocessor control and floating head control, consumed 16.6 percent less energy than the same system operating with mechanical control and ambient subcooling. Most of this saving can be attributed to the use of floating head control.

For the heat reclaim tests, the energy savings measured through the use of microprocessor control and floating head control were less than measured in the R-12 tests. This can be attributed to the increased condenser pressure experienced in second stage heat reclaim.

For the R-502 tests, the energy savings in using microprocessor control and floating head control amounted to 4.3 percent when compared to operation with mechanical control and ambient subcooling. Most of these savings can be attributed to the use of microprocessor control.

For the three sets of tests performed, R-12, R-12 with heat reclaim, and R-502, the highest system EER was achieved when the unequal, parallel compressor system was operated with microprocessor control and floating head control.

ACKNOWLEDGEMENTS

The development team consisted of personnel from Foster-Miller Associates, Inc. The Supermarket Advisory Committee, comprised of supermarket industry representatives, provided advisory consulting and program guidance. Program participants included:

a. Foster-Miller:

William Toscano - Program Manager
David Walker
Russell Tetreault

b. Supermarket Advisory Committee

Mel Anstine - H.E. Butt Grocery Co.

Harold Fine - The Stop and Shop Companies, Inc. (Food Marketing Institute Representative)

George Gamache - Star Market Co.

Henri Korb - Safeway Stores, Inc.

Considerable technical and management support was provided by Messrs. Raymond Ellison and Virgil Haynes of Oak Ridge National Laboratory (ORNL) and Ronald Fiskum of the Department of Energy (DOE). Mr. Edward Vineyard, the ORNL technical monitor for the program, contributed significantly to the technical direction of the total program. Special thanks to Mr. Vineyard for his help in analyzing the data collected.

Mr. Todd Mann of the Food Marketing Insitute provided considerable marketing and technical information and participated in many of the program review meetings. His participation is very much appreciated.

TABLE OF CONTENTS


| Section | | Page |
|---|---|---|
| | FOREWORD | iii |
| | ABSTRACT | v |
| | ACKNOWLEDGEMENTS | vii |
| 1. | INTRODUCTION AND SUMMARY | 1 |
| 2. | REFRIGERATION SYSTEM DESCRIPTION | 3 |
| 2.1 | Refrigeration System | 3 |
| 2.2 | Refrigeration Load Simulator | 7 |
| 2.3 | System Instrumentation | 9 |
| 3. | TEST PLAN AND PROCEDURE | 13 |
| 3.1 | Test Plan | 13 |
| 3.2 | Heat Reclaim Modeling | 17 |
| 4. | R-12 TEST RESULTS | 18 |
| 4.1 | Results of the R-12 Tests without Heat Reclaim | 18 |
| 4.2 | Results of the R-12 Tests with Heat Reclaim | 22 |
| 5. | R-502 TEST RESULTS WITHOUT HEAT RECLAIM | 33 |
| 6. | CONCLUSIONS AND RECOMMENDATIONS | 38 |
| 7. | REFERENCES | 40 |

# 1. INTRODUCTION AND SUMMARY

Foster-Miller Associates, Inc., recently completed Phases I and II of the Supermarket Refrigeration System project. A report documenting the work performed for these two phases has been prepared and distributed (1). Phase I and II resulted in the development of a supermarket refrigeration system. Because laboratory testing of the system was only performed for R-12 during summer ambient conditions, it was decided to continue the laboratory testing (2). This report describes the testing with both R-12 and R-502 for winter and spring ambient conditions.

The test system employs three compressors of 5, 10, and 20 hp capacity for a total capacity of 35 hp. The compessors are joined by a common suction manifold. By changing the combination of compressors, the refrigeration supplied can be varied over seven possible capacity steps. Capacity control, an important aspect of refrigeration system operation, can be accomplished while the system operating conditions are maintained at a state providing greatest system efficiency.

The purpose of the test program is to evaluate certain key components of this system. These include:

a. Microprocessor control - This control type is responsible for the selection of the compressor combination to be employed at any given time. Suction pressure is the primary measurement used for this selection. A microprocessor is used to provide logic to the selection process.

b. Floating head control - The condenser pressure is allowed to rise and fall with ambient temperature. The condensing pressure is minimized whenever possible. Operation at low condenser pressure greatly reduces the power required for compressor operation.

During the tests, these components were compared to conventional refrigeration control schemes employed on most supermarket refrigeration systems.

A test plan was developed that would allow all the component evaluation to take place. Heat reclaim testing was also undertaken.

Tests were performed employing both R-12 and R-502 refrigerants. For the R-12 tests, the system evaporators were maintained at a temperature of 20°F. For the R-502 tests, the evaporator temperatures were kept at -20°F. Various part load conditions were used for the tests. The refrigeration loads were varied from 50 to 80 percent of the design load.

Major results of the test program were the following:

a For the R-12 tests without heat reclaim, the largest energy reduction was recorded by the use of microprocessor control and floating head control with the unequal, parallel compressor system. Energy consumption is reduced by 16.6 percent when this system is compared to one employing mechanical control and ambient subcooling.

b. For the R-12 tests without heat reclaim, the largest portion of these savings is attributable to the use of the floating head control.

c. For the R-12 tests with heat reclaim, the EERs were in general lower than those measured in the R-12 tests without heat reclaim. This was attributed to the use of second stage heat reclaim. The performance of the refrigeration system deteriorates due to the increased condenser pressure incurred in second stage heat reclaim.

d. The reduction in EER is more noticeable in the operation with floating head control rather than ambient subcooling control when heat reclaim is employed.

e. The highest EER was achieved by the employment of microprocessor control and floating head control for the heat reclaim tests.

f. For the R-502 tests, the highest EER was achieved by the employment of microprocessor control and floating head control.

g. The largest portion of the increase in EER for the R-502 tests was due to the use of the microprocessor control.

The primary conclusion that can be drawn from these results is that the total refrigeration system, consisting of unequal, parallel compressors, microprocessor control, and floating head control is a superior refrigeration system alternate for the supermarket industry.

It is recommended that anlaysis of the interaction between the refrigeration system and the store HVAC system be undertaken.

# 2. REFRIGERATION SYSTEM DESCRIPTION

## 2.1 Refrigeration System

The refrigeration system is shown schematically in Figure 1. The refrigeration process may be described as follows. After leaving the components of the refrigeration load simulator, described in subsection 2.2, the refrigerant gas is at low temperature and pressure due to the suction action of the compressors. The gas is collected in the suction manifold, located on the compressor rack, and distributed to the compressors where the temperature and pressure of the refrigerant are increased. The gas is then routed either to the condenser, or to the heat reclaim coil and then to the condenser, depending upon the position of the heat reclaim valve. At the condenser, the refrigerant is condensed to a liquid. The liquid then returns to the rack by one of two paths, depending upon the mode of head pressure operation in use. The experimental system is capable of operating in either a fixed or floating head pressure mode. In the fixed head pressure mode, the liquid refrigerant is piped directly to the compressor rack, passing through the head pressure regulator which is a valve that sets the minimum condensing pressure. At the rack, the liquid is distributed to the elements of the refrigeration load simulator through the liquid header. Excess liquid refrigerant is stored in the vertical receiver mounted on the rack. In the floating head pressure mode, the liquid refrigerant leaving the condenser passes through the Seasonmiser® control valve, and then to the receiver located on the roof next to the condenser. From the receiver, the liquid passes through an air-cooled subcooler coil mounted beneath the condenser coil. From the roof, the liquid is piped to the liquid header, bypassing the head pressure regulator. From the liquid header, the refrigerant is distributed to the components of the refrigeration load simulator. Near each of these components is located a thermal expansion valve that serves to expand the refrigerant and initiate the refrigeration process.

The compressors are mounted on a rack, shown in Figure 2, where most of the associated system equipment is also located. Included with this equipment are the liquid and suction manifolds, the hot gas defrost components, the heat reclaim control valves, the compressor lubrication system, and all the electrical components associated with the operation of the system. Most of the components on this rack are standard components employed on all multiple compressor systems manufactured by Friedrich. Modifications to this rack for the test system consisted of equipping the rack with 5, 10, and 20 hp compressors, providing extra valving so that both floating and fixed head

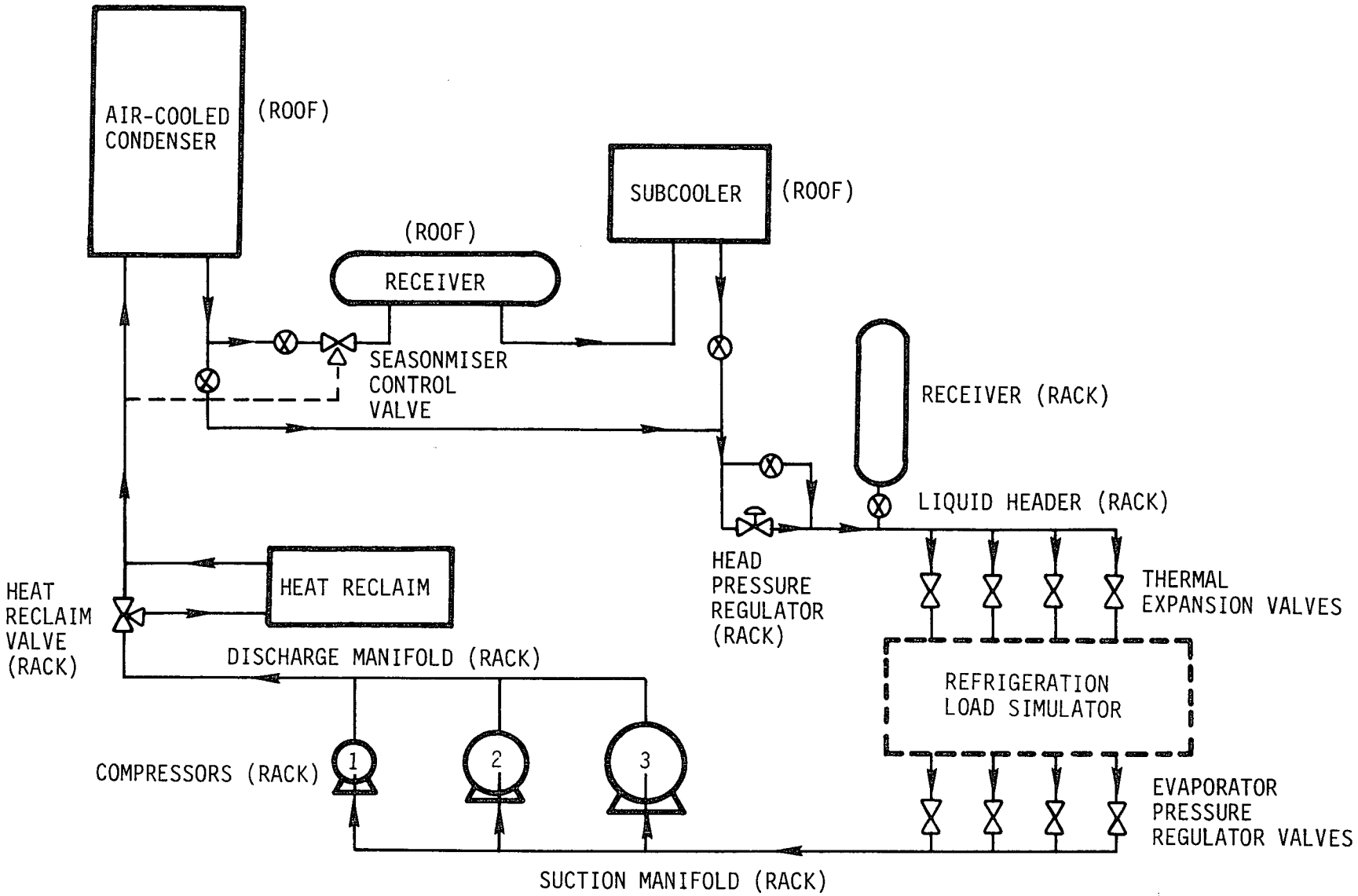


FIGURE 1. - Elements of the refrigeration system.

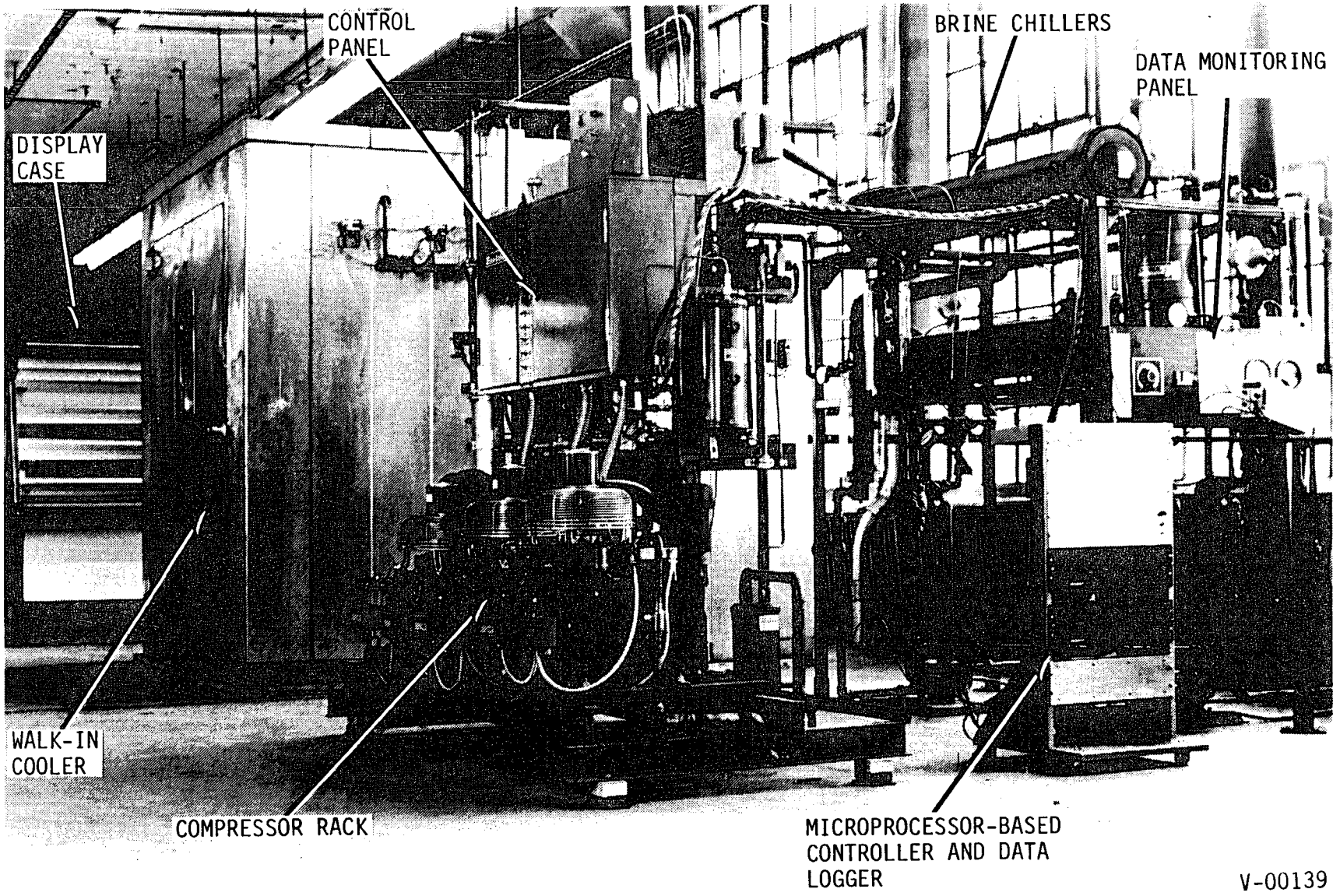


FIGURE 2. - Refrigeration system.

pressure could be examined, adding the Seasonmiser control components and providing electrical wiring components for the integration of the microprocessor control.

The heat reclaim coil in a supermarket refrigeration system utilizes the heat rejected for refrigeration to supply space heating to the store. Upon demand for space heating, usually through a thermostat control, the flow of the discharge gas is directed through the heat reclaim coil where the refrigerant is cooled, sometimes to condensing temperatures. Heat is rejected from this coil into air which passes over the coil. The air is then introduced into the conditioned space to provide space heating. To heat the air to a reasonably high temperature, it is necessary to maintain the refrigerant at high pressure. In winter, the pressure of the refrigerant must be increased artificially for proper heat reclaim operation. This has a significant effect on the performance of the refrigeration system. For this reason, a heat reclaim unit was included in the refrigeration system.

A standard air-cooled condenser is used in the test system. The refrigerant gas is piped into the condenser where it is condensed, and in many cases, subcooled by the air passed over the condenser coils by three fans. The temperature and pressure at which condensing occurs are determined by the ambient temperature, the amount of coil surface and the condenser controls employed. Since the condensing temperature and pressure greatly influence the operation of the refrigeration system, they were carefully examined in the testing.

Piping was arranged so the system could operate in either a fixed or floating head pressure mode. The major elements of the floating head control system consist of the condenser, Seasonmiser control valve, the receiver, and the subcooler (Figure 1). When this control type is in operation, no head pressure regulator is required. A bypass is provided on the compressor rack so that the flow of refrigerant is directed around the head pressure regulator. The receiver, located on the rack, is isolated from the piping system when floating head pressure is used. This receiver is an integral part of the fixed head pressure control system but is not required for floating head pressure operation. When fixed head pressure operation is desired, the Seasonmiser valve, the roof-mounted receiver and the subcooler must be isolated from the system. This is accomplished by providing isolation valves on these components and bypass piping as shown in Figure 1. The head pressure regulator is used for fixed head pressure operation. Therefore, the bypass located on the skid is shut off and the rack-mounted receiver is utilized.

## 2.2 Refrigeration Load Simulator

The refrigeration load on a supermarket refrigeration system fluctuates due to the following conditions:

a. Changes in ambient temperature and humidity

b. Frequent loading and unloading of the display case

c. Hot gas defrost of the display cases.

Each of these load characteristics will greatly influence the required compressor capacity and must be considered when developing control techniques for the unequal, parallel compressors.

The refrigeration load simulator, depicted in Figure 3, was employed to test the unequal, parallel compressor refrigeration system. It is divided into four loops, consisting of:

a. One walk-in chest

b. One display case

c. Two brine chiller loops.

The walk-in chest is intended to represent approximately 25 percent of the refrigeration load. The chest is equipped with two unit coolers which can be defrosted with hot gas. The size of this load represents the maximum fraction of the refrigeration load that can be defrosted with hot gas. The temperature within the walk-in chest can be maintained at a constant value by a thermostatically-controlled steam heater. The chest is also equipped with a humidifier which is supplied by a steam line that is controlled by a solenoid valve. The valve is opened when a humidistat within the chest indicates that the humidity has dropped below the level desired.

The display case is a standard Friedrich, multideck freezer case that has a refrigeration load of 20,000 Btu/hr. The display case temperature is kept constant by the use of a thermostatic expansion valve and an evaporator pressure regulator (EPR) valve. The result of using these control valves is a fluctuating refrigerant flow that simulates display case cycling.

The seasonal load variation is simulated using a brine chiller loop. A standard brine chiller evaporator is employed which has a mixture of ethylene-glycol and water circulating through it. Heat is added to the loop by the use of a steam heated heat exchanger. The refrigeration load incurred by this loop will depend upon the flow rate of the brine. By adjusting this flow rate on a daily or weekly basis throughout the course of the test program, a long-term variation in the refrigeration load can be simulated.

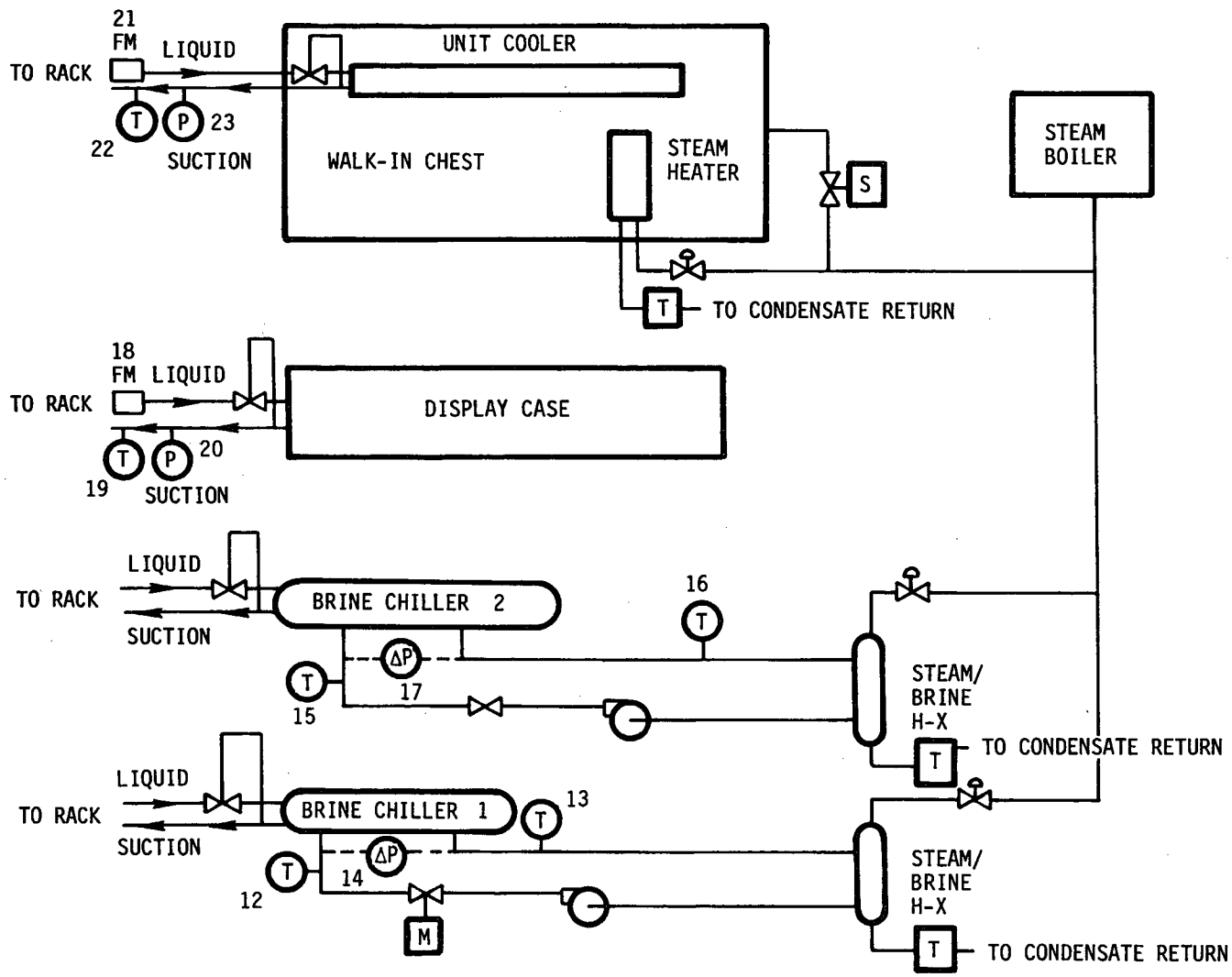


Figure 3. - Refrigeration load simulator and instrumentation.

A second brine loop is employed in the refrigeration load simulator and is also controlled in the manner previously described.

## 2.3 System Instrumentation

The performance of a refrigeration system is calculated by the value of the EER achieved by the system. The EER is defined as:

$$\text{EER} = \frac{\text{Refrigeration supplied}}{\text{Energy input}} \quad \frac{\text{Btu/hr}}{\text{W}} \tag{1}$$

The EER can be considered as either an instantaneous or long-term quantity. In the instantaneous case, the refrigeration supplied is the rate at which refrigeration occurs and the energy consumption is the power consumed by the system at the instant of measurement. The long-term EER is found by first summing the instantaneous refrigeration loads and power consumptions, measured at discrete time intervals, and then by dividing the total refrigeration supplied by the total energy consumed. The total refrigeration supplied can be expressed as:

$$\text{Refrigeration supplied} = \sum_{i=1}^{N} \dot{Q}_i \Delta\tau_i \tag{2}$$

where

$\dot{Q}_i$ = the instantaneous refrigeration load of the system

$\Delta\tau_i$ = the time interval between measurements

$N$ = number of time intervals

The total energy consumed is determined from:

$$\text{Energy consumed} = \sum_{i=1}^{N} \dot{W}_i \Delta\tau_i \tag{3}$$

where

$\dot{W}_i$ = the instantaneous power consumption of the system

For this system it is necessary to correlate the performance of the system as measured by the EER, with the control of the unequal, parallel compressors and the other operating conditions of the refrigeration system. Of particular concern are:

a. The condenser temperature and pressure

b. The ambient temperature

c. Refrigerant subcooling

d. Suction pressure and temperature

e. Compressor sequencing and operation.

All of these quantities can be measured simultaneously and in conjunction with the EER measurements.

The necessary measurements in the refrigeration system are shown in Figure 4. The pressure measurements, made by the use of pressure transducers, are indicated by the letter P. Temperature measurements, indicated by the letter T, are made by thermocouples. The power consumption of the compressors is measured by wattmeters attached to each compressor and is shown by W .

Measurements taken to determine the refrigeration load of the walk-in chests, display case and each of the brine loops were shown in Figure 3.

The refrigeration load of each of the brine loops can be determined from:

$$\dot{Q}_{Bi} = \dot{m}_B C (T_{in} - T_{out})_B \tag{4}$$

where

$\dot{Q}_{Bi}$ = the refrigeration load (Btu/hr)

$\dot{m}_B$ = the mass flow rate of the brine (lb/hr)

$C$ = the specific heat of the brine (Btu/lb-$^{o}$F)

$T_{in}$ = the inlet temperature of the brine ($^{o}$F)

$T_{out}$ = the outlet temperature of the brine ($^{o}$F)

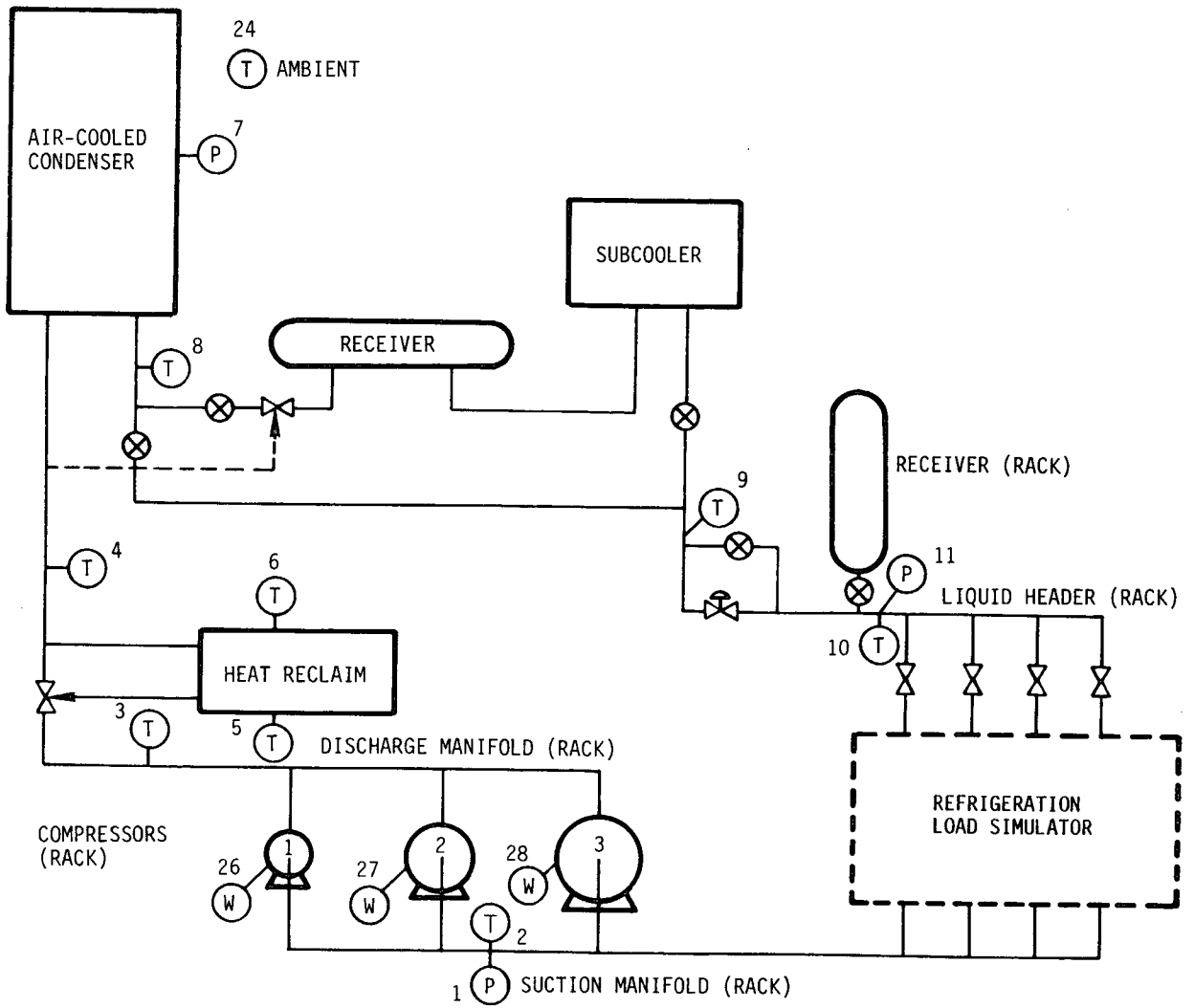


FIGURE 4. - Supermarket refrigeration test system instrumentation.

The inlet and outlet temperatures of the brine chiller are easily measured with thermocouples. The mass flow rate of the brine is determined by measuring the pressure drop across the chiller with a differential pressure transducer and then correlating the flow rate through the loop to this pressure difference.

The refrigeration loads of the walk-in chest and the display case are determined from:

$$\dot{Q}_{WCi} = \dot{m}_{WC}(h_{out} - h_{in})_{WC} \tag{5}$$

$$\dot{Q}_{DCi} = \dot{m}_{DC}(h_{out} - h_{in})_{DC} \tag{6}$$

where

$\dot{Q}_{WCi}$, $\dot{Q}_{DCi}$ = the refrigeration loads of the walk-in chest and display case, respectively (Btu/hr)

$\dot{m}_{WC}$, $\dot{m}_{DC}$ = the mass flow rates of the refrigerant through the walk-in chest and display case, respectively (lb/hr)

$h_{out}$ = the outlet specific enthalpy of the refrigerant (Btu/lb)

$h_{in}$ = the inlet specific enthalpy of the refrigerant (Btu/lb)

The mass flow rate of the refrigerant is measured by a flowmeter located in the liquid line. The inlet and outlet specific enthalpies are determined by measuring the temperature and pressure at each of these points. The specific enthalpy can then be found in thermodynamic property tables for the particular refrigerant.

# 3. TEST PLAN AND PROCEDURE

## 3.1 Test Plan

The purpose of the tests was to compare the performance of several system components for different refrigerants, ambient temperatures, and refrigeration loads. Of particular interest was the performance of the system with:

a. Microprocessor control

b. Mechanical control

c. Floating head control

d. Ambient subcooling control.

The various test comparisons are set up in a test matrix which is shown in Table 1. Comparisons were made between the two types of suction pressure control and head pressure control at various refrigeration loads. Testing with heat reclaim was performed for R-12, but not R-502. There are a total of eight possible system combinations for testing.

Testing was performed with different evaporator temperatures for the two refrigerants. For the medium temperature testing with R-12, an evaporator temperature of 20°F was maintained at all of the fixtures. For the low temperature testing with R-502, an evaporator temperature of -20°F was maintained.

TABLE 1. - Matrix of tests for the supermarket refrigeration system test project

| Suction pressure control type | Head pressure control type | | | |
|---|---|---|---|---|
| | Ambient subcooling | | Floating head | |
| | Without heat reclaim | With heat reclaim | Without heat reclaim | With heat reclaim |
| Microprocessor | 1 | 5 | 2 | 6 |
| Mechanical | 3 | 7 | 4 | 8 |

Eight possible test conditions.

Hot gas defrost schedule: R-12, once every 24 hr
R-502, once every 8 hr

Hot gas defrost was used for the walk-in cooler and the display case for all tests. For the medium temperature tests, each fixture was defrosted once every 24 hr. The duration of the defrost was 5 min. For the low temperature tests, each fixture was defrosted every 8 hr.

The desired refrigeration loads for the R-12 testing without heat reclaim are shown in Table 2. It was decided that the system should be tested at part load to test the compressor control systems and to simulate typical winter refrigeration load conditions. The part loads selected represent 80, 70, 60, and 50 percent of the design refrigeration load of the system which is estimated to be 200,000 Btu/hr for an evaporator temperature of 20°F and a condenser temperature of 120°F.

The refrigeration loads selected for the R-12 testing with heat reclaim are shown in Table 3. These loads represent 70 and 50 percent of the design load of the refrigeration system.

The refrigeration loads for the tests conducted with R-502 are shown in Table 4. The part loads chosen for testing was 90, 80, and 70 percent of the design refrigeration load, which was

TABLE 2. - Refrigeration loads for the R-12 tests without heat reclaim

| Test No. | Suction pressure control type | Head pressure control type | Refrigeration load (Btu/hr) |
|---|---|---|---|
| 101 | Mechanical | Ambient subcooling | 160,000 |
| 102 | Microprocessor | Ambient subcooling | 160,000 |
| 103 | Mechanical | Floating head | 160,000 |
| 104 | Microprocessor | Floating head | 160,000 |
| 105 | Mechanical | Ambient subcooling | 140,000 |
| 106 | Microprocessor | Ambient subcooling | 140,000 |
| 107 | Mechanical | Floating head | 140,000 |
| 108 | Microprocessor | Floating head | 140,000 |
| 109 | Mechanical | Ambient subcooling | 120,000 |
| 110 | Microprocessor | Ambient subcooling | 120,000 |
| 111 | Mechanical | Floating head | 120,000 |
| 112 | Microprocessor | Floating head | 120,000 |
| 113 | Mechanical | Ambient subcooling | 100,000 |
| 114 | Microprocessor | Ambient subcooling | 100,000 |
| 115 | Mechanical | Floating head | 100,000 |
| 116 | Microprocessor | Floating head | 100,000 |

TABLE 3. - Refrigeration loads for the R-12 tests with heat reclaim

| Test No. | Suction pressure control type | Head pressure control type | Refrigeration load (Btu/hr) |
|---|---|---|---|
| 117 | Mechanical | Ambient subcooling | 140,000 |
| 118 | Microprocessor | Ambient subcooling | 140,000 |
| 119 | Mechanical | Floating head | 140,000 |
| 120 | Microprocessor | Floating head | 140,000 |
| 121 | Mechanical | Ambient subcooling | 100,000 |
| 122 | Microprocessor | Ambient subcooling | 100,000 |
| 123 | Mechanical | Floating head | 100,000 |
| 124 | Microprocessor | Floating head | 100,000 |

TABLE 4. - Refrigeration loads for the R-502 tests without heat reclaim

| Test No. | Suction pressure control type | Head pressure control type | Refrigeration load (Btu/hr) |
|---|---|---|---|
| 201 | Mechanical | Ambient subcooling | 144,000 |
| 202 | Microprocessor | Ambient subcooling | 144,000 |
| 203 | Mechanical | Floating head | 144,000 |
| 204 | Microprocessor | Floating head | 144,000 |
| 205 | Mechanical | Ambient subcooling | 128,000 |
| 206 | Microprocessor | Ambient subcooling | 128,000 |
| 207 | Mechanical | Floating head | 128,000 |
| 208 | Microprocessor | Floating head | 128,000 |
| 209 | Mechanical | Ambient subcooling | 112,000 |
| 210 | Microprocessor | Ambient subcooling | 112,000 |
| 211 | Mechanical | Floating head | 112,000 |
| 212 | Microprocessor | Floating head | 112,000 |

estimated to be 160,000 Btu/hr for an evaporator temperature of -20°F and a condenser temperature of 120°F. Higher refrigeration part loads were used for the R-502 tests because of the warmer ambient temperatures experienced during these tests. An attempt was made to match the refrigeration load expected to the actual ambient conditions experienced.

The suction pressure control settings used for the R-12 and R-502 tests comparing mechanical control to microprocessor control are shown in Table 5. The settings with microprocessor control, CI(0) and CO(0), represent the desired operating pressure band. As long as the suction pressure remains within this band, no change to the compressor capacity state is made. If the pressure deviates from this band, the controller will adjust the compressor capacity state by turning on or off one or more compressors. For the R-12 tests, it was determined that the correct evaporator temperature could be maintained at a suction pressure of 17 psig. With microprocessor control, an inner control band of 4 psi was used. This was found to be the minimum band that could be employed without excessive compressor cycling. A minimum 2 min delay is imposed before a compressor is allowed to turn on again after cycling off. For the mechanical control settings, the cut-in and cut-out pressures were set so that all

TABLE 5. - Suction pressure control settings

| Mechanical control | | | Microprocessor control |
|---|---|---|---|
| | Cut-in pressure (psig) | Cut-out pressure (psig) | |
| R-12 | | | |
| 20 hp<br>10 hp<br>5 hp | 19<br>22<br>20 | 6<br>8<br>11 | CI(0) - 19<br>CO(0) - 14 |
| R-502 | | | |
| 20 hp<br>10 hp<br>5 hp | 15<br>19<br>17 | 3<br>5<br>7 | CI(0) - 15<br>CO(0) - 11 |
| R-12 - Desired suction pressures - 17 psig.<br>R-502 - Desired suction pressures - 13 psig. | | | |

possible compressor combinations between 20 and 35 hp were available. The pressure settings are overlapped to accomplish this. For the R-502 tests, a suction pressure of 13 psig was desired. The pressure control settings were arranged at similar intervals about this pressure as was done for the R-12 control settings.

### 3.2 Heat Reclaim Modeling

A set of 12 tests was conducted in which heat reclaim was used. Both first and second stage heat reclaim were employed. In first stage heat reclaim, the compressor discharge gas is desuperheated. For second stage heat reclaim, the condenser pressure is raised so that condensing occurs within the heat reclaim unit.

In a supermarket, the heat reclaim unit is controlled by a two-stage thermostat. The lowering of the temperature to the first set point initiates first stage heat reclaim. If the temperature drops to the second set point, second stage heat reclaim begins.

For the testing, a timer was used to simulate the thermostat control. The timer was set on an 8-hr cycle that was divided as follows:

a. Hr 0 to 2 - No heat reclaim

b. Hr 2 to 4 - First stage heat reclaim

c. Hr 4 to 6 - Second stage heat reclaim

d. Hr 6 to 8 - No heat reclaim.

This cycle was repeated every 8 hr.

# 4. R-12 TEST RESULTS

Two sets of tests were conducted on the system using R-12 as the refrigerant. The first set consisted of 16 tests. Microprocessor control and mechanical control were used alternately to control the suction pressure. The head pressure control was changed between ambient subcooling and floating head. Heat reclaim was not employed for these tests. In the second set of eight tests, the suction and head pressure controls were again alternated and heat reclaim was employed.

The evaporator temperature for all of these tests was maintained at 20°F, representative of a medium temperature refrigeration system.

## 4.1 Results of the R-12 Tests without Heat Reclaim

A summary of the data taken for the R-12 test is presented in Table 6. Each test has been assigned a test number 101 to 116. The suction pressure and head pressure control types employed are indicated. Also presented are the average refrigeration load supplied and power consumed during each test. The values are used to calculate the resulting EER for the test. Values are presented for EERs based upon both compressor and total system power consumptions. The remainder of the columns describe the ambient and operating conditions during the tests. High, low, and average values are shown for the ambient temperature and the condensing pressure. Average values are also presented for the suction pressure.

The test data shown in Table 6 were analyzed by performing a regression analysis. The dependent variable for this analysis is the power consumption of the system. There are six independent variables which are:

a. Suction pressure control type - Either microprocessor or mechanical control

b. Head pressure control type - Either floating head or ambient subcooling control

c. Refrigeration load

d. Ambient temperature.

There are four system configurations that can be employed. They are:

a. Microprocessor control, floating head (0, 0)

b. Microprocessor control, ambient subcooling (0, 1)

TABLE 6. - Summary of the results and test conditions for the R-12 tests without heat reclaim

| Test No. | Suction pressure Control type | Head pressure control type | Average refrigeration supplied (Btu/hr) | Average power consumed (kW) | | EER (Btu/hr/W) | | Ambient temperature range (°F) | | | Condensing pressure range (psig) | | | Average suction pressure (psig) |
|---|---|---|---|---|---|---|---|---|---|---|---|---|---|---|
| | | | | Compressor | Total system | Compressor | Total system | High | Low | Average | High | Low | Average | |
| 101 | Mechanical | Ambient subcooling | 170,000 | 19.0 | 21.5 | 8.95 | 7.91 | 58.8 | 37.6 | 48.5 | 111.1 | 93.0 | 96.2 | 15.4 |
| 102 | Micro-processor | Ambient subcooling | 168,900 | 17.0 | 19.5 | 9.94 | 8.66 | 50.9 | 46.0 | 47.8 | 127.8 | 90.6 | 96.3 | 16.2 |
| 103 | Mechanical | Floating head | 152,500 | 14.8 | 17.4 | 10.30 | 8.76 | 52.2 | 29.2 | 40.0 | 71.0 | 53.1 | 61.9 | 15.4 |
| 104 | Micro-processor | Floating head | 148,900 | 14.0 | 16.6 | 10.64 | 8.97 | 50.2 | 30.2 | 39.6 | 74.8 | 54.9 | 63.0 | 16.5 |
| 105 | Mechanical | Ambient subcooling | 137,600 | 15.8 | 18.4 | 8.69 | 7.49 | 54.0 | 42.9 | 47.4 | 90.1 | 87.7 | 88.7 | 13.0 |
| 106 | Micro-processor | Ambient subcooling | 135,800 | 13.8 | 16.4 | 9.82 | 8.29 | 47.9 | 41.5 | 43.4 | 88.6 | 87.9 | 84.5 | 16.8 |
| 107 | Mechanical | Floating head | 141,400 | 12.3 | 14.6 | 11.50 | 9.68 | 47.2 | 25.6 | 34.2 | 61.8 | 51.0 | 54.0 | 16.0 |
| 108 | Micro-processor | Floating head | 141,700 | 11.8 | 14.7 | 12.00 | 4.85 | 47.1 | 38.9 | 40.8 | 62.4 | 53.0 | 54.4 | 16.7 |
| 109 | Mechanical | Ambient subcooling | | | | NO DATA TAKEN FOR THIS TEST | | | | | | | | |
| 110 | Micro-processor | Ambient subcooling | 132,500 | 12.5 | 15.0 | 10.60 | 8.83 | 43.3 | 21.9 | 33.2 | 94.4 | 84.4 | 85.7 | 17.2 |
| 111 | Mechanical | Floating head | 129,600 | 9.9 | 12.6 | 13.13 | 10.30 | 40.5 | 12.5 | 23.6 | 55.4 | 45.3 | 48.6 | 16.3 |
| 112 | Micro-processor | Floating head | 118,900 | 9.8 | 12.3 | 12.13 | 9.67 | 53.1 | 26.9 | 37.7 | 67.9 | 49.7 | 55.4 | 17.1 |
| 113 | Mechanical | Ambient subcooling | 115,500 | 12.7 | 15.2 | 9.09 | 7.60 | 43.1 | 33.6 | 36.8 | 88.0 | 85.5 | 82.9 | 14.8 |
| 114 | Micro-processor | Ambient subcooling | 112,100 | 11.1 | 13.6 | 10.14 | 8.20 | 35.7 | 32.0 | 33.7 | 88.3 | 84.9 | 85.4 | 16.4 |
| 115 | Mechanical | Floating head | 108,000 | 9.4 | 11.9 | 11.48 | 9.05 | 46.8 | 29.0 | 34.6 | 58.9 | 45.0 | 49.2 | 12.8 |
| 116 | Micro-processor | Floating head | 103,000 | 7.9 | 10.4 | 13.04 | 9.90 | 36.7 | 8.1 | 22.6 | 50.7 | 44.7 | 46.9 | 16.3 |

c. Mechanical control, floating head (1, 0)

d. Mechanical control, ambient subcooling (1, 1).

Through a regression analysis the power consumption for each of these system configurations was determined as a function of refrigeration load and ambient temperature. The resulting equations are as follows:

$$kW(0, 0) = -1.702 + 9.478 \times 10^{-5}(REF) + 0.087(TA) \quad (7)$$

$$kW(0, 1) = -0.328 + 9.478 \times 10^{-5}(REF) + 0.087(TA) \quad (8)$$

$$kW(1, 0) = -1.347 + 9.478 \times 10^{-5}(REF) + 0.087(TA) \quad (9)$$

$$kW(1, 1) = 1.153 + 9.478 \times 10^{-5}(REF) + 0.087(TA) \quad (10)$$

where

kW = system power consumption (kW)

REF = the refrigeration load (Btu/hr)

TA = the ambient temperature ($^{o}F$)

The power consumption was then calculated for the four system configuration listed above. The average test conditions of a refrigeration load of 134,430 Btu/hr and an ambient temperature of 37.6$^{o}$F were used for these calculations. The EER for each system configuration was then determined based on the average refrigeration load, ambient temperature and the resulting power consumption. The results are shown in Table 7.

The improvement in EER realized by using different system configurations is calculated from the following equation:

$$\text{Percent improvement} = \frac{EER_{ADV} - EER_{BASE}}{EER_{BASE}} \times 100 \quad (11)$$

where

ADV = the advanced system refers to the system configuration of interest

BASE = the base system used for comparison

TABLE 7. - The calculated power configuration and EER for the four system configurations of the R-12 tests without heat reclaim

| Suction pressure control type | Head pressure control type | *Power consumed (kW) | EER (Btu/W-hr) |
|---|---|---|---|
| Microprocessor (0) | Floating head (0) | 14.31 | 9.39 |
| Microprocessor (0) | Ambient subcooling (1) | 15.68 | 8.57 |
| Mechanical (1) | Floating head (0) | 14.66 | 9.17 |
| Mechanical (1) | Ambient subcooling (1) | 17.16 | 7.83 |

*Based on a refrigeration load of 134,400 Btu/hr and an outside ambient temperature of 39°F.

For instance, if the base system consists of mechanical control and floating head control, and the effects of utilizing microprocessor control is desired, the following increase would be calculated:

$$\text{Percent improvement} = \frac{9.39 - 9.17}{9.17} \times 100 \qquad (12)$$

$$= 24 \text{ percent}$$

In order to determine the actual energy savings corresponding to the improvement in system EER, the following equation is used:

$$\text{Percent improvement} = \frac{\text{Power consumed}_{BASE} - \text{Power consumed}_{ADV}}{\text{Power consumed}_{BASE}} \qquad (13)$$

Improvement in EER and decrease in energy consumption were calculated as previously described. The results are presented in Table 8. The maximum decrease in energy consumption for an unequal, parallel compressor system was achieved when microprocessor control and floating head control were employed.

A description of the operation of the compressors for each of the tests is given in Table 9. The frequency of operation of the compressors at the available capacity states is given. It can be seen, in general, that when mechanical control is employed, most of the operating time is spent at one compressor capacity state. In contrast, when microprocessor control is employed, the compressor operation is divided over several compressor capacity states. For example, for the case of test number 112, 26 percent of the time a total of 10 hp of compressor capacity was utilized; 51 percent of the time 15 hp was utilized; 22 percent of the time 20 hp was utilized; and less than 1 percent of the time 25 hp was utilized.

The effect of this compressor control on system performance is illustrated in Figures 5 through 7. Plots of time versus refrigeration load, suction pressure, and system EER are presented for test numbers 105 and 106. The refrigeration load for both tests is shown in Figure 5. In both tests there was a considerable deviation of the load from the average refrigeration load. Figure 6 shows the corresponding suction pressures for both tests. The suction pressure with microprocessor control is higher and shows less variation which indicates better suction pressure control. The system EERs versus time for test numbers 105 and 106 are shown in Figure 7. Microprocessor control consistently produced a higher EER.

### 4.2 Results of the R-12 Tests with Heat Reclaim

First and second stage heat reclaim were employed in test numbers 117 through 124. The operation of the heat reclaim was controlled by a timer as was described previously. Mechanical control and microprocessor control were used alternately as were ambient subcooling and floating head control. The results of these tests are shown in Table 10. The format for this table is the same as that of Table 6.

TABLE 8. - Percent decrease in energy consumption for the four system configurations of the R-12 tests without heat reclaim

| Advanced System | Base System | Decrease in energy consumption of the advanced system (%) | Improvement in EER (%) |
|---|---|---|---|
| Microprocessor; floating head | Mechanical; floating head | 2.4 | 2.4 |
| Microprocessor; ambient subcooling | Mechanical; ambient subcooling | 8.6 | 9.4 |
| Microprocessor; floating head | Microprocessor; ambient subcooling | 8.7 | 9.6 |
| Mechanical; floating head | Mechanical; ambient subcooling | 14.6 | 17.1 |
| Microprocessor; floating head | Mechanical; ambient subcooling | 16.6 | 19.9 |

TABLE 9. - Frequency of occurrence of a given compressor operating state for the R-12 tests without heat reclaim

| Test No. | Suction pressure control type | Compressor operating states (percentage of total operating time) | | | | | | | Average refrigeration load (Btu/hr) | EER (Btu/hr/W) | |
|---|---|---|---|---|---|---|---|---|---|---|---|
| | | 5 hp | 10 hp | 15 hp | 20 hp | 25 hp | 30 hp | 35 hp | | Compressor | Total system |
| 101 | Mechanical | | | | <1 | 21 | 78 | <1 | 170,000 | 8.95 | 7.91 |
| 102 | Microprocessor | | | | <1 | 35 | 63 | 1 | 168,900 | 9.94 | 8.66 |
| 103 | Mechanical | | | | <1 | 98 | 1 | <1 | 152,800 | 10.30 | 8.76 |
| 104 | Microprocessor | | | <1 | 25 | 74 | <1 | | 148,900 | 10.64 | 8.97 |
| 105 | Mechanical | | | | 1 | 74 | 25 | <1 | 137,600 | 8.69 | 7.49 |
| 106 | Microprocessor | | | <1 | 48 | 51 | <1 | <1 | 135,800 | 9.82 | 8.29 |
| 107 | Mechanical | | | | 73 | 26 | <1 | <1 | 141,400 | 11.50 | 9.68 |
| 108 | Microprocessor | | <1 | 3 | 63 | 33 | <1 | | 141,700 | 12.00 | 9.85 |
| 109 | Mechanical | | | | 81 | 18 | | <1 | 129,300 | 10.43 | 8.62 |
| 110 | Microprocessor | | <1 | 8 | 69 | 22 | | | 132,500 | 10.60 | 8.83 |
| 111 | Mechanical | | | | 100 | | | | 129,600 | 13.13 | 10.30 |
| 112 | Microprocessor | | 26 | 51 | 22 | <1 | | | 118,900 | 12.13 | 9.67 |
| 113 | Mechanical | | | | 100 | | | | 115,500 | 8.32 | 6.73 |
| 114 | Microprocessor | 2 | 24 | 66 | 7 | <1 | <1 | <1 | 112,100 | 10.14 | 8.20 |
| 115 | Mechanical | | | | 100 | | | | 108,000 | 11.48 | 9.05 |
| 116 | Microprocessor | 7 | 50 | 42 | <1 | <1 | | <1 | 103,000 | 13.04 | 9.90 |

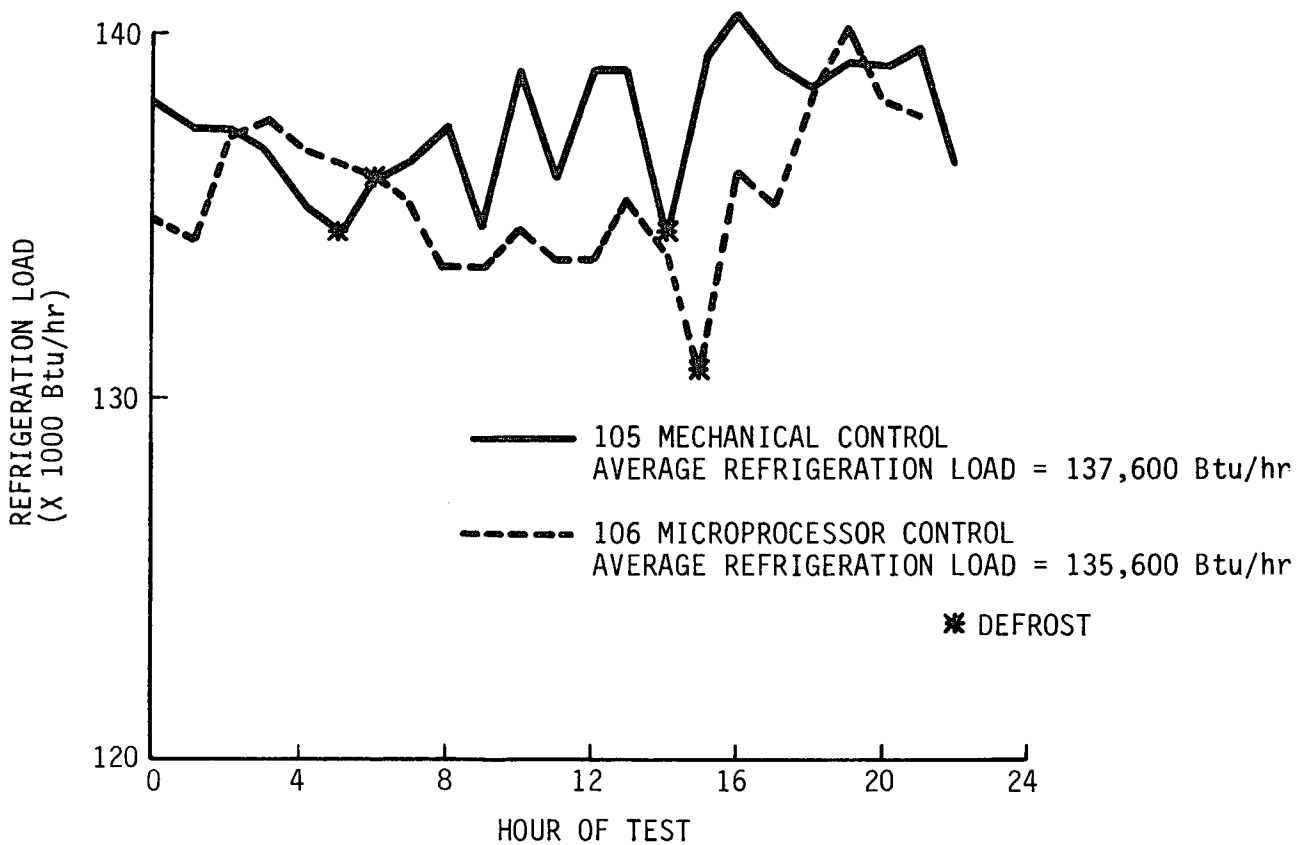


FIGURE 5. - Refrigeration load history for test numbers 105 and 106.

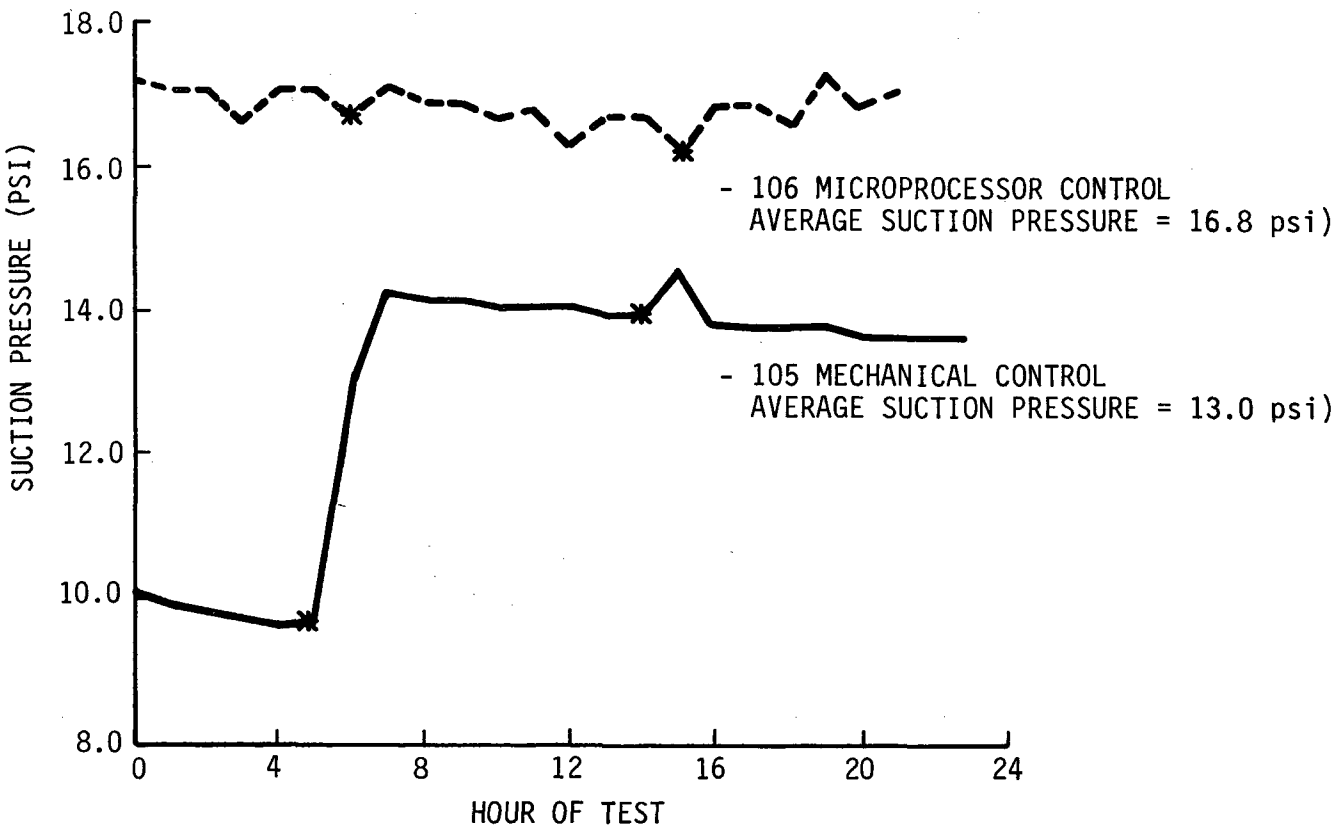


FIGURE 6. - Suction pressure history for test numbers 105 and 106.

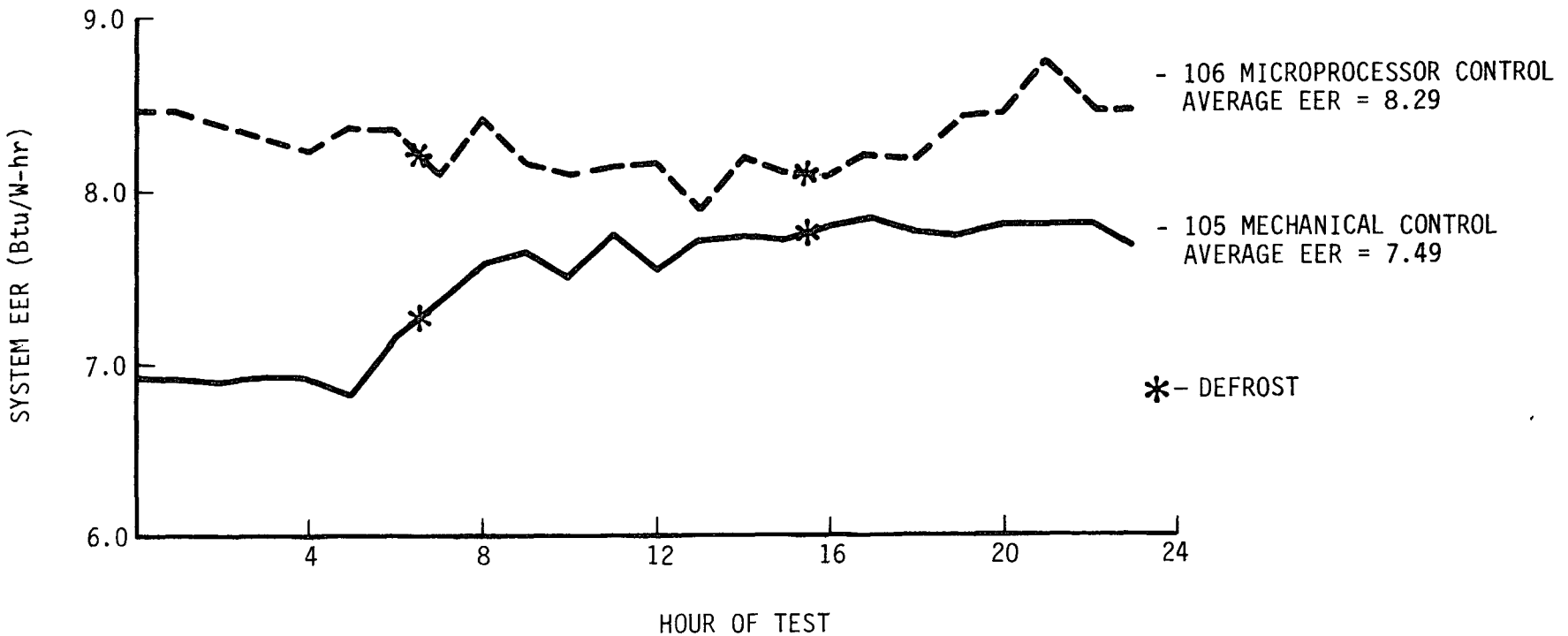


FIGURE 7. - System EER history for test numbers 105 and 106.

TABLE 10. - Summary of the results and test conditions for the R-12 tests with heat reclaim

| Test No. | Suction pressure control type | Head pressure control type | Average refrigeration supplied (Btu/hr) | Average power consumed (kW) | | EER (Btu/hr/W) | | Ambient temperature range (°F) | | | Condensing pressure range (psig) | | | Average suction pressure (psig) |
|---|---|---|---|---|---|---|---|---|---|---|---|---|---|---|
| | | | | Compressor | Total system | Compressor | Total system | High | Low | Average | High | Low | Average | |
| 117 | Mechanical | Ambient subcooling | 144,300 | 16.0 | 18.7 | 8.98 | 7.74 | 38.6 | 24.2 | 31.1 | 124.5 | 85.4 | 95.1 | 14.4 |
| 118 | Micro-processor | Ambient subcooling | 143,600 | 15.0 | 17.7 | 9.56 | 8.14 | 37.8 | 17.1 | 26.2 | 123.9 | 85.3 | 94.6 | 16.5 |
| 119 | Mechanical | Floating head | 133,900 | 14.9 | 17.4 | 8.98 | 7.70 | 60.3 | 34.1 | 44.9 | 127.1 | 51.1 | 72.5 | 16.7 |
| 120 | Micro-processor | Floating head | 131,300 | 14.4 | 16.9 | 9.12 | 7.75 | 41.1 | 27.6 | 34.8 | 110.4 | 49.0 | 63.9 | 17.0 |
| 121 | Mechanical | Ambient subcooling | 113,200 | 12.2 | 14.8 | 9.28 | 7.65 | 69.5 | 45.5 | 52.2 | 123.3 | 85.1 | 95.8 | 16.2 |
| 122 | Micro-processor | Ambient subcooling | 116,600 | 12.3 | 14.9 | 9.48 | 7.82 | 54.0 | 27.6 | 38.3 | 133.5 | 84.2 | 94.3 | 16.8 |
| 123 | Mechanical | Floating head | 108,000 | 11.7 | 14.2 | 9.23 | 7.60 | 55.6 | 26.7 | 40.9 | 106.7 | 45.6 | 69.1 | 15.2 |
| 124 | Micro-processor | Floating head | 108,800 | 10.5 | 12.9 | 10.36 | 8.43 | 58.8 | 31.7 | 44.1 | 117.6 | 48.5 | 69.5 | 16.7 |

A regression analysis of the same type as used with the previous results was applied to the heat reclaim test data. Power consumption was again taken as the dependent variable and a relation between it and the refrigeration load and outside ambient temperature was determined. The four possible system configurations mentioned previously were also considered. Using the same nomenclature as that of subsection 4.1 the resulting equations are:

$$kW(0, 0) = -0.405 + 1.281 \times 10^{-4}(REF) - 1.703 \times 10^{-3}(TA) \quad (14)$$

$$kW(0, 1) = -0.304 + 1.281 \times 10^{-4}(REF) - 1.703 \times 10^{-3}(TA) \quad (15)$$

$$kW(1, 0) = 0.386 + 1.281 \times 10^{-4}(REF) - 1.703 \times 10^{-3}(TA) \quad (16)$$

$$kW(1, 1) = 0.335 + 1.281 \times 10^{-4}(REF) - 1.703 \times 10^{-3}(TA) \quad (17)$$

The power consumption and system EER were found for each of four configurations at the average test conditions of a refrigeration load of 125,000 Btu/hr and an outside ambient temperature of 39°F. The results of these calculations are presented in Table 11.

Improvement in EER and decrease in energy consumption were calculated in the same fashion as described in subsection 4.1. These results are presented in Table 12.

The EERs recorded for these tests are in general lower than those of the R-12 tests without heat reclaim. A plot of compressor EER versus time for test number 118 is shown in Figure 8. The periods of operation of the system in first and second stage heat reclaim are indicated in this figure. It can be seen that

TABLE 11. - The calculated power consumption and EER for the four system configurations of the R-12 tests with heat reclaim

| Suction pressure control | Head pressure control | *Power consumed (kW) | EER (Btu/W-hr) |
|---|---|---|---|
| Microprocessor (0) | Floating head (0) | 15.53 | 8.04 |
| Microprocessor (0) | Ambient subcooling (1) | 15.63 | 7.99 |
| Mechanical (1) | Floating head (0) | 16.32 | 7.64 |
| Mechanical (1) | Ambient subcooling (1) | 16.27 | 7.66 |

*Based on refrigeration load at 125,000 Btu/hr and outside ambient temperature of 39°F.

TABLE 12. - Percent decrease in energy consumption for the four system configurations of the R-12 tests with heat reclaim

| Advanced system | Base system | Decrease in energy consumption of the advanced system (%) | Improvement in EER (%) |
|---|---|---|---|
| Microprocessor; floating head | Mechanical; floating head | 4.8 | 5.2 |
| Microprocessor; ambient subcooling | Mechanical; ambient subcooling | 3.9 | 4.3 |
| Microprocessor; floating head | Microprocessor; ambient subcooling | 0.6 | 0.6 |
| Mechanical; floating head | Mechanical; ambient subcooling | -0.3 | -0.2 |
| Microprocessor; floating head | Mechanical; ambient subcooling | 4.5 | 5.0 |

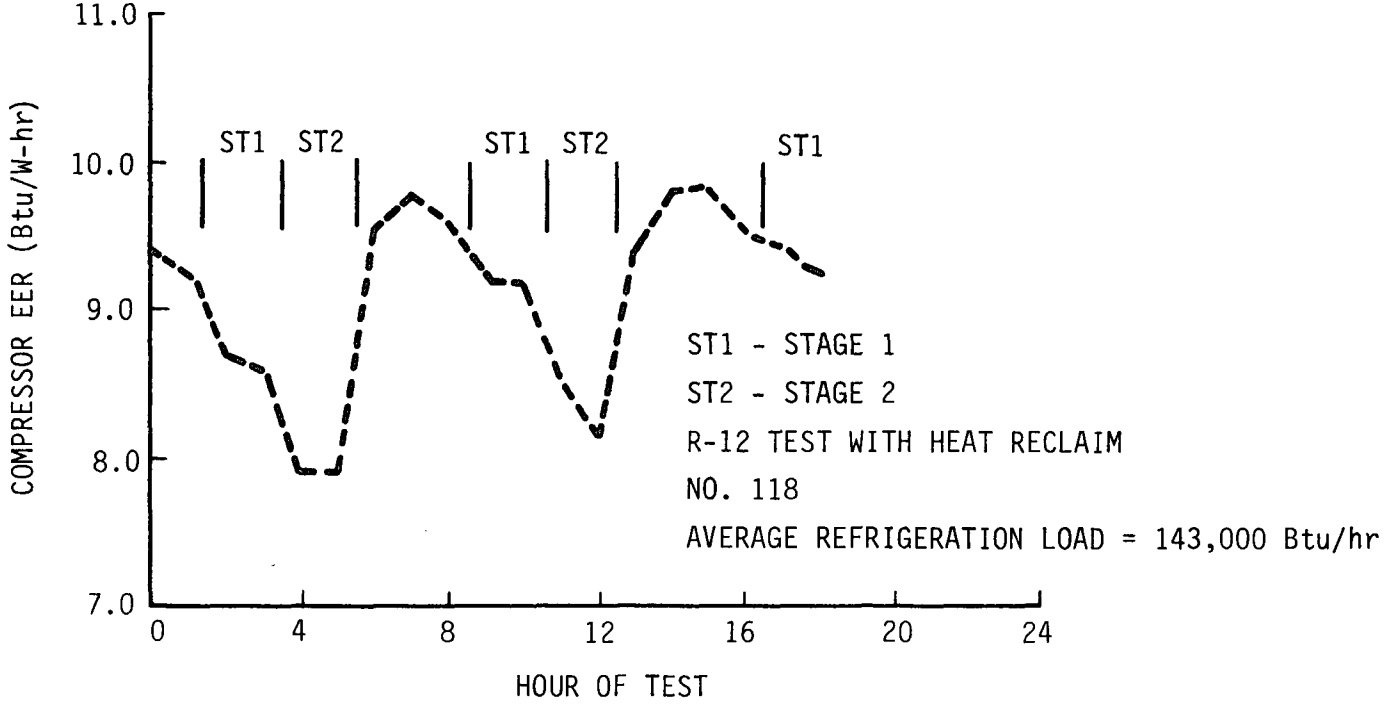


FIGURE 8. - Compressor EER history for test numbers 118. First and second stage heat reclaim operated.

the EER of the compressors is high during no heat reclaim and first stage heat reclaim. EER drops considerably during second stage heat reclaim. This drop can be attributed to the higher condenser pressure incurred during second stage heat reclaim. The condenser pressures listed in Table 10 are considerably higher than those listed in Table 6.

The reduction in EER is more noticeable in the operation with floating head control. Ambient subcooling control appears less sensitive to heat reclaim operation.

## 5. R-502 TEST RESULTS WITHOUT HEAT RECLAIM

A summary of the test conditions and results is presented in Table 13. The format of this table is the same as that used to present the summary of the R-12 results (Table 6). For each test, a test number is indicated along with a description of the suction pressure and head pressure control types. The remaining columns describe test conditions along with load and power measurements. High, low, and average values for each test are shown for ambient temperature and condensing pressure. Only the average suction pressure measured at the suction manifold is listed.

A regression analysis was applied to the test results to determine the power consumption of the systems as a function of refrigeration load and outside ambient temperature. Using the nomenclature described previously, the resulting equations are:

$$kW(0,\ 0) = -17.489 + 2.372 \times 10^{-4}(REF) + 0.173(TA) \quad (18)$$

$$kW(0,\ 1) = -17.425 + 2.372 \times 10^{-4}(REF) + 0.173(TA) \quad (19)$$

$$kW(1,\ 0) = -17.082 + 2.372 \times 10^{-4}(REF) + 0.173(TA) \quad (20)$$

$$kW(1,\ 1) = -16.53 + 2.372 \times 10^{-4}(REF) + 0.173(TA) \quad (21)$$

Power consumption and system EERs were calculated for the four system configurations at an average refrigeration load of 128,000 Btu/hr and an outside ambient temperature of 54°F. These results are presented in Table 14. The improvement in EER and the decrease in energy consumption were determined and are presented in Table 15.

In general, the energy savings were less for the R-502 tests. The amount of energy saved through the use of floating head control is notably less. This could be due to the higher ambient temperature range over which these tests were conducted. As in the R-12 test results, lowest energy consumption was achieved by the unequal, parallel compressor system when microprocessor control and floating head control were employed.

In Table 16, a description of the operation of the compressors during the tests is shown. For each test, the percentage of operating time in each compressor state is shown, along with the average refrigeration load and the EER of the system. In general, no more than two compressor states are employed during

Table 13. - Summary of the results and test conditions for the R-502 tests without heat reclaim

| Test No. | Suction pressure control type | Head pressure control type | Average refrigeration supplied (Btu/hr) | Average power consumed (kW) | | EER (Btu/hr/W) | | Ambient temperature range (°F) | | | Condensing pressure range (psig) | | | Average suction pressure (psig) |
|---|---|---|---|---|---|---|---|---|---|---|---|---|---|---|
| | | | | Compressor | Total system | Compressor | Total system | High | Low | Average | High | Low | Average | |
| 201 | Mechanical | Ambient subcooling | 138,600 | 21.6 | 24.2 | 6.42 | 5.72 | 56.7 | 30.6 | 42.5 | 159.7 | 111.4 | 134.2 | 11.7 |
| 202 | Micro-processor | Ambient subcooling | 149,200 | 22.1 | 24.7 | 6.75 | 6.04 | 53.6 | 29.8 | 40.1 | 167.4 | 118.2 | 137.3 | 13.3 |
| 203 | Mechanical | Floating head | 147,100 | 25.6 | 28.1 | 5.75 | 5.23 | 67.4 | 54.5 | 59.1 | 170.2 | 143.0 | 153.9 | 12.9 |
| 204 | Micro-processor | Floating head | 141,200 | 23.4 | 25.9 | 6.03 | 5.45 | 70.5 | 38.4 | 56.3 | 178.5 | 112.5 | 152.4 | 13.3 |
| 205 | Mechanical | Ambient subcooling | 135,200 | 21.6 | 24.1 | 6.26 | 5.60 | 67.6 | 38.5 | 50.6 | 161.3 | 126.4 | 140.9 | 12.1 |
| 206 | Micro-processor | Ambient subcooling | 137,200 | 23.1 | 25.6 | 5.94 | 5.36 | 74.7 | 43.1 | 59.2 | 174.1 | 133.1 | 155.1 | 12.8 |
| 207 | Mechanical | Floating head | 140,600 | 22.6 | 25.1 | 6.22 | 5.60 | 64.7 | 34.0 | 51.8 | 167.4 | 104.2 | 139.9 | 12.1 |
| 208 | Micro-processor | Floating head | 139,400 | 20.2 | 22.7 | 6.90 | 6.14 | 56.6 | 34.4 | 43.6 | 159.6 | 104.7 | 123.6 | 13.4 |
| 209 | Mechanical | Ambient subcooling | 98,200 | 16.1 | 18.6 | 6.10 | 5.28 | 82.6 | 60.6 | 70.2 | 183.5 | 137.5 | 158.6 | 12.3 |
| 210 | Micro-processor | Ambient subcooling | 104,800 | 16.3 | 18.8 | 6.43 | 5.57 | 85.8 | 56.2 | 65.9 | 189.1 | 129.7 | 149.1 | 13.4 |
| 211 | Mechanical | Floating head | 103,400 | 14.8 | 17.2 | 6.99 | 6.01 | 73.2 | 44.4 | 56.0 | 149.4 | 110.3 | 129.9 | 12.0 |
| 212 | Micro-processor | Floating head | 100,000 | 14.1 | 16.6 | 7.10 | 6.02 | 72.2 | 46.2 | 58.4 | 148.0 | 111.4 | 132.4 | 13.1 |

TABLE 14. - Calculated Power Consumption and System EER for the four system configurations of the R-502 tests without heat reclaim

| Suction pressure control | Head pressure control | * Power consumed (kW) | EER (Btu/W-hr) |
|---|---|---|---|
| Microprocessor (0) | Floating head (0) | 22.21 | 5.76 |
| Microprocessor (0) | Ambient subcooling (0) | 22.28 | 5.74 |
| Mechanical (1) | Floating head (0) | 22.62 | 5.65 |
| Mechanical (1) | Ambient subcooling (1) | 23.17 | 5.52 |

*Based on a refrigeration load of 128,000 Btu/hr and an outside ambient temperature of 54°F.

TABLE 15. - Percent improvement in EER and decrease in energy consumption for the four system configurations of the R-502 tests without heat

| Advanced system | Base system | Decrease in energy consumption (%) | Improvement in EER (%) |
|---|---|---|---|
| Microprocessor; floating head | Mechanical; floating head | 1.8 | 1.5 |
| Microprocessor; ambient subcooling | Mechanical; ambient subcooling | 3.8 | 3.9 |
| Microprocessor; floating head | Microprocessor; ambient subcooling | 0.3 | 0.3 |
| Mechanical; floating head | Mechanical; ambient subcooling | 2.4 | 2.4 |
| Microprocessor; floating head | Mechanical; ambient subcooling | 4.3 | 4.3 |

TABLE 16. - Frequency of occurrence of a given compressor operating state for the R-502 tests

| Test No. | Suction pressure control type | Compressor operating states (percentage of total operating time) | | | | | | | Average refrigeration load (Btu/hr) | EER (Btu/hr/W) | |
|---|---|---|---|---|---|---|---|---|---|---|---|
| | | 5 hp | 10 hp | 15 hp | 20 hp | 25 hp | 30 hp | 35 hp | | Compressor | Total system |
| 201 | Mechanical | | | | | | 71 | 29 | 138,600 | 6.42 | 5.72 |
| 202 | Microprocessor | | | 1 | <1 | <1 | 84 | 14 | 149,200 | 6.75 | 6.04 |
| 203 | Mechanical | | | | | | 7 | 93 | 147,100 | 5.75 | 5.23 |
| 204 | Microprocessor | | | | <1 | 6 | 34 | 60 | 141,200 | 6.03 | 5.45 |
| 205 | Mechanical | | | | 2 | | 76 | 22 | 135,200 | 6.26 | 5.60 |
| 206 | Microprocessor | | | 2 | <1 | <1 | 54 | 43 | 137,200 | 5.94 | 5.36 |
| 207 | Mechanical | | | | | | 61 | 39 | 140,600 | 6.22 | 5.60 |
| 208 | Microprocessor | | | | <1 | 23 | 73 | 3 | 139,400 | 6.90 | 6.14 |
| 209 | Mechanical | | | | 31 | 46 | 23 | <1 | 98,200 | 6.10 | 5.28 |
| 210 | Microprocessor | | <1 | 2 | 18 | 73 | 6 | <1 | 104,800 | 6.43 | 5.57 |
| 211 | Mechanical | | | | 65 | 4 | 30 | <1 | 103,400 | 6.99 | 6.01 |
| 212 | Microprocessor | | | <1 | 62 | 36 | <1 | <1 | 100,000 | 7.10 | 6.02 |

any of the tests using mechanical control. In the tests where the microprocessor control system was used, as many as six compressor states were observed, suggesting that this system is more sensitive to load change. Compressor state is, therefore, altered more frequently. In several of the tests with microprocessor control, a large amount of operating time occurred in one particular compressor state. This was not observed in the R-12 tests and suggests that the operation of the R-502 system is more stable. It is possible that a smaller pressure control band could have been employed, resulting in greater efficiency for the system with microprocessor control.

For the R-502 tests employing ambient subcooling control, the minimum condensing pressure was set at 137 psig, corresponding to a condensing temperature of 70°F. In several of the tests, lower condensing pressures were recorded. This was due either to a malfunction of the head pressure regulator or, more likely, insufficient refrigerant charge to fill the condenser. For this reason, the systems with ambient subcooling control and floating head control both operated over a similar condensing pressure range. It should also be noted that the ambient temperatures were, on the average, above 50°F. At these temperatures, the condensing pressures were higher than the minimum. As a result, there was not a significant difference in the EERs obtained by either of these systems. The highest EERs for the R-502 tests were recorded for floating head control.

## 6. CONCLUSIONS AND RECOMMENDATIONS

The major results and conclusions of the unequal, parallel compressor test program can be summarized as follows:

a. R-12 tests without heat reclaim:

   1. The largest energy savings were recorded in these tests. The major factor contributing to these savings was the use of floating head control. Analysis of the data showed that use of this control, rather than ambient subcooling, produced a 14.6 percent reduction in energy consumption.

   2. The largest savings in energy consumption was recorded by the unequal, parallel compressor system when microprocessor control and floating head control were employed. In comparing this system configuration with one employing mechanical control and ambient subcooling, an energy savings of 16.6 percent was realized.

b. R-12 tests with heat reclaim:

   1. The EERs found in these tests were lower than those established in the tests without heat reclaim. The reason for this is believed to be the use of second stage heat reclaim. It was found that the EER of the system decreased noticeably during the use of second stage heat reclaim because of the artificial raising of the condensing pressure.

   2. In general, heat reclaim had less effect on the system EER when ambient subcooling control was employed, rather than floating head control.

   3. The lowest energy consumption was recorded by the system when microprocessor control and floating head control were employed. The EER of this system for the average test condition was 8.04 Btu/W-hr while the EER of this system employing mechanical control and ambient subcooling was 7.66. The energy savings achieved by the unequal, parallel compressor system when employing microprocessor control and floating head control was 4.5 percent for these same conditions.

c. R-502 tests without heat reclaim:

1. The highest EER value was recorded for the system employing microprocessor control and floating head control. The EER calculated for the average test condition was 5.76.

2. The greatest decrease in energy consumption was recorded by the system employing microprocessor control and floating head control. When compared to the configuration consisting of mechanical control and ambient subcooling, a decrease of 4.3 percent in energy consumption was realized.

3. The condenser operating conditions were similar for all tests. This was due to a lower head pressure setting for the ambient subcooling and higher ambient temperatures that reduced the effect of floating head operation. The results showed that only a 0.3 percent decrease in energy consumption was achieved by the use of floating head rather than ambient subcooling. The remainder of the energy savings mentioned in Conclusion 2 was, therefore, due to the use of microprocessor control rather than mechanical control.

Some further observations concerning the heat reclaim tests should be made. The results presented only address the effect of heat reclaim on refrigeration system performance. No attempt has been made to include the benefits gained by the use of heat reclaim. The value of heat reclaim is that heat energy removed from the sales area by the refrigeration system is not totally rejected. In such a case, the heat removed must be replaced by energy expended by the HVAC system. In many instances the savings in space heating gained by the use of heat reclaim are substantial. The results found in this test program show only that there is a refrigeration system performance penalty incurred while saving energy for space heating. These results also suggest that further analysis of the interaction between the refrigeration, heat reclaim, and HVAC systems is warranted. Such an analysis could investigate the tradeoffs involved and improve the overall system design for a supermarket.

The test results show conclusively that microprocessor control maximizes the performance of an unequal, parallel compressor system regardless of the condenser control scheme employed. The results also show that floating head control is superior to conventional condenser control systems, particularly for low ambient temperatures.

# 7. REFERENCES


1. Toscano, W.M., D.M. Heston, I.P. Krepchin, K. Lee, M.J. Oven, and D.H. Walker, "Research and Development of Highly Energy-Efficient Supermarket Refrigeration Systems, Volume 1 - Executive Summary and Task Reports," ORNL/Sub/80-6160/1, Foster-Miller Associates, Inc., October 1981.

2. Toscano, W.M., M.J. Oven, D.H. Walker, E.A. Vineyard, and W.L. Cooper, Jr., "Design and Laboratory Testing of an Unequal, Parallel Multicompressor Supermarket Refrigeration System," ASHRAE Transaction, Volume 38, Part 2, 1982.