October 1981

ORNL/Sub/80-61601/1
Dist. Category UC-95d

RESEARCH AND DEVELOPMENT OF HIGHLY ENERGY-EFFICIENT SUPERMARKET REFRIGERATION SYSTEMS

VOLUME 1 - EXECUTIVE SUMMARY AND TASK REPORTS

William M. Toscano
Dennis M. Heaton
Ira P. Krepchin
Kangpil Lee
Mark J. Oven
David H. Walker

Report prepared by

FOSTER-MILLER ASSOCIATES, INC.
350 Second Avenue
Waltham, Massachusetts 02254

Under

Subcontract 86X-61601C

for

OAK RIDGE NATIONAL LABORATORY
Oak Ridge, Tennessee 37830

operated by

UNION CARBIDE CORPORATION

for the

U.S. Department of Energy

Under Contract No. W-7405-eng-26

FOREWORD

Foster-Miller Associates has contracted with Union Carbide Corporation, Nuclear Division, to perform the following tasks in the research and development of a highly energy-efficient supermarket refrigeration system:

Task 1 - System Analysis: A marketing analysis of the supermarket industry and a thermodynamic analysis of supermarket energy systems were performed to determine viable system improvements which would result in energy efficiency improvements in the supermarket refrigeration system.

Task 2 - Technical Development: A thermodynamic/economic optimization of the unequal compressor system with electronic control system was performed. Next, this refrigeration system was designed and fabricated. Laboratory testing of the prototype unequal parallel compressor system with both microprocessor and mechanical control systems was performed. In parallel with the refrigeration system development, a display case analysis and conceptual design effort was performed.

Task 3 - Engineering Evaluation Test Plan: A detailed engineering evaluation test plan for engineering evaluation of the refrigeration system was prepared.

Task 4 - Research and Development Report: A report which includes an executive summary and task reports documenting all work performed was prepared.

As each of the above tasks was completed, a task summary report was prepared.

The Volume I report consists of an executive summary and the following five task summary reports:

Task 1 Report - Systems and Market Analysis

Task 2 Report - System Design and Test Plan

Task 2 Report - Display Case Analysis and Design Study

Task 2 Report - System Fabrication and Test Results

Task 3 Report - Engineering Evaluation Test Plan.

ABSTRACT

The Supermarket Energy Systems Project was structured to investigate and develop new highly energy-efficient supermarket refrigeration systems. A market and system analysis was performed for supermarket energy systems. The market analysis describes the overall structure of the supermarket industry as well as the distribution of energy-using systems in a typical supermarket. The market analysis evaluates the supermarket industry and the typical supermarket as customers buying energy-saving equipment. The systems analysis includes all supermarket energy-saving systems, but focuses on the refrigeration system, the major energy-consuming system in a supermarket. A computer simulation program for supermarket refrigeration has been developed and has been used to perform a sensitivity analysis, identifying those improvements or changes to the refrigeration system which offer the greatest energy-saving potential. Energy-saving improvements are described and evaluated. The results of the marketing and system analyses are combined with government, manufacturer, and customer criteria to rank various energy-saving improvements in order of desirability for further study, development, and commercialization. As a result, an unequal parallel compressor system, in combination with floating head-pressure controls and a microprocessor-based electronic suction pressure control, are recommended for design and experimental investigation.

A supermarket refrigeration system consisting of:

- Unequal, parallel compressors
- Condenser with floating head-pressure control
- Microprocessor-based electronic control system

was analyzed, designed and fabricated. The total system capacity is 35 hp and three compressors of 5, 10, and 20 hp capacity were determined to be the optimum number and capacity distribution. Compared to the conventional supermarket refrigeration systems, the three unequal, parallel compressor system with R-12 is estimated to achieve a maximum annual energy savings of 29,100 kWhr or 26 percent and with R-502, a maximum annual energy savings of 20,100 kWhr or 15 percent.

A compressor capacity control algorithm was designed to select the optimum compressor combination for each operating condition to match compressor capacity to refrigeration load. A microprocessor system based on an Intel 8085 microprocessor was selected for system control and data acquisition. The economic analysis revealed that for a payback period of 3 years or less, an added microprocessor-based electronic controls cost between $500 to $1500 is acceptable, depending on the refrigerant used and the refrigeration load.

In parallel with the system design, a display case analysis and design study was performed. A display case computer model consisting of subroutines which analyze the various display case subsystems was developed. The computer model was validated with experimental data and a parametric sensitivity analysis was performed to determine the effects of the important thermodynamic parameters on the tub-type display case performance. Both near-term design improvements and new conceptual designs for display cases were prepared.

Testing was performed on the unequal, parallel compressor system over a refrigeration load range of 78,000 to 160,000 Btu/hr. For refrigerant R-12, the increase in the energy efficiency ratio (EER) for the microprocessor-based electronic control system as compared to the mechanical pressure control system ranged from 9.8 to 12.5 percent.

An engineering evaluation test plan for Phase III was prepared. Boston and San Antonio were selected as sites for testing of the preproduction prototype unequal, parallel compressor system.

ACKNOWLEDGEMENTS

The development team consisted of Foster-Miller Associates, Inc. (FMA), and Friedrich Air Conditioning and Refrigeration Co. (Friedrich). The Supermarket Advisory Committee, comprised of supermarket industry representatives, provided advisory consulting and program guidance. Program participants included:

a. FMA:

William Toscano - Program Manager
Dennis M. Heaton
Ira Krepchin
Kangpil Lee
Mark Oven
David Walker

b. Friedrich:

Dieter Grether - Principal Investigator
Jack Biggers
Glenn Fowler
Joe Overman
Dean Calton

c. Supermarket Advisory Committee:

Mel Anstine - H.E. Butt Grocery Co.

Harold Fine - The Stop and Shop Companies, Inc. (Food Marketing Institute Representative)

George Gamache - Star Market Co.

Henri Korb - Safeway Stores, Inc.

Considerable technical and management support was provided by Messrs. Virgil Haynes of Oak Ridge National Laboratory (ORNL) and Ronald Fiskum of the Department of Energy (DOE). Messrs. William Cooper, Jr. and Edward Vineyard, the ORNL technical monitors for the program, contributed significantly to the technical direction of the total program.

Mr. Todd Mann of the Food Marketing Institute provided considerable marketing and technical information and participated in many of the program review meetings. His participation is very much appreciated.

TABLE OF CONTENTS

Section	Page
FOREWORD	iii
ABSTRACT	v
ACKNOWLEDGEMENTS	vii
EXECUTIVE SUMMARY	xiii
TASK 1 REPORT - SYSTEM AND MARKET ANALYSIS	1-iii
TASK 2 REPORT - SYSTEM DESIGN AND TEST PLAN	2-iii
TASK 2 REPORT - DISPLAY CASE ANALYSIS AND DESIGN STUDY	3-iii
TASK 2 REPORT - SYSTEM FABRICATION AND TEST RESULTS	4-iii
TASK 3 REPORT - ENGINEERING EVALUATION TEST PLAN	5-iii

HIGHLY ENERGY-EFFICIENT SUPERMARKET SYSTEMS

EXECUTIVE SUMMARY

TABLE OF CONTENTS

Executive Summary

Section		Page
1.	INTRODUCTION	xvii
2.	SYSTEM AND MARKET ANALYSIS	xix
3.	SYSTEM DESIGN AND TEST PLAN	xxv
4.	DISPLAY CASE ANALYSIS AND DESIGN STUDY	xxxiv
5.	SYSTEM FABRICATION AND TEST RESULTS	xxxviii
6.	ENGINEERING EVALUATION TEST PLAN	xlv
7.	CONCLUSIONS AND RECOMMENDATIONS	xlvii
8.	REFERENCES	l
	APPENDIX A - STATEMENT OF WORK	li

LIST OF ILLUSTRATIONS

Figure		Page
ES-1.	Energy relationships among various supermarket systems	xxii
ES-2.	Elements of the experimental supermarket refrigeration system	xxxi
ES-3.	Refrigeration load model	xxxii
ES-4.	Energy balance of tub display case: control volume analysis	xxxv
ES-5.	Experimental refrigeration system	xxxix
ES-6.	The unequal parallel compressors mounted on the compressor rack	xl
ES-7.	Microprocessor-based controller and data logger	xli

LIST OF TABLES

Table		Page
ES-1.	Energy consumption by store type (2,3,4)	xx
ES-2.	Approximate supermarket energy usage	xxi
ES-3.	Annual energy consumption analysis for the unequal parallel compressor supermarket refrigeration system	xxvii
ES-4.	Life cycle savings analysis of unequal parallel compressor refrigeration systems	xxviii
ES-5.	Annual electrical energy consumption comparison of three unequal parallel compressor and conventional supermarket refrigeration systems	xxvix
ES-6.	Model verification (Refrigerant 502)	xxxvi
ES-7.	Pressure settings for the microprocessor-based electronic compressor control	xlii
ES-8.	Mechanical pressure control settings for the unequal parallel compressors	xliii
ES-9.	Results of the comparison test between microprocessor-based electronic control and mechanical pressure control of the experimental refrigeration system	xliv

1. INTRODUCTION

The supermarket industry presently utilizes 4 percent (88 billion kWhr) of the annual national electric energy consumption (1). There is a tremendous potential for energy conservation in the supermarket industry. The major area of energy savings is the refrigeration system for display cases, which accounts for approximately 40 to 60 percent of the total supermarket energy consumption. The remaining store energy requirement is proportioned as follows: the heating, ventilating and air conditioning system (HVAC) accounts for 15 to 20 percent; the lighting accounts for 20 to 25 percent; and miscellaneous energy systems account for 5 to 10 percent. Each of these energy systems can be improved and optimized for individual system performance; however, complex relationships exist among these systems and the improvement of one energy system may be detrimental to the performance of the remaining energy systems.

The Supermarket Energy Systems Project, which is divided into three phases, was designed to investigate and develop new highly energy-efficient supermarket refrigeration systems. Phases I and II were arranged to accomplish the following:

a. Phase I - System and Market Analysis:

   1. Review the overall energy requirements in stores and supermarkets

   2. Develop a thermodynamic computer program for the analysis of supermarket refrigeration systems

   3. Perform a marketing analysis of the supermarket industry, supermarket energy systems equipment manufacturing industry, and proposed new energy-efficient refrigeration systems

   4. Investigate and recommend new energy saving concepts and systems for development.

b. Phase II - Technical Development and Engineering Evaluation Test Plan

   1. Optimize the recommended supermarket refrigeration system

   2. Design and perform laboratory testing of a prototype refrigeration system

   3. Perform analysis and conceptual design of display cases

4. Prepare an Engineering Evaluation Test Plan for testing of the prototype refrigeration system in a supermarket.

The cumulation of the Phase I and II efforts has resulted in the development of a prototype unequal, parallel compressor refrigeration system with a microprocessor-based electronic control system. Also, a computer program for the analysis of open tub-type display cases has been formulated and new display case improvements have been generated. Preliminary test results have indicated that the prototype supermarket refrigeration system with proposed display case design improvements will reduce the supermarket refrigeration energy requirements by 40 percent. This equates to an annual national energy savings of approximately 14 to 21 billion kWhr if the refrigeration system is installed in all existing supermarkets.

For the successful execution and completion of Phases I and II, Foster-Miller Associates, Inc., (FMA), the primary contractor on this program, teamed with Friedrich Air Conditioning and Refrigeration Company (Friedrich), to provide a broad base of technical, marketing, and manufacturing experience. FMA was responsible for the program management, computer model development, systems analysis, design, and supervision of testing. Friedrich provided support in marketing and manufacturing, and experience in refrigeration system design. To provide customer, that is, supermarket, input to this program, FMA assembled a Supermarket Advisory Committee. This committee is composed of refrigeration and energy conservation experts for major supermarket chain organizations, such as Safeway Stores, Inc., Stop and Shop Company, H.E. Butt Grocery Company, Star Market Company, and Giant Foods, Inc., as well as the Food Marketing Institute. The committee met with representatives from FMA, Friedrich, DOE and Oak Ridge National Laboratories (ORNL) at 6- to 12-month intervals.

2. SYSTEM AND MARKET ANALYSIS

The purpose of the market analysis is twofold:

a. To obtain a general description of the composition and behavior of the supermarket industry

b. To assess this industry as a customer or marketplace for energy-using equipment, and ultimately, for energy-reducing equipment.

The term "supermarket industry" is defined as the cumulative total of all retail outlets in the country dealing in the sale of food, food-related and accompanying items, and the associated organizational structures, distribution systems, equipment suppliers, and support organizations necessary to retail food sales. There are six major store types or classifications:

a. Superette

b. Convenience store

c. Supermarket

d. Super store

e. Warehouse store

f. Box store.

Their relative numbers and energy consumption are tabulated in Table ES-1.

The store types may be classified into three store organizations:

a. Independent

b. Chain

c. Convenience.

Chain operations comprise 47 percent of the supermarket business with 12 percent of the stores. Independents comprise 48 percent of the supermarket business with 71 percent of the stores. While viability of a new product must be proven to the chains for efficient market penetration, the independents must not be ignored, since they control nearly half the business volume and over two-thirds of the stores.

The typical average supermarket utilizes approximately 200 hp of refrigeration compressors, requires approximately 50 tons of air conditioning, and uses additional power for lighting, display case defrosting, and miscellaneous functions. The approximate energy usage mix in a supermarket is shown in Table ES-2.

TABLE ES-1. - Energy consumption by store type (2,3,4)

Store Type	Number of Stores	Total Stores (%)	Storewide Annual Energy Consumption (kWh)	Total Annual Energy Consumption (Billions of kWh)	Total Annual Energy (%)
Supermarket	22,020	12.5	2,060,000	45.36	51.5
Super Store	6,500	3.7	2,000,000	18.20	20.7
Superette	112,700	64.1	118,600	13.40	15.1
Convenience Store	30,000	17.1	200,000	6.01	6.8
Warehouse Store	2,650	1.5	1,606,000	4.25	5.1
Box Store	1,950	1.1	400,000	0.78	0.8
Totals	175,820	100		88	100

TABLE ES-2. - Approximate supermarket energy usage

Energy System	Annual Energy Consumption (kWhr)	Total Energy Usage (%)
Refrigeration system	1,110,000	54
Lighting	520,000	25
Space Conditioning	350,000	17
Miscellaneous	80,000	4
Total	2,060,000	100

The display cases serve to exhibit the product and supply stock from which the consumer can stop and shop. The meat, frozen food and dairy cases comprise over 60 percent of the total cases. Refrigeration systems are the compressor/condenser units which supply refrigerant to the display cases. Approximately 10 percent of the refrigeration systems in the supermarket industry are new energy-efficient parallel compressor systems; hence, there is a tremendous market for new energy-efficient equipment.

A detailed analysis of the supermarket refrigeration systems by means of a computer simulation program was undertaken. As shown in Figure ES-1, the various energy systems in a supermarket are interrelated and it is the refrigeration system which consumes 50 to 60 percent of the total energy. As a result, the analysis was directed at the refrigeration system. The computer simulation program was used to determine the sensitivity of various changes and improvements in the refrigeration systems to the overall efficiency of the operation.

The next step in the study was the investigation of energy-saving concepts and components which, according to the results of the sensitivity analysis, may significantly reduce energy consumption in a supermarket. The seven energy systems/components analyzed in detail are:

a. Unequal multicompressor parallel system

b. Evaporative condenser

c. Liquid suction heat exchanger

d. Finer pressure controls

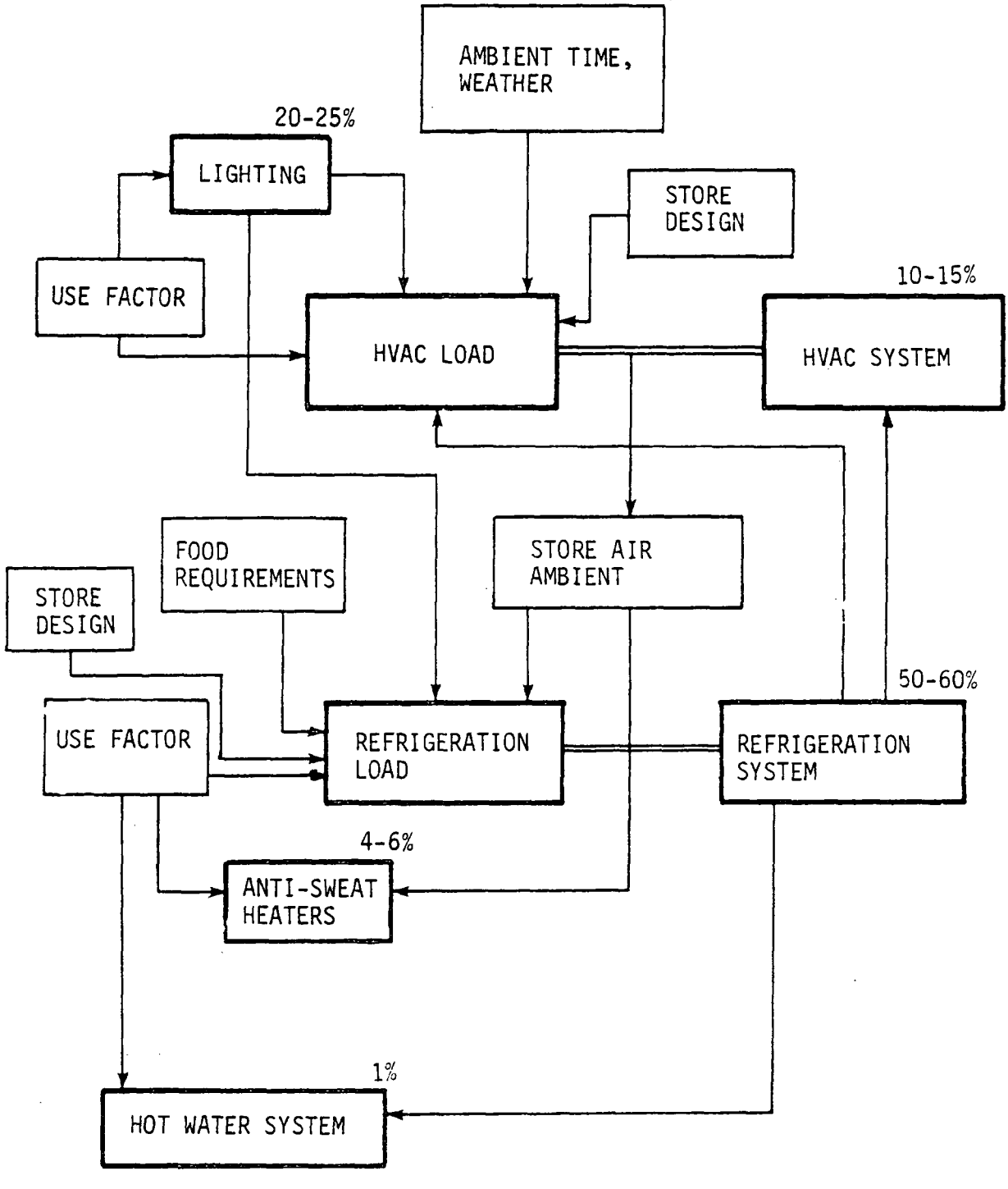

FIGURE ES-1. - Energy relationships among various supermarket systems.

e. Floating head-pressure system

f. Case redesign for 15 percent load reduction

g. Improved compressor design.

A method of evaluation of the different concepts was developed. Its purpose was to enable ranking of the concepts in order of desirability for development and commercialization. Eleven evaluation criteria, divided into three major categories of government, manufacturer, and customer, were established, and relative weights were assigned to each criterion. The criteria ranged from potential national energy savings to technical feasibility to operating costs.

Each component was evaluated for each criterion and a weight-adjusted total score was derived. The total scores are guidelines and served as a relative comparison of the different components investigated.

The sensitivity analysis revealed that several improvements in the energy efficiency ratio (EER) are possible:

a. 100 percent improvement in EER is possible by reducing the condensing temperature.

b. 70 percent improvement in EER is possible by allowing liquid subcooling.

c. 10 percent improvement in EER is possible by reducing suction pressure drop and employing an accurate control system.

d. 10 to 20 percent improvement in EER is possible by increasing the compressor overall efficiency.

e. 10 to 15 percent improvement in EER is possible by employing capacity control.

These possible *theoretical* improvements in EER are not additive and also may not be compatible with each other.

The primary conclusion from the Task 1 study was that unequal, parallel compressor systems, followed closely by a floating head-pressure control system, hold the best potential for substantial short-term energy conservation in the supermarket industry. The latter is of additional interest since the market study shows that a significant portion of the market for these systems exists in the cooler climates of the northern states. This study has also pointed out other energy-saving concepts that are being developed, or that will be developed in the future. Among the ones considered most promising, although not necessarily in the short term, are an improvement of display case design to reduce refrigeration load, and improvement of compressors to increase efficiencies.

It was proposed that Phase II involve the design and testing of an unequal, multiple, compressor parallel system, which can be applied to large and small, high, medium, and low temperature units. This unit shall be designed to take advantage of the possibility of allowing the condenser pressure to float with ambient conditions, taking advantage of the large gains in efficiency possible under cool ambient temperatures. Furthermore, it was also proposed that an electronic control system be developed. Improved electronic pressure control is a necessity to take full and proper advantage of an unequal, compressor system. Thus, Phase II will include design and testing of a fully integrated, unequal, parallel compressor system, with floating head-pressure capability, controlled by a microprocessor-based electronic control system.

In addition, it was proposed to model a display case in order to analyze new designs. Several concepts, such as radiation shields and double-door merchandisers, were investigated for energy savings. Recommendations for the most promising designs were given along with their predicted energy saving potential.

3. SYSTEM DESIGN AND TEST PLAN

After the completion of the system and market analysis, a system design was initiated for a supermarket refrigeration system which consists of:

a. Several compressors of differing capacities in parallel between common suction and discharge headers

b. A condenser/receiver subsystem that can take advantage of low ambient temperatures

c. A microprocessor-based control system to optimize the system operation.

Detailed analyses were performed to describe the optimum combination of compressors in an unequal, parallel arrangement. First, a system size of 35 hp was selected, which is a typical size for supermarket refrigeration compressor racks. A computer analysis was employed to generate the optimum combinations of two through six compressors and the distribution of capacities among the compressors in the system. The optimization is based on the minimization of suction pressure bandwidth. For the case of the unequal, parallel compressor system, the ability of the capacity control of the system to match the refrigeration capacity to the refrigeration load helps to narrow the suction pressure bandwidth over which the system operates. As the refrigeration load, and therefore the suction pressure, changes, the compressor sequence will be adjusted so that the capacity of the system will be the same or slightly greater than the required refrigeration load.

Second, an energy consumption model for unequal, parallel compressor systems was developed. The model consists of two different refrigeration load profiles: constant refrigeration load experienced by the refrigeration system and a bell shaped refrigeration load profile dependent upon ambient temperature. It was discovered that ambient temperature variation is the major contributor to the annual change in refrigeration load within a supermarket. For the constant refrigeration load profile case, the refrigeration load was held at the design condition value. Also included in the model was floating head pressure control. Annual energy consumptions for systems operating with R-12 at an evaporator temperature of 20°F and with R-502 at an evaporator temperature of -20°F were considered. For purposes of comparison, a base case was also examined which consists of three equal capacity parallel compressors whose combined capacity is also 35 hp. It was assumed that the base case has floating head pressure control, which is not the case for typical conventional supermarket refrigeration systems. The results of this annual

energy consumption analysis are presented in Table ES-3. For both load profiles and refrigerants, the results are similar: the unequal, parallel systems consume less energy than the equal parallel system for systems of three or more compressors.

Third, an economic analysis was performed to determine which unequal, parallel compressor arrangement for a supermarket refrigeration system will yield the largest life cycle savings and corresponding shortest payback period. The sensitivity of the economic analysis results to variances in energy cost escalation rates and discount rates were also investigated. The life cycle savings is defined as the difference in life cycle costs between the base case system and the unequal parallel compressor system being considered. The life cycle cost consisted of the initial capital cost, operating cost, and salvage value all discounted for escalation and cost of capital rates. The initial system cost, life cycle savings, and payback period for each of the unequal parallel compressor systems considered in the analysis are presented in Table ES-4. The payback period is the time period required for the life cycle savings to be equal to the difference in the initial cost between the system being considered and the base case system.

The economic analysis showed that for both R-12 and R-502 refrigerants, the greatest life cycle savings are obtained with an unequal, parallel compressor system employing three compressors with a 1:2:4 size or capacity ratio. This ratio for a 35 hp system equates to a rack with 5 hp, 10 hp, and 20 hp compressors.

Included in the economic analysis was the investigation of the impact of the cost for a microprocessor-based electronic control system on the total system cost. The results showed that for a payback period of three years or less (a reasonable payback period for the supermarket industry) an added controls cost between $500 to $1500 is acceptable.

The last analysis performed was the comparison of the three unequal, parallel compressor systems *with* floating head pressure control to a conventional supermarket refrigeration system *without* floating head pressure control. For the two refrigeration load profiles, the annual electrical energy consumptions are presented in Table ES-5. Compared to the conventional supermarket refrigeration systems, the three unequal, parallel compressor systems with R-12 will demonstrate a maximum annual energy savings of 29,100 kWhr or 26 percent and with R-502 will demonstrate a maximum annual energy savings of 20,100 kWhr or 15 percent.

TABLE ES-3. - Annual energy consumption analysis for the unequal parallel compressor supermarket refrigeration system

Number of Compressors	Annual energy consumption (10^3 kW-hr)			
	Variable refrigeration load profile		Constant refrigeration load profile	
	R-12	R-502	R-12	R-502
3 equal (base case)	96.2	90.6	123.2	121.0
2	98.1	93.4	122.1	122.4
3	83.8	86.7	112.6	114.2
4	82.8	85.4	108.2	112.3
5	81.0	84.0	104.2	111.6
6	79.5	83.9	103.6	110.8

For R-12 systems - Evaporator temperature = $20^{\circ}F$
Minimum condenser temperature = $65^{\circ}F$
For R-502 systems - Evaporator temperature = $-20^{\circ}F$
Minimum condenser temperature = $40^{\circ}F$

TABLE ES-4. - Life cycle savings analysis of unequal parallel compressor refrigeration systems

Number of compressors	Initial system cost ($)	Variable refrigeration load profile				Constant refrigeration load profile			
		Life cycle savings ($)		Payback (years)		Life cycle savings ($)		Payback (years)	
		R-12	R-502	R-12	R-502	R-12	R-502	R-12	R-502
3 equal (base case)	12,200	-	-	-	-	-	-	-	-
2	10,700	250	(361)	N/A	N/A	2,199	575	N/A	N/A
3	12,200	8,114	2,567	0	0	6,945	4,477	0	0
4	13,500	7,400	2,056	2	5	8,436	4,343	1	3
5	14,800	7,320	1,707	3	8	9,788	3,552	3	6
6	16,100	6,990	1,232	5	10	8,872	2,765	4	8

Assumptions for analysis:

a. System useful life = 15 years

b. Initial electrical energy cost = $0.05/kW-hr

c. Annual electrical energy cost escalation rate = 0.08

d. Discount rate = 0.10

TABLE ES-5. - Annual electrical energy consumption comparison of three unequal parallel compressor and conventional supermarket refrigeration systems

System description	Annual electrical energy consumption (10^3 kW-hr)			
	Variable refrigeration load profile		Constant refrigeration load profile	
	R-12	R-502	R-12	R-502
Three unequal parallel compressors floating head pressure*	83.8	86.7	112.6	114.2
Three equal parallel compressors minimum condenser temperature = 90°F	112.9	99.9	148.0	134.3
	Percent annual energy savings			
	25.8	13.2	23.9	15.0

*For R-12 systems, minimum condenser temperature = 65°F
For R-502 systems, minimum condenser temperature = 40°F.

Various schemes for controlling the condenser pressure, or head pressure, were considered. It was decided that the end product design could best be served by a detailed experimental evaluation of two alternate schemes. Both the Seasonmiser® system, marketed by McQuay Perfex, Inc., and the ambient subcooling system utilized by several supermarket refrigeration equipment manufacturers were designed into the test system.

A compressor capacity control algorithm was designed to select the optimum compressor combination for each operating condition by monitoring the variation in suction pressure and making appropriate changes which matched compressor capacity to refrigeration load. In addition, the algorithm keeps track of compressor off-time to ensure that short cycling of compressors does not occur, and that the compressors can respond to special conditions, such as defrost periods. With the algorithm, the three unequal, parallel compressor systems can operate in eight different modes or capacity states.

A microprocessor system based on an Intel 8085 microprocessor and Pro-Log Corporation components was selected for system control and data acquisition. The control system was more than adequate to accommodate large amounts of data generated during this test phase, can be modularily reduced to a simple compressor pressure control for end product use, or can be expanded to control other parameters in the refrigeration system, such as defrost, heat reclaim, and monitor and alarm functions.

The components described above have been designed and integrated into a complete test system, The test system is composed of two subsystems: the refrigeration system, including compressor rack, condenser, and microprocessor controller; and the refrigeration load model, which includes a display case, a walk-in cooler, and two brine chillers. The elements of the experimental refrigeration system are depicted schematically in Figure ES-2 and the refrigeration load model is depicted in Figure ES-3. The test system can be operated either in a fixed or floating head pressure mode, and includes heat reclaim and hot gas defrost, thus effectively simulating a supermarket application. The refrigeration load can simulate applications from small, short-term load variations, to larger variations over long time periods.

The test system is completely instrumented to allow characterization of system performance, as well as performance of individual components. Both refrigeration loads and compressor power consumption can be carefully monitored so that energy efficiency ratios (EERs) can be determined. At the same time, pressures and temperatures can be constantly measured as various points on the system to provide system monitoring capability.

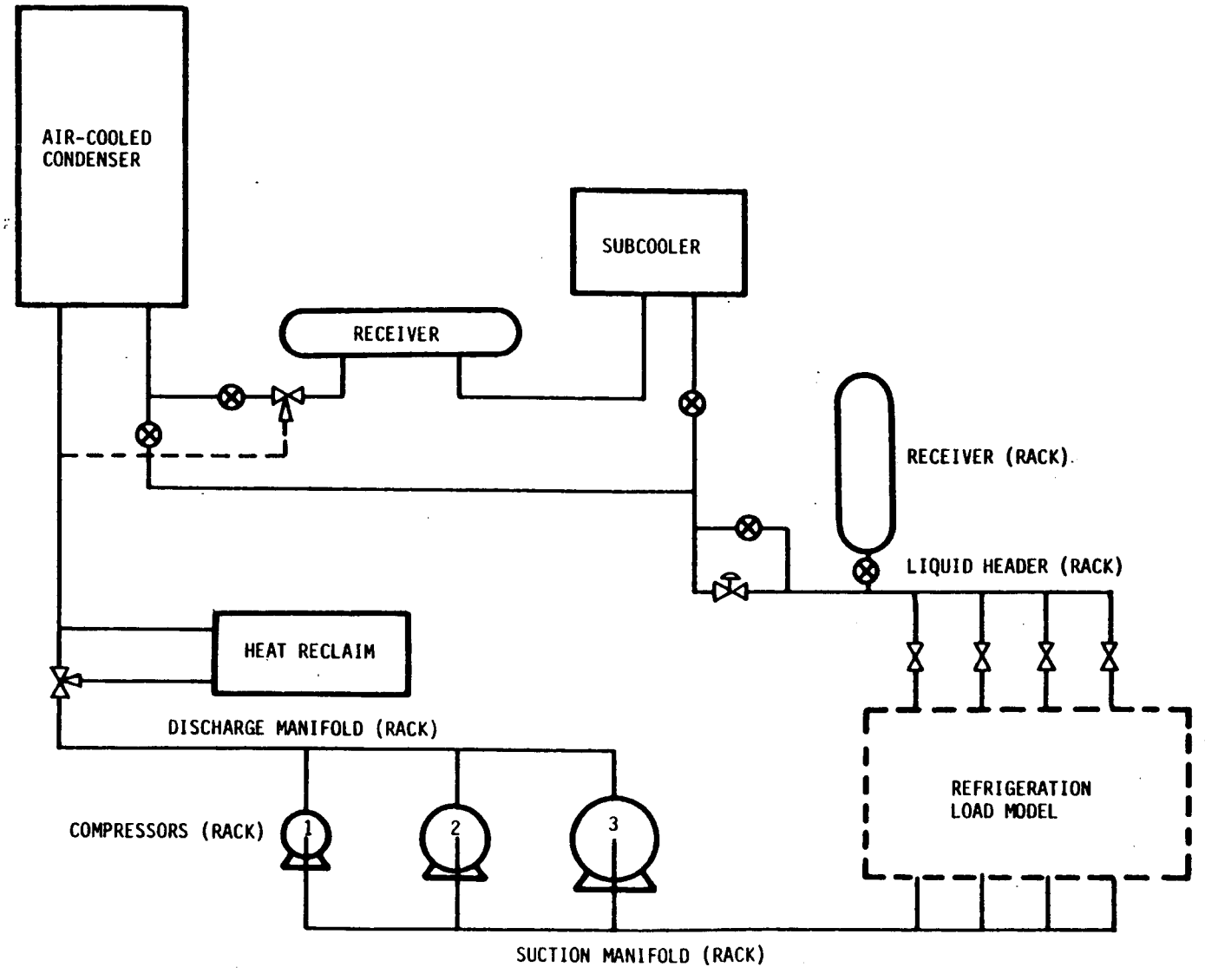

FIGURE ES-2. - Elements of the experimental supermarket refrigeration system.

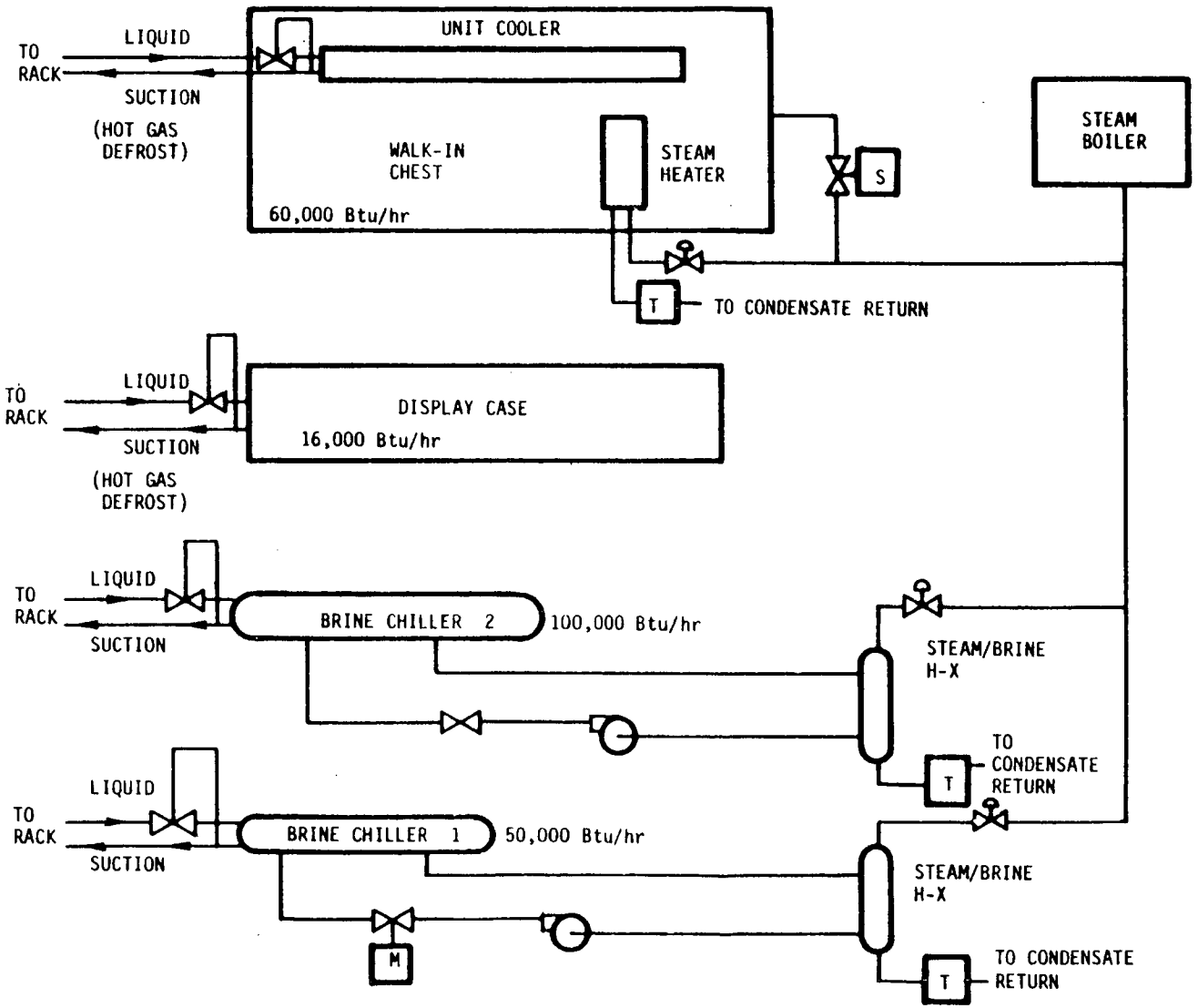

FIGURE ES-3. - Refrigeration load model.

The majority of instruments are electronic, and measurements can automatically be recorded at regular intervals via the microprocessor data acquisition system. Analog measurements from various instruments are connected to analog-to-digital converter (A/D) modules at this microprocessor. The digital data is then transmitted from the microprocessor and recorded on magnetic tape for temporary storage and data reduction.

Development of the test program played an important role in the final design of the test system. Major goals of the test program were:

a. Test unequal, parallel compressor system

b. Optimize capacity control algorithm

c. Evaluate floating head pressure system

d. Monitor expansion valve operation

e. Monitor system oil flow

f. Obtain general supermarket operating data.

4. DISPLAY CASE ANALYSIS AND DESIGN STUDY

Supermarket energy consumption is directly related to the design and utilization of refrigerated display cases. Yet, display case design still seems to be more an art than a science, influenced by merchandisers, store managers, and designers rather than engineers. Technical literature regarding display case design and performance is nonexistent.

The objective of this study was to examine the display case as an energy system and to identify the major heat loads and characterize their variation with different case designs and ambient conditions. Once the major heat loads were described, design improvements were suggested to improve the overall performance of the display case.

The characterization of display case heat loads were addressed by the development of a computer model of a display case. The computer model consists of a collection of individual subroutines which analyze the various display case subsystems. For example, separate routines were written to model a composite wall, evaporator, liquid-suction heat exchanger, air curtain, opening door, etc. The proper combination of routines could then be put together to model any type of display case, that is, tub, glass door reach-in, and multi-deck. The model uses first and second laws of thermodynamics and performs energy balances on the display case and on its various subsystems to determine display case performance. An example of the control volumes, heat fluxes, location of temperatures, and relevant mass flows of air and refrigerant for a tub-type display case is illustrated in Figure ES-4.

The computer model was validated with experimental data of a 12-ft tub-type display case which was installed and instrumented at the Friedrich Testing Laboratory in San Antonio, TX. Results from the laboratory measurements and computer calculations are compared in Table ES-6. The calculated temperatures, refrigerant flow rates, and heat transfer fluxes are in very close agreement with the respective measured values. For example, calculated total case heat gain and refrigerant flow rate are within 3 percent and 5 percent of the measured values, respectively. Overall, the computer model appears to be a fairly accurate model of a display case.

A parametric sensitivity analysis was performed to determine the effects of air flow rate, food product temperature, radiation, mixing and moisture entrainment, wall conduction, and store temperature on the tub-type display case performance. The results of the sensitivity analysis revealed that:

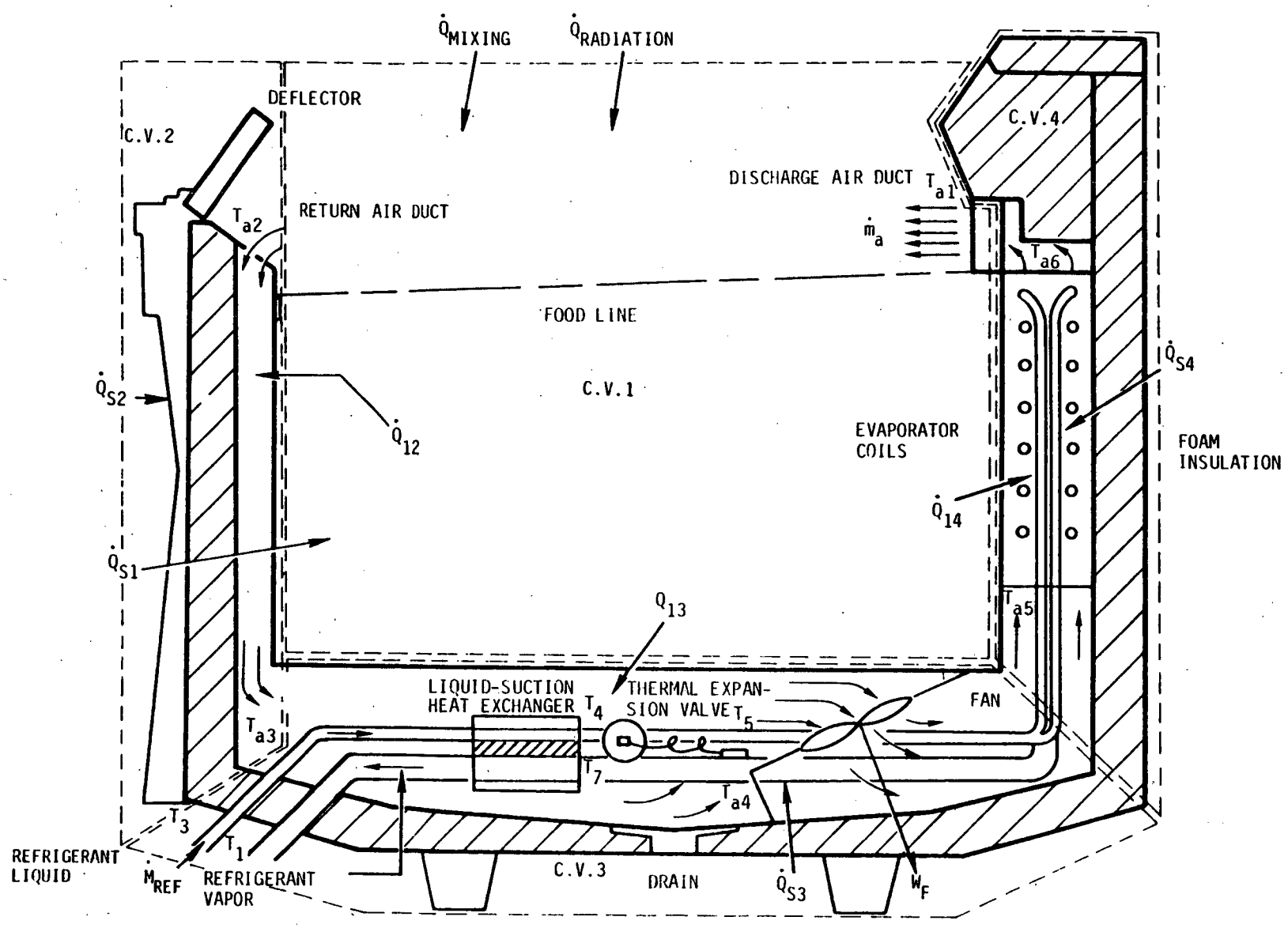

FIGURE ES-4. - Energy balance of tub display case: control volume analysis.

TABLE ES-6. - Model verification (Refrigerant 502)

Variable	Laboratory measured value	Computer calculated value
Wall surface temperatures (°F): Front, side, rear, bottom	66, 72, 66, 65	68, 71, 68, 62
Refrigerant temperature (°F):		
Heat exchanger outlet, liquid	36.0	32.0
Heat exchanger outlet, vapor	30.0	36.0
Case conduction heat gain (Btu/hr)	720.0	673.0
Total case heat gain (Btu/hr)	3857.0	3743.0
Evaporator load (Btu/hr)	4085.0	4235.0
Refrigerant flow rate (lbm/hr)	74.1	70.7
Refrigerant superheat in evaporator (°F)	14.0	26.0

a. Radiation heat gain accounts for nearly half the refrigeration load

b. Total case heat gain increases 25 percent for a 100 percent increase in air flow and increases 12 percent for a 10°F increase in store temperature

c. Mixing and moisture entrainment heat gains are approximately linear with air flow rate

d. The conduction heat gain increases 20 percent for a 100 percent increase in air flow

e. Surface radiation represents 15 percent of wall conduction heat gain.

Results of the parametric sensitivity analysis were then used as a basis for display case design improvements and new design concepts. The near-term design improvements include:

a. Improved air flow distribution

b. Employment of liquid suction heat exchangers

c. More efficient for motors

d. Replacement of electric defrost and installment of demand defrost

e. Utilization of new evaporation controls.

It is expected that individual savings as high as 5 percent could be achieved with some of these recommendations.

The new design concepts proposed include:

a. Radiation shields for tub-type display cases and multi-deck-type display cases

b. Double door reach-in merchandizer display case

c. Low air flow tub display case.

5. SYSTEM FABRICATION AND TEST RESULTS

As described in Section 3, the major elements of the experimental refrigeration test facility include:

a. A compressor rack containing three unequal parallel compressors and major control elements of the system

b. An air-cooled condenser equipped with a Seasonmiser® floating heat pressure control system

c. A microprocessor-based electronic control system capable of controlling the refrigeration compressors and acting as a data logger for data acquisition

d. A refrigeration load model designed to simulate the refrigeration loads of supermarket display cases.

A photograph of the experimental refrigeration system is shown in Figure ES-5 and a photograph of the unequal, parallel compressors mounted on the compressor rack is shown in Figure ES-6. A detailed photograph of the microprocessor-based electronic control system and data logger is shown in Figure ES-7.

The test plan major goals accomplished were:

a. Testing of the unequal, parallel compressor combination

b. Optimization of the capacity control algorithm parameters

c. Monitoring of oil flow in the system.

Testing of the floating head pressure system and heat reclaim system will be completed in a later portion of the project.

Tests were performed over a refrigeration load range of 78,000 to 160,000 Btu/hr. This range represents approximately 35 to 90 percent of the design refrigeration capacity of the system. The duration of each test was approximately 24 to 48 hr. During this time period, hot gas defrost cycles were performed each 24 hr on the display case and walk-in chest. Also, system instrumentation measurements were automatically taken at 1-min intervals.

Identical test conditions were used to test both the microprocessor-based electronic control system and the mechanical pressure control system.

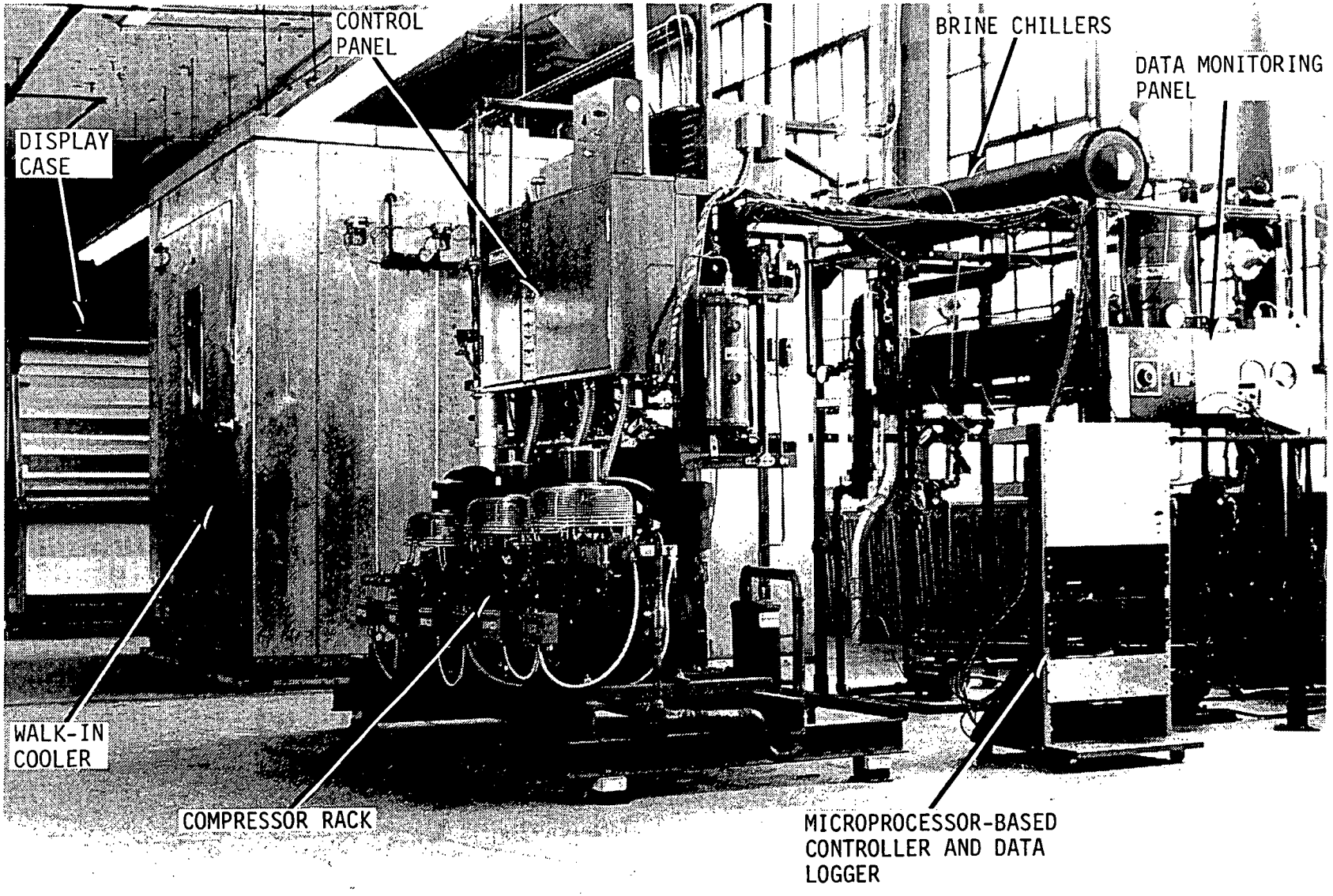

FIGURE ES-5. - Experimental refrigeration system.

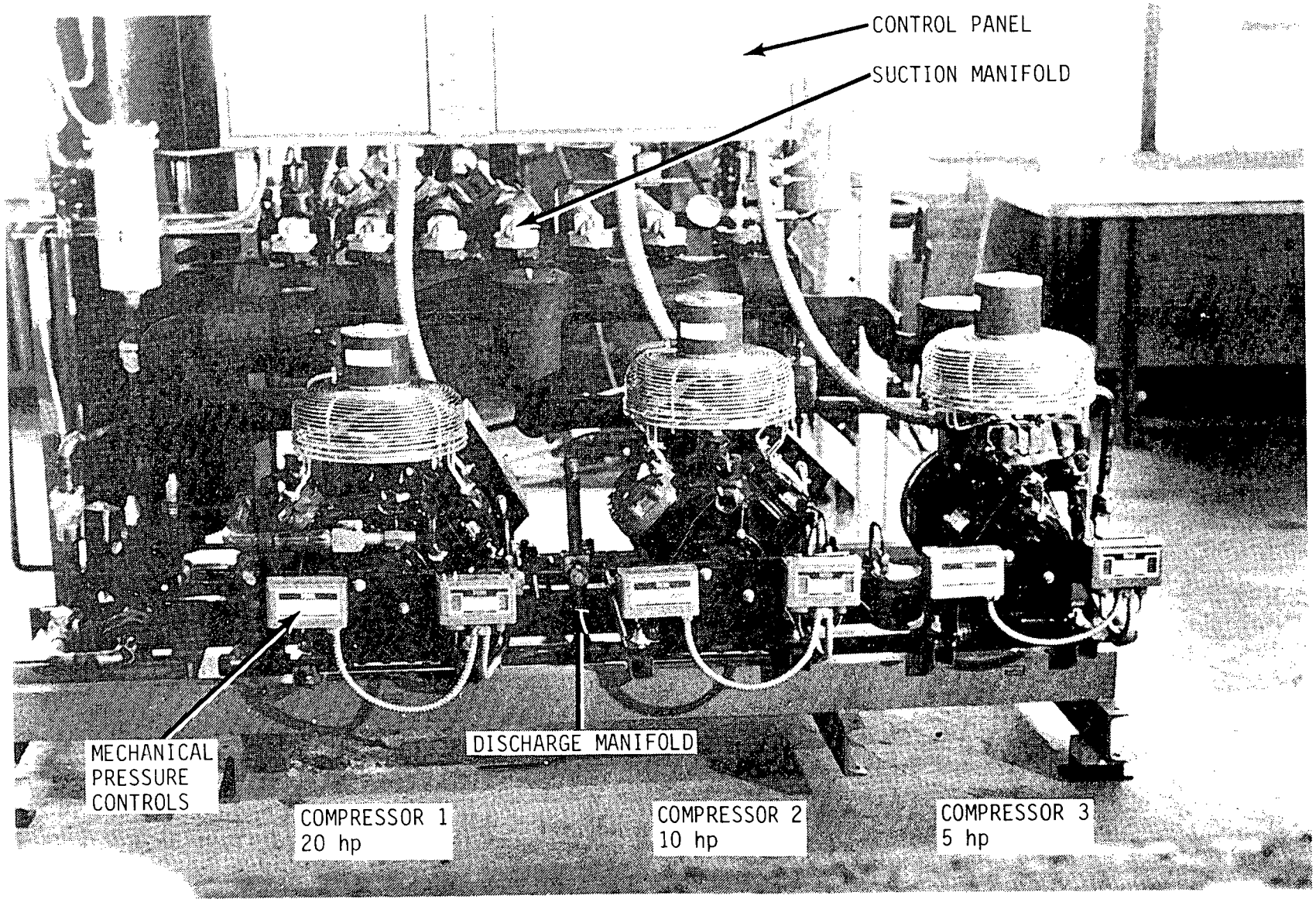

FIGURE ES-6. - The unequal parallel compressors mounted on the compressor rack.

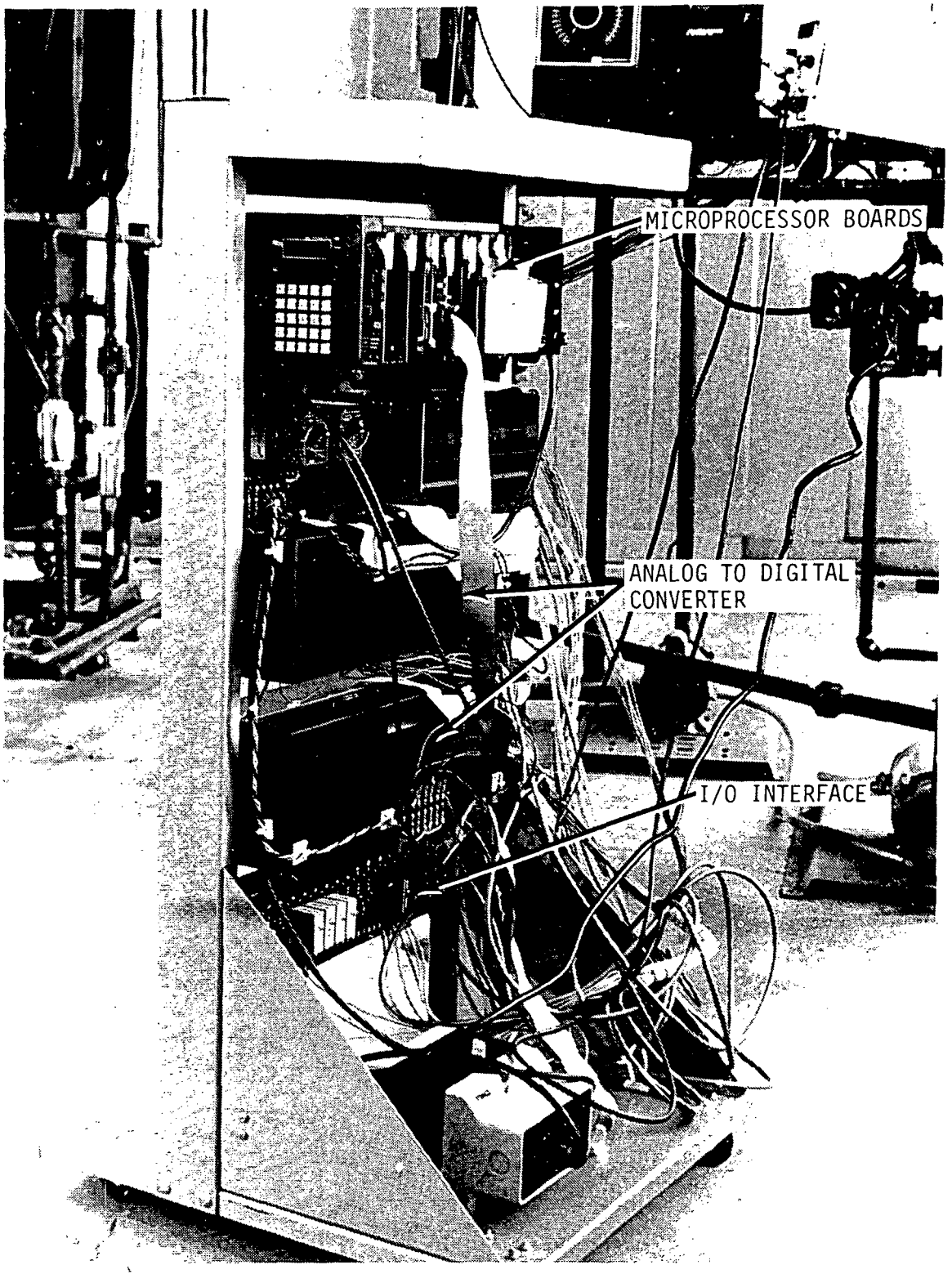

FIGURE ES-7. - Microprocessor-based controller and data logger.

After preliminary testing, cut-in and cut-out pressures for the microprocessor control algorithm were determined and are shown in Table ES-7. The mechanical pressure control settings for the unequal, parallel compressors are shown in Table ES-8.

The results of the control systems comparison tests are presented in Table ES-9. In these tests, the experimental refrigeration system was operated at three refrigeration load-levels between 78,000 and 160,000 Btu/hr.

a. The refrigerant used was R-12

b. The evaporator temperatures of the load models were maintained at approximately 20°F

c. The system was alternately controlled by the microprocessor-based electronic control system and the mechanical pressure control system.

The increase in EER for the microprocessor-based electronic control system as compared to the mechanical pressure control system ranged from 9.8 to 12.5 percent.

Other test results revealed that the oil system did not perform satisfactorily. The problem was that oil accumulated in the 5 hp compressor crankcase. This did not cause any lubrication problems; however, it will be addressed and corrected later in the project.

TABLE ES-7. - Pressure settings for the microprocessor-based electronic compressor control

Cut-in pressures (psig)	Cut-out pressures (psig)
CI(0) - 17	CO(0) - 12

TABLE ES-8. - Mechanical pressure control settings for the unequal parallel compressors

Compressor	Cut-in pressure (psig)	Cut-out pressure (psig)
20-hp compressor	18	5
10-hp compressor	22	7
5-hp compressor	20	9

TABLE ES-9. - Results of the comparison test between microprocessor-based electronic control and mechanical pressure control of the experimental refrigeration system

Run No.	Control type	Average refrigeration supplied (Btu/hr)	Average power consumed (kW)		Energy efficiency ratio (Btu/hr/W)		Percent improvement in energy efficiency ratio (%)		Ambient temperature range (°F)		Condensing pressure range (psig)		Average suction pressure (psig)
			Compressor	Total system	Compressor	Total system	Compressor	Total system	High	Low	High	Low	
007	Microprocessor	78,400	11.6	14.6	6.8	5.4	11.5	5.9	77	66	89	75	14.7
012	Mechanical pressure	82,400	13.4	16.2	6.1	5.1			75	70	90	84	13.7
003	Microprocessor	106,500	14.7	17.7	7.2	6.0	12.5	9.1	74	65	86	80	14.9
008	Mechanical pressure	120,800	18.9	21.8	6.4	5.5			75	69	91	87	14.0
005	Microprocessor	160,500	28.6	31.4	5.6	5.1	9.8	8.5	79	69	123	107	15.4
010	Mechanical pressure	155,000	30.4	33.0	5.1	4.7			78	68	124	110	14.8

Average evaporator pressure - 20 psig
Refrigerant - R-12

6. ENGINEERING EVALUATION TEST PLAN

The cumulation of Phases I and II efforts has resulted in the laboratory development of an unequal, multicompressor, parallel refrigeration system with a microprocessor-based electronic control system. However, for the new refrigeration system to be accepted by the supermarket industry, additional testing for performance validation and evaluation must be performed. The total supermarket energy system environment consisting of the HVAC, lighting, display cases, hot water, and refrigeration systems would be very difficult and expensive to simulate in a test laboratory; hence, engineering evaluation in a supermarket is a better method to establish credible performance data for the supermarket industry.

This section summarizes the methodology for supermarket evaluation test site selection, suggested major cities for engineering evaluation testing of the preproduction prototype system and the Phase III program plan.

Fourteen major supermarket chains with annual sales greater than $500M were solicited for participation in the engineering evaluation testing. To date five have responded positively, two negatively, and the remaining chains are still deliberating the proposal.

A semiquantitative method of determining the test sites for the engineering evaluation of the unequal, multicompressor, parallel system with microprocessor-based electronic control system was formulated. The country was divided into nine subregions and major cities were selected from each subregion for preliminary consideration. The evaluation criteria applied to each candidate city included energy cost, average annual ambient temperature, ambient temperature extremes, population and supermarket density, major city within any of the nine subregions of the United States, potential supermarket growth rate, supermarket chain company willingness to participate, geographical location of test site relative to Friedrich or FMA, institutional factors, and potential energy savings. Each city was assigned a score for each evaluation criterion and the total score, defined as the sum of the products of the individual evaluation criterion and their respective relative weight, was calculated for each city. The six cities selected are the following:

City	Region
Philadelphia, PA	Northeast
Boston, MA	Northeast
Dallas, TX	South
San Antonio, TX	South
Cleveland, OH	North Central
Los Angeles, CA	West

For Phase III it is recommended that preproduction prototype unequal, multicompressor, parallel systems be placed in both Boston and San Antonio. Should only one site be used, Boston is recommended.

Phase III, Preproduction Prototype System Development is divided into two tasks:

a. Task 5 - Engineering Evaluation

   1. Preproduction Prototype System Development
   2. Manufacturing Facility Development/Modifications
   3. Preproduction Prototype System Testing
   4. Deliverables 501, 52D, 503, and 5F

b. Task 6 - Phase III Final Report.

The purpose of Task 5 is to perform comprehensive engineering evaluation of the unequal parallel compressor system with the microprocessor-based electronic control system. This task includes both system design and testing. The purpose of Task 6 is to document all engineering and marketing efforts performed in Phase III.

7. CONCLUSIONS AND RECOMMENDATIONS

A market and system analysis was performed for supermarket refrigeration equipment. The results of the analysis revealed that unequal, parallel compressor systems with floating head pressure control offers the best potential for substantial short-term energy conservation in the supermarket industry.

A system consisting of:

a. Unequal, parallel compressors

b. Condenser with floating head pressure control

c. Microprocessor-based electronic control system

was analyzed and designed. The total system capacity is 35 hp and three compressors of 5, 10 and 20 hp capacity were determined to be the optimum number and capacity distribution. Compared to the conventional supermarket refrigeration systems, the three unequal, parallel compressor system with R-12 will demonstrate a maximum annual energy savings of 29,100 kWhr or 26 percent and with R-502 will demonstrate a maximum annual energy savings of 20,100 kWhr or 15 percent.

Further, economic analysis revealed that for a payback period of 3 years or less, an added controls cost between $500 to $1500 is acceptable.

A compressor capacity control algorithm was designed to select the optimum compressor combination for each operating condition to match compressor capacity to refrigeration load. A microprocessor system based on an Intel 8085 microprocessor and Pro-Log Corporation components was selected for system control and data acquisition.

The test system design includes two subsystems: the refrigeration system, including compressor rack, condenser, and microprocessor controller; and the refrigeration load model, which includes a display case, a walk-in cooler, and two brine chillers.

In parallel with the system design, a display case analysis and design study was performed. A display case computer model consisting of a collection of subroutines which analyze the various display case subsystems was developed. The computer model was validated with experimental data and the correlation of calculated temperatures, refrigerant flow rate, and heat transfer fluxes are in very close agreement with the respective measured values. A parametric sensitivity analysis was performed to determine the effects of the important thermodynamic parameters

on the tub-type display case performance. Important results of the analysis are:

a. Radiation heat gain accounts for nearly half the refrigeration load

b. Total case heat gain increases 25 percent for a 100 percent increase in airflow.

Near-term design improvements for display cases were prepared. Also, the following display case new design concepts were proposed:

a. Radiation shields for tub-type display cases and multideck-type display cases

b. Double door reach-in merchandizer display case

c. Low airflow tub-type display case.

The experimental refrigeration system was fabricated and testing was performed for the unequal, parallel compressor system over a refrigeration load range of 78,000 to 160,000 Btu/hr. For the tests, the refrigerant used was R-12, the evaporator temperatures were maintained at 20°F, and the system was alternately controlled by the microprocessor-based electronic control system and the mechanical pressure control system. The increase in EER for the microprocessor-based electronic control system as compared to the mechanical pressure control system ranged from 9.8 to 12.5 percent

An engineering evaluation test plan for Phase III was prepared. Boston and San Antonio were selected as the test sites for testing of the preproduction prototype unequal, multi-compressor parallel systems. Should only one site be used, Boston is recommended.

In addition to the engineering evaluation testing, it is also recommended that more basic research and development be performed for supermarket energy systems. Areas for basic research and development include:

a. Continued laboratory system testing

b. Expansion of the microprocessor-based electronic control system

c. Integration of the microprocessor control system with an existing store energy management system

d. Continued display case analysis and design

e. Development of an integrated supermarket energy system computer model.

All of these new research and development areas provide potential energy savings in the supermarket industry, and much of the proposed research is generic to other applications, such as walk-in coolers, commercial refrigeration systems, refrigerated central warehouses, and refrigerated trailers.

8. REFERENCES

1. Guide to Energy Conservation for Grocery Stores, Federal Energy Administration FEA/D-76/096, January, 1977.

2. Progressive Grocer Magazine, Progressive Grocer Marketing Guidebook, New York, 1979.

3. Chain Store Age Magazine, Chain Store Guide 1980: Directory of Supermarkets and Convenience Stores, New York 1980.

4. Personal communication from Jack Biggers, Marketing Department, Friedrich Air Conditioning and Refrigeration Company, San Antonio, TX, September, 1980.

APPENDIX A. STATEMENT OF WORK

Introduction

Grocery stores and supermarkets are a fertile area to develop energy saving devices. However, before singling out one or more units within the store for this development, it is necessary to study and understand the relations between the different systems in the store. In a typical supermarket, refrigeration will account for 40 to 60 percent of electricity consumption; environmental control will account for 15 to 20 percent; lighting 20 to 25 percent; and miscellaneous uses 5 to 10 percent. It is no wonder that energy management has become one of the most active programs throughout industry. In the face of this serious energy situation, examination of the patterns of energy use must be accomplished and ways looked for to conserve energy without sacrificing the appeal and efficiency of the stores. All supermarkets' energy-using systems are related both to one another and to the building structure, which means that an adjustment to one affects the other. This shall be a three-phased program designed to accomplish the following:

a. Review the overall energy requirements in grocery stores and supermarkets

b. Develop a thermodynamic computer program for analysis of supermarket energy utilization requirements and optimization

c. Develop a marketing strategy

d. Develop a prototype system

e. Evaluate a preproduct prototype system

f. Prepare a commercialization and marketing analysis.

Phase I: The objective of Phase I is to determine which system(s) in the supermarket offer the greatest potential for energy savings at a reasonable payback period of 5 years or less and to also develop a marketing strategy. In order to accomplish this objective, Foster-Miller Associates, Inc., will in Phase I complete the following task and subtasks.

Task 1. System Analysis

Develop a rank listing of the system improvements which could lead to a highly efficient new commercial product(s). A system is defined as the system(s) which maintains both comfort conditions within the building and conditions which insure preservation of the perishable commodities. The system functions include the 1) refrigeration, 2) heating, ventilating, and airconditioning (HVAC), and 3) humidity maintenance. This rank listing is to be developed by performing the following subtasks.

Subtask 1.A. Marketing and System Computer Program Development and Analysis: Develop a computer program which can be used to determine the technical and economic effects of system modifications and design improvements on the overall supermarket requirements. This subtask shall be accomplished in the following manner:

a. A computer program which models the refrigeration/display cases system, supermarket space conditioning system, supermarket cold storage system and other supermarket energy systems shall be prepared. Each of the systems, subsystems and components shall be characterized by thermodynamic and economic parameters.

b. A thermodynamic parametric/sensitivity analysis shall be performed to determine the effect of any improvements on the overall system thermodynamic performance and associated life cycle costs. For example, the analysis may show that an improvement of the refrigerant compressors isentropic efficiency may not be as cost effective as a 4 percent improvement of the condensers and evaporators heat exchanger effectiveness.

c. All supermarket energy systems shall be examined. For example, systems integration such as the combining of space conditioning and food preservation systems shall be investigated.

Subtask 1.B. The Marketing Analysis: The marketing analysis shall include the following:

a. A description of the market mix, that is, a description of the product, the price of the product, the promotion required for the successful introduction and continued selling of the product, and the place where the product shall be sold.

b. A manufacturing assessment shall be performed. includes the manufacturing costs both fixed and variable costs for different values of quantities produced.

c. A breakeven analysis shall be performed. The breakeven analysis shall indicate the profits or losses that occur for a certain quantity sold.

d. A projection of possible present and future sales and potential market for the proposed supermarket system shall be conducted.

e. The potential cost savings for the store owner shall be calculated. This analysis shall be performed in two ways. A net present value savings shall be calculated using an effective cost of capital and an expected payback period shall be calculated. Both the initial capital cost and operating costs shall be included in the analysis.

f. A description of the market penetration strategy and an estimate of the product life cycle curve, that is, sales versus time shall be prepared.

g. A prediction of the feasibility/applicability of the proposed supermarket system for the new, replacement, and retrofit markets shall be determined. Both technical and economical considerations shall be included in the evaluation.

h. A manufacturing investment analysis shall be performed. Information such as tooling costs, facilities costs, distribution and merchandizing costs, cost of capital, return on investment, and labor development costs shall be calculated.

Other factors such as the effect of different selling prices, product size, manufacturing capital investment and material requirements, environmental effects, safety and reliability characteristic shall be investigated.

Subtask 1.C. Rank and Rating: Utilizing the results of subtasks 1.A. and 1.B., formulate and apply a rating method for evaluating the best supermarket energy savings systems for development and demonstration. The rating criteria will include:

a. Technical feasibility

b. Technical risk

c. Energy savings potential

d. Initial capital cost

e. Time schedule for energy savings

f. Net present value of savings

g. Ease of commercialization

h. Reliability and maintainability

i. Consumer acceptance

j. Institutional factors.

The technical feasibility includes factors such as mechanical design, projected thermodynamic performance characteristics, manufacturing feasibility, utilization of state-of-the-art components or advanced components, etc. The energy savings potential is equal to the product of the estimated market size or yearly sales of the highly efficient system and the energy cost of the conventional system minus energy cost of the highly efficient system. The net present value of savings is the net present value of the energy savings as compared to a conventional system minus the initial difference in investment for the highly efficient system. Ease of commercialization includes such factors as manufacturing feasibility assessment, projected system price, market penetration evaluation and product life cycle estimate, initial venture, capital investment, size of distribution, sales, service system, and a number of potential commercial manufacturers. Consumer acceptance shall be evaluated on the basis of such factors as system noise, size, reliability, maintainability requirements, toxin emissions, system location for supermarket applications, system adaptability to existing systems and ease of operation. Institutional factors include federal and state laws, technical building codes and union regulations. A weighting value shall be assigned to each factor and the total rating score shall be the summation of the products of the rating factor values and the respective weighting values.

Phase II: The purpose of Phase II is to develop a highly efficient unequal parallel compressor system with microprocessor based electronic control system and floating head pressure system and a new energy efficient display case. All of these systems are suitable for rapid commercialization.

Task 2. Technical Development

FMA shall develop detailed specifications for the

a. Unequal parallel compressor system

b. Microprocessor based electronic control system

c. Floating head pressure system

and perform the work necessary to develop, fabricate, and test the prototypes which are optimized for the target market defined in Phase I, including design, fabrication, and use of an engineering model. Engineering evaluations shall be made of the trade-offs between performance of the unit and the associated cost differentials. These evaluations shall consider factors such as size, capacity of unit, noise, reliability, and modifications required to adapt the equipment to other portions of the potential market. The unit must have an overall service or seasonal efficiency significantly higher than those planned to be on the market in 1980 to 1985. The units shall be equivalent to or better than current models in service and convenience and shall be economically justified. The design and fabrication of the prototypes shall include current production considerations. Testing shall be performed under conditions which are realistic to the chosen target market. Testing procedures approved by the ORNL-TM shall be used.

Task 2 is divided into seven major subtasks which are described in detail:

a. System optimization

b. Unequal parallel compressor system design

c. Microprocessor based electronic control system design

d. Display case conceptual design and analysis

e. Prototype unequal parallel compressor system/electronic control system development

For Task 2 both FMA and Friedrich shall perform the System Optimization. In addition, Friedrich shall provide guidance for the successful completion of the system design and prototype development, and shall be responsible for the prototype display case system construction and testing. FMA shall be responsible for Task 2 and shall provide the leadership for its successful completion.

Subtask 2.A. System Optimization: A thermodynamic/economic optimization of the unequal compressor system with electronic control system and the display case system shall be performed. The computer program developed in Phase I, and updated in Phase II, shall be used to perform the system optimization. A thermodynamic sensitivity/parametric analysis shall be conducted to determine the effect of the subsystem components operating state points and efficiencies on the overall system coefficient of performance.

For each of the proposed system designs, a table of design and thermodynamic specifications and projected performances shall be prepared. The table shall include a summary of thermodynamic losses, component efficiencies, operating state points, process flow specifications and estimates of seasonal performance factors.

Subtask 2.B. Unequal Parallel Compressor System Design: From the results of Subtasks 1.C and 2.A, a highly efficient unequal parallel compressor system which is optimized for both low temperature and the medium temperature display case system shall be designed. A final thermodynamic, mechanical and cost analysis shall be performed. A table of mechanical design, thermodynamic and manufacturing specifications and estimated performances shall be prepared. The table shall include a summary of thermodynamic losses, component efficiencies, operating state points, system process specifications, estimates of seasonal performance factors for selected supermarket applications, manufacturing technology requirements and material specifications. Detail manufacturing drawings of the prototype system shall be prepared. The prototype unequal parallel compressor system detailed manufacturing drawings and specifications/performance table shall be reviewed with the ORNL-TM prior to fabrication of the prototype highly efficient unequal parallel compressor system.

Subtask 2.C. Microprocessor Based Electronic Control System Design: A microprocessor based electronic control system and the floating head pressure system which are compatible with the unequal parallel compressor system design prepared in Subtask 2.B shall be designed.

The steps in the successful design of an intelligent controller such as the microprocessor based electronic control system include:

a. Determination of functions to be monitored and controlled

b. Selection of control state points and ranges of variation for each state point

c. Design of computer software to perform the compressor system monitoring, controlling, and data acquisition

d. Selection and design of the computer hardware, e.g., the microprocessor, probes, interfacing between probe and microprocessor, printed circuit boards or proto-board, etc.

Of course, the software design shall occur in an evolutionary fashion, i.e., it shall be developed both initially during this subtask and during the prototype development in Subtask 2.E. An example would be the control algorithm which shall be modified both during design and testing of the compressor system.

Subtask 2.D. Display Case Conceptual Design and Analysis: A new highly efficient display case shall be designed. Prior to preparing conceptual designs, existing display cases, both open and closed, shall be modeled and programmed into a computer. The performance of the existing display case designs shall be predicted with the model and then compared with actual performance data provided by Friedrich. Once the computer program has been verified, then different conceptual designs shall be prepared and analyzed with the model. In conjunction with the engineering design/analysis effort, a marketing research effort devoted to the display case design and configuration shall be performed. The marketing research investigation shall include the determination of supermarket merchandizing requirements, consumer (supermarket shopper) preferences, new product acceptance criteria, etc.

Subtask 2.E. Prototype Unequal Parallel Compressor System with Electronic Controls Development: The purpose of this subtask is to fabricate and develop a prototype unequal parallel compressor system with both a microprocessor based electronic control system and an electronic floating head pressure system which are compliant with the design/thermodynamic specifications developed in Subtasks 2.A, 2.B, and 2.C.

The prototype unequal parallel compressor system shall be fabricated and installed in the FMA laboratory. The testing protocol, which includes the following:

a. Identification of the thermodynamic properties required to define the subsystem and system performances

b. Operating conditions over which the system is to be tested

c. Instrumentation required for property measurements

d. Sequence and type of tests to be performed

e. Data reduction protocol

shall be prepared. Instrumentation required for measurements of the thermodynamic state points and performance shall be installed on the prototype unequal parallel compressor system.

The compressor system shall be tested at the design point operating conditions and off-design point operation conditions, for example, various refrigeration capacities. The prototype testing shall be performed under conditions which simulate the chosen target markets and which are consistent with UL, AGA, or equivalent industry standards.

The computer program developed in Task 1, and updated during Phase II, shall be used to analyze the test results and to provide diagnosis in the event operating difficulties occur within certain components and subsystems of the compressor system. Performance data shall be based on testing and evaluation methods compatible with ASHRAE and ARI specifications. The empirical test results shall be entered into the Marketing/System Computer Program. The test results shall be prepared in graphical and tabular form and shall be reviewed with the ORNL-TM.

The development of the microprocessor based electronic control system shall include the software development and hardware development. Initially, both software and hardware shall be developed independently of each other. The software shall be placed on the FMA DEC PDP-1134 computer and the control and data acquisition will be transferred to the mainframe computer by means of an interprocess communications network. All the software shall be loaded in floppy disks so that it can be easily modified during development.

The hardware shall be the printed circuit boards and protoboards, probes, and interface equipment. Towards the end of the subtask the hardware and software shall be integrated with the compressor system and overall system testing shall be performed.

Task 3. Engineering Evaluation Test Plan

A detailed engineering evaluation test plan for engineering evaluation of the highly efficient system, including the plan for the pre-production of the units to be tested and evaluated, shall be prepared.

Subtask 3.A. Engineering Evaluation Test Plan Preparation: The engineering evaluation test plan shall summarize Task 5, Engineering Evaluation. All subtasks within Task 5 shall be described and estimates shall be made for time, personnel, and costs necessary for their completion. Important milestones and decision points shall be selected and their completion dates estimated. The engineering evaluation test plan shall be in sufficient detail to describe fully the technical approach to be accomplished.

The plan shall also include definitive commitments for Friedrich's participation in a substantive, cost sharing effort. Current projections may be required for one or more evaluation systems. These systems would meet the combined criteria of sufficient test location and reliability/performance sampling size. It is tentatively planned to install the evaluation system in supermarkets which currently employ Friedrich products.

An evaluation site location planning shall be performed. A technique for determining possible test locations for the engineering evaluation of the highly efficient system shall be developed. Major cities within the nine subregions of the United States shall be examined for potential site locations. Factors which shall influence the selection are:

a. Population

b. Geographical location

c. Electrical rates

d. Average seasonal ambient temperature

e. Potential supermarket growth.

The FMA and Friedrich key personnel shall meet and the program manager shall distribute the proposed Task 5 subtasks among them for planning. PERT charts, Gantt charts, person-hours, and materials shall be considered for each subtask, allowing for the interdependence and overlap of the tasks. Key personnel shall assemble the separate subtask plans and time/personnel/costs estimates into an overall Engineering Evaluation Test Plan.

HIGHLY ENERGY-EFFICIENT SUPERMARKET SYSTEMS

Task 1 Report

SYSTEM AND MARKET ANALYSIS

TABLE OF CONTENTS

System and Market Analysis

Section		Page
1.	INTRODUCTION AND SUMMARY	1-1
1.1	Introduction	1-1
1.2	Summary	1-1
1.3	Recommendations	1-4
2.	MARKET ANALYSIS - OVERALL VIEW OF THE SUPERMARKET INDUSTRY	1-6
2.1	Description of the Supermarket Industry	1-6
2.2	Customer (Store) Description	1-7
2.2.1	Store Types	1-7
2.2.2	Store Organization Types	1-9
2.2.3	Products Sold	1-10
2.2.4	Customer (Store) Objectives	1-10
2.2.5	Customer (Store) Equipment Buying Operations	1-11
2.3	Description of Store Energy-Using Equipment	1-12
2.3.1	Display Cases	1-12
2.3.2	Refrigeration Systems	1-14
2.3.3	Food Storage Systems	1-14
2.3.4	Heating, Ventilating and Air Conditioning Systems	1-16
2.3.5	Hot Water Systems	1-16
2.3.6	Energy Conserving Devices	1-16
2.4	Identification of Market Segments	1-17
2.4.1	Commercial	1-17

TABLE OF CONTENTS (Continued)

Section		Page
2.4.2	Geographic	1-17
2.4.3	Psychographic	1-18
2.5	Marketing and Sales of Store Refrigeration Equipment	1-19
2.5.1	Distribution Channels	1-19
2.5.2	Geographical Coverage	1-20
2.5.3	Sales Territories	1-20
2.5.4	Inventory Levels and Locations	1-20
2.5.5	Transportation	1-21
2.5.6	Promotion	1-21
2.5.7	Pricing Policies	1-22
2.6	Current Trends	1-23
3.	ANALYSIS OF SUPERMARKET ENERGY SYSTEMS	1-24
3.1	Energy Usage in a Typical Supermarket	1-24
3.1.1	Refrigeration System	1-25
3.1.2	HVAC System	1-28
3.1.3	Lighting	1-29
3.1.4	Case Anti-Sweat Heaters	1-29
3.1.5	Summary	1-29
3.2	Computer Model	1-30
3.2.1	Refrigeration Model	1-30
3.2.2	Program Assumptions	1-32
3.2.3	Program Structure	1-34

TABLE OF CONTENTS (Continued)

Section		Page
3.2.4	Program Capabilities	1-34
3.2.5	Program Verification	1-35
3.3	Sensitivity Analysis	1-35
3.3.1	Compressor Efficiency	1-36
3.3.2	Condensing Temperature	1-36
3.3.3	Subcooling	1-39
3.3.4	Suction Pressure	1-39
3.3.5	Superheat at Compressor Suction	1-43
3.3.6	Summary	1-43
3.4	Compressor Capacity Control	1-44
4.	ENERGY CONSERVATION SYSTEMS FOR SUPERMARKETS	1-47
4.1	Categories of Present Energy-Saving Concepts and Components	1-47
4.1.1	Refrigeration System Improvements	1-47
4.1.2	HVAC System Improvements	1-47
4.1.3	Controls	1-47
4.1.4	Add-on Energy-Saving Devices	1-48
4.2	Imminent Developments of Energy-Saving Concepts and Components	1-48
4.3	Future Energy-Saving Concepts	1-49
5.	RANK AND RATING OF ENERGY-SAVING COMPONENTS	1-51
5.1	Evaluation Criteria	1-51
5.2	Component Evaluation	1-51
5.2.1	Unequal Multicompressor Parallel System	1-54

TABLE OF CONTENTS (Continued)

Section		Page
5.2.2	Evaporative Condensers	1-54
5.2.3	Liquid Suction Heat Exchanger	1-54
5.2.4	Finer Pressure Controls	1-55
5.2.5	Floating Head-Pressure System	1-55
5.2.6	Display Case Redesign for 15 Percent Load Reduction	1-56
5.2.7	Improved Compressor Design	1-56
5.3	Summary	1-56
6.	CONCLUSIONS AND RECOMMENDATIONS	1-59
6.1	Conclusions	1-59
6.2	Recommendations	1-60
6.2.1	Proposed Phase II Work	1-60
6.2.2	Further Recommendations	1-60
7.	REFERENCES	1-62
	APPENDIX A - MODELING OF COMPRESSOR EFFICIENCIES	1-64
	APPENDIX B - COMPUTER MODEL FLOWCHARTS AND SAMPLE RUN	1-67

LIST OF ILLUSTRATIONS

Figure		Page
1.	Energy Relationships Among Various Supermarket Systems	1-26
2.	Schematic of a Typical Supermarket Refrigeration System	1-27
3.	Pressure Enthalpy Diagram Showing Computer Modeling of Refrigeration Cycle	1-31
4.	EER Ratio Versus Compressor Overall Efficiency	1-37
5.	EER Ratio Versus Condensing Temperature; No Subcooling	1-38
6.	EER Ratio Versus Subcooling; T_{cond} = 90°F	1-40
7.	EER Ratio Versus Subcooling; T_{cond} = 130°F	1-41
8.	EER Ratio Versus Suction Pressure Showing Average Suction Condition for Two Bandwidths	1-42
9.	EER Ratio Versus Superheat at Suction; T_{cond} = 90°F	1-44
A-1.	Curve Fit of Volumetric Efficiency Data	1-65
A-2.	Curve Fit of Overall Efficiency Data	1-66
B-1.	Flowchart for Main Program SUPMKT	1-68
B-2.	Flowchart for Subroutine MULTCOM	1-69
B-3.	Flowchart for Subroutine CONDNS	1-70
B-4.	Flowchart for Subroutine BASCYC	1-71
B-5.	Sample Program Output	1-75

LIST OF TABLES

Table		Page
1.	Approximate Supermarket Energy Usage	1-2
2.	Energy Consumption by Store Type	1-8
3.	Summary of Business Share by Store Organization	1-10
4.	Typical Supermarket Product Composition by Sales	1-11
5.	Display Case Distribution in the Supermarket Industry	1-13
6.	Distribution of Display Case Types in a Typical Supermarket	1-14
7.	Distribution of Refrigeration Systems in the Supermarket Industry	1-15
8.	Energy Consumption of Food Storage and Preparation Systems in a Typical Supermarket	1-15
9.	Supermarket Equipment Market Distribution	1-18
10.	Typical Store Annual Energy Usage	1-24
11.	Refrigerant Usage and Temperature Ranges for Typical Supermarket Refrigeration Applications	1-25
12.	Base Conditions for Sensitivity Analysis	1-36
13.	Summary of Sensitivity Study	1-45
14.	Evaluation Criteria and Corresponding Weights (Scale 1 - 10)	1-52
13.	Component Scores on Evaluation Criteria (Scale 1 - 5)	1-53
16.	Example: Total Score Computation for Evaluation of Case Redesign	1-57

LIST OF TABLES (Continued)

Table		Page
17.	Rank of Components by Total Score	1-58
B-1.	Program SUPMKT - Input Variables	1-72
B-2.	Input Variables for Sample Program Run	1-74

1. INTRODUCTION AND SUMMARY

1.1 Introduction

The supermarket industry, accounting for 4 percent of our annual national electrical consumption, offers a great potential for energy conservation (1). Although some of the energy conservation potential may be limited by merchandising and institutional constraints, the major area of energy savings lies in the improvement of the refrigeration systems that account for over half the total supermarket energy consumption. While much work has been done on lighting reduction and space conditioning systems in general, the design of supermarket refrigeration components and systems has not, until now, benefitted from an active research effort.

Foster-Miller Associates, Inc. (FMA), of Waltham, MA, the primary contractor on this program, has teamed with Friedrich Air Conditioning and Refrigeration Co. (Friedrich) of San Antonio, TX, to provide a broad base of technical, marketing, and manufacturing experience. FMA is responsible for the program management, computer model development, systems analysis, design, and supervision of testing. Friedrich provides support in marketing and manufacturing, and experience in refrigeration system design; they are also responsible for the implementation of the prototype testing project. To provide customer, that is, supermarket, input to this program, FMA has assembled a Supermarket Advisory Committee. This committee is composed of refrigeration and energy conservation experts for major supermarket chain organizations, such as Safeway, Stop and Shop, H.E. Butt, Star Market, and Giant Foods, as well as the Food Marketing Institute. The committee meets with representatives from FMA, Friedrich, and Oak Ridge National Laboratories (ORNL) at 6- to 9-month intervals.

This report is the product of the first phase of a research program undertaken by the Department of Energy (DOE) through ORNL in an attempt to investigate supermarket refrigeration systems. In this phase, the supermarket has been studied as an energy system, the supermarket industry has been studied as a market for energy-efficient refrigeration systems, and various energy-saving concepts have been analyzed.

1.2 Summary

A market assessment of the supermarket industry was performed. There are size major store types:

a. Superette

b. Convenience store

c. Supermarket

d. Super store

e. Warehouse store

f. Box store.

The store types may be classified into three store organizations:

a. Independent

b. Chain

c. Convenience.

Chain operations comprise 47 percent of the supermarket business with 12 percent of the stores. Independents comprise 48 percent of the supermarket business with 71 percent of the stores. While viability of a new product must be proven to the chains for efficient market penetration, the independents must not be ignored, since they control nearly half the business volume and over two-thirds of the stores.

The typical average supermarket utilizes approximately 200 hp of refrigeration compressors, requires approximately 50 tons of air conditioning, and uses additional power for lighting, display case defrosting, and miscellaneous functions. The approximate energy usage mix in a supermarket is shown in Table 1.

TABLE 1. - Approximate supermarket energy usage

Energy System	Annual Energy Consumption (kWhr)	Total Energy Usage (%)
Refrigeration system	1,110,000	54
Lighting	520,000	25
Space Conditioning	350,000	17
Miscellaneous	80,000	4
Total	2,060,000	100

The display cases serve to exhibit the product and supply stock from which the consumer can stop and shop. The meat, frozen food and dairy cases comprise over 60 percent of the total cases. Refrigeration systems are the compressor/condenser units which supply refrigerant to the display cases. Approximately 10 percent of the refrigeration systems in the supermarket industry are new energy-efficient parallel compressor systems; hence, there is a tremendous market for new energy-efficient equipment.

Like any industry entrenched in its ways, the supermarket industry has been slow in responding to new energy-saving equipment. Merchandizing practices have constrained new energy-efficiency improvements; retailers would still rather appropriate money for sales increases rather than to decrease operating costs. The commercial refrigeration manufacturers have slowly responded with many and varied small improvements in the energy efficiency of their products. There has been no real system integration of the various ideas. Furthermore, the manufacturers do not have the resources to develop a completely integrated system for market penetration in the near term. However, the industry is slowly demonstrating an awareness of the potential for reduced energy consumption in supermarkets.

A detailed analysis of the supermarket refrigeration systems by means of a computer simulation program was undertaken. The various energy systems are interrelated and it is the refrigeration system which consumes nearly 54 percent of the total energy. As a result, the analysis was directed at the refrigeration system. The computer simulation program was used to determine the sensitivity of various changes and improvements in the refrigeration systems to the overall efficiency of the operation.

The next step in the study was the investigation of energy-saving concepts and components which, according to the results of the sensitivity analysis, may significantly reduce energy consumption in a supermarket. The seven energy systems/components analyzed in detail are:

a. Unequal multicompressor parallel system

b. Evaporative condenser

c. Liquid suction heat exchanger

d. Finer pressure controls

e. Floating head-pressure system

f. Case redesign for 15 percent load reduction

g. Improved compressor design.

A method of evaluation of the different concepts was developed. Its purpose was to enable ranking of the concepts in order of desirability for development and commercialization.

Eleven evaluation criteria, divided into three major categories of government, manufacturer, and customer, were established, and relative weights were assigned to each criterion. The criteria ranged from potential national energy savings to technical feasibility to operating costs.

Each component was evaluated for each criterion and a weight-adjusted total score was derived. The total scores are guidelines and served as a relative comparison of the different components investigated.

The sensitivity analysis revealed that several improvements in the energy efficiency ratio (EER) are possible:

a. 100 percent improvement in EER is possible by reducing the condensing temperature.

b. 70 percent improvement in EER is possible by allowing liquid subcooling.

c. 10 percent improvement in EER is possible by reducing suction pressure drop and employing an accurate control system.

d. 10 to 20 percent improvement in EER is possible by increasing the compressor overall efficiency.

e. 10 to 15 percent improvement in EER is possible by employing capacity control.

These possible *theoretical* improvements in EER are not additive and also may not be compatible with each other.

The primary conclusion from the Phase I study is that unequal parallel compressor systems, followed closely by a floating head-pressure control system, hold the best potential for substantial short-term energy conservation in the supermarket industry. The latter is of additional interest since the market study shows that a significant portion of the market for these systems exists in the cooler climates of the northern states. This study has also pointed out other energy-saving concepts that are being developed, or that will be developed in the future. Among the ones considered most interesting, although not necessarily most promising in the short term, are an improvement of display case design to reduce refrigeration load, and improvement of compressors to increase efficiencies.

1.3 Recommendations

It is proposed that Phase II involve the design and testing of an unequal multiple compressor parallel system, which can be applied to large and small, high, medium, and low temperature

units. This unit shall be designed to take advantage of the possibility of allowing the condenser pressure to float with ambient conditions, taking advantage of the large gains in efficiency possible under cool ambient temperatures. Furthermore, it is also proposed that an electronic control system be developed. Improved electronic pressure control is a necessity to take full and proper advantage of an unequal compressor system. Thus, Phase II will include design and testing of a fully integrated, unequal parallel compressor system, with floating head-pressure capability, controlled by a microprocessor-based electronic control system.

In addition, we propose to analyze and model a display case in order to provide and test a new design. While the concept of display case redesign was ranked somewhat low in the evaluation procedure, this was due primarily to low scores in development time and design feasibility. FMA and Friedrich believe that their combined expertise can improve those numbers. With FMA capability in heat and mass transfer analysis and computer modeling, and Friedrich experience in case design and testing, and expertise in manufacturing, a program can accelerate the development of a more energy-efficient display case.

The Supermarket Advisory Committee members were briefed on the results and conclusions of this Phase I study. They have agreed that the systems and components for proposed design and testing in Phase II are needed and will be welcomed by the supermarket industry.

2. MARKET ANALYSIS - OVERALL VIEW OF THE SUPERMARKET INDUSTRY

The purpose of the market analysis is twofold:

a. To obtain a general description of the composition and behavior of the supermarket industry

b. To assess this industry as a customer or marketplace for energy-using equipment, and ultimately, for energy-reducing equipment. The following subsections describe the overall industry stores, their organization, the energy-using equipment they use, and the marketing and selling of this equipment.

2.1 Description of the Supermarket Industry

The term "supermarket industry", as used in this report, is defined here as the cumulative total of all retail outlets in the country dealing in the sale of food, food-related and accompanying items, and the associated organizational structures, distribution systems, equipment suppliers, and support organizations necessary to retail food sales. Since the real goal of this study is the retail outlet itself, large warehouse storage systems and food processing operations are not considered at this time.

The industry in 1978 consisted of approximately 175,800 stores (2), the majority of which were small. Store size and organization will be discussed in detail in subsection 2.2.

The majority of supermarket refrigeration equipment is supplied to the industry by five major manufacturers of commercial refrigeration products. A host of smaller manufacturers share specialty markets for equipment (such as coolers, controls, evaporator coils, etc.) which may or may not be provided by the large manufacturers. Total sales within the commercial refrigeration industry annually range between $275 and $350 million (3).

The space conditioning equipment is provided by heating, ventilating, and air conditioning (HVAC) manufacturers not particular to the supermarket industry.

There are several important trade organizations in this industry, all of which hold national conventions annually. The Food Marketing Institute (FMI) is by far the largest and most broadly-based organization of retailers and wholesalers. The FMI annual convention and exposition sets the pace for the industry. FMI also sponsors subcommittees on various subjects, such as energy, and publishes summaries on a wide variety of

topics, including annual polls of supermarket operations. The Cooperative Food Distributors of America (CFDA) consists of members of various co-ops nationwide. The National Association of Retail Grocers of the United States (NARGUS) attracts the independent grocer. The National Commercial Refrigeration Sales Organization (NCRSA) is primarily for commercial refrigeration distributors, with commercial refrigeration manufacturers qualified to be associate members only. The Commercial Refrigeration Manufacturers Association (CRMA) sets voluntary standards for the commercial refrigeration industry. Primary trade journals in the industry are the weekly Supermarket News, and the monthlies Progressive Grocer, Supermarket Business, and Chain Store Age.

2.2 Customer (Store) Description

2.2.1 Store Types

There are six major store types or classifications. Their relative numbers and energy consumption are tabulated in Table 2. A description of store types is as follows (2,4,5):

a. Supermarket - full-line self-service market in excess of 6,000 ft^2 and annual sales volume in excess of $1,000,000, comprising 12.5 percent of all stores

b. Super Store - full-line self-service market in excess of 25,000 ft^2 and annual sales volume in excess of $5,000,000, comprising 3.7 percent of all stores

c. Warehouse Store - limited assortment, self-service market with a warehouse atmosphere in excess of 10,000 ft^2 and annual sales volume in excess of $1,000,000, comprising 1.5 percent of all stores

d. Convenience Store - limited assortment of fast-moving products, less than 2,500 ft^2, comprising 17.1 percent of all stores

e. Superette - full-line self-service market less than 6,000 ft^2 and annual sales volume of less than $1,000,000, comprising 64.1 percent of all stores

f. Box Store - very limited assortment, usually no perishables, self-service market in excess of 4,000 ft^2 and annual sales in excess of $1,000,000, comprising 1.1 percent of all stores.

TABLE 2. - Energy consumption by store type (2,4,5)

Store Type	Number of Stores	Total Stores (%)	Storewide Annual Energy Consumption (kWh)	Total Annual Energy Consumption (Billions of kWh)	Total Annual Energy (%)
Supermarket	22,020	12.5	2,060,000	45.36	51.5
Super Store	6,500	3.7	2,000,000	18.20	20.7
Superette	112,700	64.1	118,600	13.40	15.1
Convenience Store	30,000	17.1	200,000	6.01	6.8
Warehouse Store	2,650	1.5	1,606,000	4.25	5.1
Box Store	1,950	1.1	400,000	0.78	0.8
Totals	175,820	100		88	100

2.2.2 Store Organization Types

The six store types can be divided into the following types of organizations (2,4,5):

a. Chain supermarkets - Stores operated by organizations operating 11 or more retail outlets that have annual sales in excess of $1,000,000 each. Of the total number of grocery stores in the nation, 10.5 percent are chain supermarkets doing 46 percent of the total grocery business in the nation.

b. Independent supermarkets - Stores operated by organizations operating 10 or less retail outlets that have annual sales in excess of $1,000,000 each. Of the total number of grocery stores in the nation, 8.3 percent are independent supermarkets doing 30 percent of the total grocery business.

c. Chain small stores - Stores with annual sales under $1,000,000 operated by a chain organization (11 or more outlets). This classification comprises 1.4 percent of total grocery stores and 1 percent of the total grocery business.

d. Independent small stores - Stores with annual sales under $1,000,000 operated by an independent owner. This classification comprises 62.7 percent of total grocery stores and 18 percent of the total grocery business.

e. Convenience stores - Stores with limited assortment and less than 2,500 ft^2. This classification comprises 17.1 percent of total grocery stores and 5 percent of total grocery business.

These statistics are summarized in Table 3 which indicates that chains, with only 12 percent of the stores, control nearly half the total business. It is evident that for efficient market penetration, the viability of any new product must be proven to the chain organizations. The independents, however, must not be ignored, since they also control nearly half the business, and, as described in subsection 2.2.5, often rely primarily on refrigeration equipment distributors.

It is assumed that energy consumption is proportional to business volume. Therefore, independents and chains consume approximately equal amounts of energy. While it could be argued that chains sell a greater volume of frozen foods than do independents, or that independent stores run more efficiently than chain stores, or vice versa, the differences are not documented, and are at best on the order of a few percent.

TABLE 3. - Summary of business share by store organization (2,4,5)

Organization type	Business share
Independents	71 percent of all stores 48 percent of total business
Chains	12 percent of total stores 47 percent of total business
Convenience	17 percent of total stores 5 percent of total business

2.2.3 Products Sold

Approximately half the business in a typical supermarket is sales of perishable food which must be refrigerated (6). Table 4 describes the breakdown of products sold in a typical supermarket. These numbers have remained fairly constant over the last several years, and can be assumed to remain so for several coming years as well. Although frozen food sales have increased during the last decade, there has been a levelling-off effect recently.

2.2.4 Customer (Store) Objectives

The following are the primary objectives of a store owner:

a. Make a profit in the operation of the business

b. Make the business appealing to consumers - clean, neat displays, good order, complete line of good quality merchandise

c. Make the business convenient to customers - good location, good shopping pattern, accessible product stocking

d. Make the business comfortable to customers - heated and air conditioned store, comfortable aisle temperature, noise-free environment

e. Maintain trouble-free operation - good equipment performance, customer and employee satisfaction.

These objectives provide the primary constraints for the design of more energy-efficient store equipment.

TABLE 4. - Typical supermarket product composition by sales (6)

Product Type	Breakdown (%)	Total Sales (%)
Perishable foods		51
- meat	22	
- produce	11	
- dairy	7	
- bakery	6	
- frozen foods, ice cream	<5	
- delicatessen	<1	
- ice	<1	
Nonperishable foods (dry grocery products)		39
- canned goods, staples, wine, beer, soft drinks, tobacco products, etc.		
Nonfood products (general merchandise)		10
- drugs, sundries, soaps, housewares, automotive, etc.		
Total		100

2.2.5 Customer (Store) Equipment Buying Operations

Procedures by which stores buy equipment vary widely, and often, energy efficiency ranks low on the list of criteria. The different buying methods can be condensed into three major classifications (7):

a. Large national chains - These are by far the most complete, most complex, and most sophisticated of buying operations. They involve the purchasing, engineering, merchandising, store design and construction, and energy (if existing) departments. All these departments are capable of influencing a decision regarding innovative ideas or products; the strongest department usually exerts the greatest influence.

The normal continuing or repetitive type of procurement is influenced most by engineering specifications where engineering approval is required before purchasing can place an order. Once specifications have been met, the purchasing department determines the supplier - usually by price or personality and service influence. Chains may work with one manufacturer or several, but usually, once they develop a pattern they tend to stick to it.

b. Wholesale and co-op grocery warehouses - The store planning department usually aligns itself with one, two, or three manufacturers and proceeds to satisfy the independent retailers' desires. Generally, the store planner's assistance is needed and requested, and the store planner exerts the greatest influence in selection of equipment. Where the independent owner has definite ideas on what the plans should be, they exert the dominant influence on all equipment selections. The order is generally placed through the wholesale grocery operation.

c. Independent operator - Generally these operators align themselves with one or more equipment distributor or dealer in whom they have confidence, and depend on them for guidance in selection of equipment. Occasionally, entrepreneur types will have definite ideas and knowledge of their own, and will make the major equipment decisions. The order is placed by the owner with the distributor or dealer who in turn places an order with the manufacturer.

2.3 Description of Store Energy-Using Equipment

Most equipment in a supermarket uses energy - from refrigerated cases to lighting to cash registers. For purposes of this report, the discussion will focus on the larger uses of energy, primarily the refrigeration and space conditioning systems.

2.3.1 Display Cases

Display cases serve to exhibit the product and supply stock from which the consumer can stop and shop. Table 5 presents the distribution of display cases by functional category in the supermarket industry, based on annual shipments (3). The meat, frozen food and dairy cases comprise over 60 percent of the total cases, and an even greater portion of the total case energy consumption because of their lower evaporator temperatures, and the fact that up to 40 percent of the produce cases (6 percent of total cases) are not refrigerated.

TABLE 5. - Display case distribution in the supermarket industry (3)

Display case function	Evaporator temperature level (°F)	Distribution (%)
Meat - self-service, service	15	23
Frozen food - self-service, door cases	-20 to -25	21
Dairy - self-service, door cases	15	18
Produce - refrigerated	20	10
not refrigerated		6
Ice cream - self-service, door cases	-35	6
Beverage - self-service, door cases	15	5
Delicatessen - self-service, service	20	5
Florist - self-service, door cases	35	2
Fresh bakery - self-service not refrigerated		2
Frozen bakery - self service	-25	2
Total		100

Table 6 shows types of cases by proportion of linear footage in a typical new supermarket in 1978 for the three main categories (8).* It should be noted that the open multi-deck cases under design conditions use two to three times the energy of the single-deck and closed door units. While these cases are kept to a minimum in the low temperature frozen food category, they account for a significant portion of the energy consumption in the dairy and meat categories. Open multi-deck cases are popular for merchandising reasons.

* Note: Data cited from FMI literature, references (8,10,14), are based on a sampling poll of FMI members. Since respondents to the poll do not always represent an accurate cross-section of the industry, these numbers cannot be compared directly with those of other references which may represent more complete industry coverage.

TABLE 6. - Distribution of display case types in a typical supermarket (8)

Category	Display case type	Proportion of total linear floor footage per category (%)
Meat	Single-deck (self-service)	53
	Multi-deck (self-service)	24
	Service meat	22
	Other	1
Frozen food	Open (coffin)	58
	Glass door	29
	Multi-deck	13
Dairy	Open multi-deck	86
	Glass door multi-deck	9
	Other	5

The great majority of these cases is supplied nationally by the five major commercial refrigeration manufacturers; a host of smaller manufacturers fabricate and market cases on a more localized basis.

2.3.2 Refrigeration Systems

Refrigeration systems as referred to in this report are the compressor-condenser units which supply refrigerant to the display cases. A distribution of refrigeration systems in the supermarket industry based on annual shipments is shown in Table 7 (3). It is significant to note that 90 percent of the units are conventional, usually less efficient units, implying large market potential for more energy-efficient units. Almost all of these units are supplied by the five major commercial refrigeration manufacturers.

2.3.3 Food Storage Systems

Approximately 20 to 25 percent of the store refrigeration energy consumption is utilized in food storage and preparation areas to support the display cases. Equipment in this category includes, primarily, the coolers which are usually self-contained and of modular construction, and the evaporator coils to refrigerate the coolers and food preparation areas. Table 8 shows the distribution by energy consumption of the storage coolers and preparation rooms.

TABLE 7. - Distribution of refrigeration systems in the supermarket industry (3)

System	Distribution (%)
Conventional air-cooled condensing units, high, medium, and low temperature	79
Remote air-cooled condensing units, high, medium, and low temperature	6
Conventional water-cooled condensing units high, medium, and low temperature	4
Two unit parallel systems, medium and low temperature, air- and water-cooled	
Two unit parallel systems - with satellite compressor, medium and low temperature	10
Three and four unit parallel systems - medium and low temperature, air- and water-cooled, with or without satellite compressors, medium and low temperature	1
Total	100

TABLE 8. - Energy consumption of food storage and preparation systems in a typical supermarket (5,9)

System	Annual energy consumption (kWhr)	Total energy (%)	Total store energy (%)
Medium temperature coolers (20°F evaporator) dairy, beverage, meat, produce storage	150,000	56	7.3
Low temperature freezers (-20°F evaporator) frozen food, meat, bakery storage	64,000	24	3.1
Meat and produce preparation rooms (35°F evaporator)	54,000	20	2.6
Total	268,000	100	13

Coolers are supplied by a number of companies across the country specializing in cooler design and fabrication. Evaporator coils are provided by a few specialty companies. The five major manufacturers do not hold a very large part of the storage systems market.

2.3.4 Heating, Ventilating and Air Conditioning Systems

In a typical northern climate, heating comprises approximately 8 percent and air conditioning about 4 percent of the total supermarket load. A large variety of split systems and self-contained systems are available. The type of system is dependent on store size, store configuration, geographical location, and store engineers and designers. Aside from special evaporators necessary for the high dehumidification load and low return air temperatures, supermarket HVAC systems are built up from standard HVAC equipment. The HVAC systems are usually provided by two or three major HVAC manufacturers who often do the system design and installation.

Use of refrigeration compressor heat rejection to supplement or replace electric or gas heat for dehumidification reheat and space heat has grown rapidly in recent years. In 1975, 59 percent of new stores had installed heat reclaim units; in 1979, reclaim units were installed in 96 percent of new stores (10). Heat reclaim coils are made by a variety of companies specializing in supermarket applications. Even in northern climates, properly designed heat reclaim units can provide all the necessary space heating requirements (11,12).

2.3.5 Hot Water Systems

An average supermarket uses between 300 and 500 gal of hot water per day, most of it during cleaning operations. While any number of installers will put together a regular hot water system, three manufacturers currently hold most of the market in water heating by heat reclaim from compressor heat rejection. Heat reclaim units have been slow to catch on; not as simple as air heat reclaim coils, these units must have the capability to be cleaned of scale accumulation inside the tubes. In 1979, over 70 percent of new stores included heat reclaim units for water heating; numbers are not available for all stores (10,13).

2.3.6 Energy Conserving Devices

Energy-conserving devices range from improved compressor units to small humidity sensors to night covers for cases. There are large numbers of manufacturers competing for the energy conservation dollar, and the refrigeration manufacturers are in the thick of the competition. This subject is addressed in detail in Section 4.

2.4 Identification of Market Segments

The supermarket industry, which is a customer of energy-saving equipment, may be divided into market segments. This subsection discusses three primary facets of the marketplace: commercial, geographic, and psychographic.

2.4.1 Commercial

2.4.1.1 New Stores

Approximately 2000 to 2500 new stores are opened annually. In 1978, 4.1 percent of the larger stores in the country were new stores. This trend is expected to continue. The average cost of store equipment and fixtures, including installation, was almost $500,000. Display cases, coolers, and refrigeration equipment alone make up 50 to 60 percent of this figure: the remainder is for HVAC equipment, lighting, cash registers, and equipment installation charges.

New stores tend to be larger, on the average, than current stores, and are located primarily in neighborhood and community shopping centers. Except in the northwest, companies with sales over $500 million were the most active store developers (8).

2.4.1.2 Remodeled Stores

In 1978, 3.5 percent of all larger stores completed a major remodel (over $50,000) and 6.7 percent of these stores completed a minor remodel (under $50,000). While many of these remodels included replacement or upgrading of equipment for energy efficiency, the primary goal of remodels is to increase sales. The sales area of the average remodeled store increased 18 percent, and weekly sales increased an average of 30 percent after remodeling (8). Major store remodels are completed every 10 to 15 years, and are performed as often as every 8 years by some companies (11).

2.4.1.3 Acquired Stores

Approximately 3 percent of all stores in 1978 were recently acquired by purchase or merger. Most of these stores were remodeled; the cost of equipment and fixtures after the store was acquired averaged $93,000. Average weekly sales increased 29 percent after acquisition and remodeling (8).

2.4.2 Geographic

The United States is divided into seven basic regions as follows:

a. New England
b. Middle Atlantic

c. Southeast
d. East Central
e. West Central
f. Southwest
g. Pacific

Occasionally, the Mountain States are considered an eighth region (14).

There are 79 basic market areas and 94 market area title cities in the United States. Table 9 shows their coverage with respect to population and food stores. A significant fraction of the population and food stores are located in the top ten market areas (see Table 9). The majority of the top ten market areas occur in the East Central, Middle Atlantic, and New England regions. Thus, a significant fraction of supermarkets operates in regions of high annual temperature extremes (2,5). Over half the new store construction in 1978, however, was reported in the South (8).

2.4.3 Psychographic

Primary benefits sought from equipment are lower operating cost, ability to enhance sales, reduced service costs, low initial cost, good appearance. While user status (snob appeal) of a product may be a consideration, company personalities and business relations or policies are far more important in marketing a product.

TABLE 9. - Supermarket equipment market distribution (2,5)

Category	79 basic market areas (%)	Top ten market areas (%)
Population	87	37
Food stores	85	35
Food store sales	88	38
Convenience stores	88	27
Supermarkets	85	31

2.5 Marketing and Sales of Store Refrigeration Equipment

2.5.1 Distribution Channels

Distribution of commercial refrigeration products is generally accomplished through a combination of the following:

a. Manufacturer - Name-brand manufacturing of a single product or line of products by one manufacturer for another manufacturer. (For example, a small regional cooler manufacturer makes name-brand walk-in coolers for a larger manufacturer in addition to his own brand name.)

b. Factory branch - Some manufacturers revert to this method of distribution in areas where they do not have an adequate franchised distributor. The branch functions much as a distributor - with sales to dealers as well as direct sales.

c. Distributor - For many years, the franchised distributor with an identified territory has been the principal mode of distribution in this industry. However, a slow process of evolution has been inching the industry away from this mode in favor of direct selling to high-volume users. The distributors are reverting to installation and service contractors.

d. Dealer - Normally, dealers purchase from distributors for resale. In areas where distributors do not exist, the manufacturer may sell to a dealer directly.

e. Wholesale grocery warehouse or co-op grocery warehouse serving voluntary or co-op members - This type wholesale grocery operation with an equipment program to serve its members generates high-volume sales that makes this channel of distribution attractive to manufacturers. In effect, this wholesale grocery warehouse operation performs the sales functions of the distributor. If installation and service functions are not included in this organization, these functions are contracted out to installation and service contractors.

f. Customer - Direct sales from manufacturer to customer are also made to large chains who have in-house engineering capability to specify equipment and contract for installation. Some direct sales are made to small chains and individuals where circumstances warrant.

2.5.2 Geographical Coverage

The five major national manufacturers have strong coverage in their geographical location because of freight advantages to the customer. Factory locations, including branch factories, are:

a. Middle Atlantic (New Jersey - 2)
b. East Central (Michigan)
c. Southeast (Georgia)
d. West Central (Missouri)
e. Southwest (Texas)
f. Pacific (California - 2)

2.5.3 Sales Territories (7)

Each manufacturer has its own ideas on sales organization and territories, however, they are all influenced by the population concentration. A typical organization will include:

a. Zone - managed by a zone manager with several regional or district managers reporting to him

b. Region or district - managed by a regional or district manager with several distributors reporting to him. This level also works direct accounts. A factory branch operation could function in place of a regional or district manager

c. Distributor territory - managed by distributor with several dealers reporting to him. A factory branch operation could function in this same capacity should circumstances warrant

d. Dealer territory - managed by dealer with his retail salesmen reporting to him.

2.5.4 Inventory Levels and Locations (7)

Finished goods inventories are minimal in this industry due to the customizing of standard basic models for volume users. Some models of cases and condensing units are standardized in sufficient quantity to justify stocking a limited inventory to meet short lead-time deliveries. These inventories are normally maintained at the factory or factory branch. Some manufacturers only maintain an inventory of finished products that are kept in a constant flow of production with monitoring controls that reduce the inventory very rapidly when necessary.

2.5.5 Transportation (7)

Currently, motor freight lines are the principal movers of equipment in this industry. Other modes of transportation in order of their importance are:

a. Van lines by contract
b. Manufacturer's own company trucks
c. Rail
d. Customer pickup
e. Air (very rare due to size of equipment and cost).

2.5.6 Promotion (6)

2.5.6.1 Advertising

The three top commercial refrigeration manufacturers do considerable trade journal advertising, while the remaining two do very little. Buyers and decision makers of the larger chains say that such advertising has little or no influence on their decisions and would be offended if the manufacturer had not given them private demonstration or presentations on any new product prior to its being advertised.

2.5.6.2 Personal Selling

The ability and dexterity of the individual salesman is one of the major keys to success of any sales program in this industry. Due to the technical nature of this product and the many options and variations that result in completion of manufacture at the time of installation, much technical support is required from the manufacturer's technical staff.

2.5.6.3 Sales Promotion

The following methods of sales promotion are used by all the commercial refrigeration manufacturers:

a. Publication and dissemination of brochures, catalogs, specifications, incentives, and material samples

b. Participation in large national conventions, particularly FMI, with product displays and sales engineers

c. Participation in state grocery conventions, usually on a joint basis with the distributor serving the area

d. Participation in wholesale grocers' annual shows for their members

e. Sales presentations tailored to specific accounts (normally high-volume users) at their place of business, or at the manufacturing plant where a plant tour would be part of the presentation.

2.5.6.4 Publicity

Responsible and appropriate releases to the media on new products and new ideas will often produce publicity when considered newsworthy by the media. Participation in public educational presentations, seminars, discussion panels, and convention programs by company personnel on topics of current interest will produce publicity if the media are represented at such affairs.

2.5.7 Pricing Policies (7)

All manufacturers in this industry price equipment FOB factory, all taxes where applicable are extra, and all prices are subject to change without notice. Following is a list of levels of pricing:

a. List price

b. Dealer price

c. Distributor price

d. Wholesale price

e. Direct by treaty

f. Direct by quote.

Discounts on the following types are available from most of the manufacturers:

a. Dealer discounts

b. Distributor discounts

c. Wholesale discounts

d. Cash discount

e. Volume discounts.

The following allowances are available from most manufacturers:

a. Crate allowance - when shipped or picked up uncrated

b. Freight allowance - normally based on distance from factory

c. Year-end volume rebate - based on volume attained in a fiscal year

d. Market allowance - limited to specific market area or account in order to meet competition.

2.6 Current Trends

Like any industry entrenched in its ways, the supermarket industry has been slow in responding to the increasing limitations and costs of energy. Merchandizing practices and ideas have constrained some possible energy-efficient improvements; retailers would still rather spend money to increase sales rather than to decrease operating costs. The commercial refrigeration manufacturers have slowly responded with many and varied small improvements in the energy efficiency of their products. There has been no real system integration of the various ideas. Furthermore, the manufacturers do not have the capital and the manpower to undertake a large-scale program to develop a completely integrated system in a short time.

Industry statistics, however, are showing that awareness of the energy situation is increasing. In 1979, 96 percent of new stores were constructed with heat reclaim, compared to 59 percent 4 years before. In 1978, 26 percent of new stores installed computerized energy management systems, compared to 18 percent the previous year. In another example, the use of glass door multideck dairy cases in new stores doubled from 6 percent of stores in 1977 to 12 percent of stores in 1978 (8). Many chains and larger independents have hired energy engineers, or created energy departments to better monitor energy consumption, to design and innovate more efficient stores, and to ensure that the most energy-efficient systems are obtained from the manufacturers.

3. ANALYSIS OF SUPERMARKET ENERGY SYSTEMS

A detailed analysis of supermarket refrigeration systems by means of a computer simulation program was undertaken as part of this study. This chapter describes the interrelationships among the various energy systems in a supermarket, then focuses on the refrigeration systems with a description of the computer model and results obtained from that model.

3.1 Energy Usage in a Typical Supermarket

The typical average supermarket utilizes about 200 hp of refrigeration compressors, requires about 50 tons of air conditioning, and uses additional power for lighting, display case defrosting, and miscellaneous functions. Numbers for proportion of energy used for each of the major energy systems are given as percentages in Table 10.

TABLE 10. - Typical store annual energy usage (15)

Use	Fraction (%)
Refrigeration system (54 percent)	
• Low temperature compressors	21
• Medium temperature compressors	18
• Case fans and lights	9
• Case anti-sweat heaters	6
Lighting (25 percent)	
• Sales area ceiling lights	19
• Back room, office, sign lights	6
Space conditioning system (17 percent)	
• Heating (electric)	8
• Air handler blower	5
• Air conditioning	4
Miscellaneous (4 percent)	4
Total	100

Figure 1 demonstrates the energy interrelationships among the various supermarket systems. The HVAC load, for example, is a function of outside ambient conditions, store design, lighting load, refrigeration spillover air, and a use factor which includes variables such as store population, deliveries, etc. The store ambient condition is a result of the HVAC system responding to the HVAC load. The store ambient condition is the primary factor in the refrigeration load. Additional influences on the refrigeration load are store design, food requirements, lighting levels, and a use factor which includes store population, stocking, etc. The refrigeration load is maintained by the refrigeration system. The refrigeration system can, in turn, aid the HVAC system by heat reclaim, or by adding case spillover air to the air conditioning system. Similarly, heat reclaim coils can help provide the hot water requirement, which is a function of the activity occurring within the store, food preparation, cleaning, etc. Finally, the defrosters, or anti-sweat heaters, are dependent primarily on the ambient humidity in the store and a store use factor. Thus, a detailed analysis of store energy systems involves characterization of a complex series of relationships among several different systems. The major energy-using systems are described below.

3.1.1 Refrigeration System

The refrigeration system employs a normal Rankine vapor-compression cycle utilizing different refrigerants according to temperature range as described in Table 11. A typical system is shown in the schematic in Figure 2. Suction-cooled reciprocating compressors are used singly or in parallel units of

TABLE 11. - Refrigerant usage and temperature ranges for typical supermarket refrigeration applications

Temperature level	Evaporator temperature	Refrigerant
Low temperature	(-40 to 0°F evaporator)	Refrigerant 502
Medium temperature	(0 to 30°F evaporator)	Refrigerant 12
High Temperature	(30 to 45°F evaporator)	Refrigerant 12, 22

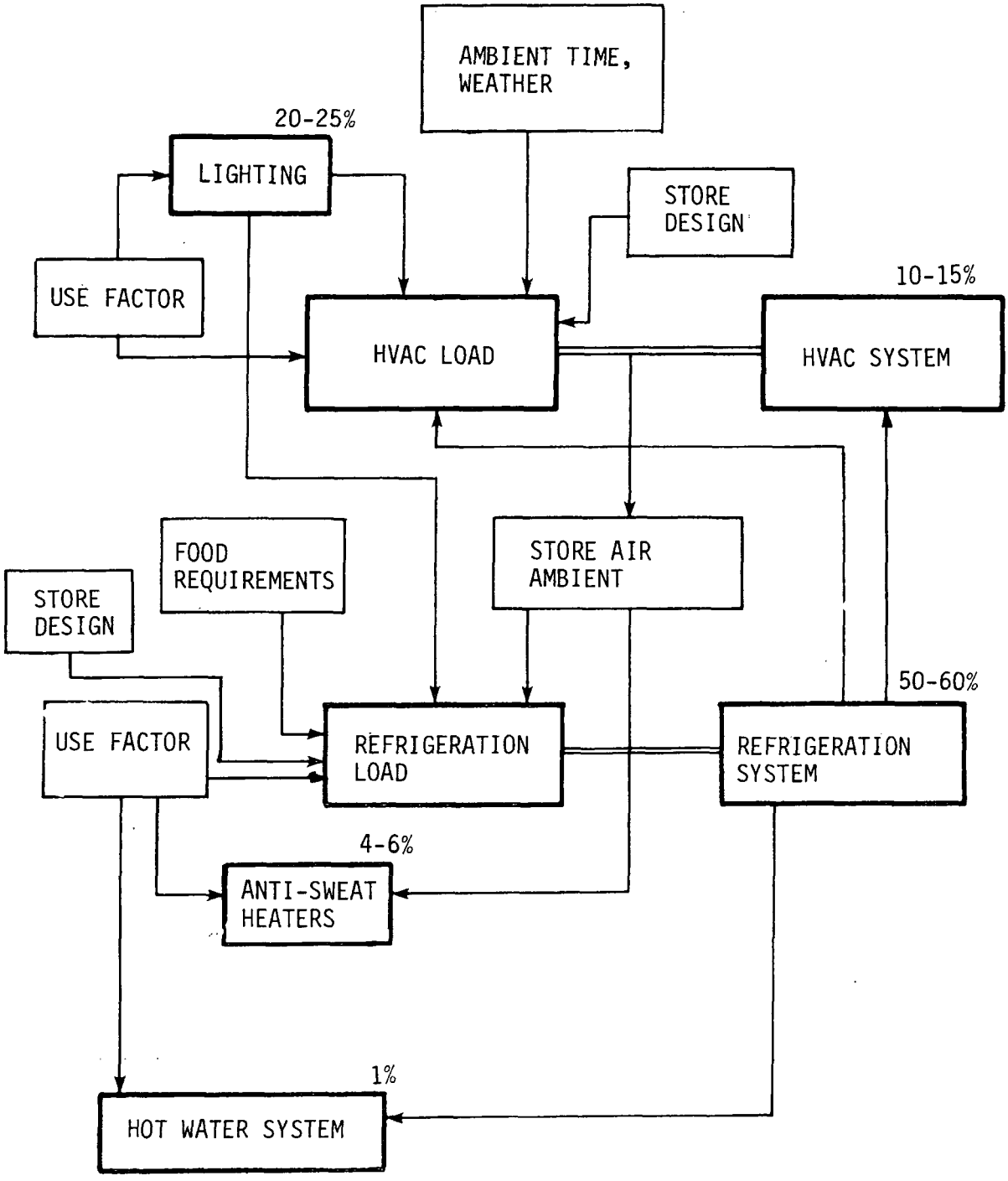

FIGURE 1. - Energy relationships among various supermarket systems.

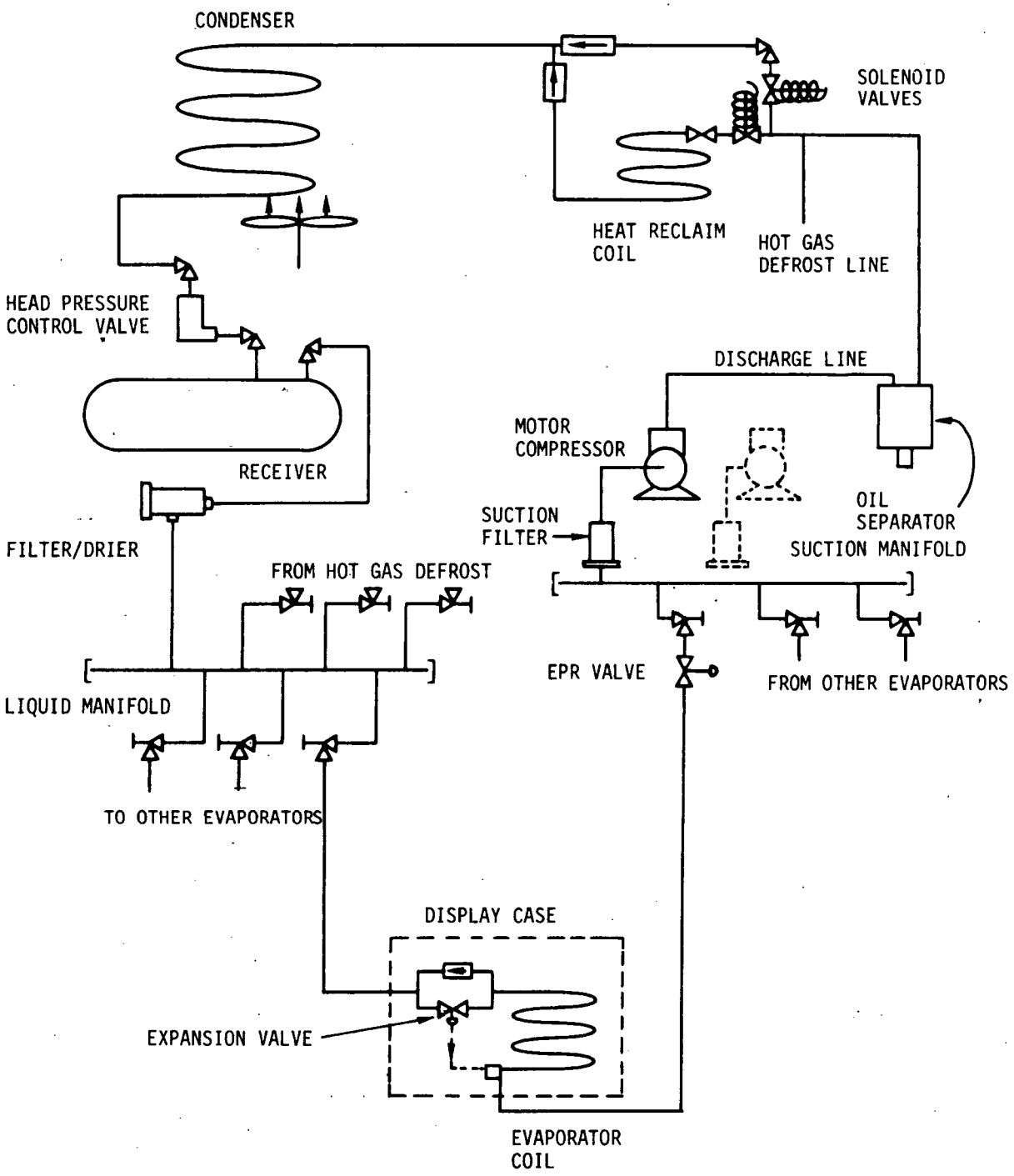

FIGURE 2. - Schematic of a typical supermarket refrigeration system.

up to five compressors. The hot gas from the compressor discharge exits to the condenser, but can be used in a heat reclaim coil on the way. The receiver smooths out variations under wide ranges of operating and ambient conditions, and assures liquid at adequate pressures to the evaporator expansion valves. The expansion valves regulate flow of refrigerant to maintain an adjustable desired superheat temperature (6 to 10°F) at the evaporator exit, from where the gas passes to the suction manifold of the compressor.

Normally, several evaporators are fed by a single compressor-condenser unit. Refrigerant flow to each evaporator is controlled separately either by a solenoid valve related to display case air temperature, or an evaporator pressure regulator (EPR) which throttles refrigerant flow to maintain evaporator pressure. Thus, as cases cycle on and off, or go into defrost mode, the compressor suction conditions are constantly changing. Pressure controls allow the compressor to operate in a certain bandwidth of suction pressure. The suction pressure fluctuates with refrigeration load, and since the compressor capacity cannot always match the refrigeration load, the compressor must cycle off and on as it approaches the suction pressure bandwidth limits.

The condenser pressure, or head pressure, tends to adjust itself such that saturated liquid is obtained at the condenser exit. Head pressure can be maintained by causing the liquid to flood back into the condenser. This then cools the liquid below the saturation temperature, that is, subcools the liquid.

In some installations, where more than one compressor may be connected in parallel, part of the compressor discharge gas can be routed, in a reverse flow direction, through the evaporator. The melting of the frost on the coil condenses the gas, and it joins the remaining refrigerant at the liquid header, ready for expansion into the operating evaporators.

3.1.2 HVAC System

The supermarket HVAC system is built up from standard HVAC equipment with two notable exceptions: evaporators and hot gas coils. Due to low return air temperatures and high dehumidification requirements, special evaporators are often used. Hot gas coils are employed to take advantage of compressor heat rejection for dehumidification reheat and space heating.

It is the dehumidification and ventilation requirements that make supermarket systems different from standard HVAC applications. There are two main categories of supermarkets: those with many open cases causing a high negative cooling load, with relatively dry, low temperature return air, and those with less open cases and a warmer, moister return air. In many of the former stores, only outside air is conditioned, then mixed with store air. In the latter type of store outside and store airflows are mixed prior to conditioning. Other variations

include split or separate evaporators for outside and store air, and various degrees of partial mixing of store and outside air before and after conditioning.

Most supermarket HVAC systems operate on space dewpoint control. Air is typically discharged at the front or throughout the store and returned in the ceiling at the rear or underneath the display cases to minimize cold aisles.

The HVAC system consumes a fraction of the power used by the refrigeration system, and thus will not be addressed in detail in this study. Its importance lies in the fact that relatively small changes in ambient temperature and humidity can cause significant load variations in the refrigeration system.

3.1.3 Lighting

While store lighting consumes a significant fraction (20 to 25 percent) of store energy, energy improvements in lighting are beyond the scope of this study. Currently, energy savings in lighting are accomplished by reduction of lighting levels, reduction of height of lights, time programmed lighting, replacement of incandescent bulbs with fluorescent lights, and use of solid-state ballasts for fluorescent lights.

3.1.4 Case Anti-Sweat Heaters

While these heaters are part of the refrigeration system, they can be considered separately since they are dependent primarily on the ambient humidity. These electric heaters prevent condensation on display cases and glass doors. Their energy consumption can be decreased by use of a humidity control which turns them on only above a minimum humidity level.

3.1.5 Summary

It is evident that, while the various energy systems are interrelated, it is really the refrigeration system which consumes most of the energy. This study, as a result, has focused primarily on the refrigeration system.

The intricacies of the refrigeration system, and its complex interactions with other supermarket systems, can best be quantified by means of a computer model. Development of a computer program that would simulate the refrigeration system and ultimately integrate all the energy systems to simulate supermarket operation was begun as part of this study. The model is described in the following subsection.

3.2 Computer Model

The task of modeling the energy systems in a supermarket was undertaken with two main goals: to simulate the operation of a supermarket; and to determine the sensitivity of various changes and improvements in the supermarket energy systems to the overall efficiency of the operation.

A complete model to simulate supermarket operation requires a refrigeration system model, a space conditioning system model, and a dynamic interaction between the two. As of this writing, the most important part of the model, the refrigeration system has been completed and tested. This part of the model was used for the analysis described in this study. The results cited in this study are assumed to be accurate since they are based on sensitivity analyses and trend projections, for which a detailed integrated model is not necessary. Eventual completion of the model will require integration of the refrigeration system with the space conditioning system. The operating model, that of the refrigeration system, is described below.

3.2.1 Refrigeration Model

The computer program models the refrigeration cycle ABEHA shown in Figure 3. In order to simplify the calculation of pressure drops, the program follows the cycle ABCEHIA, where BC and IA are discharge line and suction line pressure drops, respectively. Given the pressure and temperature conditions at compressor suction A and compressor discharge B, the refrigerant mass flow and compressor power are calculated. The total heat rejection CE is computed and compared to the condenser rated heat rejection at the given ambient conditions. If the total heat rejection is greater than the condenser rated heat rejection, the condenser must operate at a temperature difference (that is, difference between condensing temperature and ambient air temperature) greater than the design temperature difference. If the rated heat rejection is greater than the total heat rejection, the temperature difference must be lower than design. The condensing temperature is adjusted accordingly, causing the lines BE and CE to move upward or downward. This changes the compressor discharge conditions B, and the process is repeated until the total heat rejection balances the compressor rated heat rejection. Point E is now known, and a constant enthalpy throttling process defines point H. The refrigeration effect or compressor capacity HA is then calculated.

If the condenser pressure is controlled, the lines BE and CE will not move. If the condenser rated heat rejection is greater than the total heat rejection, subcooling of the condensed refrigerant occurs and point F is reached. The expansion valve now throttles the refrigerant to point G and the refrigeration effect is GA.

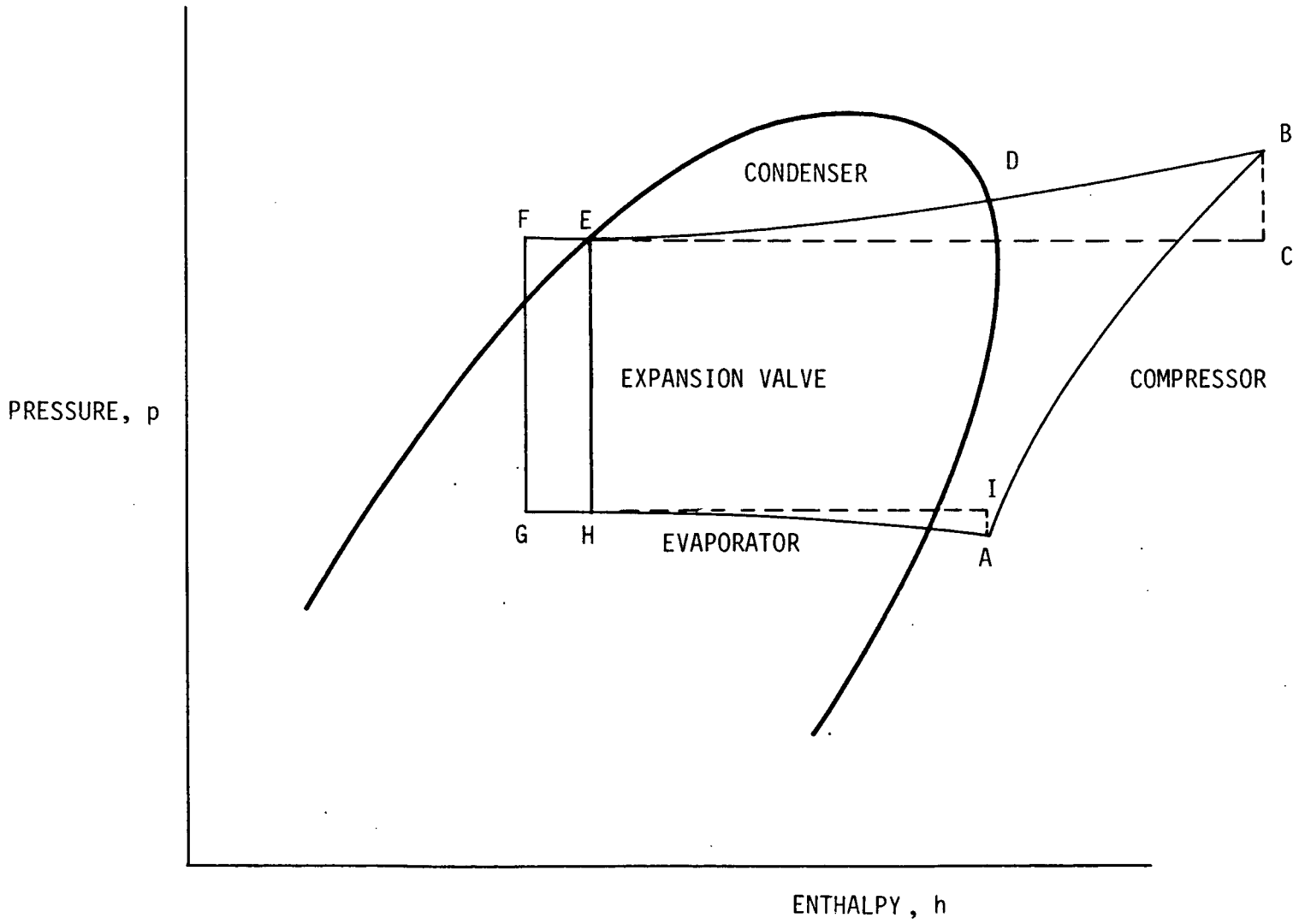

FIGURE 3. - Pressure enthalpy diagram showning computer modeling of refrigeration cycle.

3.2.2 Program Assumptions

In order to utilize the steady-state model of the refrigeration cycle described above as a basis for the refrigeration systems computer program, a number of simplifying assumptions were made. These assumptions are explained in the subsections which follow.

3.2.2.1 Compressor Efficiencies

The compressor is modeled by a volumetric and an overall efficiency. Compressor overall efficiency is the product of the isentropic efficiency and motor efficiency. Efficiency curves versus pressure ratio were obtained by examining manufacturers' performance curves for five commonly used refrigeration compressors of various sizes. This procedure is described and the efficiency curves are presented in Appendix A. The efficiency curves were found to match the performance curves of refrigeration compressors to within 15 percent. Thus, all compressors are assumed uniformly efficient. Although this is not true in the real case, neither are there obvious trends, such as increased efficiency with compressor size, which should be taken into account. This assumption also enables the model to examine the effect of other parameters on system performance independent of compressor selection.

3.2.2.2 Case Refrigeration Load

Since the display cases are not modeled in detail, average numbers must be used for refrigeration loads. Loads are input per unit time, and are, for that time period, independent of ambient temperature and humidity conditions. Thus, while influence of ambient store conditions is not dynamically built into the program, by knowing or assuming a case load variation with ambient conditions, the program can be used to calculate refrigeration power consumption over a range of store ambient conditions.

3.2.2.3 Steady-State Conditions

The basic model of the refrigeration cycle computes a steady-state cycle balance for a unit time. In reality, this time period is very small, since transient conditions always exist at the compressor suction. The program uses an average suction pressure condition, and a minimum time unit of 1 hr. During this time period, the refrigeration effect, or compressor capacity, and compressor power consumption are calculated.

Two ways to address the problem of compressor power consumption were considered:

a. Set suction pressure, which determines compressor running time to match load

b. Let suction pressure float to match load under continuous compressor operation.

The former method was used in the program because of its more general applicability to compressor systems in supermarkets. Suction pressure can be set to simulate a particular pressure control system or to match compressor cycling times. The latter method is accurate when compressor capacity is close to the load, but calculates erroneously high power consumption due to low suction pressure when load drops or compressor capacity increases.

Dividing refrigeration load by compressor capacity calculates the fraction of the time period during which the compressor must operate to satisfy the refrigeration load. Multiplying compressor power by this time fraction calculates the total compressor power for refrigeration in the time period. This is shown below.

$$\text{Average compressor power per unit time} \times \frac{\text{Refrigeration load/unit time}}{\text{Compressor capacity/unit time}} = \text{Total compressor power to maintain refrigeration load per unit time}$$

As the unit times are added up to calculate monthly and yearly averages, the inaccuracies of using hours rather than milliseconds as unit time periods become less significant.

3.2.2.4 Multiple Compressors

In dealing with multiple compressors in parallel, the program calculates a compressor capacity for each operating option, for example, one, two, or three compressors operating simultaneously. Each option may have a different efficiency, depending on suction and condenser conditions. Since the program cannot calculate the time fraction that each option will operate in response to transient load conditions, it computes all possible combinations of operating time fractions that match the load to within 20 percent, and picks the combinations which give maximum and minimum power. The real power consumption for the given load lies somewhere in between these two numbers, which, for most systems, are not very far apart. The program assumes that all parallel compressors are piped through the same condenser length; therefore, a slight advantage in efficiency is gained when less than the total number of parallel compressors is operating.

3.2.3 Program Structure

The program is divided into four primary routines described briefly below:

a. SUPMKT - the mainline program which handles input, output, and averaging calculations; calls CONDNS or MULTCOM

b. MULTCOM - this routine directs calculations for parallel compressor systems; calls CONDNS

c. CONDNS - handles all condenser calculations, including heat reclaim and subcooling; calls BASCYC

d. BASCYC - handles compressor calculations.

Flow charts of these four main routines are provided in Appendix B. In addition, the program includes miscellaneous routines to calculate liquid, vapor and two-phase properties of refrigerants 12, 22 and 502. These routines, based on refrigerant property equations developed by DuPont (16), were originally developed at MIT (17) and used at Oak Ridge National Laboratory (18),

3.2.4 Program Capabilities

The following is a list of program capabilities applied to refrigeration systems:

a. Single compressor condensing units

b. Remote condensers

c. Ambient subcooling

d. Floating condenser temperature

e. Condenser temperature difference correction with load

f. Additional subcooling coil after receiver

g. Pressure drops

h. Thermodynamic properties for R-12, 22 and 502

i. Auxiliary power inputs for case lights, fans, heaters

j. Multiple equal parallel compressor units (calculation of maximum, minimum power)

k. Hot gas defrost

l. Stage 1 heat reclaim

m. Stage 2 heat reclaim (condensing pressure raised to provide greater heat reclaim)

n. Computation of yearly averages (input hours per year at different ambient conditions).

3.2.5 Program Verification

Each of the capabilities listed above was carefully checked by hand calculation. Compressor calculations were checked against manufacturers' performance curves. The program's computation of annual power consumption for given operating condition compares favorably with annual estimates provided by refrigeration manufacturers. Detailed program testing based on actual data from an operating system has not been done. While such verification is desirable before dissemination of the program, or its use in detailed system simulation, it was not imperative for validation of the comparative results used in this study. A sample run of the program is included in Appendix B.

3.3 Sensitivity Analysis

The first step in looking at potential energy savings in refrigeration systems is an analysis of the primary variables in the refrigeration cycle and their effects on energy consumption. Once these variables are identified, concepts and components to affect these variables can be considered.

The computer model was used to determine the sensitivity to energy consumption of five major refrigeration cycle parameters:

a. Compressor efficiency
b. Condenser temperature
c. Suction pressure
d. Liquid subcooling
e. Superheat at suction.

A base case was run with the conditions as shown in Table 12. Each parameter was then varied as the others remained constant, and compressor capacity and power consumption were calculated. The ratio of the refrigeration effect to the compressor power consumption (Btu/Whr), familiar to the industry as the energy efficiency ratio (EER), was used as the sensitivity criterion. Auxiliary power consumption such as display case fans, lights, heaters, and the like, was not considered in this analysis.

TABLE 12. - Base conditions for sensitivity analysis

Parameter	Value
Condensing temperature	90°F
Subcooling	0°F
Superheat at suction	15°F
Evaporator temperature (°F)	Refrigerant
+35	R-22
+20	R-12
+15	R-12
-20	R-502
-25	R-502
-35	R-502

3.3.1 Compressor Efficiency

The system EER varies linearly with changes in compressor overall efficiency (motor efficiency and isentropic efficiency) as shown in Figure 4. For a 10 percent increase in efficiency (that is, an efficiency multiplier of 1.1), a 10 percent increase in EER is noted, since all other conditions remain the same. This is shown on the ordinate scale by the ratio of the new EER to the base EER equal to 1.1.

3.3.2 Condensing Temperature

Figure 5 shows that as the condensing temperature drops, substantial increases in EER are possible. Referring to Figure 3, a two-fold effect of lowering condenser pressure is seen. As the line BE moves downward, compressor work is reduced, while volumetric efficiency increases due to the reduced pressure ratio. As point E moves downward, it must follow the saturation line, and therefore points E and H are shifted to the left. The increased distance HA, combined with the increased mass flow due to improved volumetric efficiency, can result in a significant increase in refrigeration effect. Thus, by reducing condenser temperatures, improvement in EER up to 100 percent is possible. Figure 5 shows that this improvement is independent of evaporator temperature.

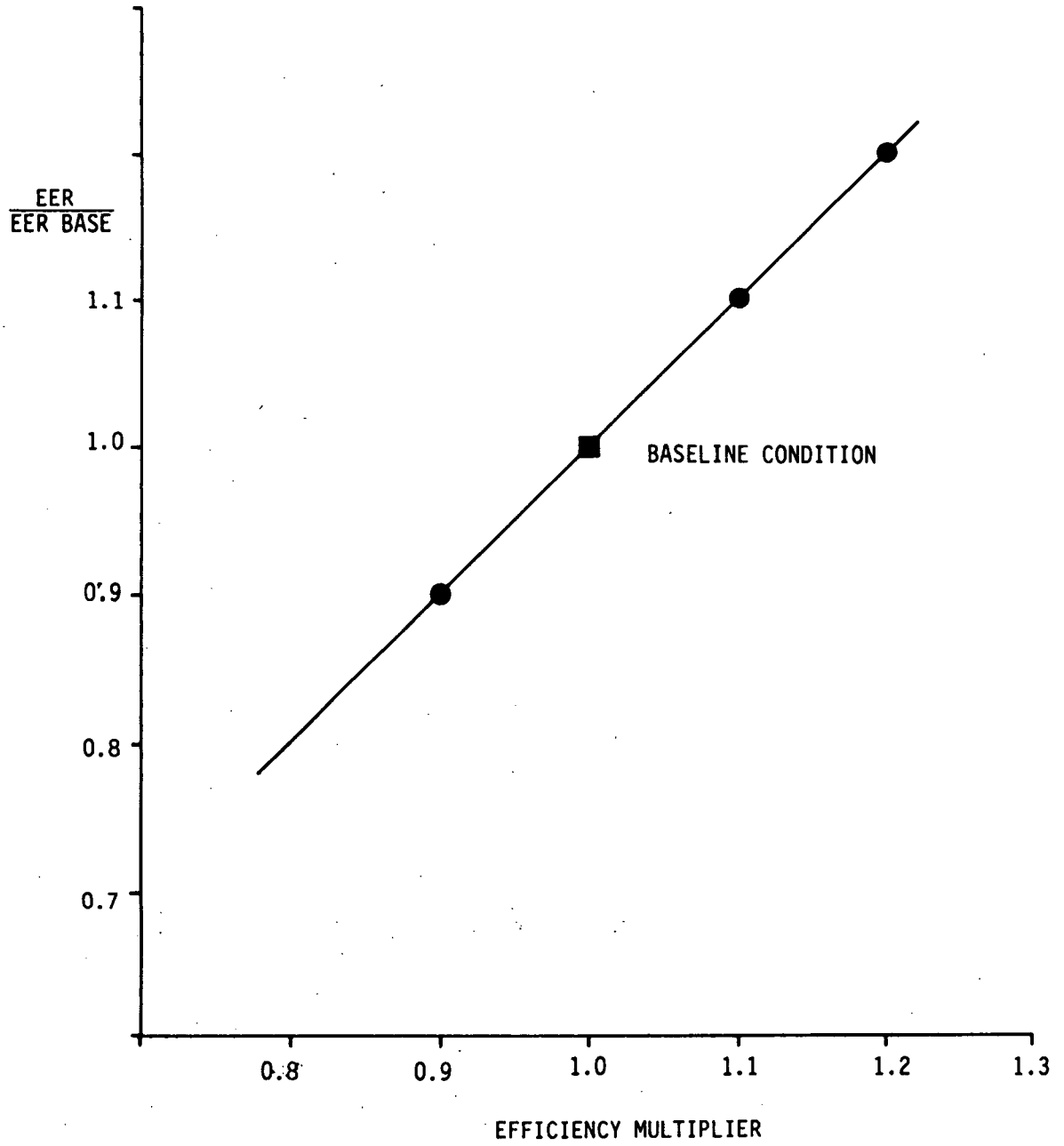

FIGURE 4. - EER ratio versus compressor overall efficiency.

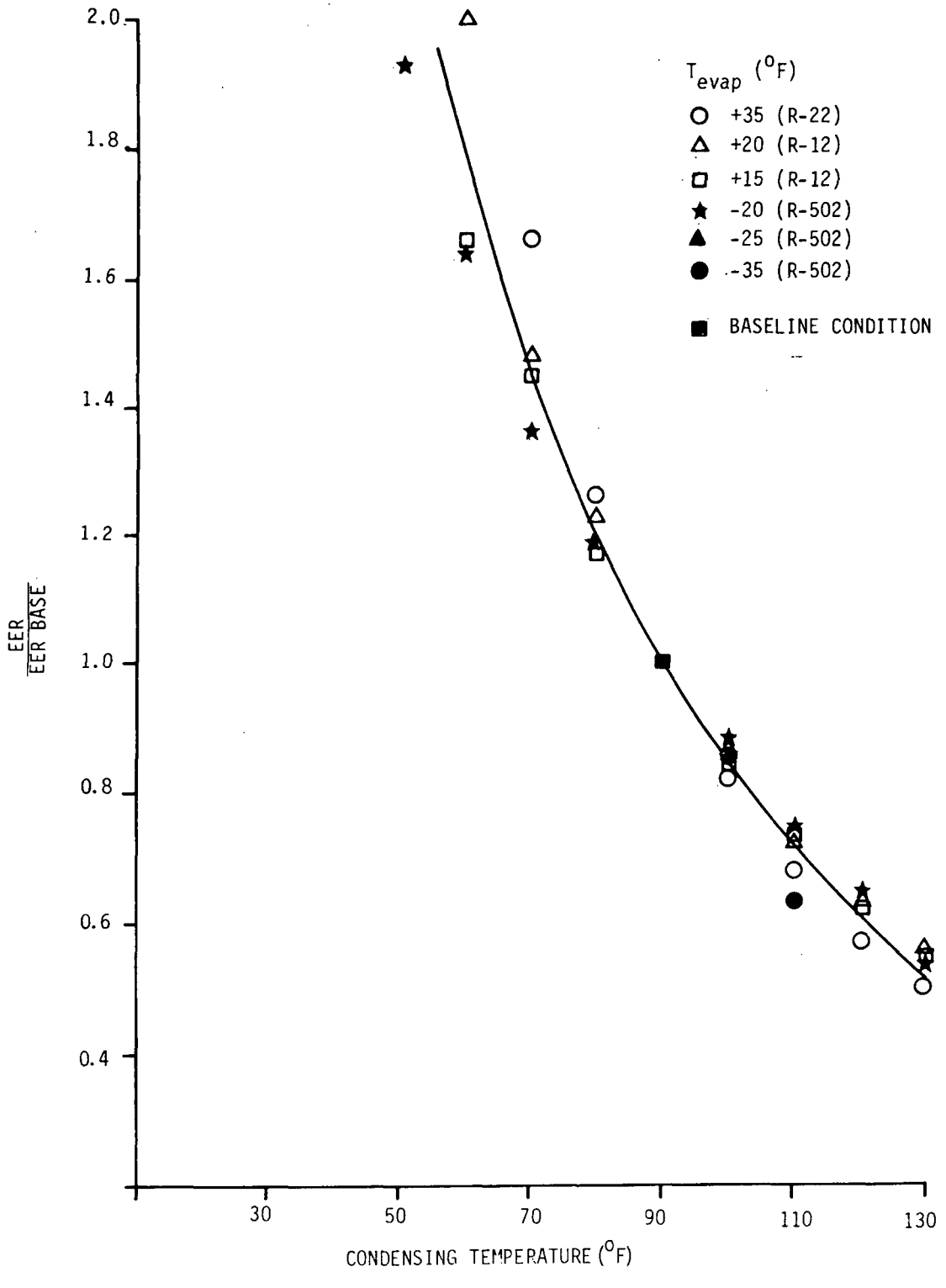

FIGURE 5. - EER ratio versus condensing temperature; no subcooling.

3.3.3 Subcooling

Liquid subcooling, as shown in Figure 6, also contributes substantially to increases in EER. Looking again at Figure 3, subcooling involves moving from points E to F. The increased refrigeration effect is given by the line GA.

Figure 3 can be used to explain why greater improvements in EER are seen at lower evaporator temperatures. The points G and H represent refrigerant vapor quality in the two-phase region; the relative amounts of liquid and vapor are proportional to the distance from the respective saturation line. Thus, if the evaporator temperature is lowered, the line GHA moves downward, and the point H now represents a higher quality, meaning less liquid is entering the evaporator. Therefore, for evaporators operating at lower temperatures, the effect of subcooling EF or GH causes a greater percent increase in refrigeration effect, and therefore, EER. This is evident in Figure 6. A similar argument can be used to explain the greater increase in EER at higher condensing temperatures, as shown in Figure 7. Based on Figures 6 and 7, subcooling offers possible increases of 40 to 60 percent in EER, depending on the evaporator and condensing temperatures.

3.3.4 Suction Pressure

Figure 8 shows the possibilities for increases in efficiency by raising the compressor suction pressure. In Figure 3, an increase in suction pressure is seen by an upward movement of line HA. The reduced mass flow due to density increase at the compressor suction is more than compensated by a decrease in compressor power and increases in the volumetric efficiency and the proportion of refrigerant available to the evaporator in liquid form. For a range of evaporator temperatures, an increase of 10 lb/in^2 in the suction pressure can result in a 20 percent improvement in EER.

In a real system, the suction pressure is dictated by the evaporator temperature, and cannot easily be raised. Figure 8, however, also shows a possible improvement in EER by narrowing the suction pressure bandwidth for compressor operation. For example, current controls operate the compressor over a bandwidth of 18 to 20 lb/in^2 as shown by the cut in and cut out pressure limits in Figure 8. Since compressor capacity increases with suction pressure, the compressor spends less time operating above the average suction pressure than below it, for a given load. Calculations based on computer-calculated compressor capacities show that, for a typical low temperature compressor operating at constant load across a 20 lb/in^2 suction pressure bandwidth from its cut in pressure to its cut out pressure, the mean operating suction pressure ($p_{mean\ 1}$ in Figure 8) is several lb/in^2 lower than the midpoint pressure (p_{base}). Reducing the bandwidth to operate at $p_{mean\ 2}$ could improve EER by up to 5 percent.

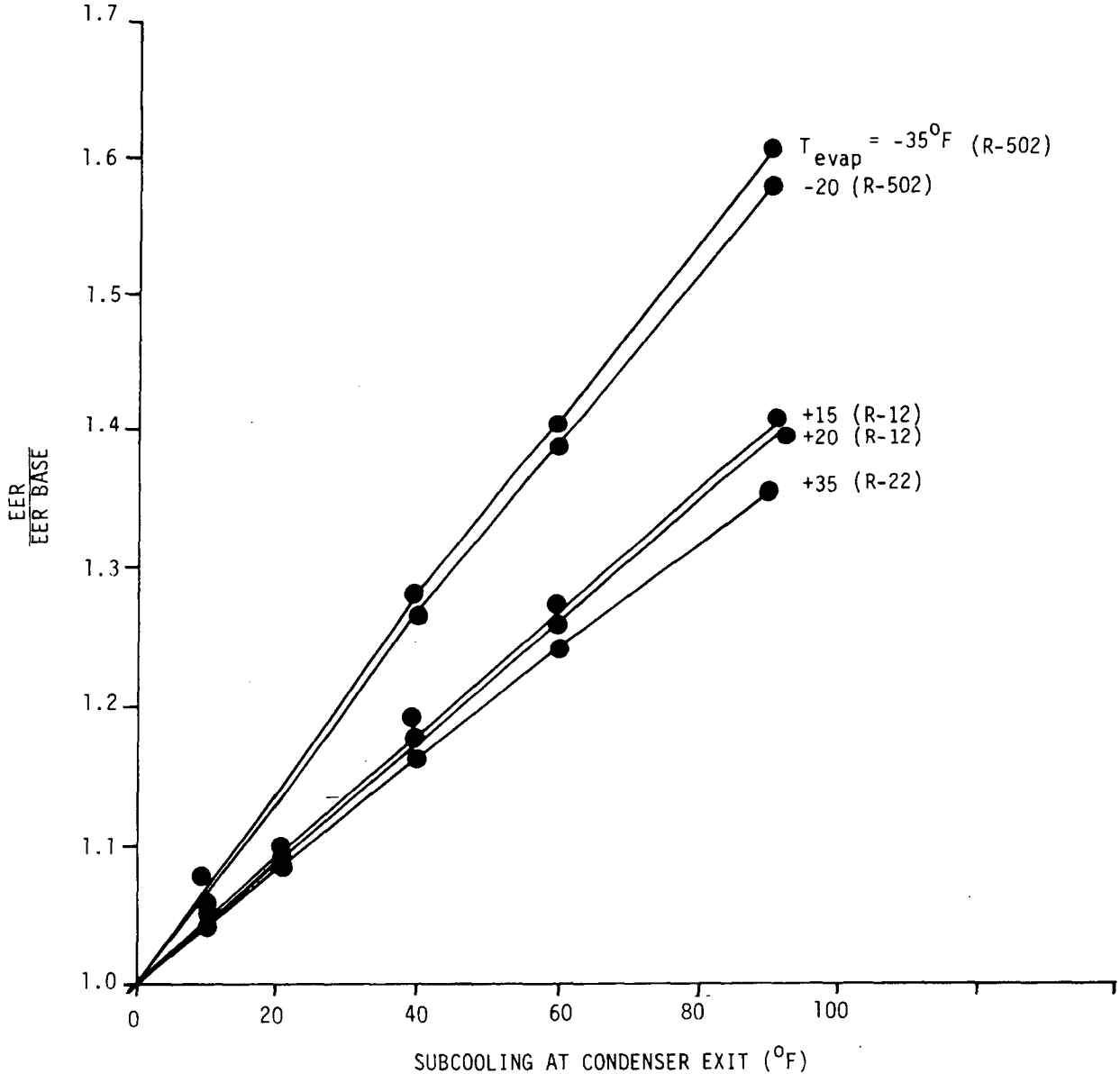

FIGURE 6. - EER ratio versus subcooling; T_{cond} = 90°F.

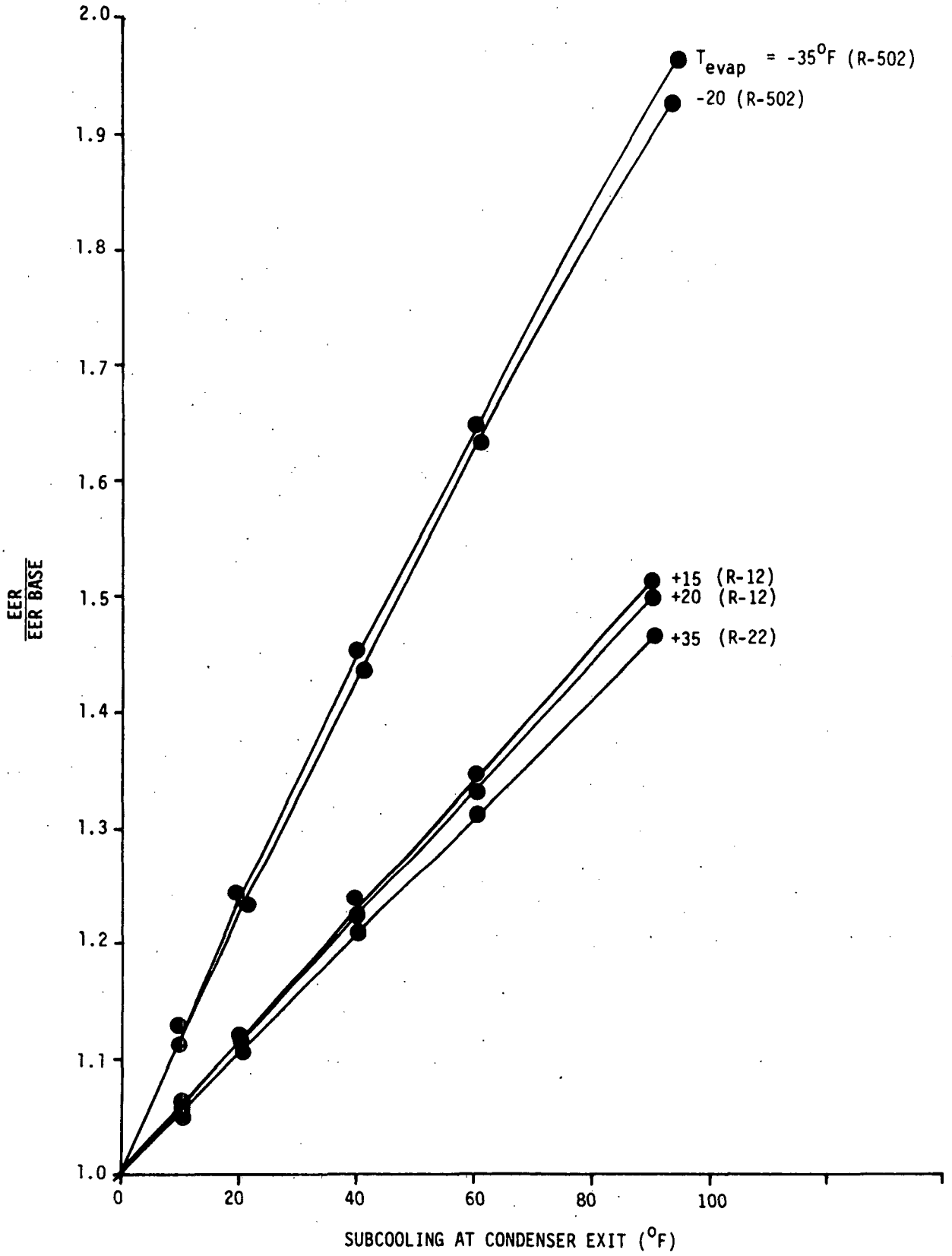

FIGURE 7. - EER ratio versus subcooling; T_{cond} = 130°F.

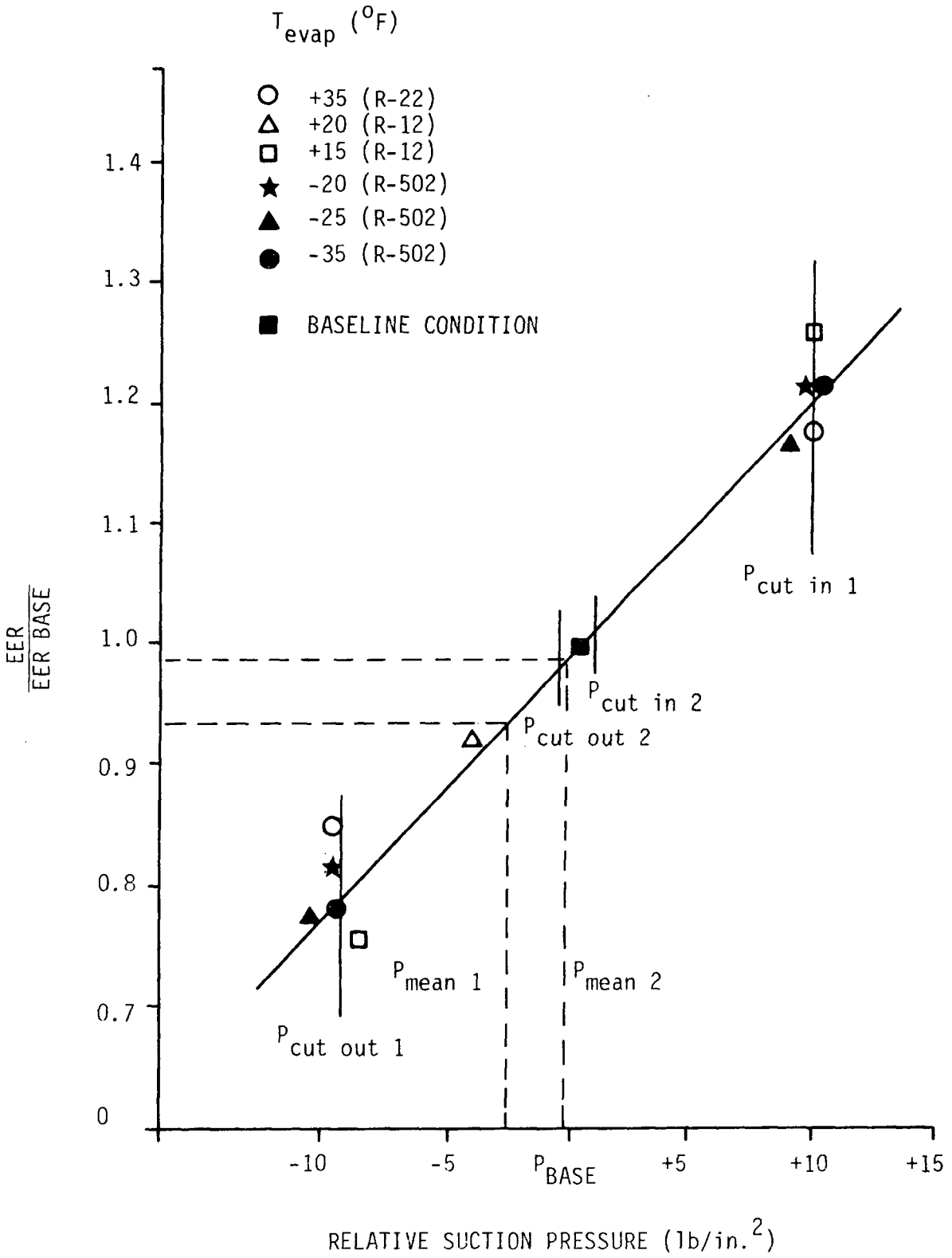

FIGURE 8. - EER ratio versus suction pressure showing average suction condition for two bandwidths.

Since the majority of compressors are oversized by as much as 25 percent of the load, they tend to operate in the lower end of the pressure bandwidth, and often cycle off due to drop in suction pressure below the cut out pressure. This occurs with increasing frequency as the load drops and the compressor "short cycles." Often, a solution is to lower the cut out pressure, causing the compressor to operate even more inefficiently. An electronic pressure control system coupled with a method of compressor capacity control could prevent the necessity of field adjustment of pressure control and its resulting inefficiency. Furthermore, reducing the bandwidth and electronically matching compressor capacity to the load could take advantage of low load situations, realizing energy savings of 10 to 20 percent (9,13).

A current method of taking advantage of electronic control is duty cycling. The compressors are turned off for extended periods of time; they then operate at a higher average suction pressure while on, resulting in energy savings of up to 5 percent. Typical off times are 3 to 5 min out of every 15 min. The applicability of duty cycling is limited; it can cause undesirable temperature variations in the refrigeration system, and it cannot take advantage of extremely low load conditions (13).

3.3.5 Superheat at Compressor Suction

The decrease in efficiency as a result of vapor superheat at the compressor suction, as shown in Figure 9, is due primarily to the decrease in vapor density, causing reduced mass flow. In addition, condenser heat rejection is increased. A reduction in superheat, while not as significant as other parameters described above, can still be important in increasing energy efficiency. All other factors constant, a 20°F reduction in superheat, for example, 40° to 20°F, can cause nearly 10 percent improvement in EER.

3.3.6 Summary

The results of the sensitivity analysis described above are summarized in Table 13. In addition, Table 13 lists several physical ways in which each theoretical improvement could be accomplished. These will be discussed further in Sections 4 and 5.

It should be pointed out that these possible improvements in EER are not additive; they are all relative to the same base condition and are independent of each other. Once one improvement is embodied in a system, the possible increase in efficiency from other improvements is diminished. Also, the improvements are not always compatible, for example, ambient subcooling implies head-pressure control, and cannot exist if the head pressure is totally free to float. Furthermore, improvement numbers are instantaneous values, and not averaged over variations

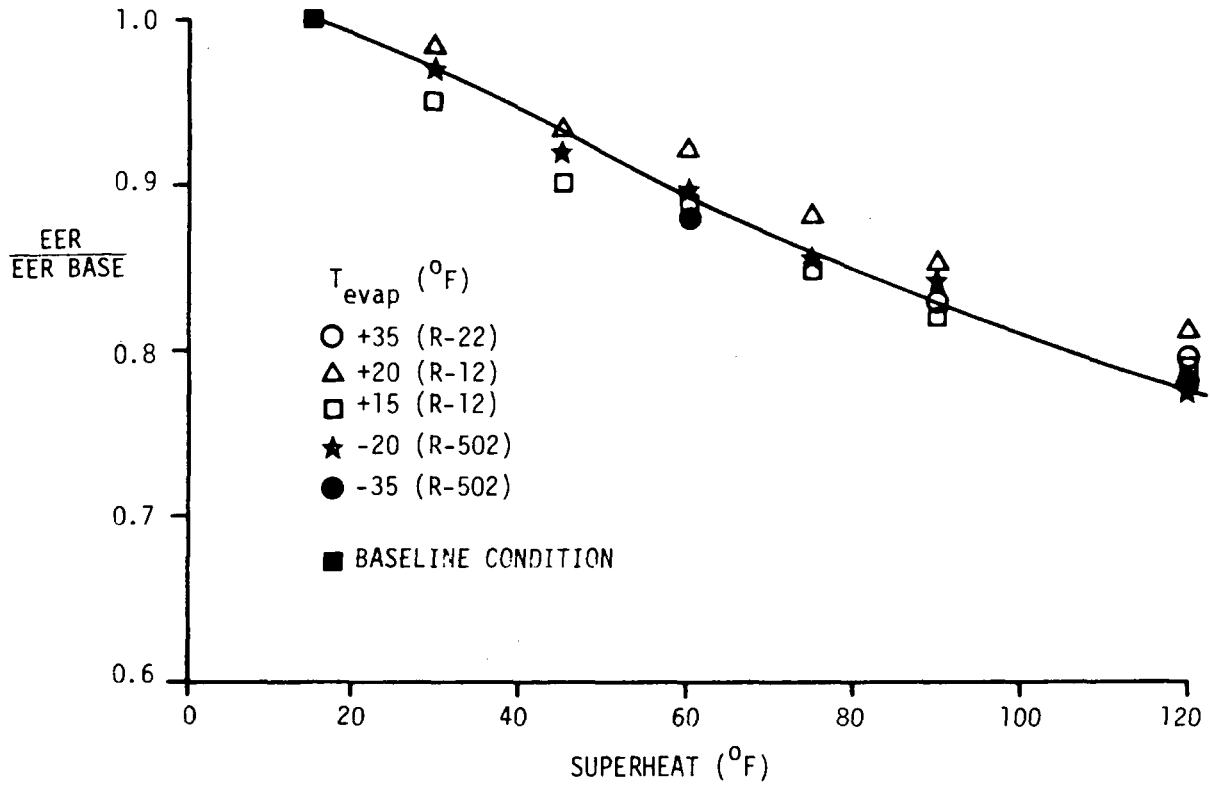

FIGURE 9. - EER ratio versus superheat at suction; T_{cond} = 90°F

in operating conditions. For example, improvements by lowering condensing pressure or increasing subcooling may be substantially lower when averaged over an annual cycle, or may vary widely with climate.

3.4 Compressor Capacity Control

While the sensitivity analysis covered most of the possible improvements to the refrigeration system operation, compressor capacity control was not analyzed, since its modeling on a computer is far from trivial. Capacity control offers higher operating efficiency because at each point of operation, the compressor capacity matches the load. In addition, a wider range of operation can be obtained from one compressor or compressor group. Although no detailed figures on overall efficiency increase with capacity control are available, estimated increases of 10 to 20 percent can be expected based on ability to take advantage of load variation over the year (9).

TABLE 13. - Summary of sensitivity study

1.	Condensing temperature - up to 100 percent improvement in EER ● Floating head pressure ● Evaporative or wet condenser ● Pressure drop reduction
2.	Subcooling - 40 to 60 percent improvement in EER ● Ambient subcooling ● Liquid suction heat exchanger ● Mechanical subcooling ● Additional subcooling coil
3.	Suction pressure - up to 20 percent improvement in EER ● Increased accuracy of controls ● Pressure drop reduction ● Duty cycling
4.	Compressor efficiency improvement - 10 to 20 percent improvement in EER ● Compressor design - reduced friction, mechanical losses ● Motor efficiency ● Volumetric efficiency improvement - capacity increase
5.	Decrease in superheat at suction - up to 10 percent improvement in EER ● Shorter line runs ● Better line insulation

Existing methods of capacity control are presented below (17).

a. Hot gas bypass - Involves passing compressor discharge gas directly to the evaporator. It is wasteful of energy and not of interest in this study.

b. Clearance volume control - Requires substantial amounts of clearance volume to achieve desired amounts of flow reduction. Adds substantially to the bulk of the compressor.

c. Speed control - Stepwise or continuously variable although efficient, are quite expensive and limited to 50 percent of rated compressor speed due to lubrication requirements.

d. Valve control - Suction valve unloaders can cause uneven stresses on the crankshaft and are used mainly for large compresors. New developments such as early suction valve closing and late suction valve closing, although potentially applicable, still require development work.

e. (Unequal) parallel compressor systems - Stepwise control depending on number of compressors and relative sizes. Require more sophisticated controls, but no compressor modification.

For purposes of this study, the unequal parallel compressor system is the most viable. While offering only stepwise control, lower limit of capacity is constrained only by the selection of the smallest compressor. Furthermore, compressor modification, causing long lead-times for development, is not required. Development of a more sophisticated control system need not take long, and can increase system efficiency as well.

4. ENERGY CONSERVATION SYSTEMS FOR SUPERMARKETS

This section presents a brief overview of energy-saving concepts and components in the supermarket industry. While most fit within the scope of the sensitivity analysis described in Section 3, there are some that do not. The first subsection classifies presently available concepts and components according to function; the remaining subsections describe the next stage and future stages in development of new concepts and components.

4.1 Categories of Present Energy-Saving Concepts and Components

4.1.1 Refrigeration System Improvements

These improvements have been made primarily by the various refrigeration manufacturers as a result of awareness of the energy situation, on the request of large stores, or in order to keep up with competition. Compressor manufacturers have contributed little. The major improvements include use of parallel compressor systems, various methods of non-electric defrost, allowing head-pressures to float somewhat, and more use of ambient subcooling and extra subcooling coils. None of these systems has been tremendously successful in the marketplace so far, with a market penetration of 10 percent at the most.

4.1.2 HVAC System Improvements

These improvements have come primarily as a result of large stores or chains doing their own energy conservation design work. These include return of cool air from case spillover directly to the air conditioning system, use of heat reclaim primarily for dehumidification reheat and space heat and also for hot water requirements, and lowering store temperatures at night. Included in this category can be lighting reduction. These improvements have been more successful than refrigeration equipment improvements; heat reclaim for space heating is becoming especially widespread.

4.1.3 Controls

Control systems can be divided into two main areas: electronic controls for refrigeration systems operation, and energy management systems for complete store operations. Electronic controls are becoming available for compressor pressure control, and case temperature control. These controls although readily available, are not yet in widespread use, and are still being upgraded and improved. As of this time, these pressure controls have been only on parallel compressor systems.

Humidity sensors are being used for monitoring both general store humidity, and local case humidity. By controlling case anti-sweat heaters with a humidity sensing control system, heater power can be cut in half. Included in this category are frost sensors used for controlling defrost operations. Again, these systems offer potentially substantial power savings, especially on electric defrost systems.

Energy management systems range from simple electronic timing systems to turn lights on and off, to complete computer-based store monitoring systems including electronic pressure, temperature, and humidity sensors tied in to the refrigeration system controls described above. The latter systems capabilities include preferential load shedding to reduce peak load demand, duty cycling, calling on various stages of heating or cooling to match demand for space conditioning, monitoring refrigeration system operation, etc. Over 300 companies offer some form of energy management systems; these include electronics, controls, and other companies, as well as the three major refrigeration manufacturers. There is a great market potential for controls, since it is envisioned that most stores will eventually install some form of energy management system.

4.1.4 Add-on Energy-Saving Devices

This category includes various forms of plastic strip curtains for doorways, walk-in coolers and even display cases. Also available are hard plastic covers and roll down flexible plastic or perforated polyester covers for night use on display cases. In addition, retrofit doors are available for open multi-deck display cases. These products are made and marketed by scattered small companies. While these companies tout the advantages of energy saved using these products, stores complain of condensation, maintenance requirements, compressor short-cycling, lack of durability, and stocking problems. Use of these products is not very widespread.

4.2 Imminent Developments of Energy-Saving Concepts and Components

As part of this study, a list of imminent and future concepts for supermarket energy savings was drawn up. Imminent concepts and components are those that are considered ripe for immediate development and commercialization. They may be based on existing systems, include new systems, or be based on known designs that are currently not used in the supermarket industry. Following is a list of these concepts and components:

a. Unequal multicompressor parallel systems
b. Evaporative condenser
c. Liquid-to-suction heat exchanger
d. Finer pressure controls

e. Floating head-pressure system
f. Case redesign for 15 percent lower load
g. Mechanical subcooling systems
h. System electronic optimization.

The first six of the systems listed above were picked for detailed analysis with regard to energy savings, manufacturability, and marketability, and will be discussed in the following chapter. Mechanical subcooling and systems optimization are discussed below.

Mechanical subcooling includes any method other than ambient temperature to subcool liquid refrigerant exiting the condenser. Various water systems could be utilized, including a water preheater. A separate refrigeration cycle operating at higher efficiency could be used to cool the main cycle refrigerant. Improvements could be made to current systems that utilize a separate flash tank and flash compressor. Still other systems could certainly be devised to obtain additional subcooling. This system concept was not considered in the following analysis because the evaluation of the many different ideas was beyond the time scope of this study, and none of the ideas really stands out as more plausible or achievable than the others.

System electronic optimization would require a store computer, a detailed software package, and substantial memory. By access to compressor operating curves, typical expected load variations, ambient conditions, and other information, operation of refrigeration systems could be optimized for energy efficiency. This concept was not analyzed in detail since other concepts such as capacity control with improved compressor units and control systems would be prerequisites for this system.

4.3 Future Energy-Saving Concepts

These longer-term ideas are necessarily general in nature. They include compressor improvements, ideas for store redesign, and alternate refrigerants and cycles.

Compressor improvements include redesign of valves and ports to reduce flow losses and minimize clearance volume (a new compressor design making these claims has just entered the market), design of valve control systems for capacity control, and use of open compressors to minimize refrigerant superheat due to motor cooling and simplify selection of motors to include possible variable speed systems. Also included in this category is the study of larger compressor systems, especially with respect to system reliability, as well as alternate compressor designs, such as screw compressors.

Store redesign would be necessary to minimize line lengths between compressor systems and cases where large heat transfer and pressure losses occur. Refrigerant inventory could be significantly reduced. Localized separate space conditioning systems could be sized to operate most efficiently in each area. Construction of the store may be altered to provide additional savings of energy.

Alternate refrigerants and cycles have not been looked at by the industry for a long time, and could offer potential energy savings at some future point. Regulations limiting use of fluorocarbon refrigerants may hasten the development of such alternatives.

5. RANK AND RATING OF ENERGY-SAVING COMPONENTS

To guide the continuation of this project or any other project in this field, a method of evaluation of different concepts was developed. Its purpose is to rank the concepts in order of desirability, in this case, for further study, development and commercialization. This section describes the evaluation criteria, addresses the meeting of these criteria by the different components and summarizes the results.

5.1 Evaluation Criteria

Criteria were divided into three main categories as shown in Table 14. With the goal of selecting a component to develop and commercialize, relative weights were assigned to the criteria on a scale of 1 to 10. The committee formed to develop the weights consisted of FMA engineers, refrigeration and manufacturing engineers and marketing representatives from Friedrich, and the technical project officer from ORNL.

Although the criteria are divided into categories such as government, manufacturer, and customer, they are ultimately all interrelated. For example, while the manufacturer is more concerned about design and tooling problems, energy savings will determine how viable the new design will be, and operating cost will determine whether the customer will really buy it. Thus, it is reemphasized that the weights are assigned with the goal of development and commercialization of a product to produce national energy savings.

Potential national energy savings was scored the highest. The potential for market penetration and the time schedule, or rapidity of development, were also scored high, with time schedule considered slightly less important. Lower scores were assigned to technical feasibility, complexity of design and manfacture, and manufacturer's tooling costs. These weights, however, are balanced by customer requirements such as costs, performance, and reliability. For example, while initial tooling costs may be high, the possibility of large market penetration may nevertheless promise low capital costs to the customer. manufacture, and manufacturer's tooling costs. These weights, licensing, and health and safety codes, while still a consideration are less important. Thus, energy savings, market penetration and operating cost emerge as the primary criteria.

5.2 Component Evaluation

To evaluate a concept or component based on the evaluation criteria, the component was assigned a score of 1 to 5 for each criterion, depending upon how well that particular criterion was met. Higher scores indicate better meeting of criteria.

TABLE 14. - Evaluation criteria and corresponding weights (scale 1 - 10)

	Evaluation criteria	Weight
Government criteria	Potential national energy savings	10
	Short time schedule for energy savings	8
	Good market penetration/growth	9
Manufacturer criteria	Technical feasibility/low risk	6
	Design simplicity/manufacturability	6
	Low tooling costs to manufacturer	6
	Institutional factors	5
Customer criteria	Improvement of system performance	8
	Low operating cost	9
	Low initial capital cost to customer	8
	Good reliability/maintainability	7

The total score is then calculated by summing the products of the component scores and the evaluation criteria weights. For example, if component A has a good potential for energy savings but a very long development time it may score 5 and 1, respectively, on the first two criteria. In the same manner, scores are assigned to the other criteria. To begin computation of the total score for component A, 5 is multiplied by 10, added to 1 multiplied by 8, and so on down the line.

Scores were assigned by the same committee which drew up the evaluation criteria weights described in the previous subsection. Sources used for this scoring were preliminary results from the FMA computer program, a manufacturing analysis performed by Friedrich and considered proprietary, and a gauging of customer attitudes and preferences developed by the Friedrich marketing department. Component scores are tabulated in Table 15.

It should be emphasized that the numbers in Table 15 are qualitative. Detailed figures for an accurate comparison of the different components on the basis of the different evaluation criteria are beyond the scope of this study. As a result, scoring is dependent to an important degree on the expertise of

TABLE 15. - Component scores on evaluation criteria (Scale 1-5)

Evaluation criteria (weight)	Components						
	Unequal parallels	Evaporative Condenser	Liquid suction HX	Pressure controls	Floating head-pressure	Case redesign	Compressor improvement
Potential national energy savings (10)	4	2	1	2	4	4	3
Short time schedule for energy savings (8)	4	4	4	3	4	1	1
Good market penetration/growth (9)	5	2	3	4	4	4	4
Technical feasibility/low risk (6)	4	5	3	3	4	3	2
Design simplicity/manufacturability (6)	4	5	4	3	4	2	3
Low tooling costs to manufacturer (6)	4	4	3	4	4	2	2
Institutional factors (5)	3	2	3	3	3	2	3
Improvement of system performance (8)	4	3	3	4	4	3	4
Low operating cost (9)	4	3	3	4	4	4	3
Low initial capital cost to customer (8)	3	3	3	3	4	2	1
Good reliability/maintainability (7)	4	4	3	4	3	4	3

the scoring committee. The numbers serve as a relative comparison of the different components investigated. A discussion of each component is presented below.

5.2.1 Unequal Multicompressor Parallel Systems

Unequal parallels offer significant energy savings by virtue of stepwise capacity control; a 4 is assigned for potential energy savings. Since the unequal parallel systems are really composed of existing compressors and newly available control systems, this component scores high on time schedule and manufacturing costs. Similarly, operating cost, system performance, and reliability will all be good. Although initial capital costs may be slightly higher, 3, there is a large market for these systems and a good potential for its penetration, hence a 5 is assigned.

5.2.2 Evaporative Condensers

While this is a readily available component that is commonly used in many condensing applications, it has not been developed for use in supermarkets, although systems have been installed in the dry Southwest. They cannot operate outdoors below freezing. Evaporative condensers offer a small improvement, less than 10 percent in energy efficiency, depending upon climate, due to the fact that the condensing temperature follows the ambient wet bulb rather than the higher dry bulb temperature. While energy savings can begin immediately, 4, since the large markets are still primarily in cold climates, market penetration and the possibility of potential energy savings is considered low, 2. Since the component is already designed and available, high scores are given to technical feasibility and manufacturing considerations, but higher noise levels and additional water systems may require additional consideration of institutional factors, hence a 2. While the initial capital costs will certainly be greater than for current systems, 3, system performance, reliability, and operating costs are expected to be good for most applications.

5.2.3 Liquid Suction Heat Exchanger

In this component, the refrigerant vapor from the evaporator in the compressor suction line is used to subcool the liquid leaving the condenser. The subcooling provides additional refrigeration effect; however, the increased superheat at the compressor suction increases compressor and condenser heat rejection and decreases mass flow. Based on preliminary results from the computer program, the net gain in efficiency is usually small, on the order of a few percent, and can even be negative. Lower temperature evaporators show better efficiency improvements than medium or high temperature systems. A benefit of the liquid suction exchanger is that it assures vapor at the compressor suction, thus preventing the possibility of damage from liquid slugging.

The dubious energy savings potential rates this heat exchanger a 1, although little development work would be needed and savings could begin in a short time. Market penetration possibilities are assigned a low 3. Technical feasibility is assigned a 3; since it is not clear that such a system could be consistently efficient, the concept would have to be proved with test data. While the design of the exchanger itself is not a problem, 4, considerations of integrating it into the system rate the tooling costs category a 3. System performance, costs, and reliability, while not exceptional, are not considered detriments, hence 3's are assigned.

5.2.4 Finer Pressure Controls

This component involves microprocessor-based electronic pressure and temperature controls which could narrow bandwidths for case temperature and compressor suction operation. Annual energy savings are considered to be in the 5 to 10 percent range, hence a 2 is assigned. While some systems are becoming available now, there are improvements in logic and system integration to be made, thus, time schedule rates a 3. The market potential is good, 4, and while some technical and design work will be required, 3's, manufacturers costs will be minimal, 4. Once the initial investment on the customer's part is made, 3, the system operating costs, performance and reliability are assumed good, 4's.

5.2.5 Floating Head-Pressure System

This system involves letting condenser pressure float with ambient temperatures, reducing compressor work and promising annual energy savings ranging from 10 to 30 percent, depending on climate; this corresponds to a rating of 4. This concept includes the development of a system of sensors and controls which can bring the system from a floating condition to a regulated condition for heat reclaim or hot gas defrost. Work on physical components such as the expansion valve may be required.

Development time for this system is not expected to be long, and the market potential is considered substantial. The sensing and control system is essentially an add-on system which will not require redesign of tooling, and the components are readily available; thus, scores of 4 are assigned to the manufacturing criteria. Similarly, optimistic estimates were obtained regarding system performance and costs; reliability was rated 3 because this system will be more complex than current refrigeration control systems.

5.2.6 Display Case Redesign for 15 Percent Load Reduction

While this component represents a significant reduction in energy consumption, and will have good market possibilities when achieved, it is assumed that substantial development will be required in order to achieve this load reduction. Detailed analysis and modeling of case heat and mass transfer rates, and substantial testing, will be necessary. As a result, a rating of 1 is assigned to time schedule, and 3 to technical feasibility. Case redesign could also involve substantial design and tooling costs to the manufacturer, 2's. This would be reflected in the initial cost to the customer, 2. On the other hand, the new design can be expected to be reliable and perform well at minimum operating cost. Health and sanitation codes must be considered in this new design.

5.2.7 Improved Compressor Design

This concept involves changes in the compressor to increase load capacity and operating efficiency, and capability for capacity control. While energy savings estimates are good, the fact remains that long development times have been, and will continue to be, required. The market penetration possibility for a new design is considered very good. Low scores are assigned to technical feasibility and tooling cost estimates. While initial costs are expected to be high, operating costs will not be unreasonable. System performance should be improved and additional maintenance or reliability factors will be about average.

5.3 Summary

Total scores for each component are obtained by summing the products of the individual criterion scores and corresponding weights, as shown in the example in Table 16. A tabulation of total scores is given in Table 17.

While scoring was discussed in the preceding subsection in terms of vertical lines, it is also helpful to look at score comparisions among the various components along horizontal lines in Table 15. The unequal parallel systems rated the highest score assigned in almost every category. Major variations among the components were found in energy savings potential, time schedule for savings, market penetration, design simplicity and manufacturability, and capital costs. While small variations in individual criterion scores could change the ranking in the middle-ranked components, Table 17 shows that the top and bottom components are firmly entrenched.

TABLE 16. - Example: total score computation for evaluation of case redesign

Evaluation Criteria	Weight × Score
Potential national energy savings	10 × 4 = 40
Short time schedule for energy savings	8 × 1 = 8
Good market penetration/growth	9 × 4 = 36
Technical feasibility/low risk	6 × 3 = 18
Design simplicity/manufacturability	6 × 2 = 12
Low tooling costs to manufacturer	6 × 2 = 12
Institutional factors	5 × 2 = 10
Improvement of system performance	8 × 3 = 24
Low operating cost	9 × 4 = 36
Low initial capital cost to customer	8 × 2 = 16
Good reliability/maintainability	7 × 4 = 28
Total score	= 240
Maximum possible score	= 410

TABLE 17. - Rank of components by total score

Component	Score
Unequal multicompressor parallel system	324
Floating head-pressure system	316
Finer pressure controls	275
Evaporative condenser	267
Liquid suction heat exchanger	240
Case redesign for 15 percent load reduction	240
Improved compressor design	219

6. CONCLUSIONS AND RECOMMENDATIONS

6.1 Conclusions

The primary conclusion from the Phase I study is that unequal parallel compressor systems, followed closely by a floating head-pressure control system, hold the best potential for substantial short-term energy conservation in the supermarket industry. The latter is of additional interest since the market study shows that a significant portion of the market for these systems exists in the cooler climates of the northern states. This study has also pointed out other energy-saving concepts that are being developed, or that will be developed in the future. Among the ones considered most interesting, although not necessarily most promising in the short-term, are an improved electronic controls system for compressor operation, improvement of display case design to reduce refrigeration load, and improvement of compressors to increase efficiencies.

The computer model has proved useful in its utilization as a comparative tool. Relative improvements of various energy-saving devices have been analyzed using the model. With additional work and careful verification, this model can serve as a basis for detailed simulation of energy consumption in an operating supermarket.

The market analysis and discussions with members of the Supermarket Advisory Committee have provided a thorough understanding of the supermarket industry. In addition, an analysis of the industry as a marketplace for energy-efficient equipment has been provided. The analysis shows, for example, that nearly 90 percent of new compressor units in 1979 were conventional units, implying average or poor energy efficiency. Since this applies only to new units, the implication is that in the industry as a whole, the number of energy-efficient units is substantially lower. While the supermarket's primary objectives will remain to increase sales and please the customer, a slowly increasing awareness of energy conservation potential is evident in the industry. This is truer of larger and chain-operated stores than small independents. Still, as this awareness increases and energy costs continue to rise, the market will expand for well-integrated and designed, cost-effective, energy-efficient components.

Further analysis and discussion have shown that refrigeration manufacturers have made various attempts to improve the efficiencies of their components. However, there has not been a coherent effort by the manufacturers, or by the industry, to carry out a detailed and complete program to study and develop alternate components having greater efficiencies. As a result, while some components may be available from some manufacturers,

and other systems from different manufacturers, there is not a complete system on the market which can include the best of current ideas of various manufacturers as well as new ideas emerging today. It should be a goal of Phases II and III of this program to develop such a system.

6.2 Recommendations

6.2.1 Proposed Phase II Work

In light of the discussion above, it is proposed that Phase II involve the design and testing of an unequal multiple compressor parallel system, which can be applied to large and small, high, medium, and low temperature units. This unit shall be designed to take advantage of the possibility of allowing the condenser pressure to float with ambient conditions, taking advantage of the large gains in efficiency possible under cool ambient temperatures. Furthermore, since it is noted in subsection 5.3 that an electronic pressure control system is ranked third, behind unequal parallel compressors and floating head-pressure, we propose that this concept be developed along with the first two. Improved electronic pressure control is a necessity to take full and proper advantage of an unequal compressor system. Thus, it is proposed that Phase II include design and testing of a fully integrated unequal parallel compressor system, with floating head-pressure capability, controlled by a microprocessor-based electronic control system.

In addition, it is proposed that a display case be analyzed and modeled in order to provide and test a new design. While the concept of display case redesign was ranked somewhat low in the evaluation procedure described in Section 5, this was due primarily to low scores in development time, and design feasibility. FMA and Friedrich believe that their combined expertise can improve those numbers. With FMA capability in heat and mass transfer analysis and computer modeling, and Friedrich experience in case design and testing and expertise in manufacturing, a careful program can hasten the development of a more energy-efficient display case.

The Supermarket Advisory Committee members have been briefed on the results and conclusions of this Phase I study. They have agreed that the systems and components for proposed design and testing in Phase II are needed and will be welcomed by the supermarket industry.

6.2.2 Further Recommendations

In addition to the proposed Phase II work, there are other areas of energy conservation that should be pursued. Designs for mechanical subcooling systems could be evaluated, complete with cost and payback calculations. New developments in

compressor design could be more actively pursued, both from the standpoint of existing compressors, and alternative types of compressors.

The computer model, begun in Phase I of this study, could be refined. A completed model could be used to provide information on interactions between space conditioning and refrigeration systems. Such information might be useful in future electronic optimization of store systems. With proper detail, the model could be used in individual supermarket design. The model could be used as a basis for various general analyses of interest to the supermarket refrigeration industry. These could include compressor sizing principles studying capacity to load ratio; optimization of heat reclaim with subcooling versus regular heating allowing floating head pressures; optimization of floating head pressures versus hot gas or other forms of defrost; and other system operating characteristics.

7. REFERENCES

1. Guide to Energy Conservation for Grocery Stores, Federal Energy Administration FEA/D-76/096, January, 1977.

2. Progressive Grocer Magazine, Progressive Grocer Marketing Guidebook, New York, 1979.

3. Commercial Refrigeration Manufacturers Association, "Summary of Commercial Shipments 1979", Washington, DC, 1980.

4. Chain Store Age Magazine, Chain Store Guide 1980: Directory of Supermarkets and Convenience Stores, New York, 1980.

5. Personal Communication from Jack Biggers, Marketing Department, Friedrich Air Conditioning and Refrigeration Company, San Antonio, TX, September,1980.

6. "32nd Annual Consumer Expenditure Study", Supermarketing, September, 1979.

7. Personal Communication from Jack Biggers, Marketing Department, Friedrich Air Conditioning and Refrigeration Company, San Antonio, TX, August, 1980.

8. Food Marketing Institute, "Facts About New Supermarkets Opened in 1978", Washington, DC, 1979.

9. Store Design Data from the Commercial Refrigeration Department, Friedrich Air Conditioning and Refrigeration Company, San Antonio, TX.

10. Food Marketing Institute, "The Food Marketing Institute Speaker, 1980", Washington, DC, 1980.

11. Personal Communication with Harold E. Fine, The Stop and Shop Companies, Boston, MA, August, 1980.

12. McQuay Group, McQuay Perfex, Inc., " 'Superpak' Supermarket Rooftop Equipment", Minneapolis, MN, 1979.

13. Personal Communication with Mel Anstine, H.E. Butt Construction, San Antonio, TX, August, 1980.

14. Food Marketing Institute, "The Food Marketing Institute Speaker, 1979, Detailed Tabulations", Washington, DC, 1979.

15. Hussman Refrigeration, Inc. "Image 80: Energy Conservation; Total Store Energy Management", Bridgeton, MO.

16. Downing, R.C. "Refrigerant Equations", American Society of Heating and Refrigeration Engineers Paper No. 2313, Montreal, Quebec, Canada, 1974.

17. Hiller, C.C., and Glicksman, L.R., "Improving Heat Pump Performance Via Compressor Capacity Control - Analysis and Test", Energy Laboratory Report No. MIT-EL 76-001, Massachusetts Institute of Technology, January, 1976.

18. Ellison, R.D., and Creswick, F.A., "A Computer Simulation of Steady State Performance of Air-to-Air Heat Pumps", Report No. ORNL/CON-16, Oak Ridge National Laboratory, March, 1978.

APPENDIX A. MODELING OF COMPRESSOR EFFICIENCIES

Volumetric efficiency η_v and overall efficiency η_{oa} are used in the program to relate theoretical compressor performance to actual compressor performance. They are defined as follows:

$$\eta_v = \frac{v_{suct}}{v_{theo}} = \frac{M \times \upsilon_{suct}}{v_{theo}} \tag{A-1}$$

$$\eta_{oa} = \eta_{is}\,\eta_m = \frac{P_{theo}}{P_{motor}} = \frac{M \times \Delta h_{is}}{P_{motor}} \tag{A-2}$$

where

v_{suct}	=	Actual volume of suction gas per unit of time
v_{theo}	=	Compressor piston displacement volume per unit of time
M	=	Mass of refrigerant circulated by the compressor per unit of time
υ_{suct}	=	Specific volume of suction gas
η_{is}	=	Isentropic efficiency
η_m	=	Motor efficiency
P_{theo}	=	Theoretical power consumption for isentropic compression
P_{motor}	=	Actual power input to motor
Δh_{is}	=	Enthalpy gain from isentropic compression

Since the refrigerating capacity of a compressor at a given suction condition is proportional to the volume flow of suction gas, the actual refrigerating capacity of a compressor can be obtained by multiplying its theoretical refrigerating capacity by the volumetric efficiency. Similarly, actual compressor power consumption can be obtained by multiplying the theoretical power consumption by the overall efficiency.

The volumetric efficiency is primarily a function of compressor design and the compression ratio. To obtain volumetric efficiencies, theoretical refrigeration capacities were calculated under ten different conditions for each of five typical

supermarket refrigeration compressors. The theoretical refrigeration capacities were compared to actual refrigeration capacities obtained from the compressor manufacturer's performance curves, and a volumetric efficiency was calculated for each condition. The data showed little variation in η_v with compressor model. Volumetric efficiencies were then plotted versus compression ratio (CR) for all the compressor models (Figure A-1). The data were found to fit the following curve:

$$\eta_v = 0.746 + 0.0154\ CR - (8.35 \times 10^{-3})CR^2 + (7.32 \times 10^{-4})CR^3 - (2.13 \times 10^{-5})CR^4 \qquad \text{(A-3)}$$

and applied to all compressor models.

The overall efficiencies were obtained by calculating theoretical power consumption for the ten conditions and five compressor models described above. The volumetric efficiency variation obtained above was used in these calculations. Because of differences in the compressor design, electric motor loads and electric motor sizes relative to the compressors, and because there is already some scatter in the volumetric efficiencies, considerable scatter is evident in overall efficiencies as

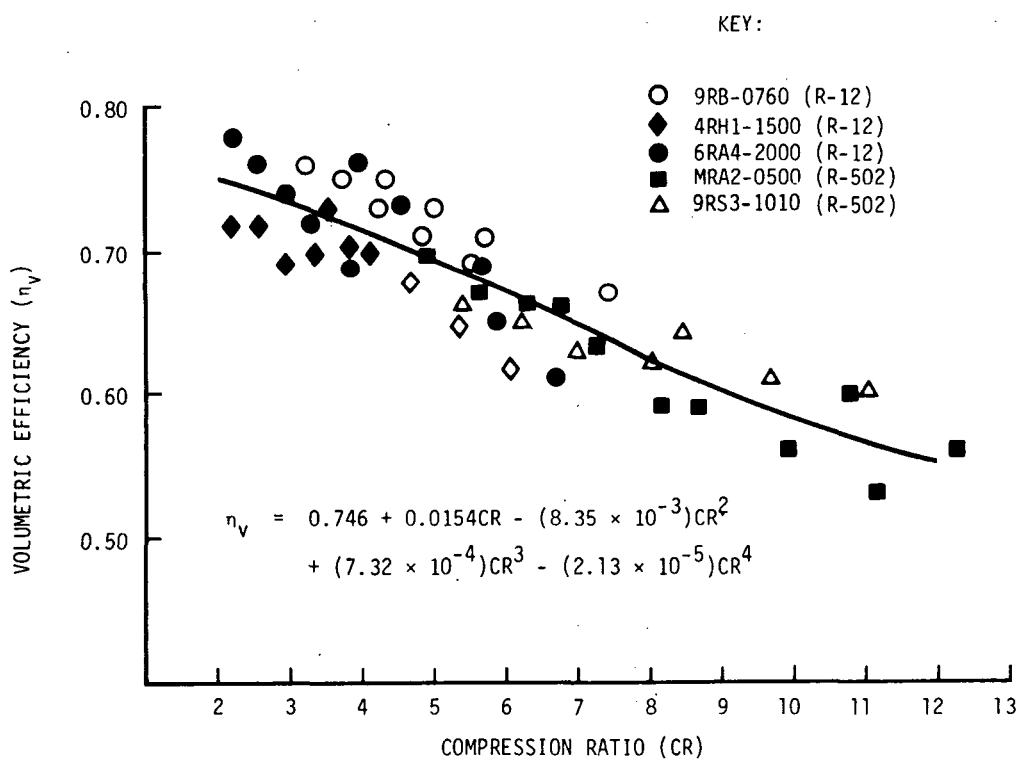

FIGURE A-1. - Curve fit of volumetric efficiency data.

a function of compression ratio (Figure A-2). Some variation in overall efficiency with compression ratio is evident for individual compressors; however, this variation was not considered substantial enough to warrant the development of efficiency curves for each compressor. A straight line showing constant η_{oa} was found to fit the data as well as any curve; for simplicity it was assumed that the overall efficiency is constant for all compressors under all conditions.

Equations describing compressor capacities and power requirements as functions of suction and discharge conditions are available from certain manufacturers for some compressor models. If more accuracy in a simulation run is necessary, and the corresponding compressor equations are available, they can easily be added to the program.

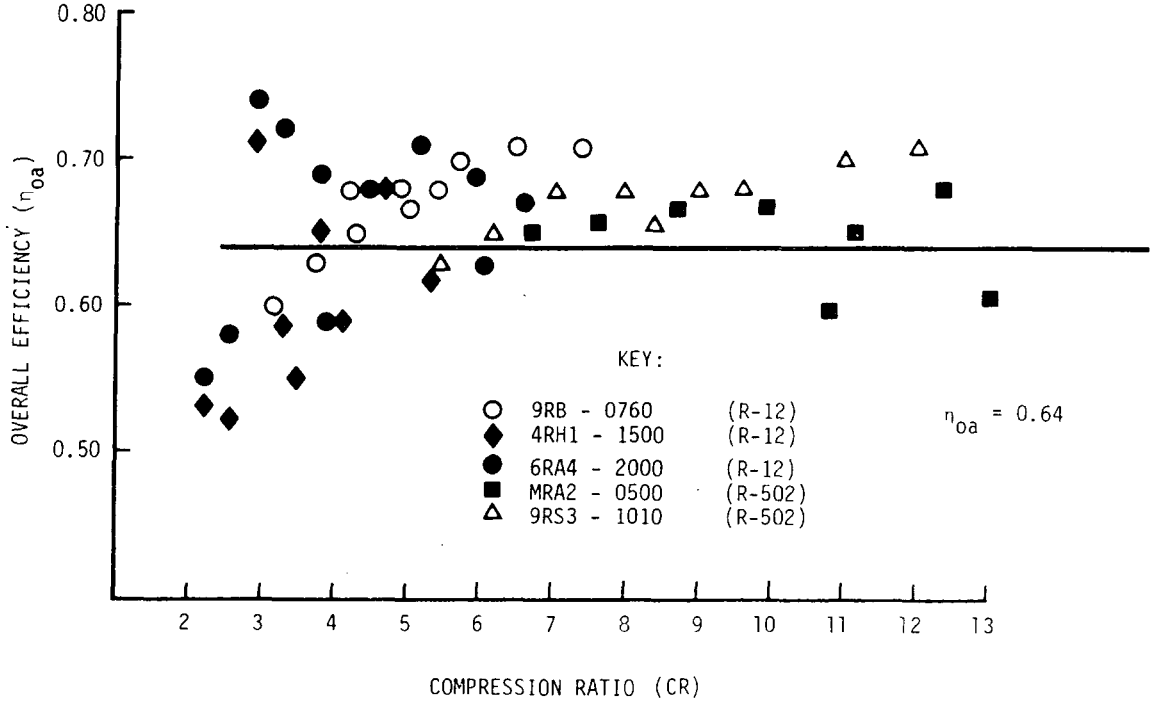

FIGURE A-2. - Curve fit of overall efficiency data.

APPENDIX B. COMPUTER MODEL FLOWCHARTS AND SAMPLE RUN

B.1 Flowcharts

Flowcharts of the main program and three primary subroutines are presented in Figures B-1 through B-4.

B.2 Program Variables

A list and description of program input variables is presented in Table B-1. Input variables for the sample program run described in the following section are tabulated in Table B-2.

B.3 Sample Program Run

Sample output from an analysis of a two-compressor and a three-compressor parallel system in Figure B-5 will serve to illustrate program operation under single- and multiple-compressor conditions, and show how the program can be used to model refrigeration power consumption in a supermarket.

This run describes a system made up of two medium temperature components: a three-compressor and a two-compressor parallel. Condenser temperature is not allowed to float below 90°F, heat reclaim, auxiliary power inputs, and pressure drops are not included. For illustration purposes, the system is run at only two ambient temperatures over a period of a year; 4000 hr at 75°F and 4760 hr at 95°F.

After the interactive input, the first output is a summary of each component at the first ambient temperature. The system totals at that ambient temperature are printed out. The same is done for the next ambient temperature. Once system performance has been calculated at each ambient temperature, the annual summaries are printed out in total and by component.

Each unit or component summary includes the following data in the printout (listed by line, left to right):

a. Component identification number

b. Evaporator temperature (°F)

c. Suction pressure (psig)

d. Evaporator load (mBtu/hr)

e. Compressor capacity or refrigeration effect (mBtu/hr)

f. Compressor running time fraction (evaporator load divided by refrigeration effect)

g. Total compressor power (kW) (instantaneous average compressor power times compressor running time)

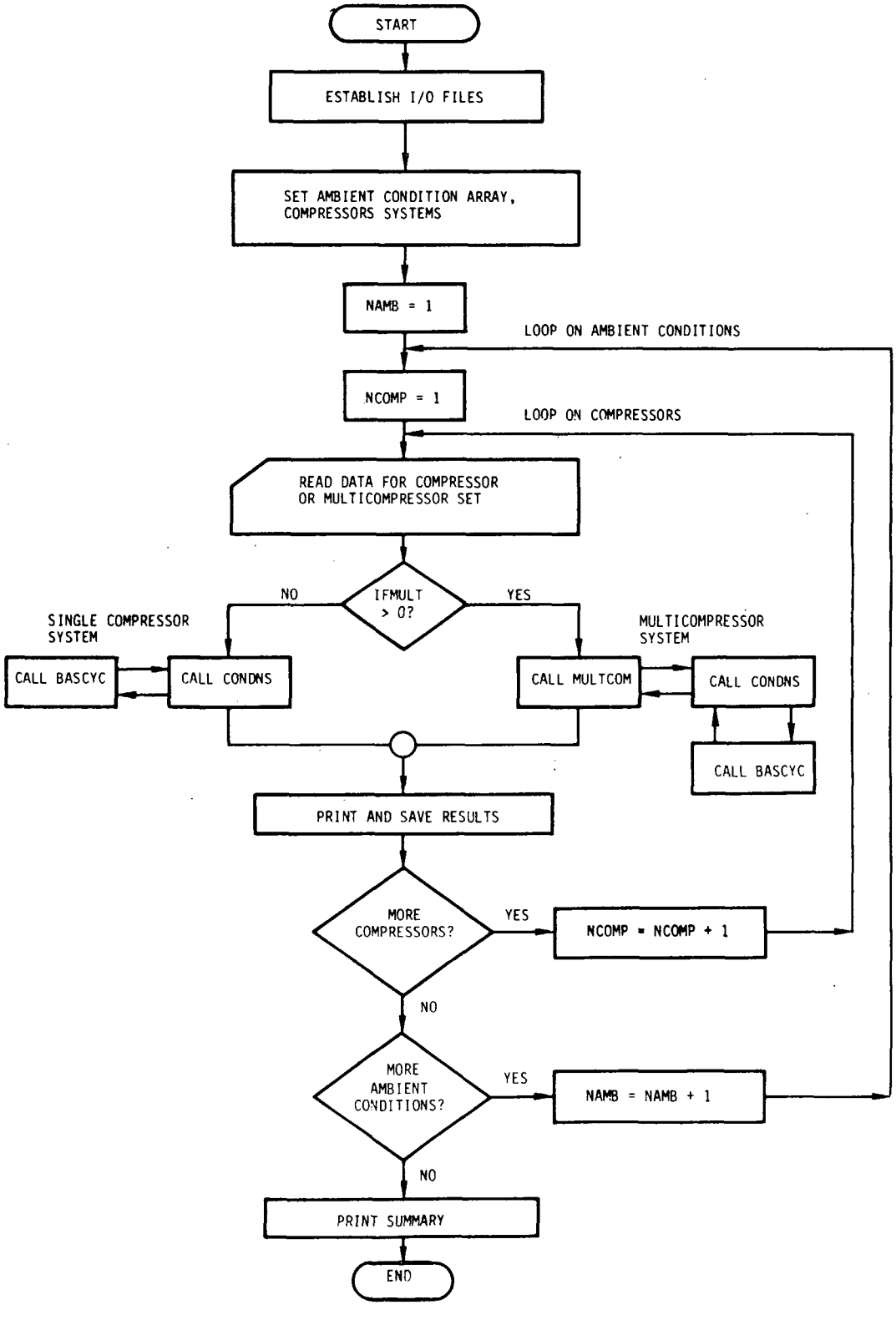

FIGURE B-1. - Flowchart for main program SUPMKT

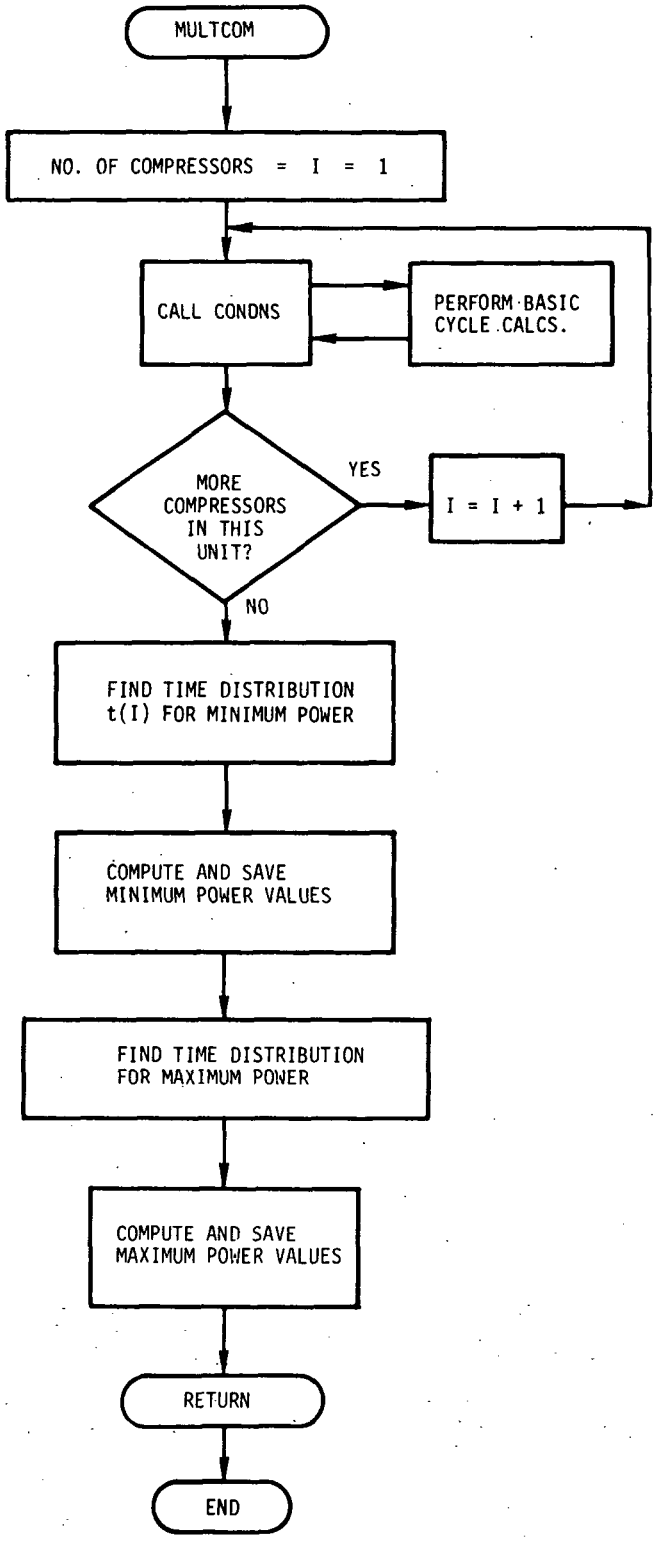

FIGURE B-2. Flowchart for subroutine MULTCOM

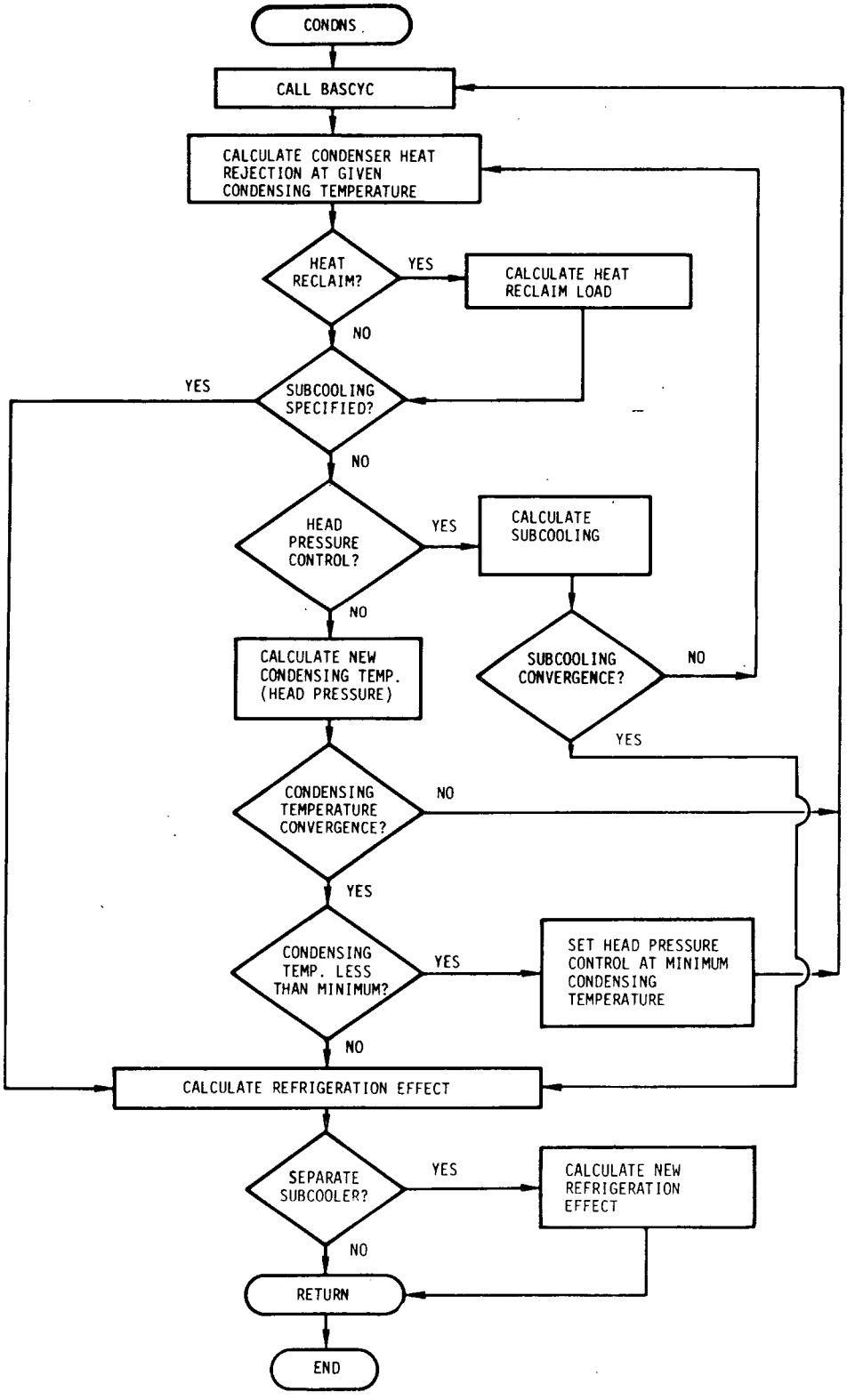

FIGURE B-3. - Flowchart for subroutine CONDNS

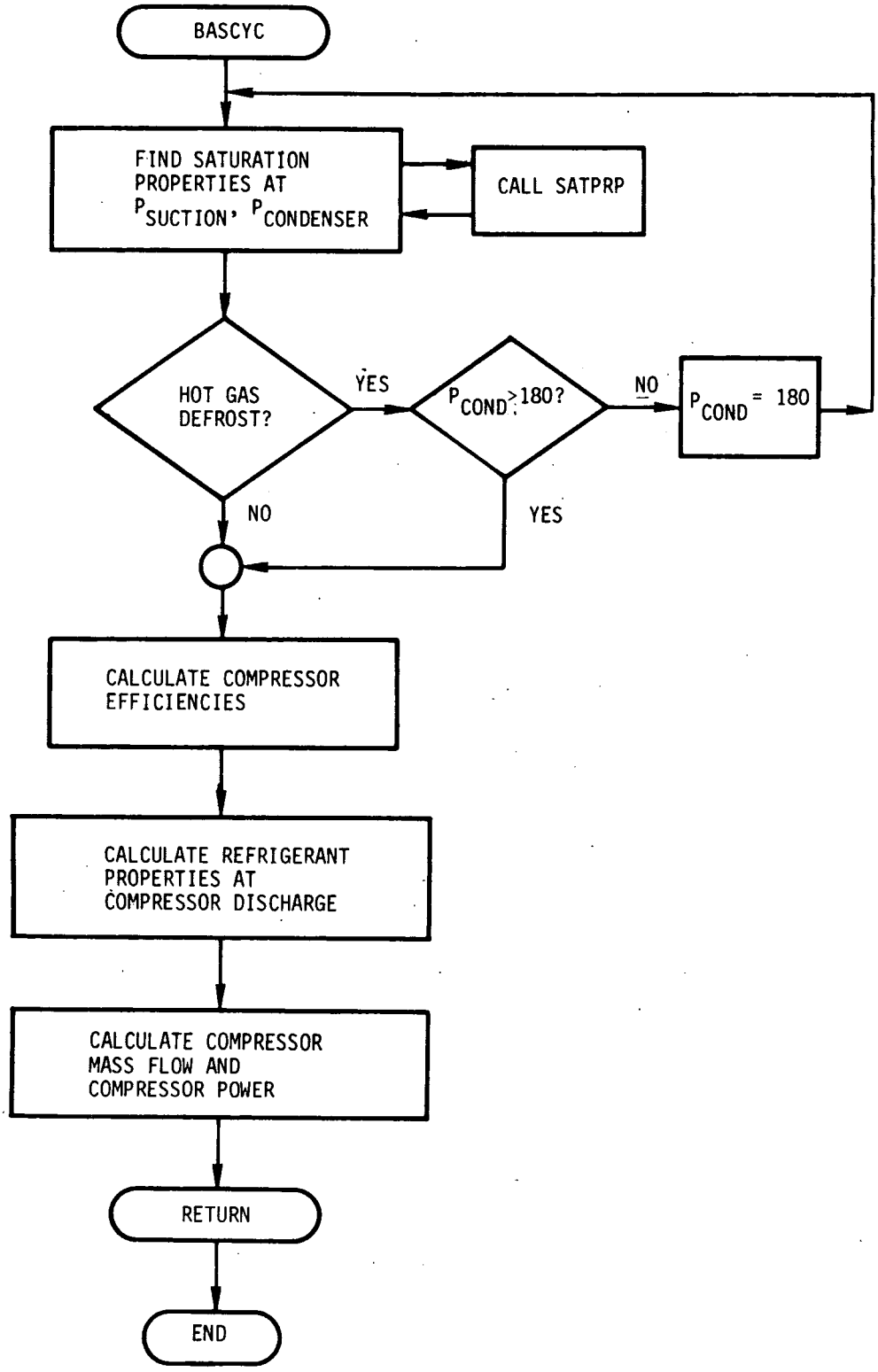

FIGURE B-4. - Flowchart for subroutine BASCYC

TABLE B-1. Program SUPMKT - input variables

ID	-	Compressor unit identification code
TEVAP	-	Design evaporator temperature
PSUCG	-	Suction pressure at compressor inlet (psig)
TCOND	-	Condenser temperature (^{o}F)
TSH	-	Superheat at compressor suction (^{o}F)
CFH	-	Compressor displacement (ft^3/hr)
NF	-	Refrigerant number (12, 22 or 502)
QCOND	-	Condenser rating at 20°F temperature difference (TD) (mBtu/hr)
QREC	-	Heat reclaim coil rating at 50°F TD (mBtu/hr)
QDES	-	Design evaporator load (mBtu/hr)
PAUX	-	Auxiliary power for compressor unit (case lights, fans, condenser fans, etc.) (kW)
IFTSC	-	Indicator = 0 under normal operation = 1 if subcooling (TSC) is specified = 2 if separate subcooler after receiver is used
TSC	-	Subcooling: condensing temperature minus temperature at expansion valve inlet (^{o}F)
IFREHT	-	Indicator = 0 if no heat reclaim = 1 if stage 1 reclaim = 2 if stage 2 reclaim
EFRH	-	Effectiveness of heat reclaim coil (not currently used)
TWRH	-	Heated medium (air or water) inlet temperature to heat reclaim coil (^{o}F)
TCOND2	-	New condenser temperature for stage 2 heat reclaim
EFSC	-	Effectiveness of separate subcooler
CPSC	-	Subcooler coolant (air or water) specific heat
SCFL	-	Subcooler coolant flow rate
TSCI	-	Subcooler coolant inlet temperature
IFMULT	-	Number of compressors operating in parallel
AUXDEF	-	Auxiliary power for electric defrost (kW)
VOLMULT	-	Multiplier for volumetric efficiency (base value = 1)
RMOTEF	-	Multiplier for motor efficiency (no longer in use)

TABLE B-1. Program SUPMKT - input variables (Continued)

TMULT	-	Multiplier for isentropic efficiency (base value = 1)
IFLOAT	-	Indicator = 0 for specified condenser temperature = 1 for floating head pressure
IFHG	-	Indicator = 0 for no hot gas defrost = 1 for hot gas defrost
TIMHG	-	Fraction of time hot gas defrost is operational
TCMIN	-	Minimum allowable condensing temperature (^{o}F)
DPSUC	-	Suction line pressure drop (lb/in^2)
DPDIS	-	Discharge line pressure drop (lb/in^2)
PMSUC(I)	-	Suction pressures for multiple parallel compressors (psig)

TABLE B-2. Input variables for sample program run

Input Variables	Component 1	Component 2
ID	1101	1102
TEVAP	15	20
PSUCG	0	0
TCOND	0	0
TSH	10	10
CFH	4530	4530
NF	12	12
QQCOND	515.9	386.93
QREC	78.0	62.35
QDES	286.85	292.71
PAUX	0	0
IFTSC	0	0
TSC	0	0
IFREHT	0	0
EFRH	0.5	0.5
TWRH	60	60
TCOND2	120	120
EFSC	0.5	0.5
CPSC	0.24	0.24
SCFL	0	0
TSCI	0	0
IFMULT	3	2
AUXDEF	0	0
VOLMULT	1	1
RMOTCF	1	1
TMULT	1	1
IFLOAT	1	1
IFHG	1	0
TIMHG	0.033	0.017
TCMIN	90	90
DPSUC	0	0
DPDIS	0	0
PSUC(I)	10,12,14	17,19,0

```
routine start at SUPMKT
ENTER 1 IF DATA IS FROM TERMINAL
2
ENTER A DESCRIPTIVE COMMENT
MED TEMP MULTI 90 F
ENTER 1 IF ALL OUTPUT TO TERMINAL
1
ENTER 1 IF TOTALS AT EACH TAMB DESIRED
1
ENTER 1 IF OUTPUT TO BE SAVED
2
ENTER 6 IF EXTRA OUTPUT TO TERMINAL,OTHERWISE ENTER 9
9
MED TEMP MULTI 90 F
ENTER NO. OF COMPR.,NO. OF TAMB S
2,2
ENTER 3 IF (TAMB,WT) TO BE READ FROM FILE, OTHERWISE ENTER 5
5
ENTER NAMB SETS OF (TAMB,WT)
75,4000,95,4760
MED TEMP MULTI 90 F


                COMPONENT SUMMARY, MBTU/HR, AT TAMB=  75.0 HR= 4000.0

  ID       T EVAP    P SUCG    EV LOAD    COMP CAP   TIME ON    COMP KW     ETAV    CR
TCOND      T SC        T SH     AUX P      DEF P     TOT P      Q REC       EER
                     MAX T REF  QCOND     COMP P      COP       DPSUC      DPDIS

 3 COMPRESSOR(S) OPERATING
 1101        15.       14.0     258.20     344.79     0.749     31.626   0.710   4.219
  94.         0.        10.       0.00       0.00     31.63      0.00      8.16
                        166.     489.53      42.23      2.43      0.00      0.00

 2 COMPRESSOR(S) OPERATING
 1101        15.       12.0     258.20     225.73     1.144     30.018   0.709   4.280
  90.         9.        10.       0.00       0.00     30.02      0.00      8.60
                        163.     315.51      26.24      2.56      0.00      0.00

 1 COMPRESSOR(S) OPERATING
 1101        15.       10.0     258.20     105.75     2.442     31.446   0.701   4.635
  90.        15.        10.       0.00       0.00     31.45      0.00      8.21
                        168.     149.76      12.88      2.44      0.00      0.00

TMIN  0.02  0.66  0.32 MINPOW   31.0925
TMAX  0.04  0.04  0.86 MAXPOW   37.8848

MED TEMP MULTI 90 F  COMPONENT SUMMARY, MBTU/HR, AT TAMB=  75.0 HR= 4000.0

  ID       T EVAP    P SUCG    EV LOAD    COMP CAP   TIME ON    COMP KW     ETAV    CR
TCOND      T SC        T SH     AUX P      DEF P     TOT P      Q REC       EER
                     MAX T REF  QCOND     COMP P      COP       DPSUC      DPDIS

 (MIN VALUES)

 1101        15.       12.6     258.20     261.43     0.988     30.708   0.701   4.273
  91.         6.        10.       0.00       0.00     30.56      0.00      8.45
                        164.     367.88      31.09      2.51      0.00      0.00

 (MAX VALUES)

 1101        15.       12.9     258.20     309.78     0.833     31.577   0.701   3.985
  88.         1.         9.       0.00       0.00     29.66      0.00      7.69
                        156.     439.61      37.38      2.29      0.00      0.00

MED TEMP MULTI 90 F
```

FIGURE B-5. Sample program output

```
                    COMPONENT SUMMARY, MBTU/HR, AT TAMB=  75.0 HR= 4000.0

  ID       T EVAP    P SUCG   EV LOAD   COMP CAP  TIME ON   COMP KW    ETAV    CR
TCOND      T SC       T SH     AUX P    DEF P     TOT P     Q REC      EER
                    MAX T REF  QCOND    COMP P    COP       DPSUC      DPDIS

 2 COMPRESSOR(S) OPERATING
 1102        20.       19.0    218.40    276.18    0.791    23.702   0.723  3.648
  95.         0.        10.      0.00      0.00    23.70     0.00     9.21
                       160.    378.75     29.97     2.74     0.00     0.00

 1 COMPRESSOR(S) OPERATING
 1102        20.       17.0    218.40    140.69    1.552    21.648   0.724  3.612
  90.        14.        10.      0.00      0.00    21.65     0.00    10.09
                       155.    188.71     13.95     3.00     0.00     0.00

TMIN  0.40  0.60  0.00 MINPOW   23.5618
TMAX  0.04  0.92  0.00 MAXPOW   28.1326

MED TEMP MULTI 90 F  COMPONENT SUMMARY, MBTU/HR, AT TAMB=  75.0 HR= 4000.0

  ID       T EVAP    P SUCG   EV LOAD   COMP CAP  TIME ON   COMP KW    ETAV    CR
TCOND      T SC       T SH     AUX P    DEF P     TOT P     Q REC      EER
                    MAX T REF  QCOND    COMP P    COP       DPSUC      DPDIS

 (MIN VALUES)

 1102        20.       18.2    218.40    221.98    0.984    23.182   0.724  3.634
  93.         5.        10.      0.00      0.00    22.86     0.00     9.56
                       158.    302.73     23.56     2.84     0.00     0.00

 (MAX VALUES)

 1102        20.       18.2    218.40    259.71    0.841    23.658   0.724  3.501
  91.         1.        10.      0.00      0.00    22.67     0.00     8.88
                       153.    356.00     28.13     2.64     0.00     0.00


MED TEMP MULTI 90 F  SYSTEM TOTALS AT TAMB=  75.0

   COMP PR   COMP CAP    CND LOAD    AUX PR     TOT PR     Q RECL     DEF PR
 (MIN VALUES)
     53.9      483.4      670.6       0.0       53.9       0.0        0.0
 (MAX VALUES)
     55.2      569.5      795.6       0.0       55.2       0.0        0.0
MED TEMP MULTI 90 F

                    COMPONENT SUMMARY, MBTU/HR, AT TAMB=  95.0 HR= 4760.0

  ID       T EVAP    P SUCG   EV LOAD   COMP CAP  TIME ON   COMP KW    ETAV    CR
TCOND      T SC       T SH     AUX P    DEF P     TOT P     Q REC      EER
                    MAX T REF  QCOND    COMP P    COP       DPSUC      DPDIS

 3 COMPRESSOR(S) OPERATING
 1101        15.       14.0    258.20    299.56    0.862    41.672   0.681  5.469
 113.         0.        10.      0.00      0.00    41.67     0.00     6.20
                       192.    464.42     49.35     1.85     0.00     0.00

 2 COMPRESSOR(S) OPERATING
 1101        15.       12.0    253.20    192.46    1.342    39.762   0.684  5.363
 106.         0.        10.      0.00      0.00    39.76     0.00     6.49
                       186.    293.81     29.64     1.93     0.00     0.00

 1 COMPRESSOR(S) OPERATING
 1101        15.       10.0    258.20     91.54    2.821    38.400   0.684  5.345
 100.         0.        10.      0.00      0.00    38.40     0.00     6.72
                       180.    138.04     13.61     2.00     0.00     0.00

TMIN  0.02  0.32  0.66 MINPOW   41.6655
TMAX  0.02  0.02  0.96 MAXPOW   47.2784

MED TEMP MULTI 90 F  COMPONENT SUMMARY, MBTU/HR, AT TAMB=  95.0 HR= 4760.0

  ID       T EVAP    P SUCG   EV LOAD   COMP CAP  TIME ON   COMP KW    ETAV    CR
TCOND      T SC       T SH     AUX P    DEF P     TOT P     Q REC      EER
                    MAX T REF  QCOND    COMP P    COP       DPSUC      DPDIS

 (MIN VALUES)

 1101        15.       13.3    258.20    261.13    0.989    41.199   0.684  5.433
 111.         0.        10.      0.00      0.00    41.00     0.00     6.30
                       190.    403.30     41.67     1.83     0.00     0.00

 (MAX VALUES)

 1101        15.       13.9    258.20    293.26    0.880    41.627   0.684  5.465
 113.         0.        10.      0.00      0.00    41.57     0.00     6.21
                       192.    454.46     47.28     1.85     0.00     0.00

MED TEMP MULTI 90 F
```

FIGURE B-5. Sample program output (Continued)

```
                    COMPONENT SUMMARY, MBTU/HR, AT TAMB=  95.0 HR= 4760.0

  ID       T EVAP    P SUCG    EV LOAD    COMP CAP   TIME ON    COMP KW     ETAV    CR
TCOND      T SC        T SH     AUX P      DEF P     TOT P      Q REC       EER
                     MAX T REF  QCOND     COMP P      COP       DPSUC      DPDIS

 2 COMPRESSOR(S) OPERATING
 1102       20.        17.0     218.40     242.35     0.901     31.657   0.699   4.707
 114.        0.         10.       0.00       0.00    31.66       0.00     6.90
                       186.     362.49      35.13     2.05       0.00     0.00

 1 COMPRESSOR(S) OPERATING
 1102       20.        17.0     218.40     120.78     1.808     28.836   0.707   4.380
 104.        0.         10.       0.00       0.00    28.84       0.00     7.57
                       176.     175.55      15.95     2.25       0.00     0.00

TMIN  0.16  0.84  0.00 MINPOW   32.0589
TMAX  0.02  0.98  0.00 MAXPOW   34.7443

MED TEMP MULTI 90 F  COMPONENT SUMMARY, MBTU/HR, AT TAMB=  95.0 HR= 4760.0

  ID       T EVAP    P SUCG    EV LOAD    COMP CAP   TIME ON    COMP KW     ETAV    CR
TCOND      T SC        T SH     AUX P      DEF P     TOT P      Q REC       EER
                     MAX T REF  QCOND     COMP P      COP       DPSUC      DPDIS

 (MIN VALUES)

 1102       20.        18.7     218.40     222.90     0.980     31.412   0.707   4.655
 112.        0.         10.       0.00       0.00    31.21       0.00     7.01
                       185.     332.58      32.06     2.09       0.00     0.00

 (MAX VALUES)

 1102       20.        19.0     218.40     239.92     0.910     31.629   0.707   4.700
 114.        0.         10.       0.00       0.00    31.60       0.00     6.91
                       186.     358.75      34.74     2.06       0.00     0.00


MED TEMP MULTI 90 F  SYSTEM TOTALS AT TAMB=  95.0

   COMP PR    COMP CAP     CND LOAD     AUX PR      TOT PR      Q RECL      DEF PR
 (MIN VALUES)
     72.6       484.0       735.9        0.0        72.6        0.0         0.0
 (MAX VALUES)
     73.3       533.2       813.2        0.0        73.3        0.0         0.0

MED TEMP MULTI 90 F  ANNUAL SUMMARY, KW-HR
   COMP PR    COMP CAP     CND LOAD     AUX PR      TOT PR      Q RECL      DEF PR
 (MIN VALUES)
 561188.6   1241601.1   1812254.0        0.0    561188.6        0.0         0.0
 (MAX VALUES)
 569632.9   4815860.5   7053404.5        0.0    569632.9        0.0         0.0

UNIT-BY-UNIT ANNUAL SUMMARY, KW-HR/KW
  ID     COMP PR      AUX PR      DEF PR      TOT PR      Q RECL       EER
 (MIN VALUES)
1101   318939.6        0.0         0.0    318939.6        0.0     63811.2
         36.409      0.000       0.000      36.409       0.000       7.284
 (MAX VALUES)
1101   324449.78       0.00        0.00   324449.78       0.00     60346.21
         37.038      0.000       0.000      37.038       0.000       6.889
 (MIN VALUES)
1102   242249.0        0.0         0.0    242249.0        0.0     71609.2
         27.654      0.000       0.000      27.654       0.000       8.175
 (MAX VALUES)
1102   245183.11       0.00        0.00   245183.11       0.00     68426.07
         27.989      0.000       0.000      27.989       0.000       7.811
ENTER 1 TO PROCESS A NEW SYSTEM
```

FIGURE B-5. Sample program output (Continued)

h. Volumetric efficiency

i. Compression ratio

j. Condensing temperature (°F)

k. Refrigerant subcooling at expansion valve (°F)

l. Refrigerant superheat at compressor suction (°F)

m. Auxiliary power (kW)

n. Defrost power (kW)

o. Total power (kW)

p. Reclaimed heat (mBtu/hr)

q. EER (compressor capacity divided by instantaneous average compressor power - Btu/Whr) temperature at compressor discharge (°F)

r. Condenser load (mBtu/hr)

s. Instantaneous average compressor power (kW)

t. Coefficient of performance

u. Suction line pressure drop (lb/in^2)

v. Discharge line pressure drop (lb/in^2).

For components with multiple compressors in parallel, performance is listed for each mode of operation, that is, three compressors, two compressors or one compressor operating. For a single compressor unit, there is only one mode of operation. As described in subsection 3.2.2.4, the program computes operating time fractions of operation in each mode for maximum and minimum power. Since the capacity of the compressor combination need only match the load to within 20 percent, the sum of the operating times can be less than 1.0 in some cases. Time fractions and corresponding power consumption are printed out, as are the time-weighted performance characteristics corresponding to the operating time fractions for maximum and minimum power.

The final section of output presents total annual power consumption for the compressors, defrosters, and auxiliaries. In addition, total annual condenser load and refrigeration effect is printed out. Power consumption information is then broken down by unit and presented both in total annual kilowatt-hours and in average kilowatts. Average annual EER is also available for each unit.

HIGHLY ENERGY-EFFICIENT SUPERMARKET SYSTEMS

Task 2 Report

SYSTEM DESIGN AND TEST PLAN

TABLE OF CONTENTS

System Design and Test Plan

Section		Page
1.	INTRODUCTION AND SUMMARY	2-1
1.1	Introduction	2-1
1.2	End Product Design	2-1
1.3	Test System Design	2-2
1.4	Test Program	2-3
1.5	Summary	2-4
2.	SYSTEM DESCRIPTION AND DESIGN CRITERIA	2-6
2.1	Description of Proposed System	2-6
2.1.1	Unequal Parallel Compressors	2-6
2.1.2	Floating Condenser Pressure	2-6
2.1.3	Microprocessor-Based Compressor Control	2-7
2.2	Design Criteria	2-7
3.	DESIGN PROCEDURE	2-9
3.1	Unequal Parallel Compressor Configuration	2-9
3.1.1	Capacity Control by Multiple Compressors	2-9
3.1.2	Optimization of Compressor Combination	2-12
3.1.3	Optimization of Number of Compressors	2-21
3.1.4	Comparison of the Three Unequal Parallel Compressor System to Conventional Supermarket Refrigeration Systems	2-39
3.2	Floating Condenser Pressure System	2-39
3.3	Compressor Capacity Control Algorithm	2-45
3.4	The Microprocessor-Based Control System	2-46
3.4.1	Comparison of Different Control Systems	2-46

TABLE OF CONTENTS (Continued)

Section		Page
3.4.2	Development Procedure for a Microprocessor-Based System	2-47
3.4.3	Design of the Microprocessor-Based System	2-47
4.	EXPERIMENTAL TEST SYSTEM DESIGN	2-57
4.1	Experimental Refrigeration System	2-57
4.2	Refrigeration Load Model	2-59
4.3	Instrumentation	2-61
5.	TEST PROGRAM	2-69
5.1	Test Program Goals	2-69
5.2	Experimental Test Plan	2-70
5.3	Data Reduction	2-73

LIST OF ILLUSTRATIONS

Figure		Page
1	Implementation of system design to prepare for test program	2-5
2	Schematic of a typical three-compressor parallel system	2-10
3	Algorithm for finding the minimum pressure band for any number of unequal compressors operating in parallel	2-15
4	Seasonal refrigeration load model	2-22
5	Calculation procedure to determine the energy consumption of a supermarket refrigeration system	2-25
6	Sensitivity analysis of life cycle savings for unequal parallel compressor systems, refrigerant = R-12, discount rate = 0.10	2-32
7	Sensitivity analysis of life cycle savings for unequal parallel compressor systems, refrigerant = R-12, discount rate = 0.15	2-33
8	Sensitivity analysis of life cycle savings for unequal parallel compressor systems, refrigerant = R-12, discount rate = 0.20	2-34
9	Sensitivity analysis of life cycle savings for unequal parallel compressor systems, refrigerant = R-502, discount rate = 0.10	2-35
10	Sensitivity analysis of life cycle savings for unequal parallel compressor systems, refrigerant = R-502, discount rate = 0.15	2-36
11	Sensitivity analysis of life cycle savings for unequal parallel compressor systems, refrigerant = R-502, discount rate - 0.20	2-37
12	McQuay Seasonmiser system	2-42
13	Detail of McQuay heat motor and pressure control valve	2-42
14	Friedrich two-compressor refrigeration system	2-44

LIST OF ILLUSTRATIONS (Continued)

Figure		Page
15	Development procedure for microprocessor-based system	2-48
16	Microprocessor development system	2-50
17	Main control program	2-51
18	Flow chart of datalogging algorithm	2-52
19	Microprocessor system configuration (see Table 10 for component description)	2-54
20	Elements of the experimental supermarket refrigeration system	2-58
21	Refrigeration load model	2-60
22	Supermarket refrigeration test system instrumentation	2-64
23	Refrigeration load instrumentation	2-65

LIST OF TABLES

Table		Page
1	Unequal parallel compressor optimization - R-12 system - best compressor capacity distribution for each number of compressors considered (compressor size expressed in horsepower)	2-17
2	Unequal parallel compressor optimization - R-502 system - best compressor capacity distribution for each number of compressors considered (compressor size expressed in horsepower)	2-18
3	Unequal parallel compressor optimization - R-12 system - lowest suction pressure band achieved by best compressor capacity distribution (suction pressure bandwidth expressed in $lb/in.^2$)	2-19
4	Unequal parallel compressor optimization - R-502 system - lowest suction pressure band achieved by best compressor capacity distribution (suction pressure bandwidth expressed in $lb/in.^2$)	2-20
5	Yearly ambient temperature distribution and corresponding supermarket refrigeration load	2-23
6	Annual energy consumption analysis for the unequal parallel compressor supermarket refrigeration system	2-26
7	Life cycle savings analysis of unequal parallel compressor refrigeration systems	2-29
8	Life cycle savings estimates of the three unequal parallel compressor systems including microprocessor-based electronic control system cost	2-40
9	Annual electrical energy consumption comparison of three unequal parallel compressor and conventional supermarket refrigeration systems	2-41

LIST OF TABLES

Table		Page
10	Unequal parallel compressor system capacity states	2-46
11	Main components of microprocessor system	2-55
12	Parameters recorded by microprocessor data acquisition system	2-67
13	Test system operating modes	2-71

1. INTRODUCTION AND SUMMARY

1.1 Introduction

This report describes the design of a new refrigeration compressor/condenser system which offers the potential for substantial energy savings in supermarket refrigeration applications. The design has been accomplished by a team of engineers from Foster-Miller Associates, Inc. (FMA), of Waltham, MA, and Friedrich Air Conditioning and Refrigeration Company (Friedrich), of San Antonio, TX. The system consists of three major components:

a. Several compressors of differing capacities piped in parallel between common suction and discharge headers

b. A condenser/receiver subsystem that can take advantage of low ambient temperatures

c. A microprocessor-based control system to optimize the system operation.

This refrigeration system was designed to fulfill two categories of design criteria. First, this refrigeration system had to satisfy requirements of a marketable end product. The system had to be compact, energy-efficient, and minimally more complex than existing systems. Second, the refrigeration system had to incorporate the flexibility of a development system about to undergo a detailed test program. The system had to allow a variety of modes of operation, detailed instrumentation, and compatibility with a data acquisition system. The refrigeration system had to be integrated into a test loop containing a simulated load model typical of that found in any supermarket.

The design of the end product system involved general parameters, such as compressor sizing and selection, type of condenser pressure control system, and type of microprocessor control system. The design of the test system involved detailed specification of components for the test program. The results of the test program will serve to detail and modify the end product design.

1.2 End Product Design

Detailed analyses were performed to describe the optimum combination of compressors in an unequal parallel arrangement. First, a system size of 35 hp was selected, based primarily on marketability considerations. A computer analysis was employed to generate the optimum combinations of two through six compressors, based on minimization of suction pressure bandwidth. Secondly, an

energy consumption model for unequal parallel compressor systems was developed. Using this model, energy consumption data for the optimum combinations were calculated, based on real annual load data. Finally, the different optimum combinations were analyzed with respect to life cycle costs. The results showed that a three-compressor system with a 1:2:4 size or capacity ratio is the optimum. A rack with 5 hp, 10 hp and 20 hp compressors was designed based on a Friedrich multiple-compressor system.

Various schemes for controlling the condenser pressure, or head pressure, were considered. It was decided that the end product design could best be served by a detailed experimental evaluation of two alternate schemes. Both the Seasonmiser® system, marketed by McQuay Perfex, Inc., and the ambient subcooling system utilized by Friedrich (and several other manufacturers) were designed into the test system.

A microprocessor system based on an Intel 8085 processor and components by Pro-Log Corporation was selected for system control and data acquisition. Various systems were evaluated for flexibility, modularity, popularity, mass production potential, cost, and documentation before the selection was made. The system is more than adequate to accommodate large amounts of data during the test phase, can be modularly reduced to a simple compressor pressure control for end product use, or can be expanded to control other parameters in the refrigeration system, such as defrost, heat reclaim, and monitor and alarm functions.

A capacity control algorithm was identified to enable optimum operation of the system while ensuring minimum compressor cycling. The algorithm was tested on a computer and is ready to be programmed into the microprocessor.

1.3 Test System Design

The components described above have been designed and integrated into a complete test system. The test system is composed of two subsystems: the refrigeration system, including compressor rack, condenser, and microprocessor controller; and the refrigeration load model, which includes a display case, a walk-in cooler, and two brine chillers. The test system can be operated either in a fixed or floating head pressure mode, and includes heat reclaim and hot gas defrost, thus effectively simulating a supermarket application. The refrigeration load can simulate applications from small, short-term load variations, to larger variations over long time periods.

The test system is completely instrumented to allow characterization of system performance, as well as performance of individual components. Both refrigeration loads and compressor power consumption will be carefully monitored so that energy

efficiency ratios (EERs) can be determined. At the same time, pressures and temperatures will be constantly measured at various points in the system to provide system monitoring capability. The majority of instruments are electronic, and measurements will automatically be recorded at regular intervals via the microprocessor data acquisition system. Analog measurements from various instruments will be connected to analog-to-digital converter (A/D) modules at the microprocessor. The digital data will then be transmitted from the microprocessor and recorded on magnetic tape for temporary storage and data reduction.

1.4 Test Program

Development of the test program played an important role in the final design of the test system. Major goals of the test program are as follows:

a. Test unequal parallel compressor system

b. Optimize capacity control algorithm

c. Evaluate floating head pressure system

d. Monitor expansion valve operation

e. Monitor system oil flow

f. Obtain general supermarket operating data.

The 5 months allocated to testing have been divided into a 20-week test period. While the first 3 weeks will be system shakedown tests, 14 weeks will be devoted to primary testing and 3 weeks to secondary testing. Primary tests will involve general tests performed under system automatic operation. Secondary tests will involve manual operation and detailed monitoring of certain parameters that may be of particular interest.

The 14 weeks of primary testing will consist mainly of determining the effect of variables in the capacity control algorithm on system operation. These variables will be varied over their respective ranges to determine optimum settings for efficient operation. Tests will be accomplished at both medium and low temperature, using R-12 and R-502 refrigerants, respectively. Test periods will be as long as 2 days to ensure that no artificial transients are present in the system, and to provide adequate defrost cycles. Data measurements will be taken as frequently as at 1-min intervals.

While primary tests are being performed to delineate the capacity control variables, complete system data will be monitored. Thus, useful data on many different components will be available during all of the testing period. In many cases, such as oil flow and expansion valve monitoring, these data will be independent of the type of test being run on the overall system.

The large amounts of data generated during the testing will be effectively managed by a data reduction computer program. This program will read the magnetic tape, transfer the data to file storage, and perform averaging calculations for parameters of interest. The program will, furthermore, via a system model, adjust all test results to base operating conditions to compensate for differences in ambient temperature and other variables among the various tests. Finally, the program will allow output of any parameter at any desired interval to enable detailed study of different parameter variations with time.

1.5 Summary

The design of a new supermarket refrigeration system has been completed. This design has been incorporated into a laboratory test system which will allow detailed testing of this design. The test system allows the modeling of supermarket operating conditions in both the refrigeration system and the refrigeration load model.

A detailed test program has been designed. The results of the test program will provide data for the modification of the existing design to provide an improved end product design.

The system design is currently being implemented; components are being assembled, and the system is being constructed. When the system has been completely assembled and debugged, it will be ready for test program implementation. The period between the end of system design and the beginning of the test program is described in Figure 1. This work is currently in progress.

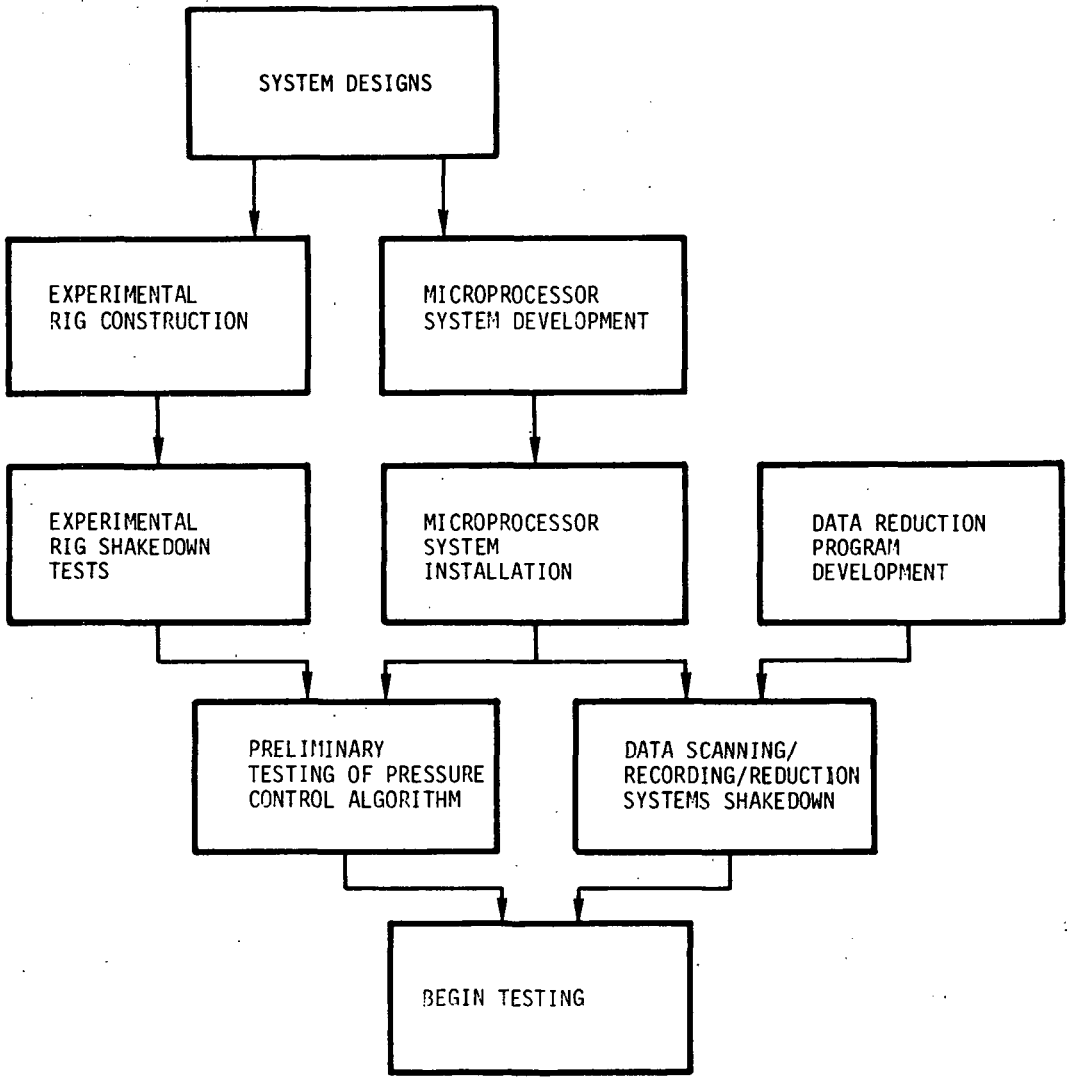

FIGURE 1. - Implementation of system design to prepare for test program.

2. SYSTEM DESCRIPTION AND DESIGN CRITERIA

2.1 Description of Proposed System

The results of the Phase I study showed that unequal parallel compressors, floating condenser pressure, and electronic or microprocessor-based suction pressure controls were the three concepts deemed most viable to pursue for development and commercialization purposes. Furthermore, it was suggested in Phase I that by combining these three concepts into a single system, the maximum performance efficiency of each of these concepts could be realized. The following subsections describe the three concepts, their advantages and possible problems in implementation, and review the design criteria.

2.1.1 Unequal Parallel Compressors

Several compressors of different capacities piped in parallel between common suction and discharge lines present a simple and inexpensive solution to the problem of compressor capacity control. This stepwise capacity control allows the system to operate at or near peak efficiency even when the operating load is less than the design load, which occurs during the majority of the operating time. Capacity control thus enables the system to take advantage of load variations due to night setback temperatures, seasonal ambient temperature variations, and defrost cycles, while maintaining the capability to satisfy high load requirements, such as those which occur during stocking, or immediately after a defrost cycle. The resultant lowering of the suction pressure bandwidth may eliminate the need for additional pressure regulators on the evaporators. Furthermore, such a compressor system can operate efficiently under significant load reductions caused by lowering the condensing temperature.

The design of an unequal parallel compressor system poses no major problems since it is an extension of the current parallel compressor systems. However, careful selection of different compressors for a given set of design criteria must be made, a compatible control system must be developed, and system operating characteristics must be determined. Potential problems such as inadequate compressor oil flow, or system sensitivity to refrigerant charge, must be addressed.

2.1.2 Floating Condenser Pressure

Since compressor efficiency is a strong function of the pressure ratio between suction and discharge, lowering the condenser pressure offers significant potential for energy savings. This is accomplished by allowing the condenser pressure to "float" with the ambient temperature rather than to be regulated at a

given pressure. Potential energy savings as high as 40 percent have been estimated in some cool climates.

The floating condenser pressure system has several major constraints. Condensed liquid must be sufficiently subcooled to prevent flashing before reaching the expansion valve. A versatile compressor system must be available to respond to the large variations in load as the condenser pressure rises and falls seasonally, or even daily. Finally, a control system must be included to allow the condenser pressure to be artificially set at the higher pressures required during hot gas defrost and secondary stage heat reclaim periods.

2.1.3 Microprocessor-Based Compressor Control

A proper solid-state pressure control can increase compressor system efficiency by reducing the suction pressure bandwidth over which the compressor operates. In a multiple compressor system, especially with unequal compressors, a microprocessor-based controller can intelligently select the proper combination of compressors to match a given load condition. Such a controller can also ensure that the compressors do not short cycle, thus improving compressor life as well as efficiency. Finally, the same microprocessor system has the potential for expansion to include defrost regulation, heat reclaim, monitoring and alarm systems, leak detection, condenser pressure control, and other functions.

Primary disadvantages of the microprocessor-based controller are its cost and its acceptance by the industry. Acceptance can be gained by demonstration of operational characteristics and energy savings. Cost will be primarily a function of the type of system and its market penetration.

2.2 Design Criteria

The design of the new refrigeration system was based on a description of a new product established by engineers and market representatives from FMA and Friedrich. This description is given in the following paragraph:

> "The system shall include a medium-sized compressor rack and a corresponding remote condenser. The rack shall consist of several parallel compressors of unequal capacities, selected to optimize system operation at various off-design load conditions. The rack shall include associated piping, valving, instrumentation and auxiliary equipment to be compatible with the typical rack of parallel compressors on the market today. A rack-mounted microprocessor-based solid state compressor control system shall be included. The control algorithm shall

be capable of matching compressor capacity to load under any conditions and regulating compressor running time sequences to maximize system operation efficiency. The condenser shall be equipped with controls to allow the condenser pressure to float with the ambient temperature only when hot gas defrost or second stage heat reclaim are not required."

In order to develop the end product described above, an extensive laboratory testing period is necessary. The operational data obtained during laboratory testing will serve to delineate the specifics of the design, modify the design as testing progresses, and, if necessary, modify the description of the end product. The compressor/condenser system designed for laboratory testing must therefore include components and satisfy criteria not included in the description of the end product. The laboratory test system must comprise the following additional capabilities:

a. Backup mechanical control system

b. Capability to evaluate floating head pressure controls, including comparison with currently-used ambient subcooling systems

c. Microprocessor flexibility to modify and expand the control algorithm

d. Complete and detailed system instrumentation

e. Data acquisition system (microprocessor-based)

f. Supermarket simulation load model, including heat reclaim and hot gas defrost capability.

The test system is necessarily broader in scope than the final product will be. Data from the operation of the test system will be used in the design of the final product. It is the test system design which will be described in the following sections.

3. DESIGN PROCEDURE

The design effort addressed four major areas, as will be described in this section. The compressor combination was optimized, floating condenser pressure systems were investigated, a compressor capacity control algorithm was identified, and a microprocessor system was designed. The design effort concentrated more on the compressor optimization and the microprocessor design, since these systems required more background development work. Investigation of the floating condenser pressure system and the capacity control algorithm can largely be accomplished during the experimental test period.

3.1 Unequal Parallel Compressor Configuration

3.1.1 Capacity Control by Multiple Compressors

The basic multiple compressor arrangement employed in a supermarket refrigeration system is depicted schematically in Figure 2. In this illustration, a set of three compressors, labeled A, B, and C, are manifolded together at the suction which is attached to a number of display cases. The discharge piping of the compressors is also manifolded together leading to the condenser. When the refrigeration load and the condensing temperature are at design value (such as during a hot summer day), all of the compressors are required to operate in order to provide enough refrigerant mass flow so that the refrigeration capacity of the system will match the refrigeration load. During off-design conditions, the capacity of the system often exceeds the refrigeration load required. This can occur when the refrigeration load from the display cases decreases because of lower store ambient temperature and lower humidity (as would occur during the winter), or when the condensing temperature of the refrigerant drops because of a decrease in the outside ambient temperature. In the latter case, the refrigeration capacity of the system is actually increased due to thermodynamic considerations affecting the operation of the system. When a mismatch of refrigeration capacity and load occur (in particular, when the capacity is greater than the load), the compressor will be forced to cycle on and off in order to supply refrigeration at the correct display case temperature. This condition is not desirable for several reasons. The cycling of the compressor does not allow the compressor to achieve optimum, steady-state operating conditions, and compressor operation is not at peak thermodynamic efficiency. When the compressor capacity is much greater than the refrigeration load, cycling will be so frequent that adequate oil flow within the compressor for lubrication cannot be established. Because of the latter problem, it is

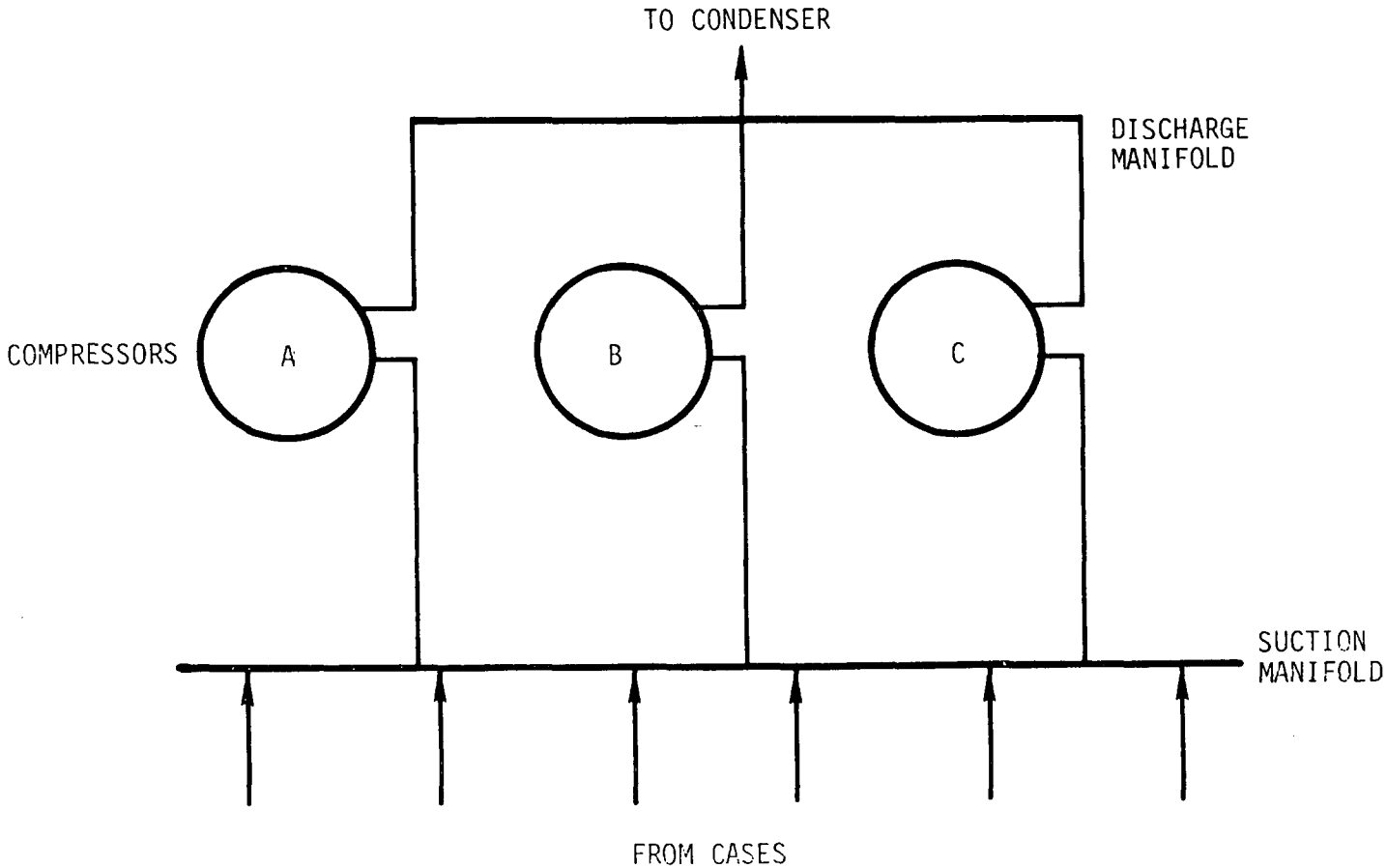

FIGURE 2. - Schematic of a typical three-compressor parallel system.

necessary to maintain operating conditions as constant as possible. Operation with a fixed condenser pressure is standard in supermarket refrigeration. Floating condenser pressure cannot be employed extensively because of the large capacity variation that will occur with its implementation.

The use of multiple compressors for capacity controls helps to better match the refrigeration capacity of the system to the refrigeration load. In a multiple compressor rack, two or more compressors are connected in parallel between common suction and discharge headers. Refrigeration systems currently on the market combine in parallel compressors of equal sizes, thus limiting the number of capacity steps to the number of compressors.

In the example given in Figure 2, if all three compressors A, B, and C, are of the same capacity, only three capacity steps are available:

- A, B, or C
- A and B, A and C, or B and C
- A and B and C.

This limited number of capacity steps does not provide fine enough control of the refrigeration system and in many instances short cycling of the compressors can still occur. The use of floating condenser head pressure is still not feasible because the large variation in system capacity cannot be controlled by multiple equal parallel compressors.

If multiple compressors of unequal capacity are employed, greater refrigeration capacity control can be achieved. If the compressors shown in Figure 2 are of unequal capacity, the number of capacity steps available is increased from three (the number in the equal capacity case) to seven. It can be shown that for any number of compressors employed, the number of capacity steps is $2^N - 1$, where N is the number of compressors of unequal capacity employed in the system. Finer capacity control can be achieved with an unequal parallel compressor system which allows for better matching of capacity to load over a large load variation. Several advantages result from this capacity control capability:

a. Continuous operation of the compressors at close-to-design conditions, ensuring highest efficiency

b. Operation of the compressors within a narrow suction pressure band, allowing the compressor to operate at a high average suction pressure

c. Finer capacity control allows the implementation of floating head pressure since the capacity of the system can be matched to the load despite capacity variation caused by the floating head pressure.

3.1.2 Optimization of Compressor Combination

Since compressors are available in a number of sizes, and since as many as six compressors could be economically connected in parallel on one rack, a large number of compressor combinations is available. The correct design of such a system requires some design analysis and an optimization. The parameters that must be optimized are:

a. The number of compressors to be employed in the system

b. The distribution of capacities among the compressors in the system.

For this optimization analysis a model of the refrigeration system is required. Certain assumptions must also be made. For the analysis, the total compressor power of the system is set at 35 hp. This is a typical size for supermarket refrigeration compressor racks. The number of compressors contained in the system will be two to six compressors. The possible compressor sizes that are currently commercially available that could be used to achieve the total 35 hp are: 1, 1.5, 2, 3, 5, 7.5, 10, 15, 20, 25 and 30 hp. It is also assumed that the refrigeration capacity of the compressor and the volume flow rate through the compressor are both directly proportional to the power input to the compressor,

$$Q \ \alpha \ HP \tag{3-1}$$

$$\text{Volume flow rate} \ \alpha \ HP$$

where

Q = the refrigeration capacity of the compressor (Btu/hr)

HP = the power input to the compressor (horsepower).

The model used to analyze capacity distribution for the unequal parallel compressors is shown schematically in Figure 3-1. The compressors are attached to a common suction manifold which

connects them to the suction lines from the display cases; in this example there are six such lines. At design conditions, when all the compressors are operating to meet the refrigeration load, a certain pressure, P_{suc}, and temperature, T_{suc}, would be expected in this manifold. The value of P_{suc} will be the operating pressure of the display case evaporators less pressure losses occurring in the suction piping. These losses will be on the order of 2 to 5 lb/in.^{2}. The suction temperature, T_{suc}, will be higher than the evaporator temperature because of superheating of the vapor as it passes through the refrigeration piping, and will typically be 20°F higher than the evaporator temperature. When the refrigeration load is exceeded by the system capacity, the suction pressure will decrease because the mass flow rate of refrigerant decreases while the compressor displacement, or volume flow rate, remains virtually constant. This results in a decrease in vapor density and a corresponding drop in suction pressure. In refrigeration systems, the suction pressure is allowed to drop until a predetermined value is attained at which time the compressor is turned off. This value of suction pressure is referred to as the cut-out pressure. The compressor remains off until the pressure rises to a second predetermined value, referred to as the cut-in pressure, when the compressor is again turned on. The cut-in and cut-out pressures define a pressure band over which the system operates.

For the case of the unequal parallel compressor system, the ability of the capacity control of the system to match the capacity to the load helps to narrow the suction pressure band over which the system operates. As the refrigeration load, and therefore the suction pressure, changes, the compressor sequence will be adjusted so that the capacity of the system will be the same or slightly greater than the required refrigeration load.

In analyzing the capacity distribution of the unequal parallel compressors, the suction pressure band over which the refrigeration system must operate will be examined. In such a system, the ability of the capacity control to match the capacity to the load determines the size of the suction pressure band. The finer the capacity control, the smaller the resulting suction pressure band will be. It follows that the capacity distribution which produces the smallest suction pressure band while operating over a large variation in refrigeration load will be the distribution that produces the best capacity control.

The variation in suction pressure caused by the mismatch between compressor capacity and refrigeration load can be determined by a mass conservation balance. In this balance, a control volume is drawn around the suction manifold. Initially the mass flow rate, $\dot{m}$, of the refrigerant will be at some value set by the refrigeration load. The density of the vapor, ρ, in the suction manifold is determined by the relation between the volume flow rate of the compressor and the mass flow rate

$$\rho = \frac{\dot{m}}{\text{volume flow rate}} \tag{3-2}$$

If the refrigeration load is reduced, the mass flow rate of refrigerant is also reduced to a smaller amount, $\dot{m}'$. A new vapor density, ρ', is established and can be determined, if it is assumed that the volume flow rate of the compressor is constant,

$$\rho' = \frac{\dot{m}'}{\text{volume flow rate}} \tag{3-3}$$

The new suction pressure, P', can be determined from thermodynamic tables for the particular refrigerant if the density and temperature of the vapor are known. The ideal gas law can also be used to establish a reasonable approximation of the suction pressure; the final expression would be

$$P' = \frac{\dot{m}'}{\text{volume flow rate}} \; R \; T_{suc} \tag{3-4}$$

where R is the gas constant for the refrigerant vapor.

For the analysis, an initial number of compressors, ranging from two to six compressors, is chosen. All of the possible capacity distributions that will give the system a total of 35 hp of compressor capacity are determined for that number of compressors. Each of these capacity distributions is then tested to determine the smallest suction pressure band required for the system to operate over a large variation in refrigeration load.

The procedure for determining the suction pressure band is outlined in Figure 3. An initial value of the suction band, ΔP, is chosen. The refrigeration load is then reduced by turning off one of the display case loads. A new suction pressure, P', is then calculated. A check is made to determine if the new suction pressure is within the pressure band. If it is, the load is reduced further and the suction pressure is again calculated until the suction pressure is no longer in the pressure band. At this point, the compressors are sequenced until the capacity meets or slightly exceeds the refrigeration load. The suction pressure is again calculated and compared to the suction pressure band. This procedure is continued until either no compressor sequence can be found that will maintain the suction pressure within the pressure band, or the number of display case refrigeration loads is reduced to one. In the latter instance,

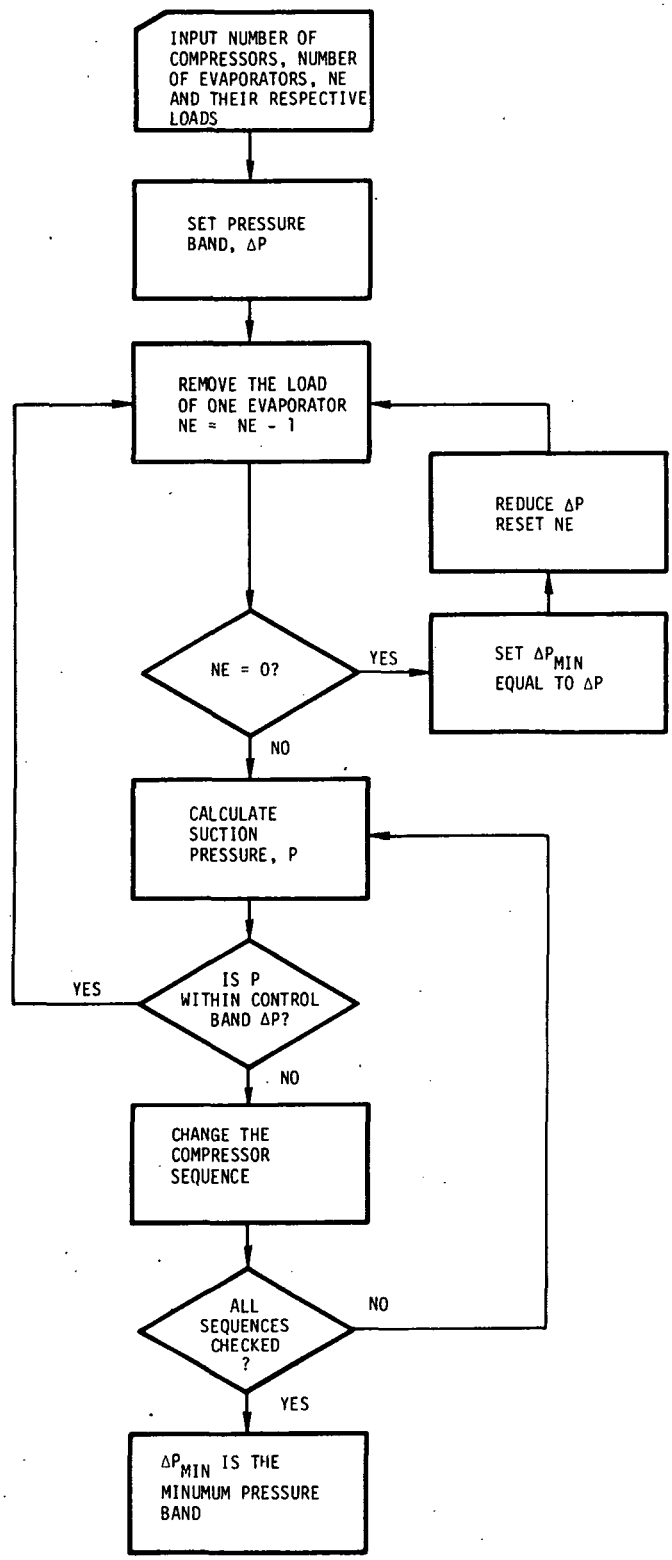

FIGURE 3. - Algorithm for finding the minimum pressure band for any number of unequal compressors operating in parallel.

the pressure band is reduced and the procedure begins again until the small pressure band over which the capacity distribution will operate is found.

The above analysis was performed for refrigeration systems operating with refrigerants R-12 and R-502. The evaporator temperature for the R-12 system was 20°F, and the evaporator temperature for the R-502 was -20°F. In both instances, the condenser temperature was fixed at 115°F. Each system was also tested against four different refrigeration load distributions which were:

a. Equally divided in six parts, that is, 16.7 percent of the load for each

b. Five parts of the refrigeration load at 16 percent each, one part of the load at 20 percent

c. Two parts of the refrigeration load at 20 percent each, four parts of the load at 15 percent each

d. Three parts of the refrigeration load at 20 percent each, two parts of the load at 15 percent each, one part of the load at 10 percent.

Tables 1 and 2 show the compressor capacity distributions which operated within the smallest suction pressure bands for each of the load conditions previously described. The results in Table 1 are for the R-12 system, while the results in Table 2 are for the R-502 system. For all of the load distributions cited and for both refrigerants, the same compressor capacity distributions provided the best capacity control. In several instances, two capacity distributions were found to give equivalent capacity control. This occurred for the four-compressor combination where the 3, 5, 7.5, and 20 hp, and the 3, 7.5, 10, and 15 hp distributions were found to perform equally well. Also, in the five-compressor combination, the 1, 2, 5, 7.5, and 20 hp, and the 2, 3, 5, 10, and 15 hp distribution provided equivalent capacity control. Further thermal evaluation showed that the 3, 7.5, 10, and 15 hp distribution was superior to the four-compressor combination while the 1, 2, 5, 7.5, and 20 hp distribution proved better for the five-compressor combination. This thermal evaluation consisted of determining the annual energy requirement for a supermarket refrigeration system. The procedure used to perform this analysis will be outlined later in this report. The suction pressure bands achieved by the best compressor capacity distributions are shown in Tables 3 and 4. The value of the pressure band shown represents the variation ($\pm\Delta P$) about an expected design suction pressure required for the system to function over the refrigeration load variation imposed on the system.

TABLE 1. - Unequal parallel compressor optimization - R-12 system - best compressor capacity distribution for each number of compressors considered (compressor size expressed in horsepower)

Number of compressors	Evaporator load distribution			
	Equally divided load (6 at 16.7% each)	1 at 20% each 5 at 16% each	2 at 20% each 4 at 15% each	3 at 20% each 2 at 15% each 1 at 10% each
2	10, 25	10, 25	10, 25	10, 25
3	5, 10, 20	5, 10, 20	5, 10, 20	5, 10, 20
4	3, 7.5, 10, 15	3, 7.5, 10, 15	3, 5, 7.5, 20	3, 5, 7.5, 20 3, 7.5, 10, 15
5	1, 2, 5, 7.5, 20	2, 3, 5, 10, 15	2, 3, 5, 10, 15	2, 3, 5, 10, 15
6	1, 1.5, 2, 3, 7.5, 20	1, 1.5, 2, 3, 7.5, 20	1, 1.5, 2, 3, 7.5, 20	1, 1.5, 2, 3, 7.5, 20

R-12

$T_{evap} = 20^{o}F$

$T_{cond} = 115^{o}F$

TABLE 2. - Unequal parallel compressor optimization - R-502 system - best compressor capacity distribution for each number of compressors considered (compressor size expressed in horsepower)

Number of compressors	Evaporator load distribution			
	Equally divided load (6 at 16.7% each)	1 at 20% each 5 at 16% each	2 at 20% each 4 at 15% each	3 at 20% each 2 at 15% each 1 at 10% each
2	10, 25	10, 25	10, 25	10, 25
3	5, 10, 20	5, 10, 20	5, 10, 20	5, 10, 20
4	3, 7.5, 10, 15	3, 5, 7.5, 20 3, 7.5, 10, 15	3, 5, 7.5, 20	3, 5, 7.5, 20 3, 7.5, 10, 15
5	1, 2, 5, 7.5, 20	1, 2, 5, 7.5, 20 2, 3, 5, 10, 15	1, 1.5, 5, 7.5, 20 2, 3, 5, 10, 15	2, 3, 5, 10, 15
6	1, 1.5, 2, 3, 7.5, 20	1, 1.5, 2, 3, 7.5, 20	1, 1.5, 2, 3, 7.5, 20	1, 1.5, 2, 3, 7.5, 20

R-502

T_{evap} = -20°F

T_{cond} = 115°F

TABLE 3. - Unequal parallel compressor optimization - R-12 system - lowest suction pressure band achieved by best compressor capacity distribution (suction pressure bandwidth expressed in lb/in.^{2})

Number of compressors	Evaporator load distribution			
	Equally divided load (6 at 16.7% each)	1 at 20% each 5 at 16% each	1 at 20% each 4 at 15% each	3 at 20% each 2 at 15% each 1 at 10% each
2	±26	±28	±36	±40
3	±17	±25	±33	±33
4	±11	±13	±11	±20
5	±8	±10	±10	±19
6	±7	±9	±10	±10

R-12

T_{evap} = 20°F

T_{cond} = 115°F

TABLE 4. - Unequal parallel compressor optimization - R-502 system - lowest suction pressure band achieved by best compressor capacity distribution (suction pressure bandwidth expressed in lb/in.2)

Number of compressors	Evaporator load distribution			
	Equally divided load (6 at 16.7% each)	1 at 20% each 5 at 16% each	1 at 20% each 4 at 15% each	3 at 20% each 2 at 15% each 1 at 10% each
2	±23	±25	±30	±38
3	±15	±22	±27	±27
4	±10	±12	±12	±16
5	±6	±10	±10	±15
6	±5	±10	±10	±7

R-502

T_{evap} = -20°F

T_{cond} = 115°F

3.1.3 Optimization of Number of Compressors

The second design parameter that must be optimized for the unequal parallel compressor system is the number of compressors employed. It was decided that the analysis to be employed for this portion of the optimization scheme would require the determination of the annual energy consumption of a supermarket refrigeration system employing a certain number of compressors in an unequal parallel arrangement. For this analysis, the number of compressors employed was varied from two to six compressors. To perform the thermal analysis, the refrigeration system model developed in Phase I of this program was used. The following additions to the model were required to perform this analysis:

a. An annual refrigeration load model was constructed.

b. The suction pressure calculation procedure used in the capacity distribution was incorporated in the thermal model.

c. The effect of floating condenser pressure on the performance of the refrigeration system was included in the analysis.

d. Economic data, such as equipment capital costs, energy costs, and calculation of life cycle cost savings, were added to the program.

The resultant program contains a complete energy consumption model as well as an economic analysis of unequal parallel compressor refrigeration systems.

3.1.3.1 Energy Consumption Model

An important consideration in the optimization analysis is the refrigeration load experienced by the refrigeration system. From conversations with several refrigeration equipment manufacturers and supermarket engineers, it was determined that the refrigeration load is dependent on several factors. The load magnitude and its annual variation are very dependent upon the particular supermarket internal configuration, number, layout, and type of display case, and HVAC system. Therefore, in order to obtain representative performance values of the unequal, parallel compressors, two refrigeration load profiles were examined. The first profile is a constant refrigeration load equal to the maximum load experienced by the refrigeration system. The second profile is a bell-shaped refrigeration load dependent upon ambient temperature. From the system analysis performed in Task 1, it was discovered that ambient temperature variation is the major contribution to the annual change in refrigeration load within a supermarket. In fact, according to the Program Advisory Committee and Friedrich, the outside ambient temperature causes the refrigeration load to vary by 50 percent or more below the maximum load during the year.

The second profile can be expressed as illustrated in Figure 4. The maximum, or design, refrigeration load will occur during the summer, when ambient temperature and humidity are the highest. The lowest refrigeration load will occur during the winter at which time the refrigeration load will be approximately 50 percent of the design load. A correlation can be made between the ambient temperature and the refrigeration load. The maximum ambient temperature that will occur will be concurrent with the design refrigeration load. Also, the minimum refrigeration load will occur when the ambient temperature is at its minimum. A linear relation can be assumed between the refrigeration load and the ambient temperature. For a given location, by knowing the ambient temperature and the number of hours this temperature occurs, the annual refrigeration load can be determined.

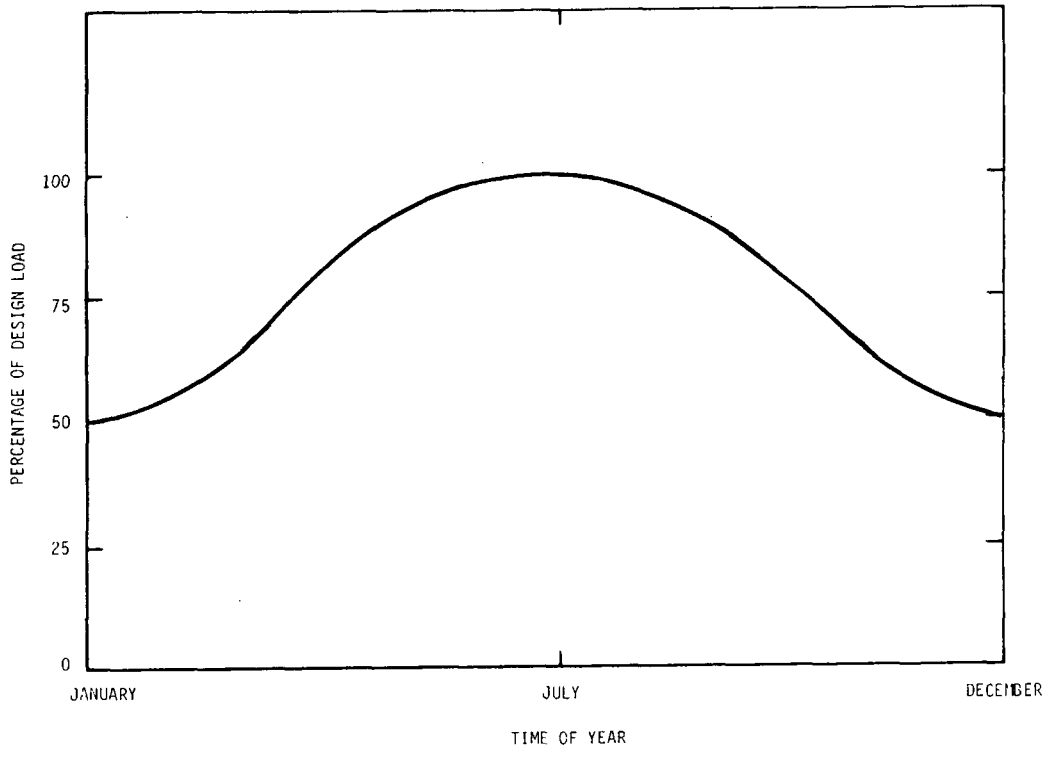

FIGURE 4. - Seasonal refrigeration load model.

For system analysis, the total capacity of the system is 35 hp. At the design conditions, a total refrigeration capacity of 166,000 Btu/hr for the R-12 system and 82,000 Btu/hr for the R-502 system is established. For the system analysis, these capacities will be the design refrigeration loads at the peak summer ambient temperature. The minimum refrigeration load is assumed to be 50 percent of the design refrigeration load and will occur at the minimum winter ambient temperature. The yearly ambient temperature distribution for a typical northern climate is shown in Table 5. Along with this temperature distribution, the calculated refrigeration loads at each ambient temperature for R-12 and R-502 are included in this table.

TABLE 5. - Yearly ambient temperature distribution and corresponding supermarket refrigeration load

Temperature (°F)	Hours of occurrence per year (hr)	Refrigeration load (Btu/hr)	
		R-12	R-502
93	62	166,000	82,000
84	442	157,000	77,000
74	1,089	147,000	73,000
67	690	140,000	69,000
62	695	135,000	66,000
55	1,140	129,000	63,000
44	982	119,000	58,000
34	1,192	107,000	53,000
25	1,123	98,000	48,000
15	694	88,000	43,000
3	551	76,000	37,000
-11	109	62,000	31,000

For the constant refrigeration load profile case, the refrigeration loads were held at the design condition value. For the R-12 system, this corresponds to a refrigeration load of 166,000 Btu/hr and for the R-502 system, this corresponds to a refrigeration load of 82,000 Btu/hr.

The model of the supermarket refrigeration system also included floating condenser head pressure. In this system, the condenser temperature is allowed to follow the ambient temperature. Considerable improvement in system energy efficiency ratio (EER) can be realized at lower ambient temperatures because the refrigeration capacity of the system is increased while the compressor work is decreased. There are certain limitations to the use of floating, condenser head pressure. The most significant is the loss in refrigeration capacity accompanying the decreased pressure drop across the thermal expansion values. Another limitation is the decrease in subcooling incurred by the liquid refrigerant leaving the condenser. A minimum amount of subcooling is required to prevent the refrigerant from flashing before it reaches the display case evaporators; this greatly reduces the capacity of the refrigeration system. The potential for refrigerant flashing increases as the ambient temperature drops. For this reason, a minimum condensing temperature should be maintained below which the system is not allowed to float. For the thermal analysis, the minimum condenser temperature was set at 65°F for the R-12 systems and at 40°F for the R-502 systems. Also, comparable minimum pressure drops between the condenser and evaporator were maintained for both R-12 systems and R-502 systems.

The procedure for determining the energy consumption of the supermarket refrigeration system is outlined in Figure 5. The ambient temperature and corresponding refrigeration load are inputs for this model. The compressor combination is chosen so that the capacity at the given ambient condition equals or exceeds the load. The suction pressure of the system is then calculated, using the procedure described in the capacity distribution analysis. Because the capacity of the compressors is affected by the suction pressure, it is necessary to check the capacity of the system at the new calculated suction pressure. An iteration is necessary for this purpose. When the capacity and the corresponding suction pressure are correct, the remainder of the cycle calculations can be completed. The power consumption of the compressors can now be determined. The energy consumption is the product of the power consumed by the system at the particular ambient temperature and the number of hours that the ambient temperature occurs annually. The energy consumption is determined for each of the ambient temperatures listed in Table 5, and the annual consumption is obtained by summing these values.

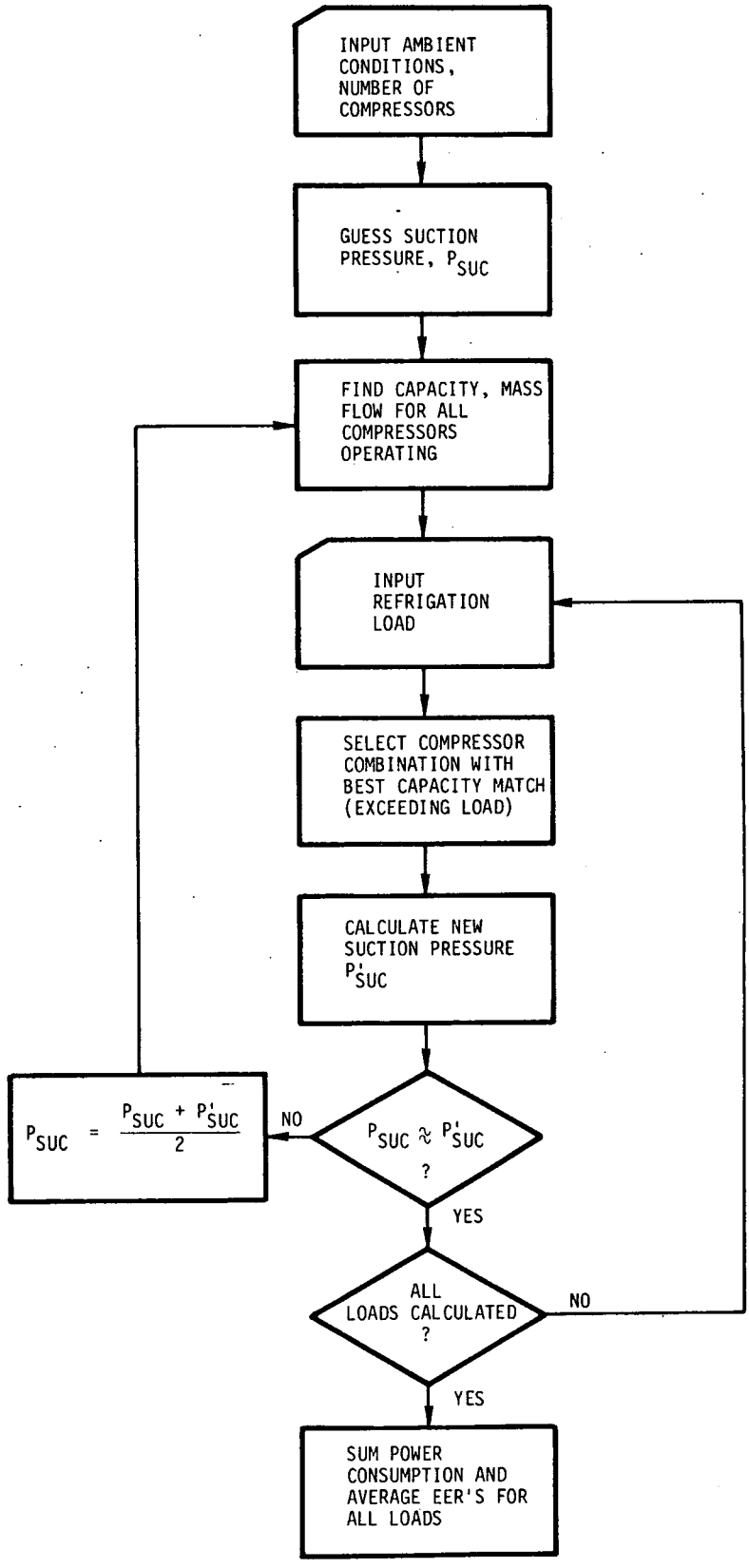

FIGURE 5. - Calculation procedure to determine the energy consumption of a supermarket refrigeration system.

The annual energy consumption was calculated for a number of unequal, parallel compressor systems. The number of compressors was varied from two to six and the annual energy consumption was found for each of these compressor combinations. For purposes of comparison, a base case was also examined which consists of three, equal capacity, parallel compressors whose combined capacity is 35 hp. The base case also included a floating, condenser pressure control with a minimum condenser temperature of 65°F. It should be noted that the base case, while not the typical refrigeration system employed in supermarkets, included the floating head pressure control so that only the effect of unequal compressor on system performance could be determined. The annual energy consumption of this base case was also determined. Annual energy consumptions for systems operating with R-12 at an evaporator temperature of 20°F and with R-502 at an evaporator temperature of -20°F were considered. The results of this annual energy consumption analysis are presented in Table 6. For both load profiles and refrigerants, the results are similar: the unequal, parallel systems consume less energy than the equal parallel system for systems of three or more compressors.

3.1.3.2 Economic Analysis

To find the optimum unequal, parallel compressor arrangement for a supermarket refrigeration system, it is necessary to perform an economic analysis. The analysis consists of determining the life cycle cost of each of the systems previously analyzed and determining which system yields the highest life cycle savings and corresponding shortest payback period. The sensitivity of these results to variances in energy cost escalation rates and discount rates must also be considered.

The life cycle cost of a supermarket refrigeration system can be determined from the following equation:

$$\text{Life Cycle Cost} = I_s - S + M_o \sum_{j=1}^{N} \left(\frac{1 + E_m}{1 + i}\right)^j + P_o \sum_{j=1}^{N} \left(\frac{1 + E_p}{1 + i}\right)^j \qquad (3\text{-}5)$$

TABLE 6. - Annual energy consumption analysis for the unequal parallel compressor supermarket refrigeration system

Annual energy consumption (10^3 kW-hr)				
Number of Compressors	Variable refrigeration load profile		Constant refrigeration load profile	
	R-12	R-502	R-12	R-502
3 equal (base case)	96.2	90.6	123.2	121.0
2	98.1	93.4	122.1	122.4
3	83.8	86.7	112.6	114.2
4	82.8	85.4	108.2	112.3
5	81.0	84.0	104.2	111.6
6	79.5	83.9	103.6	110.8

For R-12 systems - Evaporator temperature = $20^{\circ}F$
Minimum condenser temperature = $65^{\circ}F$
For R-502 systems - Evaporator temperature = $-20^{\circ}F$
Minimum condenser temperature = $40^{\circ}F$

where

I_s = the initial system cost

S = the salvage value of the system at time N

M_o = the annual maintenance cost

P_o = the annual cost of electrical energy

N = the useful life of the system in years

E_m = the annual escalation rate of the maintenance cost

E_p = the annual escalation rate of the electrical energy cost

i = the discount rate.

This expression can be simplified by considering a life cycle savings which is defined as the difference in life cycle costs between a base case system and the system being considered:

$$\text{Life Cycle Savings} = (\text{Life Cycle Cost})_{\text{Base}} - (\text{Life Cycle Cost})_{\text{Unequal}} \quad (3\text{-}6)$$

If the salvage values and the maintenance costs are assumed to be the same for all systems considered, the expression for the life cycle savings reduces to:

$$\text{Life Cycle Savings} = \Delta I_s + \Delta P_o \sum_{j=1}^{N} \left(\frac{1 + E_p}{1 + i}\right)^j \quad (3\text{-}7)$$

where

ΔI_s = the initial cost difference between the base case and the system being examined.

The initial cost of each of the unequal parallel compressor refrigeration systems must be determined. The initial cost of the system can be divided into two components: the cost of the compressors, and the cost of the rack and peripheral equipment associated with the compressors.

The rack cost also represents the cost of assembling the system. The cost of the compressors was determined by plotting the cost of various sizes of compressors obtained from Friedrich against the horsepower-input of each compressor. By using a log-log plot, the following compressor cost equation can be derived:

$$\text{Compressor Cost (\$)} = 118.8\ (\text{Horsepower})^{0.67}. \quad (3\text{-}8)$$

The rack cost was derived from several system quotations from Friedrich. From these quotations, the cost of the compressors was subtracted and the remaining cost was plotted against the number of compressors employed in the system. The resulting rack cost equation is:

$$\text{Rack Cost (\$)} = 1218\ (\text{Number of Compressors}) + 6726. \quad (3\text{-}9)$$

To determine the life cycle savings for the unequal parallel compressor systems being considered, the following assumptions were made:

a. The useful life of the system is 15 years

b. The annual electrical energy cost escalation rate (E_p) is 8 percent

c. The discount rate (i) is 10 percent.

The life cycle savings were then calculated for the R-12 and the R-502 refrigerant systems using these assumptions and the results of the thermal analysis previously presented. The life cycle savings for the unequal parallel compressor systems are shown in Table 7.

The initial system cost, life cycle savings, and payback period for each of the unequal parallel compressor systems considered in the analysis are presented in Table 7. The life cycle savings were determined by comparing the life cycle costs of the system being considered with a base case system, which is a three-equal-compressor system. The payback period shown in Table 7 is the time period required for the life cycle savings to be equal to the difference in the initial cost between the system being considered and the base case system.

The analysis showed that for both the R-12 and R-502 refrigerants, the greatest life cycle savings are obtained with an unequal parallel compressor system employing three compressors for 3 of the 4 cases examined. The 3 unequal, parallel compressor system did not produce the lowest life cycle cost savings for the case of the R-12 system with a constant refrigeration load profile. It was also found for this particular system that the initial cost of the system was the same as the base case, so that no payback is required. In general, the savings obtained by the unequal parallel systems were smaller for the R-502 refrigerant than the R-12 refrigerant. This can be explained by examining the operating pressure over which both systems are operating. The R-12 refrigerant system, when operating between an evaporator temperature of 20°F and a condensing temperature of 100°F, will have a compression ratio of 3.7, whereas the R-502 refrigerant system, operating between a -20°F evaporator and a 100°F condenser, will have a compression ratio of 7.6. The unequal parallel compressor system provides energy savings through better

TABLE 7. - Life cycle savings analysis of unequal parallel compressor refrigeration systems

Number of compressors	Initial system cost ($)	Variable refrigeration load profile				Constant refrigeration load profile			
		Life cycle savings ($)		Payback (years)		Life cycle savings ($)		Payback (years)	
		R-12	R-502	R-12	R-502	R-12	R-502	R-12	R-502
3 equal (base case)	12,200	-	-	-	-	-	-	-	-
2	10,700	250	(361)	N/A	N/A	2,199	575	N/A	N/A
3	12,200	8,114	2,567	0	0	6,945	4,477	0	0
4	13,500	7,400	2,056	2	5	8,436	4,343	1	3
5	14,800	7,320	1,707	3	8	9,788	3,552	3	6
6	16,100	6,990	1,232	5	10	8,872	2,765	4	8

Assumptions for analysis:

a. System useful life = 15 years

b. Initial electrical energy cost = $0.05/kW-hr

c. Annual electrical energy cost escalation rate = 0.08

d. Discount rate = 0.10

capacity control achieved by the highest possible suction pressure. By operating at this high suction pressure, the compression ratio is somewhat reduced, providing better compressor efficiency. The amount by which this effect will reduce the overall energy consumption of the system will depend greatly on the overall pressure ratio over which the refrigeration system operates, and, in general, the higher the pressure ratio is, the less significant are the energy savings achieved by capacity control.

3.1.3.3 Economic Sensitivity Analysis

In the analysis described above, it was found that the unequal parallel compressor system with three compressors was the economic optimum supermarket refrigeration system. For this particular example certain fixed conditions were selected. To complete the analysis it is therefore necessary to consider the effect of varying economic conditions on this optimum choice. In particular, upon examining the life cycle cost equation, it can be seen that the influence of two parameters in the equation should be examined.

a. The escalation rate of the electrical energy cost

b. The discount rate.

The thermal and economic analyses previously described were repeated and life cycle savings were determined for the unequal parallel compressor system while varying the energy escalation rate from 5 to 35 percent and the discount rate from 5 to 20 percent. Life cycle savings were calculated for a system useful life of 15 years. An initial electrical energy cost of $0.05/kW-hr was employed. The analysis was performed for both R-12 and R-502 refrigerant systems with a variable refrigeration load profile.

The results of this analysis are presented in Figures 6 through 8 for the R-12 refrigerant system and in Figures 9 through 11 for the R-502 refrigerant system. Presented in each of these figures is a plot of life cycle savings versus energy escalation rate. A plot for each number of compressors from 2 to 6 is also shown. Three discount rates, 10, 15, and 20 percent, are considered for each refrigerant case.

In general, the life cycle savings of the two-compressor system decreases as the energy escalation rate increases. This occurs because the two-compressor system consumes more energy annually than the three-equal-compressor base case. Although the two-compressor system has a lower initial cost for increasing electrical energy escalation rates, the life cycle savings are not large enough to justify the initial capital cost.

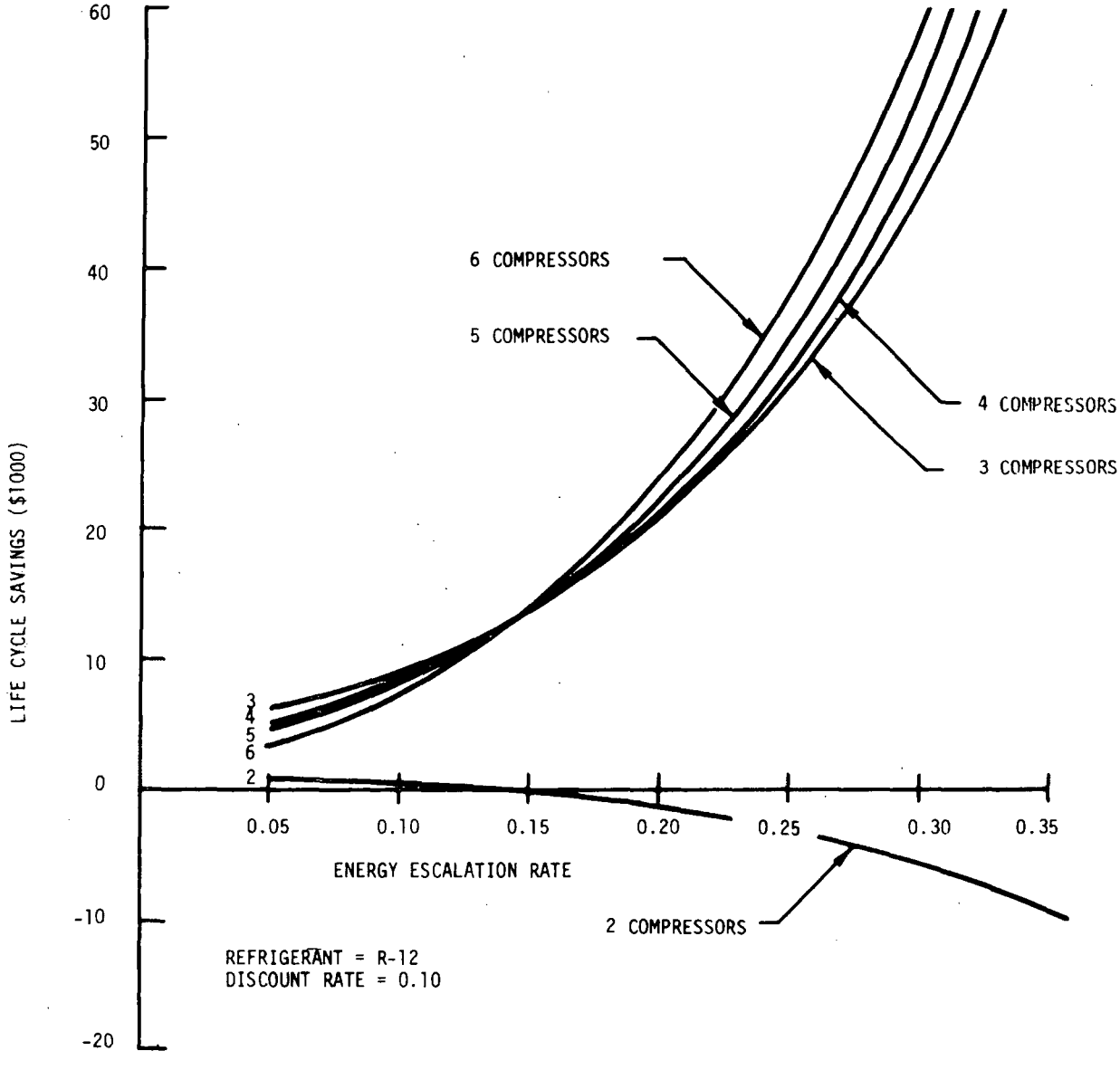

FIGURE 6. - Sensitivity analysis of life cycle savings for unequal parallel compressor systems, refrigerant = R-12, discount rate = 0.10.

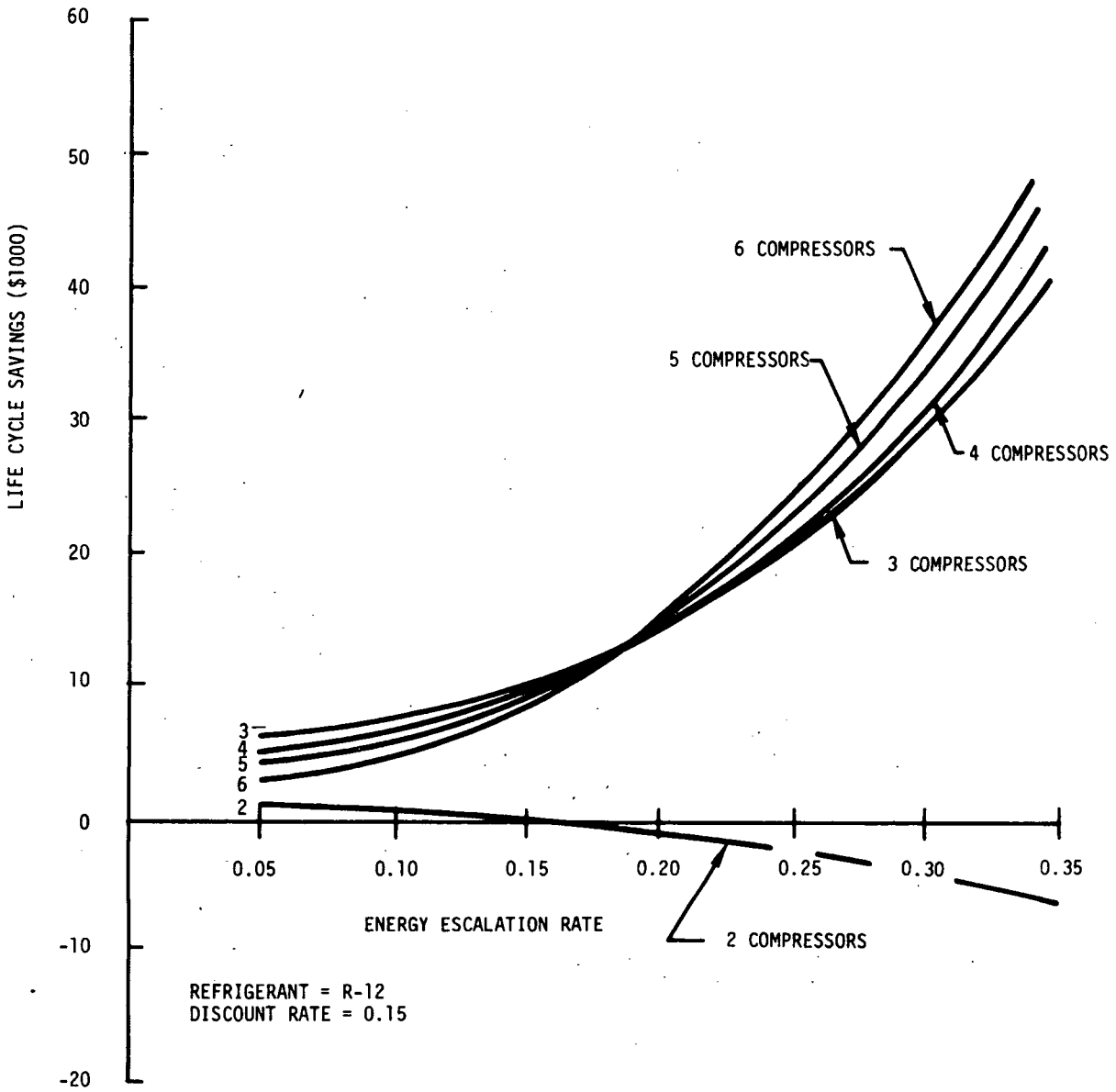

FIGURE 7. - Sensitivity analysis of life cycle savings for unequal parallel compressor systems, refrigerant = R-12, discount rate = 0.15.

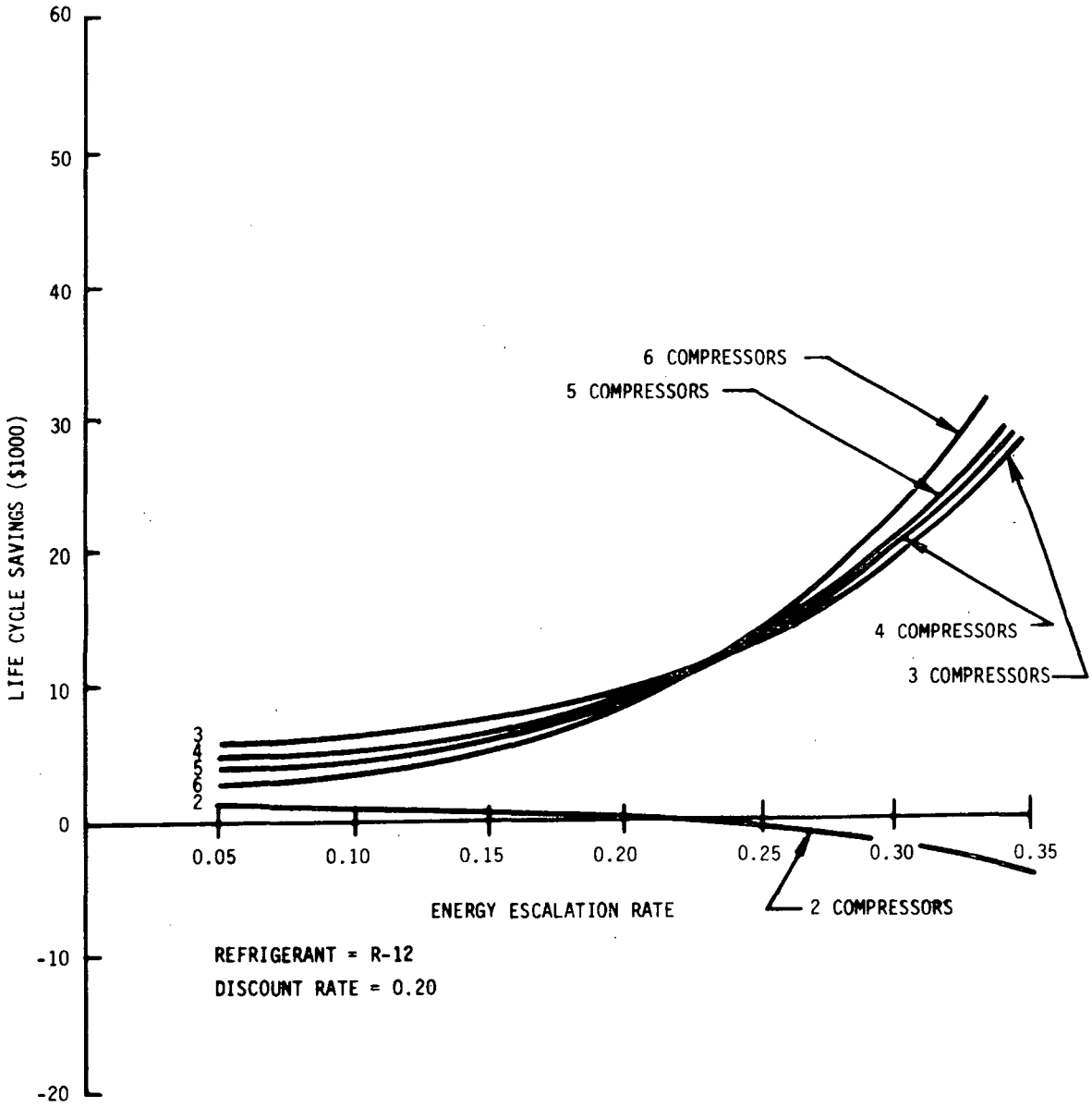

FIGURE 8. - Sensitivity analysis of life cycle savings for unequal parallel compressor systems, refrigerant = R-12, discount rate = 0.20.

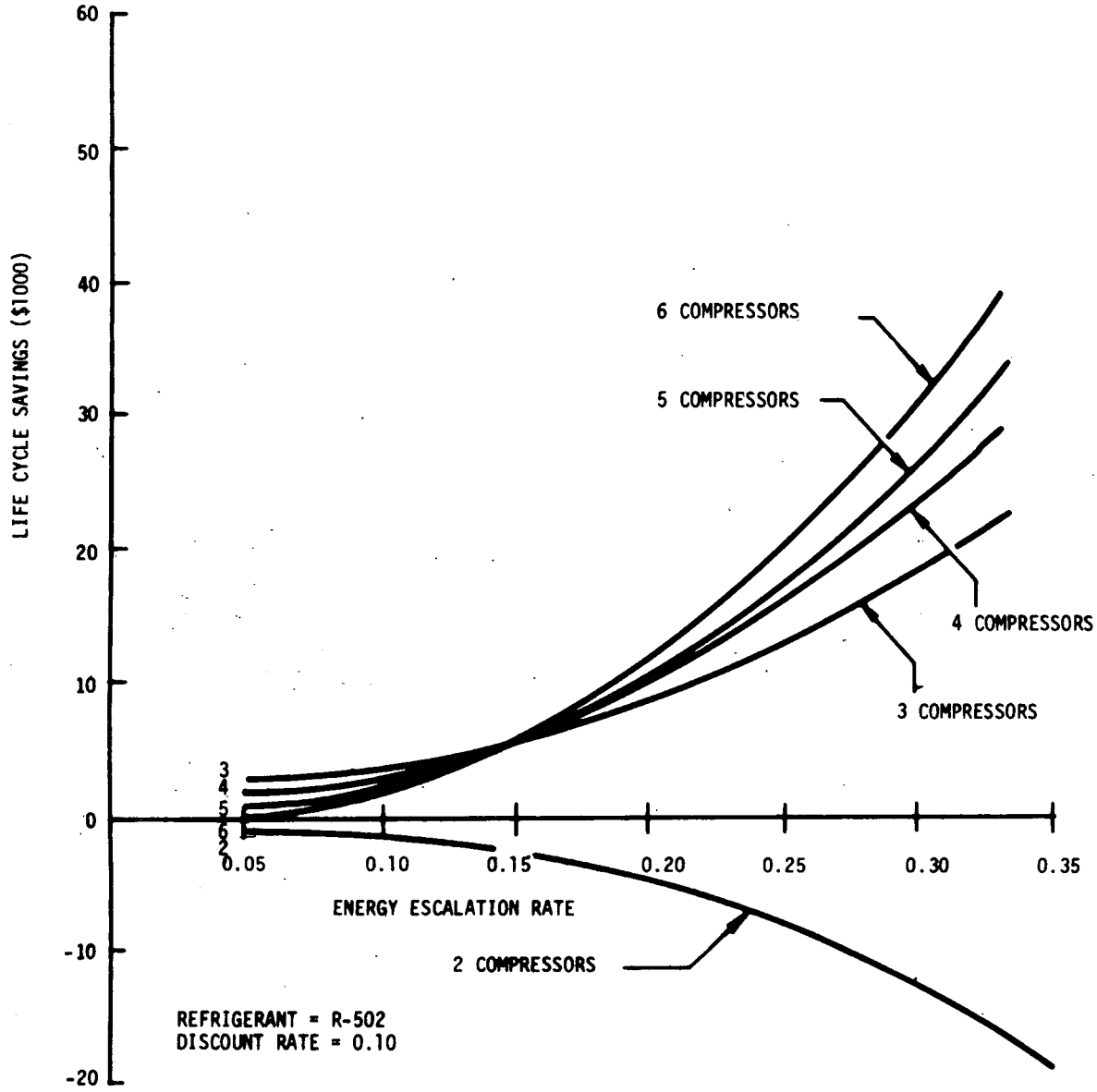

FIGURE 9. - Sensitivity analysis of life cycle savings for unequal parallel compressor systems, refrigerant = R-502, discount rate = 0.10.

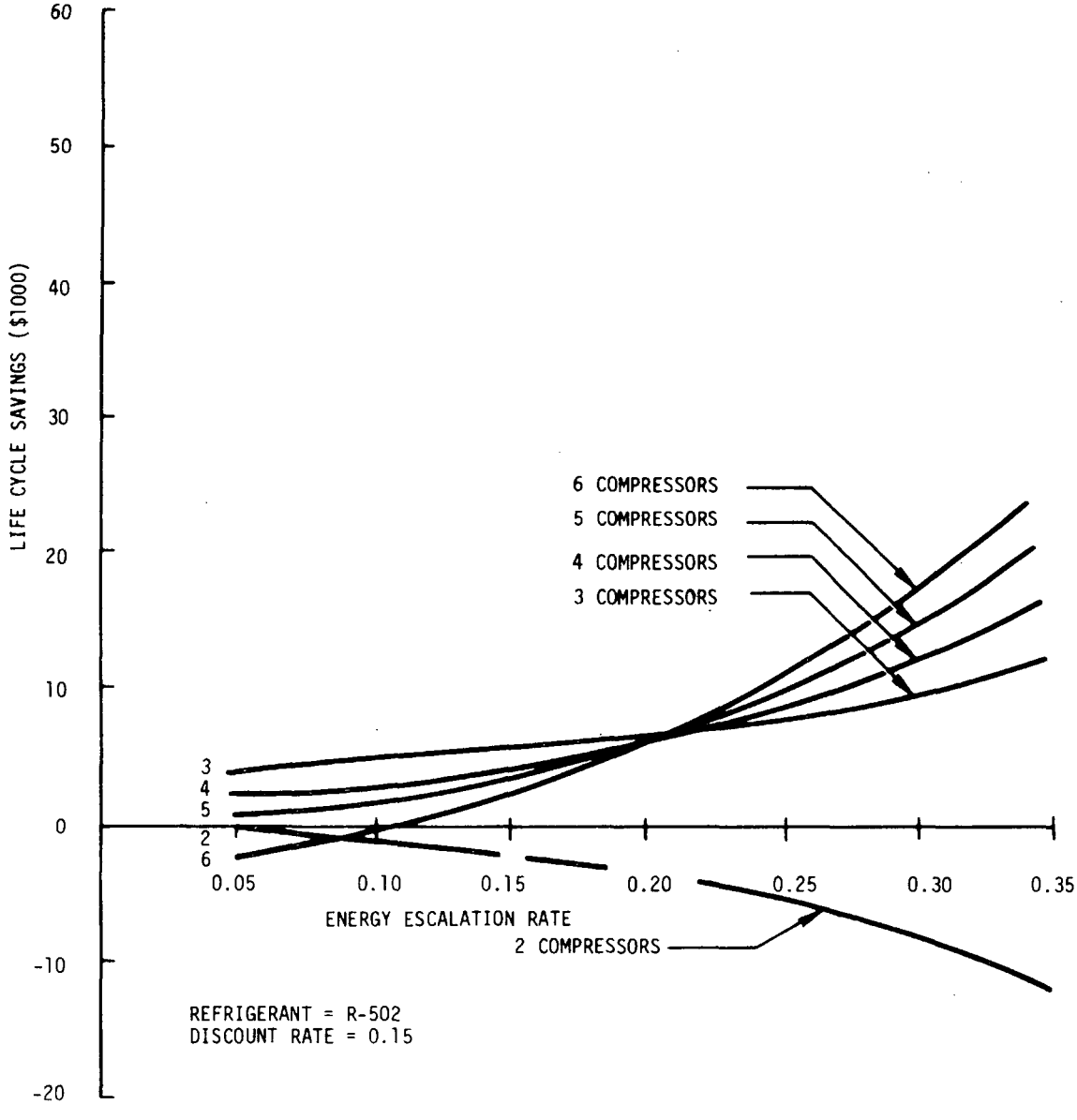

FIGURE 10. - Sensitivity analysis of life cycle savings for unequal parallel compressor systems, refrigerant = R-502, discount rate = 0.15.

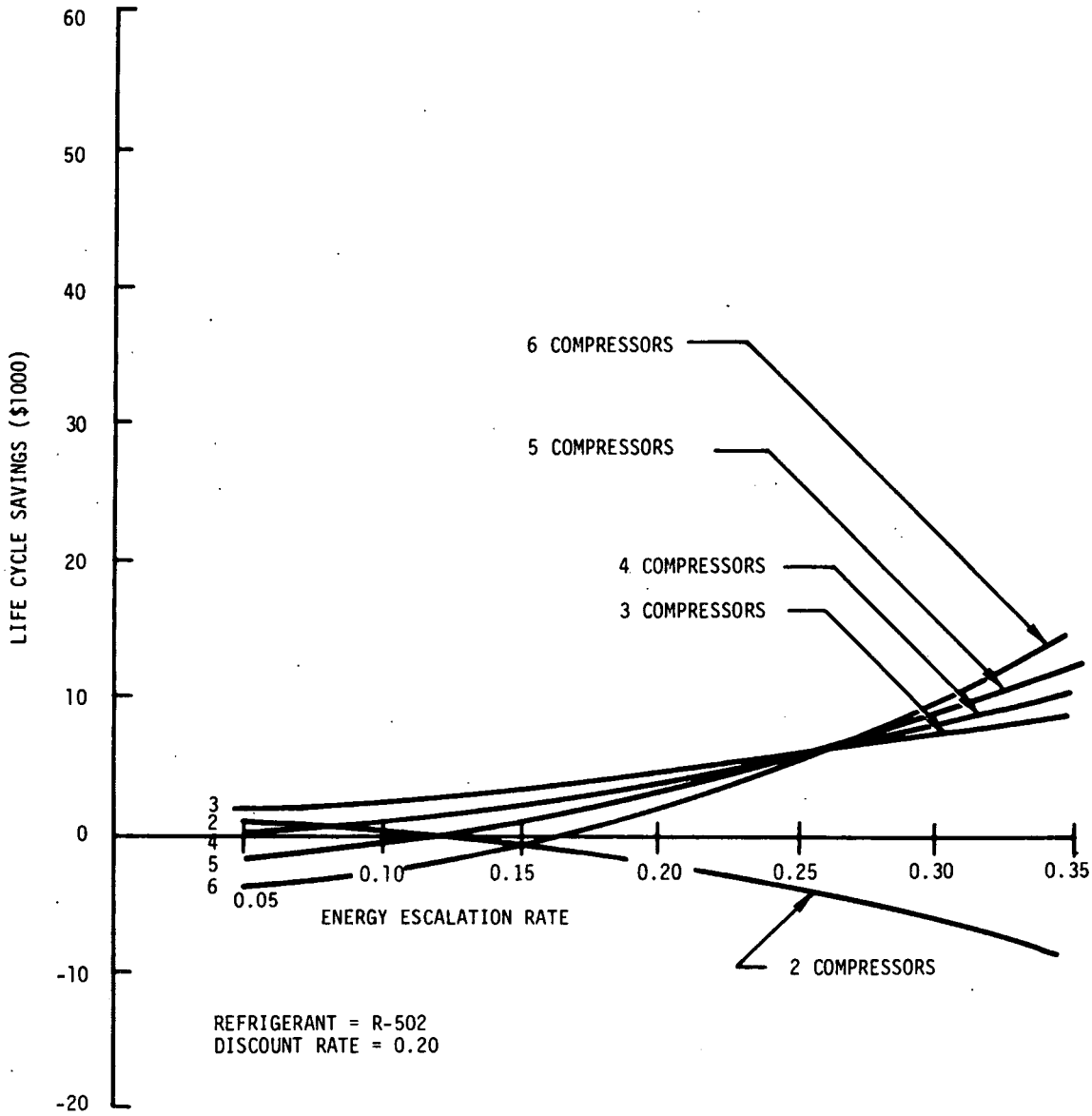

FIGURE 11. - Sensitivity analysis of life cycle savings for unequal parallel compressor systems, refrigerant = R-502, discount rate = 0.20.

The three-compressor system produces the greatest savings until the energy escalation rate attains a value of five percentage points greater than the discount rate. At this point, the life cycle savings of all of these systems are the same. Beyond this point, the order of the systems reverses with respect to greatest savings.

It is clear that, for reasonable electrical energy escalation rates ($E_p < 0.15$), the three-compressor system represents the optimum selection in terms of life cycle savings. Furthermore, in the view of the Friedrich Marketing Department, compressor racks containing more than three compressors would be difficult to market. Thus it was agreed that the three-compressor rack should be designed and developed. The 35 hp rack represents a medium-sized rack for a store. While larger racks may be desirable for some of the newer and larger supermarkets, Friedrich feels that the 35 hp rack could be more broadly applied.

Once the capacity control algorithm and other nuances of design are proven, they should be applicable to racks containing any number and any size of compressors. Thus the three-compressor 35 hp rack was chosen as a basis for the new energy efficient refrigeration system being developed in this program.

3.1.3.4 The Effect of Controls Cost on System Economics

In order to properly use the unequal, parallel compressor system, it is necessary to employ a sophisticated control system such as a microprocessor-based electronic control system. This type of control system allows the correct sequence of compressors to be selected under any given set of operating conditions. While such a system is complex, it is not necessarily expensive, considering the recent cost reductions that have occured in the microelectronics industry. Further development work, beyond the scope of this program, is required to provide an accurate cost estimate of a microprocessor-based electronic control system.

However, for this analysis, a control cost range of $0 to $1500 was examined. A maximum value of $1500 is comparable to the maximum cost of state-of-the-art microprocessor-based control systems for other applications. The effects of this added cost on life cycle savings and payback were considered for the three unequal, parallel compressor system. The basis for comparison is a three equal, parallel compressor system operating with floating condenser head pressure system. The constant and variable refrigeration load profiles were also considered in this analysis with R-12 and R-502 as refrigerants. The R-12 system operated at an evaporator temperature of 20°F while the R-502 system operated at -20°F.

The results of the analysis are presented in Table 8. The amount of added cost that can be tolerated for the system controls will depend upon the length of the payback time period that is considered acceptable. A reasonable payback time period for the supermarket industry is 3 years. The results show that for a R-12 system an added cost of $1000 to $1500 for the microprocessor-based electronic control system is acceptable. For the R-502 system an added cost of $500 to $1000 can be considered acceptable.

3.1.4 Comparison of the Three Unequal, Parallel Compressor System to Conventional Supermarket Refrigeration Systems

A comparison analysis was also made between the three unequal, parallel compressor system and a conventional supermarket refrigeration system. The conventional system consisted of three equal, parallel compressors of a total capacity comparable to the three unequal, parallel compressor system. As is the standard practice, the condenser temperature of the three equal, parallel compressor system was artificially maintained at a minimum value of 90°F.

It should be noted that no attempt was made to include subcooling effects in this analysis. In most conventional systems the added subcooling is lost due to receiver pressurization. The two systems were analyzed in the same manner used previously.

For the two refrigeration load profiles, the annual energy consumptions were calculated and are presented in Table 9. Compared to the conventional supermarket refrigeration systems, the three unequal parallel compressor system with R-12 will demonstrate a maximum annual energy savings of 26 percent and with R-502 will demonstrate a maximum annual energy savings of 15 percent.

3.2 Floating Condenser Pressure System

In a study of the floating condenser pressure concept, it was decided that the improvement and optimization of an existing system would prove a more efficient use of time than the design of a totally new system. Of the existing systems considered, the Seasonmiser® system from McQuay-Perfex, Inc., was found to be the most versatile. This system ensures sufficient subcooling to prevent refrigerant flashing before the expansion valve under any condenser pressure condition. It also has the capability of automatically raising condenser pressure to preset levels for heat reclaim and hot gas defrost purposes.

TABLE 8. - Life cycle savings estimates of the three unequal parallel compressor system including microprocessor-based electronic control system cost

Added control system cost ($)	Variable refrigeration load profile				Constant refrigeration load profile			
	R-12		R-502		R-12		R-502	
	Life cycle savings ($)	Payback (years)	Life cycle savings ($)	Payback (years)	Life cycle savings ($)	Payback (years)	Life cycle savings ($)	Payback (years)
0	8114	0	2567	0	6945	0	4477	0
300	7814	<1	2267	1	6645	0	4177	0.5
500	7614	1.5	2067	3	6445	1	3977	1.5
1000	7114	3	1567	5	5945	2	3477	3
1500	6614	5	1067	8	5445	3	2977	4.5

TABLE 9. - Annual electrical energy consumption comparison of three unequal parallel compressor and conventional supermarket refrigeration system

System description	Annual electrical energy consumption (10^3 kW-hr)			
	Variable refrigeration load profile		Constant refrigeration load profile	
	R-12	R-502	R-12	R-502
Three unequal parallel compressors floating head pressure*	83.8	86.7	112.6	114.2
Three equal parallel compressors minimum condenser temperature = 90°F	112.9	99.9	148.0	134.3
	Percent annual energy savings			
	25.8	13.2	23.9	15.0

*For R-12 systems, minimum condenser temperature = 65°F
For R-502 systems, minimum condenser temperature = 40°F.

Schematics describing salient points of the McQuay system are shown in Figures 12 and 13. Sensors in the liquid refrigerant, hot gas, and heat reclaim lines are connected to a heat motor which operates a three-way pressure control valve. This valve mixes hot gas with condensed liquid entering the receiver, thereby regulating receiver and condenser pressure. Under normal operation, the condenser pressure is allowed to float with ambient temperature. If the liquid line subcooling or the differential pressure across the expansion valve fall below preset minimum values, the sensors energize the heat motor which closes down the Seasonmiser valve, reducing condensed liquid flow and increasing the condenser pressure. Similar action occurs when additional heat from the reclaim coil is required, or when the system enters the hot gas defrost mode. A drawback to this method is that the condensed liquid is mixed with the hot gas in the receiver, thus raising its temperature and losing subcooling it may have gained in the condenser.

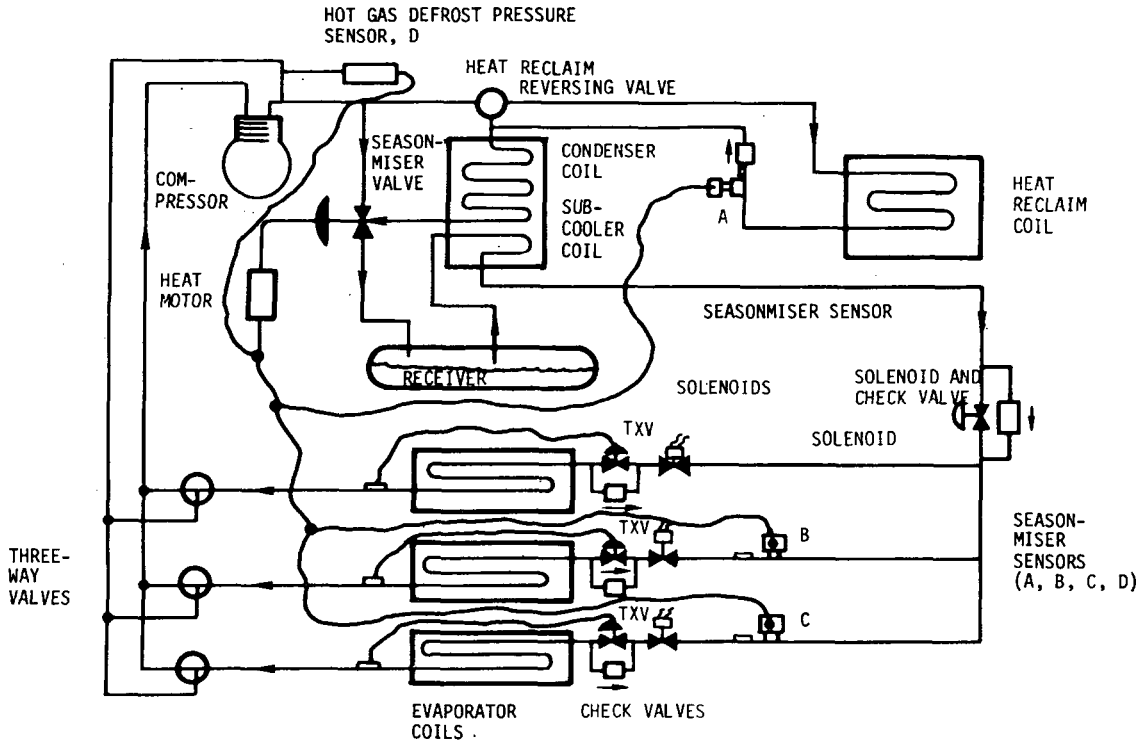

FIGURE 12. - McQuay Seasonmiser system.

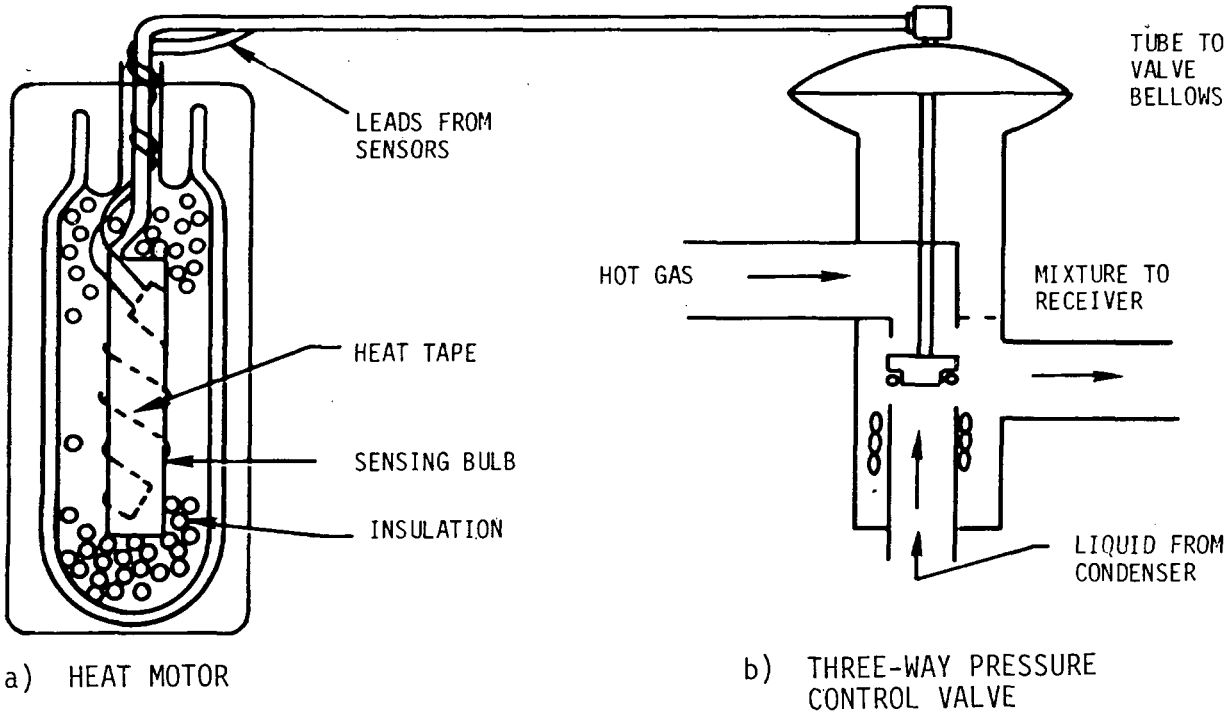

FIGURE 13. - Detail of McQuay heat motor and pressure control valve.

A number of refrigeration manufacturers, including Friedrich, offer an alternative method to take advantage of low ambient temperatures. These systems are referred to as "ambient-subcooling" systems. A typical example is the Friedrich two-compressor system shown in Figure 14. The minimum condensing temperature is set at 90°F (or as low as 65°F in some systems). Above this minimum setpoint, the temperature, and therefore the condensing pressure, is allowed to float with ambient conditions. Below this setpoint, the condenser floods with refrigerant to maintain pressure, resulting in subcooled refrigerant. The subcooled refrigerant is passed through a surge-type low-pressure receiver before flowing to the evaporators. The subcooled liquid enters the bottom of the receiver, while the pressurizing hot gas enters at the top. The vertical receiver of a small cross-section minimizes heat gain by the liquid refrigerant from contact with the hot gas at the gas-liquid interface.

The ambient subcooled system can increase the refrigeration effect occuring in the evaporator by supplying highly subcooled liquid refrigerant. The total amount of refrigerant mass flow required is thus reduced. However, the head pressure must be artificially maintained forcing the compressor to operate at a lower efficiency.

The effects of heat reclaim and hot gas defrost on system performance must be considered. It is conceivable that a refrigeration system could spend a considerable amount of operating time in one of these modes. For heat reclaim or hot gas defrost, the condenser pressure must be maintained at a high level. The Seasonmiser system increases condenser pressure by the following sequence:

a. When a large increase in condenser pressure is required, the condenser fans are cycled. The cycling is controlled by a pressure switch measuring condenser head pressure.

b. The Seasonmiser valve throttles liquid flow from the condenser into the receiver and pressurizes the receiver by admitting hot gas.

The result of the pressurization of the receiver is that much of the liquid subcooling is lost. Some subcooling is accomplished in the subcooler, but the amount of subcooling

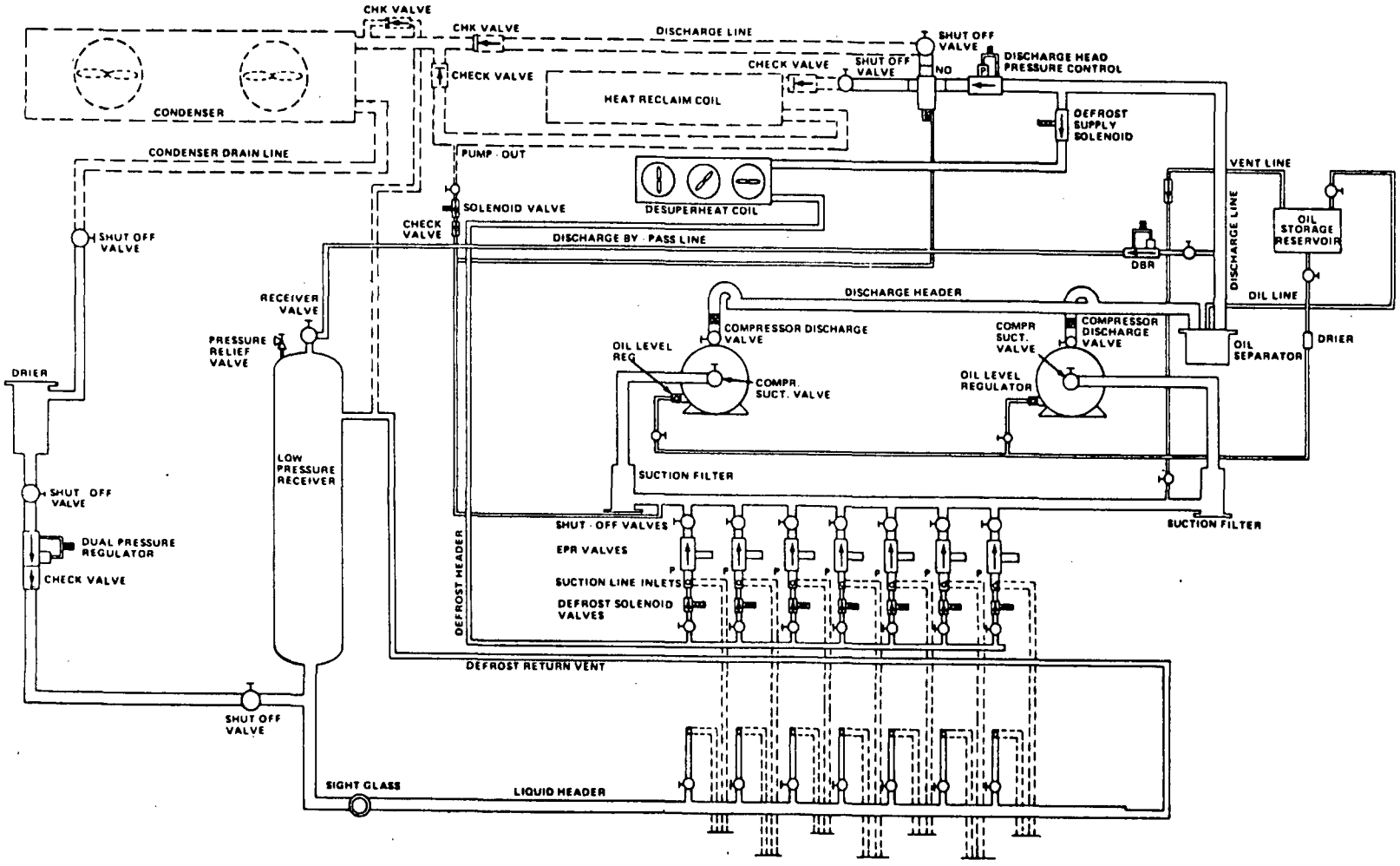

FIGURE 14. - Friedrich two-compressor refrigeration system.

regained is considerably less than the amount lost in receiver pressurization. In contrast, the subcooling is maintained in the ambient-subcooled arrangement during heat reclaim and hot gas defrost. Receiver pressurization is accomplished during these modes without mixing the subcooled liquid with large quantities of hot gas. It is likely, therefore, that during heat reclaim and hot gas defrost, the ambient subcooled system will be more energy-efficient than the Seasonmiser floating head pressure system. However, this has not been demonstrated experimentally.

3.3 Compressor Capacity Control Algorithm

The pressure control algorithm was designed to select the optimum compressor combination for each operating condition by monitoring the variation in suction pressure and making appropriate changes which matched compressor capacity to refrigeration load. In addition, the algorithm keeps track of compressor off-time to ensure that short cycling of compressors does not occur, and that the compressor can respond to special conditions, such as defrost periods.

The algorithm was developed by Friedrich engineers based on systems analysis and operating experience with many other types of control systems. The algorithm was adapted by FMA engineers to the microprocessor application. The algorithm has been programmed in BASIC computer language on a computer at Friedrich, and has satisfied a number of real-time tests with computer-simulated conditions. The algorithm is now ready for hardware testing on the system described in Section 4.

The three unequal, compressor system can operate in eight different modes or capacity states, as shown in Table 10. The capacity state, denoted by L, corresponding to the operating load, is selected by comparing the operating suction pressure to predetermined cut-in or cut-out pressure levels, denoted by PCI and PCO, respectively.

To assure adequate lubrication and lengthen compressor life by preventing short cycling, the compressor manufacturers require that a compressor operate for a minimum time period (2 to 3 min) each time it is turned on. In this capacity control algorithm, the compressors are kept off for a minimum time period, ensuring that when they come on, they will have to operate for a minimum time period of the same order.

The main operating variables in the algorithm are the preset cut-in and cut-out pressures, and the cycle time that determines how often the operating pressure is checked. These variables will be determined during the experimental test program described in Section 5.

TABLE 10. - Unequal parallel compressor system capacity states

Capacity State (L)	Compressor size (hp)			Percent of Total capacity
	5 hp	10 hp	20 hp	
0				0.0
1	X			14.3
2		X		28.6
3	X	X		42.9
4			X	57.1
5	X		X	71.4
6		X	X	85.7
7	X	X	X	100.0

3.4 The Microprocessor-Based Control System

The primary function of the control system is to implement the compressor control algorithm described in the previous subsection. During the test period, the control system should also be able to accommodate changes and additions to the algorithm. A further requirement of the control system is that it can be mass-produced at a cost low enough to provide a payback in system energy savings of less than 3 years.

3.4.1 Comparison of Different Control Systems

A microprocessor-based control system has been selected over two other types of control systems: mechanical controls and programmable solid-state controllers. While mechanical control systems are widely used and inexpensive, they cannot achieve the complexity of the capacity control algorithm and they offer little flexibility when installed. Hardware, and associated costs, greatly increase when the complexity of the system is increased. Furthermore, mechanical controls can be field-adjusted to give trouble-free, but inefficient, operation. Microprocessors and programmable solid-state controllers both offer the

same advantages. Both can claim excellent reliability and flexibility, and can satisfy the needs of control algorithms far more complicated than the one under consideration here. The advantage of a microprocessor-based system is that it can be designed from the ground up for a particular application. The additional sophistication of a programmable solid-state controller is not necessary when the microprocessor system is tailored to a particular application. As a result, the cost of a mass-produced microprocessor system is substantially lower than that of a typical programmable controller. A microprocessor-based control system was therefore chosen for this project; its selection and design are discussed in the following subsections.

3.4.2 Development Procedure for a Microprocessor-Based System

The development of a microprocessor-based system is outlined in the flow chart of Figure 15. The procedure is divided into five main categories as might be done for any experimental system: design; assembly; preliminary testing; testing and modification of the integrated system; and application. While the system design is of primary interest in this report, it will be instructive to briefly describe the system development procedure before concentrating on system design in the following subsection.

Once the design of the system is complete, the assembling of the hardware begins. On the hardware side, various integrated circuit boards and other components are physically wired into a compact assembly. On the software side, a minicomputer is used to develop code, that is, program the algorithm, quickly and efficiently. The minicomputer converts programs written in common high-level computer language into machine-executable code compatible with the microprocessor. As shown in Figure 16, when both hardware and software have been tested separately, they are integrated by loading the machine code into the microprocessor under test conditions. This is accomplished by an in-circuit emulator. The in-circuit emulator allows an operator to exercise all the microprocessor hardware under program control, and if needed, alter the program during system debug. Once in-circuit emulator testing of the microprocessor has been completed, it will be installed in the laboratory test system for further testing. When laboratory tests have been satisfied, the system is ready to be applied in commercial products.

3.4.3 Design of the Microprocessor-Based System

The microprocessor-based control system has been designed to the criteria listed in subsection 2.2 The inclusion of the data acquisition role and the requirement of system flexibility for testing have made this design somewhat more complex than would be the design of the end product for commercial purposes. On the other hand, the design described here can easily be selectively tailored to fit the particular requirements of any commercial system.

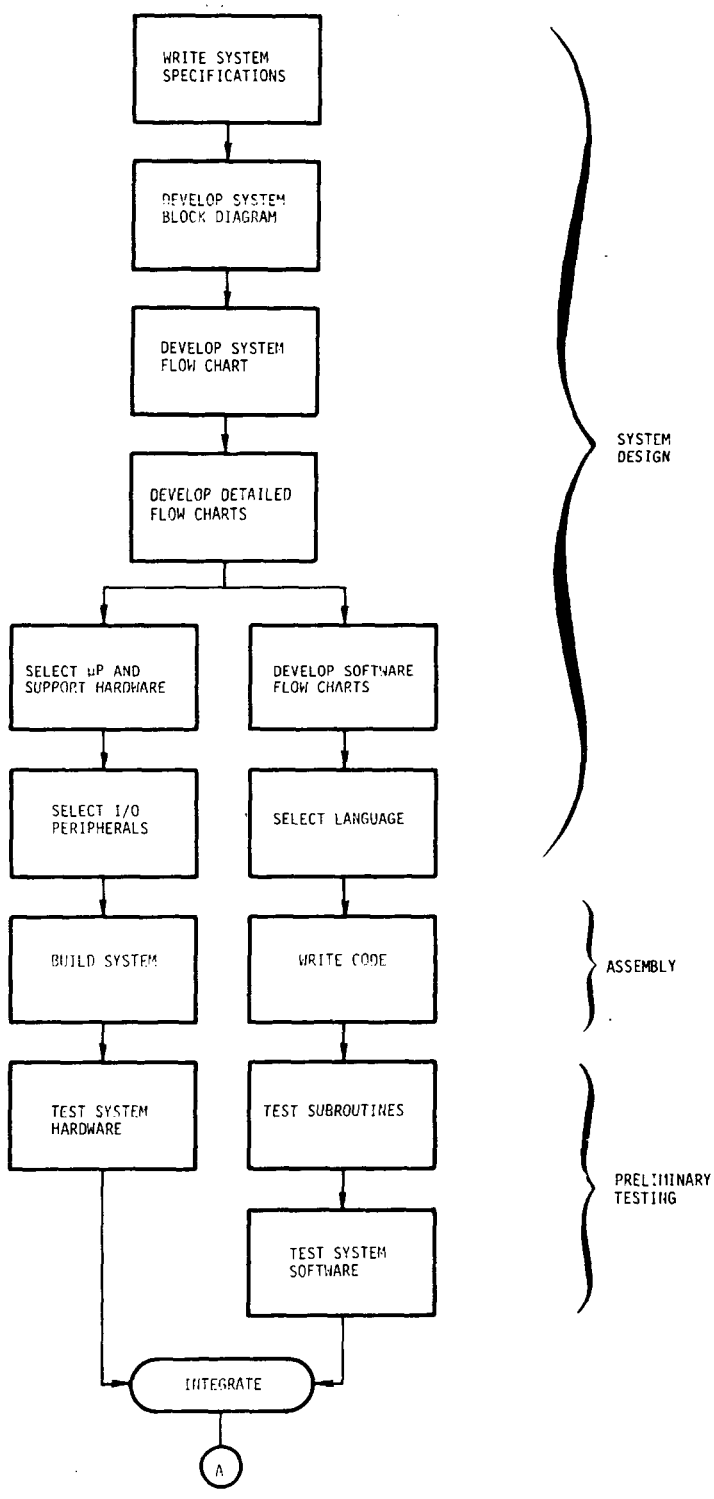

FIGURE 15. - Development procedure for microprocessor-based system.

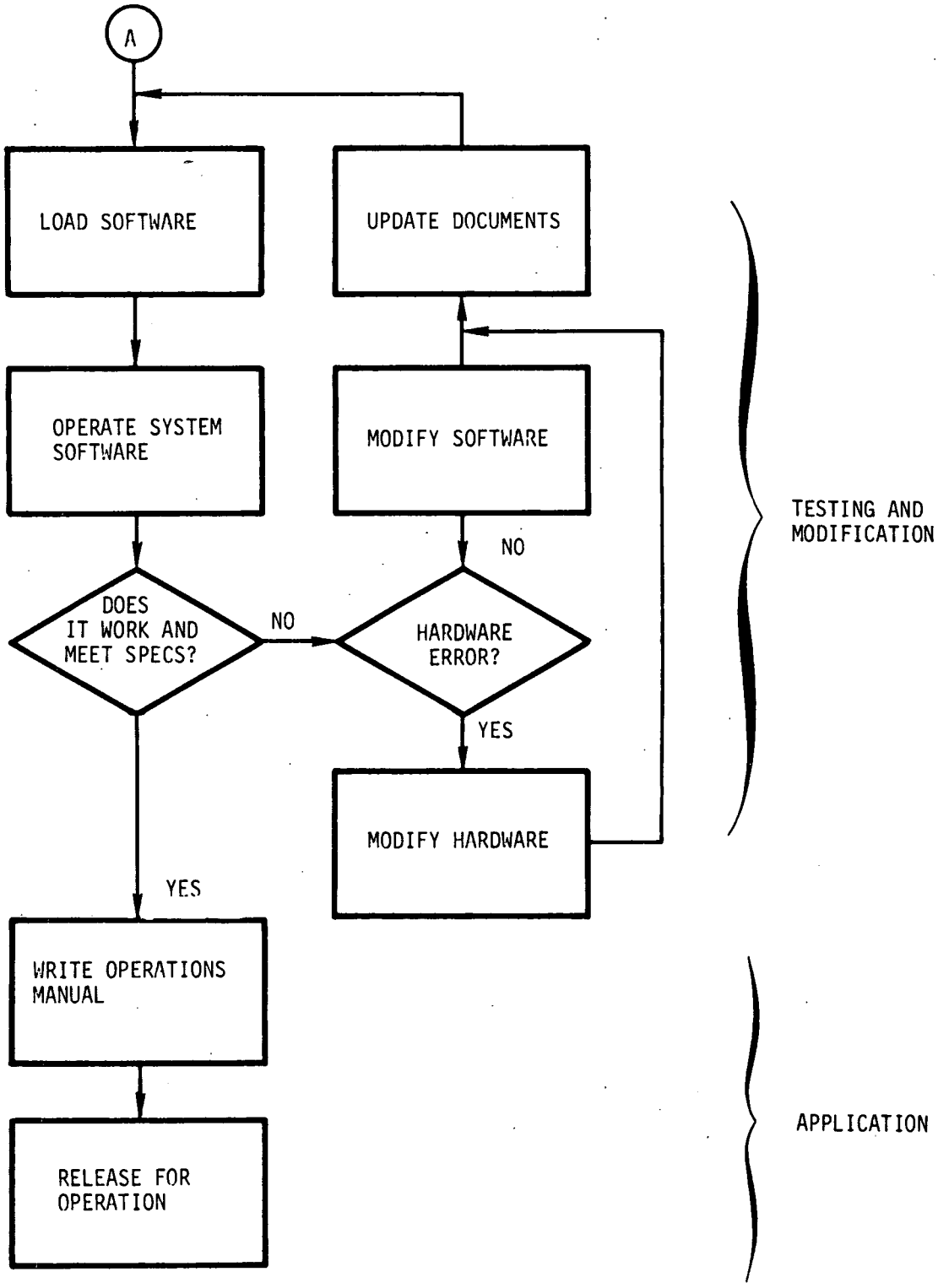

FIGURE 15. - Development procedure for microprocessor-based system (continued).

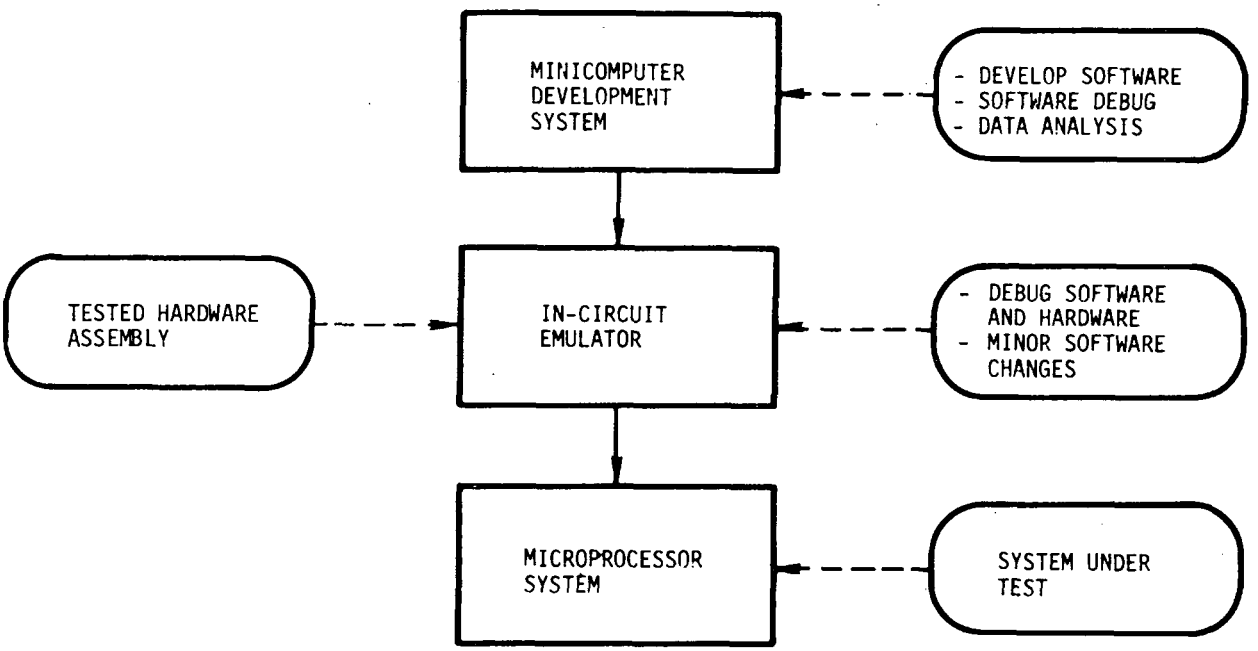

FIGURE 16. - Microprocessor development system.

3.4.3.1 Software Design

The overall control system is described by the main control program flow chart as shown in Figure 17. The system is designed based on interrupt circuits, which transfer program control to the desired function. This compressor control program will have two main functions: capacity control, and datalogging. For greater flexibility, a programmable timer, or counter, will generate separate interrupt requests for each function at desired time intervals. When the program is first turned on, or any time it is reset, the initialization procedure sets up operating parameters such as inputs to the capacity control or datalogging algorithms, and initializes the interrupt timer and a real-time clock. When an interrupt request for capacity control occurs, program control passes to the algorithm. For datalogging, control will pass to the algorithm described in Figure 18. In addition, the program has the capacity to accommodate special input and output requests from the keyboard.

Several computer languages were considered for software programming. High level languages such as FORTRAN or BASIC, while simple to program, require large amounts of memory space. Machine language, on the other hand, requires more painstaking programming, but can be stored more efficiently. Efficient

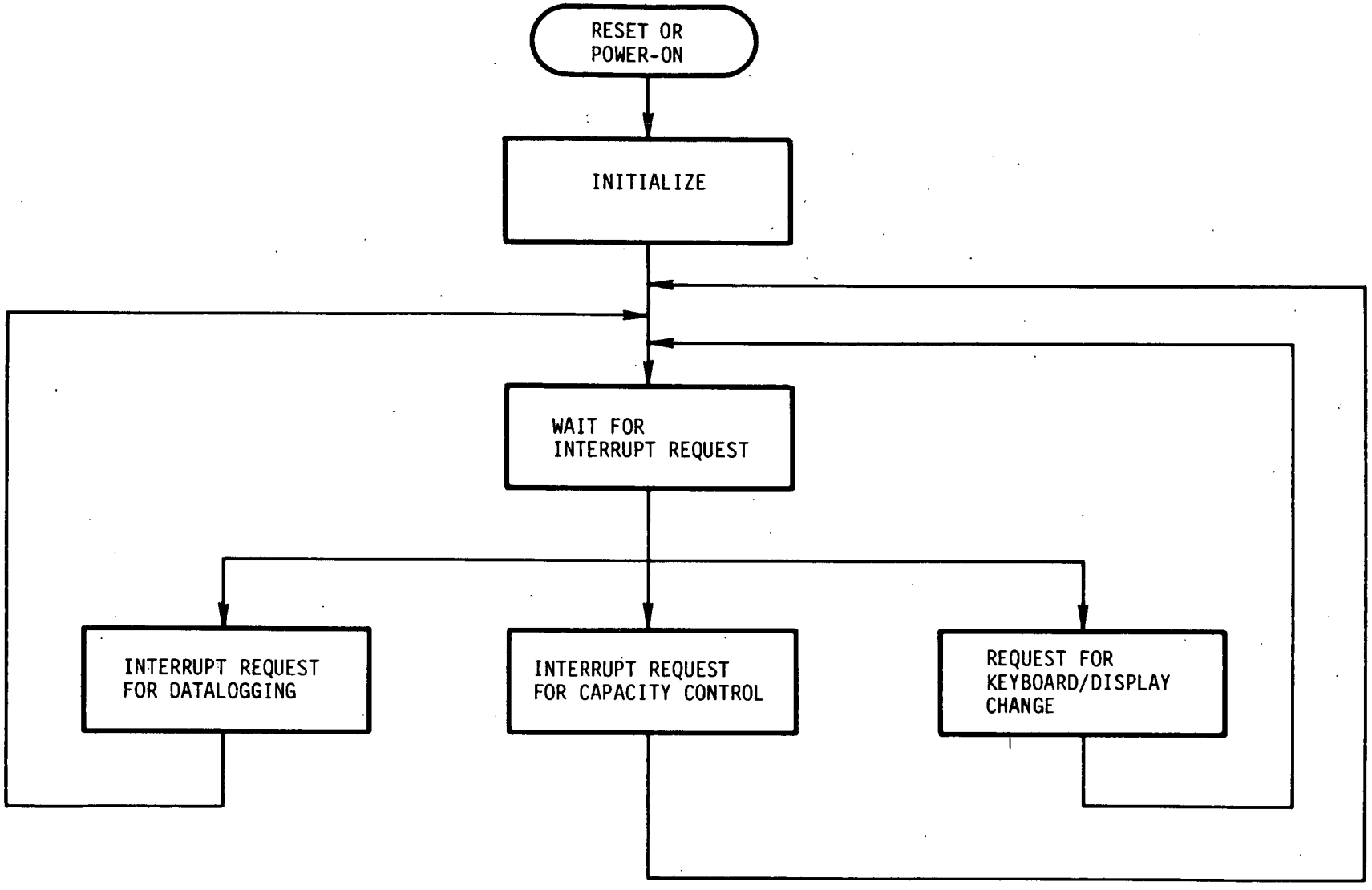

FIGURE 17. - Main control program.

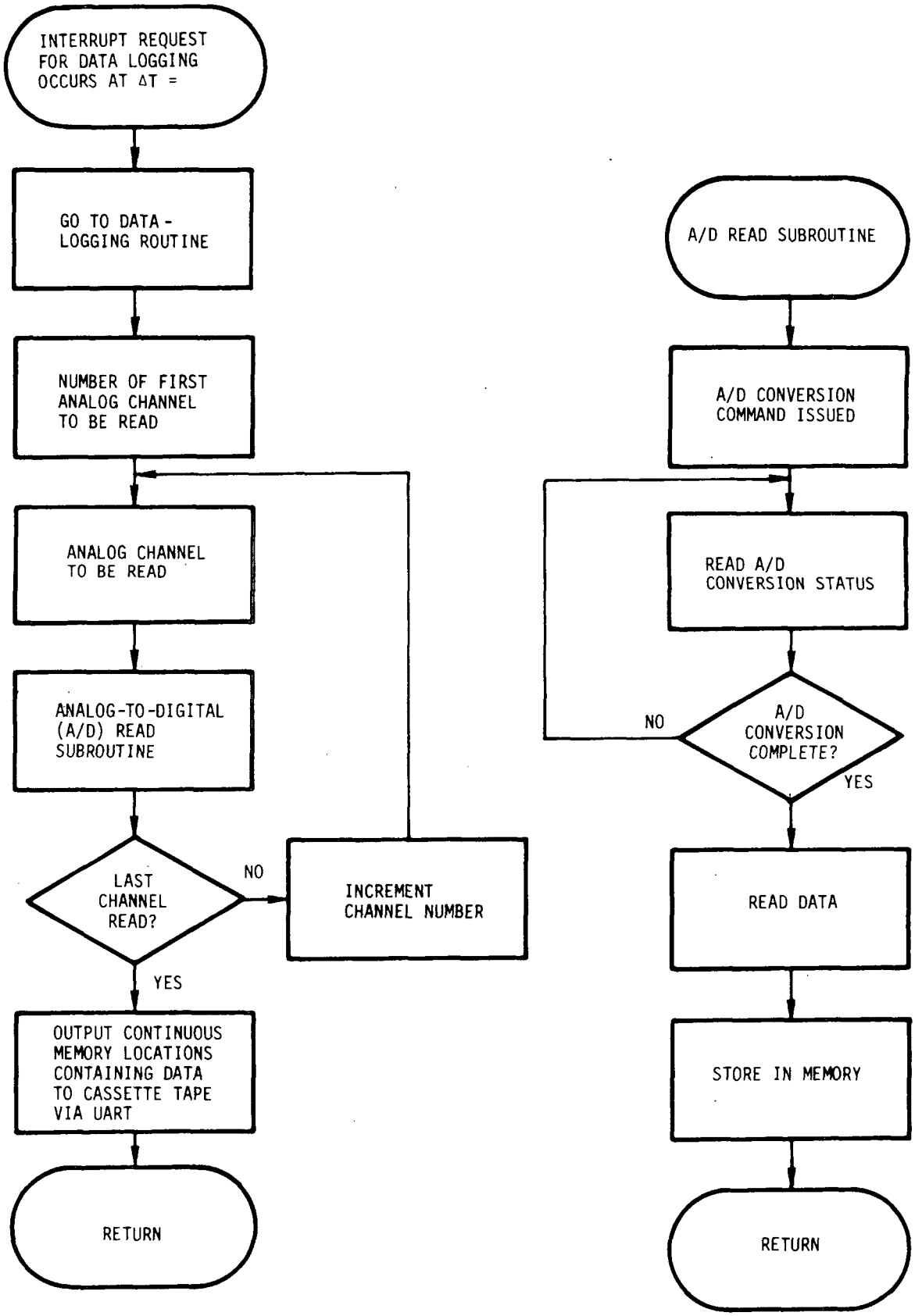

FIGURE 18. - Flow chart of datalogging algorithm.

storage is an important consideration when designing microprocessors for possible mass production, as is being done in this project. Furthermore, FMA engineers have had substantial experience in programming and documentation in various machine languages. As a result, machine language programming was chosen for this software design.

3.4.3.2 Hardware Design

The physical system designed to implement the software discussed above is shown in the block diagram of Figure 19, and described by component in the accompanying table (Table 11). The top of Figure 19 shows components internal to the microprocessor itself. The core of the system is the central processing unit (CPU) and the random access and read-only memories (RAM and ROM). A keyboard display is provided to facilitate on-line input and output. Other components include a real-time clock, a programmable timer/counter, and a priority interrupt card. These components allow the central processor control to transfer to different algorithms stored in ROM. The RAM will be used primarily during program writing and modification.

Components listed below the STD BUS line represent the input/output action of the microprocessor system. Analog measurements of desired quantities are translated to digital format via an analog to digital convertor. Digital output to the compressor is provided by an optically isolated output board, while a Universal Asynchronous Receiver/Transmitter (UART) allows serial transmission of large amounts of data to peripheral devices.

The system is designed around the STD BUS which provides communication channels for all microprocessor components. The STD BUS allows a full and modular layout of different component boards, and can accommodate several microprocessor boards on the same system. The STD BUS was chosen because of its widespread usage, large availability of compatible components, and modular flexibility.

Most of the boards were purchased from Pro-Log Corporation. Pro-Log offers one of the widest selections of microprocessor board components available on the market. Pro-Log also provides full sets of comprehensive manuals that include extensive documentation on every component. FMA engineers have worked with Pro-Log in the past, are familiar with Pro-Log equipment, and have been pleased with equipment performance. While Pro-Log establishes the industry prices for major components, there are cases where components are available from other manufacturers at substantially lower prices. This was the case with the battery-backed RAM boards, which were purchased from Enterprise Systems.

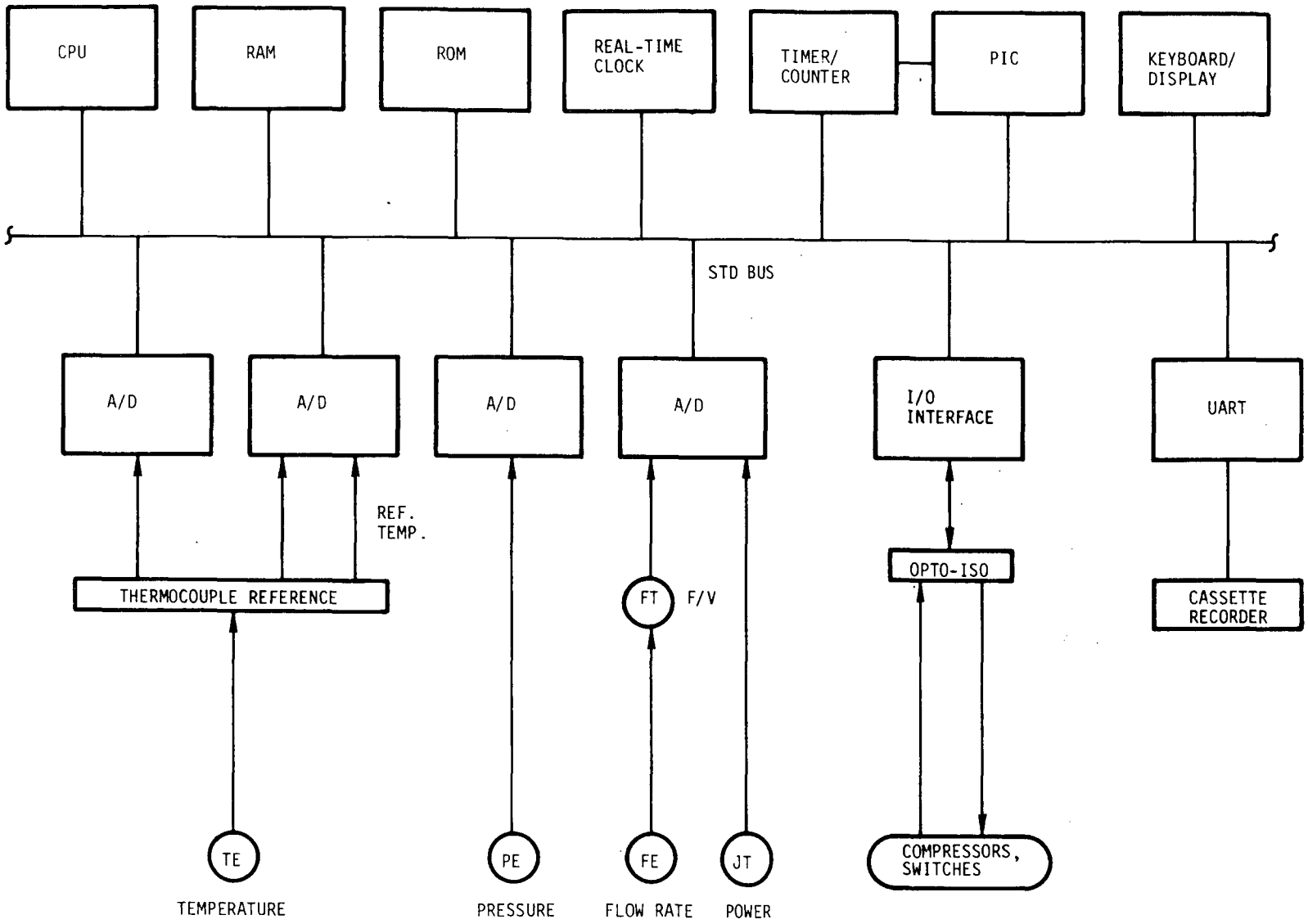

FIGURE 19. - Microprocessor system configuration (see Table 11 for component description).

TABLE 11. - Main components of microprocessor system

Component	Manufacturer	Function
STD-BUS - Standard Bus	(Pro-Log Corporation)	Bus line for all communication internal to the processor, including transfer of control, data, and address locations
CPU - Central Processing Unit	(Pro-Log Corporation)	Intel 8085 Microprocessor with supporting hardware
RAM - Random Access Memory	(Enterprise Systems Corporation)	Volatile memory that can be written to or read from
ROM - Read Only Memory	(Pro-Log Corporation)	Nonvolatile memory that can be read from only
Real-Time Clock	(Enlode Corporation)	Crystal-controlled clock which generates calendar and time-of-day data
Timer/Counter	(Pro-Log Corporation)	Programmable multichannel timer/counter for interrupt service and timing routines
PIC - Priority Interrup Card	(Pro-Log Corporation)	Arranges in order of importance interrupt requests and generates single interrupt requests for the microprocessor
Keyboard/Display	(Pro-Log Corporation)	Control panel card that provides data input and display capability
Analog-to-Digital Converter	(Data Translation, Inc.)	Converts analog input signals to digital format for microprocessor
I/O (Input/Output) Interface	(Pro-Log Corporation)	Provides electrical interface and address decoding for optically isolated input/output interface board
OPTO-ISO - Optically Isolated Input/Output Board	(Opto 22)	Provides photo-isolated interface between microprocessor and field control components
UART - Universal Asynchronous Receiver/Transmitter	(Pro-Log Corporation)	Provides serial data transmission for peripherals
Cassette Recorder	(ADPI, Inc.)	Allows permanent storage of logged data files, and communication with remote computer for data reduction

The CPU chosen for the current application is the Intel 8085. This is a medium-capability, medium-priced board which offers good flexibility and is well supported. It is commonly used and compatible with a wide range of peripheral equipment.

Two cassette read/write recorders have been purchased from Analog and Digital Peripherals, Inc. (ADPI). The recorders have some intelligence capability and require a minimum of software to be integrated into the microprocessor system. Most other recorder companies require separate instruments for reading and writing. The ADPI recorders have been evaluated from both a hardware and a software standpoint and found to meet all system specifications. Furthermore, the ADPI recorders offer a substantial cost savings over other systems investigated.

4. EXPERIMENTAL TEST SYSTEM DESIGN

The designs described in Section 3 have been integrated and designed into a complete experimental test system. A description of the two major parts of the test setup, the refrigeration system and the refrigeration load model, along with accompanying instrumentation, is presented in this section.

4.1 Experimental Refrigeration System

The elements of the experimental refrigeration system are depicted schematically in Figure 20. The basic elements of the refrigeration system are the compressors and their associated hardware, the condenser, including the Seasonmiser components, and the heat reclaim coil.

The compressors are mounted on a rack on which much of the associated system hardware is also located. Included with this hardware are the liquid and suction manifolds, the hot gas defrost components, the heat reclaim control valves, the compressor lubrication system, and all of the electrical components associated with the operation of the system. Most of the components on this rack are standard components employed on all multiple compressor systems manufactured by Friedrich. Modifications to this rack for the experimental test system consisted of equipping the rack with 5, 10, and 20 hp compressors, providing extra valving so that both floating and fixed condenser head pressure can be examined, adding the Seasonmiser control components, and providing electrical wiring components for the integration of the microprocessor control.

To equip the system with the capability to operate in either a fixed or floating condenser pressure or head pressure mode, certain piping modifications to the system were required. The major elements of the Seasonmiser system consist of the condenser, the Seasonmiser control valve, the receiver, and the subcooler (Figure 20). When this system is in operation, no head pressure regulator is required. A bypass is provided on the compressor rack so that the flow of refrigerant is directed around the head pressure regulator. The receiver located on the rack is isolated from the piping system when floating head pressure is used. This receiver is an integral part of the ambient subcooling fixed head pressure system but is not required for floating head pressure operation. When fixed head pressure operation is desired, the Seasonmiser valve, the roof-mounted receiver, and the subcooler must be isolated from the system. This is accomplished by providing isolation valves on these components and bypass piping as shown in Figure 20. The head pressure regulator is used in the fixed head pressure system so that the bypass located on the skid is shut off. The rack-mounted receiver is utilized in the fixed head pressure system.

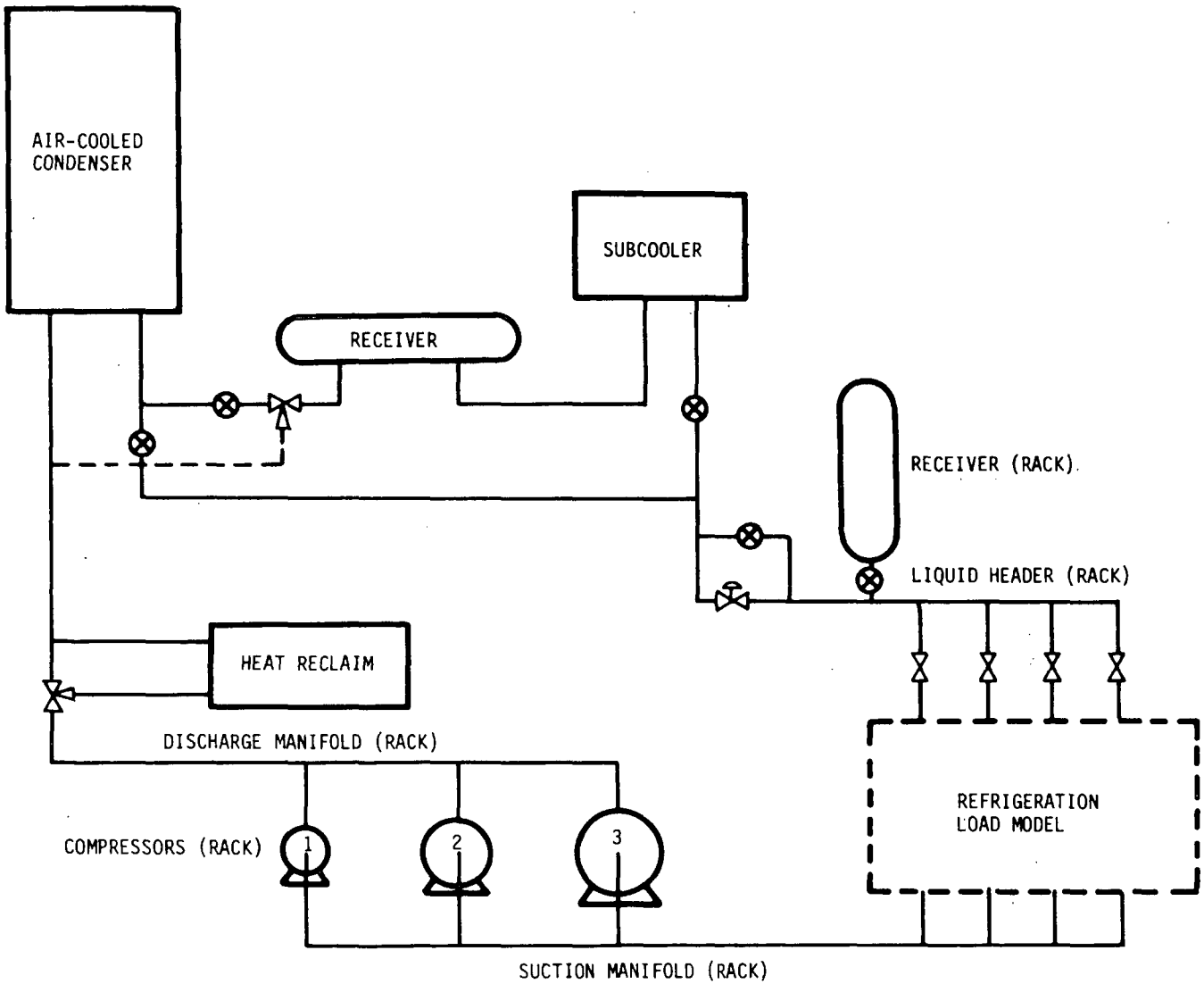

FIGURE 20. - Elements of the experimental supermarket refrigeration system.

Modifications were also made in the system wiring to accommodate the Seasonmiser control components. These components consist of sensors located on the liquid refrigerant lines before the thermal expansion valves, at the heat reclaim coil, and in the hot gas defrost system (Figure 12). These sensors measure the temperature and pressure of the system to determine if adjustment by the Seasonmiser valve is required. These sensors are arranged as an independent circuit which is activated when the Seasonmiser floating head pressure control is utilized. When fixed head pressure is employed, the sensors are deactivated and control of the system is accomplished by the control components normally found on the compressor rack.

The system wiring was also changed so that control of the system could be directed by the microprocessor. In this mode, the pressure switches normally used for compressor control are deactivated. The microprocessor is then directly connected to the compressor wiring.

4.2 Refrigeration Load Model

The refrigeration load of a supermarket can be characterized by the following operating conditions:

a. Seasonal load variations due to change in ambient temperature and humidity

b. Display case cycling due to thermostatic control of display case temperature

c. Hot gas defrost of the display cases.

Each of these load characteristics will greatly influence the required compressor capacity, and must be considered when developing control techniques for the unequal parallel compressors.

The refrigeration load model that will be employed to test the unequal parallel compressor refrigeration system is depicted in Figure 21. The refrigeration load will be divided into four loops, consisting of:

a. One walk-in chest

b. One display case

c. Two brine chiller loops.

The walk-in chest is intended to represent approximately 25 percent of the refrigeration load. The chest is equipped with two unit coolers. These coolers can be defrosted with hot gas. The size of this load represents the maximum fraction of the refrigeration load that can be defrosted with hot gas. The

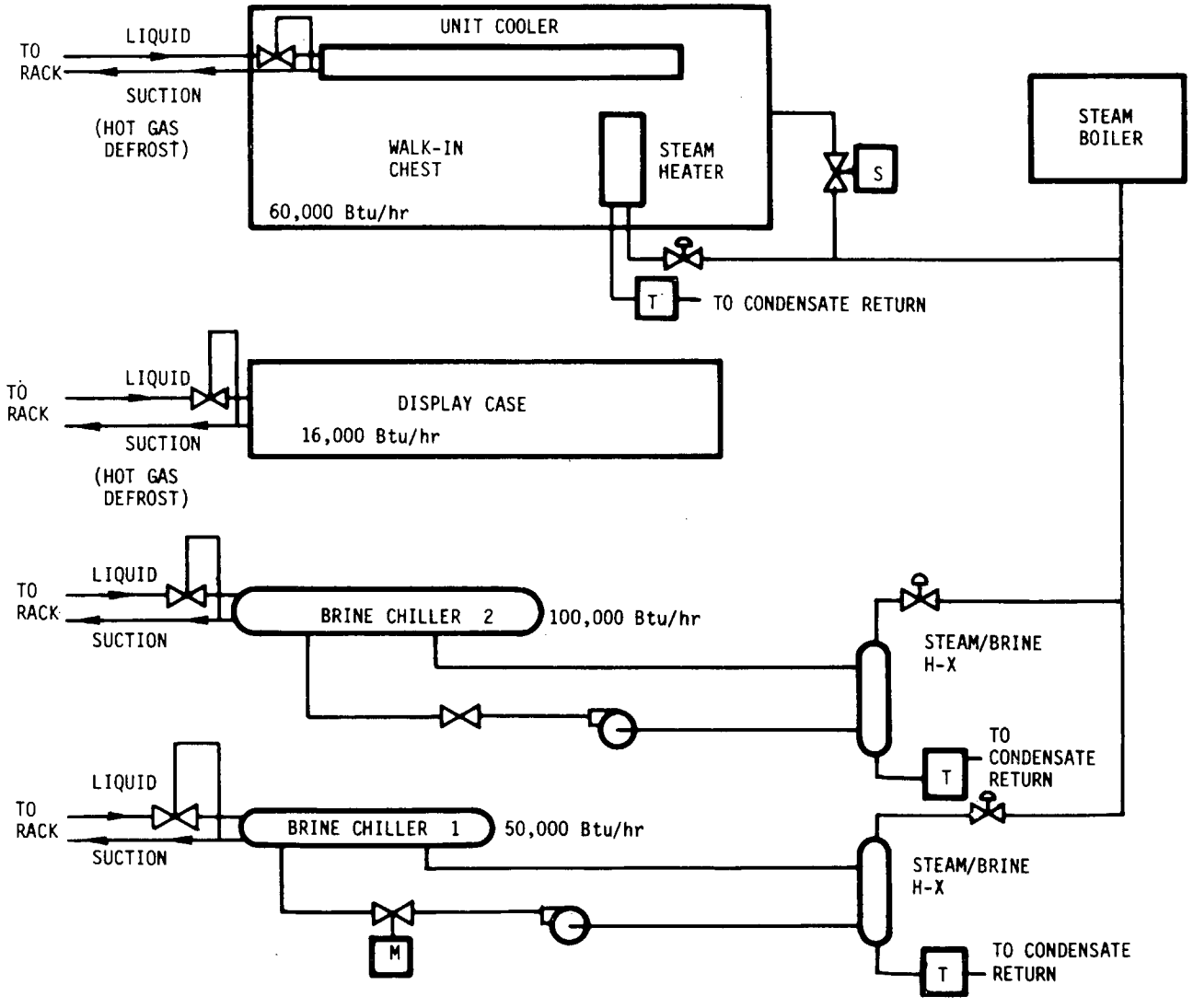

FIGURE 21. - Refrigeration load model.

temperature within the walk-in chest will be maintained at a constant value by a thermostatically-controlled steam heater. The chest will also be equipped with a humidifier which will be supplied by a steam line that is controlled by a solenoid valve. The valve is opened when a humidistat within the chest indicates that the humidity has dropped below the level desired.

The display case is a standard Friedrich multideck freezer case that has a refrigeration load of 20,000 Btu/hr. The display case temperature will be kept constant by the use of a thermostatic expansion valve and an evaporator pressure regulator (EPR) valve. The result of using these control valves is a fluctuating refrigerant flow that will simulate display case cycling.

The seasonal load variation will be modeled using a brine chiller loop. A standard brine chiller evaporator will be employed. A mixture of ethylene-glycol and water will be circulated through it. Heat will be added to the loop by the use of a steam-heated heat exchanger. The refrigeration load incurred by this loop will depend upon the flow rate of the brine. By adjusting this flow rate on a daily or weekly basis throughout the course of the test program, a long-term variation in the refrigeration load can be simulated.

A second brine loop will also be employed in the refrigeration load model. The variation in refrigeration load will also be controlled by varying the flow rate of the brine. By equipping this loop with a motor-actuated valve and supplying a means of programming the opening and closing of this valve, any desired load variation over any given time period can be applied to the system. The valve actuator can be programmed by the use of an actuator that will open or close proportionally to a voltage signal provided to it. The voltage signal will originate from a programmable signal generator. The duration over which the load variation is applied to the system will be controlled by the programmed signal. This arranagement can be used to increase the cyclic load variation of the system if it is deemed necessary.

4.3 Instrumentation

The performance of a refrigeration system is measured through the value of the energy efficiency ratio (EER) achieved by the system. The EER is defined as:

$$EER = \frac{\text{Refrigeration Supplied}}{\text{Energy Input}} \qquad (4\text{-}1)$$

The EER can be considered as either an instantaneous or long-term quantity. In the instantaneous case, the refrigeration supplied is the rate at which refrigeration occurs and the energy consumption is the power consumed by the system at the instant of measurement. The long-term EER is found by first summing the instantaneous refrigeration loads and power consumptions, measured at discrete time intervals, and then by dividing the total refrigeration supplied by the total energy consumed. The total refrigeration supplied can be expressed as:

$$\text{Refrigeration Supplied} = \sum_{i=1}^{N} \dot{Q}_i \Delta\tau_i \qquad (4\text{-}2)$$

where

$\dot{Q}_i$ = the instantaneous refrigeration load of the system

$\Delta\tau_i$ = the time interval between measurements

N = number of time intervals.

The total energy consumed is determined from:

$$\text{Energy Consumed} = \sum_{i=1}^{N} \dot{W}_i \Delta\tau_i \qquad (4\text{-}3)$$

where

$\dot{W}_i$ = the instantaneous power consumption of the system

For this experimental system it is necessary to correlate the performance of the system, as measured by the EER, with the control of the unequal parallel compressors, and the other operating conditions of the refrigeration system. Of particular concern are:

a. The condenser temperature and pressure

b. The ambient temperature

c. Refrigerant subcooling

d. Suction pressure and temperature

e. Compressor sequencing and operation.

All of these quantities will be measured simultaneously and in conjunction with the EER measurements.

The necessary measurements in the refrigeration system are shown in Figure 22. The pressure measurements are indicated by the letter Ⓟ . Pressure measurements will be made by the use of pressure transducers. Temperature measurements are indicated by the letter Ⓣ and will be made by thermocouples. The power consumption of the compressors will be measured by wattmeters Ⓦ attached to each compressor.

The refrigeration load measurements are shown in Figure 23. It is necessary to determine the refrigeration load of the walk-in chests, the display case, and each of the brine loops.

The refrigeration load of each of the brine loops can be determined from:

$$\dot{Q}_{Bi} = \dot{m}_B C \, (T_{in} - T_{out})_B \qquad (4\text{-}4)$$

where

$\dot{Q}_{Bi}$ = the refrigeration load (Btu/hr)

$\dot{m}_B$ = the mass flow rate of the brine (lb/hr)

C = the specific heat of the brine (Btu/lb-F^{o})

T_{in} = the inlet temperature of the brine (F^{o})

T_{out} = the outlet temperature of the brine (F^{o}).

The inlet and outlet temperatures of the brine chiller are easily measured with thermocouples. The mass flow rate of the brine is determined by first measuring the pressure drop across the chiller with a differential pressure transducer. The flow rate through the loop can be correlated to this pressure difference and can therefore be determined at any time by measuring the pressure difference.

The refrigeration loads of the walk-in chest and the display case are determined from:

$$\dot{Q}_{WCi} = \dot{m}_{WC} \, (H_{out} - H_{in})_{WC} \qquad (4\text{-}5)$$

$$\dot{Q}_{DCi} = \dot{m}_{DC} \, (H_{out} - H_{in})_{DC} \qquad (4\text{-}6)$$

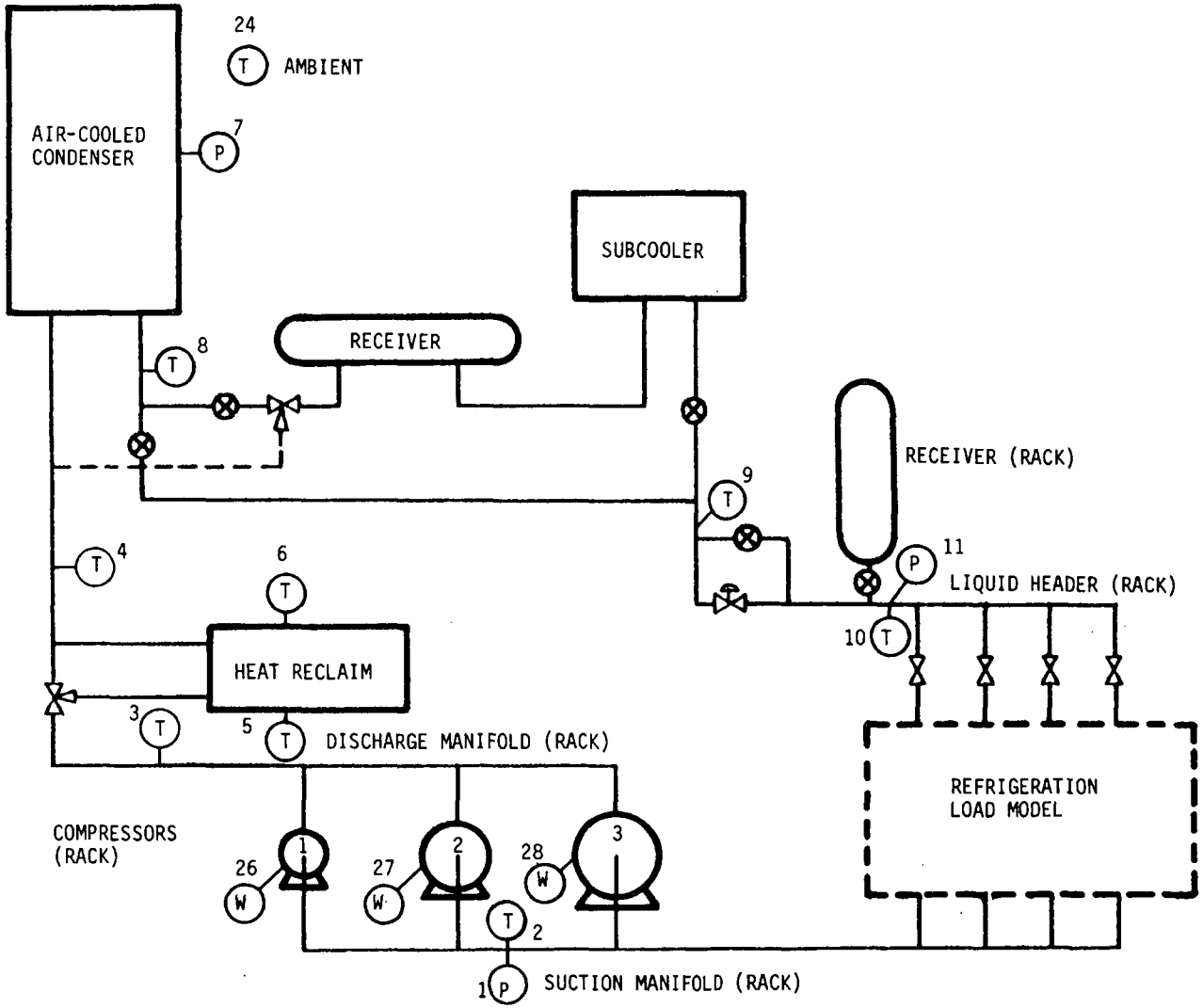

FIGURE 22. - Supermarket refrigeration test system instrumentation.

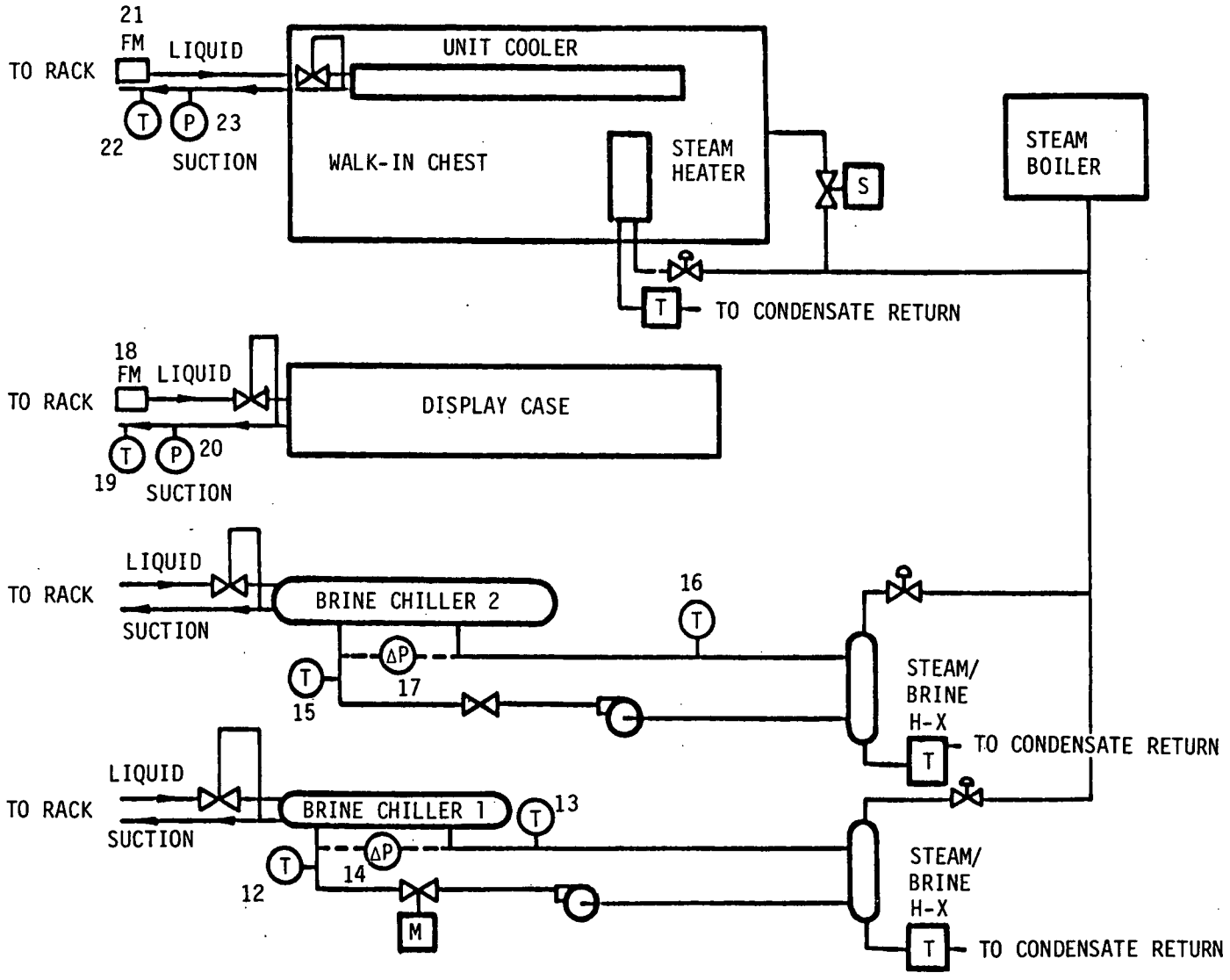

FIGURE 23. - Refrigeration load instrumentation.

where

$\dot{Q}_{WCi}$, $\dot{Q}_{DCi}$ = the refrigeration loads of the walk-in chest and display case, respectively (Btu/hr)

$\dot{m}_{WC}$, $\dot{m}_{DC}$ = the mass flow rates of the refrigerant through the walk-in chest and display case, respectively (lb/hr)

H_{out} = the outlet enthalpy of the refrigerant (Btu/lb)

H_{in} = the inlet enthalpy of the refrigerant (Btu/lb).

The mass flow rate of the refrigerant is measured by a flowmeter located in the liquid line. The inlet and outlet enthalpies are determined by measuring the temperature and pressure at each of these points. The enthalpy can then be found in thermodynamic property tables for the particular refrigerant.

The need to obtain data at many points in the test system at short intervals over long test periods requires that an automatic data acquisition system be established. The existence of the microprocessor further enhances the attractiveness of an automatic system. As a result, all data that are significant to the characterization of system operation and the calculation of the quantities described above must be measured automatically at regular intervals. Electronic data measuring techniques to provide analog signals compatible with the microprocessor include standard components such as thermocouples, pressure transducers, and Watt transducers. In addition, an electronic refrigerant flowmeter will be used in the display case and unit cooler lines. The flowmeter, manufactured by Bearingless, Inc., is a rotating element-type flowmeter which provides accurate measurement at a low pressure drop. Its frequency output must be converted to voltage via a frequency-to-voltage converter for microprocessor compatibility. The lower left portion of Figure 19 shows the electronic measurements input to the analog-to-digital connections of the microprocessor, including the thermocouple reference junction, reference junction temperature, and frequency-to-voltage converter.

The automatically monitored data points are summarized in Table 12. In addition to these measurements, visual output devices such as pressure gauges and digital thermometers will be placed at strategic locations in the test system to allow effective manual setup and operation of the system.

TABLE 12. - Parameters recorded by microprocessor data acquisition system.

Data Point	Measurement	Purpose
1	Pressure, suction header	Capacity control; compressor performance
2	Refrigerant temperature, suction header	System monitoring
3	Refrigerant temperature, discharge header	Heat reclaim performance; system monitoring
4	Refrigerant temperature, entering condenser	Heat reclaim performance, condenser performance
5	Air temperature, heat reclaim inlet	Heat reclaim load
6	Air temperature, heat reclaim outlet	Heat reclaim load
7	Pressure, condenser	Condenser pressure control performance; compressor performance
8	Refrigerant temperature, condenser outlet	Subcooling; system monitoring
9	Refrigerant temperature, liquid line	System monitoring
10	Refrigerant temperature, liquid header	Subcooling; system monitoring
11	Pressure, liquid header	System monitoring
12	Brine temperature, brine chiller 1 inlet	Refrigeration load
13	Brine temperature, brine chiller 1 outlet	Refrigeration load
14	Brine pressure drop, brine chiller 1	Refrigeration load
15	Brine temperature, brine chiller 2 inlet	Refrigeration load

TABLE 12. - Parameters recorded by microprocessor data acquisition system (continued).

Data Point	Measurement	Purpose
16	Brine temperature, brine chiller 2 outlet	Refrigeration load
17	Brine pressure drop, brine chiller	Refrigeration load
18	Refrigerant flow rate, display case	Refrigeration load
19	Refrigerant temperature, display case outlet	Refrigeration load
20	Pressure, display case outlet	Refrigeration load
21	Refrigerant flow rate, unit coolers	Refrigeration load
22	Refrigerant temperature, unit cooler outlet	Refrigeration load
23	Pressure, unit cooler outlet	Refrigeration load
24	Air temperature, outside ambient	Condenser performance
25	Air temperature, indoor ambient	Display case performance
26	Power consumption, compressor 1	Compressor performance; system monitoring
27	Power consumption, compressor 2	Compressor performance; system monitoring
28	Power consumption, compressor 3	Compressor performance; system monitoring
29	Power consumption, total test system	System EER
30	Number of on-cycles, compressor 1	Capacity control monitoring
31	Number of on-cycles, compressor 2	Capacity control monitoring
32	Number of on-cycles, compressor 3	Capacity control monitoring

5. TEST PROGRAM

The equipment designs described in the preceding sections are currently being implemented as the construction and assembly phase of the project continues. Testing of the various systems will proceed according to the test program outlined in this section.

5.1 Test Program Goals

The primary goal of the test program is to provide data on the operation of the new multiple unequal parallel compressor system. Operating data will provide information needed to fine-tune the system design for commercial applications. Data will include demonstration of system capabilities and should document system energy savings. Major goals of the test program can be described as follows:

a. *Test unequal parallel compressor combination* - General operational data for the three-compressor test system will be obtained.

b. *Optimize capacity control algorithm* - All input parameters to the capacity control algorithm, such as cut-in and cut-out pressures, cycle-time delays, compressor-off time delays, etc., will be determined for optimum operation in the general case. If necessary, modifications to the algorithm will be made and tested.

c. *Evaluate the viability of floating condenser pressure operation* - System efficiency obtained under various conditions for floating condenser pressure and ambient subcooling modes will be compared to theoretical efficiencies.

d. *Monitor expansion valve operation* - Both balanced-port and standard expansion valves will be checked for extremely low-load operational characteristics.

e. *Monitor oil flow in system* - Compressor oil level will be monitored in the oil reservoir and at other points in the system to ensure that adequate oil flow is available to all compressors under all conditions.

f. *Obtain general supermarket operating data* - This program presents a rare instance where a completely instrumented supermarket system (albeit simulated) is available for testing. General operating data should be of interest to the supermarket industry.

In addition to the test program major goals described above, there are a number of secondary goals that deserve mention. The existence of a heat reclaim unit presents an opportunity to investigate various modes of heat reclaim operation. Ambient humidity will be monitored to study its effect on evaporator coil loads. Other parameters, such as compressor suction and discharge temperatures, compressor cycling, condenser fan cycling, and defrost efficiency, will also be of interest.

5.2 Experimental Test Plan

The test system offers eight major operating modes, as shown in Table 13. Most of the testing will be performed in the four modes with heat reclaim; if time allows, the additional four modes will be investigated in detail. Each mode can then be subdivided into various operating conditions, depending on system load, defrost method and frequency, capacity control variables, and ambient conditions. All of the above variables, except the ambient conditions, can be set. In order to gain full control over the tests and to enable comparison among tests in spite of variation in ambient conditions, the results of each test will be adjusted to a set of baseline operating conditions, as described in subsection 5.3.

The 5 months allocated to testing have been divided into a 20-week test period. While the first 3 weeks will be primarily system shakedown tests, 14 weeks will be devoted to primary testing and 3 weeks to secondary testing. Primary tests will be general tests performed under automatic system operation, while secondary tests will involve manual operation and monitoring of specific parameters that may be of interest. The four main test periods are described below:

a. *Microprocessor shakedown, system standardization, and consistency tests* - All system components will be checked, reproducibility tests will be run, achievement and maintaining of steady-state operation will be checked. Test duration is 3 weeks.

b. *Microprocessor control variable testing - medium-temperature* - The primary variables in the capacity control algorithm will be investigated. The most important of these variables are compressor cut-in and cut-out pressures, and time delays for cycling of the compressors, checking suction pressures, and cycling of the overall control scheme. These parameters will be varied over their respective ranges, so that proper settings for optimum operation can be developed. The system will be operated at these

TABLE 13. - Test system operating modes

Mode	Evaporator temperature		Condenser controls		Heat reclaim	
	(R-12) medium	(R-502) low	Floating pressure	Ambient subcooling	Yes	No
1	X		X		X	
2	X		X			X
3	X			X	X	
4	X			X		X
5		X	X		X	
6		X	X			X
7		X		X	X	
8		X		X		X

settings for a minimum of 2 weeks. These tests are part of the primary test period; during these tests complete system operation will be carefully monitored and documented. Test duration is 8 weeks.

c. *Microprocessor control variable testing - low-temperature* - The same procedure will be followed as for the medium-temperature tests described above. Information gained during medium-temperature tests should speed the accomplishment of the low-temperature tests. Test duration is 6 weeks.

d. *Miscellaneous operational tests* - These secondary tests will be performed under manual system operation as necessary to clarify or improve the performance of a particular system or component. While testing of this type will probably be interspersed among the primary tests, 3 weeks are allocated for these tests.

While the major thrust of experimental testing will be the optimization of the control system parameters, a complete set of system operating data will be taken during each test. Thus, detailed performance data on condenser pressure, oil flow, defrost and other parameters of interest will be available over a wide range of operating conditions.

Typical test conditions are listed below:

Test duration:	24 hr; 48 hr
Data sampling frequency:	1 to 5 min
Defrost cycles:	2 (minimum)
Automatic operation:	All primary tests.

While 1-day tests will be preferable, 2-day tests will have to be considered if system response to changes in conditions is too slow. Defrost cycles are an important test parameter; the most significant load variations often occur as units go into or come out of defrost. Frost buildup requires long time periods; it may become the criterion for a minimum test period. From conversations with supermarket engineers, a 1-day test period is the absolute minimum for reliable data on a typical supermarket system. The cassette recorder has the capability for over 48 hr of data readings at 1-min intervals. It is reasonable to use this capability to the utmost to ensure that no short-term variations in the system escape notice. All primary tests will be run under automatic operation to ensure compatibility and consistency among the tests.

5.3 Data Reduction

Complete characterization of the operation of the test system includes information on the following parameters:

a. Refrigeration loads

b. Compressor and miscellaneous power consumption

c. Temperatures and pressures at various points in the system

d. Number of compressor on/off cycles and total elapsed running time.

A total of 32 measurements, as shown in Table 12, will automatically be recorded at each desired interval via the microprocessor data acquisition system. In addition, other measurements, such as ambient temperature and humidity, and additional system pressures, will be recorded manually. A data reduction computer program will be developed to reduce all these data to a tractable form for interpretation.

The data reduction computer program will perform the following functions:

a. Read data tape generated by microprocessor system

b. Establish and store data arrays

c. Perform calculations averaging all data over the test run-time

d. Adjust calculated EER to base conditions for comparison purposes

e. Allow selection of particular parameters for detailed printout.

While results averaged over the test run-time will be automatically printed out, the program will print out detailed data only if prompted. The program will print out any one parameter, or group of parameters, at any desired time interval. Thus, for example, time variation of refrigeration load can be compared to variation in suction pressure for a particular time interval.

All test conditions, except ambient temperature and humidity, can be carefully set to minimize the effects of extraneous variables on the particular variable of interest, usually compressor or system EER. To account for variations in ambient

conditions, the calculated EER's will be adjusted to correspond to a base ambient condition. This will be accomplished by modeling compressor performance using the Phase I computer program in conjunction with the Copeland performance curves for the compressors. All tests can then be arranged such that all results are compatible regardless of ambient conditions.

HIGHLY ENERGY-EFFICIENT

SUPERMARKET SYSTEMS

Task 2 Report

DISPLAY CASE ANALYSIS AND DESIGN STUDY

TABLE OF CONTENTS

Display Case Analysis and Design Study

Section		Page
1.	INTRODUCTION	3-1
2.	DISPLAY CASE DESCRIPTION	3-2
2.1	General Information	3-2
2.2	The Open Tub Case	3-4
3.	DISPLAY CASE COMPUTER MODEL DESCRIPTION	3-7
3.1	Subroutine Description - Open Tub Applications	3-7
3.1.1	TUB	3-7
3.1.2	DATAON	3-12
3.1.3	COMWAL	3-12
3.1.4	LSRES	3-13
3.1.5	OPNTOP	3-16
3.1.6	EVAPR	3-16
3.2	Description of Other Subroutines	3-17
3.2.1	AIRCTN	3-17
3.2.2	OPNDOR	3-17
3.3	Model Capabilities	3-17
3.4	Model Validation	3-18
4.	MODEL RESULTS AND SENSITIVITY ANALYSIS	3-22
4.1	Heat Gain Distribution	3-22
4.1.1	Radiation	3-22
4.1.2	Mixing and Moisture Entrainment	3-22
4.1.3	Wall Conduction	3-24
4.2	Air Mass Flow Effects	3-24
4.3	Store Temperature Effects	3-24
4.4	Evaporator Size	3-24

TABLE OF CONTENTS (Continued)

Section		Page
5.	POSSIBILITIES FOR FURTHER DISPLAY CASE ANALYSIS AND DESIGN WORK	3-29
5.1	Refinements to the Tub Display Case Model	3-29
5.2	Extension of Model to Other Display Case Types	3-29
5.3	New Innovative Display Case Designs	3-30
6.	CONCLUSIONS AND RECOMMENDATIONS	3-31
6.1	Conclusions	3-31
6.2	Immediate Recommendations	3-31
6.3	New Design Concepts	3-33
7.	REFERENCES	3-37
	APPENDIX A - DISPLAY CASE COMPUTER PROGRAM SAMPLE RUN	3-38

LIST OF ILLUSTRATIONS

Figure		Page
1	Display case types	3-3
2	Scale schematic of open tub display case	3-5
3	Locations of labeled air and refrigerant conditions	3-8
4	Flowchart for main calling program TUB	3-9
5	Energy balance of tub display case: control volume analysis	3-10
6	Thermal resistance model of typical display case wall	3-14
7	Thermal resistance model for the liquid-suction heat exchanger tube	3-15
8	Tub type display case measurement locations	3-19
9	Total tub type display case heat gain and fraction of gain versus air mass flow rate	3-25
10	Tub type display case heat gain due to air mixing versus air mass flow rate	3-26
11	Tub type display case heat gain due to wall conduction and moisture entrainment versus air mass flow rate	3-27
12	Tub case with radiation shield	3-34
13	Radiation shields for multi-deck cases	3-34
14	Double-door reach-in merchandizer	3-35
15	Low air flow tub case design	3-36
A-1	Listing of a sample run	3-39

LIST OF TABLES

Table		Page
1	Distribution of refrigerated display case types in a typical supermarket	3-4
2	Definition of symbols in Figure 5	3-11
3	Model verification (Refrigerant 502)	3-21
4	Tub case heat gain distribution	3-23
5	Tub case evaporator load distribution	3-23
6	Case heat gains as a function of store temperature	3-28
7	Tub case evaporator performance	3-28
A-1	List and definition of output variables	3-46
A-2	List and definition of input variables	3-48

1. INTRODUCTION

Supermarket energy consumption is tied directly to the design and utilization of refrigerated display cases. Yet, display case design still seems to be more an art than a science, influenced by merchandisers, store managers, and designers rather than engineers. Little public literature is available, and most manufacturers base their designs on proprietary data taken in their own test laboratories. While some theoretical work has been done on air curtains, evaporator designs, frost buildup and other aspects of display cases, the practical application of this work has not been publicized.

The objective of this study was to examine the display case as an energy system and to identify the major heat loads and characterize their variation with different case designs and ambient conditions. This study provides a fundamental, unbiased evaluation of display case performance. Once the major heat loads were described, design improvements were suggested to improve the overall performance of the display case.

The characterization of display case heat loads was addressed by the development of a computer model of a display case. A computer approach was chosen because of its general applicability, value in performing parametric studies, and its utility as a design tool in the future. Using the first law of thermodynamics, the model performs energy balances on the display case and on its various subsystems to determine display case performance. With a complete, validated model, a parametric sensitivity analysis was performed, studying case performance while varying operating conditions such as air flow rate, food product temperature, ambient temperature, etc. Results of the parametric study were then used as a basis for recommendations and design improvements.

Sections 3 through 6 describe the development, its applications, and capabilities of the computer model, and discuss some of the results obtained utilizing the model. Section 2 provides a brief overview of the different types and applications of display cases.

2. DISPLAY CASE DESCRIPTION

2.1 General Information

Display cases are insulated shells constructed primarily of sheet metal and polyurethane foam on a wood or metal frame. Refrigerated air is circulated within the shell and across any opening. The three major display case designs are shown in Figure 1. The open, or tub case, also known as a chest or coffin-type case is the original frozen food case. It is relatively economical and efficient to operate since the cold air tends to remain in the chest. Uniform low temperatures are relatively easy to achieve, protecting product quality; stocking is easy. Disadvantages of the open tub are primarily in merchandising: tub cases take more floor space per display space, and the horizontal product surface is not easily in the customer's view.

The multi-deck display case, extremely popular during the last 20 years, primarily offers merchandising advantages. The display space per floor space is high, product is at consumer eye level, and stocking is easy. However, this case is thermally inefficient, expensive to operate, and results in cold aisles due to air spillover. While display space per linear foot is less than twice that of tub cases, the energy consumption is four times as high.

The glass door merchandizer, or reach-in, began as a multi-deck case with doors. Its popularity has increased over the last few years because of rising energy costs. Advantages are that more product can be stocked and displayed than in a tub case, at efficiencies greater than in a multi-deck case. However, doors are considered a possible selling barrier, particularly when product visibility is blocked by frost or glare. Furthermore, doors must often be heated, stocking is somewhat difficult, and product visibility decreases as the product sells down.

Table 1 describes the distribution of display cases in a typical new supermarket, based on data from supermarkets opened in 1978 (1). It is evident that on a linear foot basis, the open tub case is the primary refrigerated case in use in the supermarket industry, including single-deck and service meat cases and tub frozen food cases. Second in total linear footage (although first on a total display space or energy consumption basis) is the multi-deck. The glass door case is third but making significant inroads in the frozen food category. If all existing stores were included in the survey, the glass door case would represent a much smaller part of the total. However, in recent years their energy efficiency has made glass door reach-ins

OPEN TUB

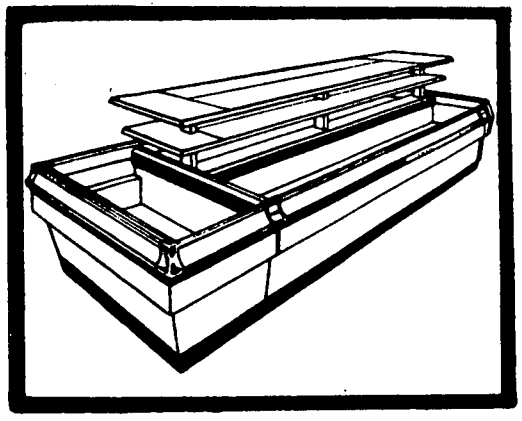

GLASS DOOR REACH-IN

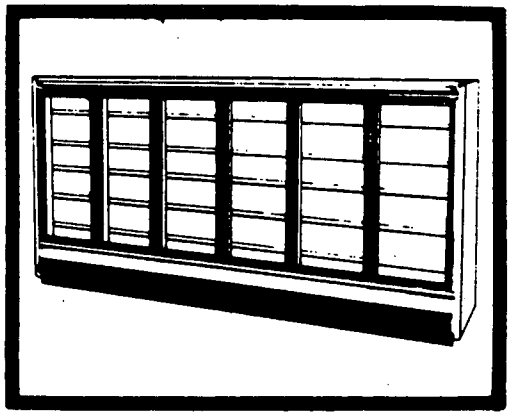

MULTI DECK - AIR CURTAIN

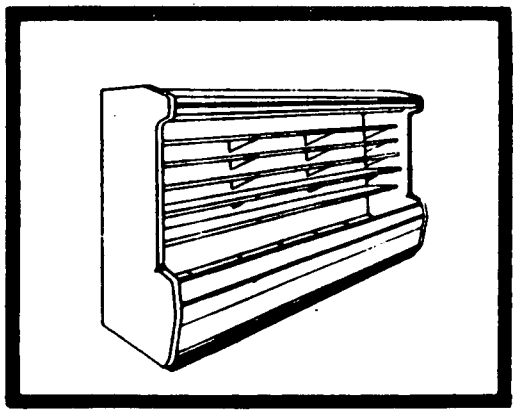

FIGURE 1. - Display case types.

TABLE 1. - Distribution of refrigerated display case types in a typical supermarket (1)

Category	Display case type	Proportion of total linear floor footage per category (%)	Proportion of total linear floor footage per store (%)
Frozen food	Open tub	58	41
	Glass door reach-in	29	
	Multi-deck	13	
Meat	Single-deck	53	24
	Multi-deck	24	
	Service meat	23	
Dairy	Multi-deck	86	17
	Glass door reach-in	9	
	Other	5	
Produce	Refrigerated produce case	100	18

increasingly popular. Furthermore, contrary to expectation, some stores have found that installation of reach-ins has actually increased frozen food sales. It is surmised that closed doors prevent cold aisles, increasing the length of time shoppers spend in the frozen food section, resulting in an increase in sales volume.

2.2 The Open Tub Case

A discussion of the open tub case as shown in Figure 2 will serve to provide a general description of display case design. The food area is a sheet steel enclosure separated from the sheet steel air duct by a small air gap. Polyurethane insulation is foamed in the area between the air duct and the outer steel sheet, and is important structurally as well as thermally. The front of the case usually has decorative molding of steel or aluminum. Fan and evaporator placement vary with case and manufacturer. A honeycomb-type section is used at the discharge air duct to minimize turbulence and therefore mixing. The return air duct is slightly lower than the discharge duct, and a deflector is mounted to prevent cold-air spillover. Some cases are designed with the discharge duct on the aisle side of the case so that air flows away from the aisle to prevent spillover.

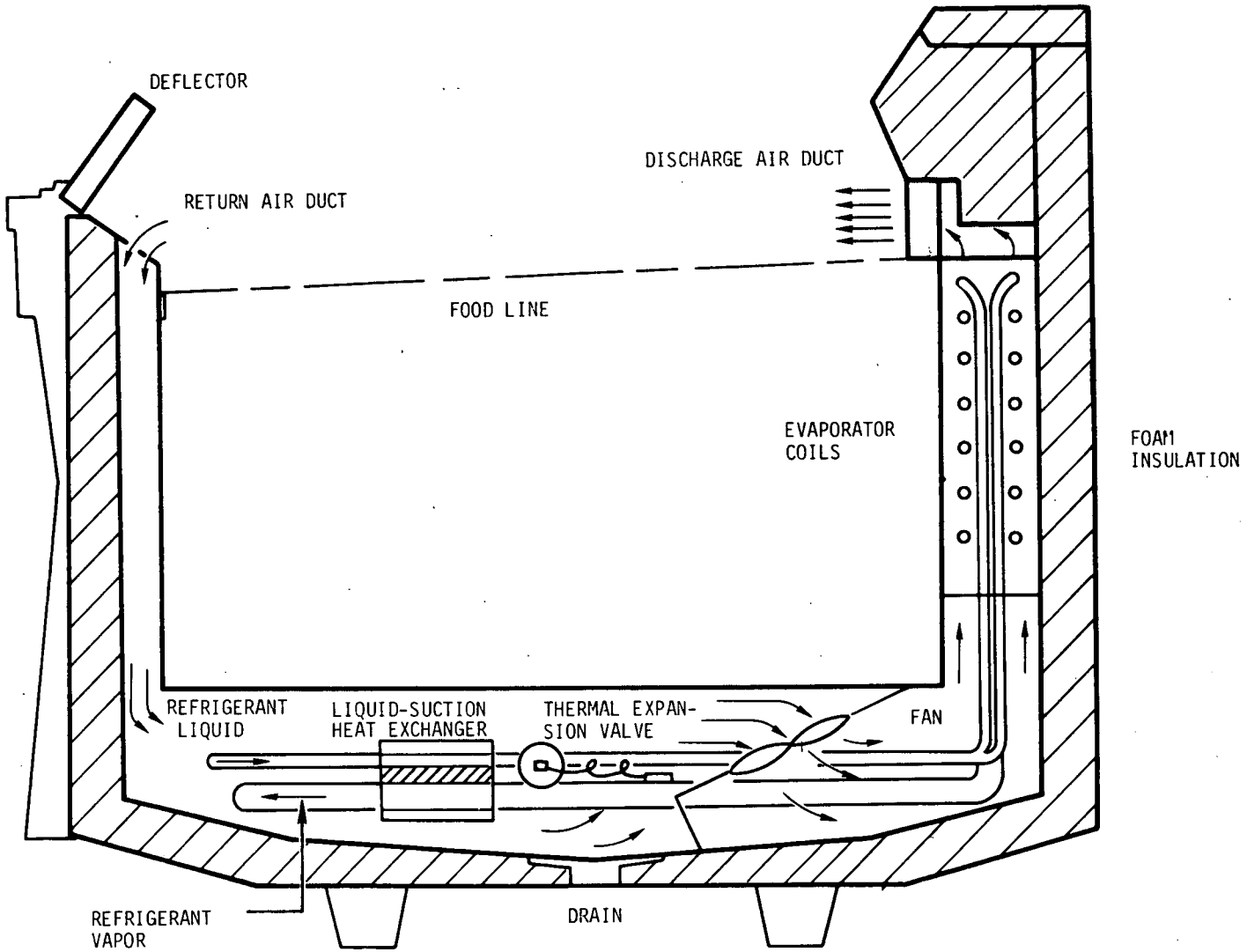

FIGURE 2. - Scale schematic of open tub display case.

The evaporator is a series of copper tubes spanning the length of the case. Square, ribbed aluminum fins are spaced at a pitch of 2-1/2 fins per inch. The liquid suction heat exchanger consists of parallel, adjacent liquid and vapor tubes, welded together over a certain length. The purpose of the liquid-suction heat exchanger is to precool the liquid refrigerant prior to expansion so that more refrigeration will be available at the evaporator. This is accomplished by allowing the low pressure, low temperature refrigerant exiting the evaporator to come into thermal communication with the high pressure, high temperature liquid refrigerant.

3. DISPLAY CASE COMPUTER MODEL DESCRIPTION

The display case model package developed in the course of this study is a collection of individual subroutines dedicated to various display case subsystems. For example, separate routines were written to model a composite wall, evaporator, liquid-suction heat exchanger, air curtain, opening door, etc. The proper combination of routines could then be put together to model any type of display case. Budget and time constraints, especially the painstaking procedure of taking laboratory measurements to validate the model, precluded the completion of a general model for all display case types. Because of the widespread usage and simpler design of the tub case, the tub model was completed and validated. While routines pertaining to other case types are also included in the model package, and described below, they have not all been tested and validated.

3.1 Subroutine Description - Open Tub Applications

Subroutine programs modelling various display case components and subsystems are described below. These subroutines are all used in the analysis of the tub case; they have been tested with simulated data and validated with actual measured data.

3.1.1 TUB

Program TUB is the main calling routine which coordinates calculations for the open tub display case. It employs a control volume analysis based on the first law of thermodynamics, calling various subroutines and using their results to analyze a tub-type display case. Results of the TUB analysis are refrigerant conditions and air temperatures calculated at various points in the display case. In addition, TUB compiles and prints results from the individual subroutines.

Locations where air or refrigerant conditions are set or calculated by TUB are shown in Figure 3. Figure 4 presents a general flowchart for TUB. Referring to Figures 3 and 4, the operation of TUB can be explained as follows. DATAON is called to read the input parameters. Input refrigerant conditions are evaporator pressure, p_5, and condenser saturation temperature, T_3. Air temperature at all locations is initialized at 5^oF higher than the evaporator saturation temperature, T_6. Air flow rate and moisture content for both store and case air are the final inputs. Figure 5 describes the division of the tub case into four control volumes, and labels the corresponding heat fluxes. Table 2 defines the various thermodynamic terms used in Figure 5. OPNTOP is called to determine heat gain

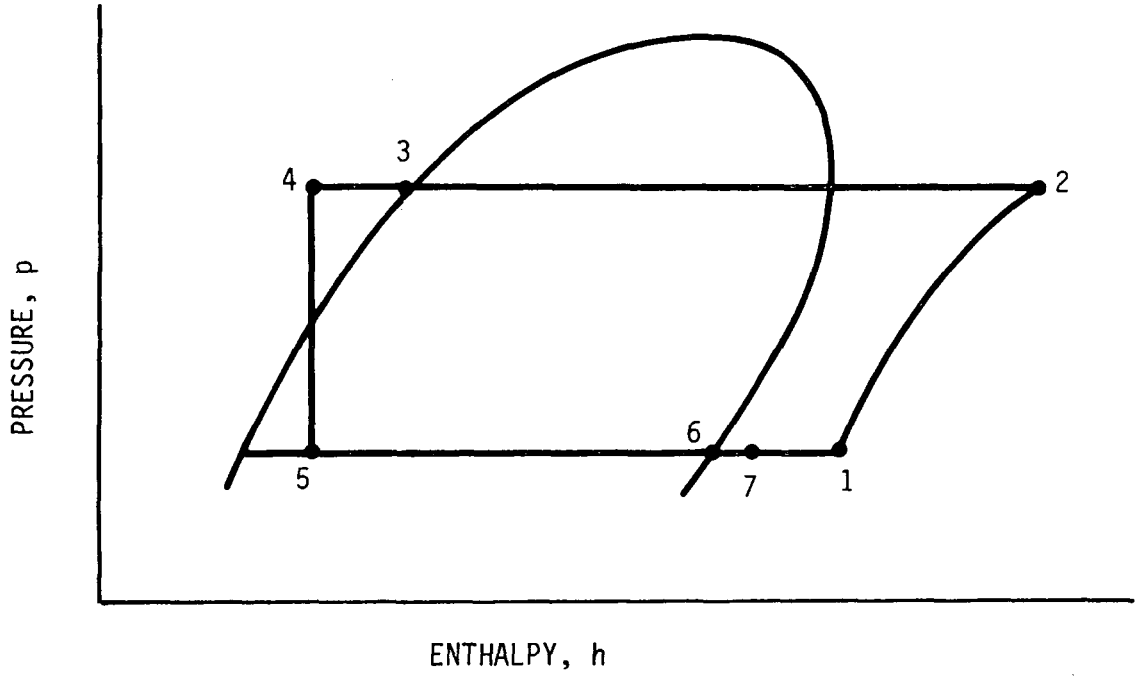

a) PRESSURE-ENTHALPY DIAGRAM

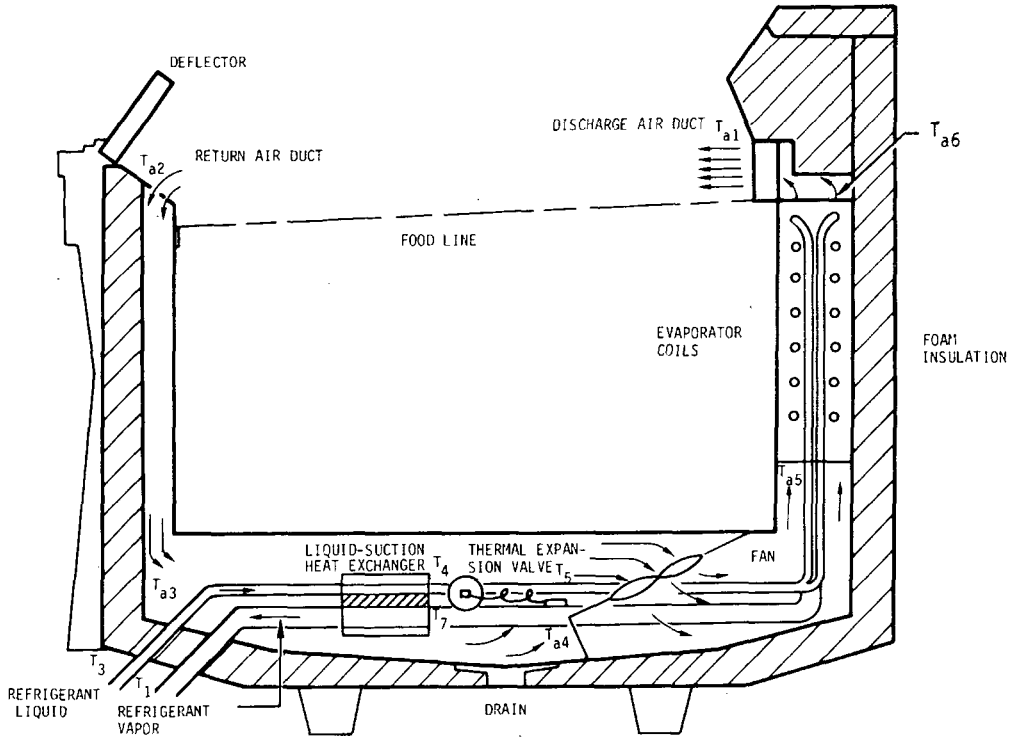

b) OPEN TEST DISPLAY CASE

FIGURE 3. - Locations of labeled air and refrigerant conditions.

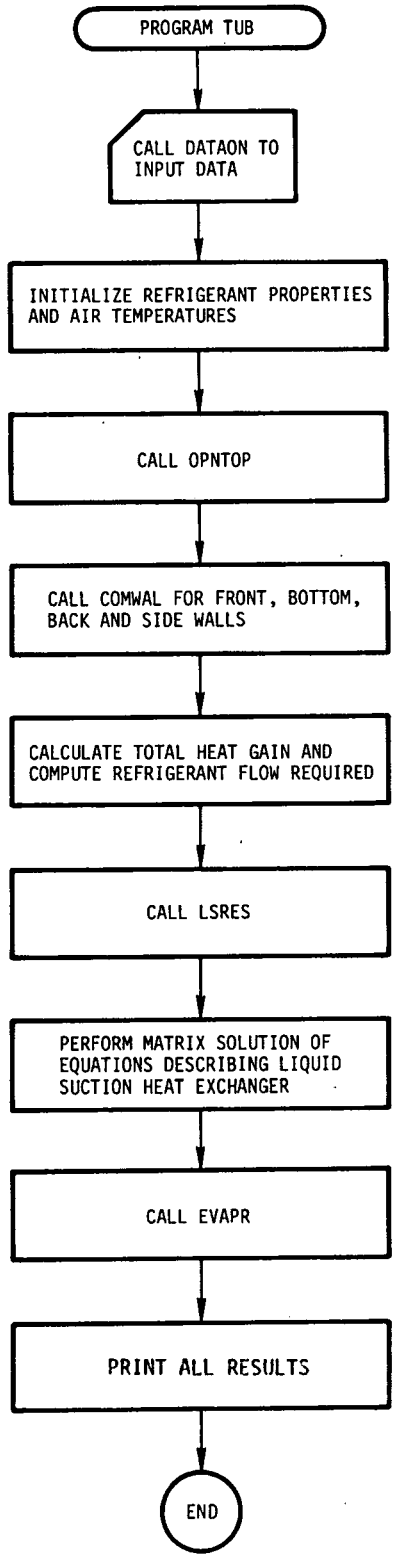

FIGURE 4. - Flowchart for main calling program TUB.

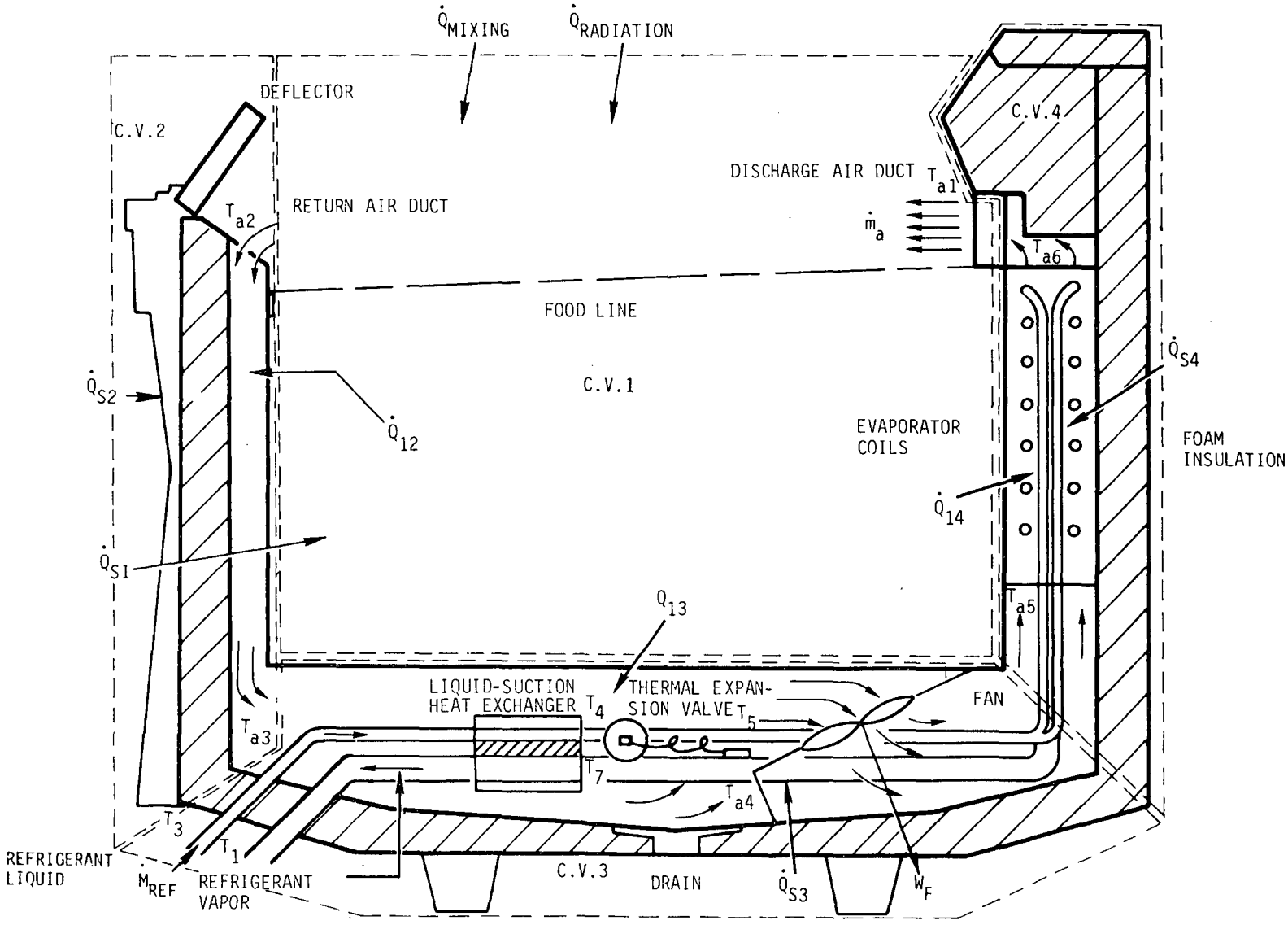

FIGURE 5. - Energy balance of tub display case: control volume analysis.

TABLE 2. - Definition of symbols in Figure 5

Symbol	Definition
C.V.	Control volume
$\dot{m}_a$	Air mass flow rate
$\dot{m}_{REF}$	Refrigerant mass flow rate
$\dot{Q}_{MIXING}$	Heat flux due to air mixing and moisture entrainment
$\dot{Q}_{RADIATION}$	Heat flux due to radiative exchange between food surface and store ceiling and walls
$\dot{Q}_{12}$, $\dot{Q}_{13}$, $\dot{Q}_{14}$	Heat fluxes from control volume 1 to control volumes 2, 3, or 4
$\dot{Q}_{S1}$, $\dot{Q}_{S2}$, $\dot{Q}_{S3}$, $\dot{Q}_{S4}$	Heat fluxes from store to control volumes 1, 2, 3, or 4
T_1	Refrigerant liquid temperature entering display case
T_3	Refrigerant vapor temperature leaving display case
T_4	Refrigerant liquid temperature after liquid suction heat exchanger, before expansion valve
T_5	Refrigerant temperature after expansion valve, entering evaporator
T_7	Refrigerant vapor temperature, evaporator outlet, liquid suction heat exchanger inlet
T_{a1}	Discharge air temperature
T_{a2}	Return air temperature
T_{a3}	Air temperature entering control volume 3
T_{a4}	Air temperature after liquid suction heat exchanger
T_{a5}	Air temperature, evaporator inlet
T_{a6}	Air temperature, evaporator outlet

into the top by radiation, ($\dot{Q}_{RADIATION}$), and mixing, ($\dot{Q}_{MIXING}$). COMWAL is called separately for each wall section to determine heat fluxes through the walls, $\dot{Q}_{S1}$, $\dot{Q}_{S2}$, $\dot{Q}_{S3}$; air temperatures at the proper locations are refined after each call. A sum of all the heat gains to control volume 1 yields the total required refrigeration, Q_{REQ}. Refrigerant mass flow is then calculated from

$$\dot{m}_{REF} = \dot{Q}_{REQ}/(h_1 - h_3). \tag{3-1}$$

where h_3 and h_1 are the enthalpies of the refrigerant entering and exiting the display case, respectively.

Knowing the refrigerant flow rate, the liquid suction heat exchanger can be analyzed. Three simultaneous nonlinear equations describing liquid-to-air heat exchange, liquid-to-vapor heat exchange, and liquid heat balance are solved by a matrix inversion method to determine refrigerant and air conditions on either side of the heat exchanger. Finally, program control is turned over to subroutine EVAPR which uses the refrigerant and air mass flows and exit conditions from the liquid-suction heat exchanger to calculate the evaporator characteristics. In the current version of the program, control returns to TUB for the final print and the program stops. A provision has been made to return control to the beginning of the heat gain calculation (call OPNTOP), using the new air and refrigerant conditions just calculated, rather than the original estimates. This procedure would slightly refine all the heat gains and air and refrigerant conditions. This provision has not been fully tested and is not included in the results presented in this report.

3.1.2 DATAON

Subroutine DATAON serves to read the input files, initialize variables, perform initialization calculations, and print out an echo of the input. DATAON also provides a description of input variables. The portion of DATAON working with evaporator inputs has been adapted from the input subroutine used in the Oak Ridge National Laboratory (ORNL) Heat Pump Model (2).

3.1.3 COMWAL

Subroutine COMWAL models steady-state conduction heat transfer through composite walls of display cases. Primary inputs are wall dimensions, thicknesses and conductivities of the composite materials, and temperatures on either side of the walls under consideration. Where a wall includes an air duct, the wall is separated into two walls bounded by the duct; the convection heat transfer

coefficient due to the duct airflow is calculated. Natural convection heat transfer coefficients are calculated on the surfaces of both vertical and horizontal walls. For greater accuracy, COMWAL can calculate radiation heat transfer from the outside wall surface to an imaginary surface, whose radiation characteristics can be input, based on estimates of local conditions. COMWAL output includes the heat flux through the wall, and wall surface temperature. The heat transfer resistances occurring at the display case walls are illustrated in Figure 6.

3.1.4 LSRES

Subroutine LSRES is designed to calculate heat transfer resistances of interest in the analysis of the liquid-suction heat exchanger tube. The heat exchanger is assumed to be of simple design: parallel liquid and vapor tubes are welded together over a certain length. The length of the weld determines the length of the heat exchanger. This is a typical design used in display cases. Some manufacturers also use concentric tube heat exchangers, but those are not addressed here.

Because the thermal resistance between the refrigerant vapor and tube wall is significantly greater than the thermal resistance between the air and tube wall, nearly all of temperature decrease experienced by the air is due to the refrigerant liquid. Consequently, the larger vapor tube is treated as a fin on the smaller diameter liquid tube. Based on tube characteristics and air and refrigerant flow conditions, conduction and convection heat transfer coefficients are combined to result in two overall thermal resistances: liquid-to-air and liquid-to-vapor.

These two thermal resistances are then used in the overall heat balance calculation for the liquid-suction heat exchanger performed in subroutine TUB and described in the corresponding paragraph below. The thermal resistance model used for the liquid-suction heat exchanger tube is illustrated in Figure 7.

Vapor-to-air thermal resistance is assumed to be significantly greater than other thermal resistances shown in Figure 7. The heat transfer analysis revealed that the thermal resistances

- Vapor tube to air
- Vapor tube to liquid tube

are less than the thermal resistance, vapor tube to vapor flowing within the tube. As a result the heat transfer between liquid and air occurs only via the vapor tube, and the vapor within the tube does not experience heat transfer with the air. This heat transfer analysis supported the previous assumption that the larger vapor tube may be treated as a fin on the smaller diameter liquid tube.

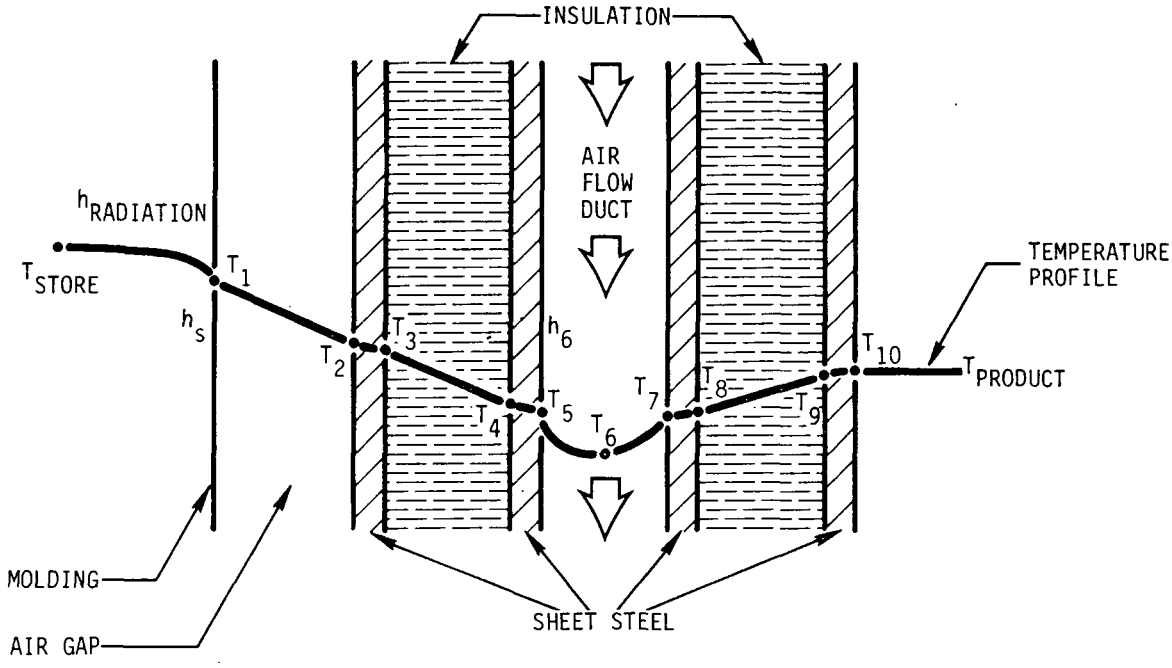

$$\dot{Q}_{S-6} = \frac{1}{\sum_{s-1}^{5-6} R} A \left(T_{STORE} - T_6\right)$$

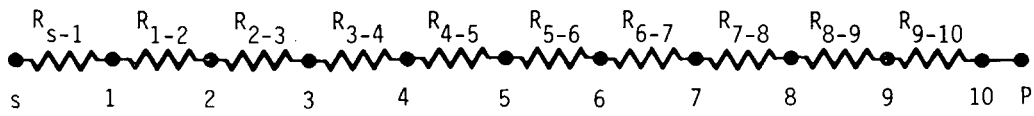

$$R_{s-1} = \frac{1}{h_s + h_{RADIATION}} \qquad R_{5-6} = R_{6-7} = \frac{1}{h_6}$$

$$R_{1-2} = \frac{t_{1-2}}{K_{1-2}} \qquad R_{7-8} = \frac{t_{7-8}}{K_{7-8}}$$

$$R_{2-3} = \frac{t_{2-3}}{K_{2-3}} \qquad R_{8-9} = \frac{t_{8-9}}{K_{8-9}}$$

$$R_{3-4} = \frac{t_{3-4}}{K_{3-4}} \qquad R_{9-10} = \frac{t_{9-10}}{K_{9-10}}$$

$$R_{4-5} = \frac{t_{4-5}}{K_{4-5}}$$

WHERE:

$\dot{Q}$ = HEAT FLUX

R = HEAT TRANSFER RESISTANCE

T = TEMPERATURE

h = CONVECTION HEAT TRANSFER COEFFICIENT

K = THERMAL CONDUCTIVITY

t = WALL THICKNESS

FIGURE 6. - Thermal resistance model of typical display case wall.

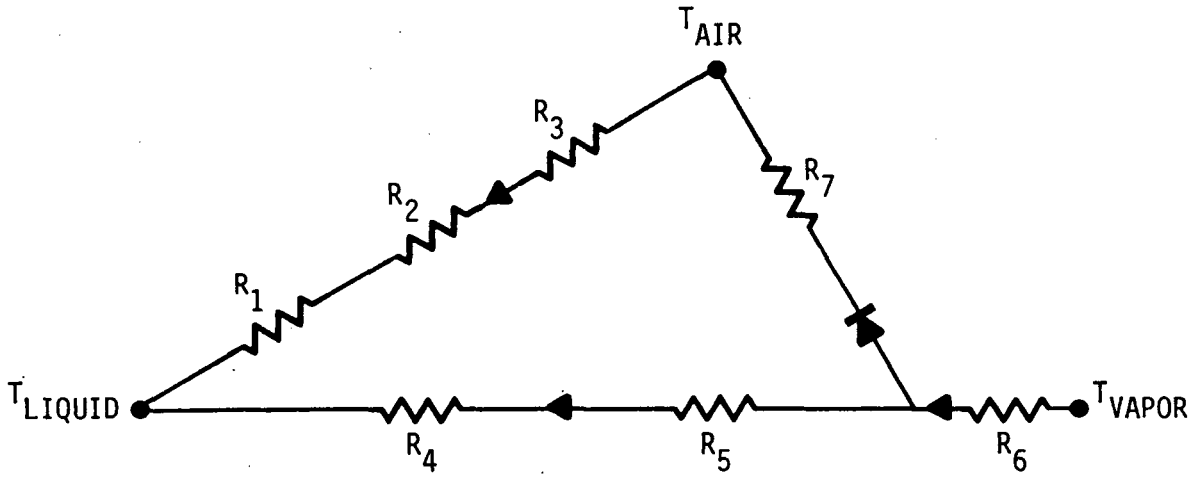

RESISTANCES

R_1 - FILM COEFFICIENT, REFRIGERANT LIQUID TO LIQUID TUBE

R_2 - CONDUCTION ACROSS TUBE SHELL

R_3 - FILM COEFFICIENT, LIQUID TUBE TO AIR

R_4 - FILM COEFFICIENT, REFRIGERANT LIQUID TO TUBE, INCLUDING FIN EFFICIENCY OF THE VAPOR TUBE

R_5 - CONDUCTION ACROSS BOTH LIQUID AND VAPOR TUBES

R_6 - FILM COEFFICIENT, VAPOR TUBE TO REFRIGERANT VAPOR

R_7 - FILM COEFFICIENT, VAPOR TUBE TO AIR

FIGURE 7. - Thermal resistance model for the liquid-suction heat exchanger tube.

3.1.5 OPNTOP

Subroutine OPNTOP calculates the heat transfer through the open top of a tub or chest-type display case. Input variables include detailed physical specifications, air flow characteristics, temperatures, humidities, and radiation characteristics. The subroutine output is heat flux composed of sensible heat transfer due to air mixing at the surface, latent heat transfer due to moisture entrainment, and radiation heat transfer.

Air flow across the open top is modeled by assuming a laminar boundary layer at the interface between the refrigerated air and the entrained ambient air and using the analysis of Lock (3). Resulting temperature, velocity, and moisture concentration profiles are then integrated to determine cumulative effects. It is assumed that all the mixed air is routed through the return duct and none spills out of the case. This assumption was verified experimentally as explained in subsection 3.5.

Since the moisture entrainment calculated in this analysis is high compared to measured moisture removal, an empirical multiplicative factor is used in the moisture flow rate calculation for compatibility with measurements. Radiative heat transfer between food and ceiling is calculated based on input values of radiation shape factor and food package emissivity, assuming ceiling temperature is 10°F above store ambient temperature.

3.1.6 EVAPR

Subroutine EVAPR and its associated subroutines, which comprise the evaporator model, are taken directly from the ORNL Heat Pump Model (2). Only minor changes were made to adapt to the variables used in the current display case model. Capability was extended to include refrigerants 12 and 502 as well as the original refrigerant 22 by writing an additional subroutine to calculate refrigerant thermophysical properties. The evaporator routines are from the May, 1979 version of the Heat Pump Model. This version occasionally has difficulty with convergence in the evaporator moisture removal section. However because of the moisture entrainment assumption outlined above, it was not necessary to employ the evaporator moisture removal section of the ORNL Heat Pump Model.

The evaporator model requires as inputs a complete physical characterization of the evaporator tubes, fins, flow passages as well as inlet refrigerant and air conditions. The model calculates air-side heat transfer coefficients, refrigerant two-phase and single-phase heat transfer coefficients, heat exchanger effectiveness, and moisture removal. Final outputs are air and refrigerant outlet conditions and evaporator heat load. Subroutines comprising the evaporator model include routines to calculate fin efficiencies, refrigerant and air pressure drops, heat exchanger effectiveness and various property routines.

3.2 Description of Other Subroutines

The two subroutines described below were written early in the program, before work focused on the tub case. Although these routines were not validated with test data, they are both substantiated by previous data of other investigators, and are presented as part of the model package because of their utility to future work. The analyses performed during the writing of these routines have been of use to this project and will be discussed in further sections.

3.2.1 AIRCTN

Subroutine AIRCTN is written to calculate the heat transfer through a single-layer air curtain of given dimensions and air conditions based on an analysis by Hayes and Stoecker (4). For given dimensions and temperature differences, this routine will compute the minimum required outlet air velocity, the heat transfer coefficient across the air stream, and the total heat transfer through the air curtain, including sensible and latent heat transfers.

3.2.2 OPNDOR

Subroutine OPNDOR calculates the heat flux when a vertical sliding door is partially or completely opened, and remains open for a short period of time. The routine is based on a steady-flow model of a gravity-induced flow. Input parameters are air temperature and humidity conditions, door height, width of door opening; output is a rate of heat flow, including sensible and latent heat transfers. Velocity profiles are based on the density differences; thus, time spans must be short (10 to 15 sec) for the steady-flow assumption to be valid. An empirical factor derived from Asker and Berner (5) is included in the heat flux formulation.

3.3 Model Capabilities

The model, although not in polished form, has valuable application in display case analysis. As described in the previous subsection, the tub display case model alone encompasses the following capabilities:

a. Complete thermophysical properties for refrigerants 12, 22, and 502

b. Effects of store humidity and temperatures, including ceiling temperature

c. Display case air flow effects

d. Analysis of heat gain through open top, including radiation, mixing, and moisture effects

e. Analysis of any composite wall of the display case, including heat transfer by natural and forced convection and radiation

f. Complete evaporator analysis

g. Optional analysis of liquid-suction heat exchanger.

The model can be applied in several ways. It is valuable as a design tool, allowing various display case design configurations to be analyzed with respect to energy efficiency. While the model is currently set up to input the air flow rate, liquid-suction heat exchanger and evaporator characteristics, it could easily be modified to calculate iteratively the optimum air flow rate or provide heat exchanger or evaporator size for given design and ambient conditions. The model is also valuable as a tool for performing sensitivity analyses, such as the one described in Section 4 of this report. Case performance can be evaluated with respect to any number of parameters, from store conditions to evaporator configuration. In addition, the model can be used to analyze a particular component, such as the evaporator, independent of the other components.

It should be noted that except for the analysis of the heat gain through the open top, the subroutines in this model describe components that are common to all types of display cases. Thus, with the completion of the tub model, a major step has been taken to provide models of all the different display case types. The tub display case model can be used as a basis for models of any other display case.

3.4 Model Validation

Confidence in the use of a model requires careful validation of the model with experimental data obtained under various operating conditions. A 12-ft tub display case of typical Friedrich design was installed and instrumented at the Friedrich Testing Laboratory in San Antonio, TX. Measurements and their locations are shown in Figure 8. These were taken at one cross section near the center of the case, between two fans which were spaced approximately 6-ft apart. Measurements were taken under several conditions: case empty and steady-state; case full and transient cooling down; and case full and steady-state. Although the last condition is the most desirable, insufficient data was available at the time of this writing. Thus comparison between model calculations and actual measurements was based on the first condition--steady-state cooling with case empty.

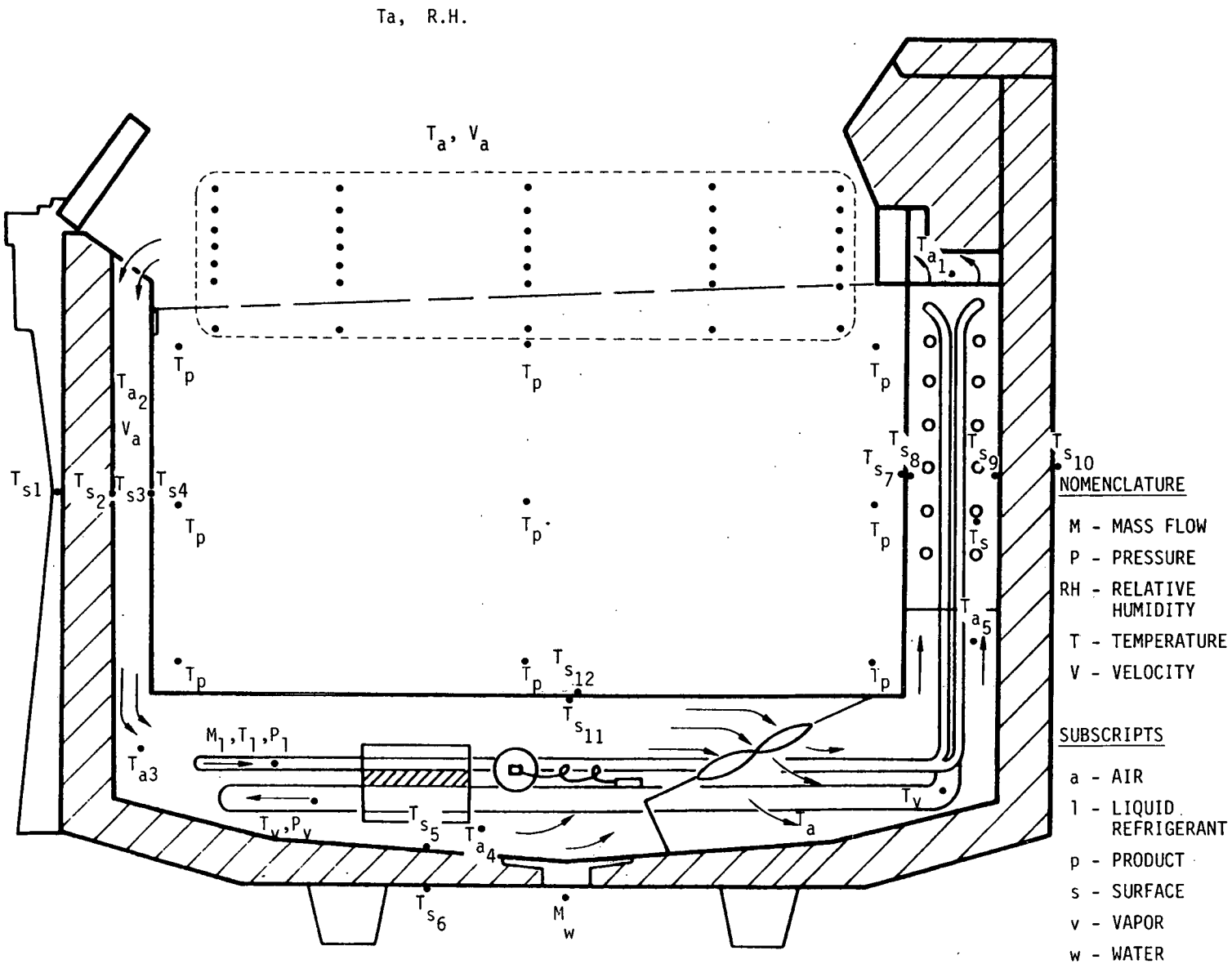

FIGURE 8. - Tub type display case measurement locations.

Results from laboratory measurements and computer calculations are compared in Table 3. The conduction calculations for wall temperatures and heat gain show good agreement with measurements. That the calculated condition and total heat gains are very close to the measured values indicates that the sum of radiation and mixing heat gains must also be very close. However, the relative amounts of radiation and mixing heat gains were not verified with measurement as of this writing. Such a verification will require a detailed analysis of the temperature and velocity profiles across the top of a full case operating at steady-state conditions.

Calculated refrigerant flow rate calculated based on the total heat gain is within 4.6 percent of the measured value. Refrigerant conditions at the liquid-suction heat exchanger are also close, although it was noted that the computer calculations consistently showed the heat exchanger performance to be better than measured.

Refrigerant conditions at the liquid-suction heat exchanger are also close, i.e., the differences between the computer calculated values and laboratory measured values for the liquid outlet temperature and for vapor outlet temperature are 4°F and 6°F, respectively. Because the model predicts a lower value for the liquid outlet temperature and a higher value for the vapor outlet temperature as compared to the respective laboratory measured values indicates that the model assumed a more energy-efficient liquid-suction heat exchanger than was the case for the laboratory heat exchanger.

Similarly, calculated evaporator performance was better than measured, resulting in a substantially higher calculation of refrigerant superheat. Frost buildup on the evaporator was not taken into account in the program, and could be part of the reason for the discrepancy in evaporator performance. The difference between total case heat gain and evaporator load is due to the operation of the liquid-suction heat exchanger. Since the heat exchanger is in the air passage, and the return air is still substantially cooler than the liquid refrigerant, heat exchange takes place and the air warms up. This additional heat must then be rejected (back to the refrigerant) at the evaporator. The difference between heat gain and evaporator load is greater in the model calculation than in the measurement, primarily because the program calculates more heat transfer between refrigerant and air in the liquid-suction heat exchanger than was measured.

Other measurements were taken to ensure proper program calculations. Air flows were measured at various points to assure that the calculations were using proper inputs. Checks for spillover air were made; smoke tests revealed that no air

TABLE 3. - Model verification (Refrigerant 502)

Variable	Laboratory measured value	Computer calculated value
Wall surface temperatures (°F): Front, side, rear, bottom	66, 72, 66, 65	68, 71, 68, 62
Refrigerant temperature (°F):		
Heat exchanger outlet, liquid	36.0	32.0
Heat exchanger outlet, vapor	30.0	36.0
Case conduction heat gain (Btu/hr)	720.0	673.0
Total case heat gain (Btu/hr)	3857.0	3743.0
Evaporator load (Btu/hr)	4085.0	4235.0
Refrigerant flow rate (lbm/hr)	74.1	70.7
Refrigerant superheat in evaporator (°F)	14.0	26.0

spillover occurred in the open tub display case. Water removed on defrost was weighed after each defrost cycle. For an open tub display case the moisture removal rate is approximately 3 lb/day and for a multi-deck-air curtain display case the moisture removal rate is approximately 70 to 80 lb/day. Compressor conditions were carefully monitored.

Overall, the program appears to be a fairly accurate model of a display case. Assumptions regarding the liquid-suction heat exchanger and the evaporator need to be refined. The distribution for the radiation heat gain and heat gain due to mixing will also need to be quantified. For purposes of the sensitivity analysis described in the following section, the model has been more than adequate.

4. MODEL RESULTS AND SENSITIVITY ANALYSIS

The tub display case model was run under various conditions, and the results are described in this section. Some parameters, such as air mass flow rate and store temperature were varied over wide ranges to show the sensitivity of case performance to these parameters. While the results described here are particular to the analysis of the tub case, much of the discussion can be extended to display cases in general.

4.1 Heat Gain Distribution

A distribution of heat gains for the tub display case is shown in Table 4. Table 5 shows evaporator load distribution, including effects of air warmed by the liquid suction heat exchanger.

4.1.1 Radiation

Radiation accounts for nearly one-half of the heat gain of a typical tub display case. This number was based on typical store conditions, ceiling temperature 10°F above store temperature, high emissivity food packages (e = 0.9) and a view factor between top layers of food and ceiling (f = 0.86). Changes in these parameters can strongly affect radiation heat gain. Especially high ceilings, or those with many (especially incandescent) light fixtures can significantly increase radiant heat gains, while foil food packages or reductions in view factor can lower radiant heat transfer. For other types of display cases, radiant heat transfer is expected to be a smaller fraction of the total, primarily because of a lower view factor. However, based on this analysis, radiation should be considered a major source of heat gain for all types of display cases.

4.1.2 Mixing and Moisture Entrainment

Second to radiation, air mixing and moisture entrainment also comprise a significant fraction of the tub case heat gain. The value of 30 percent in Table 4 is based on a case filled with food packages to the proper level. Overstocked cases will have increased mixing due to increased turbulence from obstructions in the air stream; empty cases may develop large scale convection currents which may interrupt the air flow. Moisture entrainment, verified by weighing water removed on defrost, was found to be very low. Although no data were taken at relative humidities greater than 55 percent, model predictions show that even at extremely high humidities, heat gain due to moisture entrainment does not significantly increase. It is expected that for display cases with vertical openings mixing and moisture

TABLE 4. - Tub case heat gain distribution

Heat Gain	Btu/hr	Percent of total
Radiation from open top	1729	46.2
Air mixing	1127	30.1
Wall conduction (including surface radiation)	673	18.0
Latent load due to moisture entrainment	174	4.6
Fan motor power	40	1.1
Total	3743	100.0
Refrigerant 502		
Evaporator temperature: -32°F		
Ambient conditions: 75°F, 55 percent R.H.		

TABLE 5. - Tub case evaporator load distribution

Heat Gain	Btu/hr	Percent of total
Radiation from open top	1729	40.8
Air mixing	1127	26.6
Wall conduction (including surface radiation)	673	15.9
Air warming due to liquid/suction heat exchanger	492	11.6
Latent load due to moisture entrainment	174	4.1
Fan motor power	40	1.0
Total	4235	100.0
Refrigerant 502		
Evaporator temperature: -32°F		
Ambient conditions: 75°F, 55 percent R.H.		

entrainment rates could be significantly higher than found in the tub case. However, claims of significant case load reductions due to humidity reduction cannot be substantiated based on this analysis.

4.1.3 Wall Conduction

Heat transfer through the walls represents approximately 18 percent of the total heat gain. The radiation and natural convection losses on the outside surfaces contribute minimally to the overall heat gain. Surface radiation represents 15 percent of the conduction heat gain, while natural convection on the outside walls is only a small fraction of that. The insulation is fairly effective. For example, doubling the insulation would decrease the conduction heat gain by less than 30 percent, and the overall heat gain by only 6 percent. It is reasonable to assume that conduction heat gain occurs in similar proportions in other open cases; in closed door cases additional conduction through the doors and lower overall heat gain makes conduction heat transfer a more significant contributor to heat gain.

4.2 Air Mass Flow Effects

One of the primary design variables in a display case is the air flow rate. All forms of case heat gain except radiation are directly affected by air mass flow. Figure 9 shows that total case heat gain is nearly linear with air flow rate. Heat gain by radiation, however, remains constant, and is shown in Figure 9 as a decreasing percentage of the total heat gain as air flow increases. Figure 10 shows that most of the increase in heat gain with air flow is due to mixing, while heat gain due to conduction and moisture entrainment is not strongly affected as shown in Figure 11.

4.3 Store Temperature Effects

Table 6 shows savings in cooling load of over 12 percent for a 10-deg drop in average store temperature. Most of this savings is due to a reduction in radiant heat gain; changes in other heat gains are not significant.

4.4 Evaporator Size

As part of this analysis, the evaporator was analyzed separately from the display case runs. Table 7 describes the performance of the tub case evaporator as the number of tubes is reduced. The existing evaporator has two sections of eight tubes. According to the model, if only a 10°F change of superheat is required in the evaporator, five tubes are adequate. This table can then be used as a starting point for further evaporator analysis, leading to a possible improvement of the model. However, the model does not include effects such as frost buildup and bad air flow distribution, all of which can cause poor evaporator performance

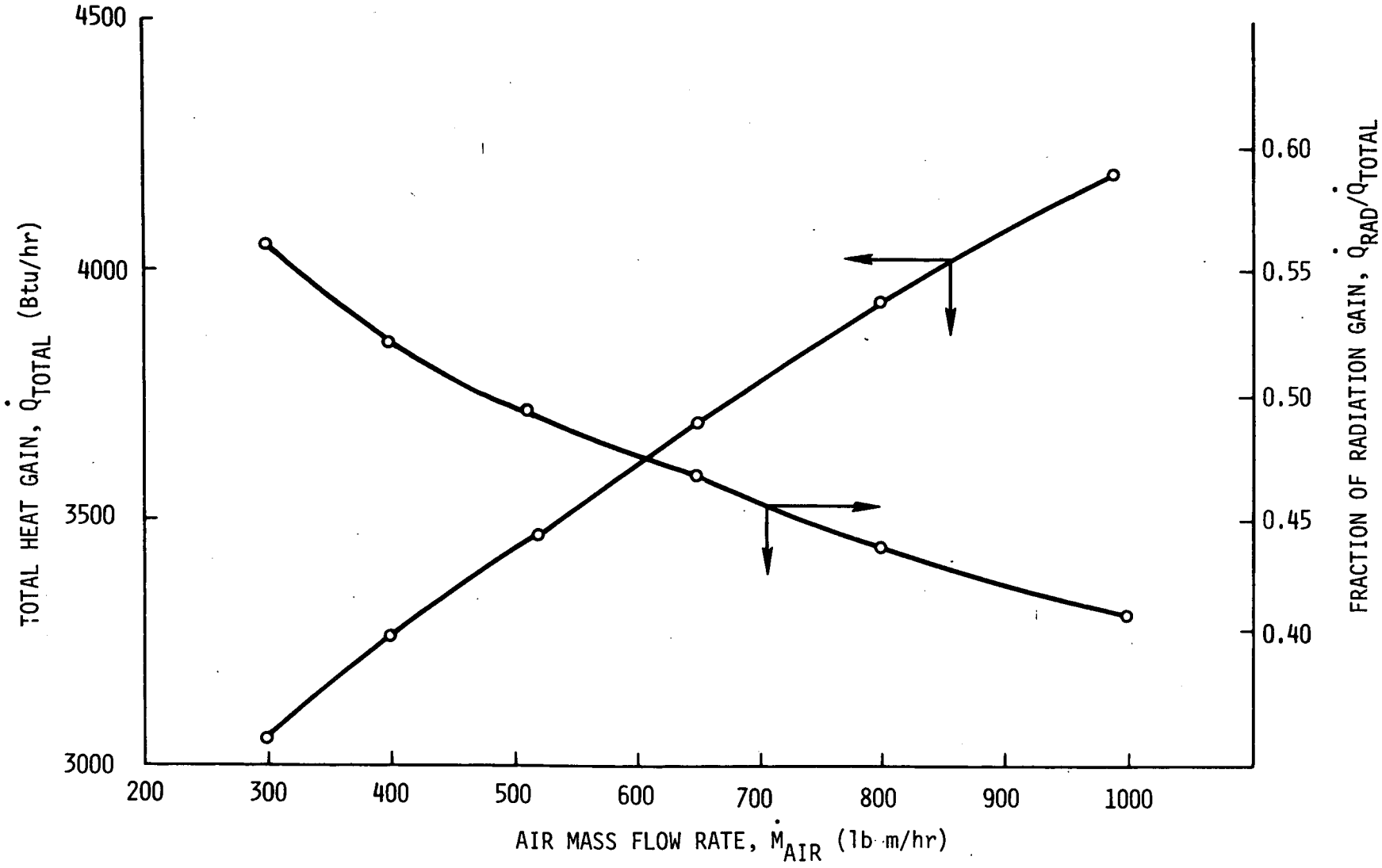

FIGURE 9. - Total tub type display case heat gain and fraction of gain versus air mass flow rate.

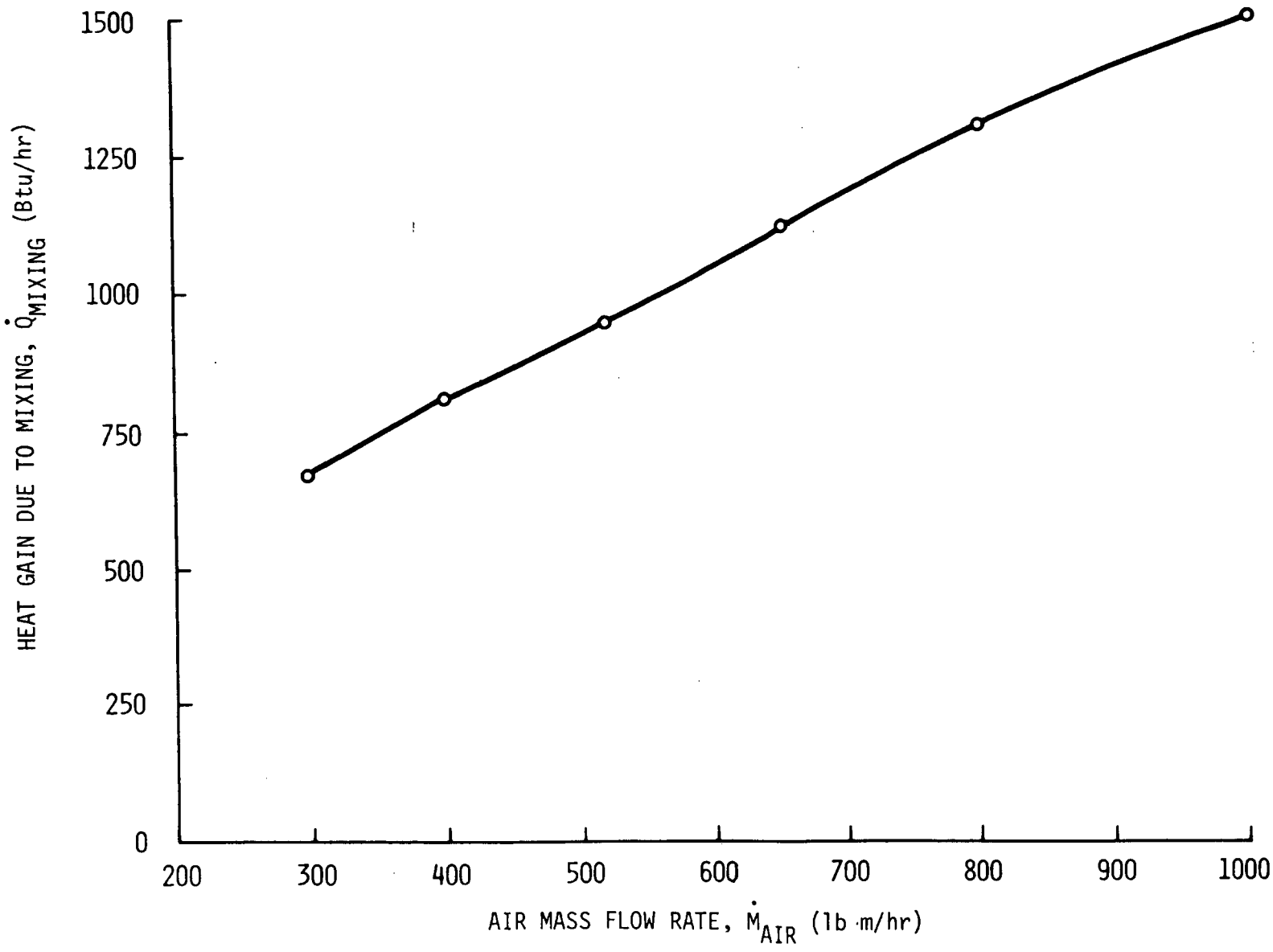

FIGURE 10. - Tub type display case heat gain due to air mixing versus air mass flow rate.

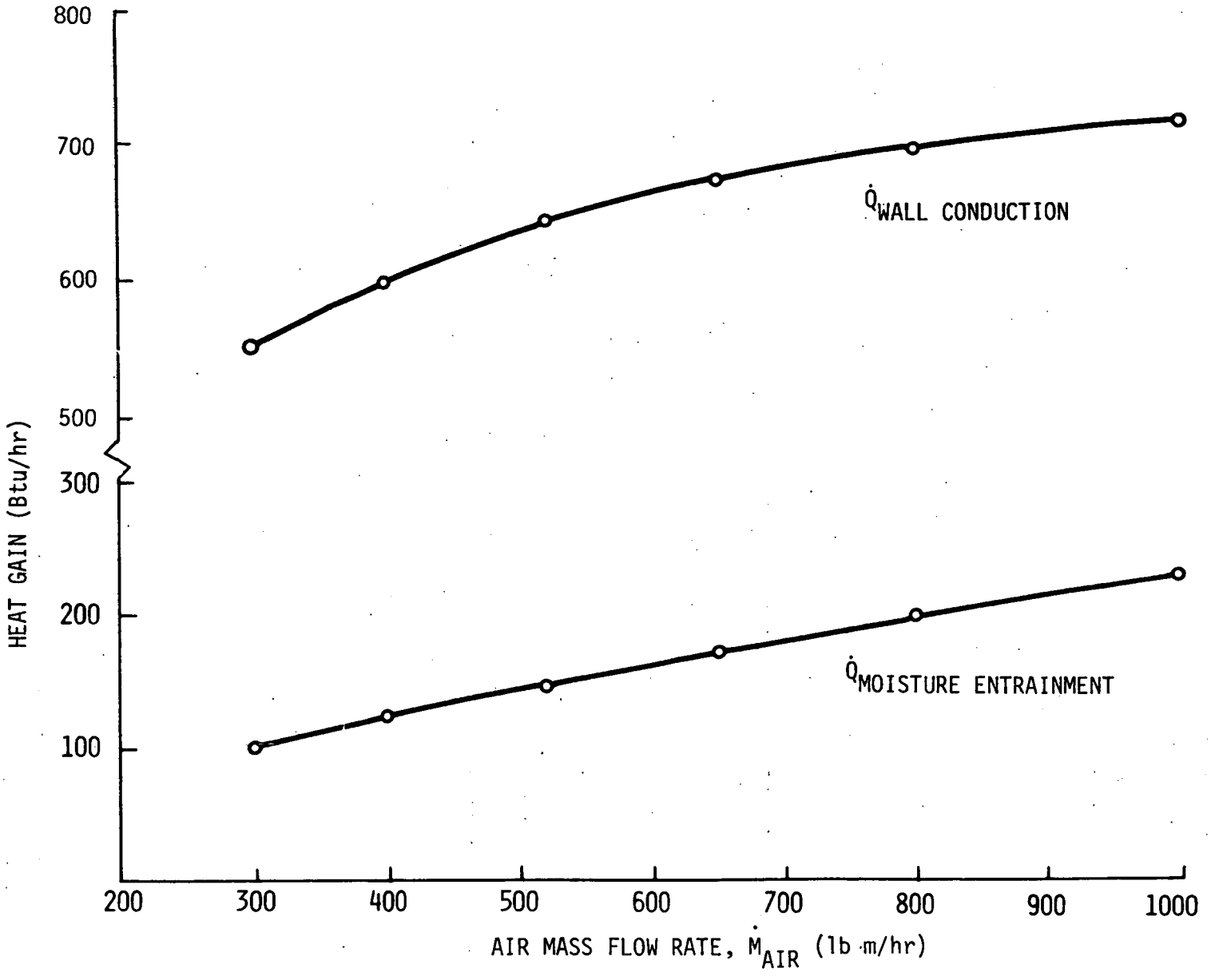

FIGURE 11. - Tub type display case heat gain due to wall conduction and moisture entrainment versus air mass flow rate.

TABLE 6. - Case heat gains as a function of store temperature

T_{store} (°F)	$\dot{Q}_{moist}$ (Btu/hr)	$\dot{Q}_{walls}$ (Btu/hr)	$\dot{Q}_{mixing}$ (Btu/hr)	$\dot{Q}_{rad}$ (Btu/hr)	$\dot{Q}_{total}$ (But/hr)
65	129	451	853	1478	3054
70	139	473	904	1602	3260
75	149	495	954	1729	3470
80	161	516	1005	1859	3684

TABLE 7. - Tub case evaporator performance

Tubes in direction of air flow	Parallel sections	Total heat removal (Btu/hr)	Refrigerant superheat (°F)
8	2	4353	25.9
7	2	4331	23.8
6	2	4290	20.0
5	2	4215	12.8
4	2	4044	0.0
3	2	3519	0.0
2	2	2531	0.0

Evaporator Pressure - 11 psig (-32°F)
Refrigerant Flow - 70.7 lbm/hr

5. POSSIBILITIES FOR FURTHER DISPLAY CASE ANALYSIS AND DESIGN WORK

The work described in this report represents a solid base for the development of a complete supermarket display case model. While the current model is sufficient for a fairly detailed analysis of a tub display case, it lacks the versatility and applicability of a general model. This section describes possible refinements and continuation of work using the current model as a departure point.

5.1 Refinements to the Tub Display Case Model

Improvements to the existing tub display case model should concentrate on further laboratory measurements. Additional data, especially under various ambient conditions and loading conditions will allow a careful evaluation of the evaporator and the open top mixing routines. Working carefully with detailed data, for example, air temperature and velocity profiles, a better understanding of the mixing process can be obtained. Similarly, additional evaporator data over a broader range of conditions can assure accuracy of the evaporator model. Distribution of air flow across the evaporator can be analyzed.

The evaporator model can be expanded to include the effect of frost buildup and a better moisture removal section. The evaporator model can also be modified for optimization of air flow rate and heat exchanger sizing.

Finally, the compressor/condenser characteristics can be added to the model to better quantify energy savings due to decreased cycling or higher evaporator pressure.

Because radiation heat gain is the largest contributor to the total heat gain to tub type display cases, the sensitivity analysis should include the effects of values of food and store ceiling emissivities, view factor, and temperature difference between the display case and store ceiling temperature on radiation heat gain to the display case.

5.2 Extension of Model to Other Display Case Types

Two additional types of display cases should be analyzed in a way similar to the tub case. This has already begun in the course of this project. Using the tub model as a base, models of the open multi-deck and the closed-door reach-in can be developed. The model of the multi-deck will require a detailed

fluid mechanical analysis of the three-layer air curtain commonly used in this type of case. Attempts to approximate this with the single-layer air curtain in this study were not successful. The closed door case will require a careful application of a gravity-flow analysis. Laboratory test data will be needed for both of these cases. Again, the importance of detailed instrumentation and adequate data under various conditions are emphasized. Refinements made to the evaporator model would be valuable here.

The final result would be a multipurpose model that can be used for design, analysis, and comparison of different display case types. The results and recommendations described in this report are of a somewhat general nature and offer significant reductions in heat gain. Once these preliminary measures are implemented, more detailed analyses will be required to make secondary improvements for additional reductions in heat gain.

5.3 New Innovative Display Case Designs

The new work suggested so far has been the analysis of existing display case configurations and development of design improvements for heat gain reduction. It is suggested that conceptual designs of new display case configurations be prepared and analyzed with the improved display case computer model. A cost analysis and marketing analysis should be performed in conjunction with the conceptual design efforts.

6. CONCLUSIONS AND RECOMMENDATIONS

The major conclusions resulting from the work discussed in previous sections are compiled to provide a summary and serve as a basis for the recommendations and new concepts discussed in the following subsections. Most of the recommendations stem directly from analyses performed for the model. In addition, it is believed worthwhile to list several recommendations that may already be in practice, to ensure their continued use and provide a perspective for the newer ideas.

6.1 Conclusions

Results of this work have yielded the following conclusions:

a. Radiation heat gain accounts for nearly half the cooling load

b. Total case heat gain does show significant sensitivity to air flow rate and store temperature. For example, the total case heat gain increases 25 percent for a 100 percent increase in air flow and increases 12 percent for a 10°F increase in store temperature.

c. Mixing and moisture entrainment heat gains are approximately linear with flow rate

d. Conduction heat gain through walls is sensitive to air flow rate. The conduction heat gain increases 20 percent for a 100 percent increase in air flow

e. Surface radiation represents 15 percent of wall conduction heat gain

f. Only 30 percent of the heat rejected by the liquid in the liquid suction heat exchanger goes to the vapor, the remainder goes to the air

g. Increase in evaporator load due to air warming over the liquid suction heat exchanger is compensated by the increased refrigeration effect due to additional subcooling

h. Under ideal operating conditions, the evaporator is well oversized.

6.2 Immediate Recommendations

The ideas presented in this subsection are ones that do not require significant design changes. They may require some analysis, testing, and minor modifications prior to full implementation. It is expected that individual savings as high as 5 percent could be achieved with some of these recommendations.

Improve Air Flow Distribution

Since the fans in a display case are located on 2-1/2 to 3 ft centers, air flow distribution at the evaporator is a significant concern. For maximum evaporator efficiency, air flow should be evenly distributed for the whole length of the evaporator. Diffusers could be employed at the fan outlets to spread the air flow more uniformly; or the fans could be disregarded further from the evaporator. Local obstructions to the flow should be compensated for. A further problem in air distribution is the flow around the 90 deg bend as the air enters the rear duct to pass through the evaporator. Measurements confirmed the typical flow pattern observed in a bend. The flow along the outer edge was as high as four times the flow along the inside of the bend. With vanes, this flow distribution could be improved to supply equal and sufficient air flow to each of the two circuits in the evaporator. Initial tests with vanes should be performed to demonstrate the efficiency improvement, and to determine whether that vane frosting is a problem.

Employ Liquid Suction Heat Exchangers

These heat exchangers can be used in their current design in both medium and low temperature cases. They both ensure subcooling and increase refrigeration effect. The interaction with the air flow is not considered a problem. The application of these heat exchangers should take into consideration the constraint of return vapor temperature to the compressors; that is, for R-502, this temperature should not be less than -40°F (6).

Employ More Efficient Fan Motors

Many existing fan motors are extremely inefficient. Motors of newer design, such as permanent split capacitor motors, may be four times as efficient as existing motors. Their use would both lower direct power consumption by fans, and reduce evaporator load due to motor heat rejection. However, because fan motors account for approximately one percent of the evaporator load, a tradeoff between initial capital cost and energy savings must be first performed.

Replace Electric Defrost Where Possible

Hot gas defrost and air defrost are far more efficient than electric defrost, and should be the preferred defrost systems in all case designs, with electric defrost only an option.

Utilize New Evaporator Controls

Pressure drop in the suction line can be costly in terms of compressor power. Low pressure drop evaporator pressure regulators, especially electronic sensing regulators should be considered as standard equipment.

Install Demand Defrost

Defrosting should be done on demand and not on timed interval, because frost buildup can be erratic, depending strongly on local ambient conditions. Two methods for determining frost buildup are optical measurements and pressure differential measurements. Optical frost sensors are readily available; however, they are expensive. A sensor measuring the air pressure differential across the evaporator coil could also be considered. A switch could be set to activate defrost once frost buildup achieves a certain reduction in air flow. A single case system could be wired simply, including pressure switches, time delay relays, and wiring. Again, laboratory testing would be required to demonstrate this concept.

6.3 New Design Concepts

These newer ideas may represent substantial investment in design procedure. However, their preliminary evaluation may provide valuable insight into other improvements that can be made to display cases.

Radiation Shield for Tub Cases

As shown in Figure 12, this radiation shield could reduce the total heat gain on a typical tub case by as much as 25 percent. In addition, with proper design, the shield should add merchandizing advantages the tub case does not presently have. For example, a properly angled back wall could reflect the product in the tub at the shopper's eye level; the top of the shield could be used as additional shelving. Low emissivity paint or other coating would have to be investigated. With a simple design, such a shield could be used as a retrofit for tub cases made by any manufacturer. Another concept may be a radiation shield suspended from the ceiling.

Radiation Shield for Multi-Deck Cases

Figure 13 shows the radiation reduction concept applied to multi-deck cases. Depending upon the size of the shield and how much ceiling is blocked, 10 to 15 percent savings could be reasonably expected. Further savings would be obtained at night when the shield could fold down and protect the product from both convective and radiative heat gain. Even if not folded down at night, the shield could still be blocking part of the ceiling, thus benefiting energy efficiency.

Double Door Reach-In Merchandizer

It is estimated that heat gain could be cut 5 to 10 percent by halving the open area for any door as shown in Figure 14.

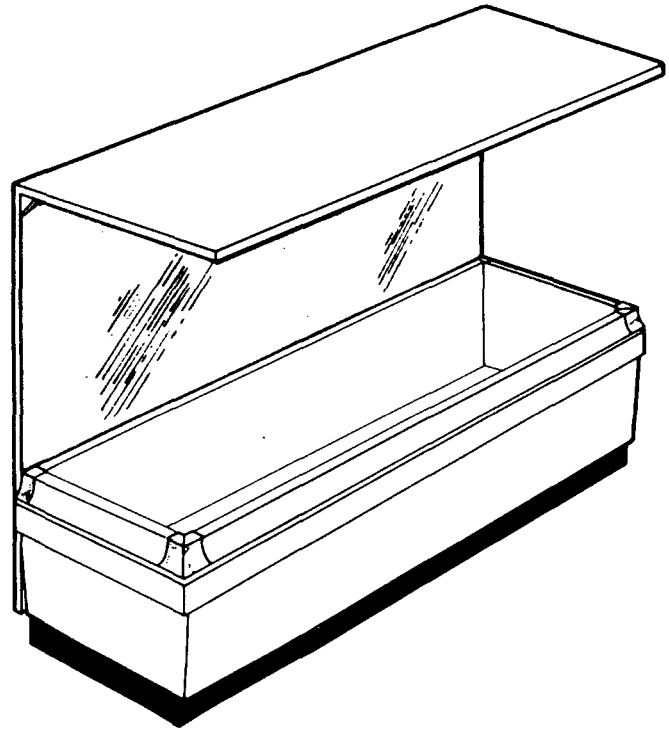

FIGURE 12. - Tub case with radiation shield.

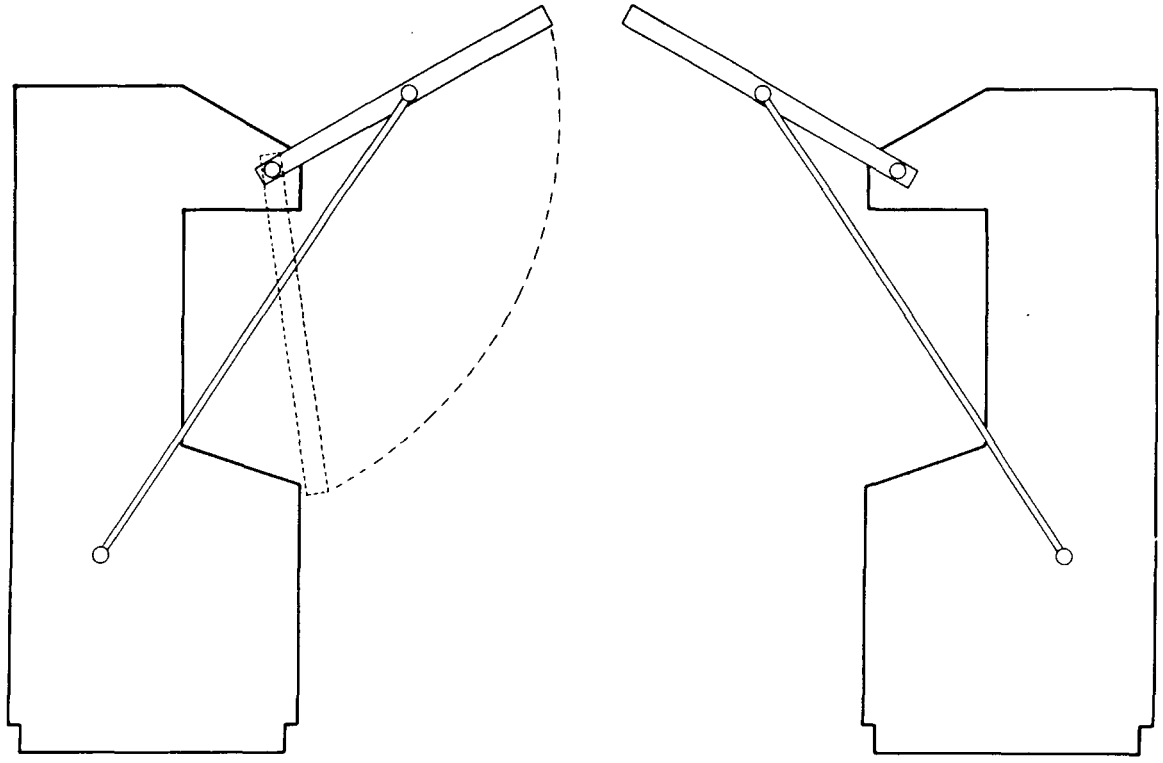

FIGURE 13. - Radiation shields for multi-deck cases.

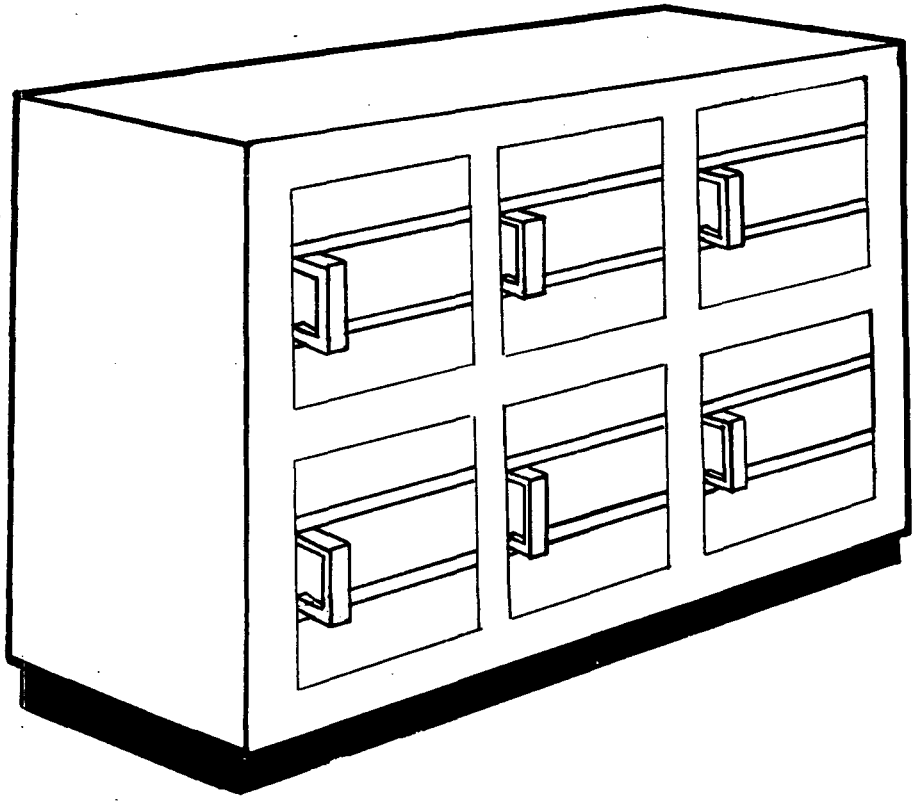

FIGURE 14. - Double-door reach-in merchandizer.

Not only is the opening smaller, but the density difference driving force between cool air escaping out the lower part and warm air entering in the upper part is reduced. If an air curtain were ever considered to reduce heat gain during door opening, a smaller door would offer a substantial savings in air velocity and volume.

Low Air Flow Tub Case

The design shown in Figure 15 has as its goal the reduction of air flow. If the air flow could be induced to flow directly over the food packages, and not around the case shell, the evaporator could run at a higher temperature. Furthermore, the low air flow would reduce heat gains due to both air mixing and conduction through the case shell. Racks would have only slight perforations to assure that empty racks do not short-circuit the air flow. Racks of different sizes can be available, to correspond to inventory. A small rack allows high product visibility with low inventory requirements.

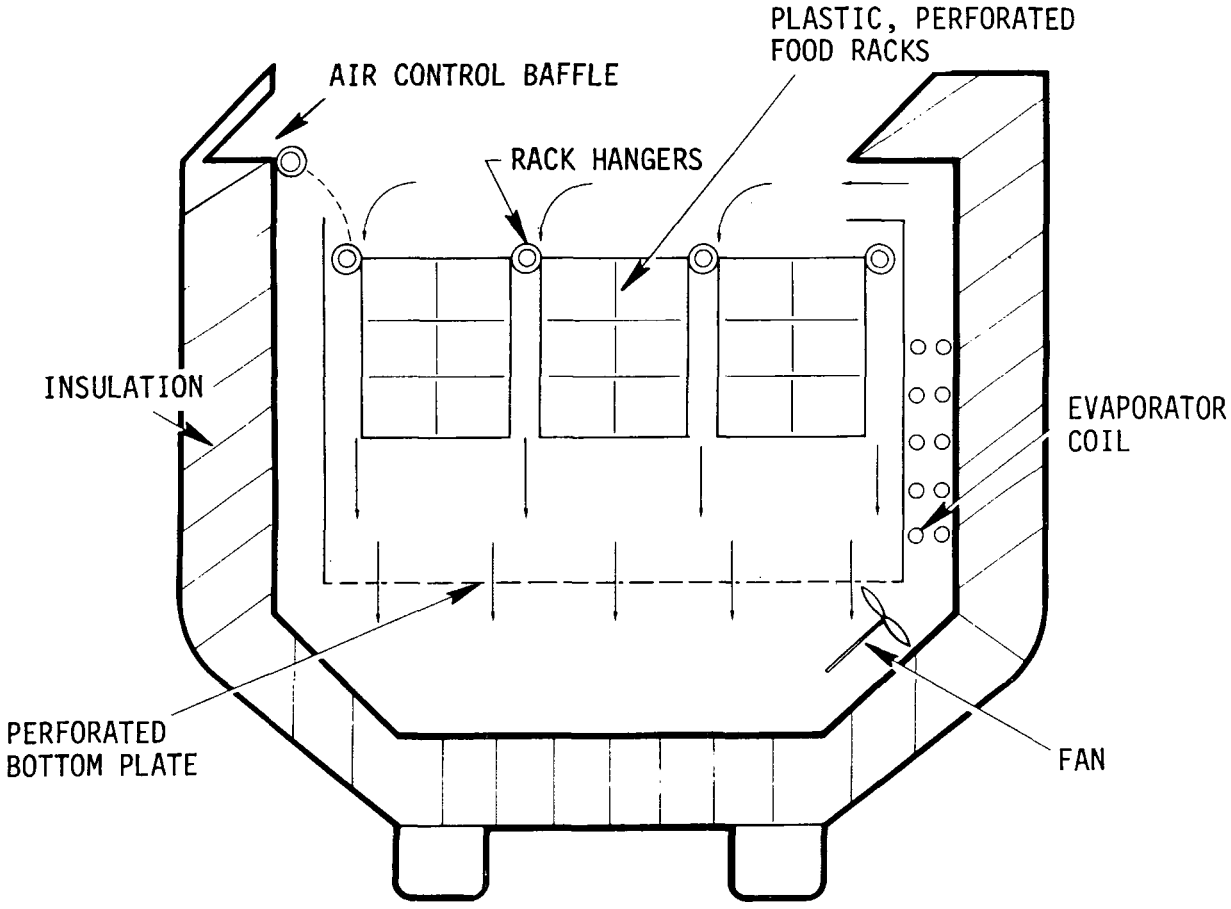

FIGURE 15. - Low air flow tub case design.

7. REFERENCES

1. Food Marketing Institute, "Facts About New Supermarkets Opened in 1978," Washington, DC, 1979.

2. Ellison, D. and F.A. Creswick, "Computer Simulation of the Steady-State Performance of Air-to-Air Heat Pumps," Oak Ridge National Laboratory, ORNL-CON-16, March, 1978.

3. Lock, A.C., "The Velocity Distribution in the Laminar Boundary Layer Between Parallel Streams," Quarterly Journal of Mechanics and Applied Mathematics, IV, 1, 1951.

4. Hayes, F.C. and W.F. Stoecker, "Design Data for Air Curtains," ASHRAE paper No. 2121.

5. Asker, G. and E. Berner, "Air Entrance Units for Freezer and Cooler Room Doorways (2)," Air Conditioning, Heating and Refrigeration News, August 23, 1965.

6. Grimm, F., "Basic Compressor Application," ASHRAE Trans., Vol. 87, Part 1, 1981.

APPENDIX A

DISPLAY CASE COMPUTER PROGRAM SAMPLE RUN

This appendix presents a listing (Figure A-1) of a sample run. A description of the run output is given in Table A-1. Table A-2 lists and defines all the input variables to the program. This table is taken directly from the listing of the data input subroutine DATAON.

The printout provided in Figure A-1 shows the results of a sample run. The first portion of the printout is input data. Display case wall and control volume data is printed first, then all operating conditions and miscellaneous inputs, and finally the evaporator input conditions. By careful examination of the input, it can be seen that this run represents a low temperature display case using R-502, operating at 26 psia suction pressure and 105°F condensing temperature in a 75°F store at 60 percent relative humidity.

Using the evaporator input conditions, the program calculates various detailed heat exchanger parameters for the evaporator. It can also be noted that refrigerant enthalpies and temperatures and air temperatures according to Figure 5 are printed out at various calculation intervals. This sample run is on a detailed printout schedule (LPRINT=2) so that every possible parameter is printed out.

After the first printout of refrigerant and air conditions, various arrays used in the integration routines in ORNTOR are printed out. Finally, various heat fluxes shown in Figure 5 and calculated in ORNTOR are printed out: QMOIST, QAIR, QRAD, QDPNT. The results of every call to COMWAL are also listed. These include the control volume in question, forced or natural convection heat transfer coefficients, radiation heat transfer coefficients, overall heat transfer coefficients, heat fluxes and temperatures.

After the calls to COMWAL where the program has calculated conduction heat gains, the refrigerant and air conditions are again printed out. Various heat transfer resistances concerning the liquid suction heat exchanger are calculated and printed out, as are overall liquid-to-air and liquid-to-vapor heat fluxes, log mean temperature differences and heat transfer resistances (QLA, QLV, DTLA, DTLV, RLA, RLV).

The refrigerant and air conditions are again updates; refrigerant mass flow (RMNEF) is calculated based on the total heat gain of the case. New liquid suction resistances are computed and the program launched into the convergence of the matrix inversion routine which accounts for the next page of printout. Upon convergence, new refrigerant and air conditions are printed out.

```
      J      NL  WHD-1  WHD-2   WL-1   WL-2   WT-1   WT-2   WK-1   WK-2   EM1     EM2     AA    TRAD     DW
      1       1  1.380  2.200  2.580  2.950  0.170  0.170  0.022  0.022   0.90    0.90 9999.0   70.0   0.00
      2       4  1.380  1.800 12.000 12.000  0.021  0.170  0.013  0.022   0.90    0.90 9999.0   70.0   0.12
      2       4  1.380  1.800 12.000 12.000  0.003  0.003 26.000 26.000   0.90    0.90 9999.0   70.0   0.12
      2       4  1.380  1.800 12.000 12.000  0.000  0.100  0.001  0.013   0.90    0.90 9999.0   70.0   0.12
      2       4  1.380  1.800 12.000 12.000  0.000  0.003  0.001 26.000   0.90    0.90 9999.0   70.0   0.12
      3       1  2.580  2.950 12.000 12.000  0.047  0.170  0.022  0.022   0.90    0.90   48.0   55.0   0.21
      4       1  1.380  1.800 12.000 12.000  0.021  0.170  0.013  0.022   0.90    0.90 9999.0   70.0   0.16
DL,DV,TH.,THV,RKML,RKMV      0.031      0.073    0.00230    0.00375      224.0      224.0
XO,YO,Y1,DDA,ZT,THTA,LSHX       2.58       0.00       0.32       1.41       9.42       1.00       1
TS,RHC,RHS,RNU1,RNU2,CPA1,CPA,C1,C2      75.0       0.9       0.6     0.410     0.600     0.239     0.240     0.000     0.012
TPROD,AMASS,CKA,FSH,AF,EMFD,TOL        0.0     650.0     0.013      0.86     30.00      0.90    0.0100
NF,T3,P5,TSUP,TSUB,RMREF,QMISC,WFAN    502    105.00     26.00     10.00     23.00    120.00    103.00     40.00
QAIRMUL,RLAMUL,RLVMUL,WETMUL     1.00      1.00      1.00      0.37
  ENTER LPRINT
2


   EVAPORATOR INPUT ECHO:

        DEA    =  0.05200        DER    =  0.04600        DELTA = 0.670E-03        FP     =  30.00          XKF    = 120.00
        AAF    =   3.030         NT     =   8             NSECT =   2
        HCONT  = 20000.00        ST     =  0.1400         WT    =  0.1500
        QA     =      0.0        TAII   =    0.00            INDIC =   0
        TWBII  =    0.00             RHI    =  0.000


   CALCULATED EXCHANGER CHARACTERISTICS:

        SIGA   =  0.616          P      =  0.14444        PTBO  =  0.16328
        ARFT   =0.1661E-02       ARHT   =  12.504         ALFAR =   6.878          ALFAA =  61.554
        XLF    =  0.0677         FAR    =  0.8762         CAR   =345.1147

     H1        H3        H4        H5        H6        H7        T1        T3        T4        T5        T6        T7
   0.00     32.07     17.62      0.00     74.71     76.25      0.00     82.00     33.91      0.00    -26.35    -16.35
 1TA1 THRU TA6   -21.35   -21.35   -21.35   -21.35   -21.35   -21.35
150            1  1.7600000E-02   1787.557      0.0000000E+00 -3.1999998E-02
150            2  1.6163444E-02   1731.727      2.8731111E-02 -3.2688864E-03
TXY   481.7697       461.3483       446.3686       440.0431       438.5540
 438.3572       438.3451       438.3451       438.3451       438.3451
 438.3451       438.3451       438.3451       438.3451       438.3451
 438.3451       438.3451       438.3451       438.3451       438.3451
 438.3451
```

FIGURE A-1. - Listing of a sample run.

```
CXY  4.6548857E-03  2.5682333E-03  1.0376023E-03  3.9126910E-04  2.3910590E-04
2.1900050E-04  2.1776650E-04  2.1776650E-04  2.1776650E-04  2.1776650E-04
2.1776650E-04  2.1776650E-04  2.1776650E-04  2.1776650E-04  2.1776650E-04
2.1776650E-04  2.1776650E-04  2.1776650E-04  2.1776650E-04  2.1776650E-04
2.1776650E-04
250 -3.2688864E-03  7.4761584E-03  0.3143926        1127.311
SIMF1  2.8109837E-02  2.2443971E-02  1.1285912E-02  4.6261167E-03
2.8812622E-03  2.6455771E-03  2.6310720E-03  2.6310720E-03  2.6310720E-03
2.6310720E-03  2.6310720E-03  2.6310720E-03  2.6310720E-03  2.6310720E-03
2.6310720E-03  2.6310720E-03  2.6310720E-03  2.6310720E-03  2.6310720E-03
2.6310720E-03  2.6310720E-03
300  1.5540768E-03  9.0062721E-03  0.3854930       0.7115515       0.1239740
MOIST   29.12422       1.0165606E-02   18.00000       -4.870679
2.4202485E-04  -5.125173
HWST,HWVAP,HWICE,QMOIST,QAIR,QRAD,QOPNT  1094.30  1051.52  -167.48   156.43  1127.31  1729.24  3012.98
COMWAL RESULTS:   ICV,HC1,HC2,HR,U,Q,T1,T2,TT1,TT2   2     0.41     0.78     0.00     0.19    66.00  -9.8 -16.2   0.0 -21.4

_TTB1:,OPERATOR      08:44:48.40
' SHUTDOWN IN 15 MINS. '

COMWAL RESULTS:   ICV,HC1,HC2,HR,U,Q,T1,T2,TT1,TT2   3     0.10     0.46     0.00     0.07    45.01 -14.9 -18.0   0.0 -21.1
COMWAL RESULTS:   ICV,HC1,HC2,HR,U,Q,T1,T2,TT1,TT2   4     0.41     0.53     0.00     0.17    58.36  -8.7 -14.4   0.0 -21.0
COMWAL RESULTS:   ICV,HC1,HC2,HR,U,Q,T1,T2,TT1,TT2   1     1.08     0.50     0.58     0.09    45.61  68.2  14.1  75.0   0.0
COMWAL RESULTS:   ICV,HC1,HC2,HR,U,Q,T1,T2,TT1,TT2   2     0.21     0.78     0.58     0.13     3.12  -0.9  -1.2   0.0  -1.5
COMWAL RESULTS:   ICV,HC1,HC2,HR,U,Q,T1,T2,TT1,TT2   2     1.18     0.85     0.66     0.06    94.68  70.9   3.7  75.0  -1.5
COMWAL RESULTS:   ICV,HC1,HC2,HR,U,Q,T1,T2,TT1,TT2   3     0.52     0.48     0.39     0.09   229.19  61.6  12.4  75.0  -0.9
COMWAL RESULTS:   ICV,HC1,HC2,HR,U,Q,T1,T2,TT1,TT2   4     1.12     0.58     0.60     0.10   154.78  68.3  13.2  75.0   0.9

      H1        H3        H4        H5        H6        H7        T1        T3        T4        T5        T6        T7
    0.00     32.07     17.62      0.00     74.71     76.25      0.00     82.00     33.91      0.00    -26.35    -16.35
 2TA1 THRU TA6   -20.26    -1.67    -1.04   -21.35     0.73   -20.26
R1 ETC  2.2553820E-02  8.1768658E-06  0.1855225      2.6526067E-02
7.8553385E-05  6.2556744E-02  0.1904857
QLA,DTLA,RLA   501.9023       53.32511       0.1062460
QLV,DTLV,RLV   211.0976       18.82175       8.9161366E-02

      H1        H3        H4        H5        H6        H7        T1        T3        T4        T5        T6        T7
   90.70     32.07     20.71      0.00     74.71     76.25     77.61     82.00     33.91      0.00    -26.35    -16.35
 3TA1 THRU TA6   -20.26    -1.67    -1.04     2.19     0.73   -20.26
RMREF (LB/HR)   62.77613
R1 ETC  2.2553820E-02  8.1768658E-06  0.1855225      2.6526067E-02
7.8553385E-05  6.2556744E-02  0.1904857
    AJAK(I,J)                                  FF(I,J)
```

FIGURE A-1. - Listing of a sample run. (Continued)

```
              6.66      0.00   -162.01                0.00      0.00      0.00
              2.88    -24.77      0.00             -695.92      0.00      0.00
            -28.40     15.11      6.66              194.02      0.00      0.00
INV AJAK(I,J)                                FN(I,J)
              0.00     -0.02     -0.04                8.75      0.00      0.00
              0.00     -0.04      0.00               29.12      0.00      0.00
             -0.01      0.00      0.00                0.36      0.00      0.00
CONV1,CONV2,CONV3  0.3475317      0.0000000E+00  0.0000000E+00
CONV1,CONV2,CONV3  0.3475317      0.6004255      0.0000000E+00
CONV1,CONV2,CONV3  0.3475317      0.6004255      0.1960876
RMREF (LB/HR)   67.96664
R1 ETC  2.1165047E-02  8.1768658E-06  0.1855225      2.5128420E-02
7.8553385E-05  5.9033964E-02  0.1904857
    AJAK(I,J)                                FF(I,J)
              7.58      0.00   -162.93               -0.43      0.00      0.00
              5.53    -16.83      0.00             -234.09      0.00      0.00
            -33.54      6.38      7.58              271.40      0.00      0.00
INV AJAK(I,J)                                FN(I,J)
              0.00     -0.01     -0.03               -5.87      0.00      0.00
              0.00     -0.06     -0.01               11.97      0.00      0.00
             -0.01      0.00      0.00               -0.27      0.00      0.00
CONV1,CONV2,CONV3  0.1892465      0.6004255      0.1960876
CONV1,CONV2,CONV3  0.1892465      0.3279095      0.1960876
CONV1,CONV2,CONV3  0.1892465      0.3279095      0.1286021
RMREF (LB/HR)   70.35921
R1 ETC  2.0587280E-02  8.1768658E-06  0.1855225      2.4546629E-02
7.8553385E-05  5.7568196E-02  0.1904857
    AJAK(I,J)                                FF(I,J)
              6.97      0.00   -162.32               -0.52      0.00      0.00
              6.00    -16.98      0.00               -7.10      0.00      0.00
            -34.11      6.16      6.97               24.81      0.00      0.00
INV AJAK(I,J)                                FN(I,J)
              0.00     -0.01     -0.03               -0.70      0.00      0.00
              0.00     -0.06     -0.01                0.17      0.00      0.00
             -0.01      0.00      0.00               -0.03      0.00      0.00
CONV1,CONV2,CONV3  2.2118563E-02  0.3279095      0.1286021
CONV1,CONV2,CONV3  2.2118563E-02  4.6809129E-03  0.1286021
CONV1,CONV2,CONV3  2.2118563E-02  4.6809129E-03  1.2636949E-02
RMREF (LB/HR)   70.39442
R1 ETC  2.0579040E-02  8.1768658E-06  0.1855225      2.4538329E-02
7.8553385E-05  5.7547268E-02  0.1904857
    AJAK(I,J)                                FF(I,J)
```

FIGURE A-1. - Listing of a sample run. (Continued)

```
              6.91       0.00   -162.26                0.00       0.00       0.00
              5.98     -17.02      0.00               -0.09       0.00       0.00
            -34.04       6.19      6.91                0.34       0.00       0.00
INV AJAK(I,J)                                   FN(I,J)
              0.00      -0.01     -0.03               -0.01       0.00       0.00
              0.00      -0.06     -0.01                0.00       0.00       0.00
             -0.01       0.00      0.00                0.00       0.00       0.00
CONV1,CONV2,CONV3  3.0454286E-04  4.6809129E-03  1.2636949E-02
CONV1,CONV2,CONV3  3.0454286E-04  5.0630711E-05  1.2636949E-02
CONV1,CONV2,CONV3  3.0454286E-04  5.0630711E-05  1.8762080E-04

     H1        H3        H4        H5        H6        H7        T1        T3        T4        T5        T6        T7
   84.35     32.07     16.97     16.97     74.71     76.25     36.35     82.00     31.75      0.00    -26.35    -16.35
 4TA1 THRU TA6   -20.26    -1.67    -1.04     2.13      0.73    -20.26


        TAI    =    4.155
        TWBI   =     0.00
        RHI    =    0.900
        QA     =    131.70
        TSA    =   -26.35
        H4     =    16.97


   BEGINNING OF CALCULATION IN SUBROUTINE EVAP:

        TADHI =    23.02          TADTP =   -25.07
   MOISTURE REMOVAL OCCURS


   START OF ITERATION ON WALL TEMP.
   END OF ITERATION.  RESULT IS
        TWALLI=   -16.76

   START OF ITERATION ON FIRST MOISTURE REMOVAL SECTION
*********FIRST MOISTURE REMOVAL REGION ITERATION DOES NOT CONVERGE************
   END OF ITERATION.  RESULTS ARE
        HAIR2 =    -4.53          TWALL2=   -24.32
```

FIGURE A-1. - Listing of a sample run. (Continued)

```
    START OF ITERATION ON SECOND MOISTURE REMOVAL SECTION
********SECOND MOISTURE REMOVAL REGION ITERATION DOES NOT CONVERGE********
    END OF ITERATION.  RESULTS ARE
         HAIR3 =  -5.799          TWALL3=  -25.93

    START OF ITERATION ON EXIT WET BULB TEMP
    END OF ITERATION.  RESULT IS
         TWB3  =  -25.02

    END OF ITERATION.  RESULTS ARE
         XMH2O =    0.066         TDB3  =  -25.02


    RESULTS FROM SUBROUTINE EVAP (ONE CIRCUIT) :


    NTU TWO PHASE =  3.1670      EFF TWO PHASE =  0.9579
    NTU SUPER =  2.8698      EFF SUPER =  0.8604
    REF TO AIR C RATIO (SUPER) =  0.3790
    TOTAL HEAT EXCH EFFECTIVENESS =  0.9510

         QTP   =  2032.25         QSP   =   137.54

         FTP   = 0.829            F     = 0.171
         XMATP =  280.21          XMASP =   57.60
                                  EXFR  = 0.860
         TDB3  =  -25.02         TAOSP =   -5.79



         TAI   =    4.15     TAO   =  -21.74
         TWBI  =    2.15
         TSA   =  -26.35
         TRO   =   -0.11
         SUPER =   26.25



    ITERATION # 1 ON EVAP EXIT STATE     *** NEW TSA =  -26.11
    PD=  -0.293    HTP=  101.55
```

FIGURE A-1. - Listing of a sample run. (Continued)

```
BEGINNING OF CALCULATION IN SUBROUTINE EVAP:

     TADHI =   22.44          TAOTP =  -24.83
MOISTURE REMOVAL OCCURS


START OF ITERATION ON WALL TEMP.
END OF ITERATION.  RESULT IS
     TWALLI=  -16.59

START OF ITERATION ON FIRST MOISTURE REMOVAL SECTION
**********FIRST MOISTURE REMOVAL REGION ITERATION DOES NOT CONVERGE************
END OF ITERATION.  RESULTS ARE
     HAIR2 =   -4.48          TWALL2=  -24.09

START OF ITERATION ON SECOND MOISTURE REMOVAL SECTION
********SECOND MOISTURE REMOVAL REGION ITERATION DOES NOT CONVERGE********
END OF ITERATION.  RESULTS ARE
     HAIR3 =  -5.740          TWALL3=  -25.69

START OF ITERATION ON EXIT WET BULB TEMP
END OF ITERATION.  RESULT IS
     TWB3  =  -24.78

END OF ITERATION.  RESULTS ARE
     XMH2O =    0.065         TDB3  =  -24.78


RESULTS FROM SUBROUTINE EVAP (ONE CIRCUIT) :


NTU TWO PHASE =  3.1660     EFF TWO PHASE =  0.9578
NTU SUPER =  2.7556     EFF SUPER =  0.8483
REF TO AIR C RATIO (SUPER) =  0.3949
TOTAL HEAT EXCH EFFECTIVENESS =  0.9502

     QTP   =  2032.25         QSP   =   135.60

     FTP   = 0.836            F     = 0.164
     XMATP =  282.53          XMASP =   55.28
                              EXFR  = 0.848
     TDB3  =  -24.78         TAOSP =   -6.07
```

FIGURE A-1. - Listing of a sample run. (Continued)

```
TAI   =    4.15    TAO   =  -21.72
TWBI   =    2.15
TSA   =  -26.11
TRO   =   -0.47
SUPER =   25.88


OVERALL EVAPORATOR PERFORMANCE FOR THIS AIR INLET TEMP:

XMA   =    675.6        XMR   =   70.39
GA    =    362.0        GR    =   21189.6
HA    =    3.32         HRV   =    9.72         HTP   =  101.38
QE    =    4335.7       QLAT  =     138.0
PDAIR     =    0.0001
PD        =     -0.29

  H1        H3        H4        H5        H6        H7        T1        T3        T4        T5        T6        T7
 84.35     32.07     16.97     16.97     74.71     78.66     36.35     82.00     31.75      0.00    -26.11     -0.47
STA1 THRU TA6   -20.26     -1.67     -1.04      2.13      4.15    -21.72
QREQ,CHK  -3680.238      0.1635429
```

FIGURE A-1. - Listing of a sample run. (Continued)

TABLE A-1. - List and definition of output variables

H1 through H6	-	refrigerant enthalpies corresponding to temperatures in Figure 5
T1 through T6	-	refrigerant temperatures (see Figure 5)
TA1 through TA6	-	air temperatures (see Figure 5)
TXY	-	temperature array, above open top display case
CXY	-	moisture concentration array, above open top display case
SIMP	-	Simpson's rule coefficients, integration routine in tub
MOIST	-	HAIR1 enthalpy of moist air at store conditions (Btu/lb dry air)
		WAIR1 actual humidity of air at store conditions (lb water/ lb dry air)
		HAIR2 enthalpy of moist air at store T, 0 percent rel. humidity
		WAIR2 actual humidity of air at store T, 0 percent rel. humidity
		HAIR3 enthalpy of moist air at case T, 100 percent rel. humidity
		WAIR3 actual humidity of air at case T, 100 percent rel. humidity
		HAIR4 enthalpy of moist air at case T, 0 percent rel. humidity
HWST	-	ha,1 ha,2/wa,1 enthalpy of water vapor at store conditions
HWVAP	-	ha,3 ha,4/wa,4 enthalpy of water vapor at display case conditions
HWICE	-	hw, vap 1075 144 enthalpy of ice in display case
QMOIST	-	display case heat gain due to moisture entrainment
QAIR	-	heat gain due to mixing
QRAD	-	heat gain due to radiation
QOPNT	-	total heat gain in open top display case
ICV	-	control volume number (see Figure 5)
HC1	-	convection heat transfer coefficient, inside wall
HC2	-	convection heat transfer coefficient, outside wall
HR	-	radiant heat transfer coefficient, outside wall
U	-	overall heat transfer coefficient of wall
Q	-	heat transfer across wall
T1	-	wall temperature outside wall
T2	-	wall temperature inside wall
$\pi 1$	-	ambient air temperature inside wall
$\pi 2$	-	ambient air temperature outside wall
R1 ETC	-	thermal resistances for various components of the liquid-suction heat exchanger
QLA	-	heat flux between liquid and air, 1-s heat exchanger
DTLA	-	temperature difference between liquid and air
RLA	-	thermal resistance between liquid and air
QLV	-	heat flux between liquid and vapor, 1-s heat exchanger
DTLV	-	temperature difference between liquid and vapor
RLV	-	thermal resistance between liquid and vapor
RMNER	-	refrigerant mass flow rate
FF	-	array of coefficients for matrix for simultaneous solution of heat transfer equations for liquid-suction heat exchanger
AJAK	-	function of matrix FF
INV AJAK	-	inverse matrix of function AJAK
CONV1 through CONV3	-	convergence criteria for iterative solution of heat transfer equations

TABLE A-1. - List and definition of output variables (continued)

FN	-	solution matrix for simultaneous solution of heat transfer equations
TA1	-	evaporator air inlet temperature (^{o}F)
TWBI	-	evaporator inlet wet bulb temperature (^{o}F)
RHI	-	evaporator inlet relative humidity
QA	-	air flow through evaporator (lb/hr)
TSA	-	refrigerant saturation temperature at evaporator pressure
H4	-	refrigerant enthalpy entering evaporator
TADHI	-	air inlet dew point temperature
TAOTP	-	air temperature at outlet of refrigerant-side two-phase heat transfer section
TWALL1	-	evaporator tube wall temperature
HAIR2	-	air enthalpy at outlet of first moisture removal section
TWALL2	-	tube wall temperature at outlet of first moisture removal section
HAIR3	-	air enthalpy at outlet of second moisture removal section
TWALL3	-	tube wall temperature at outlet of second moisture removal section
TWB3	-	evaporator outlet air wet bulb temperature
XMH20	-	mass fraction of water removed (lb/hr)
TDB3	-	evaporator outlet dry bulb temperature
QTP	-	heat transfer in two-phase section of evaporator
QSP	-	heat transfer in single-phase section of evaporator
FTP	-	fraction of evaporator in two-phase heat transfer
F	-	fraction of evaporator in single-phase heat transfer
XMATP	-	portion of air flow for two-phase heat transfer
XMASP	-	portion of air flow for single-phase heat transfer
EXFR	-	effectiveness of cross flow heat exchanger
TAOSP	-	air temperature at outlet of single-phase heat transfer section
TAO	-	evaporator air outlet temperature
TRO	-	evaporator refrigerant outlet temperature
SUPER	-	refrigerant superheat at evaporator outlet
PD	-	refrigerant pressure drop through evaporator
HTP	-	refrigerant two-phase heat transfer coefficient
XMA	-	air mass flow rate (lb/hr)
XMR	-	refrigerant mass flow rate (lb/hr)
GA	-	air mass flow rate per cross-sectional surface area
GR	-	refrigerant mass flow rate per cross-sectional surface area
HA	-	air side heat transfer coefficient in evaporator
HRV	-	refrigerant vapor heat transfer coefficient
QE	-	evaporator total heat removal
QLAT	-	latent heat removal in evaporator
RDAIR	-	air side pressure drop across evaporator
QREQ	-	required evaporator heat removal (based on heat gains detailed above)
CHK	-	fraction describing difference between evaporator calculated heat removal and heat gains, relative to heat gains

TABLE A-2. - List and definition of input variables

```
C***** DESCRIPTION OF INPUT VARIABLES
C       NL - NUMBER OF LAYERS IN A COMPOSITE WALL
C       ICV - CONTROL VOLUME NUMBER:  1 = CASE CONTENTS;
C             2 = FRONT; 3 = BOTTOM; 4 = BACK
C       IIO - WALL INDICATOR:  1 = INSIDE WALL; 2 = OUTSIDE WALL
C       WHD(ICV,IIO) - WALL HEIGHT (DEPTH, FOR HORIZONTAL WALLS) (FT)
C       WT(ICV,IIO) - WALL LENGTH (FT)
C       WK(ICV,IIO,L) - THERMAL COND. OF WALL LAYER (BTU/HR-FT F)
C       WT(ICV,IIO,L) - THICKNESS OF WALL LAYER (FT)
C       EM1(ICV) - AVERAGE EMISSIVITY OF WALL SURFACE
C       EM2(ICV) - AVERAGE EMISSIVITY OF SURFACE WALL IS RADIATING TO
C       AA(ICV) - AREA OF PARALLEL SURFACE WALL IS RADIATING TO
C       TRAD(ICV) - AVERAGE TEMPERATURE OF SURFACE WALL IS RADIATING TO
C       DW(ICV) - AVERAGE DUCT WIDTH (FT)
C       DL - LIQUID LINE O.D. (FT)
C       DV - VAPOR LINE O.D. (FT)
C       THL - WALL THICKNESS, LIQUID LINE (FT)
C       THV - WALL THICKNESS, VAPOR LINE (FT)
C       RKML - LIQUID LINE THERMAL CONDUCTIVITY (BTU/HR-FT F)
C       RKMV - VAPOR LINE THERMAL CONDUCTIVITY (BTU/HR-FT F)
C       XO - DISTANCE FROM DISCHARGE AIR DUCT TO RETURN AIR DUCT (FT)
C       Y1 - VERTICAL DISTANCE FROM TOP OF DISCHARGE AIR DUCT TO BOTTOM
C            OF RETURN AIR DUCT (FT)
C       YO - INITIAL GUESS FOR TOP OF RETURN AIR DUCT (FT)
C            (NOT USED: OVERRIDDEN BY THE PROGRAM TO EQUAL 0)
C       DDA - TOTAL OPEN AREA OF DISCHARGE AIR DUCT (FT**2)
C       ZT - LENGTH OF LIQUID SUCTION HEAT EXCHANGER (FT)
C       THTA - ANGLE OF SOLDERED PART OF LIQUID LINE IN LIQUID SUCTION
C              HEAT EXCHANGER (RADIANS)
C       LSHX - NORMALLY = 1; = 0 FOR NO LIQUID SUCTION HEAT EXCHANGER
C       TS -  STORE AMBIENT TEMPERATURE (F)
C       RHC - RELATIVE HUMIDITY OF CASE AIR AFTER EVAPORATOR (FRACTION)
C       RHS - RELATIVE HUMIDITY OF STORE AIR (FRACTION)
C       RNU1 - KINEMATIC VISCOSITY OF CASE AIR  (FT**2/HR)
C       RNU2 - KINEMATIC VISCOSITY OF STORE AIR (FT**2/HR)
C       CPA1 - AVERAGE SPECIFIC HEAT OF CASE AIR (BTU/LBM F)
C       CPA - AVERAGE SPECIFIC HEAT OF STORE AIR (BTU/LBM F)
C       TPROD - AVERAGE PRODUCT TEMPERATURE IN CASE (F)
C       AMASS - AIR MASS FLOW RATE (LBM/HR)
C       CKA - AVERAGE THERMAL CONDUCTIVITY OF CASE AIR (BTU/HR-FT F)
C       QMISC - MISCELLANEOUS CONSTANT HEAT GAINS NOT CALCULATED
C               BY THE PROGRAM (BTU/HR)
C       WFAN - FAN MOTOR HEAT REJECTION (BTU/HR)
C       FSH - RADIATION SHAPE FACTOR FOR OPEN TOP RADIATING TO
C             CEILING
C       AF - AREA OF OPEN TOP USED IN RADIATION CALCULATION
C       EMFD - EMISSIVITY OF FOOD PACKAGES IN OPEN TOP
C       TOL - CONVERGENCE TOLERANCE-USED IN OPNTOP (USUALLY = 0.01)
C       NF - REFRIGERANT NUMBER (12,22,OR 502)
C       T3 - CONDENSING TEMPERATURE (F)
C       P5 - EVAPORATOR PRESSURE (PSIA)
C       TSUP - AMOUNT OF REFRIGERANT SUPERHEAT EXITING EVAPORATOR (F)
C       TSUB - REFRIGERANT SUBCOOLING AT EXPANSION VALVE (F)
C       RMREF - REFRIGERANT MASS FLOW RATE (LBM/HR) (NOT USED)
C       QAIRMUL - MULTIPLIER FOR TOTAL HEAT GAIN BY MIXING AND
C                 MOISTURE ENTRAINMENT IN OPNTOP
C       RLAMUL - MULTIPLIER FOR LIQUID-TO-AIR HEAT TRANSFER RESISTANCE
C                IN LIQUID SUCTION HEAT EXCHANGER
C       RLVMUL - MULTIPLIER FOR LIQUID-TO-VAPOR HEAT TRANSFER
C                RESISTANCE IN LIQUID SUCTION HEAT EXCHANGER
C       WETMUL - MULTIPLIER FOR MOISTURE FLOWRATE (WSM) IN OPNTOP
C       LPRINT - IF LPRINT = 2, DETAILED PRINTOUT IS OBTAINED
C       DOC - INSIDE DIAMETER OF EVAPORATOR TUBES ( A REMNANT
C             OF A PREVIOUS VERSION OF THE PROGRAM) (FT)
C       RTBEVP - NUMBER OF RETURN BENDS IN THE EVAPORATOR COIL
C       QUALCN - CONVERGENCE CRITERION FOR REFRIGERANT QUALITY USED
C                IN THE EVAPR ROUTINE (=0.005)
```

Conditions are set up for entry into the evaporator program. As the evaporator routine proceeds through its iterations, various heat transfer parameters are calculated and printed out. As mentioned in the body of the report, the moisture removal part of the evaporator routine has a slight problem in convergence.

Finally, all evaporator results are tabulated. Of most interest are air and refrigerant outlet temperatures, TAO and TRO, and the evaporator load, QE. A complete set of refrigerant and air conditions is again printed out. The required heat load, QREQ, or the total display case heat gain is printed out. As discussed in the report, the discrepancy between the two is due in large measure to the liquid suction heat exchanger.

At this point the program stops. It has provided all the necessary information to characterize the tub display case operation under the input conditions. What the program has not done is refined these initial estimates. To do so would require an additional loop taking the program to the beginning of the OPNTDP routine once again. While this refinement is beyond the scope of the current work, it does not require a major addition to the computer program.

HIGHLY ENERGY-EFFICIENT SUPERMARKET SYSTEMS

Task 2 Report

SYSTEM FABRICATION AND TEST RESULTS

TABLE OF CONTENTS

System Fabrication and Test Results

Section		Page
1.	INTRODUCTION AND SUMMARY	4-1
1.1	Refrigeration System Elements	4-1
1.2	Construction of the Test Facility	4-1
1.3	Test Program	4-2
1.4	Data and Test Results	4-2
1.5	Conclusions	4-3
2.	EXPERIMENTAL REFRIGERATION SYSTEM DESCRIPTION	4-4
2.1	Experimental Refrigeration System	4-4
2.1.1	Compressors and Compressor Rack	4-8
2.1.2	Condenser	4-11
2.1.3	Floating Head Pressure Control	4-13
2.1.4	Heat Reclaim Coil	4-15
2.2	Refrigeration Load Model	4-15
2.2.1	Walk-In Chest	4-16
2.2.2	Display Case	4-19
2.2.3	Brine Chiller Loops	4-19
2.3	Microprocessor-Based Electronic Control System	4-19
2.3.1	Data Acquisition Algorithm	4-22
2.3.2	Microprocessor-Based Electronic Control System Equipment	4-24
2.4	Experimental System Instrumentation	4-29
3.	TEST PROGRAM	4-37
3.1	Goals of the Test Program	4-37
3.2	Test Plan	4-37
3.2.1	Initial System Testing	4-38
3.2.2	Comparison Testing of Microprocessor-Based Electronic Control System and Pressure Control System	4-38
3.3	Data Reduction	4-41
3.4	Concepts and Operating Conditions Not Addressed in the Test Program	4-42

TABLE OF CONTENTS (Continued)

Section		Page
4.	DATA AND TEST RESULTS	4-44
4.1	Control Algorithm Optimization	4-44
4.2	Observation and Monitoring of Compressor Oil Flow	4-46
4.3	Control Systems Comparison Tests	4-46
4.4	Estimates of Annual Energy Savings	4-50
5.	RECOMMENDATIONS AND CONCLUSIONS	4-54
5.1	Conclusions	4-54
5.2	Recommendations	4-55
	APPENDIX A - DATA REDUCTION PROGRAM AND SAMPLE RUN	4-57

LIST OF ILLUSTRATIONS

Figure		Page
1	Experimental refrigeration system	4-5
2	Elements of the experimental refrigeration system	4-6
3	The unequal parallel compressors mounted on the compressor rack	4-9
4	Compressor rack housing details of the electrical control panel	4-10
5	The roof-mounted condenser with the McQuay Seasonmiser® floating head pressure control, subcooler, and receiver	4-12
6	McQuay Seasonmiser® system	4-14
7	Details of McQuay heat motor and pressure control valve	4-14
8	Refrigeration load model	4-17
9	Walk-in chest with two unit coolers	4-18
10	Multideck display case	4-20
11	Brine chiller loops	4-21
12	Flow chart of datalogging algorithm	4-23
13	Microprocessor-based controller and data logger	4-25
14	Microprocessor unit showing keyboard/display board	4-26
15	Microprocessor system configuration	4-27
16	Supermarket experimental refrigeration system instrumentation	4-31
17	Refrigeration load instrumentation	4-32
18	Suction pressure history of the unequal parallel compressor system with the microprocessor-based electronic control system	4-51
19	Suction pressure history of the unequal parallel compressor system with the mechanical pressure control system	4-52
A-1	Flow chart of a data reduction program	4-59
A-2	Sample printout of data reduction program	4-62

LIST OF TABLES

Table		Page
1	Unequal parallel compressor system capacity states	4-22
2	Main components of microprocessor system	4-28
3	Parameters recorded by microprocessor data acquisition system	4-35
4	Pressure settings for the microprocessor-based electronic compressor control	4-40
5	Mechanical pressure control settings for the unequal parallel compressors	4-40
6	Results of the comparison test between microprocessor-based electronic control and mechanical pressure control of the experimental refrigeration system	4-48
7	Frequency of occurrence of a given compressor operating state	4-49
A-1	Elements of the data reduction program	4-58
A-2	Output of the data reduction program	4-60

1. INTRODUCTION AND SUMMARY

This report describes the construction of an experimental refrigeration system for testing a novel refrigeration concept for supermarket application. A description of the test program for this refrigeration system is provided. Major recommendations and conclusions based upon the test results are also presented.

1.1 Refrigeration System Elements

The primary objective of this program has been to develop a novel refrigeration system for supermarket application offering the potential for substantial energy savings. Major elements of this system are:

a. Three parallel refrigeration compressors of different capacities with common suction and discharge headers

b. A floating head pressure control system that controls the operation of the condenser and allows the system to take advantage of low ambient temperatures

c. A microprocessor-based electronic control system that selects the proper compressor combination to meet the refrigeration load, thereby optimizing the operation of the system.

1.2 Construction of the Test Facility

An experimental refrigeration test facility was constructed for the purpose of testing the refrigeration system. The test facility consisted of:

a. A compressor rack containing three unequal parallel compressors and major control elements of the system

b. An air-cooled condenser equipped with a Seasonmiser® control system for floating head pressure control

c. A microprocessor capable of controlling the refrigeration compressor and acting as a data logger for data acquisition

d. A refrigeration load model designed to simulate the refrigeration load of supermarket display cases.

The test system was instrumented to measure the performance of the refrigeration system. Measurements included certain system temperatures and pressures, compressor power consumption, and refrigerant and brine flow rates. These system measurements were collected by the data logger portion of the microprocessor and transferred to a cassette tape for later analysis.

1.3 Test Program

A test program was developed for testing the multiple, unequal parallel compressor system. The major activities of this test program included:

a. Testing of the unequal parallel compressor combination - General operational data for the system was obtained. Comparison tests were made with both conventional and microprocessor-based control methods.

b. Optimization of the capacity control algorithm - All the parameters of the capacity control algorithm were examined and suitable values were determined.

c. Monitoring of oil flow in the system - Oil levels within the compressors and performance of the oil supply system were closely monitored during testing.

1.4 Data and Test Results

Data from the experimental refrigeration system was collected and evaluated. Major findings and results of the test program included:

a. The control algorithm was thoroughly evaluated. Major parameters were determined.

b. Observation of the performance of the oil supply system showed that this system did not perform satisfactorily. Problems were not encountered in lubricating the compressors; however, oil did accumulate in the 5-hp compressor crankcase.

c. Comparison of the experimental refrigeration system utilizing both conventional and microprocessor-based electronic control systems showed that energy savings for the compressors was improved by 10 to 12 percent using the microprocessor-based electronic control system.

1.5 Conclusions and Recommendations

Based on the results of the test program, certain conclusions and recommendations can be made.

The microprocessor-based electronic control of the unequal parallel compressor system was found to be superior to conventional mechanical pressure control techniques. The use of the advanced control system in conjunction with the unequal parallel compressor system should produce annual energy savings of approximately 26 percent which was projected for this system earlier in this program. Engineering evaluation of this system in an actual supermarket should demonstrate the actual energy savings of this system and should be the next step in this program.

Further testing should also be undertaken to evaluate the performance of the floating head pressure system. Integration of this system with the unequal parallel compressors should also be undertaken. A refrigeration system containing both of these elements should produce additional energy savings.

Other areas that should be examined in this program include the expansion of the control capabilities of the microprocessor; the cost-effectiveness of this unit can be improved. The operation of other components of the refrigeration system, such as the compressor and the thermal expansion valve, should also be examined for possible improvements.

2. EXPERIMENTAL REFRIGERATION SYSTEM DESCRIPTION

Descriptions of the major components of the experimental refrigeration system are presented in this section. Major subsystems that will be discussed include the refrigeration equipment, load model, microprocessor-based electronic control system, and instrumentation and data acquisition system. A photograph of the system is shown in Figure 1.

2.1 Experimental Refrigeration System

The flow of refrigerant through the experimental system is shown schematically in Figure 2. After leaving the components of the refrigeration load model, the refrigerant gas is at low temperature and pressure due to the suction action of the compressors. The gas is collected in the suction manifold, located on the compressor rack, and redistributed to the compressors where the temperature and pressure of the refrigerant are increased. The gas is then routed directly either to the condenser or to the heat reclaim coil and then to the condenser, depending upon the position of the heat reclaim valve. At the condenser, the refrigerant is condensed to a liquid. The liquid returns to the rack by one of two paths, depending upon the mode of operation in use. The experimental system is capable of operating in either a fixed or floating head pressure mode. In the fixed head pressure mode, the liquid refrigerant is piped directly to the compressor rack, passing through the head pressure regulator, which is a valve that sets the minimum pressure at which condensing occurs. At the rack, the liquid is distributed to the elements of the refrigeration load model through the liquid header. Excess liquid refrigerant is stored in the vertical receiver mounted on the rack. In the floating head pressure mode, the liquid refrigerant leaving the condenser passes through the Seasonmiser® control valve, used to control the operation of the floating head pressure system, to the receiver located on the roof next to the condenser. From the receiver, the liquid passes through an air cooled subcooler coil mounted beneath the condenser coil. From the roof, the liquid is piped to the liquid header, bypassing the head pressure regulator. From the liquid header, the refrigerant is distributed to the components of the load model. Near each of these components is located a thermal expansion valve that serves to expand the refrigerant and initiate the refrigeration process.

Also shown schematically in Figure 2 are the major components of the experimental refrigeration system. The basic elements of the refrigeration system are the compressors and their associated support equipment, the condenser, including the Seasonmiser® components, and the heat reclaim coil.

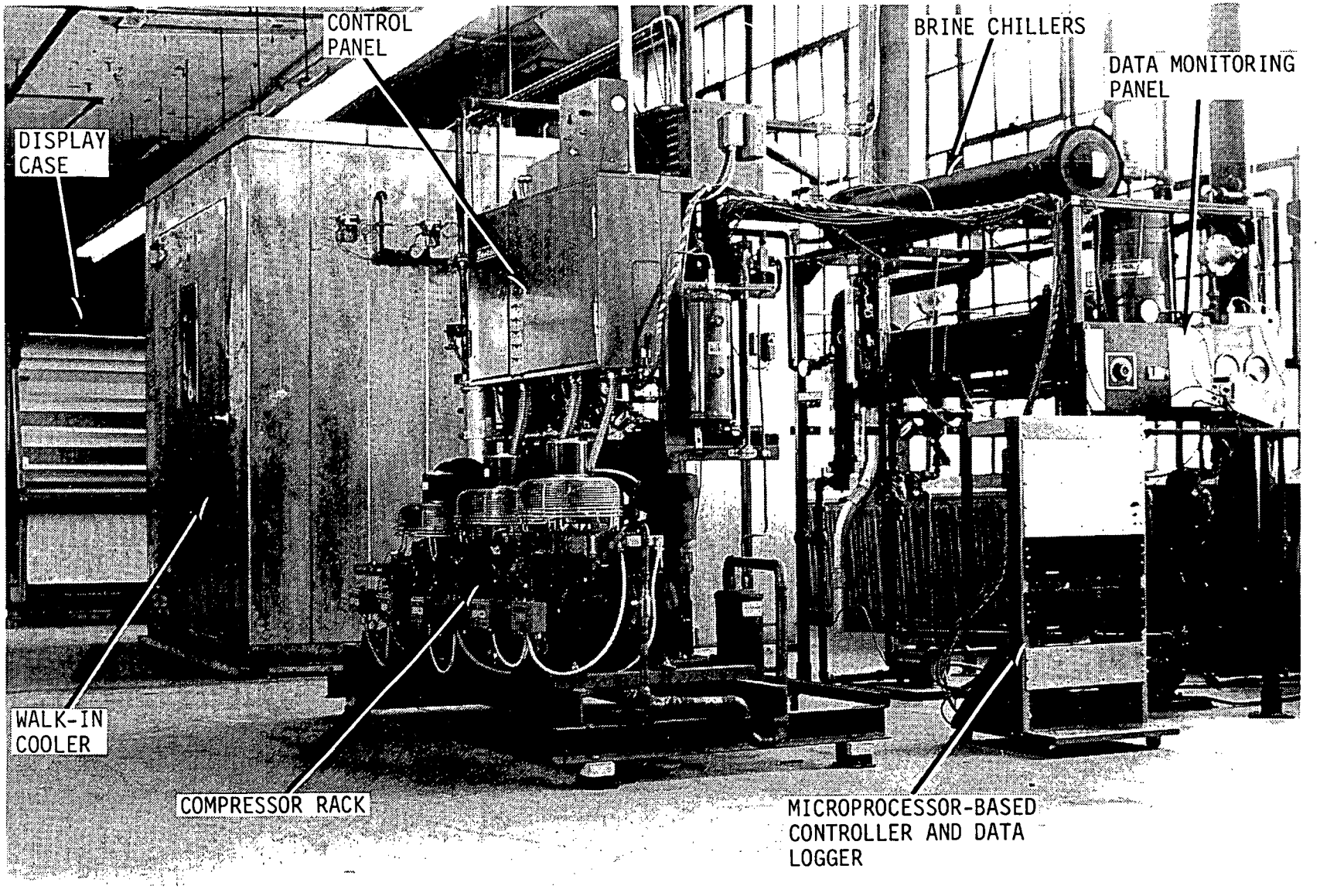

FIGURE 1. - Experimental refrigeration system.

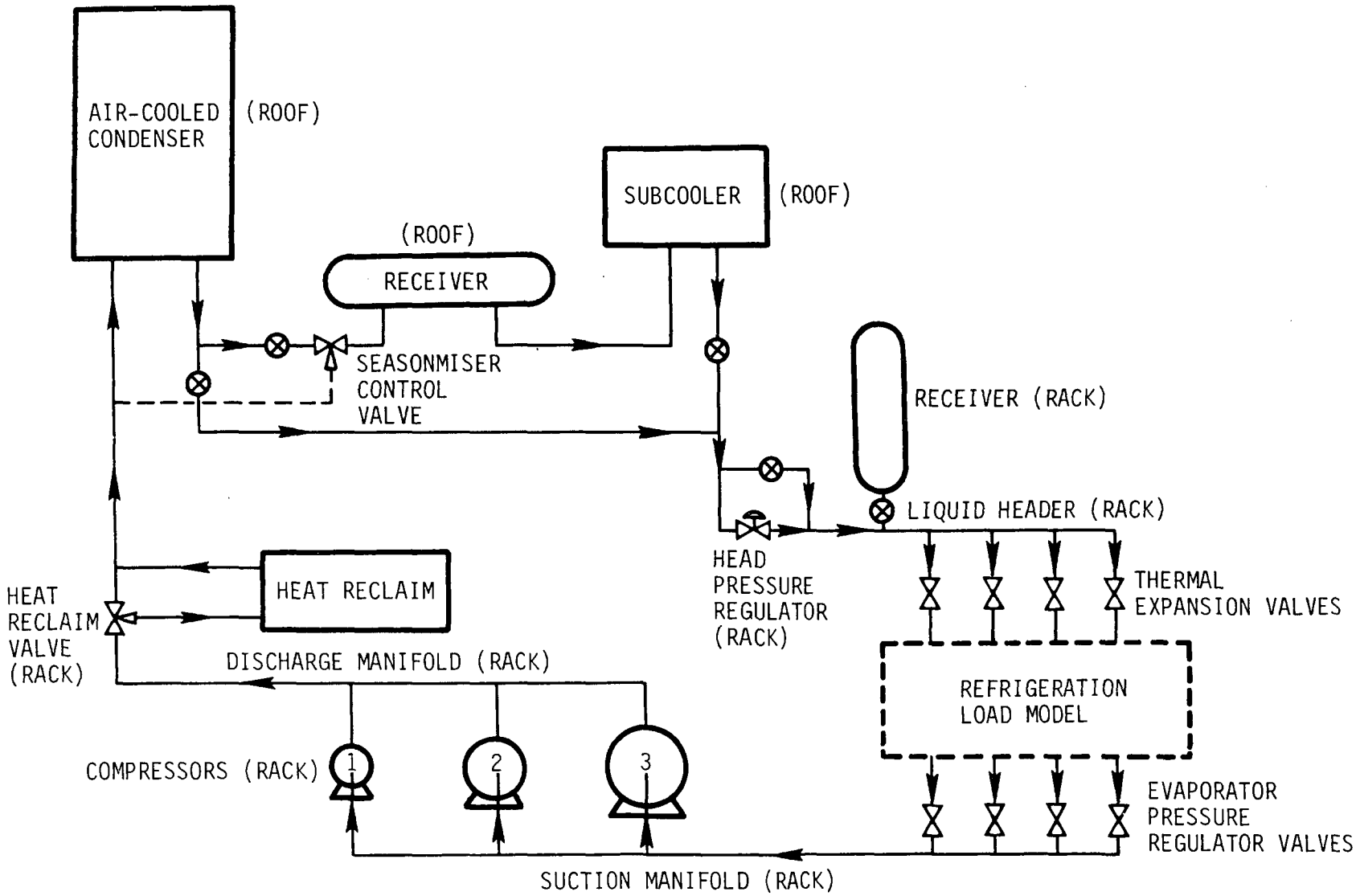

FIGURE 2. - Elements of the experimental refrigeration system.

The compressors are mounted on a rack where most of the associated system equipment is also located. Included with this equipment are the liquid and suction manifolds, the hot gas defrost components, the heat reclaim control valves, the compressor lubrication system, and all of the electrical components associated with the operation of the system. Most of the components on this rack are standard components employed on all multiple compressor systems manufactured by Friedrich. Modifications to this rack for the experimental test system consisted of equipping the rack with 5-, 10-, and 20-hp compressors, providing extra valving so that both floating and fixed condenser head pressure can be examined, adding the Seasonmiser® control components, and providing electrical wiring components for the integration of the microprocessor control.

The heat reclaim coil is used in a supermarket refrigeration system to utilize the heat rejected for refrigeration to supply space heating to the store. Upon demand for space heating, usually through a thermostat control, the flow of the discharge gas is directed through the heat reclaim coil where the refrigerant is cooled, sometimes to condensing temperatures. Heat is rejected from this coil to air which passes over the coil. The air is then introduced into the conditioned space to provide space heating. To heat the air to a reasonably high temperature, it is necessary to maintain the refrigerant at high pressure. In winter, the pressure of the refrigerant must be increased artificially for proper heat reclaim operation. This has a significant effect on the performance of the refrigeration system. For this reason, a heat reclaim unit is included in the experimental refrigeration system.

A standard air cooled condenser is used in the test system. The refrigerant gas is piped into the condenser where it is condensed, and in many cases, subcooled by the air passed over the condenser coils by three fans. The temperature and pressure at which condensing occurs are determined by the ambient temperature, the amount of coil surface, and the condenser controls employed. Since the condensing temperature and pressure greatly influence the operation of the refrigeration system, they were carefully examined in the experimental refrigeration system.

Piping was arranged so the system had the capability to operate in either a fixed or floating condenser, or head pressure mode. The major elements of this system consist of the condenser, Seasonmiser® control valve, the receiver, and the subcooler (Figure 2). When this system is in operation, no head pressure regulator is required. A bypass is provided on the compressor rack so that the flow of refrigerant is directed around the head

pressure regulator. The receiver, located on the rack, is isolated from the piping system when floating head pressure is used. This receiver is an integral part of the ambient, subcooling, fixed head pressure system but is not required for floating head pressure operation. When fixed head pressure operation is desired, the Seasonmiser® valve, the roof-mounted receiver, and the subcooler must be isolated from the system. This is accomplished by providing isolation valves on these components and bypass piping as shown in Figure 2. The head pressure regulator is used in the fixed head pressure system. Therefore, the bypass located on the skid is shut off and the rack-mounted receiver is utilized.

2.1.1 Compressors and Compressor Rack

From the analysis work performed earlier in this program, the sizes of the three unequal parallel compressors used in the test system were selected for this system. Three compressors consisting of 5-, 10- and 20-hp units were selected. As is the standard practice for supermarket refrigeration, the compressors were mounted on a rack that also contains most of the significant piping and controls of the refrigeration system. The compressors mounted on the compressor rack are shown in Figures 3 and 4.

The operation of the compressors can be controlled by either the mechanical compressor controls (Figure 3) or by the microprocessor-based electronic control unit. In either case, the compressors are turned on or off according to the value of the suction pressure at the inlet of the compressors. The differences between the two controls are that the mechanical control is not as sensitive to changes in suction pressure and it does not make a logical decision as to which compressors should be operating at any given time.

The remainder of the electrical controls for the system are contained in the control panel located above the compressors (Figure 4). The electrical power for the compressors is directed through this panel to circuit breakers and then through the compressor contactors. These contactors are either opened or closed in response to the pressure controls. The system is also equipped with the compressor time delays which are used to ensure that a minimum off time occurs between compressor cycles and, in this fashion, prevents the compressors from short cycling. The control panel also contains the defrost timers used for hot gas defrost. These timers consist of a 24-hr clock that can be set to trip a switch to initiate hot gas defrost for any particular refrigeration circuit. A second timer that controls the length of the defrost is also actuated by the 24-hr timer. When this second timer has reached its set time (4 to 120 min), the defrost is terminated.

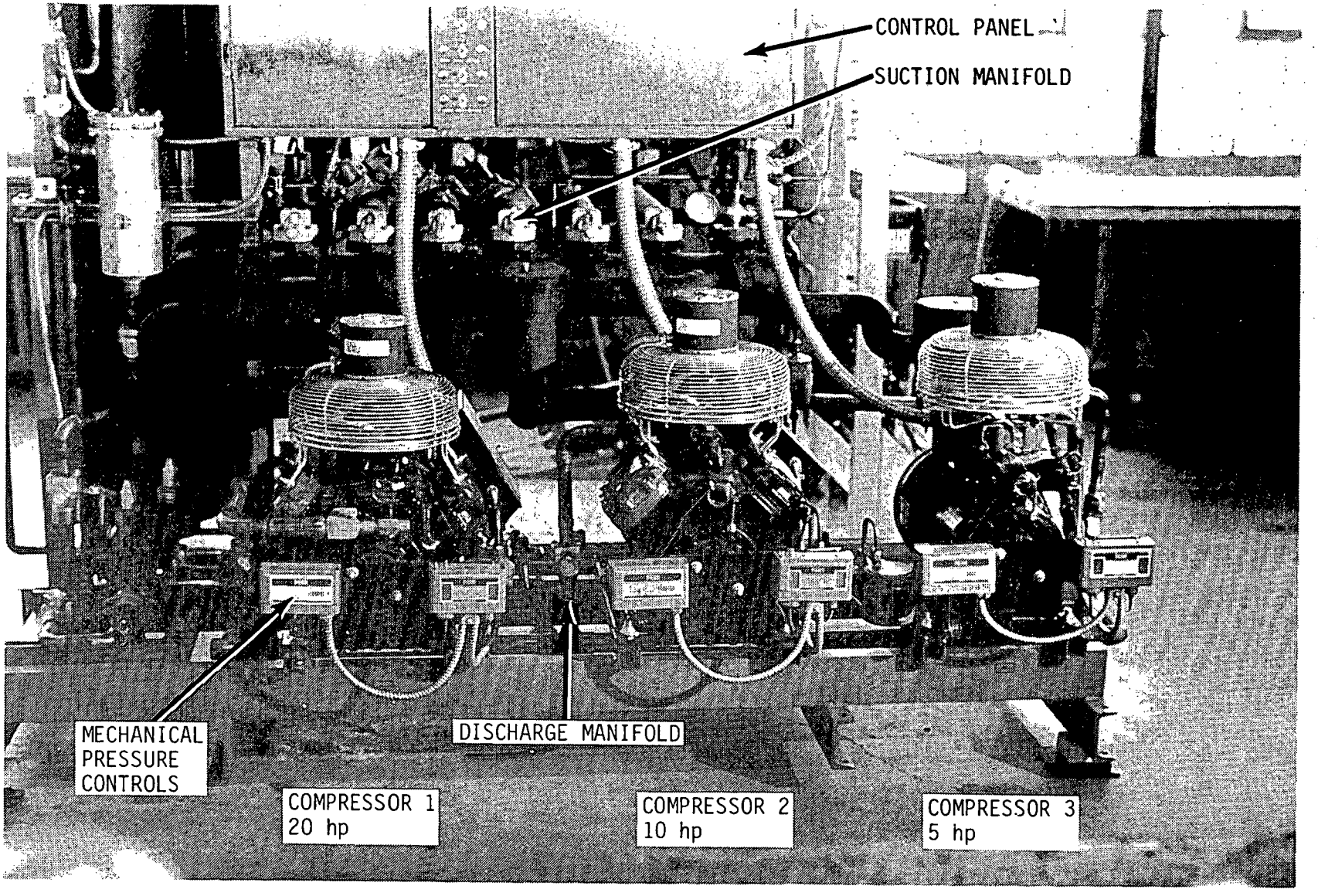

FIGURE 3. The unequal parallel compressors mounted on the compressor rack.

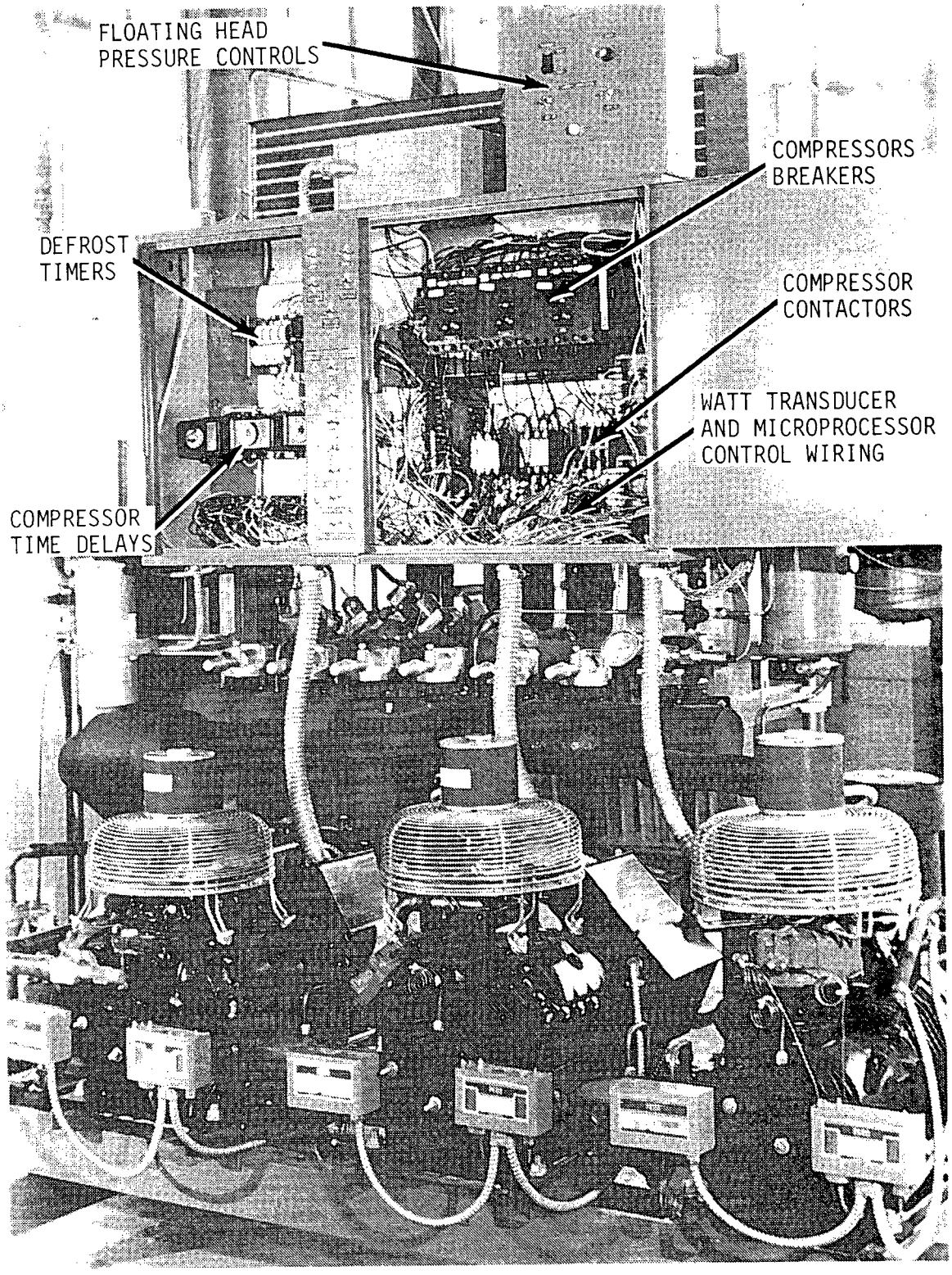

FIGURE 4. Compressor rack housing details of the electrical control panel.

Certain modifications were made to the control panel to adapt the compressor system for use with the microprocessor-based electronic control system and the Seasonmiser® floating head pressure system. Interface wiring was installed between the compressor contactors and the I/O board of the microprocessor. Bypass switches were installed so that the compressors could be controlled by either the mechanical pressure switches or the microprocessor-based electronic control system.

A separate control panel (Figure 4) was installed for operation with the floating head pressure system. The sensors used to control the head pressure valve were connected to the valve's heat motor through this panel. Also, relays necessary to connect the floating head pressure system to the heat reclaim and hot gas defrost wiring were installed in this panel.

Significant piping, contained on the compressor rack, includes the liquid header, suction header, defrost hot gas manifold, vertical surge-type receiver, head pressure regulator, and heat reclaim valve. The function of the liquid header is to distribute the liquid refrigerant to the refrigeration fixtures attached to the rack. In a similar fashion, the suction header collects the refrigerant gas returning from these same fixtures. On each suction line attached to the suction header is an evaporator pressure regulator (EPR) valve which is a back pressure regulator used to control precisely the pressure of the refrigeration evaporator in that particular circuit. The hot gas defrost header is attached to each of the suction lines by means of a pipe containing a solenoid valve. During defrost, the solenoid valve opens allowing hot gas to enter the suction line. The EPR valve for this same circuit is equipped with a solenoid that closes the EPR during hot gas defrost so that hot gas is not allowed to enter the suction header. The vertical surge-type receiver is used in conjunction with the fixed head pressure system and serves to store excess refrigerant flow from the condenser. The head pressure regulator is used primarily during winter operation. The regulator holds the pressure of the refrigerant in the condenser at a preset minimum value. The heat reclaim valve is a three-way valve that directs the flow of refrigerant either to the condenser or to the heat reclaim coil. This valve is actuated when space heat is required, at which time the flow of refrigerant is directed to the heat reclaim coil.

2.1.2 Condenser

An air-cooled condenser was used for the experimental refrigeration system. A photograph of the condenser mounted on the roof is shown in Figure 5. The condenser consisted of a large copper coil over which air is blown by three fans. The operation of the condenser is greatly influenced by ambient

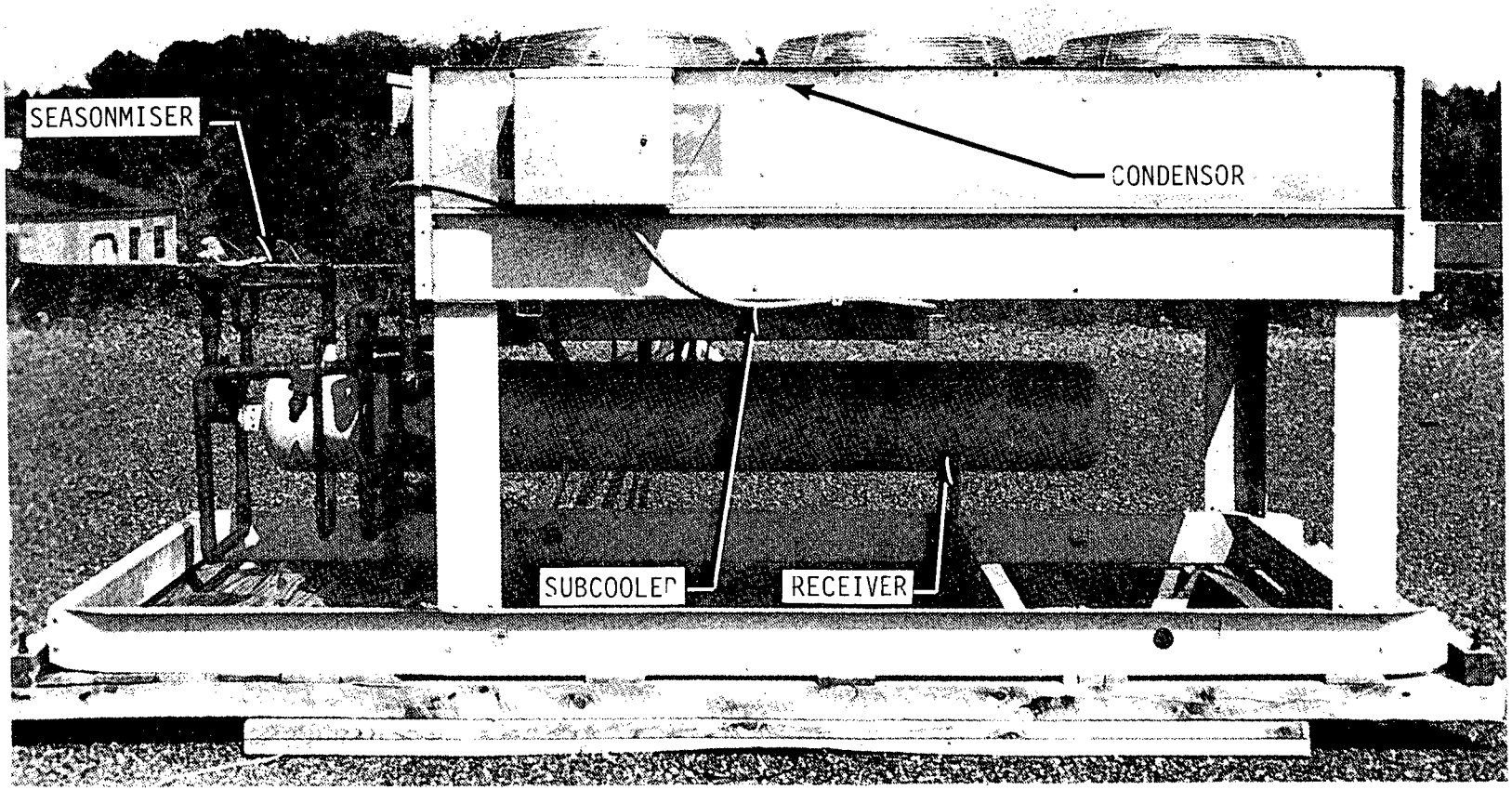

FIGURE 5. - The roof-mounted condenser with the McQuay Seasonmiser® floating head pressure control, subcooler, and receiver.

conditions and must be controlled. The experimental refrigeration system was equipped with three separate methods of controlling the operation of the condensers. These methods included fan cycling, head pressure regulation, and floating head pressure control. The floating head pressure control system will be explained in detail later in this section.

The fan cycling control consisted of attaching a pressure switch to the electrical power lines providing electricity to the fans. The pressure switch is activated by a drop in condenser pressure below the set points. The fans are in turn shut off by the pressure switch and are not started again until the condenser pressure rises to the desired value.

The head pressure regulator controls the condenser pressure by controlling the rate of flow of refrigerant leaving the condenser. If a rise in head pressure is desired, the head pressure regulator will restrict the flow of refrigerant so that liquid refrigerant backs up into the condenser. This loss of surface area in the condenser causes the condensing pressure to rise.

2.1.3 Floating Head Pressure Control

During the system design effort, it was decided that improvement and optimization of an existing system would provide a more efficient use of program time than the design of a totally new system. Of the existing systems considered, the Seasonmiser® system from McQuay-Perfex, Inc., was found to be the most versatile. This system ensures sufficient subcooling to prevent refrigerant flashing before the expansion valve under any condenser pressure condition. It has the capability of automatically raising condenser pressure to preset levels for heat reclaim and hot gas defrost purposes. The McQuay system, although it is the best available floating head pressure system, is not widely used and has disadvantages which may prevent taking full advantage of ambient temperatures for condensing.

A photograph and schematics describing salient points of the McQuay system are shown in Figures 5, 6 and 7. Sensors in the liquid refrigerant, hot gas, and heat reclaim lines are connected to a heat motor which operates a three-way pressure control valve. This valve mixes hot gas with condensed liquid entering the receiver, thereby regulating receiver and condenser pressure. Under normal operation, the condenser pressure is allowed to float with ambient temperature. If the liquid line subcooling or the differential pressure across the expansion valve fall below preset minimum values, the sensors energize the heat motor which closes down the Seasonmiser® valve, reducing condensed liquid flow and increasing the condenser pressure.

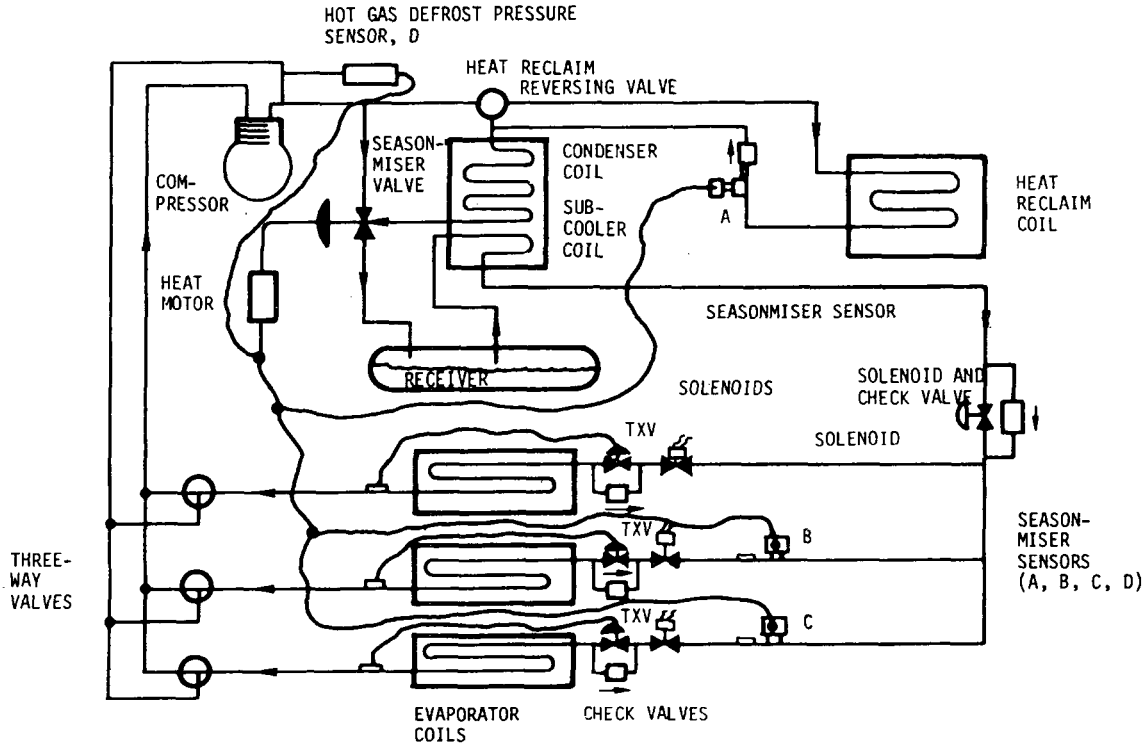

FIGURE 6. - McQuay Seasonmiser® system.

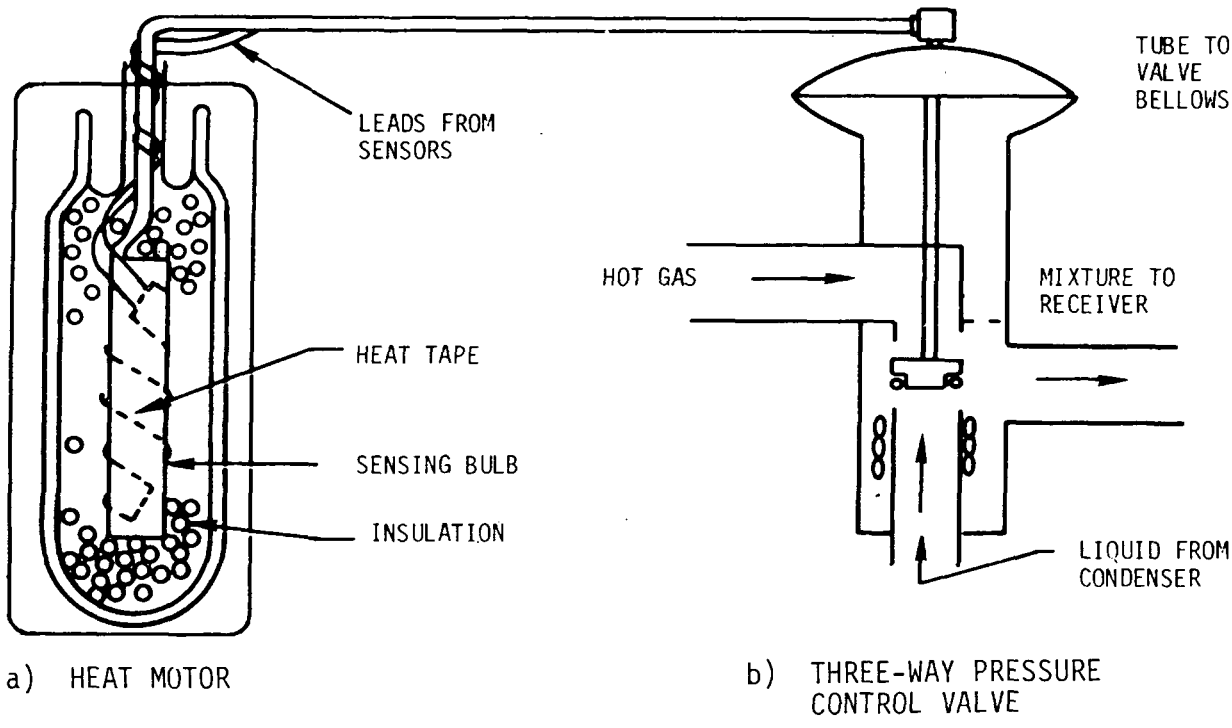

FIGURE 7. - Details of McQuay heat motor and pressure control valve.

Similar action occurs when additional heat from the reclaim coil is required, or when the system enters the hot gas defrost mode. A disadvantage of this method is that the condensed liquid is mixed with the hot gas in the receiver, thus raising its temperature and losing subcooling it may have gained in the condenser. For this reason, the refrigerant is piped through a subcooling coil located beneath the condenser coil. Air is passed over this coil reducing the temperature of the refrigerant.

2.1.4 Heat Reclaim Coil

The experimental refrigeration system is equipped with a heat reclaim coil to simulate the effect of heat reclaim on the refrigeration system. The refrigeration system is capable of operating in both first- and second-stage heat reclaim.

In first-stage heat reclaim, the refrigerant gas is passed through the heat reclaim coil where conditioned air is blown over the coil, heating the air to provide space heating. The temperature of the refrigerant gas is lowered, but little or no condensing occurs within the heat reclaim coil.

If additional heat reclaim is desired, the head pressure of the system is raised to the point where condensing does occur in the heat reclaim coil. This process is referred to as second-stage heat reclaim.

In the fixed head pressure system, the head pressure is elevated for second-stage heat reclaim by the head pressure regulator. This valve is equipped with dual pressure settings. When second-stage heat reclaim is requested, the valve setting changes to the higher pressure level, raising the head pressure of the system.

In the floating head pressure system, the floating head pressure control valve is used to raise the head pressure. When second-stage heat reclaim is requested, a relay is actuated which, in turn, actuates a pressure switch attached to the heat motor driving the control valve. The valve closes until the pressure matches the set point of the pressure switch which will then open, stopping the closing of the valve.

2.2 Refrigeration Load Model

The refrigeration load of a supermarket can be characterized by the following operating conditions:

a. Seasonal load variations due to change in outdoor ambient temperature and humidity

b. Display case cycling due to thermostatic control of display case temperature

c. Hot gas defrost of the display cases.

Each of these load characteristics will greatly influence the required compressor capacity, and must be considered when developing control techniques for the unequal parallel compressors.

The refrigeration load model that was employed to test the unequal parallel compressor refrigeration system is depicted in Figure 8. The refrigeration load was divided into four loops, consisting of:

a. One walk-in chest

b. One display case

c. Two brine chiller loops.

The walk-in chest is intended to represent approximately 25 percent of the refrigeration load. The chest is equipped with two unit coolers. These coolers can be defrosted with hot gas. The size of this load represents the maximum fraction of the refrigeration load that can be defrosted with hot gas. The temperature within the walk-in chest was maintained at a constant value by a thermostatically-controlled steam heater. The chest is also equipped with a humidifier which is supplied by a steam line that is controlled by a solenoid valve. The valve is opened when a humidistat within the chest indicates that the humidity has dropped below the level desired.

The display case is a standard Friedrich multideck freezer case that has a refrigeration load of 15,000 Btu/hr. The display case temperature is kept constant by the use of a thermostatic expansion valve and an evaporator pressure regulator (EPR) valve. The result of using these control valves is a fluctuating refrigerant flow that simulates display case cycling.

The remainder of the refrigeration load was modeled by two brine chiller-loops. Standard brine chillers are employed. A mixture of ethylene-glycol and water is circulated between the brine chiller and a steam heated heat exchanger. The amount of refrigeration load that can be accommodated by the brine chillers can be varied over a large range so that the chillers represent the primary means of controlling the total refrigeration load modeled.

2.2.1 Walk-In Chest

The walk-in chest (Figure 9) is used in the experimental refrigeration system to represent the refrigeration load of a line of refrigeration display cases. The chest is a standard refrigeration unit that has been equipped with two unit coolers each with a cooling capability of 30,000 Btu/hr. Since this total load of 60,000 Btu/hr exceeds the actual amount of refrigeration

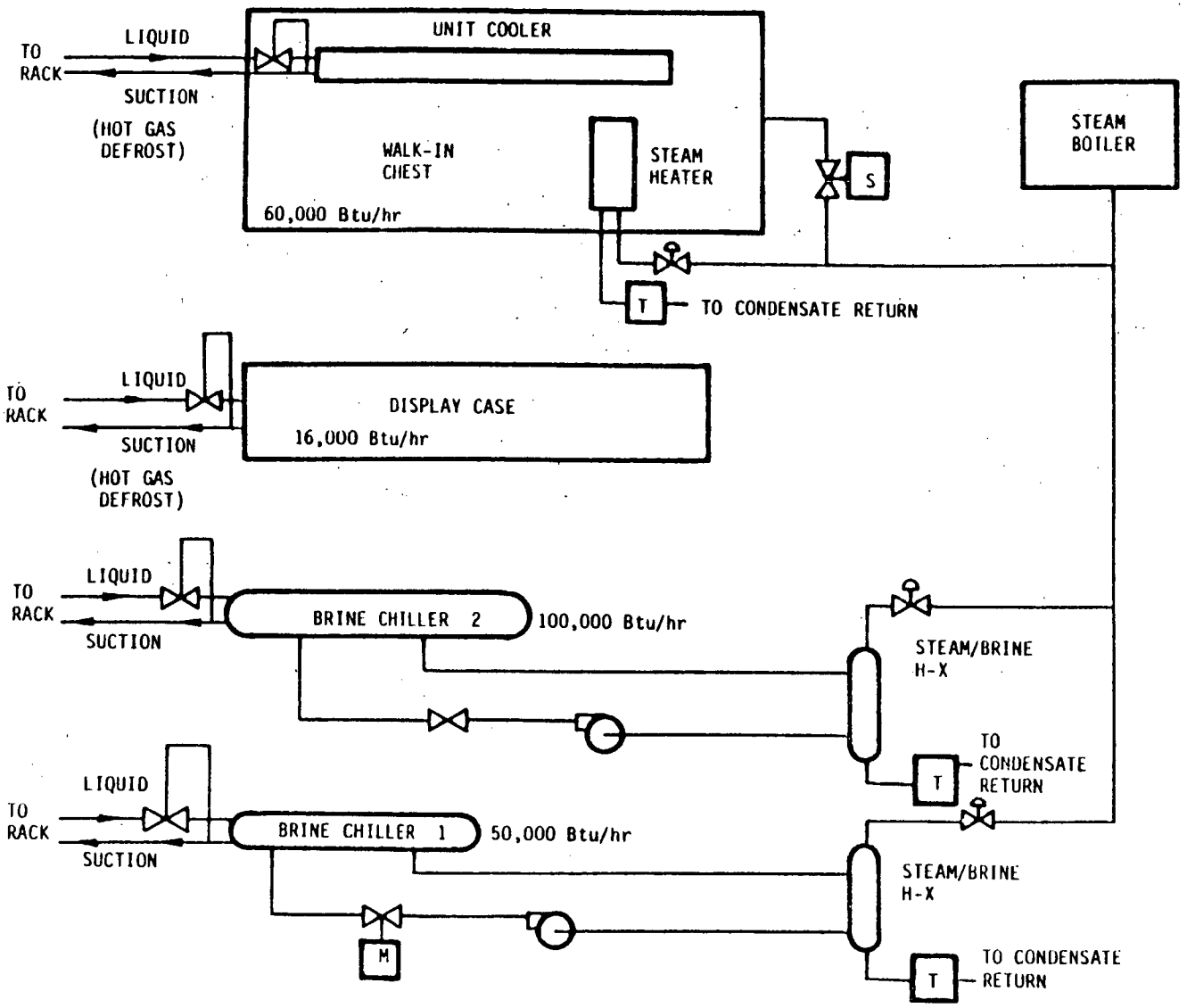

FIGURE 8. - Refrigeration load model.

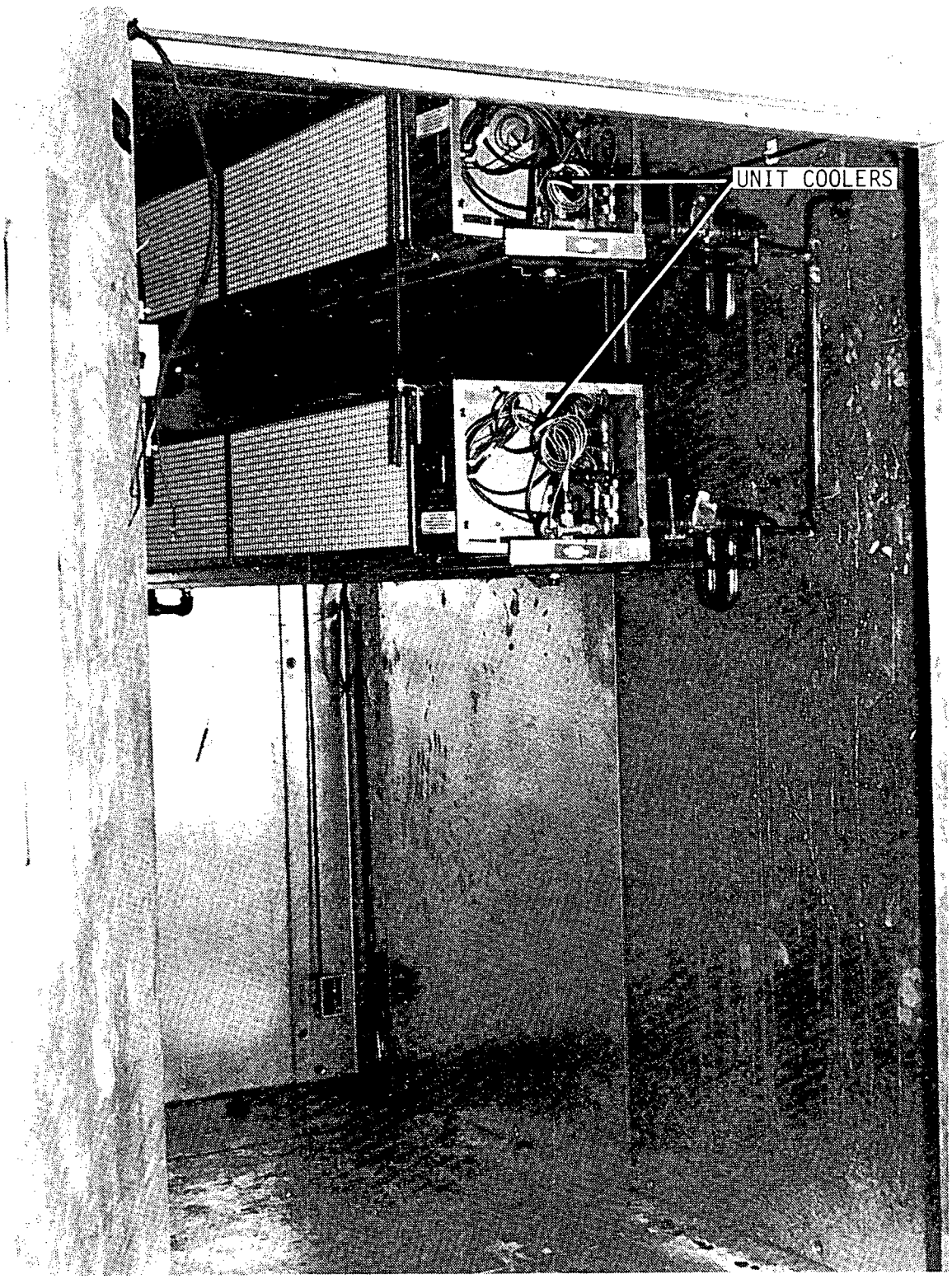

FIGURE 9. - Walk-in chest with two unit coolers.

required to maintain the chest at temperature, an additional heat source was added. A steam heated air heater was installed in the walk-in chest. The flow of steam to the heater was thermostatically controlled based upon the temperature of the chest.

The walk-in chest was equipped with hot gas defrost capabilities. Each of the unit coolers was equipped with a liquid bypass line so that the hot gas flow could bypass the thermostatic expansion valves. The air flow across the unit coolers was thermostatically controlled so that the air flow stopped when the unit cooler temperature rose during hot gas defrost. To vary the frost load conditions of these coils, the walk-in chest was equipped with a humidification system. Steam was injected into the walk-in chest to provide desired humidity. The amount of steam injected was controlled by a humidistat located in the walk-in chest.

2.2.2 Display Case

A standard multideck display case was supplied for the experimental refrigeration system by Friedrich (Figure 10). The refrigeration load provided by this unit varies between 10,000 and 16,000 Btu/hr, depending upon ambient conditions. The display case was equipped for hot gas defrost.

2.2.3 Brine Chiller Loops

The elements of the two brine chiller loops employed in the test system are shown in Figure 11. Each of the brine chiller loops consists of a brine chiller, a steam heated heat exchanger, a circulation pump, and associated piping.

The refrigeration load is provided by cooling a mixture of ethylene-glycol and water on the shell side of the brine chiller. The chilled brine is then pumped to a steam heated shell and tube heat exchanger where it is heated. It is then circulated back to the brine chiller to complete the loop. The amount of refrigeration load provided by the chiller is controlled by monitoring the flow of steam to the heat exchanger. This technique was found to be fairly precise so that the brine chillers were used to adjust the total refrigeration load to be met by the refrigeration system.

2.3 Microprocessor-Based Electronic Control System

The microprocessor-based electronic control system was designed and constructed for use in the experimental refrigeration system. The microprocessor unit is capable of providing control of the three unequal parallel compressors while simultaneously providing data acquisition by recording and storing data measured by the system instrumentation.

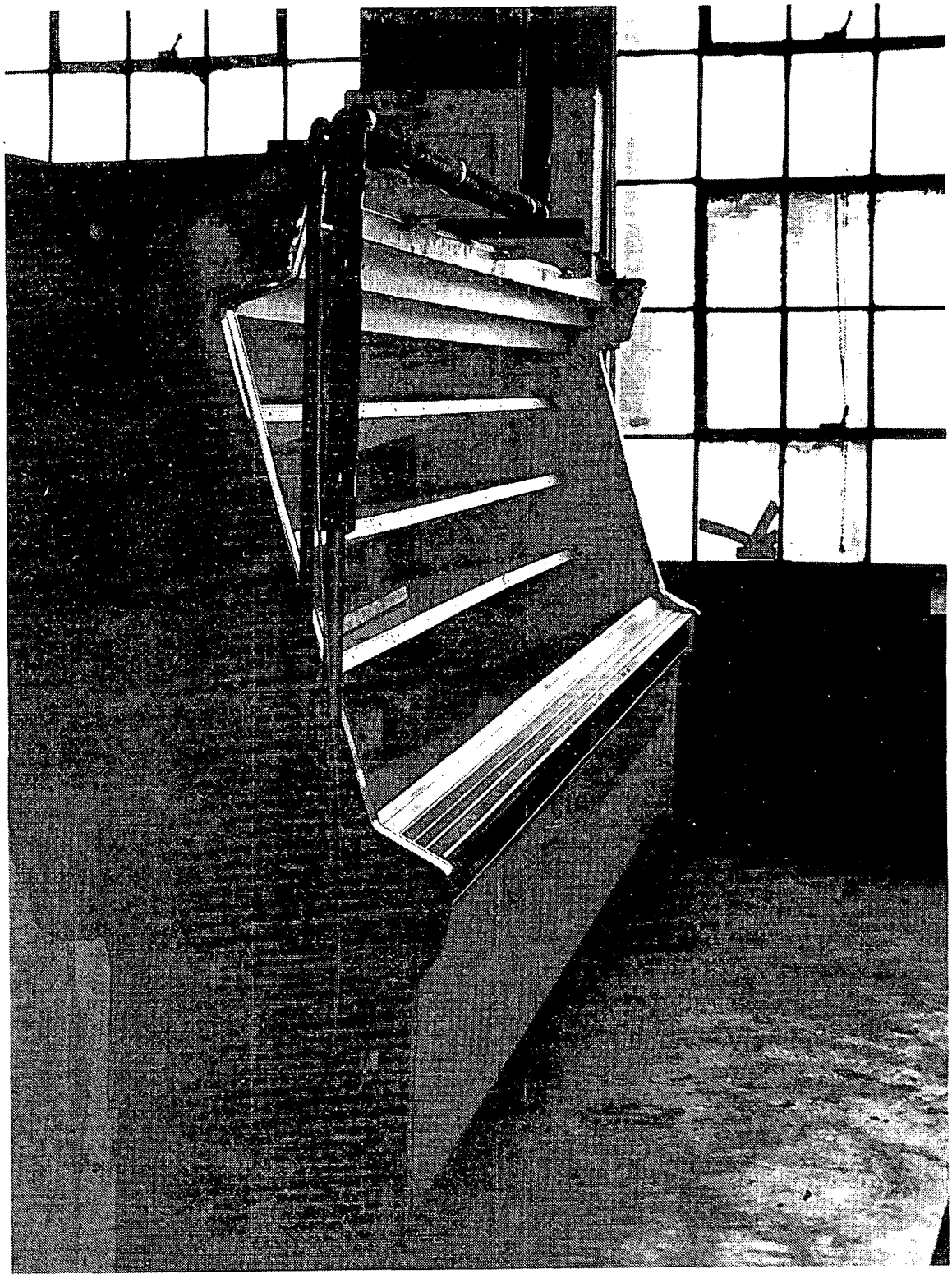

FIGURE 10. - Multideck display case.

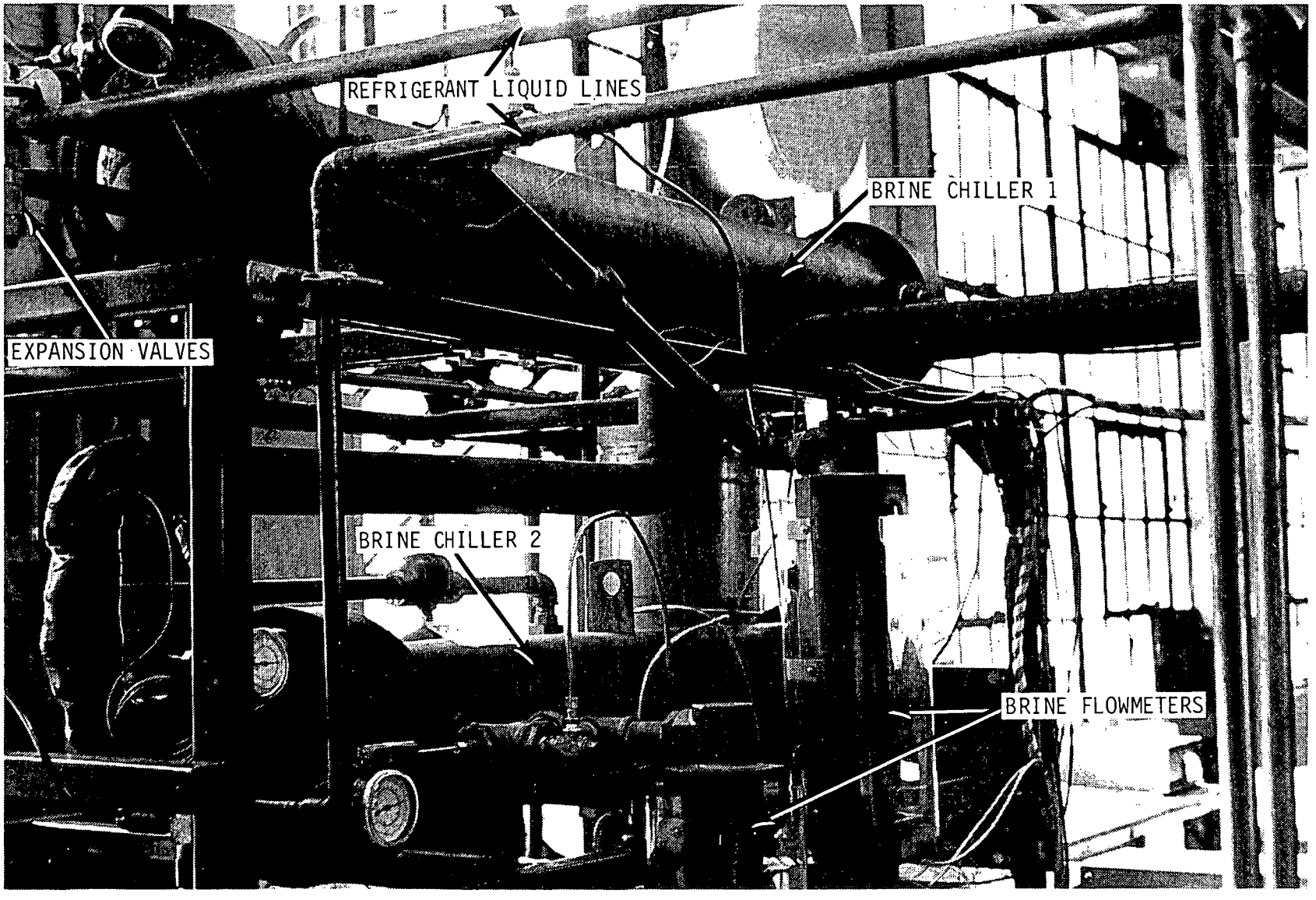

FIGURE 11. - Brine chiller loops.

The three-unequal-compressor system can operate in eight different modes or capacity states, as shown in Table 1. The capacity state, denoted by L, corresponding to the operating load, is selected by comparing the operating suction pressure to predetermined cut-in or cut-out pressure levels, denoted by PCI and PCO, respectively.

To assure adequate lubrication and lengthen compressor life by preventing short cycling, the compressor manufacturers require that a compressor operate for a minimum time period (2 to 3 min) each time it is turned on. In this capacity control algorithm, the compressors are kept off for a minimum time period, ensuring that when they come on, they will have to operate for a minimum time period of the same order.

The main operating variables in the algorithm are the preset cut-in and cut-out pressures, and the cycle time that determines how often the operating pressure is checked.

2.3.1 Data Acquisition Algorithm

The microprocessor used for compressor control also has the capability of acting as a data logger to collect system operating data from the system instrumentation. The algorithm used to serve this function is shown in the flow chart presented in Figure 12.

TABLE 1. - Unequal parallel compressor system capacity states

Capacity State (L)	Compressor size (hp)			Percent of Total Capacity
	5 hp	10 hp	20 hp	
0				0.0
1	X			14.3
2		X		28.6
3	X	X		42.9
4			X	57.1
5	X		X	71.4
6		X	X	85.7
7	X	X	X	100.0

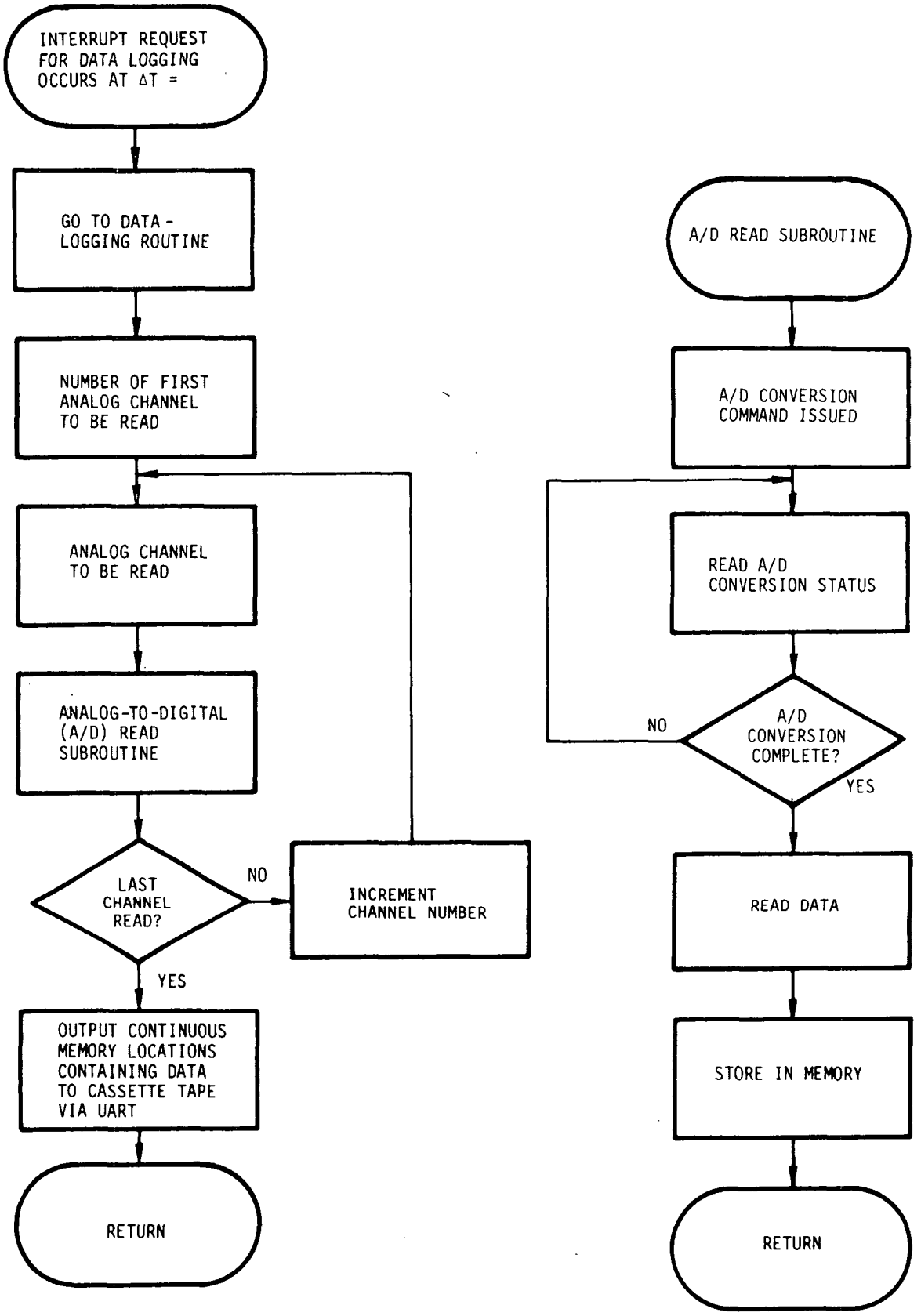

FIGURE 12. - Flow chart of datalogging algorithm

The system data is continuously fed to the microprocessor through an Analog to Digital (A/D) conversion board. The A/D read subroutine continuously scans the A/D board and moves the contents of this board to preselected memory locations. During the data logging routine, which occurs at 1-min intervals, the contents of these selected memories are organized into a string of digital bytes, each representing an appropriate analog change. The string of bytes is then sent to a cassette recorder that records the data onto a cassette tape. The cassette tape is a permanent record of the data that can be analyzed by a computer program written for data reduction.

2.3.2 Microprocessor-Based Electronic Control System Equipment

The microprocessor-based electronic control system, shown in Figures 13 and 14, was designed and constructed to implement the software discussed in the Task 2 Design Report. A block diagram describing the configuration of the components of the microprocessor-based electronic control system is provided in Figure 15. The function of each of these components is described in Table 2. The top of Figure 15 shows components internal to the microprocessor itself. The core of the system is the central processing unit (CPU) and the random access and read-only memories (RAM and ROM). A keyboard display (Figure 14) is provided to facilitate on-line input and output. Other components include a real-time clock, a programmable timer/counter, and a priority interrupt card. These components allow the central processor control to transfer to different algorithms stored in ROM. The RAM is the active storage area where changing system data, such as instrumentation readings, are temporarily stored during performance.

Components listed below the STD BUS line represent the input/output action of the microprocessor system. Analog measurements of desired quantities are translated to digital format via an analog to digital converter. Digital output to the compressor is provided by an optically isolated output board, while a Universal Asynchronous Receiver/Transmitter (UART) allows serial transmission of large amounts of data to peripheral devices.

The system is designed around the STD BUS which provides communication channels for all microprocessor components. The STD BUS allows a full and modular layout of different component boards, and can accommodate several microprocessor boards on the same system. The STD BUS was chosen because of its widespread usage, large availability of compatible components, and modular flexibility.

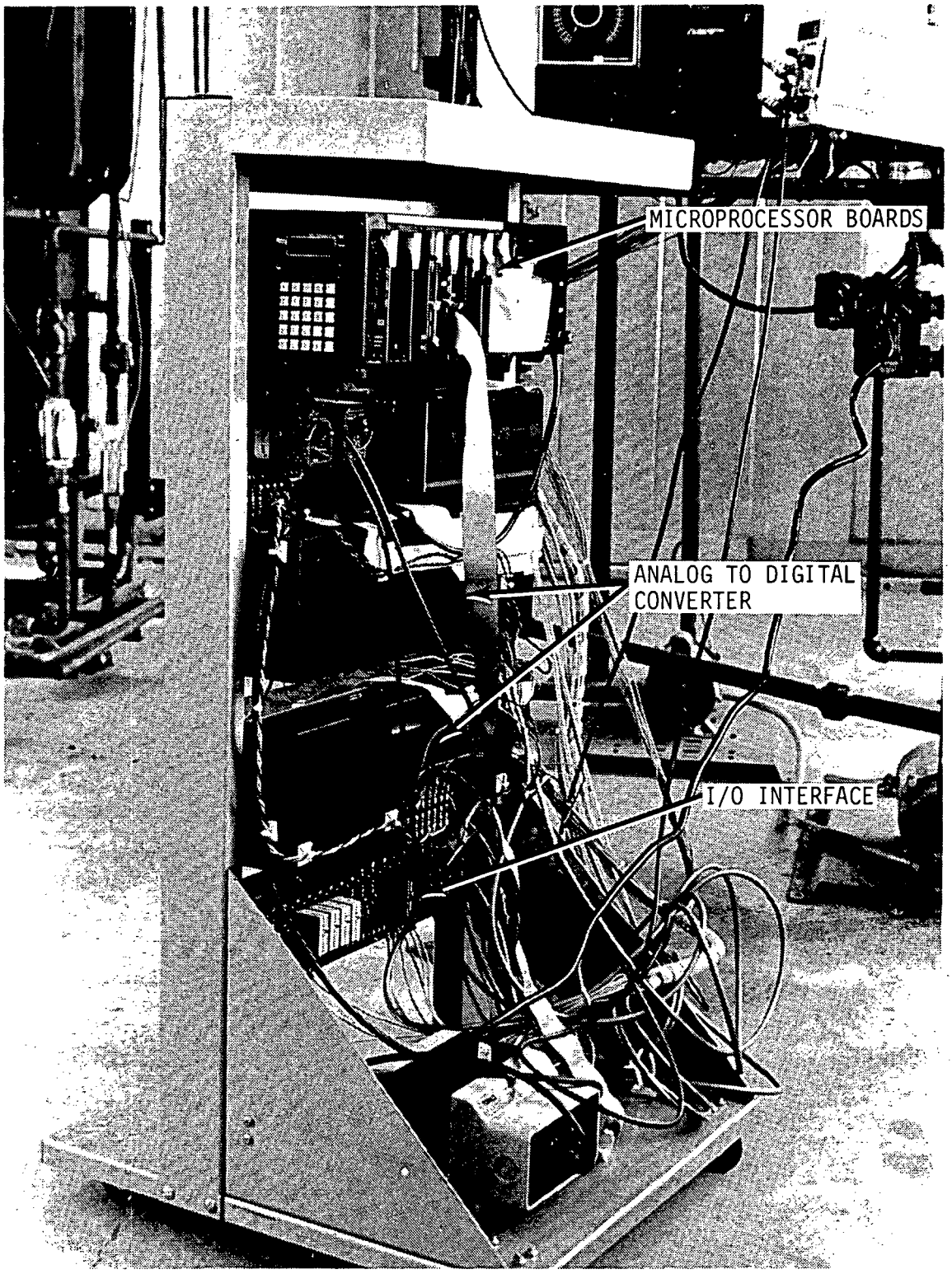

FIGURE 13. - Microprocessor-based controller and data logger.

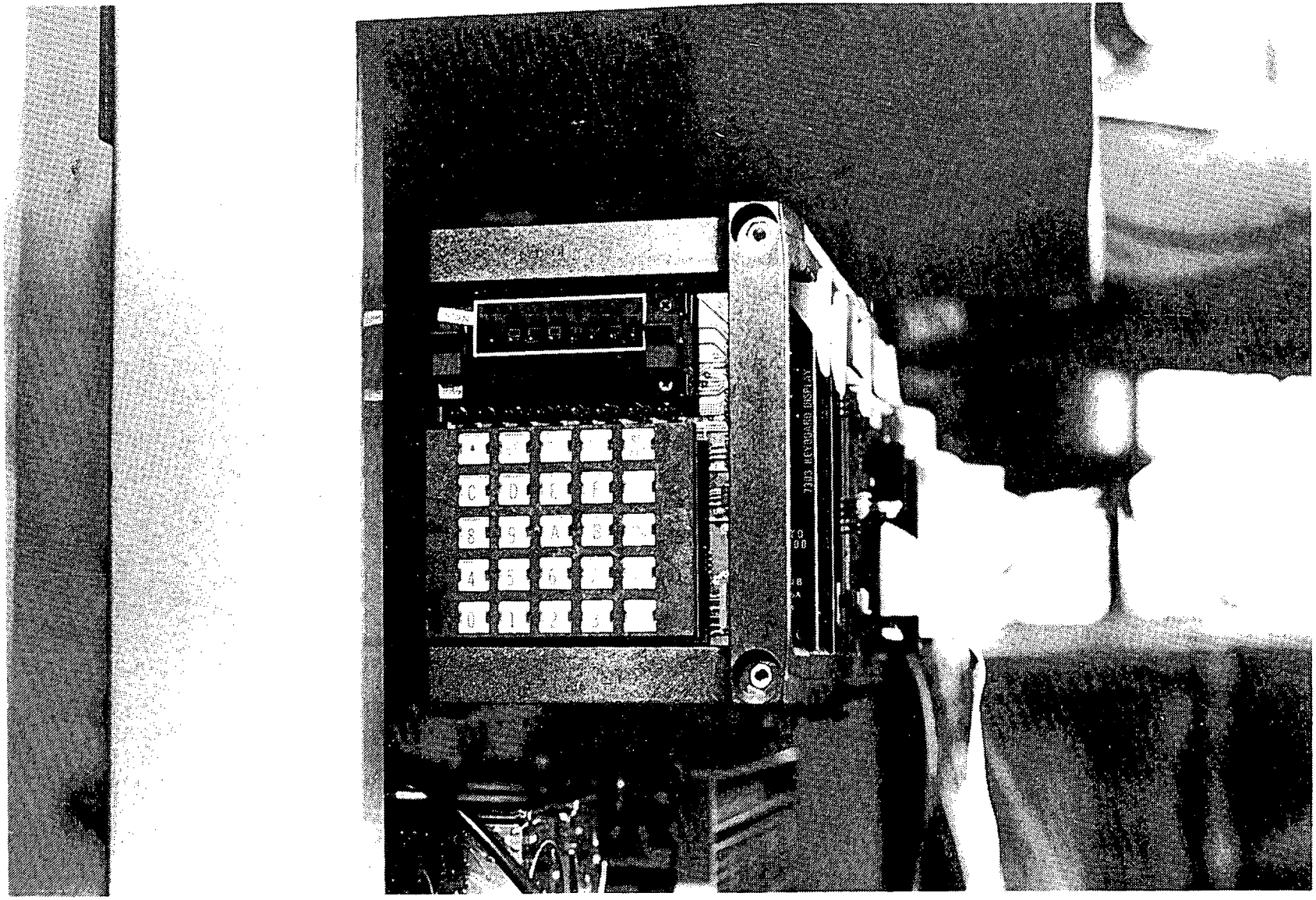

FIGURE 14. Microprocessor unit showing keyboard/display board.

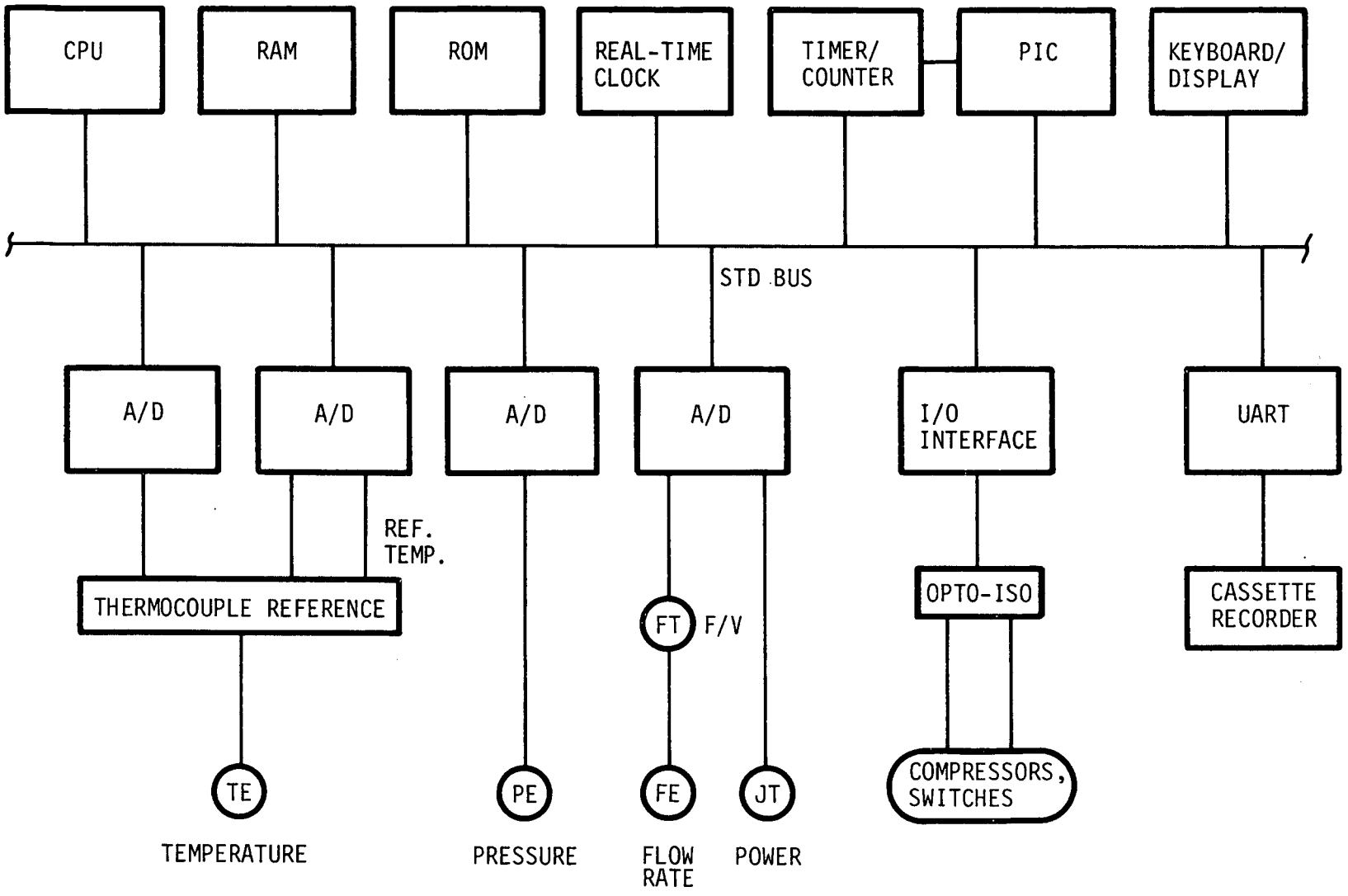

FIGURE 15. - Microprocessor system configuration (see Table 2 for component description).

TABLE 2. - Main components of microprocessor system

Component	Manufacturer	Function
STD-BUS - Standard Bus	(Pro-Log Corporation)	Bus line for all communication internal to the processor, including transfer of control, data, and address locations
CPU - Central Processing Unit	(Pro-Log Corporation)	Intel 8085 Microprocessor with supporting hardware
RAM - Random Access Memory	(Enterprise Systems Corporation)	Volatile memory that can be written to or read from
ROM - Read Only Memory	(Pro-Log Corporation)	Nonvolatile memory that can be read from only
Real-Time Clock	(Enlode Corporation)	Crystal-controlled clock which generates calendar and time-of-day data
Timer/Counter	(Pro-Log Corporation)	Programmable multichannel timer/counter for interrupt service and timing routines
PIC - Priority Interrupt Card	(Pro-Log Corporation)	Arranges interrupt requests in order of importance and generates single interrupt requests for the microprocessor
Keyboard/Display	(Pro-Log Corporation)	Control panel card that provides data input and display capability
Analog-to-Digital Converter	(Data Translation, Inc.)	Converts analog input signals to digital format for microprocessor
I/O (Input/Output) Interface	(Pro-Log Corporation)	Provides electrical interface and address decoding for optically isolated input/output interface board
OPTO-ISO - Optically Isolated Input/Output Board	(Opto 22)	Provides photo-isolated interface between microprocessor and field control components
UART - Universal Asynchronous Receiver/Transmitter	(Pro-Log Corporation)	Provides serial data transmission for peripherals
Cassette Recorder	(ADPI, Inc.)	Allows permanent storage of logged data files, and communication with remote computer for data reduction

Most of the boards were purchased from Pro-Log Corporation. Pro-Log offers one of the widest selections of microprocessor board components available on the market. Pro-Log also provides full sets of comprehensive manuals that include extensive documentation on every component. FMA engineers have worked with Pro-Log in the past, are familiar with Pro-Log equipment, and have been pleased with equipment performance. While Pro-Log establishes the industry prices for major components, there are cases where components are available from other manufacturers at substantially lower prices. This was the case with the battery-backed RAM boards, which were purchased from Enterprise Systems.

The CPU chosen for the current application is the Intel 8085. This is a medium-capability, medium-priced board which offers good flexibility and is well supported. It is commonly used and compatible with a wide range of peripheral equipment.

Two cassette read/write recorders have been purchased from Analog and Digital Peripherals, Inc. (ADPI). The recorders have intelligence capability and require a minimum of software to be integrated into the microprocessor system. Most other recorder companies require separate instruments for reading and writing. The ADPI recorders have been evaluated from both a hardware and a software standpoint and found to meet all system specifications. Furthermore, the ADPI recorders offer a substantial cost savings over other systems investigated.

2.4 Experimental System Instrumentation

The performance of a refrigeration system is measured through the value of the energy efficiency ratio (EER) achieved by the system. The EER is defined as:

$$\text{EER} = \frac{\text{Refrigeration Supplied}}{\text{Energy Input}} \tag{2-1}$$

The EER can be considered as either an instantaneous or long-term quantity. In the instantaneous case, the refrigeration supplied is the rate at which refrigeration occurs and the energy consumption is the power consumed by the system at the instant of measurement. The long-term case is found by first summing the instantaneous refrigeration loads and power consumptions, measured at discrete time intervals, and then dividing the total refrigeration supplied by the total energy consumed. The total refrigeration supplied can be expressed as:

$$\text{Refrigeration Supplied} = \sum_{i=1}^{N} \dot{Q}_i \Delta\tau_i \tag{2-2}$$

where

$\dot{Q}_i$ = the instantaneous refrigeration load of the system

$\Delta\tau_i$ = the time interval between measurements

N = number of time intervals.

The total energy consumed is determined from:

$$\text{Energy Consumed} = \sum_{i=1}^{N} \dot{W}_i \Delta\tau_i \qquad (2\text{-}3)$$

where

$\dot{W}_i$ = the instantaneous power consumption of the system.

For this experimental refrigeration system it was necessary to correlate the performance of the system as measured by the EER with the control of the unequal parallel compressors and other operating conditions of the refrigeration system. Of particular concern are:

a. The condenser temperature and pressure

b. The ambient temperature

c. Refrigerant subcooling

d. Suction pressure and temperature

e. Compressor sequencing and operation.

All of these quantities will be measured simultaneously and in conjunction with the performance measurements.

The necessary measurements in the refrigeration system are shown in Figure 16. The pressure measurements are indicated by the letter (P). Pressure measurements were made by the use of pressure transducers. Temperature measurements are indicated by the letter (T) and were made by thermocouples. The power consumption of the compressors was measured by wattmeters, (W), attached to each compressor.

The refrigeration load measurements are shown in Figure 17. It was necessary to determine the refrigeration load of the walk-in chests, the display case, and each of the brine loops.

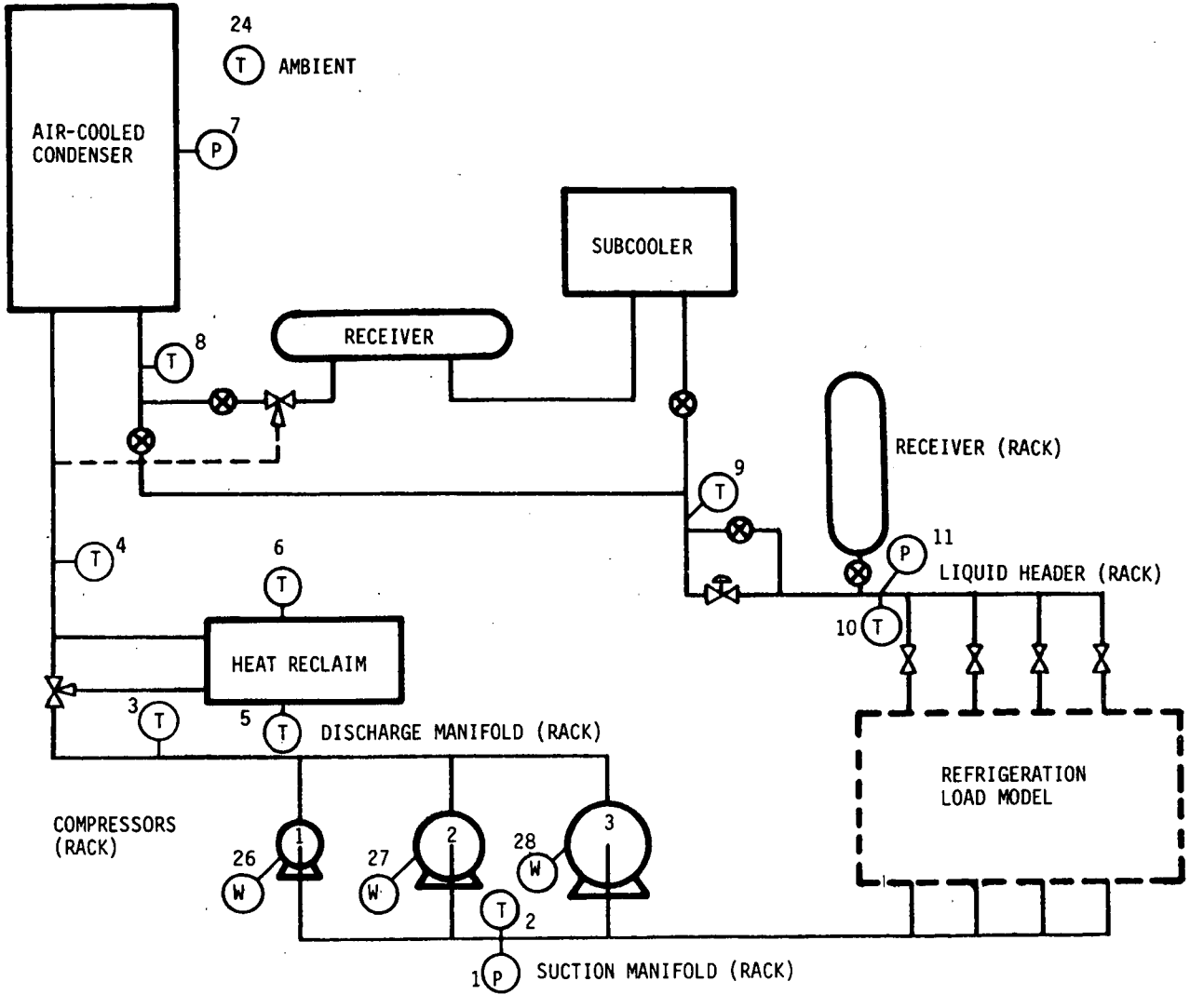

FIGURE 16. - Supermarket experimental refrigeration system instrumentation.

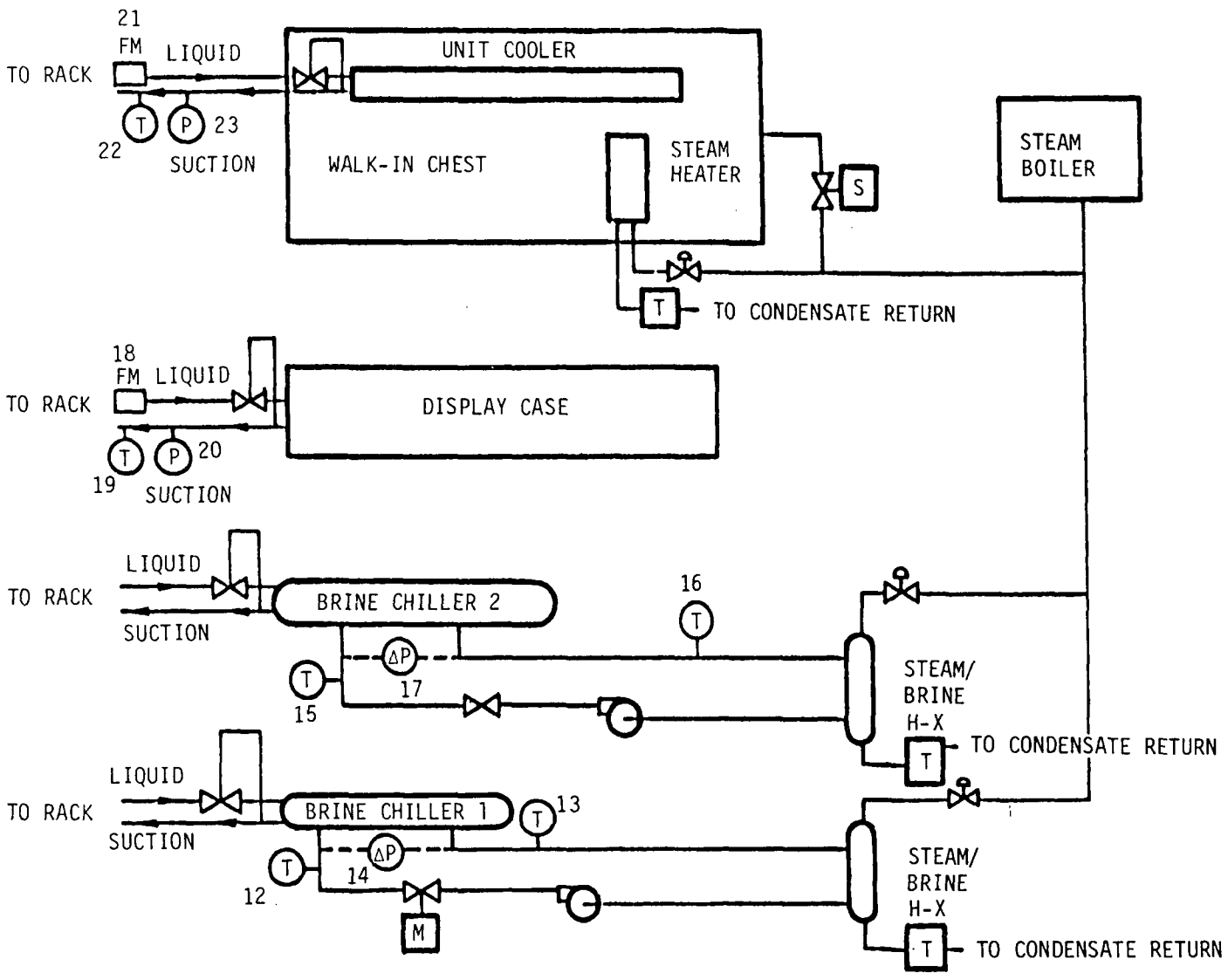

FIGURE 17. - Refrigeration load instrumentation.

The refrigeration load of each of the brine loops can be determined from:

$$\dot{Q}_{Bi} = \dot{m}_B C \quad (T_{in} - T_{out})_B \tag{2-4}$$

where

$\dot{Q}_{Bi}$ = the refrigerant load (Btu/hr)

$\dot{m}_B$ = the mass flow rate of the brine (lb/hr)

C = the specific heat of the brine (Btu/lb-^{o}F)

T_{in} = the inlet temperature of the brine (^{o}F)

T_{out} = the outlet temperature of the brine (^{o}F).

The inlet and outlet temperatures of the brine chiller are easily measured with thermocouples. The mass flow rate of the brine is determined by first measuring the pressure drop across the chiller with a differential pressure transducer. The flow rate through the loop can be correlated to this pressure difference and can therefore be determined at any time by measuring the pressure difference.

The refrigeration loads of the walk-in chest and the display case are determined from:

$$\dot{Q}_{wci} = \dot{m}_{wc} \, (H_{out} - H_{in})_{wc} \tag{2-5}$$

$$\dot{Q}_{dci} = \dot{m}_{dc} \, (H_{out} - H_{in})_{dc} \tag{2-6}$$

where

$\dot{Q}_{wci}$, $\dot{Q}_{dci}$ = the refrigeration loads of the walk-in chest and display case, respectively (Btu/hr)

$\dot{m}_{wc}$, $\dot{m}_{dc}$ = the mass flow rates of the refrigerant through the walk-in chest and display case, respectively (lb/hr)

H_{out} = the outlet enthalpy of the refrigerant (Btu/lb)

H_{in} = the inlet enthalpy of the refrigerant (Btu/lb).

The mass flow rate of the refrigerant is measured by a flowmeter located in the liquid line. The inlet and outlet enthalpies are determined by measuring the temperature and pressure at each of these points. The enthalpy can then be found in thermodynamic property tables for the particular refrigerant.

The need to obtain many data points at short intervals over long test periods necessitated an automatic data acquisition system. As a result, all data that are significant to the characterization of system operation and the calculation of the quantities described above were measured automatically at regular intervals. Electronic data measuring techniques which provide analog signals compatible with the microprocessor include standard components such as thermocouples, pressure transducers, and Watt transducers. In addition, an electronic refrigerant flowmeter was used in the display case and unit cooler lines. The flowmeter, manufactured by Bearingless, Inc., is a rotating element-type flowmeter which provides accurate measurement at a low pressure drop. Its frequency output must be converted to voltage via a frequency-to-voltage converter for microprocessor compatibility. The lower left portion of Figure 15 shows the electronic measurements input to the analog-to-digital connections of the microprocessor, including the thermocouple reference junction, reference junction temperature, and frequency-to-voltage converter.

The automatically monitored data points are summarized in Table 3. In addition to these measurements, visual output devices such as pressure gauges and digital thermometers were placed at strategic locations in the test system to allow effective manual setup and operation of the system.

TABLE 3. - Parameters recorded by microprocessor data acquisition system.

Data Point	Measurement	Purpose
1	Pressure, suction header	Capacity control; compressor performance
2	Refrigerant temperature, suction header	System monitoring
3	Refrigerant temperature, discharge header	Heat reclaim performance; system monitoring
4	Refrigerant temperature, entering condenser	Heat reclaim performance, condenser performance
5	Air temperature, heat reclaim inlet	Heat reclaim load
6	Air temperature, heat reclaim outlet	Heat reclaim load
7	Pressure, condenser	Condenser pressure control performance; compressor performance
8	Refrigerant temperature, condenser outlet	Subcooling; system monitoring
9	Refrigerant temperature, liquid line	System monitoring
10	Refrigerant temperature, liquid header	Subcooling; system monitoring
11	Pressure, liquid header	System monitoring
12	Brine temperature, brine chiller 1 inlet	Refrigeration load
13	Brine temperature, brine chiller 1 outlet	Refrigeration load
14	Brine pressure drop, brine chiller 1	Refrigeration load
15	Brine temperature, brine chiller 2 inlet	Refrigeration load

TABLE 3. - Parameters recorded by microprocessor data acquisition system (continued).

Data Point	Measurement	Purpose
16	Brine temperature, brine chiller 2 outlet	Refrigeration load
17	Brine pressure drop, brine chiller 2	Refrigeration load
18	Refrigerant flow rate, display case	Refrigeration load
19	Refrigerant temperature, display case outlet	Refrigeration load
20	Pressure, display case outlet	Refrigeration load
21	Refrigerant flow rate, unit coolers	Refrigeration load
22	Refrigerant temperature, unit cooler outlet	Refrigeration load
23	Pressure, unit cooler outlet	Refrigeration load
24	Air temperature, outside ambient	Condenser performance
25	Air temperature, indoor ambient	Display case performance
26	Power consumption, compressor 1	Compressor performance; system monitoring
27	Power consumption, compressor 2	Compressor performance; system monitoring
28	Power Consumption, compressor 3	Compressor performance; system monitoring
29	Power consumption, total test system	System EER
30	Number of on-cycles, compressor 1	Capacity control monitoring
31	Number of on-cycles, compressor 2	Capacity control monitoring
32	Number of on-cycles, compressor 3	Capacity control monitoring

3. TEST PROGRAM

A test program was developed for the testing of the unequal parallel compressor system with microprocessor-based electronic control system. The goals of this program were first defined and a test plan was then developed to meet those goals. A description of the test program is presented in this section.

3.1 Goals of the Test Program

The primary goal of the test program was to prove the technical and economical viability of the unequal, parallel compressor system with microprocessor-based electronic control. To accomplish this, the activities of the test program were concentrated on the following areas:

a. Testing of the unequal parallel compressor combination - General operational data for the three compressor test systems was obtained. Comparison tests were also made with both conventional and microprocessor-based methods to establish the credibility of the proposed system.

b. Optimization of the capacity control algorithm parameters - All input parameters to the capacity control algorithm, such as cut-in and cut-out pressures, cycle-time delays, compressor off-time delay, etc., were determined for optimum operation. Modifications to the parameters were made and then tested.

c. Monitoring of oil flow in the system - A major concern expressed by supermarket industry personnel who were consulted was the potential for compressor damage due to faulty oil flow during system operation. For this reason the oil levels within the compressors were closely monitored and observed during the test program.

3.2 Test Plan

To achieve the test program goals described above, a test plan was organized. The test plan consisted of two major portions which were:

a. The initial system shakedown and testing was devoted to the development and testing of the pressure control algorithm.

b. Comparison testing between the microprocessor and mechanical pressure control of compressor operation.

While the test system is capable of running as either a medium or low temperature system, all of the system testing

performed was at medium temperature operation. The refrigerant used during testing was R-12 and the temperatures of the evaporators of the load model were maintained at approximately 20°F, corresponding to an evaporator pressure of approximately 20 psig.

3.2.1 Initial System Testing

After installation of the refrigeration system was completed, the system was thoroughly tested and adjusted. Particular attention was devoted to the interfacing between the compressor rack and the floating head pressure system. Of importance was the necessary wiring needed to connect the hot gas defrost and heat reclaim capabilities of the two systems. This was accomplished by designing and building a simple control circuit consisting of several relays, pressure switches, and manual on-off switches. Also of concern during this initial system shakedown was the proper adjustment of all control valves, and regulators on the compressor rack and on the load models. The preliminary performance of the system was then evaluated using visual inspection and system performance measurements obtained from the instrumentation.

Next, the microprocessor was installed and programmed. At this time, the unit was thoroughly tested and an effort to optimize the control algorithm was made. The test procedure involved a visual inspection of the operation of the system and measurement of the suction pressure. Finally, the data acquisition system was installed and tested.

3.2.2 Comparison Testing of Microprocessor-Based Electronic Control System and Pressure Control System

In the work performed during the design of the test system, computer analysis of the unequal parallel compressor system revealed that it was superior to present available compressor systems for supermarket operation. It was, therefore, determined that the test program should be structured to determine the optimum way in which such a system should be controlled. The options available for the control of this system were either the use of standard mechanical pressure switches now presently used for refrigeration system control, or a microprocessor-based electronic control system, employing the control algorithm previously described. To determine which type of control yielded the best system performance, a series of comparison tests were performed.

The general procedure for these tests consisted of operating the refrigeration system at a fixed refrigeration load and allowing each control system to operate for a given length of time.

Each control system controlled the compressors for a 24- to 48-hr time period. At the end of this time period the control mode was changed to the alternate system and the test was repeated at approximately the same refrigeration load for another 24- to 48-hr time period. By immediately repeating each test, approximately the same ambient conditions were experienced for both tests. System measurements were taken at regular intervals during the tests and were later used to evaluate the performance of the system.

Tests were performed over a refrigeration load range of 78,000 to 160,000 Btu/hr. This range represents approximately 35 to 90 percent of the design refrigeration capacity of the system. By setting the test refrigeration loads at less than the capacity of the system, the compressor controls were forced to control the system.

The total test refrigeration load was comprised of the display case, the walk-in chest and either one or two of the brine chillers. Both the display case and the walk-in chest were included in most of the tests, so that maximum load fluctuation caused by the operation of these devices would be experienced and also so that both units could be hot gas defrosted. The refrigeration loads of both of these units were estimated from measurements made at the initiation of the test. The remainder of the desired refrigeration load was taken from the brine chillers. The refrigeration load of the brine chillers could be set precisely by controlling the inlet temperature of the brine into the chiller.

The duration of each test was approximately 24- to 48-hr. During this time period, hot gas defrost cycles were performed on the display case and the walk-in chest. Each unit was defrosted once every 24 hr. During the test, system instrumentation measurements were automatically taken at 1-min intervals.

Identical test conditions were used to test both the microprocessor-based electronic control system and the mechanical pressure control system. The system was first tested with the microprocessor controlling. The test was then repeated with the system controlled by the mechanical pressure controls.

Initial test results of the system revealed that the desired evaporator temperature of 20°F could be maintained if the suction pressure at the manifold was maintained at a maximum of 15 psig. This value thus became the desired operating suction pressure for the test system.

After preliminary testing, cut-in and cut-out pressures for the microprocessor control algorithm were determined. These settings are shown in Table 4. To permit the compressors to operate in the manner described, the pressure control setting was set as shown in Table 5.

Table 4. - Pressure settings for the microprocessor-based electronic compressor control

Cut-in pressures (psig)	Cut-out pressures (psig)
CI(0) - 17	CO(0) - 12

Table 5. - Mechanical pressure control settings for the unequal parallel compressors

Compressor	Cut-in pressure (psig)	Cut-out pressure (psig)
20-hp compressor	18	5
10-hp compressor	22	7
5-hp compressor	20	9

For these tests the best mechanical control system sequence was determined to be the following: the 20-hp compressor was used as the base load device that provided most of the refrigeration while the 5- and 10-hp compressors were used alternately to provide the remainder of the refrigeration required. In cases where the refrigeration load was less than the capacity of the 20-hp compressor, the 20-hp compressor ran continually at a reduced suction pressure or, occasionally, would cycle on and off. With the pressure settings shown in Table 5, the following sequence of operation generally occurred. The 20-hp compressor was the first unit to turn on and would operate in a nearly continuous fashion. The 5-hp unit would then turn on if the 20-hp unit could not maintain the suction pressure below 20 psig. The 5-hp unit would continue to operate until a suction pressure of 9 psig was attained at which point this unit would cut out. The 10-hp unit starts operation when the suction pressure is above 22 psig and continues to operate until the suction pressure drops below 7 psig. The operation of the 5- and 10-hp compressors have been overlapped so that the combination of the 5- and 20-hp compressors is first tried to meet the load requirements. If the capacity of these two units proves to be inadequate, the suction

pressure will rise until the 10-hp compressor cuts in. The 5-, 10-, and 20-hp compressors are then run simultaneously until the suction pressure either stabilizes, signalling that all compressors are needed to meet the load, or drops, causing the 5-hp compressor to cut out first. The combination of the 20- and 10-hp compressors are then used to meet the refrigeration load.

The test procedure was repeated for each of the refrigeration loads tested. Three refrigeration loads in the 78,000 to 160,000 Btu/hr range were tested in the fashion described.

3.3 Data Reduction

Complete characterization of the operation of the test system includes information on the following parameters:

a. Refrigeration loads

b. Compressor and total system power consumption

c. Temperatures and pressures at various state points in the system

d. The number and sequence of compressors operating and the corresponding suction pressure.

To provide this necessary information, the test system was thoroughly instrumented as was described in the previous section. A total of 32 measurements, as shown in Table 3, have been provided for this purpose. The system instrumentation is electronically attached to the microprocessor for purpose of data acquisition. The system data is gathered and recorded on a cassette tape at regular intervals of 1 min during testing.

Because of the use of cassette tapes and because of the large volume of data generated, a data reduction computer program is required. The functions of this program are:

a. To read the cassette tape and prepare data arrays suitable for reduction

b. To convert the raw measurements into system temperatures, pressures, flow rates, etc.

c. To determine the refrigeration loads

d. To determine the power and energy consumption of the compressors and the refrigeration system

e. To provide time related profiles of compressor operation and corresponding suction pressure.

The last function mentioned is accomplished by generating a digital signal whenever a compressor is turned on. This digital signal is recorded as a number one on the data tape. A compressor not operating is recorded as a number zero. The digital signals are recorded at regular intervals along with other system measurements. The data reduction program reads the digital input signals and interprets them, and then indicates in the data reduction output the status of each compressor (on or off) at each measurement interval.

Data generated by the data reduction program are in the following forms:

a. Instantaneous performance and status measurements of the refrigeration system

b. Averaged performance measurements at 1-hr intervals including total refrigeration supplied, total energy consumed and average specific refrigeration for the time interval

c. Cumulative performance of the system over the entire test, again showing total refrigeration supplied, total energy consumed, and the energy efficiency ratio

d. A profile of all compressor combinations used during the test and the corresponding suction pressure. These data are provided at the 1-min intervals at which they were recorded.

3.4 Concepts and Operating Conditions Not Addressed in the Test Program

In the initial planning for this test program, several other important concepts and system operating conditions were to be included in this test program. Because of initial problems in the operation of the refrigeration system and associated problems with the development of the microprocessor-based electronic control system and data acquisition system, the time allotted for testing was reduced. Also, because of these delays, the testing was performed for late spring and summer months rather than winter months which greatly changed the ambient conditions under which the test system was operated. For these reasons the floating head pressure system was never employed in the testing and tests were not performed with the heat reclaim in operation.

The floating head pressure system is designed to allow the refrigeration system to operate at the minimum head pressure allowable at any given time. In contrast, a conventional refrigeration system has means to artificially maintain the head pressure at a fixed minimum pressure, usually between 70 and 100 psig

for operation with R-12, regardless of ambient conditions. The major difference between the two systems is, therefore, most apparent during winter months operation when the head pressure must be artificially maintained in conventional systems.

For similar reasons, the refrigeration system operation with heat reclaim was not tested during the system test program. Heat reclaim is used during winter operation under winter ambient conditions. Since testing was not performed during the winter months, proper ambient conditions needed for the evaluation of heat reclaim performance were not available.

4. DATA AND TEST RESULTS

Presented in this section are the results of the tests performed on the refrigeration test system. A description of the test procedure was provided in the previous section which outlined the test program. Tests were performed to optimize the control algorithm parameters and compare the microprocessor-based electronic control system to the standard mechanical pressure control system of the refrigeration system. Observations concerning the operation of the system are also presented in this section.

4.1 Control Algorithm Optimization

The initial efforts of the test program were focused on the testing and optimization of the control algorithm used by the microprocessor-based electronic control system. In summary, the microprocessor continually monitors the suction pressure of the system for the purpose of compressor control. After a certain time period, a change in the operating sequence of the compressors is made if the suction pressure is not within a desired pressure bandwidth. The amount of change in compressor capacity level is determined by the amount of deviation in the suction pressure from the desired value.

The parameters of the control algorithm that were examined experimentally were:

a. The cut-in and cut-out pressures

b. The pressure monitoring time

c. The compressor time delay

d. The maximum number of compressor state changes allowed.

Also observation of the general operating characteristics of the system while being controlled by the microprocessor were made.

The appropriate cut-in and cut-out pressures for the control algorithm were determined by trial and error. The general procedure was to set the control pressures at certain values and then observe the operation of the system. It was found that the refrigeration system maintained all evaporators at the correct temperature and pressure when the suction pressure was 15 psig. It was also determined that the microprocessor control could maintain a pressure control band of 2 to 5 psig with minimum changes in compressor operating states. To maintain correct evaporator temperature and pressure, the control band was biased toward

pressures below the 15 psig value. The values for CI(0) and CO(0) were therefore set at 17 and 12 psig, respectively.

The suction pressure monitoring time of the microprocessor was initially set at 30 sec. The length of time used for pressure monitoring was discussed to be not important. In general, a time monitoring period between 15 and 30 sec was adequate for proper system operation.

The control algorithm is capable of delaying the starting of compressors for a period of 2 min. The purpose of the delay is to prevent short cycling of the compressors and the accompanying compressor lubrication problems which can occur. Observation of the test system revealed that off-time of nonoperating compressors was generally long enough to prevent short cycling. This length of time was determined by the amount of time used for suction pressure monitoring. For this reason no additional time delay of compressor sequencing is required for proper system operation.

The control algorithm has been designed to consider the effect of hot gas defrost on the operation of the compressors. In the algorithm, the compressor state changes are limited to a minimum state of three units, or 15 hp in this case. The compressor state is not allowed to drop below this value. In actual operation this minimum setting was not always found to be satisfactory.

During testing, it was noted that the amount of refrigerant charge was extremely important in the operation of the hot gas defrost. While the system is in hot gas defrost, the accompanying drop in head pressure causes inadequate liquid refrigerant flow from the condenser. Excess liquid refrigerant must be available in the system receiver to ensure that adequate refrigeration is maintained during defrost. Without this excess, the system virtually stops supplying refrigeration, and the suction pressure drops drastically. With conventional pressure controls, the refrigeration compressors would shut down in such a case. With the microprocessor-based electronic control system algorithm, the compressors are not allowed to shut down under any circumstances during hot gas defrost. If the refrigerant charge is not adequate, the system compressors are forced to operate at extremely low suction pressures, a very undesirable condition. Further development work is required on this portion of the algorithm. As a minimum, the algorithm should be changed such that the compressors are allowed to shut down if the suction pressure drops too low.

4.2 Observation and Monitoring of Compressor Oil Flow

A major concern had been expressed by industry about the potential for compressor lubrication problems in the multiple unequal parallel compressor system. It was thought that it was possible that such a system could have poor oil flow characteristics, resulting in one or more of the compressors being depleted of lubricating oil. A major effort was therefore made in the test program to carefully monitor the oil levels in the compressors and make observations of the operation of the experimental refrigeration systems' lubrication system.

It was discovered during the initial operation of the system that the oil levels in the compressors did drop considerably. By consulting with Friedrich engineers, it was found that this was not an unusual occurrence. Basically, it was necessary for oil to be spread throughout the refrigeration system before an equilibrium could be reached in the amount of oil contained in the compressors. The problem was resolved by adding oil to the compressors and by filling the oil reservoir in the lubrication system. The oil levels in the compressors did not vary after the oil addition.

An oil distribution problem also developed, but it was found that it was caused by a problem in the construction of the suction manifold. Oil returning from the evaporators tended to flow to the 5 hp compressor, making the oil level in this compressor abnormally high compared to the two remaining compressors. The problem may be due to plugged oil return holes in the inlet pipes of the 10 and 20 hp compressors. Unfortunately, this problem could not be solved without extensive rebuilding of the compressor rack. It was discovered that this condition could be alleviated by periodically draining the oil from the 5 hp compressor and reestablishing the correct oil level.

During operation of the system, either with the microprocessor-based electronic control system or with the mechanical pressure control system compressor lubrication problems were not experienced. Since the oil levels were properly maintained, it can be assumed that the lubrication system, including the oil separator, oil level switches, etc., functioned correctly during system operation.

4.3 Control Systems Comparison Tests

A series of tests were executed with the experimental refrigeration system to establish the viability of using the microprocessor-based electronic control system. In this set of tests the multiple unequal parallel compressor system was alternately operated by the microprocessor-based electronic

control system and by the standard mechanical pressure control system. In both cases the refrigeration loads addressed by each control system were matched as closely as possible. The details and procedure followed for these tests were presented in the previous section. All of the tests were conducted with the refrigeration system operating in the medium temperature range. The evaporator temperatures of the load models were maintained at approximately 20°F. The refrigerant used was R-12.

The results of the control systems comparison tests are presented in Table 6. In these tests, the experimental refrigeration system was operated at three refrigeration load levels, and the system was alternately controlled by the microprocessor-based electronic control system and the mechanical pressure control system. Presented in this table is the following information for each test case:

a. The average refrigeration load experienced by the system

b. The average power consumption of the system, considering individually the power consumption of the compressors and of the total system

c. The EER of the system for both the compressor power only and total system power cases.

Presented also is a brief description of the operating conditions during testing including:

a. Ambient temperature range

b. Condensing pressure range

c. Average suction pressure.

The results presented in this table clearly show that the unequal parallel compressor system using the microprocessor-based electronic control system is the superior system. The increase in EER for the microprocessor-based electronic control system as compared to the mechanical pressure control system ranged from 9.8 to 12.5 percent in the compressor power only case and from 5.9 to 9.1 percent for the total system power case.

The reason for this improvement in performance can be explained by examining the operating characteristics of the two systems. Presented in Table 7 is a summary of the frequency of operation of compressor states for each of the tests conducted. The numbers shown in this table give the percentage of compressor operating states occurring compared to the total number of operating conditions observed. For example, for the case of Run No. 003, 37 percent of the time a total of 25 hp of compressor

TABLE 6. Results of the comparison test between microprocessor-based electronic control and mechanical pressure control of the experimental refrigeration system

Run No.	Control type	Average refrigeration supplied (Btu/hr)	Average power consumed (kW)		Energy efficiency ratio (Btu/hr/W)		Percent improvement in energy efficiency ratio (%)		Ambient temperature range (°F)		Condensing pressure range (psig)		Average suction pressure (psig)
			Compressor	Total system	Compressor	Total system	Compressor	Total system	High	Low	High	Low	
007	Microprocessor	78,400	11.6	14.6	6.8	5.4	11.5	5.9	77	66	89	75	14.7
012	Mechanical pressure	82,400	13.4	16.2	6.1	5.1			75	70	90	84	13.7
003	Microprocessor	106,500	14.7	17.7	7.2	6.0	12.5	9.1	74	65	86	80	14.9
008	Mechanical pressure	120,800	18.9	21.8	6.4	5.5			75	69	91	87	14.0
005	Microprocessor	160,500	28.6	31.4	5.6	5.1	9.8	8.5	79	69	123	107	15.4
010	Mechanical pressure	155,000	30.4	33.0	5.1	4.7			78	68	124	110	14.8

Average evaporator pressure - 20 psig
Refrigerant - R-12

TABLE 7. - Frequency of occurrence of a given compressor operating state

Run No.	Control type	Compressor operating states (percentage of total operating time)							Average refrigeration load (Btu/hr)	Energy efficiency ratio (Btu/hr/W)	
		5 hp	10 hp	15 hp	20 hp	25 hp	30 hp	35 hp		Compressor	Total system
007	Microprocessor	3	52	45	-	-	-	-	78,400	6.8	5.4
012	Mechanical pressure	-	-	-	94	6	-	-	82,400	6.1	5.1
003	Microprocessor	-	9	19	35	37	-	-	106,500	7.2	6.0
008	Mechanical pressure	-	-	-	-	100	-	-	120,800	6.4	5.5
005	Microprocessor	-	-	-	-	1	34	65	160,500	5.6	5.1
010	Mechanical pressure	-	-	-	-	-	3	97	155,000	5.1	4.7

capacity was utilized; 35 percent of the time 20 hp was utilized; 19 percent of the time 15 hp was utilized, and 9 percent of the time 10 hp was utilized. A similar compilation and distribution is presented for all of the tests described in Table 6.

Several points should be noted about the data presented in Table 6. At the lower and middle refrigeration load levels, the refrigeration system control by the microprocessor achieved an EER of the order 7.0 while at the high refrigeration load level the EER of this same system dropped to 5.6. This can be explained by examining the compressor capacity distribution in Table 7. At the high refrigeration load the refrigeration system operated at the maximum capacity of 35 hp for approximately 65 percent of the time. It should also be noted that the mechanical pressure control system operated at 35 hp for 97 percent of the time and achieved an EER of 5.1. This would suggest that a limiting value of EER of approximately 5.0 exists and would occur for either system if all compressors were operating continuously.

At the three refrigeration load levels, Run Nos. 008, 010, and 012, a general shift of compressor capacity states can be noted for the mechanical pressure control system. This system, therefore, did respond to the changes in refrigeration load, but, in all three cases, tended to operate at one particular compressor operating state. In comparison, the refrigeration system with microprocessor-based electronic control system operated over two or more capacity states, indicating that this system was alternating to match the refrigeration capacity with refrigeration load in a more efficient manner. By shifting to a lower compressor state, less energy is being consumed, thus increasing the EER of the refrigeration system.

The suction pressures for a 4 hr time period for the experimental refrigeration system with the microprocessor-based electronic control system and with the mechanical pressure control system are presented for Run Nos. 005 and 010 in Figures 18 and 19, respectively. The primary difference between the two control systems is the average suction pressure over the time period examined. For Run No. 005 the average suction pressure was 15.4 psig, while for Run No. 010 the average suction pressure was 14.8 psig. The higher suction pressure value maintained by the microprocessor-based electronic control system would indicate a better match between the refrigeration capacity of the compressors and the refrigeration load.

4.4 Estimates of Annual Energy Savings

Experimental determination of energy savings that can be expected by the implementation of the unequal parallel compressor system was not performed in this phase of the program. The actual

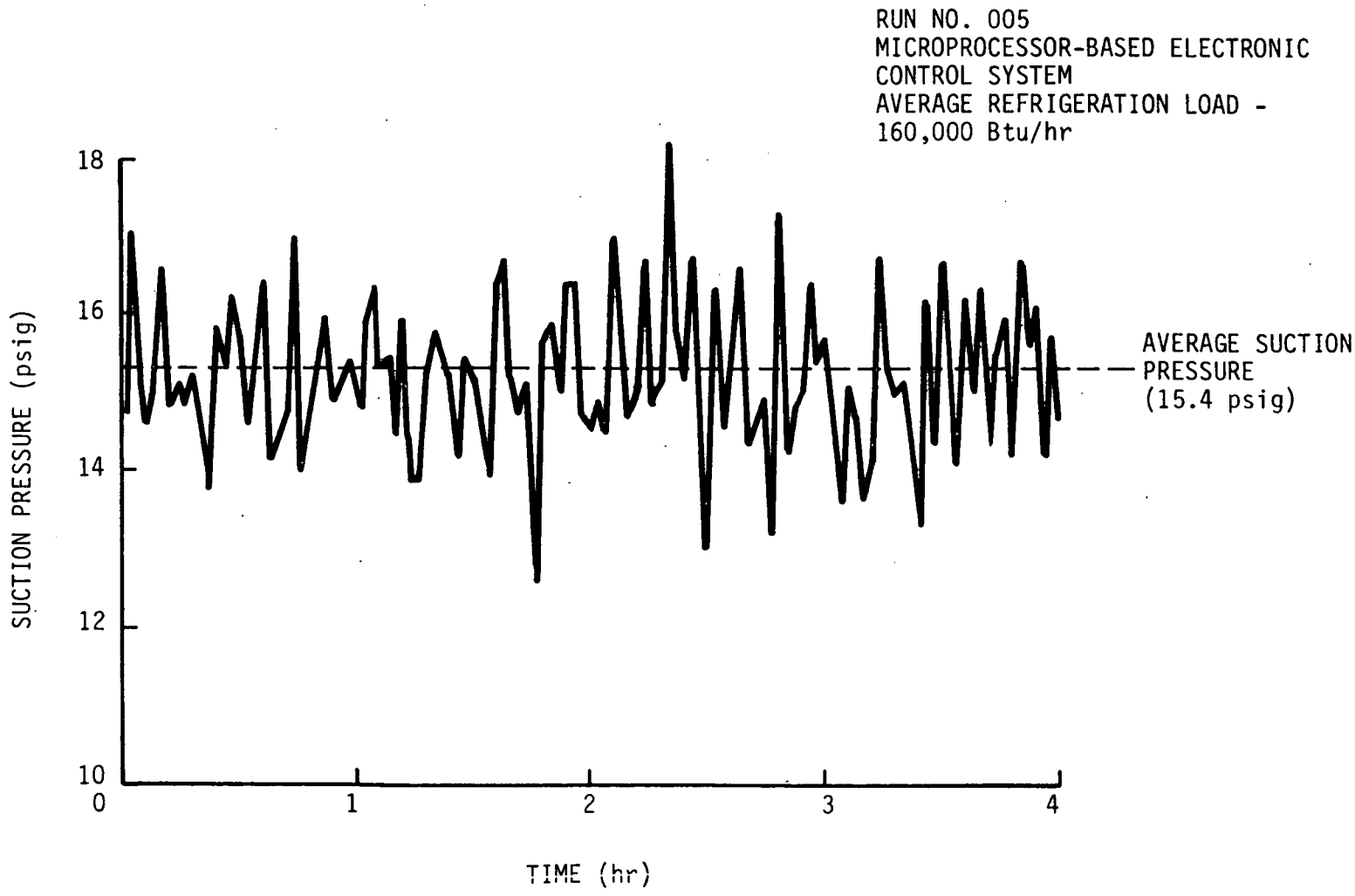

FIGURE 18. - Suction pressure history of the unequal parallel compressor system with the microprocessor-based electronic control system.

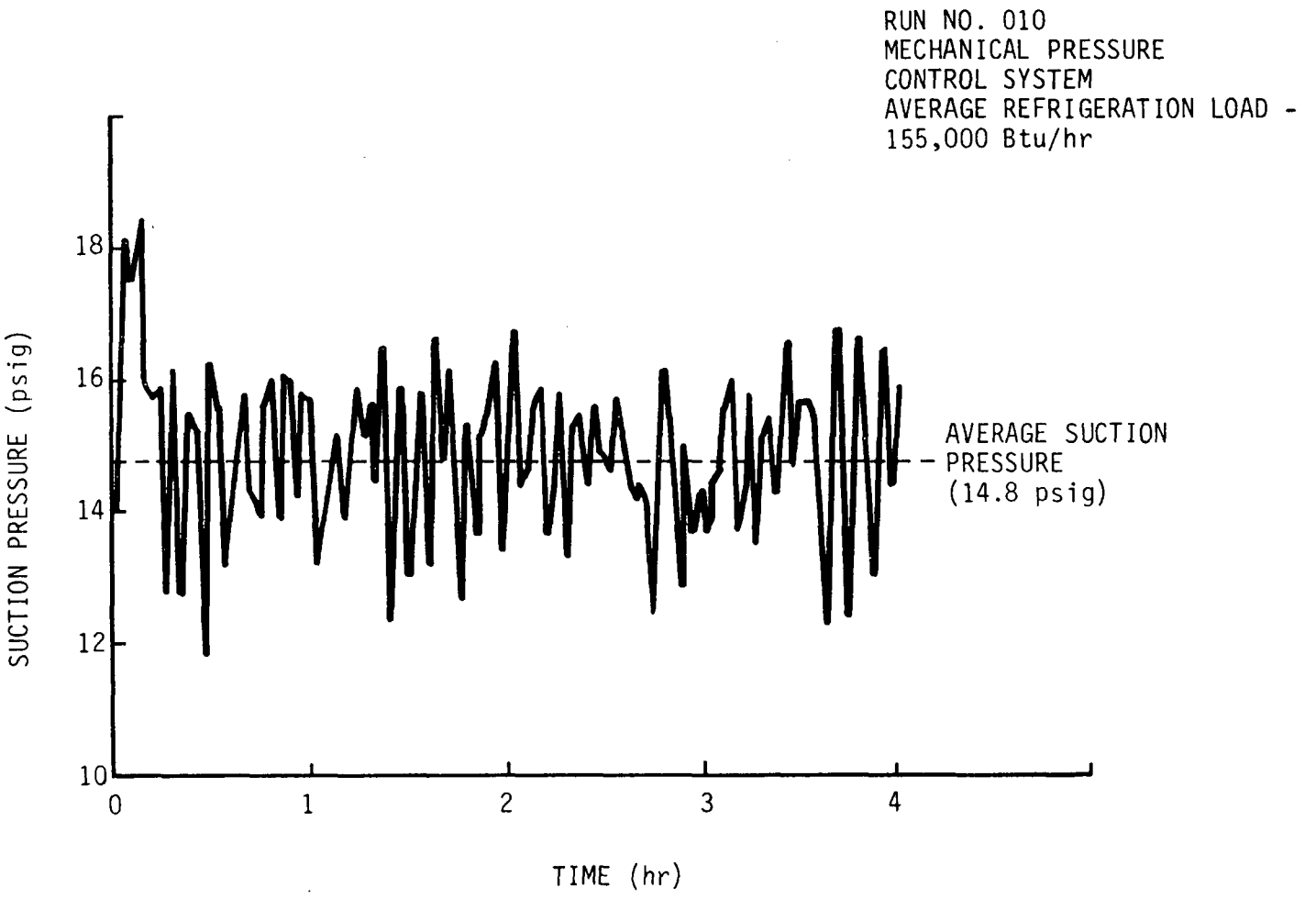

FIGURE 19. - Suction pressure history of the unequal parallel compressor system with the mechanical pressure control system.

energy savings can only be determined by comparison of the two refrigeration systems - one being an unequal parallel compressor system, the other a conventional system. The comparison can be accomplished by having the two systems operating simultanecusly at the same refrigeration loads. Such an arrangement obvicusly is not practical or cost-effective for the present research program.

An alternative method to estimate an annual energy savings would be to employ the computer model developed in this program. This model can provide a reasonable estimate of system performance over the long term, that is, on the order of 6 months to 1 year. For this type of comparison the performance data collected on the experimental system would be compared to the expected performance of a conventional system as predicted by the computer model.

This type of comparison was not done in this program primarily because of lack of time needed to gather long-term operating data. Also, the computer program has not been fully validated. Complete model validation would require some long-term system operating data.

The computer model has been used previously to estimate the performance of the unequal parallel compressor system with microprocessor control in comparison with a conventional refrigeration system with three equal compressors of a total combined capacity of 35 hp. For medium temperature refrigeration using R-12, it was found that the unequal parallel system used 29,100 kWhr less per year than the conventional equal parallel system. This represents an energy savings of approximately 26 percent.

5. RECOMMENDATIONS AND CONCLUSIONS

5.1 Conclusions

An experimental refrigeration system was constructed for the purpose of evaluating and demonstrating several novel techniques to save energy in supermarket refrigeration systems. The techniques examined included a multiple compressor rack that utilized three compressors of unequal capacity. A microprocessor-based electronic control system designed to control the three compressors was constructed and installed in the experimental refrigeration system.

Comparison tests were made in which the refrigeration system was operated and alternately controlled by the microprocessor-based electronic control system and by the standard mechanical pressure control system. Refrigeration loads were comparable for all comparison tests. The range of refrigeration load was varied between 78,000 and 160,000 Btu/hr. The results of the comparison test showed that the refrigeration system with the microprocessor-based electronic control system was able to meet the required refrigeration load while using less energy than the mechanical pressure control system. The compressor EER of the microprocessor-based electronic control system was 9.8 to 12.5 percent higher than that of the mechanical pressure control system.

General observation of the system showed that the unequal parallel compressor system did not experience unusual operating problems during testing. Special attention was given to monitoring the compressor lubrication system which performed well.

Observation of the operation of the test system during hot gas defrost showed that there was a flaw in the microprocessor algorithm. As it was originally written, the pressure control maintained a minimum compressor operating state during hot gas defrost regardless of the system conditions. This control feature was found not to work if an excess of refrigerant was not available in the system receiver. For this case, the compressors continued to operate at extremely low suction pressure which sometimes dropped below atmospheric pressure. The problem could be corrected by eliminating this portion of the algorithm and allowing the microprocessor to control the system according to operating conditions only.

The floating head pressure system was not tested or evaluated during this phase of the program because of schedule problems and unfavorable ambient conditions. The primary advantages of such a system would be derived during the winter months when ambient temperatures are low. The actual system testing did not

occur until the late spring and early summer months of this year. Ambient temperatures at that time were too high for proper evaluation of this system.

It was not possible experimentally to estimate energy savings of the unequal parallel compressor system with microprocessor control in comparison to a conventional system. Such a comparison can only be performed by operating the two dissimilar systems simultaneously. While this was not done in the laboratory, it is possible to obtain the comparison in an actual supermarket. However, computer modeling results of the proposed system have shown that the annual energy savings of the order of 26 percent can be expected.

5.2 Recommendations

The test performance of the unequal parallel compressor system with microprocessor-based electronic control showed that such a system is technically feasible and that substantial energy savings could be obtained from such a system when used for supermarket refrigeration. It can be concluded from the laboratory testing results that this system is ready for implementation in an actual supermarket environment. For this reason, the next phase of this program should contain an engineering evaluation of several systems placed in supermarkets in various geographic locations.

It is also recommended that further testing be done on the present test system to achieve the following goals:

a. Evaluation of the floating head pressure system - This system should be tested thoroughly over a complete range of ambient conditions.

b. Integration of the floating head pressure system with the unequal parallel compressor system - Analysis has suggested that maximum energy savings can be achieved by operation of the unequal parallel compressor system with the floating head pressure system. Thorough testing and evaluation of such a system should be undertaken.

c. Testing of the system with R-502 refrigerant - To data only R-12 has been used as a refrigerant and only medium temperature refrigeration has been attempted with the experimental refrigeration system. The unequal parallel compressor system should also be tested for use in low temperature applications where R-502 is used as the refrigerant.

d. Testing of the system during heat reclaim operation - The use of heat reclaim has a considerable effect on the operation of a refrigeration system. Testing of the system during heat reclaim operation should be performed.

Several other areas of refrigeration system operation should also be examined during later phases of this program. They include:

a. Expansion of the control functions of the microprocessor - The control functions of the microprocessor could be expanded to other areas of the refrigeration system. Such functions as high pressure cutout, compressor oil pressure control, head pressure control, and system alarms could be easily implemented with a microprocessor-based electronic control system. By increasing the control functions of the microprocessor, the cost-effectiveness of this unit can be greatly enhanced.

b. Evaluation of thermal expansion valves - One of the key components of the refrigeration system is the thermal expansion valve. Yet, little is understood of its operation and virtually nothing has been done to improve it in the recent past. The development of better thermal expansion valves could conceivably save large amounts of energy in commercial refrigeration.

APPENDIX A

DATA REDUCTION PROGRAM AND SAMPLE RUN

A.1 Elements of the Data Reduction Program

Table A-1 contains a listing of the elements of the data reduction program and describes their functions.

A.2 Flow Chart

The flow chart for the main program of the data reduction program is shown in Figure A-1. The data is read from cassette tape with one block of data read each time. Each data block contains two sets of readings at 1-min intervals. The data is then used in the data reduction equations. After each block is processed the count, NCOUNT, is checked against NPRINT. If they are equal the reduced data is then printed. The program then returns to the beginning to process the next block of data until the data is depleted.

A.3 Sample Output

The output of the data reduction program is described in Table A-2. A sample output is shown in Figure A-2.

TABLE A-1. Elements of the data reduction program.

Name	Type	Function
REDUCE	Main Program	Provides I/O Interfaces subroutines Contains all data reduction equations
ADPIO	Subroutine	Controls cassette recorder Reads cassette tapes
ERRMES	Subroutine	Evaluates errors in cassette tape I/O
TABLES	Subroutine	Refrigerant Properties
VAPOR	Subroutine	Refrigerant Properties
SATPRP	Subroutine	Refrigerant Properties
CPLL	Function	Refrigerant Properties
TSAT	Function	Refrigerant Properties
TEMP	Function	Convert thermocouple readings to temperatures

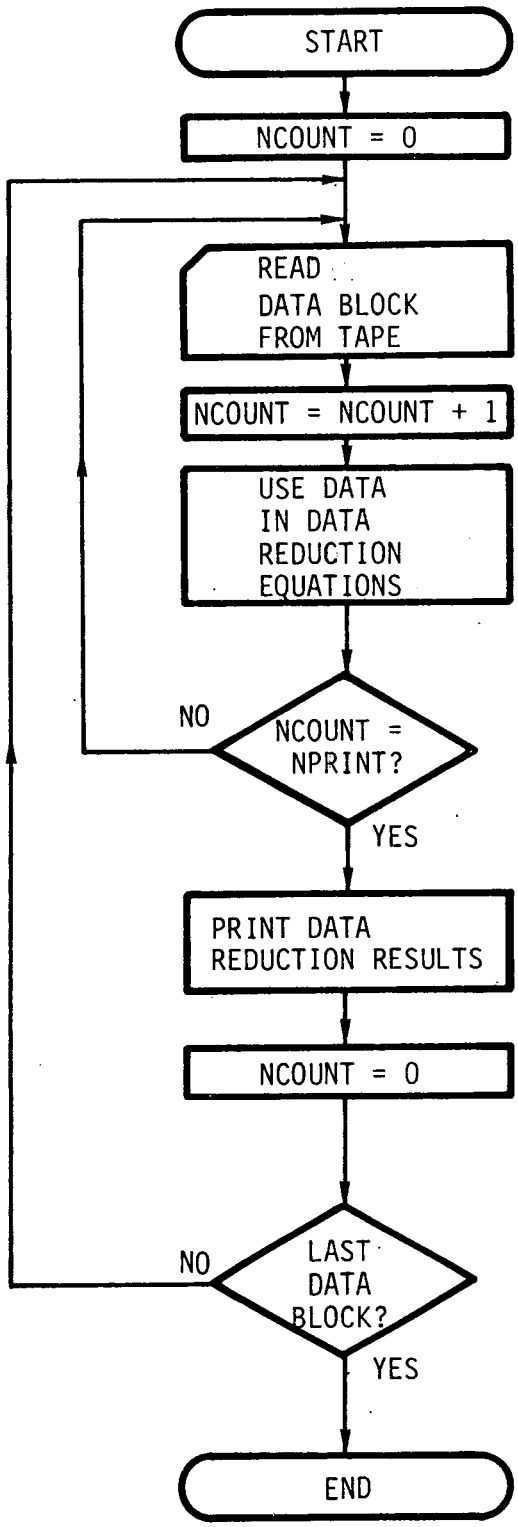

FIGURE A-1. Flow chart of a data reduction program.

TABLE A-2. Output of the data reduction program.

Output Item	Description
TIME	Time at which data reading occurred
REFRIGERATION LOADS	Expressed in Btu/hr
BRINE 1	Refrigeration load of Brine Chiller No. 1
BRINE 2	Refrigeration load of Brine Chiller No. 2
WALKIN	Refrigeration load of the Walk-in Chest
DISPLAY	Refrigeration load of the Display Case
REFRIC SUPPLIED	Cumulative refrigeration supplied (Btu)
POWER INPUT	Express in kilowatts
5 hp	Power consumed by 5 hp compressor
10 hp	Power consumed by 10 hp compressor
20 hp	Power consumed by 20 hp compressor
TOT	Power consumed by refrigeration system
ENERGY CONSUMED	Expressed in kilowatt-hours
5 hp	Total energy consumed by 5 hp compressor in time interval
10 hp	Total energy consumed by 10 hp compressor in time interval
20 hp	Total energy consumed by 20 hp compressor in time interval
TOT	Total energy consumed by system in time interval
LRES PRES	Pressure at the liquid header
SUCT TEMP	Temperature at the suction header
SUCT PRES	Pressure at the suction header
DELT1	Temperature difference of brine in Brine Chiller No. 1
DELT2	Temperature difference of brine in Brine Chiller No. 2
Q1	Flow rate of brine in Brine Chiller No. 1 (gal/min)
Q2	Flow rate of brine in Brine Chiller No. 2 (gal/min)

TABLE A-2. Output of the data reduction program (continued).

Output Item	Description
P3OUT	Outlet pressure at the walk-in chest
P4OUT	Outlet pressure at the display case
XMWI	Refrigerant flow rate to walk-in chest (lb/hr)
XMDC	Refrigerant flow rate to display case (lb/hr)
T3OUT	Outlet temperature of walk-in chest
T4OUT	Outlet temperature of display case
H3IW, H3OUT, H4IN, H4OUT	Inlet and outlet enthalpies of walk-in chest and display case
COMM ENERGY	Expressed in kilowatt-hours
COMP	Total energy consumed by the compressors
TOTAL	Total energy consumed by the refrigeration system
EERI	Instantaneous energy efficiency ratio of the compressors
EERIT	Instantaneous energy efficiency ratio of the refrigeration system
AVG EER	Energy efficiency ratio of the compressors for the time interval
AVG EERT	Energy efficiency ratio of the refrigeration system for the time interval
CUM EER	Cumulative energy efficiency ratio of the compressors
CUM EERT	Cumulative energy efficiency ratio of the refrigeration system
AMB TEMP	Outside ambient temperature
IN AMB TEMP	Inside ambient temperature
COND PRES	Condenser pressure
COND IN TEMP	Inlet temperature at the condenser
COND OUT TEMP	Outlet temperature at the condenser
SUBCOOL TEMP	Outlet temperature at the subcooler
LREF TEMP	Temperature at the liquid header
COMPRESSOR OPERATION	Operating status of compressors at 1-minute intervals
SUCTION PRESSURE HISTORY	Pressure at the suction header at 1-minute intervals

```
      TIME                          REFRIGERATION LOAD                          REFRIG SUPPLIED          POWER INPUT
                                        (BTU/HR)                                   (BTU)                    (KW)
                          BRINE1        BRINE2        WALKIN        DISPLAY                    5 HP    10 HP   20 HP   TOT
  9:20: 0   0/16/ 4   0.0000E+00    0.8620E+05    0.1156E+05    0.3286E+04   0.9585E+06     4.92    9.17    0.00   17.09
     ENERGY CONSUMED                     CUMM ENERGY
          (KW-HR)                           (KW-HR)                            AVG     AVG     CUM     CUM
  5 HP   10 HP   20 HP    TOT        COMP          TOTAL      EERI    EERIT    EER     EERT    EER     EERT
  2.89    3.90    7.48   17.17    0.1322E+03    0.1590E+03   7.17    5.91    7.61    6.32    7.25    6.03
   REFRIGERATION SUPPLIED IN THIS TIME  0.1085E+06
   AMB     IN AMB     COND      COND      COND    SUBCOOL    LREF      LREF      SUCT      SUCT
  TEMP      TEMP      PRES    IN TEMP  OUT TEMP    TEMP      TEMP      PRES      TEMP      PRES
  65.77     73.63     76.51   132.78    68.40     68.83     68.40     79.28     51.18     16.87
   DELT1     DELT2      Q1      Q2      P3OUT     P4OUT      XMWI      XMDC      T3OUT     T4OUT
  -9.63     11.71    0.00   17.62     19.24     24.87    198.45     54.77     36.32     49.84
 T3OUT,T4OUT     36.32   49.84
VF,H3IN,H3OUT,H4IN,H4OUT      0.01      23.68     81.95     23.68     83.67
   COMPRESSOR OPERATION
   (5 HP,10 HP,20 HP)---1=ON 0=OFF
 110   101   101   001   110   010   101   001   001   101
 010   001   001   110   101   001   101   010   110   001
 101   110   010   110   001   101   001   001   101   110
 001   110   110   001   101   110   110   001   001   001
 101   001   001   110   110   110   101   101   001   110
 110   101   010   110   101   001   101   110   110   110
SUCTION PRESSURE HISTORY
  15.88    15.15    11.58    14.46    14.72    19.41    14.98    14.68    15.49    12.35
  19.45    15.45    15.02    14.25    14.07    15.62    12.35    19.41    15.11    16.83
  14.33    14.12    19.88    16.66    16.01    13.94    14.07    16.23    14.68    16.83
  15.02    14.46    16.18    15.15    11.45    14.85    15.88    15.88    14.55    16.14
  13.08    13.82    14.33    14.63    14.42    15.02    15.11    14.59    14.20    14.20
  15.28    14.85    18.46    16.96    12.70    15.11    13.86    14.85    15.36    16.87
```

FIGURE A-2. Sample printout of data reduction program.

HIGHLY ENERGY-EFFICIENT

SUPERMARKET SYSTEMS

Task 3 Report

ENGINEERING EVALUATION TEST PLAN

TABLE OF CONTENTS

Engineering Evaluation Test Plan

Section		Page
1.	INTRODUCTION AND SUMMARY	5-1
1.1	Introduction	5-1
1.2	Engineering Evaluation Test Site Selection	5-2
1.3	Phase III - Program Plan	5-3
2.	SUPERMARKET INDUSTRY PARTICIPATION	5-4
3.	ENGINEERING EVALUATION TEST SITE SELECTION	5-9
3.1	Evaluation Criteria	5-9
3.2	Major Cities Considered for Engineering Evaluation Testing	5-9
3.3	Engineering Evaluation Test Site Selection Method	5-11
4.	PHASE III PROGRAM PLAN	5-22
4.1	Introduction	5-22
4.2	Task 5 - Engineering Evaluation	5-23
4.3	Task 6 - Phase III Final Report	5-28
5.	PERSONPOWER ALLOCATION, SCHEDULE, AND COSTS SUMMARY	5-30
5.1	Schedules and Personpower Allocations	5-30
5.2	Total Cost Summary	5-30
6.	REFERENCES	5-35

LIST OF ILLUSTRATIONS

Figure		Page
1	Supermarket chain company solicitation letter	5-6
2	Major regions of the United States	5-13
3	Schedule for Task 5 - Engineering Evaluation	5-31
4	Schedule for Task 6 - Phase III Final Report	5-32

LIST OF TABLES

Table		Page
1	Supermarket industry solicitation list	5-5
2	Site selection evaluation criteria and corresponding relative weights	5-10
3	Major subregions of the United States	5-12
4	Major cities considered for engineering evaluation testing	5-14
5	Temperature, food sales, and supermarket density for major cities considered for engineering evaluation testing	5-15
6	Supermarket energy costs	5-17
7	Summary of rating basis for the qualitative criteria	5-18
8	Summary of qualitative data used for engineering evaluation test site, city selection and total score	5-19
9	Ranking of the high-scoring cities considered for engineering evaluation testing	5-20
10	Six recommended cities for engineering evaluation testing	5-21
11	Personpower allocation for Task 5 - Engineering Evaluation	5-33
12	Personpower allocation for Task 6 - Phase III Final Report	5-34

1. INTRODUCTION AND SUMMARY

1.1 Introduction

The supermarket industry presently utilizes 4 percent (88 billion kWhr) of the annual national electric energy consumption (1). Results from the systems analysis performed during Task 1 have indicated that there is a tremendous potential for energy conservation in the supermarket industry. The major area of energy savings is the refrigeration system for display cases which accounts for approximately 40 to 60 percent of the total supermarket energy consumption.

The Supermarket Energy Systems Program, which is divided into three phases, was structured to investigate and develop new efficient supermarket energy systems. The cumulation of Phases I and II efforts has resulted in the laboratory development of an unequal multicompressor parallel refrigeration system with a microprocessor-based electronic control system. Also, a computer program for the analysis of open tub-type display cases has been generated. Preliminary test results indicated that the prototype supermarket refrigeration system with proposed display case design improvements will reduce the supermarket refrigeration energy requirements by 40 percent. This equates to an annual national energy savings of approximately 14 to 21 billion kWhr if the refrigeration system is installed in all existing supermarkets.

However, for the new refrigeration system to be accepted by the supermarket industry, additional testing for performance validation and evaluation must be performed. The total supermarket energy system environment consisting of the HVAC, lighting, display cases, hot water, and refrigeration systems would be very difficult and expensive to simulate in a test laboratory; hence engineering evaluation in a supermarket is a better way to establish credible performance data for the supermarket industry.

In addition to the engineering evaluation, basic research and development of supermarket energy systems are warranted. New areas of research and development include:

a. Continued laboratory system testing

b. Expansion of the microprocessor-based electronic control system

c. Design and development of a Total Energy Management System (TEMS) for supermarkets

d. Research and development of energy-efficient supermarket refrigeration equipment components

e. Continued display case analysis and design

f. Development of an integrated supermarket energy system computer model.

All of these new research and development areas provide energy savings to the supermarket industry and much of the proposed research is generic to other applications such as walk-in coolers, commercial refrigeration systems, refrigerated central warehouses, and refrigerated warehouses.

Because of the engineering and marketing achievements resulting from the Phase I and II efforts, the Phase III work plan has been expanded to include both the

a. Engineering evaluation testing of the prototype supermarket refrigeration system with a microprocessor-based electronic control system

b. Research and development of additional supermarket energy systems.

This task report includes the description of the methodology for supermarket evaluation test site selection, suggested major cities for engineering evaluation testing of the preproduction prototype system, and the Phase III program plan. Each of these items are summarized in the following subsections.

1.2 Engineering Evaluation Test Site Selection

Fourteen major supermarket chains with annual sales greater than $500M were solicited for participation in the engineering evaluation testing. To date five have responded positively, two negatively, and the remaining chains are still deliberating the proposal.

A semi-quantitative method of determining the test site for the engineering evaluation of the unequal multicompressor parallel system with microprocessor-based electronic controls was formulated. The country was divided into nine subregions and major cities were selected from each subregion for preliminary consideration. The evaluation criteria applied to each candidate city included energy cost, average annual ambient temperature, ambient temperature extremes, population and supermarket density, major city within any of the nine subregions of the United States, potential supermarket growth rate, supermarket chain company willingness to participate, graphical location of test site relative to Friedrich or Foster-Miller Associates, Inc. (FMA), institutional factors, and potential energy savings.

Each city was assigned a score for each evaluation criterion and the total score, defined as the sum of the products of the individual evaluation criterion and their respective relative weight, was calculated for each city. The six cities selected are the following:

City	Region
Philadelphia, PA	Northeast
Boston, MA	Northeast
Dallas, TX	South
San Antonio, TX	South
Cleveland, OH	North Central
Los Angeles, CA	West

For Phase III it is recommended that preproduction prototype unequal multicompressor parallel systems be placed in both Boston and San Antonio. If additional funding becomes available, then it is recommended that additional systems be placed in the remaining four cities.

1.3 Phase III - Program Plan

Phase III, Preproduction Prototype System Development, is divided into two tasks with four subtasks:

a. Task 5 - Engineering Evaluation
   - Preproduction Prototype System Design
   - Manufacturing Facility Development/Modification
   - Preproduction Prototype System Testing
   - Deliverables 5D1, 5D2, 5D3, and 5F

b. Task 6 - Phase III Final Report.

The purpose of Task 5 is to perform a comprehensive engineering evaluation of the unequal parallel compressor system. This task includes system design and testing.

The purpose of Task 6 is to document all engineering and marketing efforts performed in Phase III.

2. SUPERMARKET INDUSTRY PARTICIPATION

The methodology for preparing a preliminary list of supermarket companies to participate in the engineering evaluation of the new energy efficient refrigeration system consisted of selecting companies with the following characteristics:

- Supermarket chain
- Annual sales greater than $500M
- Representative chains within the four major geographical regions of the United States.

It was considered important that a supermarket chain (eleven or more large stores) participate rather than an independent since the supermarket chain would have the financial resources for cost sharing, new stores available for system installment during the required scheduled period, and greater interest in accepting new energy efficiency supermarket refrigeration equipment. An annual sales volume greater than $500M was established to assure the financial stability of the participating supermarket chain. And supermarket chains were selected so that all major geographical regions would be considered for climate, population, energy costs and supermarket number growth rates advantages.

Table 1 presents a list of the fourteen supermarket chains initially contacted for field testing participation. Also shown are the annual sales volume and number of stores for each supermarket chain company. The companies with asterisks are the companies which participated in the Program Advisory Committee.

A copy of the soliciation letter sent to the 14 supermarket companies is shown in Figure 1. The response to date has been generally positive.

TABLE 1. - Supermarket industry solicitation list

Name	1980 sales ($ millions) (2)	Number of stores (2)	Response to date
*Safeway Stores, Inc. Oakland, CA	15,103	2,439	Positive
Kroger Company Cincinnati, OH	10,317	1,245	Positive
A&P Montvale, NJ	6,811	1,322	No response to date
Acme Markets (American Stores) Philadelphia, PA	6,260	760	No response to date
Lucky's Stores Dublin, CA	6,469	212	No response to date
Winn Dixie, Inc. Jacksonville, FL	5,389	1,151	No response to date
*Star Market Company (Jewel) Cambridge, MA	4,156	771	Positive
Alberston, Inc. Boise, ID	3,046	384	No response to date
*Stop & Shop Company Boston, MA	2,033	136	Positive
Publix, Inc. Lakeland, FL	1,800	225	Negative
Giant Foods, Inc. Washington, DC	1,460	117	Negative
Ralph's Grocery Company Compton, CA	883	87	No response to date
*H.E. Butt Grocery Co. Corpus Christi, TX	803	150	Positive
Red Owl Stores Hopkins, MN	485	362	Positive

*Members of the Program Advisory Committee.

FOSTER-MILLER ASSOCIATES, INC.
ENGINEERS
350 SECOND AVE.
WALTHAM, MA 02154
617 890-3200/TWX 710-324-1468

Dear Sir:

I am writing to inquire if your company would be interested in participating in a joint business opportunity which would be very beneficial for both your company and the supermarket industry. Your involvement would require making available a supermarket site for the installation and demonstration testing of a new energy-efficient refrigeration system. The details of my proposal are outlined in the following paragraphs.

Foster-Miller Associates, Inc. (FMA), and Friedrich Air Conditioning and Refrigeration Company are presently developing a more energy-efficient refrigeration system for supermarket display cases. The Research and Development Program is funded by the Department of Energy and consists of three phases:

Phase I - System and Market Analysis

Phase II - Prototype System Analysis

Phase III - Preproduction Prototype System Development.

We have completed Phase I and are more than half way through Phase II. As of this date, we have designed, constructed, and are testing a prototype 35-hp refrigeration system comprised of three unequal parallel compressors with a microprocessor-based control system.

For Phase III it is planned to install a preproduction prototype refrigeration system in a supermarket and perform engineering evaluation testing for a time period of approximately 12 to 20 months. It is tentatively proposed that the Department of Energy will pay the following costs:

- Cost premium of the system, that is, the additional cost above the cost for a comparable-size conventional system (system base cost)
- System installation cost
- System monitoring/measurement equipment

FIGURE 1. - Supermarket chain company solicitation letter.

- Control system cost
- Labor costs for data acquisition, data collection, and evaluation
- System maintenance cost.

It is expected that the selected supermarket will pay for the following:

- System base cost
- Electrical energy cost.

The benefits available to the supermarket will include:

- Recurring annual electrical energy savings of approximately $1,300 due to the increased efficiency of the preproduction prototype system (35 hp)
- System cost premium and installation cost will be reimbursed by the Department of Energy
- Complete performance data of the supermarket's (test site) display cases, refrigeration equipment, and HVAC system will be provided
- First supermarket in the United States to employ newly developed energy-efficient supermarket refrigeration system.

The FMA/Friedrich engineering team will custom design the preproduction prototype system so that it will easily accommodate any existing or new supermarket facility. It is anticipated that the system installation date will be between January 1 and April 1, 1982, depending on the availability of the store site and Friedrich's manufacturing schedule.

If you are interested in pursuing further this business opportunity, please send me a letter of interest. If you desire further information, I would entertain any of the following:

- Arrange a demonstration of the prototype system operation at the FMA test laboratories in Waltham, MA
- Send under a separate letter more detailed information of the prototype refrigeration system with microprocessor-based control system

FIGURE 1. - Supermarket chain company solicitation letter (continued).

- Meet with you or other representatives of your company at the annual Food Marketing Institute show in Dallas, TX, May 3-6.

I look forward to hearing from you in the near future.

Sincerely,

FOSTER-MILLER ASSOCIATES, INC.

William M. Toscano

William M. Toscano, Ph.D.
Division Manager
Engineering Systems Group

WMT/can

FIGURE 1. - Supermarket chain company solicitation letter (continued).

3. ENGINEERING EVALUATION TEST SITE SELECTION

A method of determining the test sites for the engineering evaluation of the unequal multicompressor parallel system with microprocessor-based electronic controls was formulated. The purpose is to rank the sites in order of preferability for engineering evaluation testing. This section describes the evaluation criteria, discusses the relative importance of each criterion with respect to each other, presents the scoring of each site for the individual criteria, and summarizes the results.

3.1 Evaluation Criteria

The criteria was divided into three main categories, government, manufacturer, and supermarket, as shown in Table 2. With the goal of selecting suitable engineering evaluation test sites, relative weights were assigned to the criteria on a scale of one to ten. The committee formed to develop the weights consisted of FMA engineers, Friedrich refrigeration and manufacturing engineers, and Friedrich marketing representatives.

Although the criteria were divided into categories such as government, manufacturer, and supermarket, they are all interrelated. For example, while the manufacturer is more concerned about potential supermarket growth rate and geographical location, the supermarket is concerned about energy savings, and the government is concerned about the national energy savings. The relative weights are assigned for the purpose of determining the most advantageous sites for engineering evaluation.

Average annual ambient temperature and ambient temperature extremes, supermarket chain company willingness to participate, and geographical location of the test site scored the highest. The energy cost, institutional factors, and energy savings for the supermarket scored high. Lower scores were assigned to population and supermarket density, potential supermarket growth, and major city within any of the seven subregions. The institutional factors include health and safety codes, building and plumbing codes, and municipal and state laws and regulations. The criteria - population, supermarket density, major city, and potential supermarket growth rate - are marketing penetration related. Thus energy costs, market penetration, supermarket chain company willingness to participate, and service are the primary criteria.

3.2 Major Cities Considered for Engineering Evaluation Testing

To encourage the widest possible acceptance for the new energy-efficient supermarket refrigeration equipment, engineering evaluation should be performed throughout all regions of

TABLE 2. - Site selection evaluation criteria and corresponding relative weights (scale 1 to 10)

	Site selection criteria	Relative weight
Government Criteria	Energy cost	$A_1 = 8$
	Average annual ambient temperature and variation	$A_2 = 10$
Manufacturer Criteria	Population and supermarket density	$A_3 = 6$
	Major city within any of the nine subregions	$A_4 = 4$
	Potential Supermarket growth rate	$A_5 = 6$
	Supermarket chain company willingness to participate	$A_6 = 10$
Supermarket Criteria	Geographical location relative to Friedrich or FMA	$A_7 = 10$
	Institutional factors	$A_8 = 8$
	Energy savings	$A_9 = 8$

the United States. However, this strategy is likely to require more funds than are available for engineering evaluation testing during Phase III. Consequently, a technique for selecting major cities within the United States is developed.

The United States is divided into four major regions, Northeast, South, North Central, and West, and nine subregions, New England, Middle Atlantic, South Atlantic, West South Central, East South Central, East North Central, West North Central, Mountain, and Pacific as defined by the United States Census Bureau. These regions with their respective states are defined in Table 3 and are illustrated in Figure 2.

Twenty-six cities were initially selected to be representative cities for the various major regions and subregions. These cities and their respective geographical locations within the subregions of the United States are shown in Table 4. The initial selection method was based on the following factors:

a. Population

b. Geographical location

c. Supermarket sales

d. Utility rates

e. Average annual ambient temperatures.

3.3 Engineering Evaluation Test Site Selection Method

A semi-quantitative evaluation procedure was developed to evaluate these 26 cities and select 6 cities for engineering evaluation test sites. The quantitative data used in the evaluation process includes supermarket monthly energy costs, the average annual ambient temperature, ambient temperature extremes for winter and summer, food sales, supermarket density, and supermarket growth rates. A summary of the quantitative data used for the test site evaluation is presented in Table 5.

Qualitative factors considered in the evaluation scheme, included in order of importance, are:

a. Supermarket chain willingness to cooperate

b. Geographical location relative to Friedrich or FMA

c. Average annual ambient temperature and variation

d. Energy cost

e. Institutional factors

TABLE 3. - Major subregions of the United States

Regions	States
Northeast	
New England	Maine, New Hampshire, Vermont, Massachusetts, Connecticut, Rhode Island
Middle Atlantic	New Jersey, New York, Pennsylvania
South	
South Atlantic	Delaware, Maryland, Washington, DC, Virginia, West Virginia, North Carolina, South Carolina, Georgia, Florida
East South Central	Kentucky, Tennessee, Alabama, Mississippi
West South Central	Arkansas, Louisiana, Oklahoma, Texas
North Central	
East North Central	Ohio, Indiana, Michigan, Illinois, Wisconsin
West North Central	Minnesota, North Dakota, South Dakota, Iowa, Kansas, Nebraska, Missouri
West	
Mountain	Montana, Wyoming, Idaho, Colorado, Utah, Nevada, Arizona, New Mexico
Pacific	California, Washington, Oregon, Alaska, Hawaii

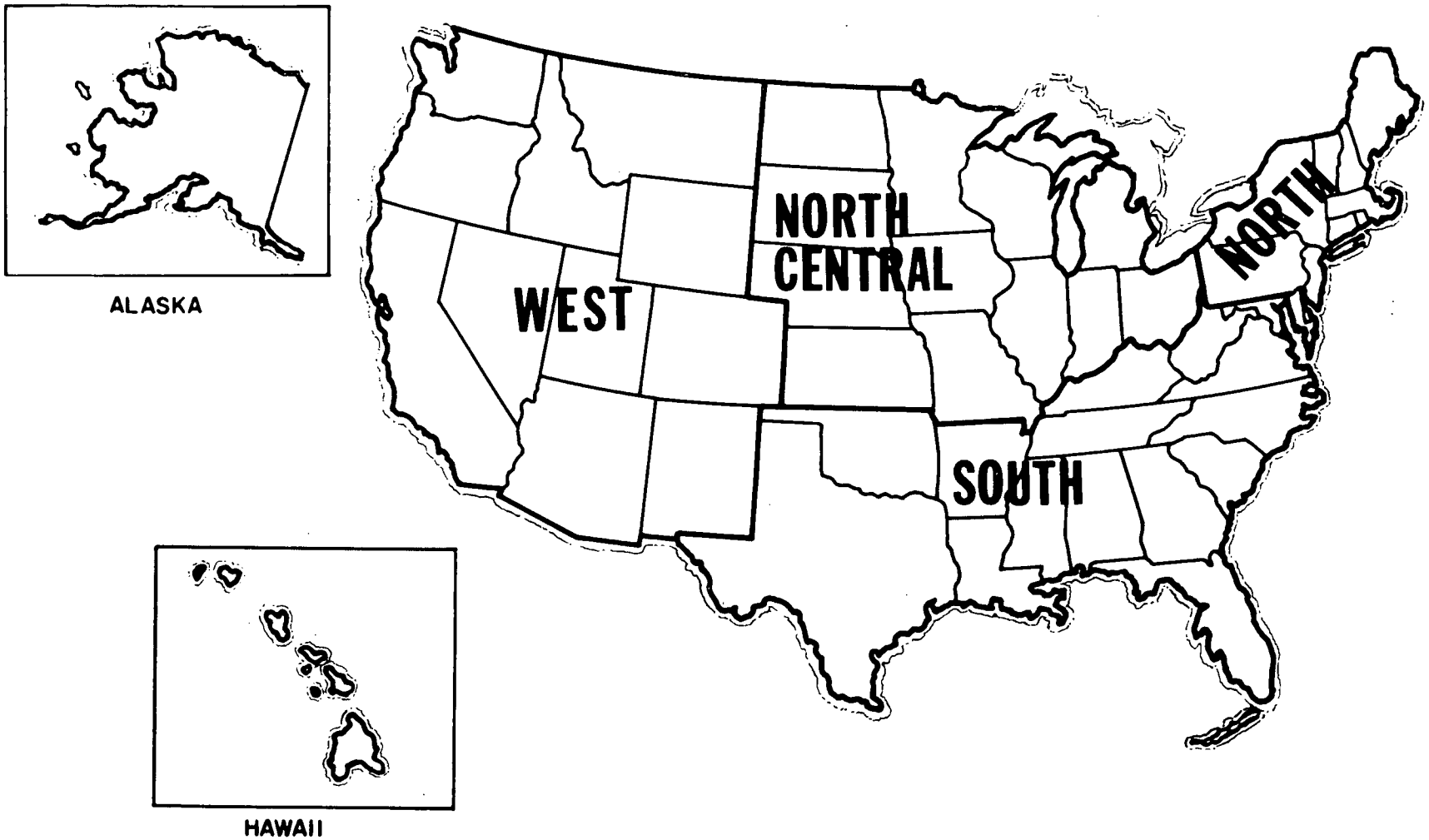

FIGURE 2. - Major regions of the United States.

TABLE 4. - Major cities considered for engineering evaluation testing

Region	Cities Selected
Northeast	
New England	Boston, MA, Hartford, CT
Middle Atlantic	New York, NY, Philadelphia, PA, Pittsburgh, PA
South	
South Atlantic	Washington, DC, Atlanta, GA, Miami, FL, Tampa, FL
East South Central	None
West South Central	New Orleans, LA, Dallas, TX, Houston, TX, San Antonio, TX
North Central	
East North Central	Chicago, IL, Cleveland, OH, Detroit, MI
West North Central	St. Louis, MO, Minneapolis, MN
West	
Mountain	Denver, CO, Phoenix, AZ
Pacific	San Francisco, CA, Los Angeles, CA, Seattle, WA, Santa Ana, CA, San Diego, CA, San Jose, CA

TABLE 5. - Temperature, food sales, and supermarket density for major cities considered for engineering evaluation testing

Regions	Cities	Average Annual Ambient Temperature (°F) (3)	Ambient Temperature Extremes (3)		1980 Food Sales ($M) (2)	Supermarket Density (per 100K people) (2)
			Winter (°F)	Summer (°F)		
Northeast						
New England	Boston, MA	51.4	6	91	3,195	11.5
	Hartford, CT	49.8	1	90	1,012	14.2
Middle Atlantic	New York, NY	54.5	12	93	7,923	12.9
	Philadelphia, PA	53.5	11	93	4,382	14.0
	Pittsburgh, PA	50.3	7	90	2,270	14.0
South						
South Atlantic	Washington, DC	57.0	16	94	3,263	9.2
	Atlanta, GA	61.4	18	95	2,089	17.6
	Miami, FL	75.1	44	92	1,606	14.8
	Tampa, FL	72.2	36	92	1,763	14.8
West South Central	New Orleans, LA	68.6	32	93	1,445	15.9
	Dallas, TX	65.8	19	101	2,782	16.9
	Houston, TX	69.2	29	96	3,326	16.9
	San Antonio, TX	68.8	25	99	1,050	16.9
North Central						
East North Central	Chicago, IL	50.8	-3	94	6,492	14.0
	Cleveland, OH	49.7	2	91	1,989	14.5
	Detroit, MI	49.9	1	93	4,524	13.6
West North Central	St. Louis, MO	55.3	7	96	2,590	18.4
	Minneapolis, MN	43.7	-14	92	1,882	15.9
West						
Mountain	Denver, CO	49.5	-2	92	1,781	12.9
	Phoenix, AZ	69.0	31	108	1,624	17.1
Pacific	San Francisco, CA	56.8	42	80	3,668	14.0
	Los Angeles, CA	64.4	42	94	7,670	14.0
	Santa Ana, CA	65.7	55	85	2,132	14.0
	San Diego, CA	66.2	41	90	1,689	14.0
	San Jose, CA	60.6	46	90	1,412	14.0
	Seattle, WA	51.1	28	81	1,604	20.2

f. Population and supermarket density

g. Potential supermarket growth rate

h. Major city within any of the nine subregions.

Population is an important criteria to consider as it influences the potential supermarket construction market, the number of new sites for the use of the energy-efficient supermarket refrigeration equipment, and the replacement supermarket refrigeration equipment market.

The new energy-efficient supermarket refrigeration equipment should be tested over a broad range of temperatures so that its performance and life cycle cost savings can be predicted for operation at different geographical locations in the United States. For example, it would be undesirable to test the refrigeration equipment in Honolulu where the maximum temperature range is only 27°F, whereas in Minneapolis the maximum temperature range is 106°F.

To rate a test site based on the evaluation criteria, the site was assigned a score of 1 to 5 for each criterion, depending upon how good that particular criterion was met. Higher scores indicate better meeting of criteria. The total score is defined as the sum of the products of the individual evaluation criterion, X_i, with its respective relative weight, A_i.

$$\text{Total score} = \sum_{i=1}^{n} A_i X_i \qquad (3\text{-}1)$$

Tables 5 and 6 summarize basic data used for the quantitative criteria. Table 7 summarizes the qualitative criteria and their respective basis for rating. The ambient temperature range for the cities is determined by subtracting the minimum winter temperature from the maximum summer temperature. The supermarket density is correlated with the city population and the potential supermarket growth rate is correlated with the projected annual housing starts for the early 1980s (5). Because of the complexity of determing the potential annual energy savings for each candidate major city, it was assumed that the energy savings were equal for all major cities.

Table 8 presents criterion scores for each candidate engineering evaluation test site city and the total score for each site. Table 9 presents the top 12 cities in order of total scores. From this list, six candidate test sites, which are representative of the major regions in the United States

TABLE 6. - Supermarket energy costs

Region	Average Monthly Energy Costs (2)	
	Chains	Independents
New England	$5,129	$3,938
Middle Atlantic	7,019	4,396
East Central	4,727	3,244
Southeast	6,025	3,059
West Central	4,821	3,082
Southwest	6,027	3,441
Pacific	7,220	3,523

and are conveniently located for FMA and Friedrich, and are within the market domain of the participating supermarket chains, are selected and presented in Table 10. Also, the supermarket chains which have stores in the six candidate sites (6) and which have been solicited for program participation are listed.

For the Northeast region of the country, the candidate cities are Philadelphia and Boston. For the South region of the country, the candidate cities are Dallas and San Antonio. Both of these cities have numerous supermarket chains actively retailing. For the North Central region of the country, the candidate city is Cleveland and for the West region of the country the candidate city is Los Angeles.

For Phase III it is recommended that preproduction prototype unequal multicompressor parallel systems be placed in both Boston and in San Antonio. If additional funding becomes available then it is recommended that additional systems be placed in the remaining four cities. Should only one site be used, Boston is recommended.

TABLE 7. - Summary of rating basis for the qualitative criteria

Energy cost ($/month)	X_1
More than 7,000	5
6,000 to 7,000	4
5,000 to 6,000	3
4,000 to 5,000	2
Less than 4,000	1
Ambient temperature range (°F)	X_2
More than 90	5
80 to 90	4
70 to 80	3
60 to 70	2
Less than 60	1
Population (supermarket density)	X_3
More than 1,000,000	5
750,000 to 1,000,000	4
500,000 to 750,000	3
250,000 to 500,000	2
Less than 250,000	1
Major city	X_4
Arbitrary	
Potential supermarket growth rate (annual housing starts in the early 1980s)	X_5
More than 300,000	5
230,000 to 300,000	4
180,000 to 230,000	3
110,000 to 180,000	2
Less than 100,000	1
Supermarket chain participation	X_6
Positive letter of participation	5
No response to date	3
Negative letter of participation	0
Geographical location relative to Friedrich or FMA (miles)	X_7
Less than 150	5
150 to 500	4
500 to 1,000	3
1,000 to 1,500	2
More than 1,500	1
Institutional factors	X_8
Assumed constant except for specific cities	5

TABLE 8. - Summary of qualitative data used for engineering evaluation test site, city selection and total score

Regions	Cities	X_1 Energy cost	X_2 Ambient temperature and variation	X_3 Population and supermarket density	X_4 Major city	X_5 Potential supermarket growth rate	X_6 Supermarket chain participation	X_7 Geographical location relative to Friedrich & FMA	X_6 Institutional factors	Total score
Northeast										
New England	Boston, MA	3	4	3	5	1	5	5	5	248
	Hartford, CT	3	4	1	3	1	5	4	5	218
Middle Atlantic	New York, NY	5	4	5	5	4	3	3	5	254
	Philadelphia, PA	5	4	5	5	4	5	2	5	264
	Pittsburgh, PA	5	4	3	4	4	5	2	5	248
South										
South Atlantic	Washington, DC	5	3	4	5	5	0	2	5	204
	Atlanta, GA	4	3	3	4	5	5	2	5	236
	Miami, FL									
	Tampa, FL	4	1	2	3	4	5	2	5	200
		4	1	2	3	4	5	2	5	200
West South Central	New Orleans, LA	4	2	3	4	2	5	3	5	218
	Dallas, TX	4	4	4	5	4	5	4	5	270
	Houston, TX	4	2	5	5	4	5	4	2	232
	San Antonio, TX	4	3	4	4	4	5	5	5	266
North Central										
East North Central	Chicago, IL	2	5	5	5	5	5	3	2	242
	Cleveland, OH	2	4	4	5	5	5	3	5	240
	Detroit, MI	2	5	5	5	5	5	3	2	242
West North Central	St. Louis, MO	2	4	3	4	2	5	3	5	222
	Minneapolis, MN	2	5	2	3	2	5	2	5	212
West										
Mountain	Denver, CO	2	5	3	4	3	5	3	5	238
	Phoenix, AZ	5	3	3	4	3	5	3	5	242
Pacific	San Francisco, CA	5	1	3	5	5	5	1	5	218
	Los Angeles, CA	5	1	5	5	5	5	2	5	240
	Santa Ana, CA	5	1	2	4	5	5	2	5	218
	San Diego, CA	5	1	4	5	5	5	2	5	234
	San Jose, CA	5	1	3	5	5	5	1	5	218
	Seattle, WA	5	2	2	4	4	5	1	5	212

TABLE 9. - Ranking of the high-scoring cities considered for engineering evaluation testing

Cities	Score
1. Dallas, TX	270
2. San Antonio, TX	266
3. Philadelphia, PA	264
4. New York, NY	254
5. Boston, MA	248
6. Pittsburgh, PA	248
7. Chicago, IL	242
8. Phoenix, AZ	242
9. Detroit, MI	242
10. Los Angeles, CA	240
11. Cleveland, OH	240
12. Denver, CO	238

TABLE 10. - Six recommended cities for engineering evaluation testing

City	Total score	Region	Supermarket chains (6)
Philadelphia, PA	264	Northeast	The Kroger Co.
Boston, MA	248	Northeast	The Stop and Shop Companies, Inc. Jewel Companies, Inc. (Star Market Company)
Dallas, TX	270	South	Safeway Stores, Inc. The Kroger Co. H.E. Butt Grocery Co. Albertson's Inc. Winn-Dixie Stores, Inc.
San Antonio, TX	266	South	Safeway Stores, Inc. The Kroger Co. H.E. Butt Grocery Co. Albertson's Inc. Winn-Dixie Stores, Inc.
Cleveland, OH	240	North Central	The Kroger Co.
Los Angeles, CA	240	West	Safeway Stores, Inc. Ralph's Grocery Co. Albertson's Inc.

4. PHASE III PROGRAM PLAN

4.1 Introduction

The supermarket industry presently utilizes 4 percent (88 billion kWhr) of the annual national electric energy consumption (1). Results from the systems analysis presented in the Phase I Final Report (7) have indicated that there is tremendous potential for energy conservation in the supermarket industry. The major area of energy savings is the refrigeration system for display cases, which accounts for approximately 40 to 60 percent of the total supermarket energy consumption. The remaining store energy requirement is proportioned as follows: the heating, ventilating and air conditioning system (HVAC) accounts for approximately 15 to 20 percent; the lighting accounts for 20 to 25 percent; and miscellaneous energy systems account for 5 to 10 percent. Each of these energy systems can be improved and optimized for individual system performance; however, complex relationships exist among these systems and the improvement of one energy system may be detrimental to the performance of the remaining energy systems. Phases I and II of the Supermarket Energy Systems Program were structured to accomplish the following:

a. Phase I - System and Market Analysis:

   1. Review the overall energy requirements in stores and supermarkets

   2. Develop a thermodynamic computer program for the analysis of supermarket refrigeration systems

   3. Perform a marketing analysis of the supermarket industry, supermarket energy systems equipment manufacturing industry, and proposed new energy-efficient refrigeration systems

   4. Investigate and recommend new energy saving concepts and systems for development.

b. Phase II - Technical Development and Testing:

   1. Optimize the recommended supermarket refrigeration system

   2. Design and perform laboratory testing of a prototype refrigeration system

   3. Perform analysis and conceptual design of display cases.

The cumulation of the Phase I and II efforts has resulted in the laboratory development of an unequal parallel compressor refrigeration system with a microprocessor-based electronic control system. Also, a computer program for the analysis of open tub-type display cases has been formulated and new display case improvements have been generated. Preliminary test results have indicated that the prototype supermarket refrigeration system with proposed display case design improvements will reduce the supermarket refrigeration energy requirements by 40 percent. This equates to an annual national energy savings of approximately 14 to 21 billion kWhr if the refrigeration system is installed in all existing supermarkets.

However, for this new refrigeration system to be accepted by the supermarket industry, additional testing for performance validation and evaluation must be performed. The total supermarket energy system environment consisting of the HVAC, lighting, display cases, hot water and refrigeration systems would be difficult and expensive to simulate in a test laboratory; hence, engineering evaluation in a supermarket is a better way to establish credible performance data for the supermarket industry.

Phase III preproduction prototype system development is divided into two tasks and four subtasks:

a. Task 5 - Engineering Evaluation

- Preproduction Prototype System Design
- Manufacturing Facility Development/Modification
- Preproduction Prototype System Testing
- Deliverables 5D1, 5D2, 5D3, and 5F

b. Task 6 - Phase III Final Report.

The objective of Phase III is to perform engineering evaluation testing of the prototype supermarket refrigeration system with a microprocessor-based electronic control system. Detailed descriptions of the work plan for each task are presented in the following subsections.

4.2 Task 5 - Engineering Evaluation

The purpose of this task is to perform a comprehensive engineering evaluation test of the unequal parallel compressor system with the microprocessor-based electronic control system. Task 5 is divided into four major subtasks which are described below:

a. Preproduction Prototype System Design

b. Manufacturing Facility Development/Modification

c. Preproduction Prototype System Testing

d. Deliverables 5D1, 5D2, 5D3, and 5F.

Subtask 5A - Preproduction Prototype System Design

From the testing results of the 35-hp unequal multi-compressor parallel system and the microprocessor-based control system, a preproduction prototype system shall be designed. The thermodynamic/economic analysis and optimization of the unequal compressor system with the electronic control system shall be performed to determine both the optimum commercially viable design and the design which will be compatible with the engineering evaluation test site constraints. The analysis procedure will be very similar to the one performed for subtask 2A. Recommended design changes resulting from the prototype system testing performed in subtask 2C and design changes requested by the test site supermarket shall be made by FMA and Friedrich engineers. Other design changes necessary to accommodate Friedrich manufacturing standards and supermarket test site refrigeration requirements shall also be incorporated at this time. It is planned that the basic three compressor arrangement with a capacity ratio of 1:2:4 will be retained for the design of the preproduction prototype system. The maximum power rating of 35 hp may be altered, depending on the proposed refined analysis. Also, the system will be designed for medium temperature display cases.

The microprocessor-based electronic control system will be modified to accommodate the supermarket engineering evaluation test sites and the increased instrumentation required for monitoring refrigerant pressures, temperatures, and flow rates through the display cases, the display case temperatures, store internal and external temperatures and humidity, and compressors' operating pressures and temperatures. Also, the existing microprocessor software will be modified to accommodate the different instrumentation and data acquisition requirements.

The control functions of the microprocessor will *not* be increased for engineering evaluation testing. Instead FMA and Friedrich will attempt to use the existing microprocessor design including as few design changes as possible.

Because of the financial liability associated with the food products, a backup mechanical control system consisting of conventional supermarket equipment controls will also be included in the control system design.

For the preproduction prototype system design, a table of mechanical design, thermodynamic and manufacturing specifications and estimated performances shall be prepared. The table shall

include a summary of thermodynamic losses, component efficiencies, operating state points, process flow specifications, estimated annual performance factors for selected supermarket applications, manufacturing technology requirements and material specifications.

Since the instrumentation packages for field test shall be factory installed, drawings, parts list, and assembly instructions shall be provided for this subsystem. A minimum of two different instrumentation subsystems are projected; one is a basic set to monitor overall performance, while the second is a continuous recording system for continuously monitoring and recording critical performance parameters.

A complete set of manufacturing drawings, parts lists, and assembly instructions shall be prepared by FMA and Friedrich engineers. This documentation shall comply with existing Friedrich standards to assure ease of integration into their manufacturing operations.

The detailed manufacturing drawings, instrumentation requirements, and specifications/performance table shall be reviewed with the ORNL-TM prior to the fabrication of the preproduction prototype system.

Subtask 5B - Manufacturing Facility Development/Modification

The experience gained from the fabrication and testing of the prototype system during Phase II has revealed that for the proposed compressor system, excluding the microprocessor-based electronic control system, there will be very little changes in the Friedrich manufacturing facility for the fabrication of unequal parallel compressor systems. The components and subsystems are in most cases the same presently used in Friedrich's refrigeration equipment product lines. Since the majority of parallel compressor systems sold by Friedrich are custom-ordered, Friedrich maintains a separate manufacturing assembly line to fabricate these custom systems. In its Refrigeration Equipment Plant in San Antonio, TX, the prototype system tested during Phase II was assembled in this separate manufacturing and assembly line and it is planned to assemble the preproduction prototype systems for engineering evaluation testing in this same manufacturing and assembly line.

Because of the small quantity and its specialized nature, the microprocessor-based electronic control systems will be built, assembled, programmed, and debugged in the FMA Controls Laboratory in Oak Ridge, TN. Additional spare modules will be constructed in the event minor failures occur during engineering evaluation testing. Also, the software modifications will be made at FMA.

To the maximum extent possible, the manufacturing and assembly of this limited run shall resemble a custom-order production run. Provisions shall be made to identify and document problems that occur during production for inclusion in Deliverable 5D2.

Subtask 5C - Preproduction Prototype System Testing

Two preproduction prototype unequal parallel compressor systems shall be fabricated on the Friedrich manufacturing assembly line. The microprocessor-based control system shall be fabricated at the FMA microprocessor development laboratory in Oak Ridge, TN. It is tentatively planned to deliver and install a complete system in the following two major cities:

City	Candidate Supermarket Chain
Boston, MA	• The Stop and Shop Companies, Inc. • Star Market Company
San Antonio, TX	• H.E. Butt Grocery Company • Safeway Stores, Inc. • The Kroger Company

Within each of these cities are located at least two supermarket chains which have expressed an interest in participating in a cost-sharing manner in the engineering evaluation testing.

FMA engineers shall install the instrumentation and data acquisition subsystems and check the entire system. The instrumentation will include pressure transducers, thermocouples, watt transducers, humidity indicators, and refrigerant flow meters. Prior to performing long-term engineering evaluation testing, the FMA and Friedrich engineers shall perform preliminary testing which includes system design point operation and off-design point operation for medium temperature display cases.

Afterwards, long-term system testing shall be performed. The primary goal of the engineering evaluation testing is the accumulation of operational data of the preproduction prototype system in the supermarket environment. The operational data to be measured include:

a. Refrigeration loads

b. Compressor and miscellaneous power consumption

c. System heat gains and power losses

d. Temperatures, pressures, and mass flow rates at various points in the system

e. Number of compressor on/off cycles, compressor sequencing, and total elapsed running time

f. Ambient temperature and humidity.

Trained FMA or Friedrich technicians shall periodically inspect the system and gather data from the instrumentation package. Supermarket operations personnel will be trained on system operation and in startup procedures. Reports from the technicians will be submitted to FMA on a monthly basis which include:

a. Mechanical/electrical condition

b. Instrumentation data stored on cassettes.

Necessary spare parts will be available at the distributor servicing the supermarket for rapid repair of the system. When repairs cannot be made in the field, complete subsystems will be shipped from Friedrich and installed. Faulty components will be returned to FMA for analysis.

The Marketing/System Computer Program developed in Task 1 will be used to analyze the engineering evaluation test results and to help provide corrective actions in the event operating difficulties occur with certain components and subcomponents. Performance data shall be based on testing and evaluation methods compatible with ASHRAE and ARI specifications. The test results will be prepared in graphical and tabular form and shall be reviewed with the ORNL-TM.

In addition, performance data of conventional supermarket refrigeration equipment will be obtained from Friedrich. This data will be used to compare with the preproduction prototype system performance data. In this manner the total annual energy savings due to the unequal parallel compressor system with microprocessor-based electronic control system will be obtained.

Depending on the outcome of the engineering evaluation testing, recommendations for design changes shall be made and documented in Deliverable 5D3.

Subtask 5D - Deliverables 5D1, 5D2, 5D3, and 5F

Deliverable 5D1 - A preproduction prototype system design and manufacturing facility description report will be submitted for review to the ORNL-TM. The report will describe the design and supporting evaluations of the preproduction prototype system and the manufacturing facility to be used to fabricate the preproduction units.

Deliverable 5D2 - A manufacturing and test plan report will be submitted for review to the ORNL-TM. The report will describe the manufacturing of the preproduction units, the detailed test procedures, and the selection of the test sites.

Deliverable 5D3 - An engineering evaluation testing result report will be submitted for review to the ORNL-TM. The report will describe the results and evaluations of the testing.

Deliverable 5F - A final report for Task 5 reflecting resolution of comments from the ORNL-TM reviews of Deliverables 5D1, 5D2, and 5D3 will be submitted.

Schedule and Distribution

Deliverable	Schedule	Copies to ORNL-TM
5D1	Within 5 months from start of Phase III	3
5D2	Within 12 months from start of Phase III	3
5D3	Within 22-1/2 months from start of Phase III	3
5F	Within 1 month after the ORNL review. Allow 2 weeks for ORNL review	8

4.3 Task 6 - Phase III Final Report

Deliverable 6 - A final report will be prepared which will include a summary, covering all aspects of the project, which reflects resolution of comments from the ORNL-TM based on review of a draft copy (allow 2 weeks for ORNL review) and Deliverable 5F.

Schedule and Distribution - Submit to the ORNL-TM within 2 months after completion of Task 5 a photo-ready copy and 550 copies.

Additional Deliverables - Submit eight copies of a monthly report to the ORNL-TM by the tenth day of each calendar month. The report shall include completed DOE Forms 533, 534, and 535 showing costs, personpower, and schedule as estimated in the approved plans. A narrative of progress and events shall be included as part of the monthly report and shall highlight any problems and the subcontractor's solution. The narrative should be expanded on a quarterly basis to represent a substantial cumulative summary of progress and problems of the project.

Conduct informal briefings at the subcontractor's facility as required. It is anticipated that these will occur at the completion of each task following ORNL-TM reviews of the deliverables due at these times.

Present formal briefings, at UCC-ND's option, of the project semi-annually at meetings will be held at either Washington, DC, or Oak Ridge, TN.

A Program Advisory Committee shall be maintained and shall consist of representatives from the supermarket industry. This committee shall meet with the development program manager and engineers and be convened approximately every 6 months either in Waltham, MA, or San Antonio, TX. The purpose of the committee shall be to evaluate and critique the research and development project. The development program manager shall submit, to the ORNL-TM, letter summaries of the committee meetings and any resulting recommendations.

Proprietary Information - Any proprietary information furnished shall be incorporated in separate reports and not subject to unlimited distribution.

5. PERSONPOWER ALLOCATION, SCHEDULE, AND COSTS SUMMARY

In this section, personpower allocation summary, schedule and cost summary are prepared for each task. The cost summary includes both direct costs to the government and cost sharing offered by industry. Because the task program plans were structured to be independent of one another, the tasks' schedules, personpower allocations and cost summaries are prepared to be independent of one another.

5.1 Schedules and Personpower Allocations

The proposed schedules for Tasks 5 and 6 are shown in Figures 3 and 4, respectively. The schedules show, by subtasks, the duration of each line item, the important program milestones, and due dates of the program deliverables. The duration for each of the tasks is the following:

Task No.	Duration (months)
5	24.0
6	2.5

The personpower allocations for Task 5 and Task 6 are shown in Tables 11 and 12, respectively. The management and engineering labor requirements are summarized for each task and subtask. The total personpower effort for each task is the following:

Task No.	Total Personpower Effort (year)
5	4.6
6	0.3

5.2 Total Cost Summary

The total individual task cost includes government cost and the industry cost sharing contribution and is summarized as follows:

Task	Government Cost ($)	Industry Cost Sharing Contribution ($)	Total Cost ($)
5	576,393	350,848	927,241
6	34,220	14,235	48,455

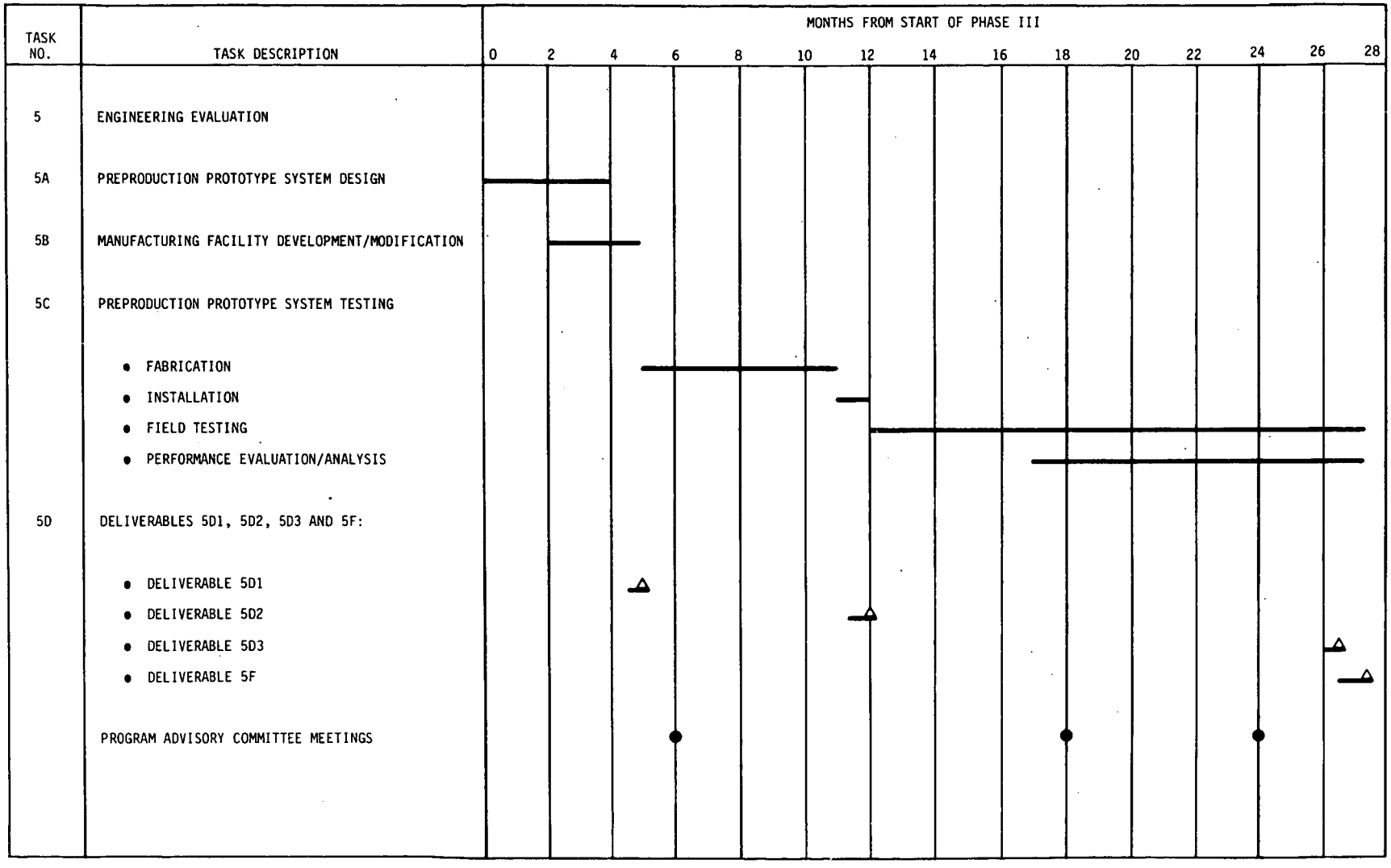

FIGURE 3. - Schedule for Task 5 - Engineering Evaluation.

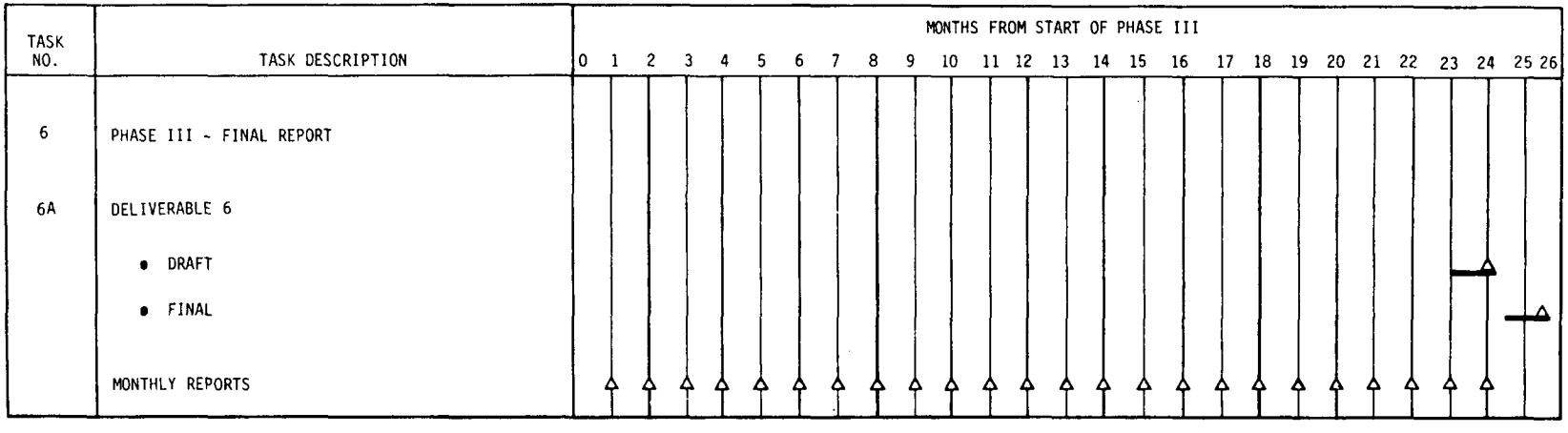

FIGURE 4. - Schedule for Task 6 - Phase III Final Report.

TABLE 11. - Personpower allocation for Task 5 - Engineering Evaluation

Task No.	Task Description	Personpower Allocation									
		Foster-Miller Associates						Friedrich AC&R Co.			
		PM	SE	PE	DE	Tech	AS	SE	PE	Tech	SM*
5	Engineering Evaluation										
5A	Preproduction Prototype System Design	80	150	500	360	-	80	100	250	-	100
5B	Manufacturing Facility Development/ Modification	-	-	-	-	-	-	50	80	-	250
5C	Preproduction Prototype System Testing										
	• Fabrication	90	40	400	100	400	-	80	100	-	200
	• Installation	100	-	140	-	260	-	80	100	-	100
	• Field Testing	280	200	600	100	480	-	100	180	200	100
	• Performance Evaluation/ Analysis	200	200	400	200	80	50	80	40	-	110
5D	Deliverables 5D1, 5D2, 5D3 and 5F										
	• Deliverable 5D1	40	-	20	-	-	60	80	-	-	80
	• Deliverable 5D2	40	20	80	-	-	60	40	-	-	40
	• Deliverable 5D3	40	80	60	-	-	60	40	-	-	40
	• Deliverable 5F	40	40	60	-	-	60	40	-	-	40
	Program Advisory Committee Meetings	80	80	40	-	-	-	-	-	-	40
	Task 5 Total	990	810	2,300	760	1,220	370	690	750	200	1,100
	Total by Task: 9,190										

LEGEND:
PM - Program Manager
SE - Senior Engineers
PE - Project Engineers
DE - Design Engineers
Tech - Technicians
AS - Administrative Support
SM* - Friedrich AC&R Co. Senior Management Labor Cost Sharing Contribution

TABLE 12. - Personpower allocation for Task 6 - Phase III Final Report

Task No.	Task Description	Personpower Allocation								
		Foster-Miller Associates					Friedrich AC&R Co.			
		PM	SE	PE	Tech	AS	SE	PE	Tech	SM*
6	Phase III Final Report									
6A	Deliverable 6									
	• Draft	80	40	80	-	100	-	-	-	80
	• Final	40	10	40	-	50	-	-	-	40
	Task 6 Total	120	50	120	-	150	-	-	-	120
	Total by Task: 560									
	Monthly Reports	132	-	-	-	45	-	-	-	-

6. REFERENCES

1. Guide to Energy Conservation for Grocery Stores, Federal Energy Administration, FEA/D-76/096, January 1977.

2. Progressive Grocer, Volume 60, April 1981.

3. "Weather in the United States Cities for 1974," Environmental Data Service, U.S. Department of Commerce, 1974.

4. J.F. Kreider and F. Kneeth, Solar Heating and Cooling, McGraw-Hill, New York, NY, 1975.

5. "United States Regional Housing Markets to 1990," Predicasts Report No. 141, Predicasts, Inc., Cleveland, OH, August 1977.

6. Progressive Grocer's Marketing Guidebook, 1981.

7. Toscano, W.M. and M.J. Oven, "Highly Energy-Efficient Supermarket Systems, Phase I - System and Market Analysis," Foster-Miller Associates, Inc. ORNL/SUB-86X-60601C/1, September 1980.