CONF-820664--8

DE82 018179

DESIGN AND LABORATORY TESTING OF AN UNEQUAL PARALLEL MULTICOMPRESSOR SUPERMARKET REFRIGERATION SYSTEM WITH A MICROPROCESSOR-BASED ELECTRONIC CONTROL SYSTEM*

William M. Toscano
Mark J. Oven
David H. Walker
Foster-Miller Associates, Inc.
Waltham, Massachusetts 02254
- and -
Edward A. Vineyard
William L. Cooper, Jr.

Prepared under Subcontract 86X-61601C for
Energy Division
Oak Ridge National Laboratory
Oak Ridge, Tennessee 37830

To be presented to the
ASHRAE Semi-Annual Meeting
Toronto, Canada
June 27-July 1, 1982

By acceptance of this article, the publisher or recipient acknowledges the U.S. Government's right to retain a nonexclusive, royalty-free license in and to any copyright covering the article.

DESIGN AND LABORATORY TESTING OF AN UNEQUAL PARALLEL MULTICOMPRESSOR SUPERMARKET REFRIGERATION SYSTEM WITH A MICROPROCESSOR-BASED ELECTRONIC CONTROL SYSTEM

William M. Toscano, Ph.D.
Division Manager
Foster-Miller Associates, Inc.
Waltham, MA 02254

Mark J. Oven, Project Engineer
Foster-Miller Associates, Inc.
Waltham, MA 02254

David H. Walker, Project Engineer
Foster-Miller Associates, Inc.
Waltham, MA 02254

William L. Cooper, Jr., Project Manager
Union Carbide Corporation
Oak Ridge, TN 37830

Edward A. Vineyard, Project Manager
Union Carbide Corporation
Oak Ridge, TN 37830

ABSTRACT

The Supermarket Energy Systems Program was structured to investigate and develop new highly energy-efficient supermarket systems. A supermarket refrigeration system consisting of:

- Unequal parallel compressors
- Condenser with floating head-pressure control
- Microprocessor-based electronic control system.

was analyzed, designed, and tested. The total system capacity is 35 hp and three compressors of 5, 10, and 20 hp capacity were determined to be the optimum number and capacity distribution. Compared to the conventional supermarket refrigeration systems, the three unequal parallel compressor systems with R-12 will demonstrate a maximum annual energy savings of 29,100 kWhr or 26 percent and with R-502 will demonstrate a maximum annual energy savings of 20,100 kWhr or 15 percent.

A compressor capacity control algorithm was designed to select the optimum compressor combination for each operating condition to match compressor capacity to refrigeration load. A microprocessor system based on an Intel 8085 microprocessor was selected for system control and data acquisition. The economic analysis revealed that for a payback period of 3 years or less, an added microprocessor-based electronic controls cost between $500 to $1500 is acceptable.

Testing was performed on the unequal parallel compressor system over a refrigeration load range of 78,000 to 160,000 Btu/hr. For refrigerant R-12, the increase in the energy efficiency ratio (EER) for the microprocessor-based electronic control system as compared to the mechanical pressure control system ranged from 9.8 to 12.5 percent.

INTRODUCTION

The supermarket industry presently utilizes 4 percent (88 billion kWhr) of the annual national electric energy consumption.[1] There is a tremendous potential for energy conservation in the supermarket industry. The major area of energy savings is the refrigeration system for display cases, which accounts for approximately 40 to 60 percent of the total supermarket energy consumption. The remaining store energy requirement is proportional as follows: the heating, ventilating and air conditioning system (HVAC) accounts for 15 to 20 percent; the lighting accounts for 20 to 25 percent; and miscellaneous energy systems account for 5 to 10 percent. Each of these energy systems can be improved and optimized for individual system performance; however, complex relationships exist among these systems and the improvement of one energy system may be detrimental to the performance of the remaining energy systems. The purpose of this project is to design and develop an energy efficient supermarket refrigeration system.

A supermarket refrigeration system consisting of:

- Unequal parallel compressors
- Condenser with floating head-pressure control
- Microprocessor-based electronic control system

was analyzed, designed, and tested. The total system capacity is 35 hp and three compressors of 5, 10, and 20 hp capacity were determined to be the optimum number and capacity distribution.

The microprocessor system included an Intel 8085 microprocessor for system control and data acquisition. Preliminary test results have indicated that the prototype supermarket refrigeration system with proposed display case design improvements[2] will reduce the supermarket refrigeration energy requirements by 40 percent. This equates to an annual national energy savings of approximately 14 to 21 billion kWhr if the refrigeration system is installed in all existing supermarkets.

The present paper reports the design study and development testing.

SYSTEM ANALYSIS AND DESIGN

After the completion of a market analysis[2], a system analysis and design was initiated for a supermarket refrigeration system which consists of:

a. Several compressors of differing capacities piped in parallel between common suction and discharge headers

b. A condenser/receiver subsystem that can take advantage of low ambient temperatures

c. A microprocessor-based control system to optimize the system operation.

Detailed analyses were performed to describe the optimum combination of compressors in an unequal parallel arrangement. First, a system size of 35 hp was selected; this is a typical size for supermarket refrigeration compressor racks. A computer analysis was employed to generate the optimum combinations two through six compressors and the distribution of capacities among the compressors in the system. The possible compressor sizes that are currently commercially available that could be used to achieve the total 35 hp are: 1, 1.5, 2, 3, 5, 7.5, 10, 15, 20, 25, and 30 hp. The optimization is based on the minimization of suction pressure bandwidth. For the case of the unequal parallel compressor system, the ability of the capacity control of the system to match the refrigeration capacity to the refrigeration load helps to narrow the suction pressure bandwidth over which the system operates. As the refrigeration load, and therefore the suction pressure, changes, the compressor sequences will be adjusted so that the capacity of the system will be the same or slightly greater than the required refrigeration load.

Second, an energy consumption model for unequal parallel compressor systems was developed. The refrigeration load characteristics, i.e., load magnitude and its annual variation, are dependent upon the particular supermarket internal configuration, display case types, number, and layout, and HVAC system. Therefore, in order to obtain representative performance values of the unequal parallel compressor systems, two refrigeration load profiles were

examined. The first profile is a constant refrigeration load of a value equal to the maximum load (166,000 Btu/hr for the R-12 systems and 82,000 Btu/hr for the R-502 systems) experienced by the refrigeration system. The second profile is a bell-shaped refrigeration profile dependent upon ambient temperature. The outside ambient temperature variation is the major contribution to the annual change in refrigeration load within a supermarket; the refrigeration load variation may be as large as 50 percent during a single year. For the variable refrigeration load profile model it is assumed that the peak refrigeration load will correspond to the design refrigeration load and will occur at the maximum summer ambient temperature, and the minimum refrigeration load will correspond to 40 percent of the design refrigeration load and will occur at the minimum winter ambient temperature.

Also included in both profile models of the supermarket refrigeration system was floating head-pressure control. In this system, the condenser temperature is allowed to follow the ambient temperature. Considerable improvement in the system energy efficiency ratio (EER) can be realized at lower ambient temperatures because the refrigeration capacity of the system is increased while the compressor power is decreased if the condenser temperature and pressure are allowed to float. In order to prevent the refrigerant from flashing before it reaches the display case evaporators, the minimum condenser temperature was set at 65°F for the R-12 systems and at 40°F for the R-502 systems.

The annual energy consumption was calculated for a number of unequal parallel compressor systems operating with R-12 at an evaporator temperature of 20°F and with R-502 at an evaporator temperature of -20°F. For comparison, a base case which consists of three equal capacity parallel compressors whose combined capacity is 35 hp was also examined. It was assumed that the base case has floating head pressure control with a minimum condenser temperature set at 65°F; this is not the case for typical conventional supermarket refrigeration systems. The results of this annual energy consumption analysis are presented in Table 1. For both load profiles and refrigerants, the results are similar: the unequal parallel systems consume less energy than the equal parallel system for systems of three or more compressors. The two unequal parallel compressor systems consume more energy that the three equal parallel compressor systems when operating on either R-12 or R-502 refrigerants. Also included in Table 1 is the compressor capacity distributions which operated within the smallest suction pressure bands for four different refrigeration load distributions outlined in Reference 2.

Third, an economic analysis was performed to determine which unequal parallel compressor arrangement for a supermarket refrigeration system will yield the largest life cycle savings and corresponding shortest payback period. The sensitivity of the economic analysis results to variances in energy cost escalation rates and discount rates were also investigated.

The life cycle savings is defined as the difference in life cycle costs between the base case system and the unequal parallel compressor system being considered. If the salvage values and the maintenance costs are assumed to be the same for all systems considered, the expression for the life cycle savings can be shown to reduce to the following:

$$\text{Life Cycle Savings} = \Delta I_s + \Delta P_o \sum_{j=1}^{N} \left(\frac{1+E_p}{1+i}\right)^j \qquad (1)$$

where

ΔI_s = the initial cost difference between the base case and the system being examined

ΔP_o = the annual cost of electrical energy difference between the base case and the system being examined

N = the useful life of the system in years

E_p = the annual escalation rate of the electrical energy cost

i = the annual discount rate.

The initial cost of the unequal parallel compressor refrigeration systems is divided into two components: the cost of the compressors, and the cost of the rack and peripheral equipment associated with the compressors. The rack cost also includes the system assembly cost. An empirical relationship for the compressors cost was derived.[3]

$$\text{Compressor Cost (\$)} = 118.8\ (\text{horsepower})^{0.67} \qquad (2)$$

Similarly, an empirical relationship for the rack cost was derived.[3]

$$\text{Rack Cost (\$)} = 1218\ (\text{number of compressors}) + 6726 \qquad (3)$$

The initial system cost, life cycle savings, and payback period for each of the unequal parallel compressor systems considered in the analysis are presented in Table 2. The payback period is the time period required for the life cycle savings to be equal to the difference in the initial cost between the system being considered and the base case system. The economic analysis showed that for both R-12 and R-502 refrigerants, the greatest life cycle savings are obtained with an unequal parallel compressor system employing three compressors with a 1:2:4 size or capacity ratio. This ratio for a 35 hp system equates to a rack with 5 hp, 10 hp, and 20 hp compressors. In general, the savings obtained by the unequal parallel systems were smaller for the R-502 refrigerant than for the R-12 refrigerant.

Also included in the economic analysis was the investigation of the impact of the cost for a microprocessor-based electronic control system on the total system cost. The results showed that for a payback period of three years or less (a reasonable payback period for the supermarket industry) an added controls cost between $500 to $1500 is acceptable.

The last analysis performed was the comparison of the three unequal parallel compressor systems *with* floating head-pressure control to a conventional supermarket refrigeration system *without* floating head pressure control. The conventional system consists of three equal parallel compressors of a total capacity comparable to the three unequal parallel compressor system. As is the standard practice the condenser temperature was artificially maintained at a minimum value of 90°F. For the two refrigeration load profiles the annual electrical energy consumptions are presented in Table 3. Compared to the conventional supermarket refrigeration systems, the three unequal parallel compressor systems with R-12 will demonstrate a maximum annual energy savings of 29,100 kWhr or 26 percent and with R-502 will demonstrate a maximum annual energy savings of 20,100 kWhr or 15 percent.

Various schemes for controlling the condenser pressure, or head pressure, were considered. It was decided that the end product design could best be served by a detailed experimental evaluation of two alternate schemes. Both the Seasonmiser® system, marketed by McQuay Perfex, Inc., and the ambient subcooling system utilized by several supermarket refrigeration equipment manufacturers were designed into the test system.

A compressor capacity control algorithm was designed to select the optimum compressor combination for each operating condition to match compressor capacity to refrigeration load, and therefore to minimize suction pressure variation. In addition, the algorithm keeps track of compressor off-time to ensure that short cycling of compressors does not occur, and that the compressors can respond to special conditions, such as defrost periods. With the algorithm, the three unequal parallel compressor systems can operate in eight different modes or capacity states.

A microprocessor system based on an Intel 8085 microprocessor and Pro-Log Corporation components was selected for system control and data acquisition. The control system is more than adequate to accommodate large amounts of data generated during this test phase, can be modularily reduced to a simple compressor pressure control for end product use, or can be expanded to control other parameters in the refrigeration system, such as defrost, heat reclaim, and monitor and alarm functions.

The components described above have been designed and integrated into a complete test system. The test system is composed of two subsystems: the refrigeration system, including compressor rack, condenser, microprocessor controller, and heat reclaim coil; and the refrigeration load model, which includes a display case, a walk-in cooler, and two brine chillers. The heat reclaim coil is used in a supermarket refrigeration system to utilize the heat rejected for refrigeration to supply space heating to the store. The elements of the experimental refrigeration system are depicted schematically in Figure 1 and the refrigeration load model is depicted in Figure 2. The test system can be operated either in a fixed or floating head pressure mode, and includes heat reclaim and hot gas defrost, thus effectively simulating a supermarket application. The refrigeration load can simulate applications from small, short-term load variations to larger variations over long time periods. A photograph of the experimental refrigeration system depicted in Figures 1 and 2 is presented in Figure 3.

Laboratory Testing and Test Results

The performance of a refrigeration system is measured through the value of the energy efficiency ratio (EER) achieved by the system. The EER is defined as:

$$EER = \frac{\text{Refrigeration Supplied}}{\text{Energy Input}} \tag{4}$$

The EER can be considered as either an instantaneous or long-term quantity. In the instantaneous case, the refrigeration supplied is the rate at which refrigeration occurs and the energy consumption is the power consumed by the system at the instant of measurement. The long-term case is found by first summing the instantaneous refrigeration loads and power consumptions, measured at discrete time intervals, and then dividing the total refrigeration supplied by the total energy consumed. The total refrigeration supplied can be expressed as:

$$\text{Refrigeration Supplied} = \sum_{i=1}^{N} \dot{Q}_i \Delta\tau_i \tag{5}$$

where

$\dot{Q}_i$ = the instantaneous refrigeration load of the system

$\Delta\tau_i$ = the time interval between measurements

N = number of time intervals.

The total energy consumed is determined from:

$$\text{Energy Consumed} = \sum_{i=1}^{N} \dot{W}_i \Delta\tau_i \tag{6}$$

where

$\dot{W}_i$ = the instantaneous power consumption of the system.

For this experimental refrigeration system it was necessary to correlate the performance of the system as measured by the EER with the control of the unequal parallel compressors and other operating conditions of the refrigeration system. Of particular concern are:

a. The condenser temperature and pressure
b. The ambient temperature
c. Refrigerant subcooling
d. Suction pressure and temperature
e. Compressor sequencing and operation.

All of these quantities were measured simultaneously and in conjunction with the performance measurements.

It was necessary to determine the refrigeration load of the walk-in chests, the display case, and each of the brine loops. The refrigeration load of each of the brine loops can be determined from:

$$\dot{Q}_{Bi} = \dot{m}_B C \, (T_{in} - T_{out})_B \qquad (7)$$

where

$\dot{Q}_{Bi}$ = the refrigerant load (Btu/hr)

$\dot{m}_B$ = the mass flow rate of the brine (lb/hr)

C = the specific heat of the brine (Btu/lb-^{o}F)

T_{in} = the inlet temperature of the brine (^{o}F)

T_{out} = the outlet temperature of the brine (^{o}F).

The refrigeration loads of the walk-in chest and the display case are determined from:

$$\dot{Q}_{wci} = \dot{m}_{wc} (H_{out} - H_{in})_{wc} \tag{8}$$

$$\dot{Q}_{dci} = \dot{m}_{dc} (H_{out} - H_{in})_{dc} \tag{9}$$

where

$\dot{Q}_{wci}$, $\dot{Q}_{dci}$ = the refrigeration loads of the walk-in chest and display case, respectively (Btu/hr)

$\dot{m}_{wc}$, $\dot{m}_{dc}$ = the mass flow rates of the refrigerant through the walk-in chest and display case, respectively (lb/hr)

H_{out} = the outlet enthalpy of the refrigerant (Btu/lb)

H_{in} = the inlet enthalpy of the refrigerant (Btu/lb).

The need to obtain many data points at short intervals over long test periods necessitated an automatic data acquisition system. As a result, all data that are significant to the characterization of system operation and the calculation of the quantities described above were measured automatically at regular intervals via the microprocessor data acquisition system. Electronic data measuring techniques which provide analog signals compatible with the microprocessor include standard

components such as thermocouples, pressure transducers, and Watt transducers. In addition, an electronic refrigerant flowmeter was used in the display case and unit cooler lines. Analog measurements from these instruments are connected to analog-to-digital converter modules at the microprocessor. The digital data is then transmitted from the microprocessor and recorded on magnetic tape for temporary storage and data reduction

The test plan major goals accomplished during testing were:

a. Testing of the unequal parallel compressor combination

b. Optimization of the capacity control algorithm parameters

c. Monitoring of oil flow in the system.

The floating head pressure system and heat reclaim system were not tested.

Tests were performed over a refrigeration load range of 78,000 to 160,000 Btu/hr. This range represents approximately 35 to 90 percent of the design refrigeration capacity of the system. The duration of each test was approximately 24 to 48 hr. During this time period, hot gas defrost cycles were performed each 24 hr on the display case and walk-in chest. Also, system instrumentation measurements were automatically taken at 1-min intervals.

Identical test conditions were used to test both the microprocessor-based electronic control system and the conventional mechanical pressure control system.

After preliminary testing, cut-in and cut-out pressures for the microprocessor control algorithm were determined and are shown in Table 4. And the mechanical pressure control settings for the unequal parallel compressors are shown in Table 4.

The results of the control systems comparison tests are presented in Table 5. In these tests:

a. The experimental refrigeration system was operated at three refrigeration load-levels between 78,000 and 160,000 Btu/hr

b. The refrigerant used was R-12

c. The evaporator temperatures of the load models were maintained at approximately 20°F

d. The system was alternately controlled by the microprocessor-based electronic control system and the mechanical pressure control system.

Presented in this table is the following information for each test case:

a. The average refrigeration load experienced by the system

b. The average power consumption of the system, considering individually the power consumption of the compressors and of the total system

c. The EER of the system for both the compressor power only and total system power cases.

Presented also is a brief description of the operating conditions during testing including:

a. Ambient temperature range

b. Condensing pressure range

c. Average suction pressure.

The results presented in this table clearly show that the unequal parallel compressor system using the microprocessor-based electronic control system is the superior system. The increase in EER for the microprocessor-based electronic control system as compared to the mechanical pressure control system ranged from 9.8 to 12.5 percent in the compressor power only case and from 5.9 to 9.1 percent for the total system power case.

The reason for this improvement in performance can be explained by examining the operating characteristics of the two systems. Presented in Table 6 is a summary of the frequency of operation of compressor states for each of the tests conducted. The numbers shown in this table give the percentage of compressor operating states occurring compared to the total number of operating conditions observed. For example, for the case of Run No. 003, 37 percent of the time a total of 25 hp of compressor

capacity was utilized; 35 percent of the time 20 hp was utilized; 19 percent of the time 15 hp was utilized, and 9 percent of the time 10 hp was utilized. A similar compilation and distribution is presented for all of the tests described in Table 5.

Several points should be noted about the data presented in Table 5. At the lower and middle refrigeration load levels, the refrigeration system control by the microprocessor achieved an EER of the order 7.0 while at the high refrigeration load level the EER of this same system reduced to 5.6. This can be explained by examining the compressor capacity distribution in Table 6. At the high refrigeration load the refrigeration system operated at the maximum capacity of 35 hp for approximately 65 percent of the time. It should also be noted that the mechanical pressure control system operated at 35 hp for 97 percent of the time and achieved an EER of 5.1. This would suggest that a limiting value of EER of approximately 5.0 exists and would occur for either system if all compressors were operating continuously.

At the three refrigeration load levels, Run Nos. 008, 010, and 012, a general shift of compressor capacity states can be noted for the mechanical pressure control system. This system, therefore, did respond to the changes in refrigeration load, but, in all three cases, tended to operate at one particular compressor operating state. In comparison, the refrigeration system with microprocessor-based electronic control system operated over

two or more capacity states, indicating that this system was alternating to match the refrigeration capacity with refrigeration load in a more efficient manner. By shifting to a lower compressor state, less energy is being consumed, thus increasing the EER of the refrigeration system.

CONCLUSIONS

A market and system analysis revealed that unequal parallel compressor system with a floating head-pressure control system offers the best potential for substantial short-term energy conservation in the supermarket industry.

A system consisting of:

a. Unequal parallel compressors
b. Condenser with floating head-pressure control
c. Microprocessor-based electronic control system

was analyzed and designed. The total system capacity is 35 hp and three compressors of 5, 10 and 20 hp capacity were determined to be the optimum number and capacity distribution. Compared to the conventional supermarket refrigeration systems, the three unequal parallel compressor system with R-12 will demonstrate a maximum annual energy savings of 29,100 kWhr or 26 percent and with R-502 will demonstrate a maximum annual energy savings of 20,100 kWhr or 15 percent.

Further economic analysis revealed that for a payback period of 3 years or less, an added controls cost between $500 to $1500 is acceptable. A compressor capacity control algorithm was designed to select the optimum compressor combination for each

operating condition to match compressor capacity to refrigeration load.

The test system design includes two subsystems: the refrigeration system, including compressor rack, condenser, microprocessor controller, and heat reclaim coil; and the refrigeration load model, which includes a display case, a walk-in cooler, and two brine chillers.

The experimental refrigeration system was fabricated and testing was performed for the unequal parallel compressor system over a refrigeration load range of 78,000 to 160,000 Btu/hr. For the tests, the refrigerant used was R-12, the evaporator temperatures were maintained at 20°F, and the system was alternatively controlled by the microprocessor-based electronic control system and the mechanical pressure control system. The increase in EER for the microprocessor-based electronic control system as compared to the mechanical pressure control system ranged from 9.8 to 12.5 percent.

REFERENCES

1. Guide to Energy Conservation for Grocery Stores, Federal Energy Administration FEA/D-76/096, January, 1977.

2. Toscano, W.M., Heaton, D.M., Krepchin, I.P., Lee, K., Oven, M.J., and Walker, D.H., Highly Energy-Efficient Supermarket Systems, Volume 1, ORNL/Sub-81/61601/1, Foster-Miller Associates, Inc., October, 1982.

3. Cost data provided by Friedrich Air Conditioning and Refrigeration Company, San Antonio, TX.

ACKNOWLEDGMENTS

The Supermarket Energy Systems Program was supported in part by the United States Department of Energy under contract No. W-7405-eng-26. Considerable technical and management support was provided by Messrs. Virgil Haynes of Oak Ridge National Laboratory (ORNL) and Ronald Fiskum of DOE. Messrs. William Cooper, Jr. and Edward Vineyard, the ORNL technical monitors for the program, contributed significantly to the technical direction of the total program.

Messrs. Dieter Grether of Friedrich Air Conditioning and Refrigeration Company and Todd Mann of the Food Marketing Institute provided considerable marketing and technical information.

TABLE 1. - Annual energy consumption analysis for the unequal parallel compressor supermarket refrigeration system

Number of compressors	Compressor capacity distribution (compressor sizes expressed in horsepower)	Annual energy consumption (10^3 kWhr)			
		Variable refrigeration load profile		Constant refrigeration load profile	
		R-12	R-502	R-12	R-502
3 equal (base case)	-	96.2	90.6	123.2	121.0
2	10, 25	98.1	93.4	122.1	122.4
3	5, 10, 20	83.8	86.7	112.6	114.2
4	3, 7.5, 10, 15	82.8	85.4	108.2	112.3
5	1, 2, 5, 7.5, 20	81.0	84.0	104.2	111.6
6	1, 1.5, 2, 3, 7.5, 20	79.5	83.9	103.6	110.8

For R-12 systems - Evaporator temperature = 20°F
Minimum condenser temperature = 65°F

For R-502 systems - Evaporator temperature = -20°F
Minimum condenser temperature = 40°F

TABLE 2. - Life cycle savings analysis of unequal parallel compressor refrigeration systems

Number of compressors	Initial system cost ($)	Variable refrigeration load profile				Constant refrigeration load profile			
		Life cycle savings ($)		Payback (years)		Life cycle savings ($)		Payback (years)	
		R-12	R-502	R-12	R-502	R-12	R-502	R-12	R-502
3 equal (base case)	12,200	-	-	-	-	-	-	-	-
2	10,700	250	(361)	N/A	N/A	2,199	575	N/A	N/A
3	12,200	8,114	2,567	0	0	6,945	4,477	0	0
4	13,500	7,400	2,056	2	5	8,436	4,343	1	3
5	14,800	7,320	1,707	3	8	9,788	3,552	3	6
6	16,100	6,990	1,232	5	10	8,872	2,765	4	8

Assumptions for analysis:

a. System useful life = 15 years

b. Initial electrical energy cost = $0.05/kW-hr

c. Annual electrical energy cost escalation rate = 0.08

d. Discount rate = 0.10

TABLE 3. - Annual electrical energy consumption comparison of three unequal parallel compressor and conventional supermarket refrigeration systems

System description	Annual electrical energy consumption (10^3 kW-hr)			
	Variable refrigeration load profile		Constant refrigeration load profile	
	R-12	R-502	R-12	R-502
Three unequal parallel compressors floating head pressure*	83.8	86.7	112.6	114.2
Three equal parallel compressors minimum condenser temperature = 90°F	112.9	99.9	148.0	134.3
	Percent annual energy savings			
	25.8	13.2	23.9	15.0

*For R-12 systems, minimum condenser temperature = 65°F
For R-502 systems, minimum condenser temperature = 40°F.

TABLE 4. - Pressure control settings

Compressor	Cut-in pressure (psig)	Cut-out pressure (psig)
20-hp compressor	18	5
10-hp compressor	22	7
5-hp compressor	20	9

a. Mechanical pressure control settings for the unequal parallel compressors.

Cut-in pressures (psig)	Cut-out pressures (psig)
(CI(0) - 17	CO(0) - 12

b. Pressure settings for the microprocessor-based electronic compressor control.

TABLE 5. - Results of the comparison test between microprocessor-based electronic control and mechanical pressure control of the experimental refrigeration system

Run No.	Control type	Average refrigeration supplied (Btu/hr)	Average power consumed (kW)		Energy efficiency ratio (Btu/hr/W)		Percent improvement in energy efficiency ratio (%)		Ambient temperature range (°F)		Condensing pressure range (psig)		Average suction pressure (psig)
			Compressor	Total system	Compressor	Total system	Compressor	Total system	High	Low	High	Low	
007	Microprocessor	78,400	11.6	14.6	6.8	5.4	11.5	5.9	77	66	89	75	14.7
012	Mechanical pressure	82,400	13.4	16.2	6.1	5.1			75	70	90	84	14.7
003	Microprocessor	106,500	14.7	17.7	7.2	6.0	12.5	9.1	74	65	86	80	14.9
008	Mechanical pressure	120,000	18.9	21.8	6.4	5.5			75	69	91	87	14.0
005	Microprocessor	160,500	28.6	31.4	5.6	5.1	9.8	8.5	79	69	123	107	15.4
010	Mechanical pressure	155,000	30.4	33.0	5.1	4.7			78	68	124	110	14.8

Average evaporator pressure - 20 psig
Refrigerant - R-12

TABLE 6. - Frequency of occurrence of a given compressor operating state

Run No.	Control type	Compressor operating states (percentage of total operating time)							Average refrigeration load (Btu/hr)	Energy efficiency ratio (Btu/hr/W)	
		5 hp	10 hp	15 hp	20 hp	25 hp	30 hp	35 hp		Compressor	Total system
007	Microprocessor	3	52	45	-	-	-	-	78,400	6.8	5.4
012	Mechanical pressure	-	-	-	94	6	-	-	82,400	6.1	5.1
003	Microprocessor	-	9	19	35	37	-	-	106,500	7.2	6.0
004	Mechanical pressure	-	-	-	-	100	-	-	120,800	6.4	5.5
005	Microprocessor	-	-	-	-	1	34	65	160,500	5.6	5.1
010	Mechanical pressure	-	-	-	-	-	3	97	155,000	5.1	4.7

FIGURES

FIGURE 1. Elements of the Experimental Refrigeration System
2. Refrigeration Load Model
3. Experimental Refrigeration System

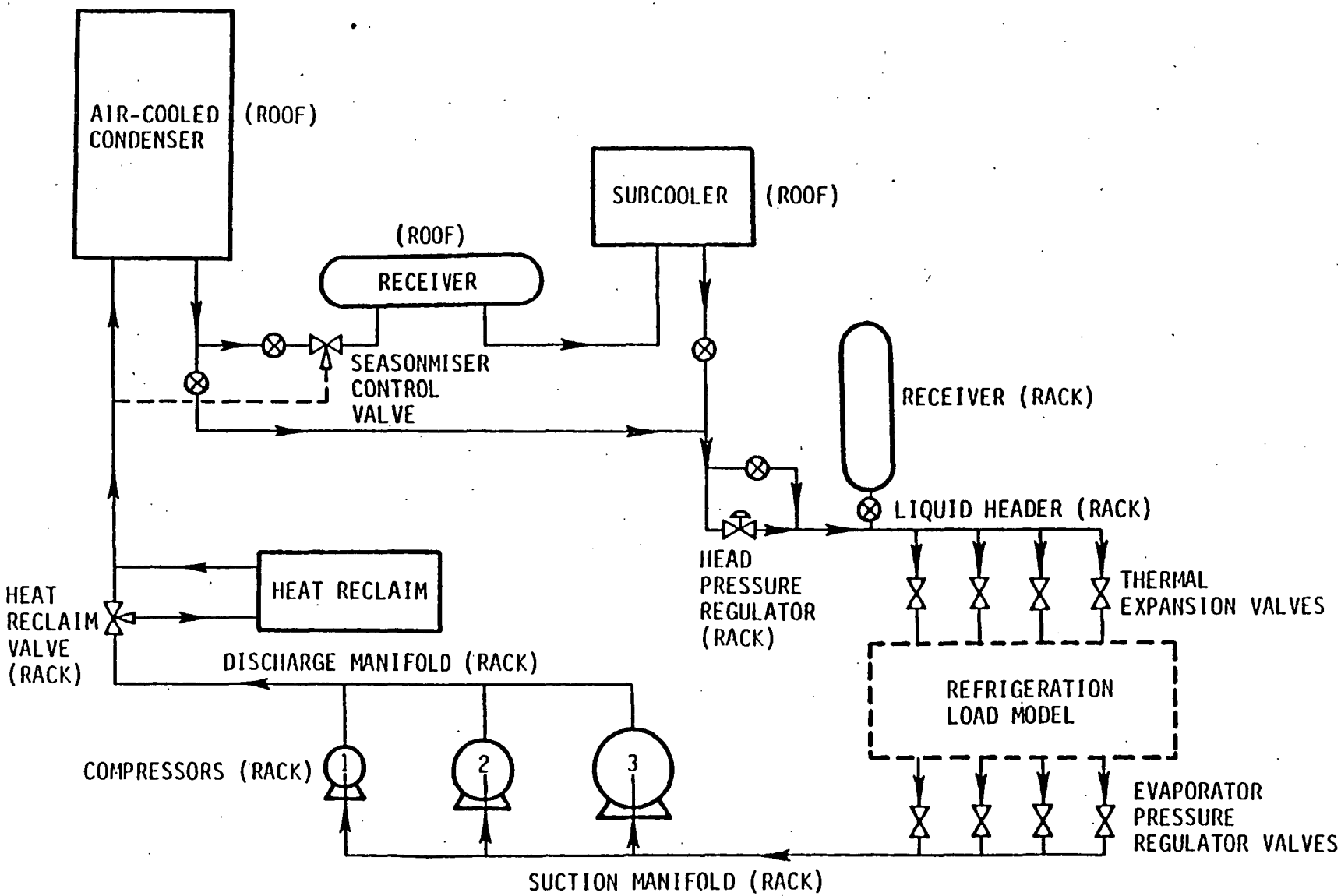

FIGURE 1. - Elements of the experimental refrigeration system.

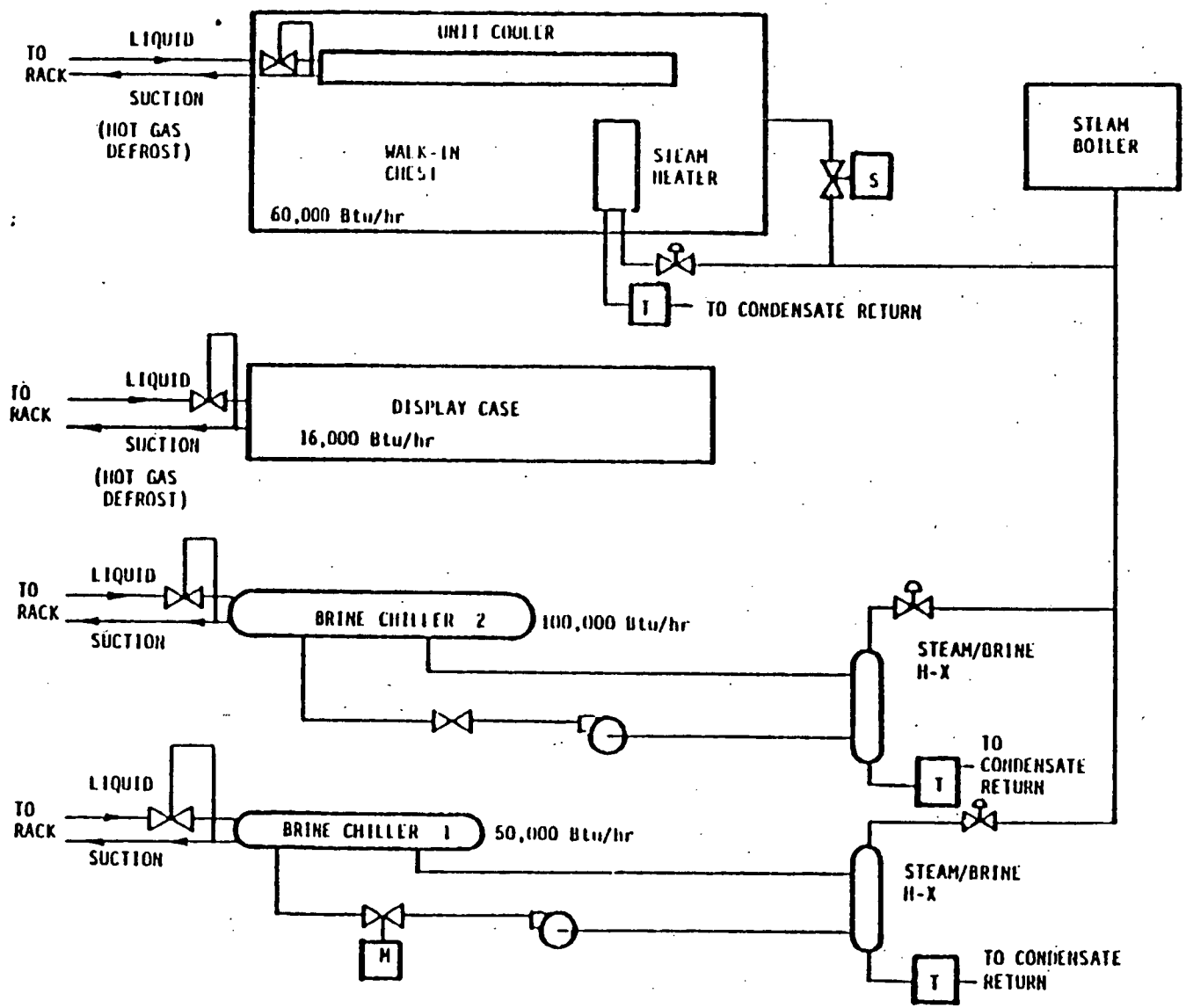

FIGURE 2. - Refrigeration load model.

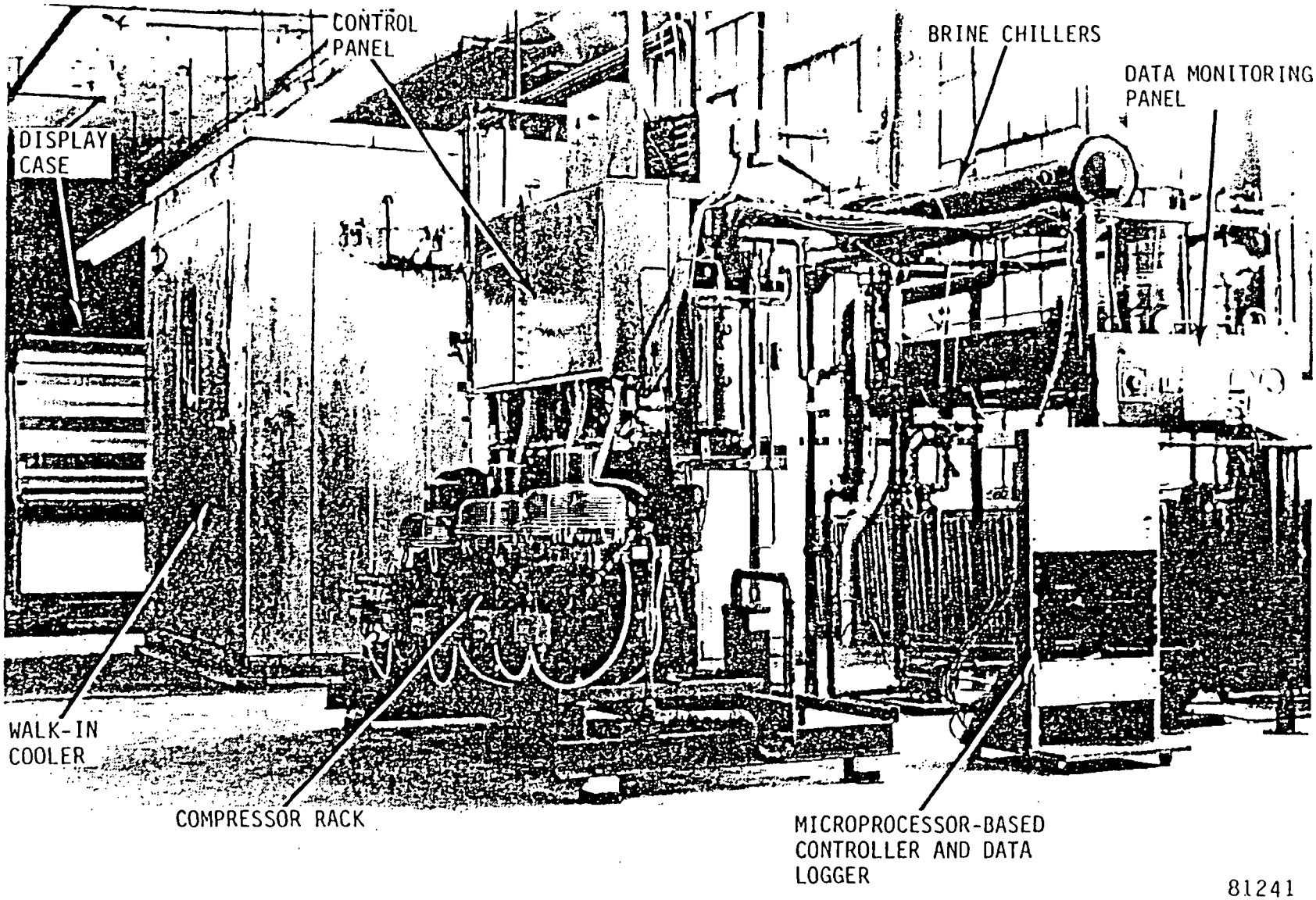

FIGURE 3. - Experimental refrigeration system.