ORNL/CON-10

Conservation
—
Division of Buildings
and
Community Systems

Energy and Cost Analysis of Residential Water Heaters

Robert A. Hoskins
Eric Hirst

OAK RIDGE NATIONAL LABORATORY
OPERATED BY UNION CARBIDE CORPORATION FOR THE ENERGY RESEARCH AND DEVELOPMENT ADMINISTRATION

ORNL/CON-10

Contract No. W-7405-eng-26

ENERGY DIVISION

ENERGY AND COST ANALYSIS OF RESIDENTIAL WATER HEATERS

Robert A. Hoskins

Eric Hirst

Date Published: June 1977

Research sponsored by the Federal Energy Administration
and the
Energy Research and Development Administration

OAK RIDGE NATIONAL LABORATORY
Oak Ridge, Tennessee 37830
operated by
UNION CARBIDE CORPORATION
for the
ENERGY RESEARCH AND DEVELOPMENT ADMINISTRATION

ENERGY AND COST ANALYSIS OF RESIDENTIAL WATER HEATERS

Robert A. Hoskins
Eric Hirst

ABSTRACT

A detailed computer model is developed to calculate energy flows for residential electric and gas water heaters. Model equations are derived from applications of the first law of thermodynamics, analysis of manufacturers' literature, and related studies. The model is used to evaluate the energy (and associated initial cost) impacts of alternative designs to reduce water heater fuel use.

Model results show that the largest heat loss in an electric water heater is conduction through jacket walls (14% of energy input). An additional 5% is lost through the distribution pipe for a 7.6 m (25 ft) long pipe. The remaining 81% of energy input is used to heat water. In a gas water heater, conduction losses through jacket and distribution pipe are 12% and 3%, respectively; and 33% is lost up the flue (due to main burner and pilot light operation). Only 52% of energy input to a gas water heater is used to heat water.

Several energy-saving design changes are examined using the energy model. Changes for both electric and gas water heaters are: increase jacket insulation thickness, reduce jacket insulation thermal conductivity, reduce thermostat setting, and add insulation to the distribution line. Application of all these changes to an electric water heater would reduce electricity use 17% and increase initial cost 27%. Additional changes examined for gas water heaters are: reduce pilot rate, eliminate pilot and add electric ignitor and flue closure, and reduce excess air for combustion by increasing flue baffling. Implementing all these changes to a gas water heater (except addition of electric ignitor) would reduce gas use 27% and increase initial cost 26%. These results show that there are large opportunities for reducing water heater energy use with only small initial cost increases.

CONTENTS

	Page
ABSTRACT	iii
1. INTRODUCTION	1
2. MARKET TRENDS	6
3. ENERGY MODEL	9
4. VALIDATION OF ENERGY MODEL	14
5. ENERGY-CONSERVING DESIGN OPTIONS	16
6. NATIONAL EFFECTS OF REDUCING WATER HEATER ENERGY USE	23
7. CONCLUSIONS	25
ACKNOWLEDGEMENTS	27
REFERENCES	28
APPENDICES	29
Appendix A: Nomenclature	29
Appendix B: Determination of flue loss	30
Appendix C: Sample calculations for a 0.19 m^3 (50 gal) electric and a 0.15 m^3 (40 gal) gas water heater	31
Appendix D: Energy-conserving options	37

1. INTRODUCTION

This report describes a computer model that determines energy flows in residential electric and gas water heaters, and evaluates energy and cost (both operation and purchase) impacts of alternative energy-conserving design changes. Outputs from these analyses are used as inputs to a detailed engineering-economic model of residential energy use developed at ORNL.[1] The energy use simulation model estimates distribution of new residential equipment each year (from 1970 through 2000) as functions of fuel prices, consumer demand functions, and technological characteristics of each type of equipment. The present study provides the relationships between operating energy requirement and initial cost for water heaters needed by the simulation model. The methodology used follows closely the work cited in ref. 2.

Table 1 shows the 1970 distribution of residential energy use* by fuel and end use.[1] Electric water heaters account for 6% of household fuel use and for 16% of residential electricity use. Gas water heaters account for 6% of household fuel use and for 17% of residential gas use. Thus, improvements in new water heaters can have significant long-term energy conservation effects.

Table 2 summarizes the energy impacts of design changes evaluated with our water heater model. Using more insulation with better thermal properties (item 2e) would reduce energy use of an electric water heater

---

*Table 1 shows electricity and gas in terms of their primary energy equivalents (29.7% efficiency for electricity, 100% efficiency for gas). All subsequent fuel use figures are in terms of end use energy.

Table 1. Household fuel use by fuel and end-use, 1970

	Electricity[a]	Gas	Oil	Other[b]	Total
	(10^{18} joules)				
Space heating	0.84	3.92	3.39	0.82	8.97 (56)[c]
Water heating	0.88	0.98	0.28	0.07	2.21 (14)
Refrigeration	0.91				0.91 (6)
Freezing	0.31				0.31 (2)
Cooking	0.39	0.32		0.03	0.74 (5)
Air conditioning	0.70				0.70 (4)
Other	1.62	0.45			2.07 (13)
Total	5.65	5.67	3.67	0.92	15.91
	(35)[c]	(36)	(23)	(6)	

[a]Electricity use figures are in terms of primary energy; that is, they include losses in generation, transmission, and distribution.

[b]Other fuels include coal and liquefied natural gases.

[c]Numbers in parentheses are percentages of the grand total, 15.9 x 10^{18} J.

11% and increase purchase price 17%. Making these changes to a gas water heater (item 2e) would reduce gas use 13% and increase purchase price 16%. Reduction of excess air for combustion and increase of flue baffling in gas water heaters (item 7) would reduce gas use 3% and increase purchase price less than 1%. These and the other results presented in Table 2 and Figs. 1 and 2 show large opportunities for reducing energy use in new water heaters.

Section 2 discusses historical trends in water heater sales, ownership, type, lifetime, and energy use. These data are used to define typical electric and gas water heaters for the energy model to evaluate energy use with various design changes.

Table 2. Water heater energy savings with various design changes

	0.19 m^3 (50 gal) Electric		0.15 m^3 (40 gal) Gas	
	% Energy Savings	% Cost Increase	% Energy Savings	% Cost Increase
1. Increase jacket insulation to				
a) 5.1 cm fiberglass			7	3
b) 7.6 cm fiberglass	4	4	10	6
c) 10.2 cm fiberglass	7	8	10	10
d) 12.7 cm fiberglass	7	12	11	14
2. Reduce jacket insulation thermal conductivity				
a) 2.5 cm urethane			9	4
b) 5.1 cm urethane	8	6	12	8
c) 7.6 cm urethane	10	11	13	10
d) 10.2 cm urethane	11	14	13	13
e) 12.7 cm urethane	11	17	13	16
3. Reduce thermostat setting 5.6°C	5	0	5	0
4. Add insulation to 7.6 m of distribution pipe				
a) 1.3 cm fiberglass	3	9	3	9
b) 2.5 cm fiberglass	3	10	3	9
5. Reduce pilot rate from 6.9 x 10^9 J/yr to 3.7 x 10^9 J/yr			6	0
6. Eliminate pilot — add electric ignitor and flue closure			12	84
7. Reduce excess air for combustion			3	1
8. 2d, 4b	14	24	16	23
9. 2e, 3, 4b	17	27	18	25
10. 2d, 4b, 5, 7			24	23
11. 2e, 3, 4b, 5, 7			27	26
Baseline	23.9 x 10^9 J/yr	$157	37.7 x 10^9 J/yr	$168

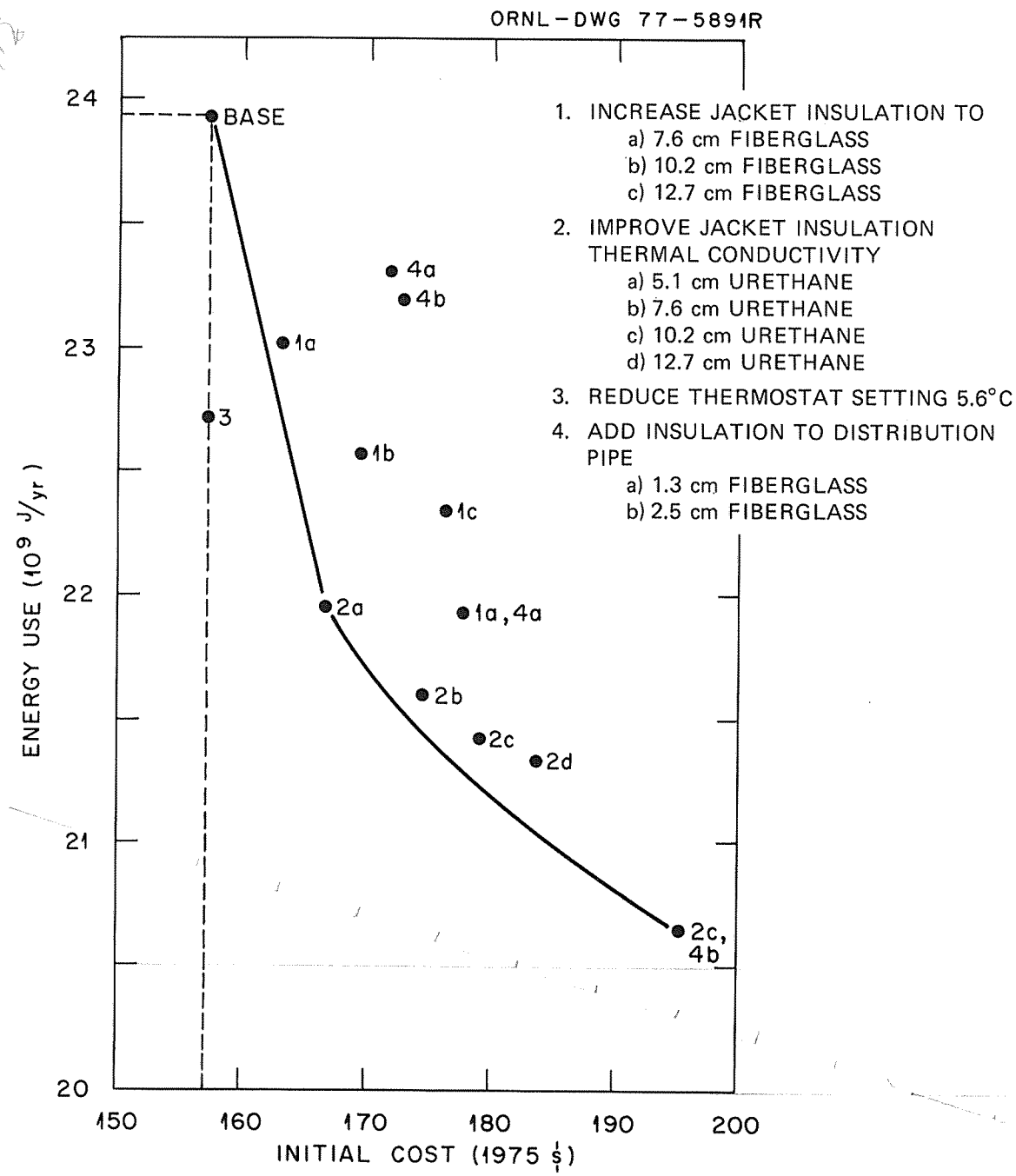

Fig. 1. Energy use vs retail price for various design changes for a 0.19 m^3 (50 gal) electric water heater.

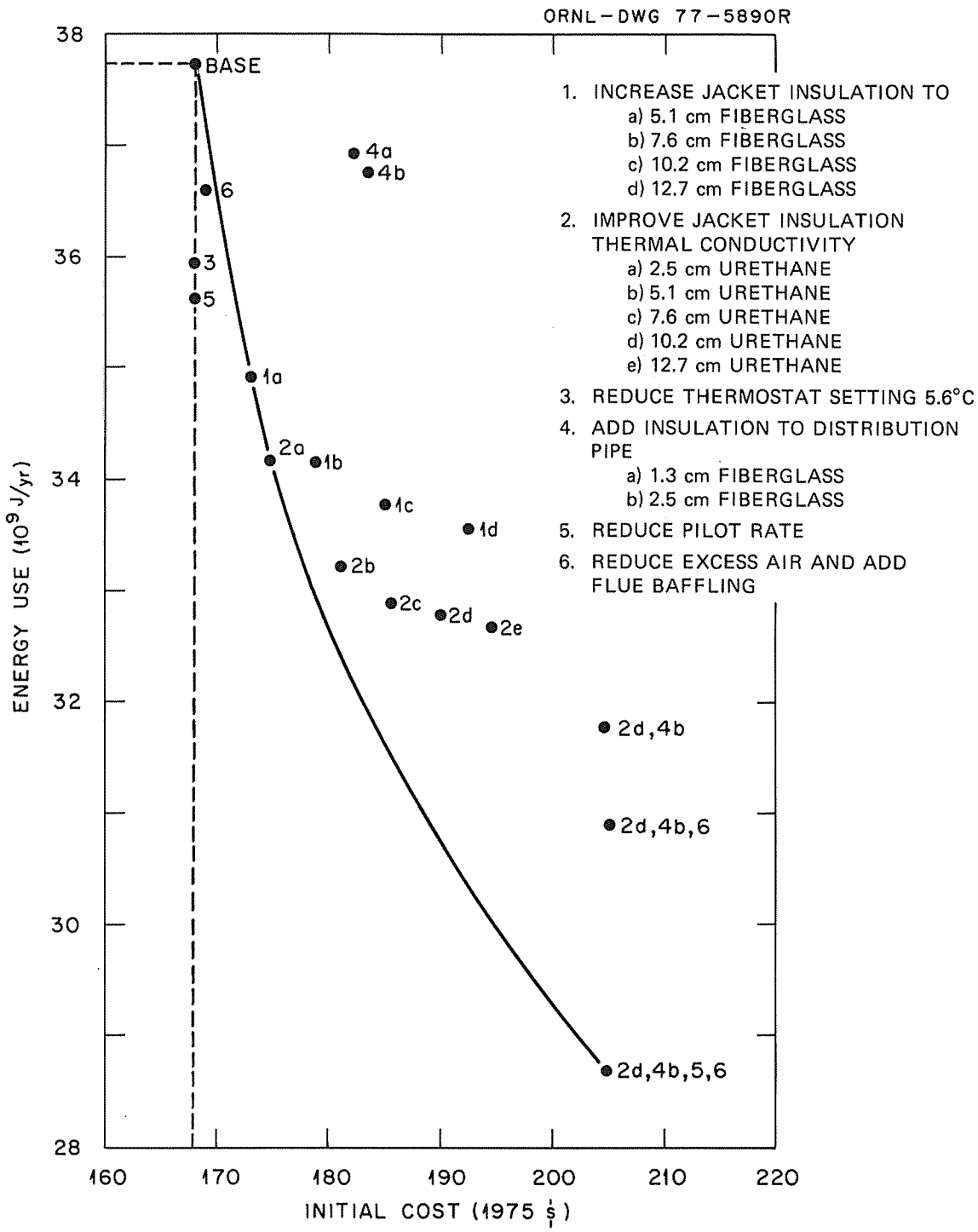

Fig. 2. Energy use vs retail price for various design changes for a 0.15 m^3 (40 gal) gas water heater.

Section 3 develops the energy model. The model evaluates heat losses from hot water due to conduction through jacket walls and distribution line; and for gas water heaters, losses due to main burner and pilot light inefficiencies. The model then determines total energy input required by water heaters as functions of the energy to heat water and each of the heat losses. Outputs from the model include all thermal loads, water heater efficiency, operating cost (based on average 1975 fuel prices*), and main burner run-time (for gas water heaters). Model predictions are compared with other estimates of water heater energy use in Section 4.

The model is used in Section 5 to evaluate the energy and initial cost impacts of several design changes to reduce electricity or gas use. Initial cost impacts are obtained from discussions with manufacturers and reviews of related studies. The national energy and economic effects of adopting these design changes are discussed in Section 6.

Section 7 summarizes the major features of the computer model and presents conclusions on alternative water heater designs, their cost effectiveness, and feasibility.

2. MARKET TRENDS

This section reviews data from the past several years on water heater ownership, purchases, initial price, lifetimes, and energy use. These data are used to define typical electric and gas water heaters analyzed later.

---

*1975 fuel prices are $\$8.90/10^9$ J (electricity) and $\$1.60/10^9$ J (gas).

Sales of gas water heaters have risen slightly over the past fifteen years, and sales of electric water heaters have risen sharply. In 1960, 2.5 times as many new gas water heaters as new electric water heaters were shipped. By 1975 shipments of gas and electric water heaters were approximately 2.6 and 2.2 million units/year respectively[3] (see Fig. 3).

Prices of new water heaters increased steadily during recent years when measured in terms of "real" dollars.* From 1960 to 1962 the price of water heaters dropped approximately 20%. Between 1962 and 1975, gas water heater prices rose from $125 to $168 and electric water heater prices rose from $131 to $157 (see Fig. 4).

Merchandising Week[3] lists manufacturers' retail prices for gas and electric water heaters. However, we found that these prices are much lower than those actually paid by consumers, based on our investigation of selling prices in the Knoxville, TN area and results presented in *Consumer Reports*.[4] We estimate that actual prices are higher than those reported in ref. 3 by 56% for gas and 59% for electric water heaters. 1975 prices of $168 (1975-$) for a typical 0.15 m^3 (40 gal) gas water heater and $157 for a typical 0.19 m^3 (50 gal) electric water heater are used as the basis for evaluating the design changes in Section 5.

Most of the life-cycle costs of owning and operating a water heater are due to energy use: approximately 76% for gas and 85% for electricity. These figures are based on a 7 year lifetime for water heaters.[5,6,7]

---

*Real or "constant" dollars correct for the effects of inflation.

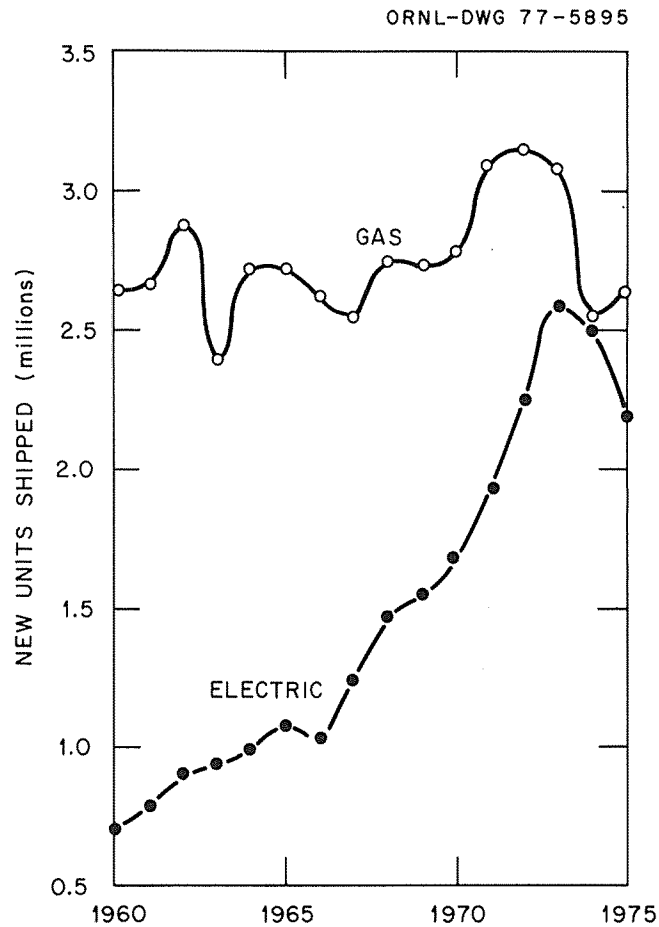

Fig. 3. Gas and electric water heater shipments, 1960-1975.

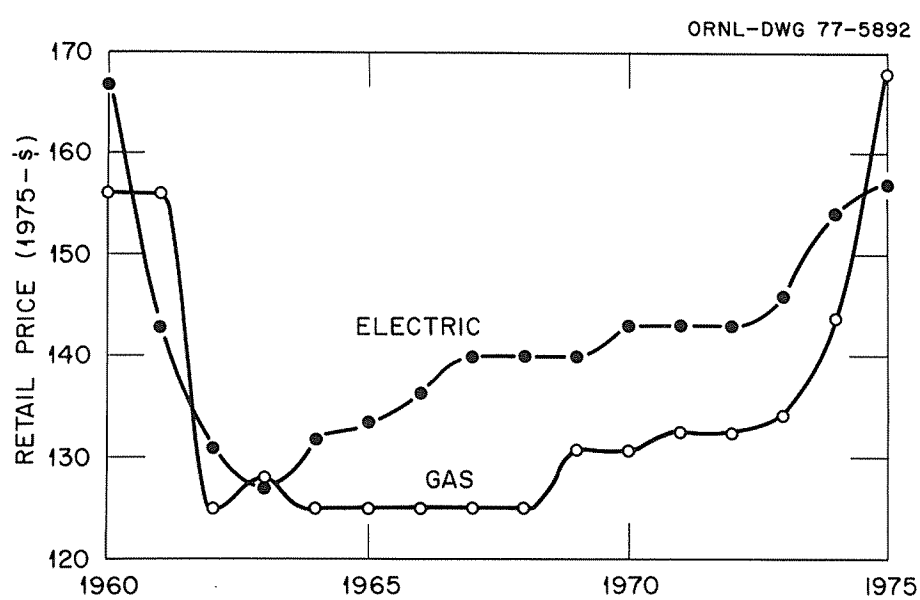

Fig. 4. Average retail price for new water heaters, 1960-1975.

Water heater energy use depends on fuel type and operating conditions such as water usage rate, and water temperature.* Table 3 shows several estimates of energy use for gas and electric water heaters.

Table 3. Water heater energy use estimates (10^9 J/m^3-day)

	Electric	Gas
Lee[8] (0.27 m^3/day)	0.240	0.398
Mutch[6] (0.19 m^3/day)	0.230	0.399
Spann[9] (0.28 m^3/day)	0.279	0.429
Consumer Reports[4] (0.38 m^3/day)	0.271	0.382
This report (0.27 m^3/day)	0.243	0.383

3. ENERGY MODEL

The control boundary considered consists of the water heater plus 7.6 m (25 ft) of hot water distribution pipe. Thus, the effect of heat lost to surrounding air on household air-conditioning and heating is not considered. Figures 5 and 6 show heat losses for electric and gas water heaters, respectively.

Electric Water Heater: The energy balance for an electric water heater is:

$$E_{in} = E_{water} + E_{\substack{jacket\\loss}} + E_{\substack{pipe\\loss}} \tag{1}$$

where E = energy flow, J/yr.

*A thermostat setting of 60°C (140°F) and daily water usage rate of 0.27 m^3/day (72 gal/day) are used here, based on estimates from refs. 4, 6, 8, 9 and personal communication with the National Bureau of Standards.

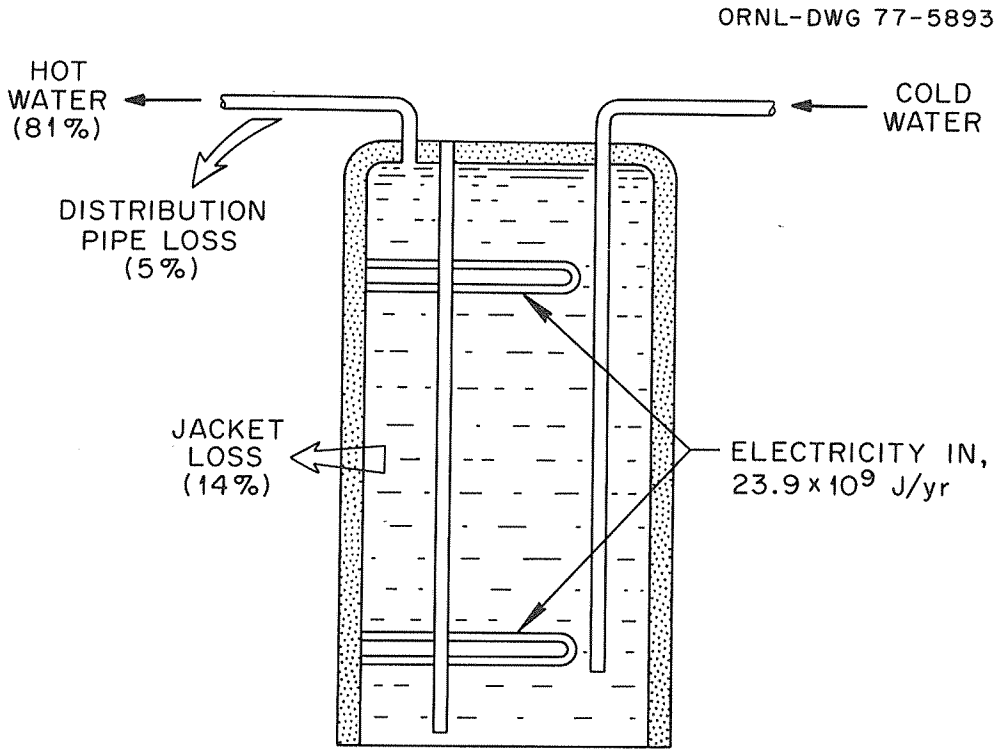

Fig. 5. Energy flows in a 0.19 m^3 (50 gal) electric water heater.

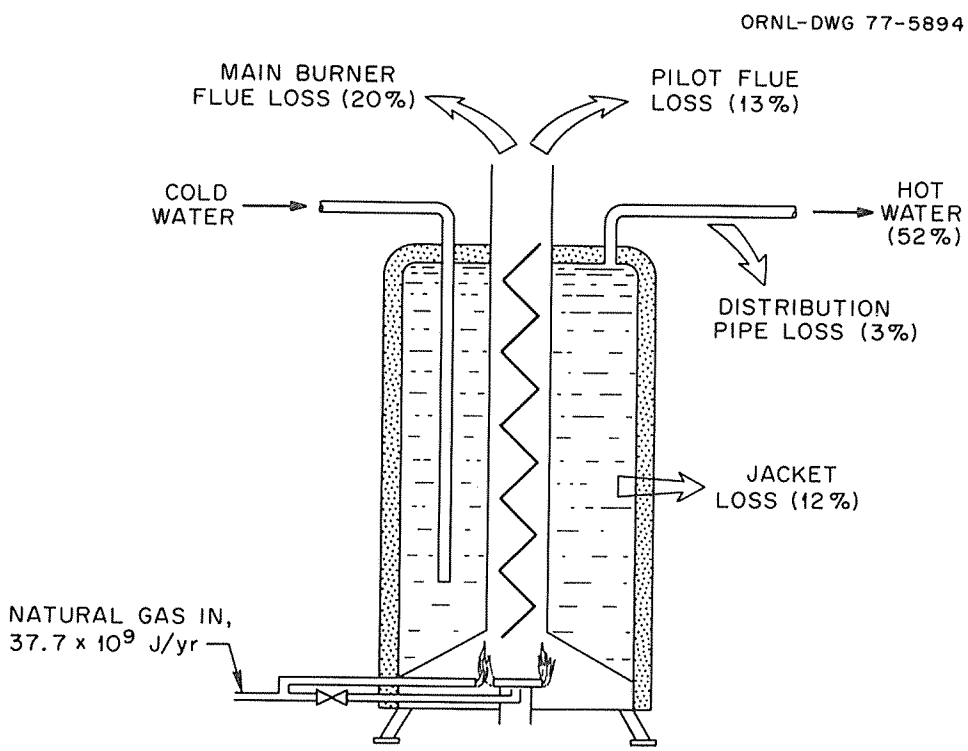

Fig. 6. Energy flows in a 0.15 m^3 (40 gal) gas water heater.

The water energy refers to the useful output (energy required to raise the inlet water temperature to the desired temperature):

$$E_{water} = \dot{m} \cdot c_p \cdot (T_w - T_{wi}) \cdot 365 \tag{2}$$

where

$\dot{m}$ = water use, m^3/day

c_p = specific heat of water, J/m^3-°C

T_w = temperature of hot water, °C

T_{wi} = inlet water temperature, °C

The water heater efficiency is:

$$\eta = E_{water} / E_{in} \tag{3}$$

The efficiency of a 0.19 m^3 (50 gal) electric water heater is 81% (see Appendix C).

Jacket loss is determined from the heat conduction equation:

$$E_{\substack{jacket \\ loss}} = U \cdot A \cdot (T_w - T_{amb}) \cdot 8760 \tag{4}$$

where

U = overall heat transfer coefficient, J/m^2-hr-°C

A = surface area of tank, m^2

T_{amb} = ambient temperature, °C

Most manufacturers provide electric water heaters with 5.1 cm (2 in.) of fiberglass insulation. Thus, jacket loss is 14% (see Fig. 5) of energy input.

The main loss of energy in the distribution pipe is due to cool down of water during periods of no water withdrawal:

$$E_{\substack{pipe\\loss}} = Q' \cdot L \cdot (T_w - T_{amb}) \tag{5}$$

where

Q' = annual heat loss per meter of pipe per °C, J/yr-m-°C

L = length of hot water line, m

Quinn[8] reports that for bare tarnished 1.3 cm (0.5 in.) copper pipe, an average family hot water usage schedule gives a transient heat loss of 3.7×10^6 J/yr-m-°C. Of the energy input to the average electric water heater, 5% (see Fig. 5) is lost through the distribution line (for $L = 7.6$ m).

<u>Gas Water Heater</u>: The energy balance for a gas water heater is:

$$E_{in} = E_{water} + E_{\substack{jacket\\loss}} + E_{\substack{pipe\\loss}} + E_{\substack{burner\\loss}} + E_{\substack{pilot\\loss}} \tag{6}$$

where E_{water}, $E_{\substack{jacket\\loss}}$, and $E_{\substack{pipe\\loss}}$ are found using equations (2), (4), and (5) respectively. $E_{\substack{burner\\loss}}$ and $E_{\substack{pilot\\loss}}$ represent the loss of heat out the flue. The pilot operates continuously; however, the main burner operates only when the thermostat detects a hot water temperature below

a specific temperature level. Therefore, flue loss and heat input are functions of main burner run-time.

Based on a main burner rate of 0.28×10^9 J/hr-m^3 (communications with several manufacturers), the main burner loss is:

$$E_{\substack{burner \\ loss}} = (0.28 \times 10^9) \cdot V \cdot t \cdot (1 - \eta_b) \tag{7}$$

where

V = volume of tank, m^3

t = hours per year of main burner operation

η_b = main burner efficiency

Based on experimental data, the main burner efficiency (η_b) is 75%[9] (see Appendix B).

Data from several manufacturers give a pilot rate between 0.74×10^6 and 0.82×10^6 J/hr. Assuming a pilot rate of 0.79×10^6 J/hr, the pilot loss is

$$E_{\substack{pilot \\ loss}} = (0.79 \times 10^6) \left[(1 - \eta_b)t + (1 - \eta_p)(8760 - t)\right] \tag{8}$$

where η_p = pilot efficiency. The pilot efficiency (percent of heat from the pilot which actually heats water) is 22%.[10]

The energy input to the water heater (E_{in}) is a function of main burner run-time and main burner and pilot rates:

$$E_{in} = (0.28 \times 10^9) \cdot V \cdot t + (0.79 \times 10^6) \cdot 8760 \qquad (9)$$

Substitution into (6) gives the main burner run-time, which for an average 0.15 m^3 (40 gal) gas water heater is 737 hr/yr.

The efficiency of the gas water heater is found from equation (3): 52% for a 0.15 m^3 water heater.

Computer outputs for the electric and gas reference water heaters are given in Appendix C.

4. VALIDATION OF ENERGY MODEL

Our model was used to simulate water heater size, type, and operating conditions for several studies, as shown in Tables 4 and 5.

Table 4. Comparison of energy model with related studies for electric water heaters

	Unit 1[a] (10^9 J/yr)		Unit 2[b] (10^9 J/yr)		Unit 3[c] (10^9 J/yr)	
	Model	Mutch	Model	Spann	Model	Lee
Useful energy	12.5	12.5	22.9	22.9	19.5	19.6
Jacket loss	3.4	3.4	3.8	6.0	4.3	4.1
Total input	15.9	15.9	26.7	28.9	23.8	23.7
Efficiency	78.8%	78.8%	85.8%	79.1%	82.0%	83.0%

[a] 0.19 m^3, hot water consumption 0.19 m^3/day, hot water temperature 60°C, inlet water temperature 12.8°C, ambient temperature 21.1°C, jacket insulation thickness 0.051 m.

[b] 0.19 m^3, hot water consumption 0.28 m^3/day, hot water temperature 65.6°C, inlet water temperature 12.8°C, ambient temperature 21.1°C, jacket insulation thickness 0.051 m.

[c] 0.20 m^3, hot water consumption 0.27 m^3/day, hot water temperature 62.8°C, inlet water temperature 15.6°C, ambient temperature 21.1°C, jacket insulation thickness 0.045 m.

Table 5. Comparison of energy model with related studies for gas water heaters

	Unit 1[a] (10^9 J/yr)		Unit 2[b] (10^9 J/yr)		Unit 3[c] (10^9 J/yr)	
	Model	Mutch	Model	Spann	Model	Lee
Useful energy	12.5	12.5	22.9	22.9	19.5	19.6
Jacket loss	4.4	9.6	4.9	7.0	6.8	4.8
Flue loss:						
main burner	6.5	3.3	10.0	8.3	9.5	8.9
pilot	5.2	2.1	5.0	6.3	4.8	5.9
Total input	28.6	27.5	42.8	44.5	40.6	39.2
Efficiency	43.7%	45.5%	53.5%	51.4%	48.0%	50.0%

[a] 0.15 m^3, hot water consumption 0.19 m^3/day, hot water temperature 60°C, inlet water temperature 12.8°C, ambient temperature 21.1°C, jacket insulation thickness 0.025 m, main burner rate 0.279 x 10^9 J/hr-m^3, pilot rate 7.913 x 10^6 J/hr.

[b] 0.15 m^3, hot water consumption 0.28 m^3/day, hot water temperature 60°C, inlet water temperature 12.8°C, ambient temperature 21.1°C, jacket insulation thickness 0.025 m, main burner rate 0.279 x 10^9 J/hr-m^3, pilot rate 7.913 x 10^6 J/hr.

[c] 0.15 m^3, hot water consumption 0.27 m^3/day, hot water temperature 62.8°C, inlet water temperature 19.6°C, ambient temperature 21.1°C, jacket insulation thickness 0.019 m, main burner rate 0.314 x 10^9 J/hr-m^3, pilot rate 7.385 x 10^6 J/hr (jacket loss in Lee estimate includes floor loss).

Predictions of water heater energy use computed with the energy model agree well with estimates from related studies.

Table 4 compares model results with those of Mutch,[6] Spann,[10] and Lee[9] for electric water heaters. The model matches Mutch's estimates exactly for all energy flows. Estimates of useful energy are essentially the same as the Spann and Lee results, but jacket loss estimates from the model are slightly higher than Spann's and slightly lower than Lee's.

Table 5 compares model results with those of Mutch, Spann, and Lee for gas water heaters. Again, the energy model estimates the same useful energy flows as each study. Jacket and flue losses predicted by the model are slightly different from the other studies, but the model estimates approach the averages of the various studies. Total input and efficiency estimates are in good agreement.

5. ENERGY-CONSERVING DESIGN OPTIONS

Several energy-conserving designs are evaluated with respect to both energy saved and changes in retail price for electric and gas water heaters (Appendix D). These options include: 1) increase jacket insulation thickness, 2) reduce jacket insulation thermal conductivity, 3) reduce thermostat setting, and 4) add insulation to the distribution pipe.

The efficiency of a gas water heater (52%) is lower than that of an electric water heater (81%) because of flue losses. Additional design changes investigated for gas water heaters include: 1) reduce pilot rate, 2) eliminate pilot, add electric ignitor and flue closure, and 3) reduce excess air for combustion (increase flue baffling). Figures 1 and 2 show energy use versus retail price for these design changes for a 0.19 m^3 (50 gal) electric water heater and a 0.15 m^3 (40 gal) gas water heater.*

Increase Jacket Insulation Thickness: One of the largest heat losses in both electric and gas waters heaters is through jacket walls.

---

*Other design changes for gas water heaters not included in this study due to lack of data include: 1) powered burner to increase main burner and pilot efficiencies, and 2) heat trap to reduce pilot losses during standby.

Electric water heaters generally have 5.1 cm (2 in.) of fiberglass jacket insulation; 14% of energy input to the water heater is lost through the jacket. Gas water heaters generally have only 2.5 cm (1 in.) of insulation; 12% of energy input is lost through the jacket. An increase in jacket insulation thickness will reduce this loss significantly. Energy savings are determined by substituting new values for the overall heat transfer coefficient and the tank surface area into equation (4), and then solving the energy equations. Table 6 shows the energy savings, added cost,[9] and payback period for increased insulation of electric and gas water heaters.*

The addition of jacket insulation is limited, because the water heater must remain narrow enough in its shipping carton to fit through the average doorway. Therefore, the insulation thickness should not exceed 10.2 cm. Table 6 shows that an increase in insulation thickness beyond 10.2 cm yields only slight energy savings.

Improve jacket insulation thermal conductivity: Foamed-in-place urethane provides better insulation than fiberglass because of its lower thermal conductivity ($k_{urethane}$ = 70.0 J/m-hr-°C, $k_{fiberglass}$ = 161.0 J/m-hr-°C).[11] Table 7 shows energy savings, added cost, and payback period for use of urethane foam as jacket insulation.†

---

*Insulation can also be added to existing units. Commercially available insulation kits that cost $16 provide 3.8 cm (1.5 in.) of vinyl-backed fiberglass insulation for the top and sides of the water heater,[9] and can reduce energy use 5% for electric and gas water heaters.

†As urethane ages, its conductivity will increase because freon in the insulation will gradually escape. Also, urethane may cause safety problems because of its flammability and may corrode unless specially treated.

Table 6. Energy and economic effects of increased jacket insulation thickness

Insulation thickness (cm)	Electric			Gas		
	Energy savings	Added cost (1975-$)	Payback period[a] (yr)	Energy savings	Added cost (1975-$)	Payback period[a] (yr)
5.1	...	...	...	7%	4.9	1.1
7.6	4%	6.1	0.7	10%	10.9	1.9
10.2	7%	12.1	1.0	10%	17.0	2.7
12.7	7%	19.4	1.4	11%	24.2	3.6

[a]Based on 1975 fuel prices.

Table 7. Energy and economic effects of reduced jacket insulation thermal conductivity (urethane foam)

Insulation thickness (cm)	Electric			Gas		
	Energy savings	Added cost (1975-$)	Payback period (yr)	Energy savings	Added cost (1975-$)	Payback period (yr)
2.5	...	...	...	9%	6.8	1.2
5.1	8%	9.5	0.5	12%	13.0	1.8
7.6	10%	17.5	0.8	13%	17.5	2.3
10.2	11%	22.0	1.0	13%	22.0	2.8
12.7	11%	26.5	1.1	13%	26.5	3.3

Another alternative for reducing thermal conductivity is installation of "double density" fiberglass with k = 98.6 J/m-hr-°C.[10] While this provides an improvement in energy savings over single density fiberglass, it is not as effective as urethane foam. From a cost perspective, double density fiberglass and urethane foam are approximately equal.

Reduce thermostat setting: A thermostat setback from 60 to 54.4°C (10°F reduction) is an effective design option because: (1) substantial energy savings for both electric and gas water heaters are possible,

(2) the thermostat is easily adjusted, and (3) no additional cost is incurred to either the homeowner or the manufacturer (assuming tank volume remains unchanged).

Energy savings for electric and gas water heaters are estimated assuming that the quantity of hot water consumed per day is a function of water temperature. A constant volume is required for some hot water uses regardless of temperature (dishwashers and clothes washers) and constant energy (joule) is required for others (showers, baths, personal use). Assuming that 25% of hot water demand is for fixed volume and 75% for fixed energy,[9] energy savings are calculated by lowering the temperature of hot water T_w, and increasing water use $\dot{m}$:

$$\dot{m}_{new} = 0.25\ \dot{m}_{old} + 0.75\ \dot{m}'$$

where

$$\dot{m}' = E_{\substack{water \\ old}} \Big/ \left[c_p\ (T_{\substack{w \\ new}} - T_{wi})\ 365 \right]$$

From equations (2) and (4), energy required to heat the water and energy lost through jacket walls will decrease. This lowers energy input to the water heater. A reduction of 5.6°C (10°F) will decrease energy consumption for electric and gas water heaters 5%. A reduction of 11.2°C (20°F) cuts energy use 10% and 9% respectively.*

---

*Families with large hot water demands might need a larger water heater to compensate for reduced water temperatures. This would increase water heater costs about $20 for a 5.6°C reduction. Also, lower water temperature may cause problems with automatic dishwasher use related to bacteria, cleanliness, and spotting.

Add insulation to distribution line: Heat lost through the hot water distribution line during periods of no water withdrawal can be reduced by adding fiberglass pipe insulation. The insulation is easy to install, so labor costs are low. Insulation dealers carry pipe insulation, which comes in preformed lengths with a protective exterior jacket and water barrier.

The transient heat loss through the distribution pipe (bare tarnished 1.3 cm copper pipe) is 3.68×10^6 J/yr-m-°C, based on an average family water usage schedule given by Quinn.[8] ASHRAE[11] states that the steady-state heat loss through this pipe is 14.81×10^6 J/yr-m-°C, so an appropriate transient-to-steady-state adjustment factor is obtained and the transient heat losses with 1.3 and 2.5 cm fiberglass are determined (see Table 8). Values for the steady-state heat loss for added insulation were obtained from Brennon Insulation Co. of Knoxville, TN.

The energy savings due to added insulation are determined from equation (5), in which the new value of Q' is substituted from Table 8. For either an electric or gas water heater, addition of 1.3 or 2.5 cm of fiberglass insulation will save 3% of the energy input. The cost of the 1.3 cm insulation is $1.42/m (1975-$), based on communication with several insulation retail outlets, so the cost to insulate 7.6 m is $10.8 plus $3.5 labor. The 2.5 cm insulation retails for $1.62/m, so insulation for 7.6 m of distribution line is $12.3 plus $3.5 labor (see Table 9).

Table 8. Heat loss through tarnished 1.3 cm distribution pipe

	Steady-State	Transient (Q')
	(10^6 J/yr-m-°C)	
Bare pipe	14.81	3.68
Pipe with 1.3 cm fiberglass	6.24	1.55
Pipe with 2.5 cm fiberglass	4.68	1.16

Table 9. Energy and economic savings from added fiberglass pipe insulation to 7.6 m distribution line

		Electric		Gas	
Fiberglass insulation (cm)	Added cost (1975-$)	Energy savings	Payback period (yr)	Energy savings	Payback period (yr)
1.3	14.3	3%	2.5	3%	10.8
2.5	15.8	3%	2.4	3%	10.0

Reduce pilot rate: The pilot light in a gas water heater operates continuously and serves as a heat source to tank water and an ignitor for the main burner. However, when the main burner is off, only 22% of the pilot energy heats water;[9] the remainder escapes up the flue. The energy lost by the pilot is decreased if the pilot rate is reduced. This is accomplished by reducing the pilot orifice area.

Reduction of pilot rate is limited by the instability of pilot flames which are too small, since drafts or gas supply pressure changes could extinguish them. A minimum pilot rate of 3.7×10^9 J/yr is recommended by a leading manufacturer based on their experimental data. Substituting this new pilot rate into equation (8) and solving for the pilot loss and total energy input yields an energy saving of 6%. No change in retail price occurs from this design change.

Eliminate pilot--add electric ignitor and flue closure: Flue losses during standby for a gas water heater account for 13% of energy input. If an electric ignitor is used in place of the pilot and no damper is used, flue losses from the pilot are eliminated, but the tank hot water will continue to lose heat to the cooler gases in the flue, which then flow up the stack. Thus, the energy saved by merely replacing the pilot with an electric ignitor is negligible.

When an electric ignitor and automatic damper are installed together, the flue loss is eliminated because the damper prevents hot air from escaping during standby.

When the temperature of the water drops below a certain level, the automatic damper opens and the electric ignitor ignites the main burner. Should the damper fail to open upon ignition of the main burner, combustion gases (including CO) would leak into the house. A detection device or sensor should be installed to assure damper opening before the main burner is ignited.

Energy savings for electric ignitor and flue damper are determined by assuming a pilot rate of 0.0 J/yr in equations (8) and (9). Solving equation (6) for the new energy input shows a saving of 12%. Lee[9] estimates an increase in retail cost of $101 for parts and $40 for installation for an automatic ignition with flue closure. This nearly doubles the retail cost of the water heater, and results in a 19.6 year payback period. Because the payback period is so long, this is not a cost-effective design change.

Reduce excess air for combustion (increase flue baffling): The loss of heat up the flue of a gas water heater is proportional to the amount

of excess air for combustion, because this air is heated during combustion and then escapes up the stack. By restricting air flow in the flue, the amount of excess air is reduced and the flue gas exit temperature drops. This is achieved by increasing flue baffling or repositioning the baffling in a manner that hinders air flow. The amount of baffling that can be added to the flue is limited, because too much air flow restriction would eliminate the pressure difference (necessary for natural draft) between entering air and exiting gas, and combustion gases would leak into the surrounding air. For a 244°C (440°F) temperature difference* between flue exit and ambient temperature, and a 50% excess air rate, the percent of energy lost up the flue is 23% (see Appendix B). Substituting $(1 - \eta_b) = 0.23$ into equations (7) and (8) and solving equation (6) for the new energy input, indicates a savings of 3%. The added cost of increased flue baffling is $1.15.[9] The payback period is 0.6 year.

6. NATIONAL EFFECTS OF REDUCING WATER HEATER ENERGY USE

We used the ORNL residential energy use simulation model[1] to evaluate the effects on national energy use and household economics of adopting combinations of water heater design options discussed in the preceding section.

We ran three cases with the simulation model. In the first, we assumed that water heater energy use per unit remained constant through-

*This represents a 22°C (40°F) lower temperature difference than baseline temperature difference (baseline flue gas temperature = 288°C, ambient temperature = 21°C).

out the forecast period (1980-2000). In the second case, we assumed step reductions in water heater energy use in 1980 of 11% for electric and 13% for gas units (item 2d from Table 2). In the third case, we assumed greater reductions in 1980: 17% for electric and 27% for gas units (item 9 for electric and item 11 for gas units from Table 2).

Model results, summarized in Table 10, show that both sets of design options save energy for the nation and save money for households. Reducing unit energy use by 11% for electric and 13% for gas saves a total of 3.1 x 10^{18} joules between 1980 and 2000. The present worth of the net economic benefits to households is $1.0 billion (discounted to 1977 at a real interest rate of 10%).

Table 10. Cumulative (1980-2000) effects of reducing water heater energy use[a]

	Low	High
Energy savings (10^{18} joules)		
Electricity	1.7	6.2
Gas	1.2	1.0
Oil	0.2	0.4
Total	3.1	7.6
Present worth of cost savings at 10% real interest rate (10^9 1975-$)		
Fuels	2.6	6.6
Equipment	-1.6	-2.7
Total	1.0	3.9

[a]The low improvements are 11% for electric and 13% for gas water heaters. The high improvements are 17% for electric and 27% for gas water heaters; see Table 2.

Reducing water heater energy use further (case 3) increases both the energy and economic benefits. The cumulative energy savings increase to 7.6×10^{18} joules and the economic benefits increase to $3.9 billion.

The ratio of economic benefits (reduced fuel bills) to economic costs (higher equipment costs) for both sets of improvements is greater than 1.0. For the 11%/13% changes, the ratio is 1.6; for the 17%/27% changes, the ratio is 2.4. It appears likely that additional improvements in water heater performance would yield even larger energy and economic benefits than those discussed here.

These results show that improvements in water heater performance can yield large energy and economic benefits to the nation.

7. CONCLUSIONS

The model developed here provides a detailed picture of energy flows in residential gas and electric water heaters. The model is sufficiently flexible to handle different sizes, types (gas or electric), and operating environments (e.g., room temperature, water temperature, water usage rate). The model's estimates of energy use are in good agreement with those from related studies.

The primary purpose in developing this model is to evaluate the energy (and related cost) impacts of alternative water heater designs. A 5.6°C (10°F) reduction in thermostat setting is one of the most effective energy saving options, reducing fuel use 5% with no increase in purchase price.

The largest heat loss in an electric water heater is conduction through jacket walls. Changing from fiberglass to urethane foam insulation reduces this heat loss and cuts energy use 11% while increasing purchase price 14%. Energy use for a gas water heater can be reduced 13% with an increase in purchase price of 10%. Payback periods for electric and gas water heaters are 1.0 and 2.3 years, respectively.

Adding insulation to the distribution line reduces heat loss during periods of no water withdrawal. Energy use for electric and gas water heaters can be cut 3%. Payback periods are 2.4 and 10.0 years, respectively.

The main heat loss in gas water heaters is up the flue. Reduction of pilot rate by reducing the pilot orifice area is an effective design change; gas use is reduced 6% and purchase price remains unchanged.

The largest energy saving change to gas water heaters is elimination of the pilot light and addition of an electric ignitor and flue closure. This would eliminate flue losses during standby and reduce gas use 12%. However, the large cost of parts and installation make this design change uneconomical at present gas prices.

Reducing excess air for combusion and increasing flue baffling in gas water heaters reduces gas use 2%. The change in purchase price would be less than 1%. The payback period is 0.6 year.

Total savings anticipated from all the options discussed for an electric water heater would be 17% and for a gas water heater (excluding addition of electric ignitor) 27%. Retail prices would increase 27% and 26%, respectively. Figures 1 and 2 and Table 2 show changes in retail price resulting from various design changes as a function of energy use.

ACKNOWLEDGEMENTS

We thank Roger Carlsmith, Peter Cowling, Stephen Dole, Eugene Hise, Charles Howard, William S. Johnson, Esher Kweller, Melvin Meyerson, and William Walsh for their careful reviews of this report. We thank Ethel Cagle for typing this report.

REFERENCES

1. E. Hirst et al., *An Improved Engineering-Economic Model of Residential Energy Use*, Oak Ridge National Laboratory, ORNL/CON-8, March 1977; also, E. Hirst, W. Lin, and J. Cope, *An Engineering-Economic Model of Residential Energy Use*, Oak Ridge National Laboratory, ORNL/TM-5470, July 1976.

2. J. P. D'Acierno, R. J. Bertolami, and E. I. Chao, *Energy Consumption in Residential Gas and Electric Water Heaters and Ranges*, Oak Ridge National Laboratory, ORNL/MIT-226, February 25, 1976.

3. "1975 Statistical and Marketing Report," *Merchandising Week*, February 24, 1975 (and earlier annual statistical issues).

4. "Water Heaters: Gas and Electric," *Consumer Reports*, March 1976.

5. S. H. Dole, *Energy Use and Conservation in the Residential Sector: A Regional Analysis*, Rand Corporation R-1641-NSF, June 1975.

6. J. J. Mutch, *Residential Water Heating: Fuel Conservation, Economics, and Public Policy*, Rand Corporation, R-1498-NSF, May 1974.

7. R. A. Raynor, *Appliance Efficiency Program--Water Heaters, Clothes Washers, Clothes Dryers*, R. A. Ransom Company, Inc., July 15, 1976.

8. R. S. Quinn, *The Effect of Increased Capital Expenditures as a Method of Reducing Electricity Demand for Hot Water Generation in a Home*, Sc. M. Thesis, University of Tennessee, 1972.

9. W. D. Lee, *Study of Energy-Saving Options for Refrigerators and Water Heaters*, draft, Arthur D. Little, Inc., May 1976.

10. D. E. Spann and G. G. Slaughter, *An Efficiency Evaluation and Consumer Economic Analysis of Domestic Water Heaters*, Oak Ridge National Laboratory, forthcoming.

11. *ASHRAE Handbook of Fundamentals*, American Society of Heating Refrigerating and Air-Conditioning Engineers, Inc., 1972.

APPENDIX A: Nomenclature

A = outside surface area of tank, m^2

c_p = specific heat of water, J/m^3-°C

E = energy flow, J/yr

EA = excess air in flue gases, %

FL = flue losses, %

k = thermal conductivity, J/m-hr-°C

L = length of hot water distribution line, m

$\dot{m}$ = water use, m^3/day

Q' = annual heat loss per meter of tubing per °C, J/yr-m-°C

T = temperature, °C

t = main burner run-time, hr/yr

U = overall heat transfer coefficient, J/hr-m^2-°C

V = volume of tank, m^3

Δx = insulation thickness, m

η = efficiency

subscripts:

amb = ambient

b = main burner

p = pilot

w = hot water

wi = inlet water

APPENDIX B: Determination of flue loss

The American Gas Association developed a nomograph for determining flue loss as a function of percent excess air in flue gases and temperature difference between flue gases and ambient air (see Fig. B.1).[9] This relationship is expressed empirically as:

$$FL = 1.29\ EA^{0.147}\ T^{0.419}$$

where

T = temperature difference between flue gases and ambient air, °C.

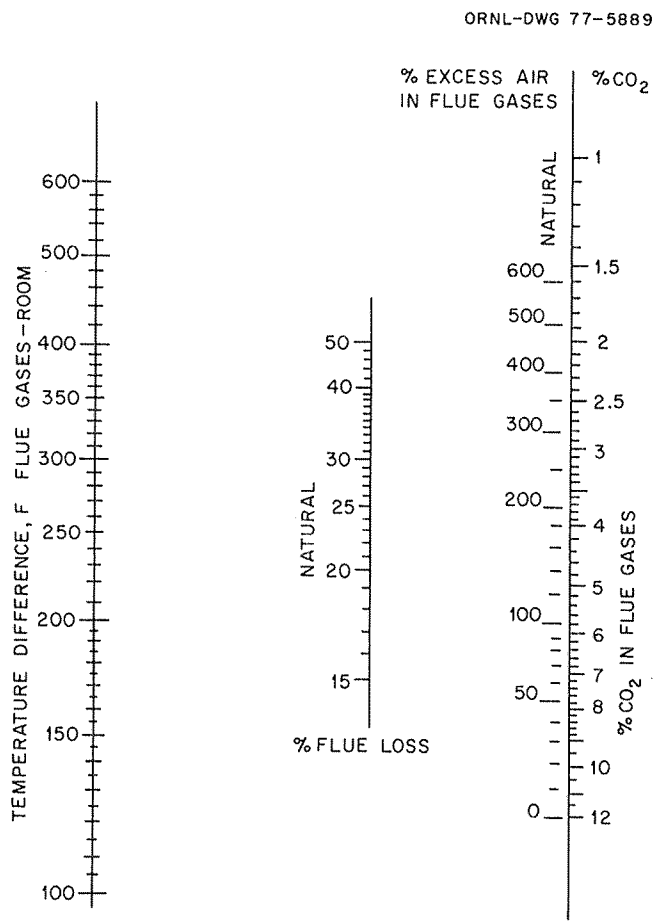

Fig. B.1. Flue loss as function of excess air and temperature.

APPENDIX C: Sample calculations for a 0.19 m^3 (50 gal) electric and a 0.15 m^3 (40 gal) gas water heater

Electric Water Heater

Input values:

$V = 0.19\ m^3$

$\dot{m} = 0.27\ m^3/day$

$c_p = 4.19 \times 10^6\ J/m^3\text{-}°C$

$T_w = 60°C$

$T_{wi} = 12.8°C$

$T_{amb} = 21.1°C$

$Q' = 3.68 \times 10^6\ J/m\text{-}yr\text{-}°C$

$L = 7.62\ m$

$A = 2.81\ m^2$

$\Delta x = 0.0508\ m$

$k = 161.0\ J/m\text{-}hr\text{-}°C$

$U = 3513.3\ J/m^2\text{-}hr\text{-}°C$

1. Energy required to heat water:

$$E_{water} = \dot{m}\ c_p\ (T_w - T_{wi})\ 365$$

$$= (0.27\ m^3/day)(4.19 \times 10^6\ J/m^3\text{-}°C)(60 - 12.8)°C\ 365\ days/yr$$

$$= 19.49 \times 10^9\ J/yr$$

2. Energy lost through jacket:

$$E_{\substack{jacket\\loss}} = UA\ (T_w - T_{amb})\ 8760$$

$$= (3513.3\ J/m^2\text{-}hr\text{-}°C)(2.81\ m^2)(60 - 21.1)°C\ (8760\ hr/yr)$$

$$= 3.36 \times 10^9\ J/yr$$

3. Energy lost through distribution pipe:

$$E_{\substack{pipe\\loss}} = Q'\ L\ (T_w - T_{amb})$$

$$= (3.68 \times 10^6\ J/m\text{-}yr\text{-}°C)(7.62\ m)(60 - 21.1)°C$$

$$= 1.09 \times 10^9\ J/yr$$

4. Total energy input:

$$E_{in} = E_{water} + E_{\substack{jacket\\loss}} + E_{\substack{pipe\\loss}}$$

$$= (19.49 + 3.36 + 1.09) \times 10^9\ J/yr$$

$$= 23.9 \times 10^9\ J/yr$$

5. Efficiency:

$$\eta = E_{water}/E_{in} \times 100$$

$$= (19.49 \times 10^9/23.9 \times 10^9) \times 100 = 81\%$$

Gas Water Heater

Input values:

$V = 0.15\ m^3$

$A = 1.623\ m^2$

$\Delta x = 0.0254\ m$

$U = 7882.5\ J/m^2\text{-hr-}°C$

$\eta_b = 75\%$

$\eta_p = 22\%$

$\dot{m}$, c_p, T_w, T_{wi}, T_{amb}, Q', L, and k are same as for electric water heater.

1. From electric water heater calculations (above):

$E_{water} = 19.49 \times 10^9\ J/yr$

$E_{\substack{pipe\\loss}} = 1.09 \times 10^9\ J/yr$

2. Energy lost through jacket:

$$E_{\substack{jacket\\loss}} = UA\ (T_w - T_{amb})\ 8760$$

$$= (7882.5\ J/m^2\text{-hr-}°C)(1.623\ m^2)(60 - 21.1)°C\ (8760\ hr/yr)$$

$$= 4.36 \times 10^9\ J/yr$$

3. Remaining energy terms are functions of main burner on-time, t:

$$E_{in} = E_{water} + E_{\substack{jacket\\loss}} + E_{\substack{pipe\\loss}} + E_{\substack{burner\\loss}} + E_{\substack{pilot\\loss}}$$

$$(2.787 \times 10^8)\ (0.15)t + 6.9 \times 10^9 = (19.49 + 4.36 + 1.09) \times 10^9$$

$$+ (2.787 \times 10^8)\ (0.15)t\ (1 - 0.75)$$

$$+ (7.9 \times 10^5)\ [(1 - 0.75)t + (1 - 0.22)\ (8760 - t)]$$

$$t = 737 \text{ hr/yr}$$

4. Energy lost up flue:

$$E_{\substack{burner\\loss}} = (2.787 \times 10^8)\ Vt\ (1 - \eta_b)$$

$$= (2.787 \times 10^8 \text{ J/hr-m}^3)\ (0.15 \text{ m}^3)\ (737 \text{ hr/yr})\ (1 - 0.75)$$

$$= 7.70 \times 10^9 \text{ J/yr}$$

$$E_{\substack{pilot\\loss}} = (7.913 \times 10^5)\ (1 - \eta_b)t + (1 - \eta_p)\ (8760 - t)$$

$$= (7.913 \times 10^5 \text{J/hr})\ [(1 - 0.75)\ (737 \text{ hr/yr})$$

$$+ (1 - 0.22)\ (8760 - 737) \text{ hr/yr}]$$

$$= 5.10 \times 10^9 \text{ J/yr}$$

5. Total energy input:

$$E_{in} = (2.787 \times 10^8)\ Vt + 6.9 \times 10^9$$

$$= (2.787 \times 10^8 \text{ J/hr-m}^3)\ (0.15 \text{ m}^3)\ (737 \text{ hr/yr}) + 6.9 \times 10^9 \text{ J/yr}$$

$$= 37.7 \times 10^9 \text{ J/yr}$$

6. Efficiency:

$$\eta = E_{water}/E_{in} \times 100$$

$$= (19.49 \times 10^9 \text{ J/yr}/37.7 \times 10^9 \text{ J/yr}) \times 100 = 52\%$$

ENERGY CONSUMPTION OF A 0.19 CU M ELECTRIC WATER HEATER

	TANK WATER	INLET WATER	AMBIENT
TEMPERATURE	60.0	12.8	21.1

LENGTH OF DISTRIBUTION PIPE = 7.62 M
THICKNESS OF FIBERGLASS INSULATION AROUND DISTRIBUTION LINE = 0.0000 M
SURFACE AREA = 2.81 SQ M
JACKET INSULATION THICKNESS = 0.0508 M
JACKET INSULATION THERMAL CONDUCTIVITY = 161.0 J/M-HR-C

TABLE C.1

ENERGY	JOULE/YEAR (BILLION)
TO HEAT WATER	19.490
LOST THROUGH JACKET WALLS	3.366
LOST THROUGH DISTRIBUTION PIPE	1.091
TOTAL INPUT	23.947

WATER HEATER EFFICIENCY = 81.4%

OPERATING COST = $213.13/YEAR

ENERGY CONSUMPTION OF A 0.15 CU M GAS WATER HEATER

	TANK WATER	INLET WATER	AMBIENT
TEMPERATURE	60.0	12.8	21.1

LENGTH OF DISTRIBUTION PIPE = 7.62 M
THICKNESS OF FIBERGLASS INSULATION AROUND DISTRIBUTION LINE = 0.0000 M
SURFACE AREA = 1.62 SQ M
JACKET INSULATION THICKNESS = 0.0254 M
JACKET INSULATION THERMAL CONDUCTIVITY = 161.0 J/M-HR-C

MAIN BURNER RATE = 278700000.0 J/HR-CU M
PILOT RATE = 791300.0 J/HR
MAIN BURNER EFFICIENCY = 75.0%
PILOT EFFICIENCY (DURING STANDBY) = 22.0%
BURNER ON-TIME = 737.0 HOURS/YEAR

TABLE C.2

ENERGY		JOULE/YEAR (BILLION)
TO HEAT WATER		19.490
LOST THROUGH JACKET WALLS		4.360
LOST THROUGH DISTRIBUTION PIPE		1.091
FLUE LOSS	A) MAIN BURNER	7.702
	B) PILOT	5.098
TOTAL INPUT		37.740

WATER HEATER EFFICIENCY = 51.6%

OPERATING COST = $60.38/YEAR

APPENDIX D: Energy-conserving options

ELECTRIC WATER HEATER:

ENERGY SAVING OPTION
* INCREASE JACKET INSULATION THICKNESS

ENERGY SAVINGS = 0.929 (BILLION) JOULES/YEAR

JACKET INSULATION THICKNESS = 0.0762 M
JACKET INSULATION THERMAL CONDUCTIVITY = 161.0 J/M-HR-C

TABLE D.1

ENERGY	JOULE/YEAR (BILLION)
TO HEAT WATER	19.490
LOST THROUGH JACKET WALLS	2.438
LOST THROUGH DISTRIBUTION PIPE	1.091
TOTAL INPUT	23.018

WATER HEATER EFFICIENCY = 84.7%

ENERGY SAVING OPTION
* INCREASE JACKET INSULATION THICKNESS

ENERGY SAVINGS = 1.360 (BILLION) JOULES/YEAR

JACKET INSULATION THICKNESS = 0.1016 M
JACKET INSULATION THERMAL CONDUCTIVITY = 161.0 J/M-HR-C

TABLE D.2

ENERGY	JOULE/YEAR (BILLION)
TO HEAT WATER	19.490
LOST THROUGH JACKET WALLS	2.006
LOST THROUGH DISTRIBUTION PIPE	1.091
TOTAL INPUT	22.587

WATER HEATER EFFICIENCY = 86.3%

ENERGY SAVING OPTION
* INCREASE JACKET INSULATION THICKNESS

ENERGY SAVINGS = 1.604 (BILLION) JOULES/YEAR

JACKET INSULATION THICKNESS = 0.1270 M
JACKET INSULATION THERMAL CONDUCTIVITY = 161.0 J/M-HR-C

TABLE D.3

ENERGY	JOULE/YEAR (BILLION)
TO HEAT WATER	19.490
LOST THROUGH JACKET WALLS	1.762
LOST THROUGH DISTRIBUTION PIPE	1.091
TOTAL INPUT	22.343

WATER HEATER EFFICIENCY = 87.2%

ENERGY SAVING OPTION
* REDUCE JACKET INSULATION THERMAL CONDUCTIVITY

ENERGY SAVINGS = 1.987 (BILLION) JOULES/YEAR

JACKET INSULATION THICKNESS = 0.0508 M
JACKET INSULATION THERMAL CONDUCTIVITY = 70.0 J/M-HR-C

TABLE D.4

ENERGY	JOULE/YEAR (BILLION)
TO HEAT WATER	19.490
LOST THROUGH JACKET WALLS	1.379
LOST THROUGH DISTRIBUTION PIPE	1.091
TOTAL INPUT	21.960

WATER HEATER EFFICIENCY = 88.8%

ENERGY SAVING OPTION
* REDUCE JACKET INSULATION THERMAL CONDUCTIVITY

ENERGY SAVINGS = 2.347 (BILLION) JOULES/YEAR

JACKET INSULATION THICKNESS = 0.0762 M
JACKET INSULATION THERMAL CONDUCTIVITY = 70.0 J/M-HR-C

TABLE D.5

ENERGY	JOULE/YEAR (BILLION)
TO HEAT WATER	19.490
LOST THROUGH JACKET WALLS	1.020
LOST THROUGH DISTRIBUTION PIPE	1.091
TOTAL INPUT	21.600

WATER HEATER EFFICIENCY = 90.2%

ENERGY SAVING OPTION
* REDUCE JACKET INSULATION THERMAL CONDUCTIVITY

ENERGY SAVINGS = 2.519 (BILLION) JOULES/YEAR

JACKET INSULATION THICKNESS = 0.1016 M
JACKET INSULATION THERMAL CONDUCTIVITY = 70.0 J/M-HR-C

TABLE D.6

ENERGY	JOULE/YEAR (BILLION)
TO HEAT WATER	19.490
LOST THROUGH JACKET WALLS	0.848
LOST THROUGH DISTRIBUTION PIPE	1.091
TOTAL INPUT	21.428

WATER HEATER EFFICIENCY = 91.0%

ENERGY SAVING OPTION
* REDUCE JACKET INSULATION THERMAL CONDUCTIVITY

ENERGY SAVINGS = 2.618 (BILLION) JOULES/YEAR

JACKET INSULATION THICKNESS = 0.1270 M
JACKET INSULATION THERMAL CONDUCTIVITY = 70.0 J/M-HR-C

TABLE D.7

ENERGY	JOULE/YEAR (BILLION)
TO HEAT WATER	19.490
LOST THROUGH JACKET WALLS	0.749
LOST THROUGH DISTRIBUTION PIPE	1.091
TOTAL INPUT	21.330

WATER HEATER EFFICIENCY = 91.4%

ENERGY SAVING OPTION
* REDUCE THERMOSTAT SETTING

ENERGY SAVINGS = 1.220 (BILLION) JOULES/YEAR

	TANK WATER	INLET WATER	AMBIENT
TEMPERATURE	54.4	12.8	21.1

TABLE D.8

ENERGY	JOULE/YEAR (BILLION)
TO HEAT WATER	18.912
LOST THROUGH JACKET WALLS	2.882
LOST THROUGH DISTRIBUTION PIPE	0.934
TOTAL INPUT	22.727

WATER HEATER EFFICIENCY = 83.2%

ENERGY SAVING OPTION
* ADD FIBERGLASS INSULATION TO DISTRIBUTION PIPE

ENERGY SAVINGS = 0.631 (BILLION) JOULES/YEAR

LENGTH OF DISTRIBUTION PIPE = 7.62 M
THICKNESS OF FIBERGLASS INSULATION AROUND DISTRIBUTION LINE = 0.0127 M

TABLE D.9

ENERGY	JOULE/YEAR (BILLION)
TO HEAT WATER	19.490
LOST THROUGH JACKET WALLS	3.366
LOST THROUGH DISTRIBUTION PIPE	0.459
TOTAL INPUT	23.316

WATER HEATER EFFICIENCY = 83.6%

ENERGY SAVING OPTION
* ADD FIBERGLASS INSULATION TO DISTRIBUTION PIPE

ENERGY SAVINGS = 0.747 (BILLION) JOULES/YEAR

LENGTH OF DISTRIBUTION PIPE = 7.62 M
THICKNESS OF FIBERGLASS INSULATION AROUND DISTRIBUTION LINE = 0.0254 M

TABLE D.10

ENERGY	JOULE/YEAR (BILLION)
TO HEAT WATER	19.490
LOST THROUGH JACKET WALLS	3.366
LOST THROUGH DISTRIBUTION PIPE	0.344
TOTAL INPUT	23.200

WATER HEATER EFFICIENCY = 84.0%

GAS WATER HEATER:

ENERGY SAVING OPTION
*INCREASE JACKET INSULATION THICKNESS

ENERGY SAVINGS = 2.799 (BILLION) JOULES/YEAR

JACKET INSULATION THICKNESS = 0.0508 M
JACKET INSULATION THERMAL CONDUCTIVITY = 161.0 J/M-HR-C

BURNER ON-TIME = 670.0 HOURS/YEAR

TABLE D.11

ENERGY		JOULE/YEAR (BILLION)
TO HEAT WATER		19.490
LOST THROUGH JACKET WALL		2.232
LOST THROUGH DISTRIBUTION PIPE		1.091
FLUE LOSS	A) MAIN BURNER	7.002
	B) PILOT	5.126
TOTAL INPUT		34.941

WATER HEATER EFFICIENCY = 55.8%

ENERGY SAVING OPTION
* INCREASE JACKET INSULATION THICKNESS

ENERGY SAVINGS = 3.590 (BILLION) JOULES/YEAR

JACKET INSULATION THICKNESS = 0.0762 M
JACKET INSULATION THERMAL CONDUCTIVITY = 161.0 J/M-HR-C

BURNER ON-TIME =651.1 HOURS/YEAR

TABLE D.12

ENERGY		JOULE/YEAR (BILLION)
TO HEAT WATER		19.490
LOST THROUGH JACKET WALLS		1.631
LOST THROUGH DISTRIBUTION PIPE		1.091
FLUE LOSS	A) MAIN BURNER	6.805
	B) PILOT	5.134
TOTAL INPUT		34.151

WATER HEATER EFFICIENCY = 57.1%

ENERGY SAVING OPTION
* INCREASE JACKET INSULATION THICKNESS

ENERGY SAVINGS = 3.956 (BILLION) JOULES/YEAR

JACKET INSULATION THICKNESS = 0.1016 M
JACKET INSULATION THERMAL CONDUCTIVITY = 161.0 J/M-HR-C

BURNER ON-TIME = 642.3 HOURS/YEAR

TABLE D.13

ENERGY		JOULE/YEAR (BILLION)
TO HEAT WATER		19.490
LOST THROUGH JACKET WALLS		1.353
LOST THROUGH DISTRIBUTION PIPE		1.091
FLUE LOSS	A) MAIN BURNER	6.713
	B) PILOT	5.137
TOTAL INPUT		33.785

WATER HEATER EFFICIENCY = 57.7%

ENERGY SAVING OPTION
* INCREASE JACKET INSULATION THICKNESS

ENERGY SAVINGS = 4.162 (BILLION) JOULES/YEAR

JACKET INSULATION THICKNESS = 0.1270 M
JACKET INSULATION THERMAL CONDUCTIVITY = 161.0 J/M-HR-C

BURNER ON-TIME = 637.4 HOURS/YEAR

TABLE D.14

ENERGY		JOULE/YEAR (BILLION)
TO HEAT WATER		19.490
LOST THROUGH JACKET WALLS		1.197
LOST THROUGH DISTRIBUTION PIPE		1.091
FLUE LOSS	A) MAIN BURNER	6.662
	B) PILOT	5.139
TOTAL INPUT		33.578

WATER HEATER EFFICIENCY = 58.0%

ENERGY SAVING OPTION
* REDUCE JACKET INSULATION THERMAL CONDUCTIVITY

ENERGY SAVINGS = 3.544 (BILLION) JOULES/YEAR

JACKET INSULATION THICKNESS = 0.0254 M
JACKET INSULATION THERMAL CONDUCTIVITY = 70.0 J/M-HR-C

BURNER ON-TIME = 652.2 HOURS/YEAR

TABLE D.15

ENERGY		JOULE/YEAR (BILLION)
TO HEAT WATER		19.490
LOST THROUGH JACKET WALLS		1.666
LOST THROUGH DISTRIBUTION PIPE		1.091
FLUE LOSS	A) MAIN BURNER	6.816
	B) PILOT	5.133
TOTAL INPUT		34.196

WATER HEATER EFFICIENCY = 57.0%

ENERGY SAVING OPTION
* REDUCE JACKET INSULATION THERMAL CONDUCTIVITY

ENERGY SAVINGS = 4.533 (BILLION) JOULES/YEAR

JACKET INSULATION THICKNESS = 0.0508 M
JACKET INSULATION THERMAL CONDUCTIVITY = 70.0 J/M-HR-C

BURNER ON-TIME = 628.5 HOURS/YEAR

TABLE D.16

ENERGY		JOULE/YEAR (BILLION)
TO HEAT WATER		19.490
LOST THROUGH JACKET WALLS		0.914
LOST THROUGH DISTRIBUTION PIPE		1.091
FLUE LOSS	A) MAIN BURNER	6.569
	B) PILOT	5,143
TOTAL INPUT		33.207

WATER HEATER EFFICIENCY = 58.7%

ENERGY SAVING OPTION
* REDUCE JACKET INSULATION THERMAL CONDUCTIVITY

ENERGY SAVINGS = 4.839 (BILLION) JOULES/YEAR

JACKET INSULATION THICKNESS = 0.0762 M
JACKET INSULATION THERMAL CONDUCTIVITY = 70.0 J/M-HR-C

BURNER ON-TIME = 621.2 HOURS/YEAR

TABLE D.17

ENERGY		JOULE/YEAR (BILLION)
TO HEAT WATER		19.490
LOST THROUGH JACKET WALLS		0.682
LOST THROUGH DISTRIBUTION PIPE		1.091
FLUE LOSS	A) MAIN BURNER	6.492
	B) PILOT	5.146
TOTAL INPUT		32.902

WATER HEATER EFFICIENCY = 59.2%

ENERGY SAVING OPTION
* REDUCE JACKET INSULATION THERMAL CONDUCTIVITY

ENERGY SAVINGS = 4.984 (BILLION) JOULES/YEAR

JACKET INSULATION THICKNESS = 0.1016 M
JACKET INSULATION THERMAL CONDUCTIVITY = 70.0 J/M-HR-C

BURNER ON-TIME = 617.7 HOURS/YEAR

TABLE D.18

ENERGY		JOULE/YEAR (BILLION)
TO HEAT WATER		19.490
LOST THROUGH JACKET WALLS		0.572
LOST THROUGH DISTRIBUTION PIPE		1.091
FLUE LOSS	A) MAIN BURNER	6.456
	B) PILOT	5.148
TOTAL INPUT		32.756

WATER HEATER EFFICIENCY = 59.5%

ENERGY SAVING OPTION
*REDUCE JACKET INSULATION THERMAL CONDUCTIVITY

ENERGY SAVINGS = 5.067 (BILLION) JOULES/YEAR

JACKET INSULATION THICKNESS = 0.1270 M
JACKET INSULATION THERMAL CONDUCTIVITY = 70.0 J/M-HR-C

BURNER ON-TIME = 615.7 HOURS/YEAR

TABLE D.19

ENERGY		JOULE/YEAR (BILLION)
TO HEAT WATER		19.490
LOST THROUGH JACKET WALLS		0.509
LOST THROUGH DISTRIBUTION PIPE		1.091
FLUE LOSS	A) MAIN BURNER	6.435
	B) PILOT	5.149
TOTAL INPUT		32.673

WATER HEATER EFFICIENCY = 59.7%

ENERGY SAVING OPTION
* REDUCE THERMOSTAT SETTING

ENERGY SAVINGS = 1.793 (BILLION) JOULES/YEAR

	TANK WATER	INLET WATER	AMBIENT
TEMPERATURE	54.4	12.8	21.1

BURNER ON-TIME = 694.1 HOURS/YEAR

TABLE D.20

ENERGY		JOULE/YEAR (BILLION)
TO HEAT WATER		18.912
LOST THROUGH JACKET WALLS		3.732
LOST TRHOUGH DISTRIBUTION PIPE		0.934
FLUE LOSS	A) MAIN BURNER	7.254
	B) PILOT	5.116
TOTAL INPUT		35.947

WATER HEATER EFFICIENCY = 52.6%

ENERGY SAVING OPTION
* ADD FIBERGLASS INSULATION TO DISTRIBUTION PIPE

ENERGY SAVINGS = 0.831 (BILLION) JOULES/YEAR

LENGTH OF DISTRIBUTION PIPE = 7.62 M
THICKNESS OF FIBERGLASS INSULATION AROUND DISTRIBUTION LINE = 0.0127 M

BURNER ON-TIME = 717.1 HOURS/YEAR

TABLE D.21

ENERGY		JOULE/YEAR (BILLION)
TO HEAT WATER		19.490
LOST THROUGH JACKET WALLS		4.360
LOST THROUGH DISTRIBUTION PIPE		0.459
FLUE LOSS	A) MAIN BURNER	7.494
	B) PILOT	5.106
TOTAL INPUT		36.910

WATER HEATER EFFICIENCY = 52.8%

ENERGY SAVING OPTION
* ADD FIBERGLASS INSULATION TO DISTRIBUTION PIPE

ENERGY SAVINGS = 0.983 (BILLION) JOULES/YEAR

LENGTH OF DISTRIBUTION PIPE = 7.62 M
THICKNESS OF FIBERGLASS INSULATION AROUND DISTRIBUTION LINE = 0.0254 M

BURNER ON-TIME = 713.4 HOURS/YEAR

TABLE D.22

ENERGY		JOULE/YEAR (BILLION)
TO HEAT WATER		19.490
LOST THROUGH JACKET WALLS		4.360
LOST THROUGH DISTRIBUTION PIPE		0.344
FLUE LOSS	A) MAIN BURNER	7.456
	B) PILOT	5.108
TOTAL INPUT		36.758

WATER HEATER EFFICIENCY = 53.0%

ENERGY SAVING OPTION
* REDUCE PILOT RATE

ENERGY SAVINGS = 2.102 (BILLION) JOULES/YEAR

PILOT RATE = 422024.0 J/HR

BURNER ON-TIME = 764.1 HOURS/YEAR

TABLE D.23

ENERGY		JOULE/YEAR (BILLION)
TO HEAT WATER		19.490
LOST THROUGH JACKET WALLS		4.360
LOST THROUGH DISTRIBUTION PIPE		1.091
FLUE LOSS	A) MAIN BURNER	7.985
	B) PILOT	2.713
TOTAL INPUT		35.639

WATER HEATER EFFICIENCY = 54.7%

ENERGY SAVING OPTION
* ELIMINATE PILOT--ADD ELECTRIC IGNITER (AND FLUE CLOSURE)

ENERGY SAVINGS = 4.486 (BILLION) JOULES/YEAR

PILOT RATE = 0.0 J/HR

BURNER ON-TIME = 795.5 HOURS/YEAR

TABLE D.24

ENERGY		JOULE/YEAR (BILLION)
TO HEAT WATER		19.490
LOST THROUGH JACKET WALLS		4.360
LOST THROUGH DISTRIBUTION PIPE		1.091
FLUE LOSS	A) MAIN BURNER	8.313
	B) PILOT	0.000
TOTAL INPUT		33.254

WATER HEATER EFFICIENCY = 58.6%

ENERGY SAVING OPTION
* REDUCE EXCESS AIR FOR COMBUSTION (INCREASE FLUE BAFFLING)

ENERGY SAVINGS = 1.116 (BILLION) JOULES/YEAR

EXCESS AIR = 40%
TEMPERATURE DIFFERENCE = 244°C

BURNER ON-TIME = 710.3 HOURS/YEAR

TABLE D.25

ENERGY	JOULE/YEAR (BILLION)
TO HEAT WATER	19.490
LOST THROUGH JACKET WALLS	4.360
LOST THROUGH DISTRIBUTION PIPE	1.091
FLUE LOSS A) MAIN BURNER	6.591
B) PILOT	5.093
TOTAL INPUT	36.624

WATER HEATER EFFICIENCY = 53.2%

ORNL/CON-10

INTERNAL DISTRIBUTION

1. S. I. Auerbach
2. S. E. Beall
3. D. J. Bjornstad
4. D. Brooks
5. J. R. Buchanan
6. R. S. Carlsmith
7. J. Carney
8. W. S. Chern
9. T. J. Clifford
10. S. Cohn
11. J. Cope
12. C. G. Crafton
13. F. L. Culler
14. R. M. Davis
15. J. G. Delene
16. W. Fulkerson
17. G. S. Gill
18. W. R. Griffith
19. M. Guthrie
20. N. Hardin
21. V. O. Haynes
22. N. E. Hinkle
23. E. A. Hirst
24. J. R. Jackson
25. P. L. Johnson
26. S. I. Kaplan
27. D. Kaserman
28. R. S. Livingston
29. H. M. Long
30. J. W. Michel
31. R. E. Minturn
32. W. R. Mixon
33. J. C. Moyers
34. E. A. Nephew
35. H. Postma
36. M. W. Rosenthal
37. T. H. Row
38. R. L. Spore
39. E. G. Struxness
40. D. B. Trauger
41. G. U. Ulrikson
42. D. J. Walukas
43. A. M. Weinberg
44. H. E. Zittel
45. A. Zucker
46. Biology Division Library
47-48. Central Research Library
49. Institute of Energy Analysis, ORAU
50. Laboratory Records, ORNL R.C.
51-52. Laboratory Records Dept.
53. ORNL Patent Office
54. Document Reference Section

EXTERNAL DISTRIBUTION

55. Research and Technical Support Division, ERDA-ORO
56-82. Technical Information Center, ERDA, P. O. Box 62, Oak Ridge, Tennessee 37830
83-600. External Energy Conservation Distribution Mailing List and Energy Conservation Office.

☆ U.S. GOVERNMENT PRINTING OFFICE: 1977-748-189/251