ENERGY CONSERVATION

ORNL/Sub-7321/4

DEMONSTRATION of a HEAT-PUMP WATER HEATER

VOLUME 2
FINAL REPORT

JUNE 1981

Work Performed by
ENERGY UTILIZATION SYSTEMS, INC.
for
OAK RIDGE NATIONAL LABORATORY
operated by
UNION CARBIDE CORPORATION
for the

U. S. DEPARTMENT OF ENERGY

Office of Buildings and Community Systems

Printed in the United States of America. Available from
National Technical Information Service
U.S. Department of Commerce
5285 Port Royal Road, Springfield, Virginia 22161
NTIS price codes—Printed Copy: A07 Microfiche A01

This report was prepared as an account of work sponsored by an agency of the United States Government. Neither the United States Government nor any agency thereof, nor any of their employees, makes any warranty, express or implied, or assumes any legal liability or responsibility for the accuracy, completeness, or usefulness of any information, apparatus, product, or process disclosed, or represents that its use would not infringe privately owned rights. Reference herein to any specific commercial product, process, or service by trade name, trademark, manufacturer, or otherwise, does not necessarily constitute or imply its endorsement, recommendation, or favoring by the United States Government or any agency thereof. The views and opinions of authors expressed herein do not necessarily state or reflect those of the United States Government or any agency thereof.

ORNL/Sub-7321/4
Dist. Category UC-95d

DEMONSTRATION OF A HEAT PUMP WATER HEATER

Volume 2
Final Report

June 1981

Principal Investigators:

Robert P. Blevins
Barry D. Sloane
Gary E. Valli

ENERGY UTILIZATION SYSTEMS, INCORPORATED
365 Plum Industrial Court
Pittsburgh, Pennsylvania 15239

Prepared under Subcontract 7321 for the
OAK RIDGE NATIONAL LABORATORY
Oak Ridge, Tennessee 37830

operated by
UNION CARBIDE CORPORATION
for the
UNITED STATES DEPARTMENT OF ENERGY

Contract No. W-7405-eng-26

ABSTRACT

Energy Utilization Systems, Inc. (EUS), has developed an electric heat pump water heater for residential applications. A heat pump water heater is a device that works like a room air conditioner except that it pumps heat from a room, basement, garage, etc., into an attached water tank instead of rejecting this heat out-of-doors. The development of this device was the first phase of work sponsored by the U.S. Department of Energy through the Oak Ridge National Laboratory under contract number 7321.

The second phase of work involved the field demonstration of this device. Eighty-five heat pump water heaters were installed in single-family homes located in the service territories of 20 geographically and climatically dispersed electric utilities. The objective of this phase was to demonstrate the reliability and operating efficiency of the device. Utility personnel collected operating data and forwarded it to EUS on a monthly basis. These data were then analyzed and a monthly coefficient of performance (COP) was calculated for each unit.

This report details the results obtained from this field demonstration project.

FOREWORD

This is a report of work performed by Energy Utilization Systems, Inc. (EUS) covering the field demonstration phase of a heat pump water heater development project. The project is being sponsored by the Buildings and Community Systems Division of the United States Department of Energy through the Oak Ridge National Laboratory.

This volume, a continuation of a series of reports [1, 2, 3], describes and presents the results obtained from a one-year field demonstration of 85 residential heat pump water heaters.

EUS gratefully acknowledges the cooperation and diligence of the 20 electric utilities that participated in this demonstration project. Special recognition is due to Virgil O. Haynes, our technical monitor, for his guidance throughout this project and to William P. Levins of ORNL for his many contributions concerning testing and data analysis procedures.

Work has now begun on the final phase of this project, which involves the examination of 20 field-tested heat pump water heaters. The purpose of these examinations is to determine the expected long-term reliability and life expectancy of the heat pump water heater. The results of these examinations will be presented in a future report.

CONTENTS

Section	Page
ABSTRACT	iii
FOREWORD	v
ILLUSTRATIONS	ix
TABLES	xi
SUMMARY AND CONCLUSIONS	xiii
1.0 INTRODUCTION AND BACKGROUND	1-1
2.0 GENERAL OPERATING EXPERIENCE	2-1
3.0 TEST SITES AND SPECIFIC OPERATING EXPERIENCE	3-1
4.0 DATA COLLECTION	4-1
Instrumentation	4-1
Mode Shift Schedules	4-2
Data Reporting Forms	4-3
Utility Participation	4-3
5.0 DATA ANALYSIS	5-1
Data Reduction	5-2
Effects of Flawed Data	5-3
Data Classification	5-10
6.0 FIELD DEMONSTRATION RESULTS	6-1
Field Data Aggregation - Total Program	6-1
Field Data Aggregation - By Utility	6-9
Space Heating and Cooling Impacts	6-13
Participant Interviews	6-18
Economic Analysis	6-22
REFERENCES	R-1
APPENDIX A - DATA COLLECTION FORMS	
Data Reporting Form	A-1
Project Input Data Form	A-3
Participant Interview Form	A-6

CONTENTS (Continued)

Section	Page
APPENDIX B - DATA ANALYSIS	
Correction Calculation Procedure	B-1
Data Correction Program Listing	B-7
Linear Regression Method for Estimating the Dependence of COP on Temperature	B-11
APPENDIX C - FIELD DATA BASE AND SUMMARIES	
EUS Field Test Data	C-1
Summary of EUS Field Test Data by Utility and Unit	C-14
APPENDIX D - SUMMARY OF PHASE II WORK BY TASK	D-1

ILLUSTRATIONS

Figure		Page
1.1	Heat Pump Assembled to 82-Gallon Tank	1-2
1.2	Cutaway View of Heat Pump Water Heater	1-2
1.3	HPWH Field Demonstration Utility Locations	1-3
4.1	Instrumentation Package	4-1
5.1	Correction Program Output	5-5
5.2	Correction Program Output (TI Corrected +3°F)	5-6
5.3	Extreme Case #1	5-7
5.4	Extreme Case #2	5-7
5.5	Program Output with Input WR, WH - Extreme Case #1	5-8
5.6	Program Output with Input WR, WH - Extreme Case #2	5-8
5.7	Data Classification Tree	5-11
6.1	COP vs Ambient for Inlet Water = 60°F, Delivery Water = 140°F	6-6
6.2	COP vs Inlet Water Temperature for Ambient = 70°F, Delivery Water = 140°F	6-6
6.3	COP vs Delivery Water Temperature for Ambient = 70°F, Inlet Water = 60°F	6-8
6.4	Payback as a Function of Operating Cost Components	6-24

TABLES

Table		Page
2.1	Utility Field Service Summary	2-4
3.1	Test Site Locations and Characteristics	3-2
5.1	Reported Operating Data	5-4
6.1	Field Demonstration Data Breakdown - Average of All Field Data by Class	6-2
6.2	Field Demonstration Data Breakdown - Effective Overall COPs by Utility	6-10
6.3	Field Demonstration Data Breakdown - Average Household Annual Energy Savings by Utility	6-12
6.4	HPWH Field Demonstration - Questionnaire Responses According to Installation Type	6-20

SUMMARY AND CONCLUSIONS

A heat pump water heater is an energy-saving device that operates on a vapor-compression cycle similar to that of a window air conditioner, pumping heat from the surrounding air into water contained in a storage tank. It requires an energy input of one third to one half of that required by conventional electric resistance water heaters. Because of the cost- and energy-saving potential of the air-to-water heat pump water heater concept, it has been a candidate for research and development aimed at creating a practical commercial product.

Accordingly, Energy Utilization Systems, Incorporated (EUS) was granted a contract in 1977 by the Buildings and Community Systems Division of the U.S. Department of Energy for a project that was to be performed in two phases. Phase I involved the development of the heat pump water heater, including conceptual design and engineering, and Phase II involved building and field testing preproduction prototypes.

The integral heat pump water heater (HPWH) developed under Phase I of this project uses an 82-gallon water tank that has a 4-inch access hole in the top to enable insertion of the condenser. The heat pump assembly, which is mounted on top of the tank, is the same diameter as the tank and approximately 13 inches high. It houses the compressor, evaporator, thermal expansion valve (TXV), filter dryer, electrical controls, and fan. A cold water inlet is located at the bottom of the tank and a hot water outlet on the side of the tank near the top.

The HPWH uses R-12 refrigerant with a compressor that is rated at 11,000 Btu/h for R-22 refrigerant. The use of R-12 minimizes the maximum system pressure and reduces the average capacity to 7500 Btu/h. The immersion condenser has a dual-tube construction to provide double separation between refrigerant and potable water. The space between the tubes is filled with water (dyed red) to improve heat transfer between the refrigerant and the

water in the tank. In the event of a tube failure, a plastic cap is blown off the top of the condenser and the red dye gives a visible indication of the failure.

A retrofit HPWH, also developed under Phase I, was designed to be installed on a standard water heater. It consisted of a heat pump cabinet, for mounting on top of the water heater, and a condenser assembly, to be screwed into the lower resistance element hole and connected to the heat pump via copper tubes

The results of the Phase I research and development efforts were applied to Phase II. The objective of Phase II was to test the performance and reliability of the HPWH by subjecting the system to actual usage patterns under a wide variety of operating conditions. A pilot run facility was designed and constructed, and extensive laboratory tests were performed on several pilot run units to determine expected HPWH performance under varying conditions. The results of these tests are described in the Demonstration of a Heat Pump Water Heater, Volume I, Design Report (ORNL/Sub-7321/3). One unit was shipped to Underwriters Laboratories (UL) for pre-approval testing and evaluation. Several minor design modifications were required, but the prototype production design was approved and listed August 5, 1980.

Eighty-five integral and fifteen retrofit field demonstration units were built, tested, and shipped to 20 electric utilties that had agreed to participate in the project. These utilties arranged for the installation of the test units in customers' homes and monitored their operation. They were also responsible for providing EUS with site information and regularly forwarding unit operating data. The service territories of the utilities involved in the project represent a wide range of climates (see Fig. 1.3).

The units were installed between March 1979 and January 1980. Because of the many difficulties encountered in installing the 15 retrofit units, the retrofit design was deemed unsuitable for commercialization and the retrofit test was dropped from the field demonstration.

One anticipated benefit of the field demonstration was the identification of potential problems. Two prevalent problems with the HPWH were loss of refrigerant, due to failure of soldered joints or to poorly sealed TXV flare fittings, and condensate overflowing or missing the condensate tray. Because the major causes of joint leaks were poor quality workmanship and lack of vibration protection during shipping, the corrections included: brazing all joints; using only experienced, qualified labor; a loop built into the compressor discharge line to absorb stress; and fastening the tank to the compressor base with metal straps during shipping. Also, the condensate tray has been replaced with one that is three times as deep, has a drain hole twice as large, and has two overflow lips.

Two other, less common, problems were fan failures and water leaks at the tank flange. A different fan blade and motor mount are now being used to eliminate fan failures, and the flange gasket and sealing method has been modified to minimize water leaks. All of these modifications were incorporated into subsequent production units. In spite of the initial problems, general performance of the field test units was quite good.

Each test unit was equipped with an instrumentation package for recording data and initiating shifts in operating mode from heat pump to resistance water heating and vice versa. The package recorded kilowatthours consumed by the heat pump and the resistance elements, water temperature, ambient air temperature, gallons of hot water used, and energy used by the house heating and cooling system during each operating mode. Only one test site at each utility was equipped with an inlet water temperature recorder because it was assumed that supply water temperature would not vary appreciably within a utility service territory. While this was later found not to be the case, methods of data evaluation were developed to obtain useful results nonetheless.

Originally, the units were scheduled to shift modes, heat pump to resistance or vice versa, on a daily basis; however, this complicated data analysis since every shift in mode required calculational data adjustments. Therefore, in October 1979, the units were converted to a weekly mode shift schedule.

There were also significant problems with the instrumentation, particularly the strip-chart temperature recorders, whose mechanical malfunctions included the loss of one channel, excessive gain or loss of time, erratic tracking, broken impulse needles, tape jams, and complete motor failures. Because these recorders are difficult to accurately calibrate in-field and because of their tendency to drift out of calibration, periodic in-field manual temperature readings were implemented in March 1980.

The data collection procedures and data reporting forms were revised several times to improve the quality of the data. The data were sent to EUS for evaluation. Utility compliance with collection and reporting procedures was mixed. Manual temperature checks were regularly received from approximately 67% of the test sites. Weekly meter readings were regularly received from only about 47%. Completed general site data forms were submitted for 90% of the test sites, and completed sketch sheets, showing the location and orientation of the HPWHs, were submitted for 60%.

At EUS, the temperature charts and meter readings that were submitted by the utilities were reduced and analyzed to determine the coefficient of performance (COP) for each unit. A program was written to perform all of the data adjustment calculations using a Texas Instruments TI-59 programable calculator. However, because not all the data received were accurate, due to the instrumentation problems, and because complete, valid COP calculations were very limited, the program was modified to allow for direct input of empirically determined water consumption data and to bypass the major temperature-dependent calculations. In addition, the data were classified according to validity, Class 1 data carrying the highest level of confidence, Class 3 carrying the lowest, and nonclassifiable (NC) representing meaningless or highly questionable data.

The field demonstration provided 643 unit-months of valid (complete and/or consistent) operating data. Significant results include the following:

- The average monthly COP was 1.93, resulting in an energy savings of 48.2% over electric resistance water heating.

Average annual utility COPs ranged from a low of 1.70 to a high of 2.03. These measurements of performance are considered conservative since several of the units, having been damaged prior to installation, were suspected of substandard operation. Performance (COP) of the field test units was about 20% lower than that measured under laboratory conditions.

- Annual household energy savings, averaged by utility test groups, ranged from 1366 to 4555 kilowatthours. Electric resistance energy consumption averaged 6256 kWh/yr and HPWH energy consumption averaged 3339 kWh/yr, for an overall average savings of 2917 kWh/yr.
- The performance is more sensitive to ambient temperature than to inlet water temperature, the COP increasing by .0104 for each 1°F rise in ambient air temperature and decreasing by .0015 for each 1°F rise in inlet temperature. These sensitivities are both lower than those measured under laboratory conditions.
- There was no discernable correlation between COP and regional climate. It appears that the ambient temperatures affecting the units do not necessarily reflect outdoor ambient temperature.
- The instrumentation utilized was inadequate to definitely determine the impact of the HPWHs on house heating and cooling loads.

The validity of the test sample is enhanced by the fact that, after normalizing to the same family size, the average water heating requirements for the test program were within 10% of the national average water heating requirements as estimated by the National Bureau of Standards.

At the conclusion of the field test, participants were requested to complete a questionnaire aimed at gauging their satisfaction with the HPWH. The completed questionnaires indicate overall satisfaction with the unit. Ninety-six percent of the respondents considered the dehumidification to have either a positive effect or no effect. Eighty-three percent were

either positively affected or unaffected by the cooler air temperature surrounding the unit. Sixty-five percent considered the noise level to be no problem. When the questionnaire responses were segregated according to the location of the HPWH within the home, it could be seen that negative responses concerning the above effects were directly related to the proximity of the unit to living areas.

In order to estimate the economic attractiveness of the HPWH based on the field test results, payback periods were calculated as functions of various operating cost components such as effective overall COP (EOCOP), energy consumption, and energy cost within the ranges experienced by field test participants. The averages of the components obtained during the field test are 6000 kWh/yr., EOCOP of 1.9, and $.05/kWh, yielding a simple payback period of 0.7 years per $100 difference in initial costs. Assuming a $600 difference in initial costs for the HPWH over a standard electric water heater, the average consumer would realize a payback period of 4.2 years. System economics, as calculated, are most sensitive to changes in electric rates; therefore, since rates are almost certain to continue to increase, the HPWH appears to be an attractive investment.

Considering the present high cost of conventional energy sources and the expected continuing increases in price, the appearance of the HPWH on the market certainly seems to be timely. Moreover, the success of this DOE program has given rise to a host of new devices based on the air-to-water heat pump principle. Some of these products are: a new retrofit design HPWH, a heat pump swimming pool heater, a heat pump spa heater, a commercial-size HPWH, and a combination solar/heat pump water heater.

There are currently more than a dozen companies that are producing or have announced plans to produce HPWHs of various designs. This Department of Energy project can, therefore, be considered doubly successful in that it both demonstrated the viability of the HPWH concept and provided the impetus for the creation of a new domestic industry.

Section 1

INTRODUCTION AND BACKGROUND

Energy Utilization Systems, Incorporated (EUS), in a project sponsored by the Buildings and Community Systems Division of the United States Department of Energy (DOE), through the Oak Ridge National Laboratory (ORNL), has developed a heat pump water heater (HPWH) for residential installation. A heat pump water heater is a device that pumps heat from the surrounding air into a water tank, operating on a vapor-compression cycle similar to that of a window air conditioner.

The work was divided into two phases. Phase I, which covered the development of the heat pump water heater, including conceptual design and engineering, was completed in August 1978 [1, 2]. Two types of HPWHs were developed: an integral or new unit and a retrofit unit.

The integral HPWH (Figure 1.1) uses an 82-gallon tank manufactured by Mor-Flo Industries, Johnson City, Tennessee. The tank is 52 inches high and 25 inches in diameter, and has a 4-inch access hole in the top to enable the insertion of the condenser. The heat pump assembly, which is mounted directly on top of the tank, is of the same diameter as the tank and approximately 13 inches high. It houses the compressor, evaporator, thermal expansion valve, filter dryer, electrical controls, and fan. Figure 1.2 shows a cutaway view of the system.

The cold water inlet is at the bottom of the tank and the hot water outlet is on the side of the tank near the top. This configuration eliminates any problem of interference with the heat pump unit during installation. The compressor is a Copeland JRL4 model rated at 11,000 Btu/h using R-22 refrigerant. To avoid the high pressures associated with discharge temperatures that can exceed 200°F, R-12 refrigerant is used instead of R-22. This change in refrigerant reduces the compressor rating by approximately

Figure 1.1

HEAT PUMP ASSEMBLED TO 82-GALLON TANK

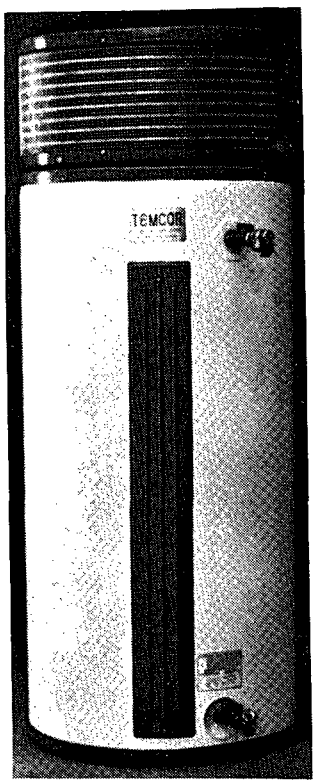

Figure 1.2

CUTAWAY VIEW OF HEAT PUMP WATER HEATER

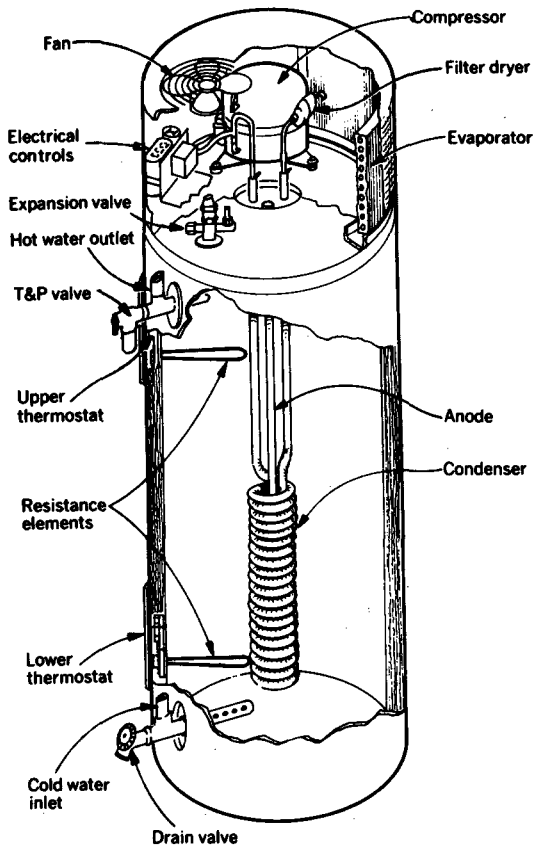

one third, to 7500 Btu/h. The immersion condenser has a dual-tube construction to provide double separation between refrigerant and potable water. The space between the tubes is filled with water (dyed red with food coloring) to improve heat transfer between the refrigerant and the water in the tank. In the event of a tube failure, a plastic cap is blown off the top of the condenser and the red dye gives a visible indication of the failure. Additional information regarding the design of this system can be found in references 1, 2, and 3.

The retrofit design was intended for installation on an existing water heater. The model developed during this project consisted of a heat pump cabinet (similar in appearance to the integral-type heat pump housing), which was mounted on top of the water heater, and a condenser assembly, which was screwed into the lower resistance element hole and connected to the heat pump via copper tubes.

Phase II of the project involved the field demonstration of the HPWH. It was designed to test the performance and long-term reliability of the HPWH by subjecting the system to actual usage patterns under a wide variety of operating conditions. Under Phase II, a pilot run facility for unit assembly and testing was designed and constructed [3]. One unit was sent to Underwriters Laboratories (UL) for testing and evaluation. After several minor design modifications, on August 5, 1980, the prototype production design was approved and listed. Eighty-five integral and 15 retrofit units were built, tested, and shipped to 20 electric utility companies that had agreed to participate in the field demonstration. These utilities arranged for installation of the test units in customers' homes and monitored their operation.

The service territories of the 20 utilities involved in this project represent a wide range of climates. Figure 1.3 identifies these utilities and their geographic locations. Additional information concerning specific unit locations can be found in Section 3 of this report.

Figure 1.3

HPWH FIELD DEMONSTRATION UTILITY LOCATIONS

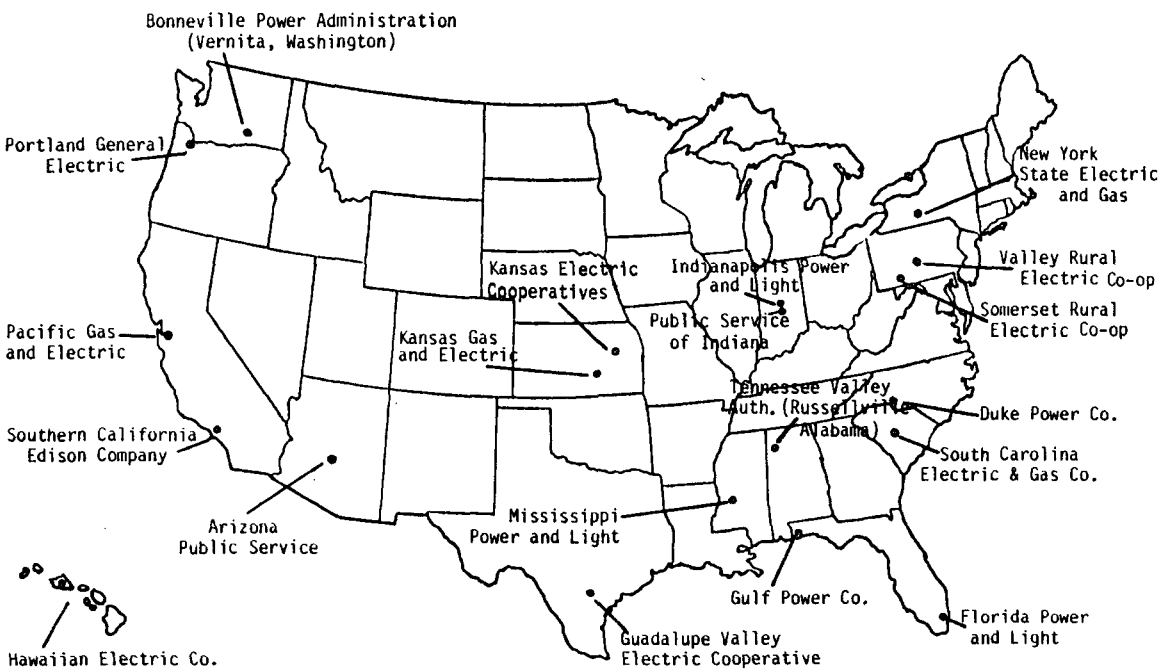

The actual installation of the HPWHs commenced in March 1979. Several problems arose with respect to the retrofit units. Installers found the condenser assemblies difficult to install in the tanks. A few utilities had difficulty locating appropriate installation sites: some sites had inadequate space for the heat pump, some tanks were too small, and some tanks had the wrong type of tank flange. As a result, by January 1980, only eight of the fifteen retrofit units had been installed. Because of these field installation difficulties, EUS determined early in 1980 that this retrofit design would not be suitable for commercialization.

In March 1980, EUS and ORNL decided that the retrofit test, as it then existed, would provide few positive results and that monitoring the installed retrofit units should be given low priority. This enabled us to devote our available funding and manpower to the integral unit demonstration data analysis. As a result, this report does not address the retrofit unit test except as described here, and all further discussions of the heat pump water heater test program refer only to the 85 integral units. This report details the chronology and results of the HPWH field demonstration program.

This report is a summary of work performed during Tasks 5, 6, and 7 of Phase II. A summary of the work scope for each task in Phase II is provided in Appendix D.

Section 2

GENERAL OPERATING EXPERIENCE

One expected benefit of the field demonstration program was the identification of potential problem areas. It was felt that the experiences gained by subjecting the prototype HPWHs to actual operating conditions would lead to improvements in the product design. Although, in general, the performance of the units, as described in later sections of this report, was good, several operational problems did occur and are described in this section along with actions taken to resolve these problems.

There were two prevalent problems with the HPWHs themselves. The first was the loss of refrigerant caused by the failure of soldered joints or by poorly sealed thermal expansion valve (TXV) flare fittings. Between 40% and 45% of the units involved in the demonstration program suffered refrigerant loss to some degree and required the attentions of refrigeration service people. Although the majority of these leaks were discovered and repaired at the time the units were installed, many others were not discovered until significant amounts of unrepresentative data had been collected. In some cases, these losses of charge caused damage that necessitated compressor replacement. In the first twelve months of the demonstration program, a total of seven compressors were replaced. In addition, six complete heat pump assemblies were substituted for defective field units. It is possible that some of these failures were caused by defective components, but the majority are believed to have been caused by the loss of refrigerant charge.

The major cause of joint leaks was poor quality workmanship due to insufficiently trained labor, and was aggravated by a lack of protection from shipping damage and vibrations during operation. To correct these shortcomings, the original design has been changed to include the following:

- All joints, including those formerly flared, are now brazed instead of soldered, and only experienced, qualified labor is being utilized.
- A loop is now built into the compressor discharge line to absorb the stress from compressor vibration during shipment and operation.
- The tank is fastened with metal straps to the base on which the compressor is mounted, to prevent shifting between tank and compressor during transportation.

The incorporation of these modifications into the HPWH design has resulted in the elimination of workmanship- and shipping-related refrigerant loss. In addition to these mechanical changes, pressure switches have been added to the basic design of the unit. A low-pressure switch has been added to automatically switch the unit to the resistance mode in the event of refrigerant loss, evaporator freeze-up, or if ambient temperatures fall below about 40°F. This switch reduces the likelihood of compressor failure in the event of loss of charge and enables the use of the HPWH in unconditioned spaces even where ambient temperatures periodically fall below normal recommended operating ranges. A high-pressure switch has been added to turn the unit off if there is a blockage in the refrigerant line or if the water tank is empty. An empty tank will cause high pressures because the condenser cannot transfer much heat. System reliability and operating flexibility are thus greatly increased.

The second most prevalent problem was that of condensate from the evaporator coil overflowing or missing the condensate tray. It would then run down inside the base of the unit, often causing rust problems and/or wetting the tank insulation and the floor. A new condensate tray was designed that is three times deeper than the original. It has a drain hole twice as large as the original and has two overflow lips that direct condensate to the outside of the unit in case the hole becomes plugged. Thirty-six of the HPWHs involved in the field demonstration were retrofitted with this new design tray.

Two other unit design and construction problems occurred occasionally. The first involved fan failures and the second involved water leaks at the tank flange. A total of eight fan-related failures occurred, most of which involved the fan blade itself. Several blades were damaged because the fan motor mounts fell off, and several other blades literally fell apart, the blade assembly separating from its mounting hub. A different blade and motor mount are now being used to eliminate failures of this kind. Some units experienced water leaks at the tank flange, but in most cases these leaks were minor, and self-sealed after a short time. In the case of one utility, however, leaks on three units were severe enough to require field service by EUS personnel. The flange gasket and sealing method have been modified to minimize any such leaks on current units.

Although most of the operational problems were resolved by the utilities themselves, seven utilities required field service by EUS personnel. These utilities, along with a brief description of the nature of the service rendered, are listed in Table 2.1.

The instrumentation utilized to obtain data was also a source of problems throughout the project. The most significant difficulty was with the Rustrak strip-chart temperature recorders. Thirty-two recorders suffered mechanical malfunctions that necessitated replacement of the recorders. These malfunctions included the loss of one channel, an excessive gain or loss of time, erratic tracking, broken impulse needles, tape jams, and complete motor failures.

It is estimated that as many as 90% of the recorders were out of calibration to some extent, ranging from a few degrees Fahrenheit to as much as 20°F. Because these recorders are difficult to accurately calibrate in-field and because of their tendency to slowly drift out of calibration, procedures were implemented in March 1980, that involved periodic in-field manual temperature readings against which the recorder readings were compared. This procedure, along with a general discussion of all data collection practices, is discussed more thoroughly in succeeding sections of this report.

Table 2.1

UTILITY FIELD SERVICE SUMMARY

Utility	Nature of Service
Duke Power Company	Removed plastic anode bushings which were prohibited by North Carolina codes.
Hawaiian Electric Company	Replaced two heat pump assemblies, repaired and recharged one unit, installed new condensate trays.
New York State Electric & Gas	Serviced instrumentation.
Somerset Rural Electric Co-op	Repaired and recharged one unit, replaced heat pump assembly on one unit.
South Carolina Electric & Gas	Sealed flange leaks on three units, repaired and recharged all units.
Tennessee Valley Authority	Serviced instrumentation, repaired and/or recharged all units.
Valley Rural Electric Co-op	Replaced compressor on one unit, replaced heat pump assembly on one unit.

Section 3

TEST SITES AND SPECIFIC OPERATING EXPERIENCE

Twenty utilities participated in the HPWH field demonstration. The utilities, the number of test units installed by each, and house and family information are listed in Table 3.1. The remainder of this section describes, for each utility, the testing period, site characteristics, and any specific problems encountered with operation or data collection. For several of the utilities, usable data were not available until several months after the units were installed. Therefore, an installation date and an available-data date are indicated.

TEST SITES

Arizona Public Service Company

Four HPWHs were installed by Arizona Public Service (APS) in August 1979. Useful data were collected from November 1979 through October 1980. All four units were installed in unconditioned and uninsulated integral (i.e., basement) garages.

One of the original APS units failed soon after installation. A replacement unit was sent and installed by November 1979, but the original was not returned to EUS until March 1980. Because the utility's service personnel had made extensive alterations in their attempts to fix the unit, it was not possible to definitely identify the problem, but the unit probably had poorly soldered fittings, resulting in refrigerant leaks.

APS modified at least two of the units by installing ductwork on the evaporator face. The performances of these modified units were much lower than what would normally have been expected and it is believed that this was due to the ductwork reducing the air flow through the units.

Table 3.1

TEST SITE LOCATIONS AND CHARACTERISTICS

Location	House Type	Location	People in Family
	ARIZONA PUBLIC SERVICE		
Phoenix, AZ	Ranch, Slab, Integral Garage	Garage	4
Phoenix, AZ	Tri-level, Integral Garage	Garage	3
Phoenix, AZ	Ranch, Slab, Integral Garage	Garage	4
Prescott, AZ	2-story, Basement, Integral Garage	Garage	6
	BONNEVILLE POWER ADMINISTRATION		
Vernita, WA	Ranch, Partial Basement	Partial Basement	4
Vernita, WA	Ranch, Full Basement, Attached Garage	Full Basement	5
Vernita, WA	Ranch, Partial Basement	Partial Basement	3
Vernita, WA	Ranch, Partial Basement	Partial Basement	3
	DUKE POWER COMPANY		
Charlotte, NC	Ranch, Crawl Space	Utility Room	2
Matthews, NC	2-story, Slab	Heat Pump Room	4
Charlotte, NC	* Basement	Basement	3
Charlotte, NC	Ranch, Crawl Space	Utility Room	4
	FLORIDA POWER & LIGHT		
Miami, FL	Ranch, Slab, Garage	Garage	5
Miami, FL	Ranch, Slab, Garage	Garage	4
Miami Shores, FL	Ranch, Slab, Garage	Garage	2
Miami Lakes, FL	Ranch, Slab, Garage	Garage	6

* Details not provided

Table 3.1 (Continued)

Location	House Type	Location	People in Family
	GUADALUPE VALLEY ELECTRIC COOPERATIVE		
Gonzales, TX	Ranch, Slab, Integral Garage	Garage	4
Seguin, TX	Ranch, Slab, Integral Garage	Garage	4
Seguin, TX	Ranch, Slab, Carport	Utility Room	4
Schertz, TX	Ranch, Slab	Utility Room	6
Schertz, TX	Ranch, Slab, Attached Garage	Utility Room	5
	GULF POWER COMPANY		
Pensacola, FL	Ranch, Slab, Integral Garage	Garage	4
Milton, FL	Ranch, Slab, Integral Garage	Garage	4
Pensacola, FL	Ranch, Slab, Integral Garage	Recreation Room	4
Pensacola, FL	Ranch, Slab, Integral Garage	Garage	2
Pensacola, FL	Ranch, Slab, Integral Garage	Garage	4
	HAWAIIAN ELECTRIC COMPANY		
Honolulu, HI	Slab, Carport	Carport Storage Cabinet	5
Kahaluu, HI	2-story, Carport	Carport	10
Honolulu, HI	Split-level	Utility Room	5
Aiea, HI	Split-level, Carport	Open area under house	5
	INDIANAPOLIS POWER AND LIGHT		
Indianapolis, IN	Ranch, Partial Basement	Basement	4
Indianapolis, IN	1-1/2-story, Basement	Basement	3
Indianapolis, IN	Tri-level, Partial Basement	Basement	4
Indianapolis, IN	2-story, Basement	Basement	4

Table 3.1 (Continued)

Location	House Type	Location	People in Family
	KANSAS ELECTRIC COOPERATIVES		
Ellsworth, KS	1-story, Basement, Attached Garage	Basement	4
Cheney, KS	* Basement	Basement	*
Burlington, KS	*	*	*
Mankato, KS	Ranch, Basement	Basement	2
	KANSAS GAS & ELECTRIC		
Wichita, KS	Ranch, Basement, Attached Garage	Basement Utility Room	2
Wichita, KS	Ranch, Basement, Attached Garage	Basement Heat Pump Room	2
Wichita, KS	Tri-level, Basement, Attached Garage	Basement	4
Goddard, KS	Tri-level, Basement, Attached Garage	Basement Utility Room	4
	MISSISSIPPI POWER AND LIGHT		
Jackson, MS	Ranch, Slab, Carport	Utility Room	2
Jackson, MS	Ranch, Slab, Garage	Storage Room	4
Pearl, MS	2-story, Slab, Garage	Storage Room	2
Jackson, MS	Ranch, Slab, Garage	Utility Room	4
	NEW YORK STATE ELECTRIC AND GAS		
Freeville, NY	2-story, Basement, Attached Garage	Basement	4
Ithaca, NY	2-story, Basement, Attached Garage	Basement	4
Ithaca, NY	Ranch, Basement, Carport	Basement	5
Dryden, NY	Ranch, Basement, Attached Garage	Basement	4
Ithaca, NY	2-story, Basement, Attached Garage	Basement	4

* Details not provided

Table 3.1 (Continued)

Location	House Type	Location	People in Family
	PACIFIC GAS AND ELECTRIC		
Kelseyville, CA	Ranch, Crawl Space, Attached Garage	Utility Room	4
Clovis, CA	Ranch, Crawl Space, Attached Garage	Utility Room	3
Kelseyville, CA	2-story	Utility Room	3
Marysville, CA	Ranch, Crawl Space, Attached Garage	Utility Room	3
	PORTLAND GENERAL ELECTRIC		
Lake Oswego, OR	Ranch, Basement, Integral Garage	Basement Utility Room	2
St. Helens, OR	2-story, Basement, Attached Garage	Basement Utility Room	4
Sherwood, OR	Ranch, Attached Garage	Garage	4
West Linn, OR	* Basement, Attached Garage	Basement Utility Room	5
	PUBLIC SERVICE COMPANY INDIANA		
Plainfield, IN	Ranch, Partial Basement	Basement	4
Noblesville, IN	2-story, Slab, Attached Garage	Garage	2
Plainfield, IN	Ranch, Basement, Attached Garage	Basement Storage Area	4
Greenwood, IN	Ranch, Crawl Space, Attached Garage	Basement Utility Room	4
*	2-story, Basement	Basement Utility Room	2
	SOMERSET RURAL ELECTRIC COOPERATIVE		
Berlin, PA	Ranch, Basement	Basement	4
Meyersdale, PA	2-story, Basement	Basement Utility Room with Wood Burner	3
Boswell, PA	Ranch, Basement	Basement Workshop	3
Friedens, PA	Ranch, Basement	Basement Utility Room	4

* Details not provided

Table 3.1 (Continued)

Location	House Type	Location	People in Family
	SOUTH CAROLINA ELECTRIC & GAS		
Columbia, SC	2-story, Crawl Space	Breezeway	4
Columbia, SC	2-story, Crawl Space	Breezeway	2
Columbia, SC	2-story, Crawl Space	Utility Room	5
Columbia, SC	2-story, Basement	Basement	2
Columbia, SC	2-story, Basement	Basement	4
	SOUTHERN CALIFORNIA EDISON		
Walnut, CA	Ranch, Slab, Attached Garage	Garage	3
Orange, CA	Ranch, Slab, Attached Garage	Garage	*
Torrance, CA	Frame, Attached Utility Shed	Utility Shed	4
Grand Terrace, CA	Frame, Slab, Attached Garage	Garage	2 - 4
	TENNESSEE VALLEY AUTHORITY		
Russellville, AL	2-story, Basement	Basement	4
Russellville, AL	Ranch, Basement	Basement	3
Russellville, AL	Ranch, Basement	Basement	4
Russellville, AL	Ranch, Basement	Basement	4
	VALLEY RURAL ELECTRIC COOPERATIVE		
Huntingdon, PA	Ranch, 2/3 Basement	Basement with Wood Stove	2
Shade Gap, PA	Ranch, Basement	Basement	5
Hustontown, PA	Ranch, Basement	Basement with Wood Stove	5
Duncansville, PA	Ranch, Basement	Basement Utility Room	6

* Details not provided

One participant sold his house in May 1980. The unit from this house was removed and, in June, was used to replace a unit that had failed. In June 1980, the APS project engineer checked operating pressures of all the units (at EUS request). He added charge to all the units to increase the discharge pressure. There was a noticeable effect, particularly on one of the units, for which COPs from June on were significantly higher than in the preceding months.

Bonneville Power Administration

Four HPWHs were installed by Bonneville Power Administration (BPA) in early September 1979. Useful data became available in March 1980 for two units and in May 1980 for the remaining two units, and were collected until December 1980. The absence of operating data for the first several months was primarily due to chronic problems with the Rustrak temperature recorders. In November 1979, BPA project personnel informed EUS that at least three of the units had been bypassed after the participants complained of a lack of hot water. Several diagnostic suggestions were offered at that time and BPA personnel gave assurance that the units would be serviced. In February 1980, BPA personnel again informed EUS that the units were malfunctioning. No confirmation of this was possible because not a single valid temperature tape had been submitted up to that date.

After lengthy discussion it was discovered that BPA personnel had significantly modified the units at the time of their installation. These modifications included the addition of high- and low-pressure cut-off switches (setpoints unknown), the addition of copper tubing loops in the refrigeration system, and the brazing over of all soldered joints. BPA was also the only utility at the time that had not converted its units to weekly mode shifts (see Section 4). BPA again agreed to service the units. EUS provided a four-page letter of instructions for servicing and included copies of all previous data collection instructions.

The units were repaired and put back into service in March 1980, but continued temperature recorder problems precluded data analysis on two units until May 1980.

Three of the units were installed in unconditioned, partial basements and one was installed in an unconditioned full basement. One major administrative problem was that all of the units were installed in Vernita, Washington, which is over 100 miles from BPA's headquarters in Portland, Oregon. This made monitoring and servicing of the units difficult.

Duke Power Company

Duke Power Company (DPC) installed four HPWHs in June 1979. Useful data were collected from October 1979 until monitoring was discontinued at the end of July 1980. The units were installed in unconditioned spaces: one was in an open basement, two were in utility rooms, and one was in a furnace room.

One unit developed several refrigerant leaks in July and August, 1979. This unit was subsequently replaced with a new one, and data collection began in October 1979. Two other units were found to have much smaller refrigerant leaks in April 1980. The units were recharged and later repaired, but several months' worth of data were lost because of the delay in identifying the problem and making repairs.

Florida Power & Light

Four HPWHs were installed by Florida Power & Light (FPL) in October 1979 and data were collected from November 1979 through December 1980. All four units were installed in garages.

One unit was found to be low on charge and was serviced in January 1980. The only other significant problem at Florida Power & Light involved data collection and recording procedures. Temperature data consistently produced highly suspicious calculated results, but it was not until May 1980 that manual temperature checks confirmed that the recorders were all out of calibration.

Guadalupe Valley Electric Cooperative

Three HPWHs were installed in July 1979 and two more were installed in August 1979. Data were available from August 1979 through August 1980 for one unit, through September 1980 for another unit, and through December 1980 for the other three units. All five units suffered refrigerant losses that were not discovered and repaired until late in the first quarter of 1980. One site experienced chronic temperature recorder problems and required recorder replacement three times. The fan on one unit failed and the unit was out of service for two months before it was repaired.

One unit was removed from service in January 1980 and one was removed in March 1980 because the participants had sold their homes and moved away. A replacement site was found for one of these units in June 1980. Because of these difficulties, the overall data base for Guadalupe Valley Electric Cooperative (GVE) is very limited.

Two of the units were installed in garages and two in first-floor utility rooms.

Gulf Power Company

Three HPWHs were installed by Gulf Power Company (GPC) in April 1979 and two were installed in May 1979. Data were available for all units from June 1979 through completion of GPC testing in June 1980.

The only significant problem encountered at Gulf Power concerns the acceptability of data from one site. No weekly readings or manual temperature checks are available for this site, and it is believed that this participant would manually switch the unit from heat pump to resistance mode whenever the room air temperature became too cool. As such, it was difficult to accurately calculate performances for this site.

Four of the units were installed in unconditioned garages, while the fifth was installed in a fully conditioned recreation room.

Hawaiian Electric Company

Four HPWHs were installed in July 1979. From the onset, the units suffered operational problems, many of which are believed to be traceable to the fact that the units had been shipped lying on their sides. Additional early problems included significant condensate overflows. Early Hawaiian Electric Company (HEC) attempts to service the units proved to be unsuccessful. In January 1980, EUS serviced all four units, which involved the complete replacement of two heat pump assemblies, repairing a leak, and recharging a third and fourth unit. All units were retrofitted with large-capacity condensate trays. In addition, two instrumentation panels required service. Data collection procedures were also reviewed with HEC personnel.

Data on the four units were collected from January 1980 through September 1980. One unit was installed in an open carport, one in a closet in an open carport, one in an above-grade utility room, and the fourth in an open area beneath the home.

Indianapolis Power & Light

Three HPWHs were installed by Indianapolis Power & Light (IPL) in June 1979 and a fourth unit was installed in July 1979. Data were collected from August 1979 through August 1980 on one unit, through September 1980 on the second unit, through October 1980 on the third unit, and through November 1980 on the fourth unit. The fourth unit was removed from a participant's home in July 1980 and reinstalled in an IPL employee's home for the duration of the test program.

Testing proceeded extremely well at IPL with no significant problems. All four units were installed in basements.

Kansas Gas and Electric Company

Kansas Gas and Electric (KGE) installed four units in November 1979 and data were collected from the time of installation through November 1980 on two units and through December 1980 on the others. Three of the units

were installed in unconditioned basement utility rooms; the fourth unit was installed in an open basement area.

No major problems arose with KGE, except that data were sent in 3-month batches, causing delay in our data reduction efforts. KGE did not provide any weekly readings but performed temperature checks. The data quality appears to be good.

Kansas Electric Cooperatives, Inc.

Kansas Electric Cooperatives (KEC) is the statewide organization of rural cooperatives in Kansas. KEC purchased four HPWHs for the DOE test program and several additional units for its own test. The units were then distributed to KEC's member co-ops for testing. Unfortunately, the person originally coordinating KEC's test program retired at about the same time the units were shipped. As a result, the program was never properly organized, the participating co-ops were never properly instructed in installation and maintenance procedures, and data collection efforts were severely hampered for most of the program.

Several additional problems occurred. KEC sent one HPWH to each of four different co-ops for testing, but did not request additional source water temperature recorders or installation/instruction manuals. One of the participating co-op's coordinators, who had also been involved in the initial planning for the test, suffered a heart attack early in the program. As a result, a loss of charge in that co-op's unit went undetected for about seven months because data were not being forwarded to EUS. The person who took over KEC's coordination of the program did not devote much time to this project. There were long delays between the time the data were collected by the co-ops and the time EUS received the data. Consequently, problems with temperature recorders went undetected for long periods, and a great deal of data was lost.

Arrangements were finally made in May 1980 for EUS to deal with the individual co-ops directly. However, by that time the project had been

in progress for about a year and it was apparent that the only way that the units could be put back into working order would be if EUS personnel serviced them. This was considered to be too expensive, so the decision was made to try to determine which units were operating properly and to exclude what little data was available for the other units.

Although the units were installed in August 1979, there was no useable operating information prior to December 1979 for three of the installations. No useable data were ever received for the fourth unit. Data collection was terminated in October 1980. Of the three units for which there is some data, only one appears to be operating well; data for the other two are highly suspect. Three of the units were installed in unconditioned basements; the location of the fourth unit has still not been determined.

Mississippi Power and Light Company

The first Mississippi Power and Light (MPL) HPWH was installed in July 1979. Two more were installed in August 1979 and the fourth was installed in December 1979.

There have been no reported HPWH operational problems, but MPL's program has been hampered by serious data flow problems. Chronic temperature recorder malfunctions, coupled with misapplication of thermocouples, prevented any meaningful data analysis through April 1980 for one site and throughout the entire test at another site. The unit installed in December experienced similar temperature problems in May 1980, after which no useable data were available. Because of these difficulties, the MPL data base is very limited. Monitoring continued from installation through September 1980 for two units with temperature data.

All four units were installed in first-floor utility rooms.

New York State Electric and Gas Corporation

Five HPWHs were installed by New York State Electric and Gas (NYE) in late March 1979. Useable data are available for three of the units beginning in July 1979 (daily cycle until October), for a fourth unit since November 1979, and for a fifth unit since April 1980. Monitoring was discontinued in August 1980. All five units were installed in unconditioned basements.

There were early problems with all of the units, and a service call was made by EUS personnel to make repairs. It was found that the condenser inlet and outlet lines of one unit were reversed, resulting in high water temperatures; several units had refrigeration leaks due to poor soldering; and the instrumentation on one unit had malfunctioned.

Poor data reporting resulted in the delay, until November 1979, of useable data on the fourth unit. The fifth unit apparently failed shortly after the EUS visit and was not repaired until April 1980. One of the three units, for which data were available initially, appears to have failed in February 1980, and was not repaired.

Pacific Gas and Electric Company

Two HPWHs were installed by Pacific Gas and Electric (PGE) in August 1979. A third unit was installed in November 1979 and a fourth was installed in January 1980. While installing the fourth unit, a condenser failure was detected. Soon after the condenser was replaced, the compressor failed. The unit was finally put into service in April 1980. Other significant problems at Pacific Gas and Electric involved an incorrectly wired kWh meter that registered only one half of total resistance mode consumption at one site, and a chronic Rustrak problem at another. Data were collected from the time of installation through August 1980 at three sites and through November 1980 at the fourth site.

All four units were installed in first-floor utility rooms.

Portland General Electric Company

Portland General Electric (POR) installed two HPWHs in August 1979, another in September 1979, and a fourth in November 1979. Data were collected from December 1979 through October 1980 at one site, through November 1980 at a second site, and through December 1980 at a third site.

No serious operational problems occurred, with the exception of recurring temperature recorder failures at the fourth site, resulting in only one month of useable data.

Three units were installed in basement utility rooms. The fourth unit was installed in an attached garage.

Public Service Company of Indiana

Five HPWHs were installed in July 1979 and data were collected from August 1979 through completion of testing at the end of July 1980. Testing proceeded very smoothly at Public Service Company of Indiana (PSI) with only one interruption in data flow. This interruption occurred when one unit had to be switched to resistance-only mode for approximately three months due to extremely low ambient temperatures.

Two units were installed in garages and three were installed in basements.

Somerset Rural Electric Cooperative

Four HPWHs were installed between April and July 1979. Somerset Rural Electric Cooperative (SRE) experienced several minor problems, including loss of charge from two units and chronic temperature recorder problems at most sites. These problems caused no major interruptions in data flow, however, because EUS personnel, being in close proximity to SRE, were generally able to perform field service promptly.

A major problem did occur with one unit. This unit lost charge early in the test. It was recharged, but not before five months data had been lost.

In November 1979, problems developed with its mode control timer. Calculated performances were extremely low, so additional field service was performed in July 1980 when the unit was diagnosed to have a faulty compressor. The unit was rebuilt in July 1980. Data were collected from July 1979 through July 1980 for two units and through August 1980 for a third. No useable data on the fourth unit were obtained following the rebuilding effort.

One unit was installed in a full basement. The remaining three were installed in basement utility rooms.

Southern California Edison

Four HPWHs were installed in September 1979. Data for three units were collected from October 1979 through October 1980, though several months data are missing. No meter readings were available for the fourth unit after February 1980. No operational problems were evident; however, Southern California Edison (SCE) did not transmit program data and information on a regular basis, and did not even supply participant project input data until April 1981.

South Carolina Electric and Gas Company

Five HPWHs were installed in early fall of 1979. Several significant operational problems occurred soon after installation, delaying the commencement of the program. All five units developed water leaks and at least two units had lost refrigerant charge. One water leak was so severe that it damaged the floor. In November 1979, EUS personnel serviced all five South Carolina Electric and Gas (SCL) units and corrected these difficulties. Formal testing did not begin, however, until late February 1980. This additional delay was caused by the utility's desire to observe the units for a period of time, so that they could be assured that all earlier problems had been resolved. Data were collected from March 1980 through December 1980, except for one unit which reportedly failed in July 1980; no further data were obtained for this unit.

One unit was installed in a first-floor utility room, two in basements, and two in entrance rooms between the garage and home.

Tennessee Valley Authority

Although Tennessee Valley Authority (TVA) had administrative responsibility for this portion of the demonstration project, the actual installation and testing of the units was performed by the municipal utility of Russellville, Alabama.

Four HPWHs were installed in June 1979. From the onset, operational and instrumentation problems were evident. Russellville and TVA personnel were either unable or unwilling to service the units. In December 1979, TVA contacted EUS and insisted that EUS perform field service on all of the Russellville units. In January 1980, EUS personnel visited Russellville and serviced the units and the testing program was reactivated.

In the following months, no operational problems occurred, but several instrumentation and procedural difficulties did develop. A malfunctioning timer caused one unit to remain in resistance mode until April 1980, when Russellville personnel serviced the timer. After servicing, the unit shifted to and remained in heat pump mode for the duration of the test.

EUS was not provided with weekly meter readings or manual temperature checks, despite assurances from Russellville and TVA that these data would be transmitted.

Testing was concluded in July 1980. All four units were installed in basements.

Valley Rural Electric Cooperative

Valley Rural Electric (VRE) installed three HPWHs in April 1979, and a fourth one in May 1979. One unit experienced a compressor failure that was not corrected until August 1979. Soon after the compressor was replaced, an electrical problem developed, causing the system circuit

breaker to constantly trip. The problem was finally diagnosed as a faulty breaker in the house service entrance and data collection resumed upon reparation. Another unit also developed operational problems early in the test. EUS personnel serviced this unit in January 1980.

Data are available for these two units from January 1980 through July 1980. Data are available for the other two units from July 1979 through completion of testing in July 1980, although early data from one of these is extremely suspect. One unit represents a highly atypical test site since this family's hot water consumption averages less than ten gallons per day.

All four units were installed in unconditioned basements, two of which contain wood-burning stoves.

Section 4

DATA COLLECTION

INSTRUMENTATION

Each installation in the field demonstration program was equipped with an instrumentation package consisting of five kWh meters, a dual-channel, strip-chart temperature recorder, and a 14-day timer to shift the unit between heat pump mode and resistance mode according to a set schedule. A water meter was installed on the cold-water inlet of each water heater. Figure 4.1 shows the elements of the electrical-temperature instrumentation package. A more detailed description of this panel can be found in the design report for this project [3].

Figure 4.1

INSTRUMENTATION PACKAGE

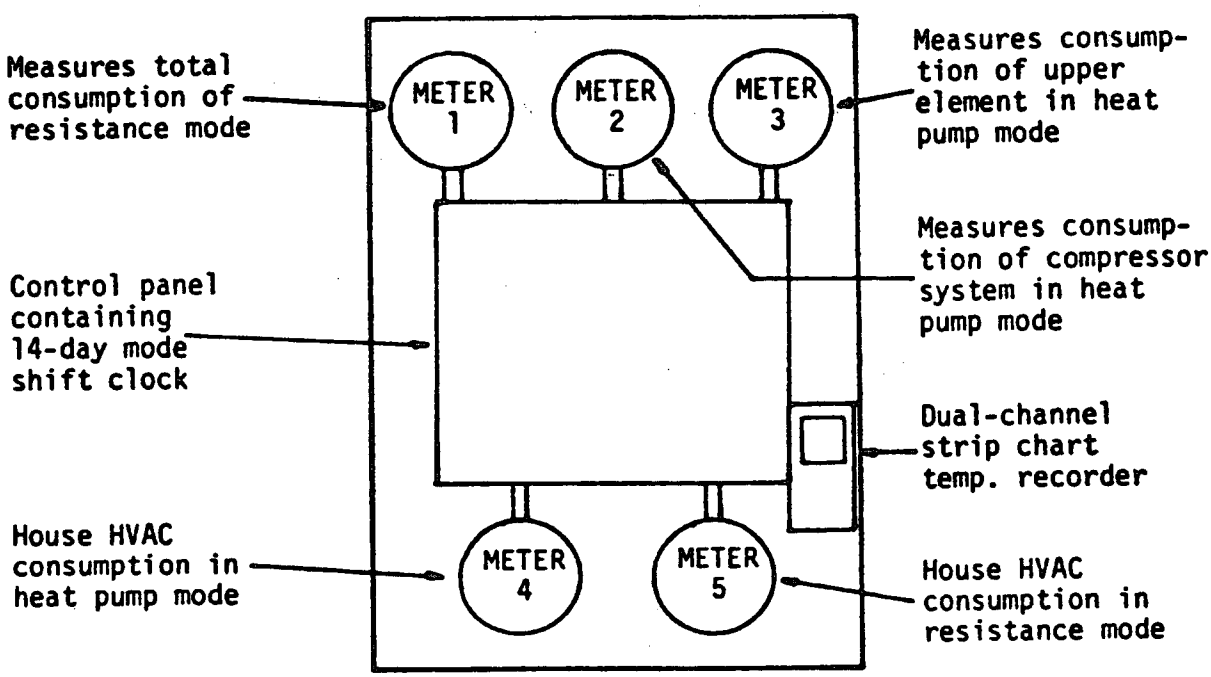

During resistance mode operation, meter 1 measured total kilowatthour consumption of both the upper and lower resistance elements in the tank. During heat pump operation, meter 2 measured the kilowatthour consumption of the heat pump system, while meter 3 measured any upper resistance element consumption. Meter 4 measured the consumption of the house heating and/or cooling system while the unit was in the heat pump mode. Meter 5 measured this consumption while the unit was in the resistance heating mode.

The dual-channel temperature recorder recorded ambient air temperature on one channel via a thermocouple mounted above the air intake of the unit. Delivery water temperatures were measured on the second channel via a thermocouple securely clamped to the hot-water outlet line of the water heater. A separate, single-channel, strip-chart temperature recorder monitored inlet water temperatures via a thermocouple clamped to the cold-water inlet line to the water heater. Only one test site at each utility was equipped with this single-channel recorder. The rationale for utilizing only one inlet water recorder at each utility was based on the assumption that supply water temperatures would not vary appreciably from test site to test site within a given utility service territory. While this was later found not to be the case, methods of data evaluation were developed to obtain useful results, as explained in Section 5. Each utility was responsible for collecting and recording meter readings and replacing the recorder charts. The data were then forwarded to EUS for analysis.

MODE SHIFT SCHEDULES

The recommended procedure for collecting the data was altered several times during the demonstration program. A change in the schedule for shifts between two water heating modes (heat pump and resistance heating) was also made early in the test period. The original schedule was for the unit to shift modes, heat pump to resistance or resistance to heat pump, on a daily basis, changing at approximately 12:30 a.m. Because calculational adjustments, to account for water temperature differences from mode to mode, were required each time a unit shifted modes, the

decision was made in October 1979 to convert all of the units to a weekly mode shift schedule. The resultant reduction in mode shifts significantly reduced the number of required data adjustments and simplified data analysis. A discussion of the nature of these and all other data adjustments is presented in the data analysis section of this report.

DATA REPORTING FORMS

The data collection procedures and data reporting forms were revised several times to improve the quality of the data. The original data collection form was designed to record monthly meter readings. Concurrent with the October 1979 change from daily to weekly mode shift schedules, utilities were requested to read and record water consumption and kilowatthour data on a weekly basis. This procedure would provide a true indication of the amounts of water consumed in each mode and would eliminate the need to quantify these water apportionments through calculations. A new form was prepared and distributed (Appendix A, page A-1) to accomodate weekly data recordings.

By March 1980, it had become apparent that the temperature data derived from the Rustrak strip charts were not consistently reliable because of calibration, tape loading, and mechanical problems. Utilities were requested to take monthly manual readings of delivery water, inlet water and ambient air temperatures and to check these readings against Rustrak recorder readings. A second page (Appendix A, page A-2) was added to the data reporting form for entry of these manual readings, and thermometers were provided to any utility that requested them. This supplemental form also requested checks on Rustrak recorder and mode-control timing.

UTILITY PARTICIPATION

Utility compliance with data collection and reporting procedures was mixed. Manual temperature checks were received regularly from approximately 67% of the test sites. Weekly meter readings were regularly provided by only about 47% of the test sites. The availability of weekly readings and

temperature checks has a direct impact on the level of confidence placed in the data. These effects are discussed in the section on data analysis.

In addition to submitting unit operating data, utilities were requested to provide information on the physical characteristics of the sites and to obtain feedback from users by way of a participant interview form. A two-page project input data form (Appendix A, pages A-3 and A-4) was provided with each HPWH, with the request that it be completed at the time of unit installation. This form requested general information on the size and style of home, family size, insulation data, and location of the unit within the home. Completed forms were submitted for approximately 90% of the test sites. In March 1980, it became evident that further data were required, so more detailed site information was requested. A sheet was provided (Appendix A, page A-5) so that utility personnel could sketch the location and orientation of the HPWH within the area of its installation. Piping runs, thermocouple locations, heat sources, and area dimensions were to be indicated. Completed sketch sheets are available for approximately 60% of the test sites. Another two-page form (Appendix A, pages A-6 and A-7) was provided to obtain information from the users concerning their satisfaction with the units. The responses are presented in Section 6.

Section 5

DATA ANALYSIS

After operating data were collected by the utilities and submitted to EUS, the data were analyzed to determine the monthly coefficient of performance (COP) for each unit. The COP is defined as the ratio of kilowatthours consumed by the unit during resistance mode operation to the kilowatthours required during the heat pump mode to produce the same quantity and quality of hot water.

Over a given monitoring period, the electrical consumption of the units under the two modes of operation can be determined directly from meter readings. If all things were equal, the COP could be derived simply by dividing the resistance-mode kilowatthour consumption by the heat-pump-mode kilowatthour consumption. The result of this comparison is what is referred to as the "raw" or apparent COP. Since the heat pump COP is calculated as a function of the resistance-mode heating energy, the only way to determine a realistic heat pump COP is to ensure that the calculations are all based on delivery of the same amount of water at the same temperature from the same inlet water temperature.

Because of the relative locations of the condenser, lower resistance element, and thermostat, the average delivery water temperature produced during the heat pump mode is higher than that generated during the resistance mode. While this difference in temperature can vary from a few degrees to as much as 15°F on some units, the average difference found during the field demonstration was 5°F. This means that the heat pump supplies the water with more energy than does the resistance element; and since the temperatures of the water and tank are higher, the jacket losses are also higher during the heat pump mode. In addition, every time the unit shifted from the heat pump mode to the resistance mode, energy stored in the tank would be credited to, though not provided by, the

resistance element. Conversely, additional energy was required when the unit shifted from the resistance mode to the heat pump mode, and it was provided by but not credited to the heat pump system. The method of analysis adjusts the resistance heating energy by the amount that would be required for the resistance heaters to supply water at the same temperature as that supplied by the heat pump. Additional adjustment factors are necessary to account for differences in jacket losses caused by differences in the number of days that the unit was in each mode, and differences in amounts of water consumed in each mode.

DATA REDUCTION

Prior to the actual analysis of operating data, the raw data (temperature charts and meter readings) submitted by the utilities were reduced. The first phase of this reduction process was the translation of the temperature charts into average delivery water, average ambient, and average inlet water conditions for each period that a given unit operated in each mode. As discussed in Section 4 of this report, each site was equipped with a dual-channel temperature recorder for measuring delivery water and ambient air temperatures. One unit in each utility group was equipped with a single-channel temperature recorder for measuring inlet water temperatures.

A typical temperature tape contains 28 to 35 days of data. Daily averages were determined for delivery water and ambient air temperatures, recorded on a tape translation form, and then grouped according to heat pump or resistance mode. From these groupings, an average heat pump mode delivery water temperature (TH), average resistance mode delivery water temperature (TR), and average ambient temperature under each mode (TA_H, TA_R) were determined for the monitoring period. Source water temperature tapes were translated in a similar manner, except that no distinction was made between modes of operation. The resultant average inlet water temperature (TI), along with the above-mentioned temperature averages, was entered on a monthly calculation sheet. Cumulative kilowatthours and water meter readings were then transferred from the data reporting form to the monthly calculation sheet and reduced to gallons of water and

kilowatthours consumed during the monitoring period (W, M_1, M_2, M_3, M_4, and M_5). If weekly meter readings were provided by the utility, the total amounts of water consumed in heat pump mode (WH) and resistance mode (WR) were determined from the data reporting form and entered on the calculation sheet. The final stage of data reduction involves determining the exact number of days that the unit was in each mode (DH, DR) during the monitoring period, and the number of times that the unit shifted from resistance mode to heat pump mode (ZH) and vice versa (ZR). All of these data are used in the calculation of unit performance.

As mentioned previously, certain performance calculation adjustments were necessary to account for the different amounts of water consumed in each mode and for the differences in water temperature, between each mode. The first step in the analysis of the data was the calculation of the amounts of water consumed in each mode (WR, WH). A detailed description of the procedure used for this calculation is shown in Appendix B. The procedure basically calculates WR based on M_1, TR, TI, TA, DR, TH, and an empirically determined system loss characteristic (H). WH is then derived by subtracting WR from the total water consumption (W) for the monitoring period. The ratio $\frac{WH}{WR}$ is applied to correct the data for unequal water apportionments.

The balance of the calculations deals primarily with the differences between TH and TR. The calculation procedure used to account for this ΔT adjusts the resistance heating energy by the amount that would be required for the resistance heaters to supply water at the same temperature as that supplied by the heat pump. A detailed description of the method of analysis used to make these ΔT adjustments is shown in Appendix B.

In October 1979, a program was written to perform all of these adjustment calculations using a Texas Instruments TI-59 programmable calculator. A listing of this program is provided in Appendix B.

EFFECTS OF FLAWED DATA

As with any calculational tool, the COP derived by using this program is only as valid as the data used. As discussed in Section 4 of this report,

the weakest link in the data flow was the temperature data obtained from the Rustrak temperature recorders. The effects that inaccurate temperature readings can have on the final calculations is best demonstrated through the use of an example.

Table 5.1 lists data as reported for the four-week period, December 3, 1979 to December 31, 1979, for one of the test sites.

Table 5.1

REPORTED OPERATING DATA

Reading Date	Operating Mode at Time of Reading	Resistance M1 (in kWh)	Heat Pump M2 (in kWh)	Backup Resistance M3 (in kWh)	Water Meter (gallons)
12/3/79	R	00738	00298	00036	6863
12/10/79	HP	00739	00368	00051	7593
12/17/79	R	00889	00369	00051	8292
12/24/79	HP	00889	00450	00067	9103
12/31/79	R	01040	00450	00067	9658

The raw or apparent COP is determined by dividing the total M1 consumption by the M2 + M3 consumption.

302 kWh ÷ (152 kWh + 31 kWh) = 1.65

Translation of the temperature tapes for this site showed the following average temperatures:

Average heat pump mode delivery water temperature	137°F
Average resistance mode delivery water temperature	127°F
Average ambient air temperature	74°F
Average inlet water temperature	37°F

These temperatures, along with kilowatthour and water consumption data obtained from the data reporting form, are entered into the correction program, the output of which (shown in Figure 5.1) indicates a COP of 2.39. This calculated COP is a true reading of the unit's performance, provided that the temperature and consumption inputs are correct.

An appropriate technique for evaluating the validity of the data is to compare the calculated water apportionments (WR and WH) with actual readings. This technique is particularly useful in determining the validity of temperature data because the apportionment calculation relies very heavily upon all temperature inputs. The program printout in Figure 5.1 shows

Figure 5.1

CORRECTION PROGRAM OUTPUT*

```
EUS HP DATA ANALYSIS
        2795.        W
         302.       M1
         152.       M2
          31.       M3
          14.       DH
          14.       DR
           2.       ZH
           2.       ZR
         137.       TH
         127.       TR
          37.       TI
          74.       TA
           8.        H

  1213.08636       WR
  1581.91364       WH
29.35668991        QT
7.875769118        QJ
        1.99       QR
        1.99       QH
432.4772391      M1C
2.385012236      COP
```

* Data inputs from Table 5.1.

calculated water consumptions of 1213 gallons on resistance days and 1582 gallons on heat pump days. The weekly meter readings in Table 5.1 show that actual consumptions were 1254 gallons and 1541 gallons, respectively, and indicate that the data are reasonably accurate, although somewhat suspect. A manual temperature check was made at the site in question and revealed that the source water temperature was actually 3°F higher than was indicated by the temperature recorder. Entering the corrected TI into the correction program yields the results shown in Figure 5.2, indicating a COP of 2.27.

Figure 5.2

CORRECTION PROGRAM OUTPUT*

(TI Corrected +3°F)

```
EUS HP DATA ANALYSIS
        2795.        W
         302.       M1
         152.       M2
          31.       M3
          14.       DH
          14.       DR
           2.       ZH
           2.       ZR
         137.       TH
         127.       TR
          40.       TI
          74.       TA
           8.        H

 1254.916924       WR
 1540.083076       WH
 30.36898956       QT
 7.875769118       QJ
        1.99       QR
        1.99       QH
 411.1710726      M1C
 2.268585096      COP
```

* Data inputs from Table 5.1.

The water apportionments calculated in Figure 5.2 are within 1 gallon of the actual water apportionments and indicate that the data, as corrected, are accurate. The 3°F change in TI in this example resulted in a 5% change in calculated COP.

Since the three temperature inputs (delivery water, ambient, and source water) are produced by three separate thermocouples and two separate recorders, it is possible for all three temperature readings to be incorrect, independent of one another. Assuming a ±5°F recorder error, the printouts in Figure 5.3 and 5.4 show the two extreme cases possible if all temperatures reported were ±5°F.

Figure 5.3

EXTREME CASE #1

Delivery water	5°F	low
Inlet water	5°F	high
Ambient	5°F	high

```
EUS HP DATA ANALYSIS
        2795.        W
         302.       M1
         152.       M2
          31.       M3
          14.       DH
          14.       DR
           2.       ZH
           2.       ZR
         132.       TH
         122.       TR
          42.       TI
          79.       TA
           8.        H

1405.400121       WR
1389.599879       WH
34.01068293       QT
7.875769118       QJ
       1.99       QR
       1.99       QH
344.4248363      M1C
1.903851565      COP
```

Figure 5.4

EXTREME CASE #2

Delivery water	5°F	high
Inlet water	5°F	low
Ambient	5°F	low

```
EUS HP DATA ANALYSIS
        2795.        W
         302.       M1
         152.       M2
          31.       M3
          14.       DH
          14.       DR
           2.       ZH
           2.       ZR
         142.       TH
         132.       TR
          32.       TI
          69.       TA
           8.        H

1059.235351       WR
1735.764649       WH
 25.6334955       QT
7.875769118       QJ
       1.99       QR
       1.99       QH
519.5990553      M1C
2.861087734      COP
```

In these examples, altering all temperatures by ±5°F altered the calculated COPs by ±20%. While careful manual temperature checks would have improved the validity of these calculations, a simpler and more reliable method is available. Since, in these examples, the actual WR and WH are available, it is possible to enter these empirical values directly into the correction procedure, thereby bypassing a long string of highly temperature-dependent calculations.

The calculations that follow the WR-WH determinination in the analysis procedure show far less sensitivity to temperature values. This is because these remaining calculations correct for the difference between TR and TH. Since both of these values are produced by the same thermocouple and recorder channel, it is reasonable to assume that the difference between TR and TH will always be reasonably valid, even though the absolute values of TR and TH may be incorrect because of recorder calibration errors.

The correction program was modified in March 1980 to allow for the direct input of empirically determined WR and WH (program option 3). Figures 5.5 and 5.6 show the outputs of this option using the same data arrays as those used in Figures 5.3 and 5.4, respectively.

Figure 5.5
PROGRAM OUTPUT WITH INPUT WR, WH
EXTREME CASE #1

```
OPT.  3 *INPUT WR WH*

        1254.     WR
        1541.     WH

        1254.       WR
        1541.       WH
      30.3468       QT
7.875769118         QJ
        1.99        QR
        1.99        QH
413.4260978       M1C
2.280907638       COP
```

Figure 5.6
PROGRAM OUTPUT WITH INPUT WR, WH
EXTREME CASE #2

```
OPT.  3 *INPUT WR WH*

        1254.     WR
        1541.     WH

        1254.       WR
        1541.       WH
      30.3468       QT
7.875769118         QJ
        1.99        QR
        1.99        QH
409.8210806       M1C
2.261208091       COP
```

The calculated COPs in these two examples come within less than 1% of the calculated value of Figure 5.2 despite the fact that all temperature values were altered by ±5°F. This demonstrates the validity and the value of this calculation option.

Thus far, the validity of the calculations has been dependent upon the availability of good weekly meter readings and/or good manual temperature checks. As mentioned in Section 4 of this report, only 47% of the test sites provided weekly readings and only 67% of the test sites provided manual temperature checks. Of those that did provide weekly readings and/or temperature checks, a certain percentage did not take all meter readings on the correct days or did not provide sufficient information with the manual temperature readings to make the readings useful. As a result, only about 50% of the data received from the test sites may be analyzed using one of the two procedures outlined thus far, with any reasonable level of confidence in the final answer.

In March 1980, another modification (program option 2) was made to the correction program to allow for analysis of incomplete or suspect data. This program option also bypasses the major temperature-dependent calculations (WR and WH determination), in this case, by assigning a water apportionment based on the number of days the unit operates in each mode. For example, if a unit operated for 14 days in heat pump mode and 14 days in resistance mode during a given 28-day monitoring period, then WR is assumed to be equal to WH. If, however, the unit operated for 16 days in heat pump and 15 days in resistance during a 31-day monitoring period, then WR is set equal to $\frac{15}{31}$ of all the water consumed during the monitoring period. This is all based on the assumption that the daily water consumption at the site is relatively constant and is independent of the mode (heat pump or resistance) during which it occurs. While this assumption may be statistically valid when long periods of time are considered, it is not necessarily valid for the short monitoring periods used in this project. The result, very often, is a series of monthly COPs which possess greater validity when considered as a whole, rather than individually. This method of analysis does, however, make possible the use of some incomplete or suspect data.

DATA CLASSIFICATION

As described in this and previous sections, the quality of the data submitted by the utilities ranges from excellent to extremely poor. This, coupled with the fact that several different procedures may be utilized to analyze the data, results in calculated COPs to which various levels of confidence may be assigned.

A method was developed whereby useable data were ranked into one of three classes. Class 1 data are those that carry the highest level of confidence, Class 2 data carry a mid-level of confidence, while Class 3 data carry the lowest level of confidence. This data classification refers only to the quality of the data flow itself and does not reflect the relative quality of the units (good performer, poor performer, etc.) from which the data were collected. In addition to these three data classes, a nonclassifiable (NC) category is defined for meaningless or highly questionable data.

Figure 5.7 presents the logic flow for data analysis in a decision tree type format. There are basically three major checks. The data are reported either weekly or monthly, are complete or incomplete, and are provided with or without temperature correlations. Where data are incomplete, further attempts are made to obtain the missing data. The end result of each decision path is the assignment of a data class and a corresponding COP.

It was often possible to "recover" NC data the next month, either by calculating a two-month average COP or by determining what the original data should have been, based on the following month's data. For example, if a water meter reading was not available for a given month, the readings for the previous and following months could be used. If there was an apparently incorrect reading for M_1, M_2, or M_3, the correct reading could often be inferred (or sometimes supplied) from the following month's data. The originally NC data could then be reclassified, based on the new data.

Figure 5.7

DATA CLASSIFICATION DECISION TREE

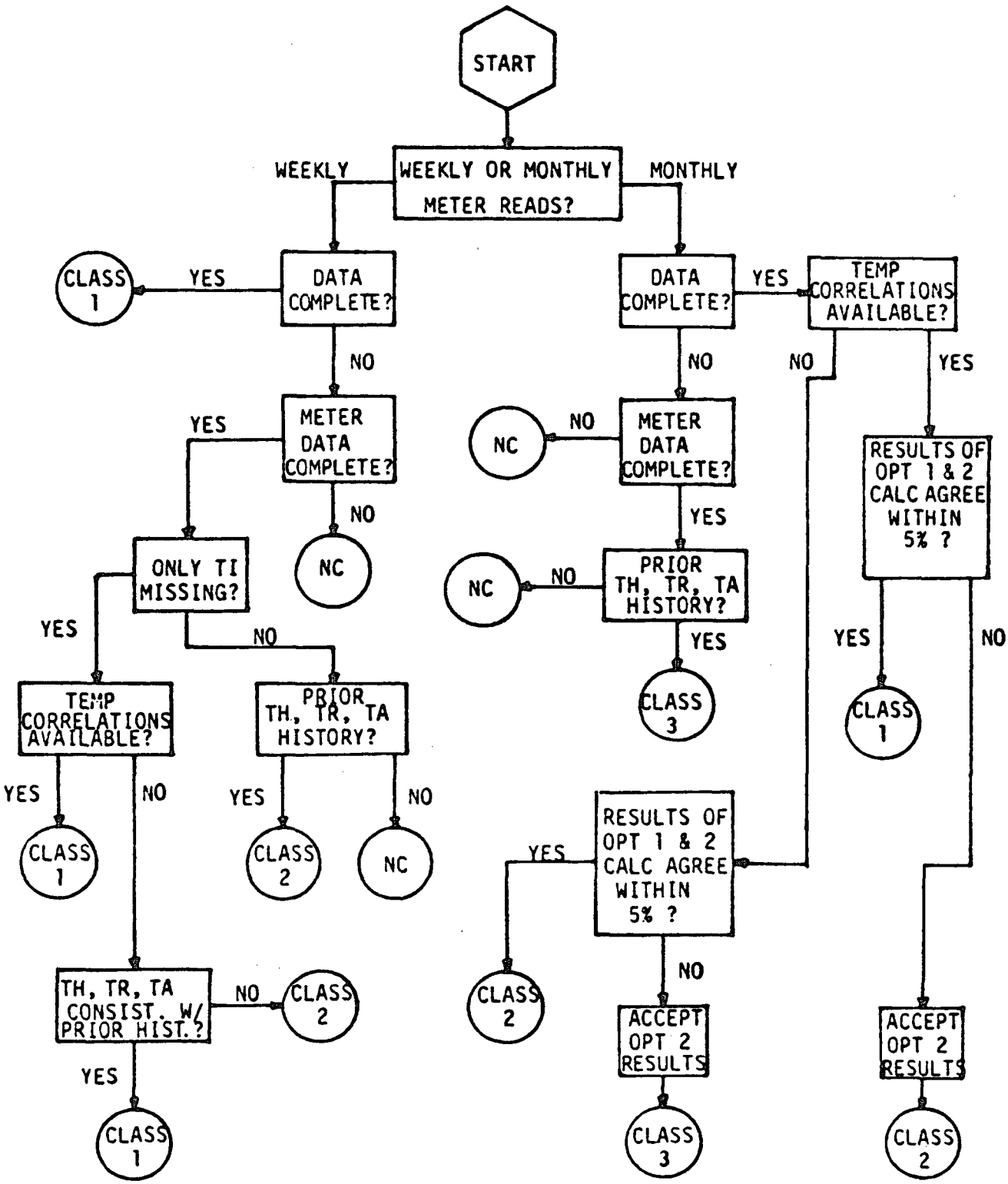

Starting at the top of Figure 5.7, the data are determined to be either weekly or monthly. In the case of normally weekly readings with one or more readings missing during the month, the data for that month is considered to be monthly. In addition, the term "weekly readings" implies highly reliable weekly data (i.e., data for which the M_1, M_2, M_3, and W readings are apparently taken at the right times). Following the arrow down the "weekly" side of the figure, the data are checked for completeness. If they are recorded weekly and are complete, the data and calculated COP are considered to be Class 1. If the data set is incomplete, further checks are necessary to determine its classification.

Missing meter readings (M_1, M_2, M_3, or W) make it impossible to calculate the COP with any accuracy for that period; therefore, the data are placed in the NC category. If the meter readings are complete, but some of the temperature data are missing, the final classification is dependent on the available temperatures.

The availability of inlet water temperature (TI) is checked first. If we have weekly readings, it is possible to have Class 1 data, even if TI is missing, because TI is only used to determine the water usage split between heat pump and resistance mode operation. By using the option 3 calculation, the actual water usage for each mode (obtained from the data sheet) can be used to determine the COP. In order to call this Class 1 information, however, there must be some indication that the other temperature data (i.e., temperature correlations for ambient and delivery water temperatures) are correct.

If there are no temperature correlations, the data file for the site is checked for prior delivery and ambient temperature history. If there is prior information and the current TH, TR, and TA are consistent, the data are Class 1. If there is no prior history for TH, TR, and TA, the data are Class 2. Because weekly readings are available, the option 3 calculation is used in both cases.

If TI, as well as TH, TR, and/or TA is missing, the data will be NC if there is no well-established prior history for TH, TR, and TA. The classification will be Class 2, however, if such a history does exist, because changes in TA, and particularly in TH and TR, are generally relatively small from month to month. Again, the option 3 calculation is used with the actual water usage for each mode.

Turning to the "monthly" side of Figure 5.7, the situation for incomplete data is much simpler than the corresponding weekly case. If any meter readings are missing, the data are NC. If any of the temperature data are missing and there is no reliable history for the missing temperatures, the data are again NC, because any attempt at calculations would involve pure guesswork for the input data. Where a prior history exists, the data and resulting COP are Class 3 and are generally based on the option 2 calculation, because this is less dependent on input temperatures than is option 1.

For complete monthly data, a check is made to determine if useable temperature correlations are available. Where temperature checks are available, the data are used with both option 1 and option 2 calculations. If the calculated results from these two methods are within about five percent of each other, the data and resultant COP are Class 1. If the results do not agree within the specified limit, the option 2 results are chosen, because of the decreased dependence on temperatures and the assumption of equal daily water usage, and the data class is reduced to Class 2.

When temperature checks are not available, the logic sequence is the same, but the resultant data classes are reduced from Class 1 or Class 2 to Class 2 or Class 3 because of the reduction in data confidence levels.

Section 6

FIELD DEMONSTRATION RESULTS

The field demonstration has provided data for a total of 733 unit-months of operation. This corresponds to an average 8.6 months of operational data per test unit. All of these data have been reduced and monthly performances have been calculated and classified using the techniques described in Section 5 of this report.

For the purpose of data aggregation and evaluation, only 643 of the 733 calculated COPs are utilized. The remaining 90 COPs (12.3% of the data base) were removed from consideration for one of several reasons. Twenty COPs were excluded because the units for which they were calculated had been significantly modified at the time of installation and, as such, were deemed to be nonrepresentative of the intended test device. Thirteen COPs were excluded because of extremely low water consumption rates (averaging 10 gallons per day) at one site. These low water consumption rates were deemed to be nonrepresentative of normal use characteristics. Fifty-seven COPs were excluded because the units for which they were calculated had lost all or most of their refrigerant, or had experienced some other form of operational difficulty. This latter group of COPs was excluded only after utility personnel had confirmed the condition of the units involved. It is highly probable that an additional number of units were in substandard operating condition during the demonstration project. Although the COPs calculated for these substandard units are not representative, no field confirmation of the relative conditions of these suspect units is available. Therefore, no attempt was made to subjectively remove any additional data from consideration.

FIELD DATA AGGREGATION - TOTAL PROGRAM

Table 6.1 lists the number of field data points in each data class, the average COP for each data class, and the average operating conditions

corresponding to each average COP. The entire 643 unit-month data base is presented in Appendix C of this report.

Table 6.1

FIELD DEMONSTRATION DATA BREAKDOWN
AVERAGE OF ALL FIELD DATA BY CLASS

Data Class	Number of Unit Months	HPWH COP (avg)	Daily Water Consumption (avg gals)	Air Temp °F (avg)	Inlet Water Temp °F (avg)	Delivery Water Temp °F (avg)
1	194	1.95	72	71	61	140
2	306	1.97	76	72	60	140
3	143	1.81	67	69	62	138
All Data	643	1.93	73	71	61	140

As shown in Table 6.1, the average COP of all the units in the field demonstration program was 1.93. This COP translates to an average operating cost savings of 48.2% over resistance heating. The average COPs for Class 1, 2, and 3 data are 1.95, 1.97, and 1.81, respectively, translating to respective operating cost savings of 48.7%, 49.2%,and 44.8%.

The average water consumption for the sites in the field demonstration was 73 gallons per day for a data-averaged family size of 3.62. The average required temperature rise (inlet water temperature to delivery water temperature) was 79°F. This water consumption and required temperature rise equate to an average daily energy requirement of 47,635 Btu for water heating, not counting losses. The National Bureau of Standards estimates [4] that the average American family of four requires 64.3 gallons of water, heated over a 90°F temperature rise, daily. These NBS estimates equate to an average daily water heating energy requirement of 43,260 Btu, not counting losses, for a family size of 3.62. The average field demonstration site requirements are, therfore, about 10% higher than the NBS estimates, indicating that the average hot water usage for the field test site was reasonably close to the NBS estimate for the national average water heating energy consumption patterns.

The average COPs in Table 6.1 represent performances obtained by individual units operating over wide ranges of inlet water, delivery water, and ambient temperatures. It is desirable to know the sensitivity of a unit's performance to each of these three main operating parameters independently of one another (e.g., COP versus ambient temperature at a fixed inlet and delivery temperature). Once these sensitivities are known, performance as a function of these parameters may be plotted. Developing these field data correlations can be useful in several ways. For example, they can be used to predict the COP of a unit under a given set of operating conditions. These correlations may also be used to compare the performance of the field units to performances obtained in controlled laboratory tests.

Certain assumptions can be made concerning the sensitivity of performance to each operational parameter. For example, it is known from prior laboratory tests that COP increases as ambient temperature increases, and decreases as inlet and delivery water temperatures increase. In order to determine the magnitude of performance sensitivity to these parameters, it is necessary to correlate COP against each of these parameters. Developing these correlations from field data poses several problems. Ideally, each parameter correlation should be done with all other parameters fixed at some nominal level. This is because some parameters, particularly ambient and inlet water temperatures, are partially offsetting in terms of their effect on performance, yet tend to vary simultaneously in the same direction.

To achieve the desired correlations, it is necessary either to greatly delineate the data base or to adjust the data base. Delineation of the data base would involve selecting, for each correlation, only those COPs produced by units operating within the same noncorrelated parameters. For example, if a correlation of COP versus ambient temperature were desired, only COPs produced under the same inlet and delivery water temperatures could be used. Attempts at this type of delineation generally resulted in the removal of an unacceptably high percentage of the data base. As an alternate method, the decision was made to adjust the

data base by first fixing the noncorrelated parameters to nominal conditions -- defined as the average condition for that parameter, as shown in Table 6.1, rounded to the nearest 5° (e.g., ambient 70°F, inlet 60°F, delivery water 140°F) -- and then adjusting each COP by factors related to each fixed parameter's deviation from the nominal condition. These normalization factors were derived using the entire 643 unit-month data base in a least-squares regression fit to an equation of the form:

$$COP = A + B \times TA + C \times TI + D \times TH$$

where:

TA, TI, TH = the operating parameters of ambient, inlet water, and delivery water temperatures, respectively;
B, C, and D = performance sensitivity per °F change in each respective parameter;
A is a constant.

An expanded explanation of this method of analysis is presented in Appendix B of this report. The equation that best fits the 643 unit-month data base using this method is:

$$COP = 1.7000 + 0.01040 \times TA - 0.0015 \times TI - 0.0030 \times TH$$

The coefficients of TA, TI, and TH are, by definition, the change in performance that would be expected from a 1°F change in that particular parameter.

These coefficients were then used to "normalize" the data base by first fixing two of the three temperature parameters to the nominal conditions and then adjusting the individual COPs according to the deviation of each fixed parameter from the nominal condition. For example, to normalize a unit-month of data to a fixed delivery water temperature of 140°F and a fixed inlet water temperature of 60°F, the following equation is used:

$$COP_{normalized} = COP_{actual} + [(60°F - TI_{actual})(-.0015)] + [(140°F - TH_{actual})(-0.003)]$$

Adjusting all 643 field COPs in this manner resulted in a new data base for which the effects of varying inlet and delivery water temperatures had theoretically been eliminated. The COPs in this new base can be correlated to the unfixed parameter (ambient temperature in this case) so that performance as a function of this parameter can be plotted. The effects of ambient temperature may be removed from the data base by substituting $[(70°F - TA_{actual}) \times (.0104)]$ for one of the other parameter-normalizing segments in the above equation.

Figure 6.1 plots COP as a function of ambient temperature with all 643 COPs normalized for 60°F inlet water and 140°F delivery water. The data points shown in Figure 6.1 are normalized ambient-temperature-group average COPs that were developed from the full data base. Also shown in Figure 6.1 is a plot of COP versus ambient, at 60°F inlet and 140°F delivery water temperature, that was developed from laboratory tests of similar units, as presented in the Design Report [3] of this project. The performances of the field units are approximately 20% lower than those shown in the laboratory tests. The field units also appear to be slightly less sensitive to changes in ambient (.0104 ΔCOP per 1°F ΔTA) than indicated in the laboratory tests (.0133 ΔCOP per 1°F ΔTA).

Figure 6.2 plots COP as a function of inlet water temperature (ambient = 70°F, delivery = 140°F) for both the field units and the laboratory units. Here, again, field unit performances are approximately 20% lower than those shown in laboratory tests, and the field units are less sensitive to changes in inlet water temperature (.0015 ΔCOP per 1°F ΔTI) than the laboratory units were (.0048 ΔCOP per 1°F ΔTI).

There are three main reasons why the field units performed at COP levels 20% below the expected levels. The first is that the data base includes operating data from units that are believed to be in substandard condition. It is known that many units arrived in damaged condition, devoid of refrigerant charge. Following field repair, the amount of charge in each of these units was somewhat different because of the various methods of charging used by the local refrigeration technicians. Several units

Figure 6.1

COP VS AMBIENT AIR TEMPERATURE FOR INLET WATER = 60°F

DELIVERY WATER = 140°F

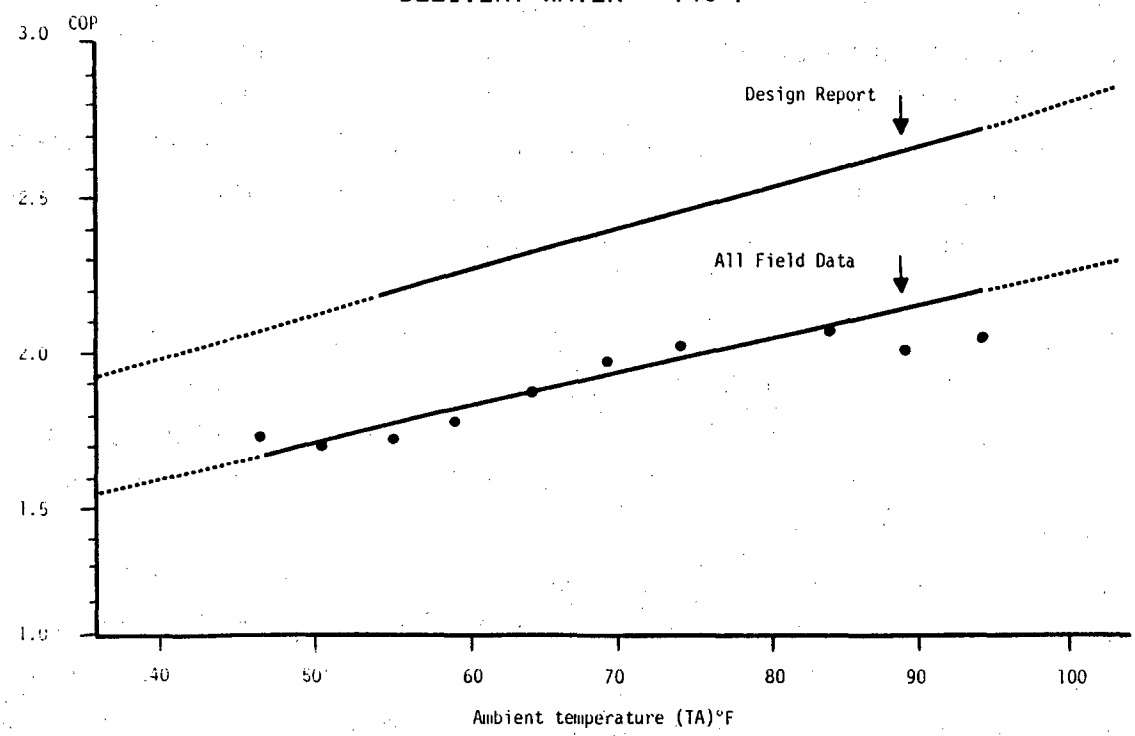

Figure 6.2

COP VS INLET WATER TEMPERATURE FOR AMBIENT = 70°F, DELIVERY WATER = 140°F

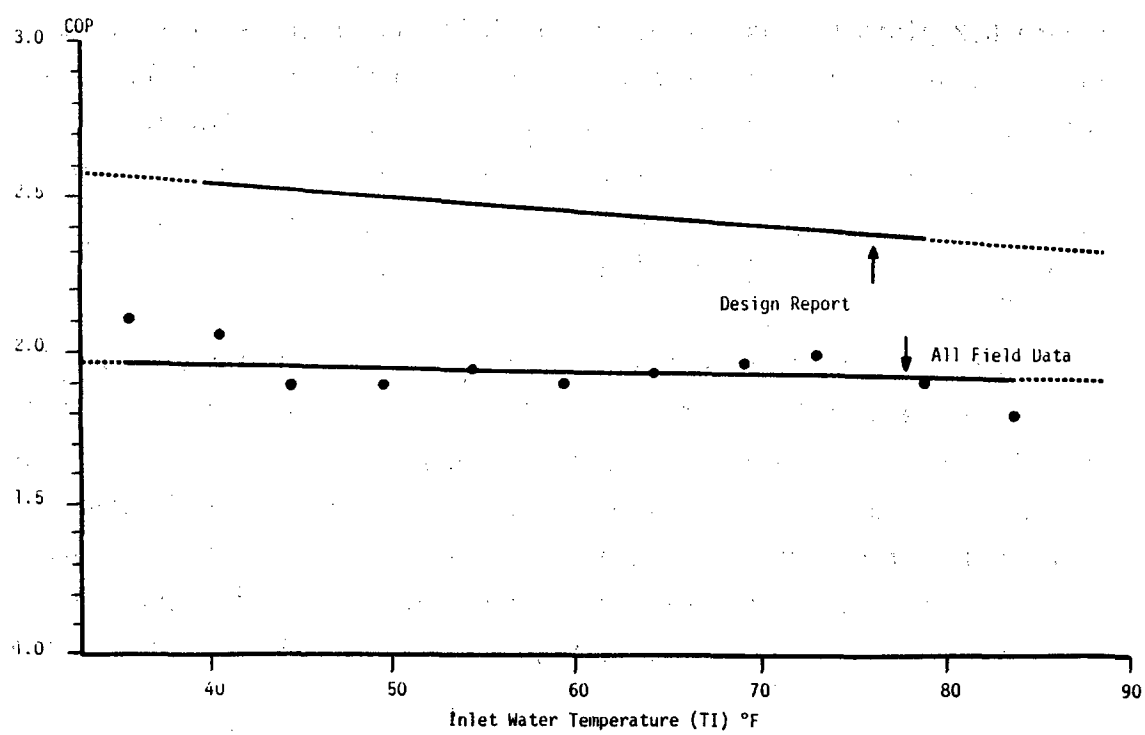

are known to have been operated for extended periods of time at low charge levels, and it is quite possible that compressor damage occurred as a result. Data from these suspect units were not removed from the data base, however, unless field confirmation concerning their condition was received. Therefore, the data aggregations and correlations presented herein are considered to represent conservative minimum performance expectations.

Another reason for the lower performance is that the laboratory tests were performed under controlled conditions with prescribed water use patterns within which no upper resistance element use occurred. In the field demonstration program, an average of 6.7% of the total heat pump mode energy was used by the upper resistance element. This element use can be attributed to high water demands at some sites and/or reduced heat pump heating capacities at sites with defective units. Resistance element usage was included in the monthly calculation of system COPs.

The third reason for the discrepancy between laboratory and field test results is that the laboratory tests were conducted over 10- to 14-hour periods depending upon the recovery rates of the units and, therefore, did not include the energy required to replace any post-test-period tank losses. The laboratory tests, therefore, were not completely representative of a daily use pattern. Because heat loss maintenance requires the system to operate at its least favorable sink conditions (highest condenser temperatures), the performance of the system during heat loss maintenance is lower than during recovery from a water withdrawal. If the laboratory tests had been conducted over a full daily cycle, the resultant performances would probably have been somewhat lower.

Figure 6.3 plots field unit COPs as a function of delivery water temperature with the data normalized for 70°F ambient and 60°F inlet water temperatures. Figure 6.3 shows that the field unit performance sensitivity to changes in delivery water temperatures is .003 ΔCOP per 1°F ΔTH. No corresponding laboratory curve is shown because the previous project design report did not address this question. The field demonstration project was

Figure 6.3

COP VS DELIVERY WATER TEMPERATURE FOR AMBIENT = 70°F, INLET WATER = 60°F

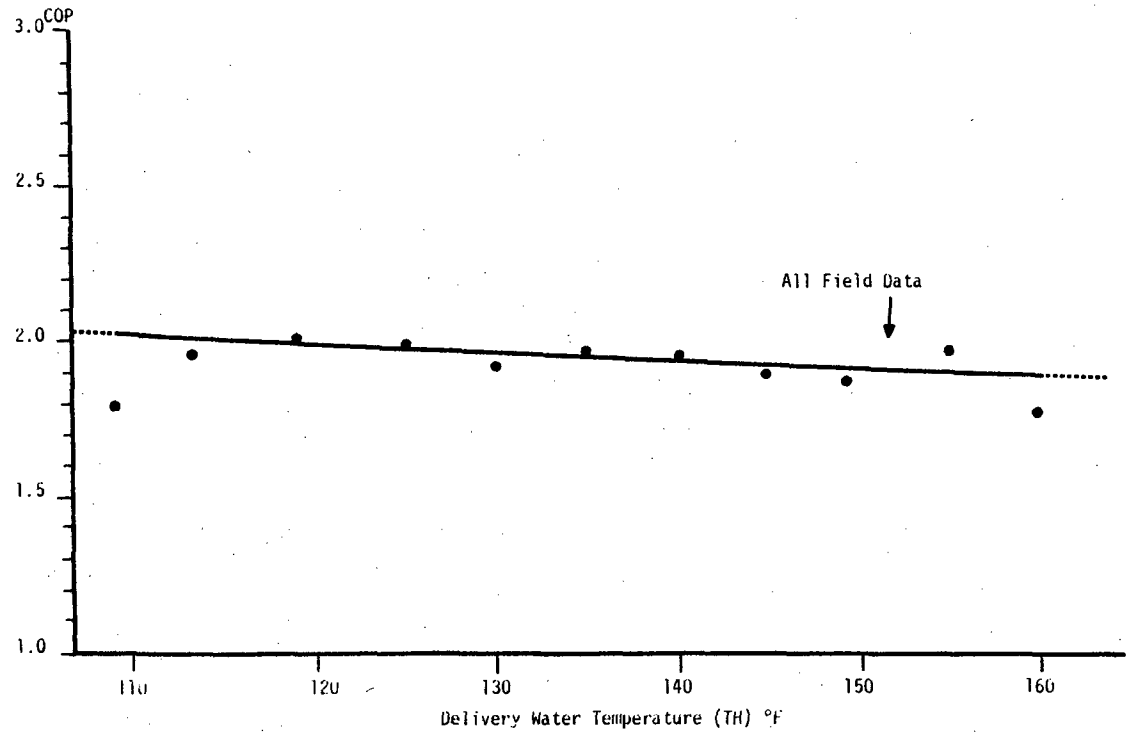

originally designed to eliminate any effects of delivery water temperature, and all units were factory pre-set to deliver 140°F water while in the heat pump mode. This predetermined control was only relatively successful in that 75% of all field operating data show delivery water temperatures of 140$\pm$5°F. The 25% that varied from this intended range represents units whose thermostats were re-set to match the preferences of the individual test participant, or under-capacity units that were, perhaps, incapable of meeting the delivery water temperature requirements. Because of the limited distribution of empirical data for the 110°F to 160°F range, shown in Figure 6.3, this data correlation is considered to be the least reliable correlation of COP versus operating parameter.

FIELD DATA AGGREGATION - BY UTILITY

The aggregations and correlations presented thus far have been performed using the entire 643 unit-month data base. It is of interest to segregate this data such that information pertaining to each individual utility may be presented. Table 6.2 presents a breakdown, by utility, of performances for each data class. These performances, listed in Table 6.2, are measured in effective overall COPs (EOCOPs) rather than in numerical average COPs. The distinction between the two is that the EOCOP represents cumulative savings as opposed to average savings. Because a COP is a ratio, monthly COPs for any given site or utility are not additive if the goal is to measure cumulative savings. For example, if a unit were to operate at a COP of 1.8 one month and at 2.2 the next month, it could be said that the unit operated at an average COP of 2.0 ($\frac{2.2 + 1.8}{2} = 2$). This, however, would be an inaccurate description of the total or cumulative energy savings for that two-month period. COPs may be converted to percentage of operational savings using the following relationship:

$$\% \text{ Operating Savings} = (1 - \frac{1}{COP}) \times 100\%$$

A COP of 2.0, obtained by using this relationship, would imply a 50% savings, a COP of 1.8 would imply a 44.4% savings, and a COP of 2.2 would imply a 54.5% savings. If, in this example, the home would have required 500 kWhs each month for resistance water heating, a HPWH with consecutive monthly COPs of 1.8 and 2.2 would have saved 222 kWhs (500 x 44.4%) and 272.5 kWhs (500 x 54.5%), respectively. Total savings for the two-month period would be 494.5 kWhs, or 49.5% of the total 1000 kWh resistance consumption. This cumulative 49.5% savings, when converted back into COP terms, becomes 1.98, which is slightly less than the two-month average COP of 2.0. The cumulative or effective overall COP (1.98 in this example) is similar in its derivation to the seasonal performance factor (SPF) of a space heating heat pump.

The EOCOPs listed in Table 6.2 were derived taking these relationships into account. An expanded table, showing individual unit EOCOP derivations may be found in Appendix C of this report.

Table 6.2

FIELD DEMONSTRATION DATA BREAKDOWN - EFFECTIVE OVERALL COPs BY UTILITY

Utility	Effective Overall COP			
	Class 1 Data	Class 2 Data	Class 3 Data	All Data
Arizona Public Service	---	1.89	---	1.89
Bonneville Power Administration	1.68	2.08	1.84	1.97
Duke Power	1.99	1.84	1.66	1.84
Florida Power & Light	2.07	2.04	1.70	1.77
Guadalupe Valley	1.74	1.84	1.93	1.79
Gulf Power	1.95	2.03	1.97	2.00
Hawaiian Electric	2.06	2.01	---	2.03
Indianapolis Power & Light	1.89	1.86	1.95	1.87
Kansas Gas & Electric	1.92	1.99	1.80	1.93
Kansas Statewide Cooperatives	2.14	2.05	1.83	1.81
Mississippi Power & Light	1.80	1.67	---	1.74
New York State Electric & Gas	1.78	1.77	1.70	1.76
Pacific Gas & Electric	1.59	2.12	1.38	2.02
Portland General Electric	1.90	2.10	---	2.00
Public Service Indiana	1.93	2.05	2.08	2.01
Somerset Rural Electric	1.83	1.70	1.69	1.70
Southern California Edison	---	1.80	1.79	1.80
South Carolina Electric & Gas	1.92	1.88	1.49	1.85
Tennessee Valley Authority	1.86	1.81	1.75	1.83
Valley Rural Electric	---	2.12	1.68	2.02

The EOCOPs shown in Table 6.2 range from a utility low of 1.70 (all classes of data considered), or 41.2% cumulative operating savings, to a utility high of 2.03, or 50.7% cumulative savings. Attempts were made to develop some correlation of performance as a function of geographic or climatic region, but no such correlation could be established using the full data base. For example, the six utilities that are situated in the mildest climate zones (Hawaiian Electric, Southern California Edison, Arizona Public Service, Guadalupe Valley Electric Cooperative, Gulf Power, and Florida Power and Light), defined as zones with 2000 heating degree-days or less, showed the exact same group average EOCOP as the six utilities situated in zones of 5000 heating degree-days or more (Bonneville Power Administration, Indianapolis Power and Light, Public Service of Indiana, Somerset Rural Electric, Valley Rural Electric, and New York State Electric and Gas). This lack of correlation demonstrates, since most of the units were installed in unconditioned areas within the homes, that the ambient temperature around the unit does not necessarily correspond to the outdoor ambient temperature. The unit site conditions will be examined in more detail later in this section.

Although the EOCOPs shown in Table 6.2 provide indications of overall performances, the true measurement of the viability of the HPWH is the amount of energy savings and, hence, the operating cost savings that the units are capable of providing. Table 6.3 presents a summary of average household annual energy savings due to the operation of a HPWH in place of a resistance water heater. The kilowatthour figures presented in this table are based on one-year extrapolations of the average daily kilowatthour requirements derived in the preparation of Table 6.2. These average utility load requirements are also presented in detail, by site, in Appendix C of this report.

Table 6.3 shows that the average household in the test program consumes 6256 kWhs per year for resistance water heating. Replacing this resistance water heater with a HPWH reduced the average energy requirements to 3339 kWhs per year, resulting in an annual energy savings of 2917 kWhs.

Table 6.3

FIELD DEMONSTRATION DATA BREAKDOWN - AVERAGE HOUSEHOLD ANNUAL ENERGY SAVINGS BY UTILITY

Utility	Average Household Annual Energy Consumption (kWh) Resistance	Heat Pump	Average Household Annual Energy Savings (kWh)
Arizona Public Service	2884	1522	1362
Bonneville Power Administration	7453	3760	3693
Duke Power	8023	4344	3679
Florida Power & Light	6165	3635	2530
Guadalupe Valley	6077	3526	2551
Gulf Power	5041	2515	2526
Hawaiian Electric	8873	4318	4555
Indianapolis Power & Light	6409	3409	3000
Kansas Gas & Electric	6012	3099	2913
Kansas Statewide Cooperatives	4457	2427	2030
Mississippi Power & Light	5044	2957	2087
New York State Electric & Gas	6347	3624	2723
Pacific Gas & Electric	7041	3500	3541
Portland General Electric	8508	4271	4237
Public Service Indiana	5971	3008	2963
Somerset Rural Electric	6158	3566	2592
Southern California Edison	6059	3318	2741
South Carolina Electric & Gas	5230	2935	2295
Tennessee Valley Authority	7369	3960	3409
Valley Rural Electric	5990	3088	2902
AVERAGE	6256	3339	2917

These average annual savings ranged form a utility low of 1362 kWh per household to a utility high of 4555 kWh per household. This wide variance is primarily due to differences in total water consumption and to required temperature rises within the test group. Since these numbers represent the average consumption of small test samples (5 households or less) at each utility, they do not represent statistically valid averages from which definitive conclusions concerning average consumptions may be drawn. The individual consumption figures in Table 6.3, therefore, are not necessarily typical or representative of the average customer for that utility. They do, however, represent the range of consumptions that could be expected on a nationwide basis.

This information on energy savings will be expanded later in this section to reflect operating cost savings ($/year), and will be applied to an economic evaluation of the HPWH.

SPACE HEATING AND COOLING LOAD IMPACTS

One of the questions that the field demonstration was designed to address concerns the impacts that a HPWH would have on the space heating and cooling (HVAC) loads of a house. The HPWH has the potential for negatively affecting the space heating and positively affecting the space cooling loads of the house. This potential exists because the unit operates by removing heat from the air. If this heat was provided by or replaced by the home heating system, the unit is effectively "stealing" useful energy and, theoretically, increasing the heating load of the house. During the cooling season, the reverse is possible. If the heat that the unit removes from the air normally would have been removed by the home air-conditioning system, the unit is providing free air conditioning and theoretically, reducing the cooling load of the house.

The scenario described above represents the extreme cases possible, in terms of load impact, and implies that the unit is installed in a fully conditioned space within the house. The operation of the unit in such an

environment could have two different measurable effects, depending upon the dynamics of HVAC system control and air circulation. If the unit were installed in a relatively small, confined area, heated and cooled by a central ducted system, it is conceivable that the operation of the unit would not affect the HVAC system at all (or only slightly) in terms of kilowatt-hours consumed. The measurable impact of the unit would, instead, be the creation of a cool, dry zone within the home, which is neither fully sensed nor compensated for by the HVAC system. If, on the other hand, the unit were installed in a larger, open or well-controlled area with its own thermostat, the expected result would be a measurable increase or decrease in energy consumed by the HVAC system. This is because the HVAC system would be capable of directly sensing and compensating for the heat removed by the HPWH. In this case, no cool zones would be created.

In either case, the seasonal and annual HVAC impacts of the HPWH in a fully conditioned space can be calculated (or predicted) using a relatively simple modeling technique. The HPWH is considered to be an "internal heat loss" and may be handled, in load calculations, in much the same fashion that internal heat gains are handled. The overall seasonal impact would then be a function of both the type of HVAC system and the relationship between total cooling and heating loads.

For example, if the HVAC system were a heat pump, the overall impact would be expected to be slightly negative in a cold climate and slightly positive in a warm climate. If the HVAC system were an electric furnace and an air conditioner, the cold climate overall impact would be more negative and the warm climate overall impact would be less positive. The difference results from the relative heating efficiencies of a heat pump and an electric furnace. Total overall impacts may also be affected by differences in air conditioner EERs.

While the full impact (fully conditioned space) scenario is the easiest to model, it represents the least common of the installation practices.

Only about 8% of the field test units were installed in fully conditioned spaces, and most of these installations were in mild, southern climates. Seventy-nine percent of the field demonstration units were installed in unconditioned basements, attached or integral garages, or utility rooms, and the remaining units were installed out-of-doors or in unattached garages. While it is possible that units installed in these types of environments can negatively or positively affect HVAC system loads, the level of impact, if any, is far more difficult to predict through purely calculational means.

Each instrumentation package used in the field demonstration (see Section 4 of this report) included two kilowatthour meters, designated M_4 and M_5, that monitored the energy consumption of the home HVAC system. M_4 measured HVAC system kilowatthour consumption when the HPWH was in the heat pump mode and M_5 measured this consumption when the HPWH was in the resistance mode. It was originally felt that any differences in total M_4 and M_5 consumption over the course of the monitoring period would be attributable to the operation of the heat pump. If, for example, M_4 readings exceeded M_5 readings and the system operated for the same number of days in each mode, then the HPWH was assumed to have negatively affected the HVAC system by $(M_5 - M_4)$ kWh. Conversely, if M_4 readings were less than M_5, then the HPWH would have positively affected the HVAC system by $(M_5 - M_4)$ kWh. However, there are two potential problems associated with this monitoring technique. This method only considers energy consumption differences and does not consider the more subjective effects of creating cool, dry zones within the home. It also assumes that, on the average, weather conditions during the two modes of operation were essentially equal. Actually, HVAC load variations cause some difference in M_4 and M_5 independent of HPWH-induced differences. This latter consideration was thought to be less of a factor in the earlier stages of the field demonstration when the units were on a daily mode shift schedule. It was felt that, since the units alternated modes daily, the effects of variations in climate-induced HVAC loads would average out for the two modes of operation when the data were evaluated on a seasonal basis. When the units were placed under a weekly mode shift schedule, the probability of natural, weather-induced differences occurring

in M_4 and M_5 increased, which is probably the main reason for our inability to draw any valid conclusions from these data. The remainder of this discussion describes the approach used in our unsuccessful attempt to evaluate the HVAC energy consumption data.

Prior to analyzing the M_4 and M_5 data, all units were organized into four categories according to their installation characteristics. The types of installation were defined as: Type 1 - unit installed in a fully conditioned space, Type 2 - unit installed in an unconditioned basement, Type 3 - unit installed in an unconditioned space that is laterally attached to a conditioned space, and Type 4 - unit installed in an unconditioned space that is not attached to any conditioned space. As mentioned previously, 8% of the test units were installed in fully conditioned spaces (Type 1). Forty-four percent of the installations were classified as Type 2, 35% as Type 3, and 13% as Type 4. This classification technique was developed so that the HVAC impacts could be evaluated as a function of the location of the HPWH in the home.

The following criteria were established to determine which site data would be used in an evaluation of the HPWH impact on space heating loads:

1. A minimum of 90 days of operating data within the period November 1 to March 1 (assumed heating season) must be available.
2. The site being evaluated must have an electric heating system (heat pump, zoned baseboard, electric furnace, etc.) so that M_4 and M_5 information can be obtained.
3. The site must be free of mode shift difficulties during the period under consideration.

Cooling load impacts were evaluated in much the same fashion as heating load impacts. The following criteria were established to determine which site data would be used for evaluation:

1. A minimum of 75 days (2.5 months) of operating data within the period June 1 to October 1 (assumed air

conditioning season) must be available.

2. The site being evaluated must have an electric air conditioner or heat pump.
3. The site must be free of mode shift difficulties during the period under consideration.

Application of these criteria resulted in the removal of data for all but 29 sites for heating and 23 sites for cooling load evaluations. Analysis of the data for these sites implied that the operation of the HPWH actually reduced the heating loads and increased the cooling loads at several sites. Since such results contradict logical trends, two additional criteria were established for HVAC impact analysis. The criteria for heating load impact are:

4. Any differential space heating energy ($M_5 - M_4$) must indicate an increase in space heating energy consumption during heat pump mode operation.
5. The differential energy must be equal to or less than the energy extracted by the HPWH.

The criteria for cooling load impact are:

4. Any differential space cooling energy ($M_5 - M_4$) must indicate a decrease in space cooling energy consumption during heat pump mode operation.
5. The differential energy must be equal to or less than the energy extracted by the HPWH.

Applying heating load criterion #4 resulted in the removal of data for 11 additional sites from consideration, leaving 18 sites for the heating load impact analysis. Applying cooling load criterion #4 resulted in the removal of 10 sites from the data base, leaving 13 sites for the cooling load impact analysis. Applying the fifth criterion for both loads eliminated all but 6 heating load and 5 cooling load sites from the data base.

The resulting data base is too limited to draw any valid, quantitative conclusions concerning the HPWH impact on heating and cooling loads. From a qualitative point of view, the trends indicate that units installed in fully conditioned spaces affect heating loads negatively and cooling loads

positively, while units installed in unconditioned areas show little or no impact. However, no quantification of these trends was possible.

PARTICIPANT INTERVIEW

In February 1981, participant interview questionnaires were distributed to the 85 consumers in whose homes the HPWHs were installed. These questionnaires were designed to gather subjective information from the test participants concerning their satisfaction or dissatisfaction with the units. The form contained questions covering seven general topics ranging from system noise level to perceived worth of the system. Additional space was provided on the questionnaire for consumer suggestions, complaints, and comments. Sixty-six questionnaires were completed and returned prior to the established deadline. A copy of this questionnaire with a breakdown of all responses is presented in Appendix A of this report.

The first question asked the consumer to compare the test system with his previous system in terms of its ability to meet hot water requirements. This question was intended to serve as an indicator of any previously unidentified system problems. Because the tank capacity of the HPWH (82 gallons) was almost always greater than that of the consumer's previous system, any response that rated the HPWH lower than the previous system could be indicative of a system problem. Eighty-eight percent of the respondents rated the HPWH equal to or better than their previous system for hot water availability. Data for the units that could not meet requirements as well as the original systems were examined. In all cases, the inability to meet hot water requirements was the result of a malfunction, or because the consumer used large quantities of water and previously had a system whose capacity (water and/or heating rate) exceeded that of the HPWH

Question number two solicited consumer reaction to the noise level of the HPWH. Sixty-five percent of the respondents indicated that the noise was no problem or was undetectable, 17% considered the noise level to be a problem, and 18% considered it to be annoying.

Question number three concerned consumer reaction to the air temperature in the area of the water heater. Thirty-eight percent of the respondents indicated that they considered the cool air to be beneficial, 42% said that it made no difference, and 12% disliked it. Eight percent of the respondents gave seasonally conditional responses, saying that they liked it in the summer but not in the winter.

Question number four concerned the dehumidification effects of the HPWH. Forty-five percent found the dehumidification to be helpful or very helpful, 52% said it made no difference, and 1% found it to be undesirable or highly undesirable. Two percent gave seasonal responses, saying that the dehumidification was undesirable in the winter but very helpful in the summer.

The responses to questions two, three, and four would be expected to vary as a function of the location of the HPWH within the home. Because these three questions cover areas of potentially negative effects of the HPWH operation on the consumer, any correlations that could be established would be helpful in selecting optimum installation locations within the home.

The completed questionnaires were segregated according to the location of the unit in the home. The site types used were the same as those described in the previous section on heating and cooling load impacts (Type 1 - fully conditioned spaces, Type 2 - unconditioned basements, Type 3 - unconditioned spaces laterally attached to conditioned spaces such as garages and utility rooms, and Type 4 - unconditioned unattached spaces). The possible responses to these three questions enabled the consumer to indicate the degree of negative or positive reaction to the HPWH operation, or to indicate neutrality on the specific question (neither positive nor negative reaction). Table 6.4 shows the results obtained by segregating responses according to installation type.

On the issue of noise level, Table 6.4 shows a predictable trend, in that the level of objection to increased noise levels is directly proportional

Table 6.4

HPWH FIELD DEMONSTRATION - QUESTIONNAIRE RESPONSES*
ACCORDING TO INSTALLATION TYPE

	All Respondents	Type 1	Type 2	Type 3	Type 4
Noise Level:					
No Impact	65%	33%	58%	72%	71%
Negative Impact	35%	67%	42%	28%	29%
Air Temperature:					
No Impact/Pos. Impact	84%	50%	75%	91%	100%
Negative Impact	16%	50%	25%	9%	0%
Dehumidification:					
No Impact/Pos. Impact	98%	100%	94%	100%	100%
Negative Impact	2%	0%	6%	0%	0%

* Seasonally conditioned responses prorated

to the unit's proximity to the living space. Sixty-seven percent of the Type 1 site respondents found the HPWH noise level to be objectionable. This objection level dropped to 42% for units installed in basements (Type 2), 28% for Type 3 installation units, most of which were in attached garages, and 29% for Type 4 installation units. This trend implies that consumer acceptance of the HPWH would be enhanced if noise levels could be reduced.

The responses concerning air temperature changes show a similar trend in terms of the HPWH's potential for negatively or positively affecting the consumer. Fifty percent of the Type 1 respondents found the air temperature changes to be objectionable. (Seasonally conditioned responses were prorated as both negative and positive responses.) This objection level dropped dramatically to 25% for Type 2, 9% for Type 3, and 0% for Type 4 sites.

On the question of dehumidification there was near unanimity in the responses, showing 100% acceptance for all site types but Type 2. The 6% negative response for this site type represents one respondent who found the dehumidification effect to be highly undesirable and one who gave a seasonally conditional response.

It would be of interest to further separate the responses to questions three and four according to climate but, given the limited sample size, it was felt that further delineation would diminish the statistical validity of the answers.

Overall, the majority of respondents were either unconcerned by or felt positively about the operation of the HPWH in terms of noise, air temperature, and humidity.

Questions five, six, and seven explored consumer perception of the worth of the HPWH. Question number five asked if the HPWH saved the consumer any money. Seventy-seven percent of the respondents acknowledged operating savings, 9% perceived no difference in operating cost, 3% claimed to have lost money, and 11% did not answer the question. Question six asked how much money the consumer would be willing to pay for a HPWH over and above the cost of a standard electric water heater. All but 17% of the respondents indicated that they would be willing to pay more for a heat pump water heater. Twelve percent responded that they would pay over $400 more, 57% would pay between $100 and $400 more, and 12% would pay less than $100 more. Two percent did not answer the question. Question seven asked the participants to rate the HPWH overall performance compared with their previous systems. Sixty-seven percent rated the HPWH as better or much better, 26% said both systems were about the same, and 6% gave their previous systems a superior rating. One percent gave no answer.

Many participants offered suggestions and comments for improving the HPWH. Among the more common suggestions were: improving the condensate tray, adding more insulation to the water tank, providing for easier tank

draining, and adding an air intake filter. Most of these features have already been incorporated into units constructed after the test units were built.

ECONOMIC ANALYSIS

The economic viability of the HPWH is a function of two major factors: its cost to the consumer and the level of operating savings it produces for the consumer. Both of these factors must be considered relative to a standard residential water heater (base system). The cost that the consumer must consider, therefore, in an evaluation of the HPWH is the difference in installed costs (ΔIC) plus any differences in owning costs between the HPWH and the base system. Likewise, the operating savings is the difference in operating costs between the HPWH and the base system. For the sake of simplicity, the base system is assumed to be a standard, 82-gallon, electric resistance storage water heater.

The operating performances of the field test units, along with the information developed on kilowatthour savings (Tables 6.1, 6.2, and 6.3), may be used to calculate ranges of expected operating cost savings as a function of varying energy rates.

Table 6.3 showed average energy savings ranging from 1362 kWh to 4555 kWh per year and an average annual savings of 2917 kWh. Translating this range of energy savings into cost savings requires the application of an energy cost range in terms of $/kWh.

Since electricity rates vary widely in different parts of the country, this range of energy savings can result in an even wider range of cost savings. Assuming a national range of electric rates of from $.02/kWh to $.10/kWh, the range of kilowatthour savings could conceivably correspond to a cost savings range of $27 to $456 per year. This resultant wide range of cost savings demonstrates that the savings obtained by using a HPWH is a function of not only its performance in terms of EOCOP, but also the total base energy normally required for water heating and the per-unit cost of this energy. If the field demonstration average

annual savings of 2917 kWh were applied to an assumed average cost per kilowatthour of $.05, then the average participant in the program would realize operating cost savings of $146 per year.

One of the easiest methods of examining the economics of an investment is to calculate simple payback (n), which is defined as the difference in first costs (ΔIC) divided by the difference in annual operating cost (ΔAOPC). Figure 6.4 plots simple paybacks, in years, for the HPWH as functions of COP (curve #1), base system energy requirements (curve #2), and cost of energy (curve #3). Because the ΔIC for a HPWH fluctuates significantly, depending upon the model and the channel of distribution, and because these systems are expected to drop in price as manufacturing volume increases, it is difficult to select a ΔIC that is meaningful. The paybacks shown in Figure 6.4 are, therefore, expressed in terms of years to payback per $100 ΔIC.

The three plots in Figure 6.4 demonstrate the sensitivity of system economy to changes in the three main components of operating cost. Each curve is designed to show this sensitivity over the range of values experienced by one component in the field demonstration program, with the other two components fixed at average conditions. The EOCOPs (Table 6.2) ranged from 1.70 to about 2.1, with an average EOCOP of slightly under 1.90. The base system consumptions (Table 6.3) ranged from 3884 kWh to 8873 kWh, with an average consumption of 6256 kWh per year. Although a quantification of each consumer's energy cost was not within the scope of the field demonstration, an informal survey of utility participants showed residential rates ranging from about $.02/kWh to over $.10/kWh, with an average rate of slightly less than $.05/kWh.

Curve #1 in Figure 6.4 shows payback as a function of EOCOP, within the range of 1.70 and 2.10, for a fixed base consumption of 6000 kWh/yr and a fixed electric rate of $.05 per kWh. The resultant curve is relatively flat within this range, which implies that system economics are relatively insensitive to further increases in EOCOP.

Figure 6.4

PAYBACK AS A FUNCTION OF OPERATING COST COMPONENTS

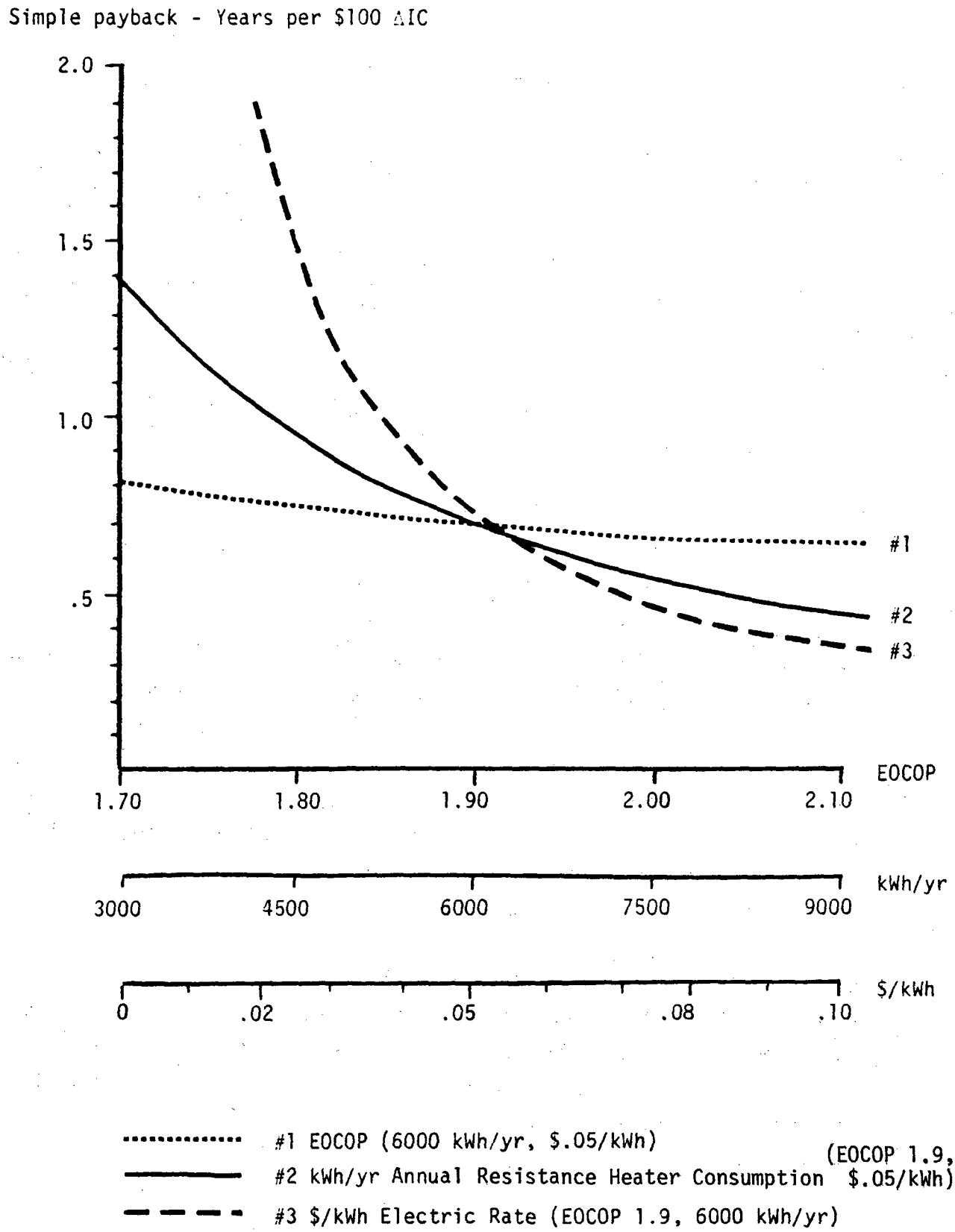

Curve #2 in Figure 6.4 shows payback as a function of base system energy consumption within the range of 3000 to 9000 kWhs per year. EOCOP is fixed at 1.90 and the rate is again fixed at $.05/kWh. The resultant curve shows that system economics are more sensitive to increases or decreases in base energy use than to EOCOPs within the identified ranges.

Curve #3 in Figure 6.4 shows payback as a function of electric rates within the $.02/kWh to $.10/kWh range, with EOCOP fixed at 1.90 and base energy consumption fixed at 6000 kWhs/yr. The resultant curve shows that system economics are more sensitive to changes in electric rates than to either of the other two operating cost components.

Applying all of the averages of 6000 kWh/yr, EOCOP of 1.9, and $.05/kWh yields a simple payback of 0.7 years per $100 in ΔIC. Assuming a present day ΔIC of $600 for the HPWH, the average consumer would realize a payback of 4.2 years.

The relationships developed thus far indicate that the economics of the HPWH will improve dramatically in the near future. As mentioned, the typical ΔIC for the system is expected to drop somewhat or, at least, stabilize once large-scale production commences. Increases in EOCOP are expected as the HPWH design is further refined, resulting in an increased percentage of energy savings, but the actual kilowatthour savings on an average basis may remain relatively constant if future reductions in family size and increased energy awareness bring about further reductions in base system energy requirements. The most dramatic improvement in system economics will come from future increases in energy rates. As demonstrated in Figure 6.4, system economics are more sensitive to changes in electric rates than to any other operating cost components. The average cost per kilowatthour is one component that is almost certain to increase significantly.

REFERENCES

1. Research and Development of a Heat Pump Water Heater, Volume 1, Final Summary Report, ORNL/Sub-7321/1, prepared for Oak Ridge National Laboratory by Energy Utilization Systems, Inc., August 1978.

2. Research and Development of a Heat Pump Water Heater, Volume 2, R & D Task Reports, ORNL/Sub-7321/2, prepared for Oak Ridge National Laboratory by Energy Utilization Systems, Inc., August 1978.

3. Demonstration of a Heat Pump Water Heater, Volume 1, Design Report, ORNL/Sub-7321/3, prepared for Oak Ridge National Laboratory by Energy Utilization Systems, Inc., December 1979.

4. "Test Procedure for Water Heaters." Federal Register, Vol. 42, No. 192, Section B.6, October 4, 1977.

APPENDIX A

DATA COLLECTION FORMS

Data Reporting Form	A-1
Project Input Data Form	A-3
Participant Interview Form	A-6

TEMCOR HEAT PUMP WATER HEATER FIELD DEMONSTRATION

DATA REPORTING FORM

IMPORTANT: This is the revised data reporting form, to be used effective November 20, 1979. Please discard any blank copies of any earlier data forms you may have and replace them with this form.
PLEASE COMPLETE ALL SECTIONS OF THE FORM FOR EACH REPORTING PERIOD.
DATA FORMS AND TAPES SHOULD BE RETURNED TOGETHER WHENEVER POSSIBLE.

Name of Utility _____

Installation Number _____

Monitoring Period: From _____ To _____

(Please indicate month, day, year)

CUMULATIVE METER READINGS: (Please take reading just prior to mode switch and indicate actual reading rather than difference)

Reading Date	Operating Mode at Time of Reading	Resistance M1	Heat Pump M2	Backup Resistance M3	M4	M5	Water Meter

DATE AND TIME OF RUSTRAK RECORDER TAPE INSTALLATION: _____

DATE AND TIME OF RUSTRAK RECORDER TAPE REMOVAL: _____

(Please also mark the above items on the tape if possible)

IF TAPE RAN OUT, JAMMED, OR OTHER PROBLEMS OCCURRED DURING THE PERIOD, PLEASE INDICATE AND NOTE DATES AND TIMES IF AVAILABLE _____

_____

EXTENDED POWER OUTAGES: FROM _____ TO _____ (Dates and Times)

FROM _____ TO _____ (Dates and Times)

DATA REPORTING FORM - PAGE 2

Unit is on ☐ weekly ☐ daily cycle

Unit is set to shift modes at _____(time) on _____(day of week)

Temperature Checks (Monthly Manual-to-Rustrak Correlations)

Date and time of manual temperature reading_____at __:__ AM PM

	Manual Reading	Rustrak Reading
Ambient	_____°F	_____°F
Delivery H_2O	_____°F	_____°F
Inlet H_2O	_____°F	_____°F (if installed)

PLEASE ALSO RECORD MANUAL READING ON RUSTRAK TAPE AT TIME OF READING

Is Rustrak showing correct time? ☐ yes ☐ no

(If no, enter correct time of day and date on tape and reset)

Control Timer (Inside Instrumentation Panel)

Was timer showing correct time? ☐ yes ☐ no

Was timer showing correct day? ☐ yes ☐ no
(6:00 position of star wheel)

If no to either of the above, specify variance _____

_____

RESET TIMER IF NECESSARY

PROJECT INPUT DATA FORM

1. Name of Utility _____

2. Utility contact _____ Phone: _____

3. Name of consumer _____ Installation # _____

4. Address of consumer _____

   _____

5. Style of house:

   a. ☐ Ranch ☐ Two story ☐ Split level

   b. ☐ Basement ☐ Crawl Space ☐ Slab

   c. ☐ Integral garage ☐ Attached garage ☐ Carport

   Other _____

   d. Utility room ☐ Yes ☐ No

   e. Furnace room ☐ Yes ☐ No

   f. Insulation in:

      Walls _____ inches

      Ceiling _____ inches

      Floor _____ inches

      Basement _____ inches

   g. Windows: ☐ Wood ☐ Metal

      ☐ Single pane ☐ Dual pane ☐ Storm

   h. Portion of basement wall below grade:

      ☐ 25% ☐ 50% ☐ 75% ☐ 100%

6. Family size: _____ Adults

   _____ Children

7. Normal thermostat settings:

   Winter: Day _____ Night _____

   Summer: Day _____ Night _____

8. Type of present water heater:

   ☐ Electric ☐ Gas ☐ Oil

9. Size of present water heater:

   ☐ 40 gallon ☐ 52 gallon ☐ 66 gallon

   ☐ 82 gallon ☐ Other _____

10. If electric, size of elements:

    Top _____watts

    Bottom _____watts

11. Estimate number of times per year running out of hot water _____.

12. Type of heat pump water heater installed:

    ☐ New ☐ Retrofit

13. Location of installation:

    ☐ Utility room ☐ Furnace room ☐ Basement

    ☐ Other _____

14. Size of room: _____ft. by _____ft.

15. a. Area exposed to outside, earth or unconditioned space:

    Walls _____sq. ft. Floor _____sq. ft.

    Ceiling _____sq. ft. Windows and doors_____sq. ft.

    b. Area exposed to conditioned space:

    Walls _____sq. ft. Floor _____sq. ft.

    Ceiling _____sq. ft. Windows and doors _____sq. ft.

INSTALLATION SKETCH SHEET

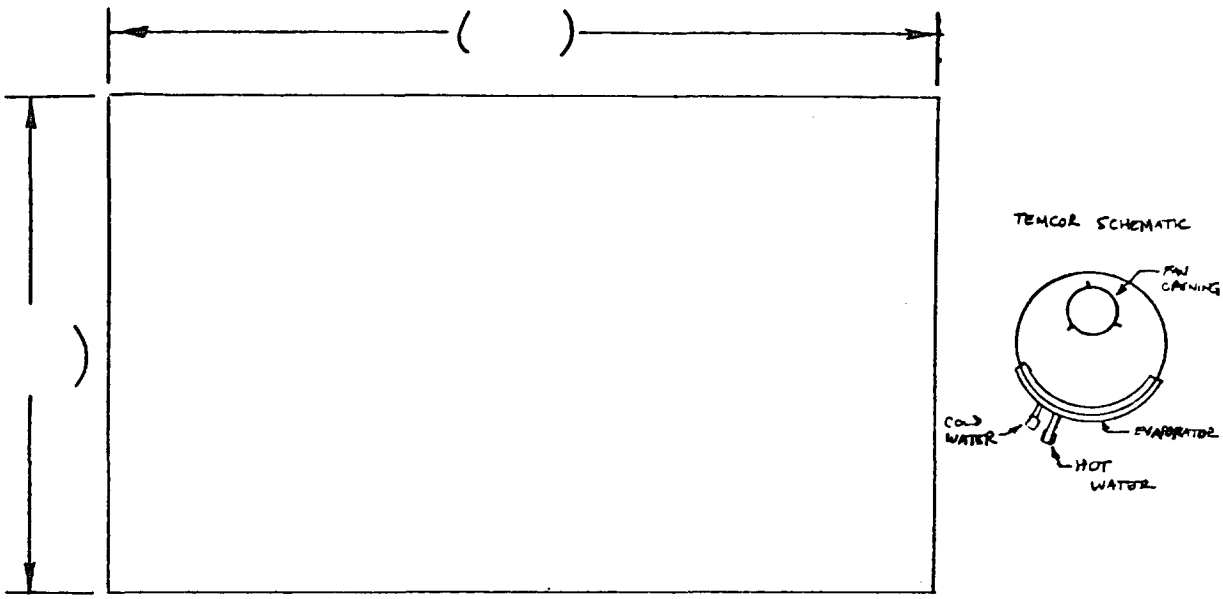

1. Indicate dimensions of smallest enclosed space surrounding heat pump water heater.

2. Indicate, for each wall, whether it is an inside wall (IW) or outside wall (OW).

3. Indicate any doorways, walkways, or windows that are normally open.

4. Indicate any heat sources, such as furnaces, heat vents, clothes dryers, etc.

5. Show location and orientation of TEMCOR by sketching a schematic similar to the one shown above (or cut out schematic and tape on a diagram).

6. Indicate location of ambient air thermocouple with an "X" on the diagram, and indicate the approximate height from the top of the unit.

7. Indicate location of delivery (hot) water thermocouple and source water thermocouple (if applicable), with arrows pointing to the pipes.

EUS USE ONLY:
APF _____
DC _____
UC _____
SR _____
_____

Questionnaire responses are given in percentages.

PARTICIPANT INTERVIEW

Department of Energy Heat Pump Water Heater Field Demonstration

NAME: _____ UTILITY SITE #: _____

ADDRESS: _____

DATE: _____

1) How often did you run out of hot water using your previous system (A), using the test system (B)?

A. Previous System	B. Test System
53% ☐ Never	62% ☐ Never
23% ☐ Rarely	27% ☐ Rarely
21% ☐ Periodically	5% ☐ Periodically
2% ☐ Frequently	6% ☐ Frequently
1% ☐ Constantly	☐ Constantly

2) How was the noise level of the water heater?

3% ☐ Undetectable
62% ☐ No problem
17% ☐ Small problem
18% ☐ Annoying
☐ Unbearable

3) How was the air temperature in the area of the water heater?

5% ☐ Greatly improved
33% ☐ Better
42% ☐ Made no difference
12% ☐ Worse
☐ Much worse

8% Better summer, worse winter

4) How was the dehumidification effect?

6% ☐ Very helpful
39% ☐ Helpful
52% ☐ Made no difference
0% ☐ Undesirable
1% ☐ Highly undesirable

2% Very helpful summer, undesirable winter

(over)

5) Did the system save you money?

35% ☐ Saved very much
42% ☐ Saved a little
9% ☐ No difference
3% ☐ Lost a little
☐ Lost very much

11% No answer

6) Assuming a replacement electric water heater cost of $150, how much more would you be willing to pay for a heat pump water heater?

17% ☐ No more
12% ☐ Less than $100
24% ☐ $100 - $200
15% ☐ $200 - $300
18% ☐ $300 - $400
9% ☐ $400 - $500
3% ☐ Over $500

2% No answer

7) Compared to your previous system, how would you rate the test system?

35% ☐ Much better
32% ☐ Somewhat better
26% ☐ About the same
6% ☐ Not as good
☐ Much worse

1% No answer

8) Do you have any suggestions, complaints, or other comments?

_____
_____
_____
_____
_____
_____
_____
_____
_____
_____

APPENDIX B

DATA ANALYSIS

Correction Calculation Procedure	B-1
Data Correction Program Listing	B-7
Linear Regression Method for Estimating the Dependence of COP on Temperature	B-11

CORRECTION CALCULATION PROCEDURE

Basis of analysis: water delivery conditions from heat pump mode

Definition of Terms

M_1 = kWh used in resistance mode over a period of D days (from meter reading)

M_2 = kWh used by heat pump over a period of D days (from meter reading)

M_3 = kWh used by upper element over a period of D days (from meter reading)

D = period in days between meter readings = $(D_R + D_H)$

D_R = days water heater operates in resistance mode

D_H = days water heater operates in heat pump mode

T_R = average delivery temperature of hot water in resistance mode (°F)

T_H = average delivery temperature of hot water in heat pump mode (°F)

T_I = average inlet water temperature to water heater (°F)

T_A = average ambient air temperature (°F)

W = total gallons hot water used in D days = $(W_R + W_H)$

W_R = gallons hot water used in resistance mode

W_H = gallons hot water used in heat pump mode

Z_H = number of times unit switches from resistance to heat pump mode (cycles)

Z_R = number of times unit switches from heat pump to resistance mode (cycles)

Q_R = kWh added to resistance-heated water stored in tank to raise temperature from T_R to T_H each time a resistance cycle ends

Q_T = kWh added to resistance-heated delivered water to raise temperature from T_R to T_H

Q_{JR} = kWh lost through the tank jacket during resistance heating operation

Q_{JH} = kWh lost through the tank jacket during heat pump heating operation

Q_H = extra kWh in heat pump heated water in tank at end of each heat pump cycle ($Q_H = Q_R$)

M_{1C} = corrected value of M_1 accounting for: 1) additional kWh to raise delivery temperature to T_H, 2) additional jacket losses at higher temperature T_H, 3) additional kWh to raise water in tank to T_H at end of each resistance cycle, and 4) added or reduced kWh for jacket losses for the same number of days of operation in resistance mode as in heat pump mode

$(M_2 + M_3)_C$ = corrected value of $(M_2 + M_3)$ accounting for reduction of kWh needed to raise tank temperature from T_R to T_H at start of each heat pump cycle

Assumptions for Calculations

1. Water in tank is at uniform temperature equal to delivery temperature.
2. Jacket losses are 8 $\frac{\text{Btu}}{\text{hr°F}}$ times the ΔT between tank and ambient air temperature.
3. MC_p (heat capacity) for water from 60° to 140°F is 8.26 $\frac{\text{Btu}}{\text{gal°F}}$.
4. Water tank volume is 82 gallons.

Calculation Steps

STEP 1 Calculation of water usage during each mode:

The amount of water used during the resistance mode can be determined, based on the net energy added to the water during resistance heating:

$$W_R = \frac{\left(\begin{array}{l}\text{total energy used during}\\ \text{resistance mode}\end{array}\right) - \left(\begin{array}{l}\text{energy lost}\\ \text{through jacket}\end{array}\right)}{\begin{array}{c}\text{added heat per gallon of delivered}\\ \text{resistance-heated water}\end{array}}$$

where

total energy added during resistance mode

= (metered resistance energy) + (correction for energy available from heat pump cycle)

$$= [3413\ (\frac{Btu}{kWh}) \times M_1] + [82\ (gallons) \times 8.26\ (\frac{Btu}{gal°F}) \times Z_R \times (T_H - T_R)\ °F]$$

$$= 3413\ M_1 + 677.3\ Z_R\ (T_H - T_R).$$

Energy lost through jacket

$$= 8\ (\frac{Btu}{hr°F}) \times (T_R - T_A)\ (°F) \times 24\ (\frac{hr}{day}) \times D_R\ (\text{resistance days})$$

$$= 192\ D_R\ (T_R - T_A).$$

Added heat per delivered gallon of resistance-heated water $= 8.26\ (\frac{Btu}{gal°F}) \times (T_R - T_I)\ (°F)$

$$= 8.26\ (T_R - T_I)\ (\frac{Btu}{gal}).$$

Then

$$W_R = \frac{3413\ M_1 + 677.3\ Z_R\ (T_H - T_R) - 192\ D_R\ (T_R - T_A)}{8.26\ (T_R - T_I)}$$

$$(gallons) = [\frac{413.2\ M_1 + 82\ Z_R\ (T_H - T_R) - 23.24\ D_R\ (T_R - T_A)}{(T_R - T_I)}]$$

and

$$W_H = W - W_R.$$

STEP 2 Calculation of energy terms:

a. Q_R = energy added to water stored in tank each time resistance cycle ends to raise temperature from T_R to T_H

$$= \frac{8.26\ (\frac{Btu}{gal°F}) \times 82\ (\frac{gal}{cycle}) \times (T_H - T_R)\ (°F)}{3413\ (\frac{Btu}{kWh})}$$

$$Q_R = 0.1985\ (T_H - T_R)\ (\frac{kWh}{cycle}).$$

b. Q_T = energy added to water withdrawn during heat pump mode to raise temperature from T_R to T_H

$$= \frac{8.26 \left(\frac{Btu}{gal°F}\right) \times W_R \text{ (gal)} \times (T_H - T_R) \text{ (°F)}}{3413 \left(\frac{Btu}{kWh}\right)}$$

$$Q_T = 0.00242 \, (T_H - T_R) \, W_R \quad \text{(kWh)}$$

where W_R is obtained from Step 1.

c. Q_{JR} = energy lost through the jacket during the resistance heating mode

$$= \frac{8 \left(\frac{Btu}{hr°F}\right) \times (T_R - T_A) \text{ (°F)} \times 24 \left(\frac{hr}{day}\right) \times D_R \text{ (resistance days)}}{3413 \left(\frac{Btu}{kWh}\right)}$$

$$Q_{JR} = 0.0563 \, D_R \, (T_R - T_A) \quad \text{(kWh)}$$

d. Q_{JH} = energy lost through the jacket during the heat pump mode

$$= \frac{8 \left.\frac{Btu}{hr°F}\right) \times (T_H - T_A) \text{ (°F)} \times 24 \left(\frac{hr}{day}\right) \times D_H \text{ (heat pump days)}}{3413 \left(\frac{Btu}{kWh}\right)}$$

$$Q_{JH} = 0.0563 \, D_H \, (T_H - T_A) \quad \text{(kWh)}$$

e. Q_H = extra energy stored in tank each time heat pump cycle ends due to lower resistance temperature

$$Q_H = Q_R = 0.1985 \, (T_H - T_R) \quad \left(\frac{kWh}{cycle}\right)$$

STEP 3 Calculation of meter corrections:

a. In order to determine what M_1 should be, based on the heat pump conditions, add the energy difference and correct the jacket losses.

$$M_{1C} = [M_1 + Q_T + Q_R Z_R - Q_{JR}] \times \left(\frac{W_H}{W_R}\right) + Q_{JH}$$

The bracketed term corrects M_1 for the difference in operating temperatures and deducts resistance-mode jacket losses; the W_H/W_R term corrects for the difference in water usage; and the last term is the correct jacket loss at the heat pump temperature.

b. $(M_2 + M_3)_C$ and Heat Pump Performance Factor (COP):

The correction for the heat pump meters depends on the unit's COP. However, the COP is based on the heat pump meter reading and should include the correction. Therefore, the two equations are combined and solved first for COP and then for $(M_2 + M_3)_C$.

$$(M_2 + M_3)_C = (M_2 + M_3) - \left(\frac{Q_H \times Z_H}{COP}\right)$$

$$COP = \frac{M_{1C}}{(M_2 + M_3)_C}$$

Substituting for M_{1C} and $(M_2 + M_3)_C$ in the equation for COP,

$$COP = \frac{\left(\frac{W_H}{W_R}\right)(M_1 + Q_T + Q_R Z_R - Q_{JR}) + Q_{JH}}{(M_2 + M_3) - \left(\frac{Q_H Z_H}{COP}\right)}$$

Solving to get COP only on the left side of the equation,

$$COP = \frac{\left[\left(\frac{W_H}{W_R}\right) (M_1 + Q_T + Q_R Z_R - Q_{JR}) + Q_{JH} \right] + Q_H Z_H}{(M_2 + M_3)}$$

$$COP = \frac{M_{1C} + Q_H Z_H}{(M_2 + M_3)}$$

Once the value for COP is calculated, it can be plugged into the equation for $(M_2 + M_3)_C$ to obtain corrected meter readings.

DATA CORRECTION PROGRAM LISTING

```
000  76  LBL
001  11   A
002  47  CMS
003  01   1
004  07   7
005  04   4
006  01   1
007  03   3
008  06   6
009  00   0
010  00   0
011  02   2
012  03   3
013  69  OP
014  01   01
015  03   3
016  03   3
017  00   0
018  00   0
019  01   1
020  06   6
021  01   1
022  03   3
023  03   3
024  07   7
025  69  OP
026  02   02
027  01   1
028  03   3
029  00   0
030  00   0
031  01   1
032  03   3
033  03   3
034  01   1
035  01   1
036  03   3
037  69  OP
038  03   03
039  02   2
040  07   7
041  04   4
042  05   5
043  03   3
044  06   6
045  02   2
046  04   4
047  03   3
048  06   6
049  69  OP
050  04   04
051  69  OP
052  05   05
053  04   4
054  03   3
055  69  OP
056  04   04
057  91  R/S
058  42  STO
059  00   00
060  69  OP
061  06   06
062  03   3
063  00   0
064  00   0
065  02   2
066  69  OP
067  04   04
068  91  R/S
069  42  STO
070  01   01
071  69  OP
072  06   06
073  03   3
074  00   0
075  00   0
076  03   3
077  69  OP
078  04   04
079  91  R/S
080  42  STO
081  02   02
082  69  OP
083  06   06
084  03   3
085  00   0
086  00   0
087  04   4
088  69  OP
089  04   04
090  91  R/S
091  42  STO
092  03   03
093  69  OP
094  06   06
095  01   1
096  06   6
097  02   2
098  03   3
099  69  OP
100  04   04
101  91  R/S
102  42  STO
103  04   04
104  69  OP
105  06   06
106  01   1
107  06   6
108  03   3
109  05   5
110  69  OP
111  04   04
112  91  R/S
113  42  STO
114  05   05
115  69  OP
116  06   06
117  04   4
118  06   6
119  02   2
120  03   3
121  69  OP
122  04   04
123  91  R/S
124  42  STO
125  21   21
126  69  OP
127  06   06
128  04   4
129  06   6
130  03   3
131  05   5
132  69  OP
133  04   04
134  91  R/S
135  42  STO
136  22   22
137  69  OP
138  06   06
139  03   3
140  07   7
141  02   2
142  03   3
143  69  OP
144  04   04
145  91  R/S
146  42  STO
147  07   07
148  69  OP
149  06   06
150  03   3
151  07   7
152  03   3
153  05   5
154  69  OP
155  04   04
156  91  R/S
157  42  STO
158  06   06
159  69  OP
160  06   06
161  03   3
162  07   7
163  02   2
164  04   4
165  69  OP
166  04   04
167  91  R/S
168  42  STO
169  08   08
170  69  OP
171  06   06
172  03   3
173  07   7
174  01   1
175  03   3
176  69  OP
177  04   04
178  91  R/S
179  42  STO
180  09   09
181  69  OP
182  06   06
183  02   2
184  03   3
185  69  OP
186  04   04
187  91  R/S
188  42  STO
189  10   10
190  69  OP
191  06   06
192  98  ADV
193  91  R/S
194  76  LBL
195  12   B
196  43  RCL
197  06   06
198  75   -
199  43  RCL
```

PROGRAM LISTING (Continued)

200	09	09
201	95	=
202	42	STO
203	11	11
204	43	RCL
205	06	06
206	75	-
207	43	RCL
208	08	08
209	95	=
210	42	STO
211	12	12
212	43	RCL
213	07	07
214	75	-
215	43	RCL
216	06	06
217	95	=
218	42	STO
219	13	13
220	43	RCL
221	07	07
222	75	-
223	43	RCL
224	09	09
225	95	=
226	42	STO
227	14	14
228	03	3
229	04	4
230	01	1
231	03	3
232	65	×
233	43	RCL
234	01	01
235	85	+
236	06	6
237	07	7
238	07	7
239	93	.
240	03	3
241	02	2
242	65	×
243	43	RCL
244	22	22
245	65	×
246	43	RCL
247	13	13
248	75	-
249	02	2
250	04	4
251	65	×
252	43	RCL
253	10	10
254	65	×
255	43	RCL
256	05	05
257	65	×
258	43	RCL
259	11	11
260	95	=
261	55	÷
262	08	8
263	93	.
264	02	2
265	06	6
266	55	÷
267	43	RCL
268	12	12
269	95	=
270	42	STO
271	15	15
272	94	+/-
273	85	+
274	43	RCL
275	00	00
276	95	=
277	42	STO
278	16	16
279	04	4
280	03	3
281	03	3
282	05	5
283	69	OP
284	04	04
285	43	RCL
286	15	15
287	69	OP
288	06	06
289	04	4
290	03	3
291	02	2
292	03	3
293	69	OP
294	04	04
295	43	RCL
296	16	16
297	69	OP
298	06	06
299	03	3
300	04	4
301	03	3
302	07	7
303	69	OP
304	04	04
305	93	.
306	00	0
307	00	0
308	02	2
309	04	4
310	02	2
311	65	×
312	43	RCL
313	13	13
314	65	×
315	43	RCL
316	15	15
317	95	=
318	42	STO
319	17	17
320	69	OP
321	06	06
322	03	3
323	04	4
324	02	2
325	05	5
326	69	OP
327	04	04
328	02	2
329	04	4
330	65	×
331	43	RCL
332	10	10
333	65	×
334	43	RCL
335	05	05
336	65	×
337	43	RCL
338	13	13
339	55	÷
340	03	3
341	04	4
342	01	1
343	03	3
344	95	=
345	42	STO
346	18	18
347	69	OP
348	06	06
349	03	3
350	04	4
351	03	3
352	05	5
353	69	OP
354	04	04
355	93	.
356	01	1
357	09	9
358	09	9
359	65	×
360	43	RCL
361	13	13
362	95	=
363	42	STO
364	19	19
365	69	OP
366	06	06
367	03	3
368	04	4
369	02	2
370	03	3
371	69	OP
372	04	04
373	43	RCL
374	19	19
375	69	OP
376	06	06
377	03	3
378	00	0
379	00	0
380	02	2
381	01	1
382	05	5
383	69	OP
384	04	04
385	43	RCL
386	11	11
387	65	×
388	43	RCL
389	10	10
390	65	×
391	43	RCL
392	05	05
393	65	×
394	02	2
395	04	4
396	55	÷
397	03	3
398	04	4
399	01	1

PROGRAM LISTING (Continued)

400	03	3
401	95	=
402	94	+/-
403	85	+
404	43	RCL
405	19	19
406	65	×
407	43	RCL
408	22	22
409	85	+
410	43	RCL
411	17	17
412	85	+
413	43	RCL
414	01	01
415	95	=
416	65	×
417	43	RCL
418	16	16
419	55	÷
420	43	RCL
421	15	15
422	85	+
423	02	2
424	04	4
425	65	×
426	43	RCL
427	04	04
428	65	×
429	43	RCL
430	10	10
431	65	×
432	43	RCL
433	14	14
434	55	÷
435	03	3
436	04	4
437	01	1
438	03	3
439	95	=
440	42	STO
441	20	20
442	69	OP
443	06	06
444	01	1
445	05	5
446	03	3
447	02	2
448	03	3
449	03	3
450	69	OP
451	04	04
452	43	RCL
453	20	20
454	85	+
455	43	RCL
456	19	19
457	65	×
458	43	RCL
459	21	21
460	95	=
461	55	÷
462	53	(
463	43	RCL
464	02	02
465	85	+
466	43	RCL
467	03	03
468	54	)
469	95	=
470	69	OP
471	06	06
472	98	ADV
473	98	ADV
474	98	ADV
475	91	R/S
476	61	GTO
477	02	02
478	79	79
479	00	0
480	76	LBL
481	13	C
482	03	3
483	02	2
484	03	3
485	03	3
486	03	3
487	07	7
488	02	2
489	04	4
490	03	3
491	02	2
492	69	OP
493	01	01
494	03	3
495	01	1
496	00	0
497	00	0
498	00	0
499	03	3
500	00	0
501	00	0
502	05	5
503	01	1
504	69	OP
505	02	02
506	02	2
507	01	1
508	02	2
509	04	4
510	04	4
511	04	4
512	00	0
513	00	0
514	04	4
515	03	3
516	69	OP
517	03	03
518	03	3
519	05	5
520	00	0
521	00	0
522	04	4
523	03	3
524	02	2
525	03	3
526	05	5
527	01	1
528	69	OP
529	04	04
530	69	OP
531	05	05
532	98	ADV
533	43	RCL
534	05	05
535	55	÷
536	53	(
537	43	RCL
538	04	04
539	85	+
540	43	RCL
541	05	05
542	54	)
543	95	=
544	65	×
545	43	RCL
546	00	00
547	95	=
548	42	STO
549	15	15
550	94	+/-
551	85	+
552	43	RCL
553	00	00
554	95	=
555	42	STO
556	16	16
557	61	GTO
558	02	02
559	79	79
560	76	LBL
561	15	E
562	01	1
563	05	5
564	03	3
565	02	2
566	03	3
567	03	3
568	03	3
569	05	5
570	69	OP
571	04	04
572	43	RCL
573	01	01
574	55	÷
575	53	(
576	43	RCL
577	02	02
578	85	+
579	43	RCL
580	03	03
581	54	)
582	95	=
583	69	OP
584	06	06
585	98	ADV
586	98	ADV
587	98	ADV
588	91	R/S
589	76	LBL
590	14	D
591	03	3
592	02	2
593	03	3
594	03	3
595	03	3
596	07	7
597	04	4
598	00	0
599	00	0

PROGRAM LISTING (Continued)

600	00	0
601	69	OP
602	01	01
603	00	0
604	04	4
605	00	0
606	00	0
607	05	5
608	01	1
609	02	2
610	04	4
611	03	3
612	01	1
613	69	OP
614	02	02
615	03	3
616	03	3
617	04	4
618	01	1
619	03	3
620	07	7
621	00	0
622	00	0
623	04	4
624	03	3
625	69	OP
626	03	03
627	03	3
628	05	5
629	00	0
630	00	0
631	04	4
632	03	3
633	02	2
634	03	3
635	05	5
636	01	1
637	69	OP
638	04	04
639	69	OP
640	05	05
641	98	ADV
642	91	R/S
643	42	STO
644	15	15
645	00	0
646	00	0
647	04	4
648	03	3
649	03	3
650	05	5
651	00	0
652	00	0
653	00	0
654	00	0
655	69	OP
656	04	04
657	43	RCL
658	15	15
659	69	OP
660	06	06
661	91	R/S
662	42	STO
663	16	16
664	00	0
665	00	0
666	04	4
667	03	3
668	02	2
669	03	3
670	00	0
671	00	0
672	00	0
673	00	0
674	69	OP
675	04	04
676	43	RCL
677	16	16
678	69	OP
679	06	06
680	98	ADV
681	61	GTO
682	02	02
683	79	79

LINEAR REGRESSION METHOD FOR ESTIMATING THE DEPENDENCE OF COP ON TEMPERATURE

Let $S \equiv \Sigma_1^n (COP - COP^*)^2 = \Sigma_1^n [COP - (B + BT_A + CT_I + DT_D)]^2$,

where

$COP \equiv$ measured coefficient of performance,

$COP^* \equiv A + BT_A + CT_I + DT_D$ is the predicted COP,

$T_A \equiv$ ambient temperature,

$T_I \equiv$ supply water temperature,

$T_D \equiv$ delivery water temperature, and

A,B,C, and D $\equiv$ regression coefficients.

To minimize S, set the first derivatives of S = 0. This results in the following equations:

$$\frac{\partial S}{\partial A} = 0 = 2\Sigma_1^n [COP - (A + BT_A + CT_I + DT_D)](-1) , \quad (1)$$

$$\frac{\partial S}{\partial B} = 0 = 2\Sigma_1^n [COP - (A + BT_A + CT_I + DT_D)](-T_A) , \quad (2)$$

$$\frac{\partial S}{\partial C} = 0 = 2\Sigma_1^n [COP - (A + BT_A + CT_I + DT_D)](-T_I) , \text{ and} \quad (3)$$

$$\frac{\partial S}{\partial D} = 0 = 2\Sigma_1^n [COP - (A + BT_A + CT_I + DT_D)](-T_D) . \quad (4)$$

Rearranging Eqs. (1) through (4), we have the following:

$$\Sigma COP = An + B\Sigma T_A + C\Sigma T_I + D\Sigma T_D ,$$

$$\Sigma COP \cdot T_A = A\Sigma T_A + B\Sigma T_A^2 + C\Sigma T_I T_A + D\Sigma T_D T_A ,$$

$$\Sigma COP \cdot T_I = A\Sigma T_I + B\Sigma T_A T_I + C\Sigma T_I^2 + D\Sigma T_D T_I , \text{ and}$$

$$\Sigma COP \cdot T_D = A\Sigma T_D + B\Sigma T_A T_D + C\Sigma T_I T_D + D\Sigma T_D^2 .$$

The constants A, B, C, and D may be found by solving these simultaneous equations using matrix techniques.

APPENDIX C

FIELD DATA BASE AND SUMMARIES

EUS Field Test Data	C-1
Summary of EUS Field Test Data by Utility and Unit	C-14

EUS FIELD TEST DATA

ENTRY	DATA CLASS	HPWH COP	AVE DAILY GALLONS	AIR TEMP (F)	INLET WATER TEMP(F)	DLVRY WATER TEMP(F)
1	2	2.10	57	76	84	146
2	2	1.63	34	99	84	147
3	2	1.81	49	100	90	148
4	2	1.95	48	91	85	145
5	2	2.07	66	62	45	138
6	3	1.65	90	63	60	136
7	2	1.65	66	68	53	135
8	2	2.12	40	77	56	146
9	1	1.65	28	67	60	137
10	2	2.11	45	73	60	126
11	2	1.49	29	69	66	136
12	2	2.00	17	65	65	134
13	2	2.14	134	63	60	137
14	2	2.06	140	76	52	143
15	3	1.30	130	76	55	144
16	2	2.77	132	71	56	141
17	2	2.11	144	72	56	143
18	2	1.75	146	79	56	130
19	2	2.03	152	76	60	143
20	3	2.58	50	72	60	137
21	2	2.17	51	74	55	146
22	2	2.20	76	75	54	146
23	1	1.65	70	74	59	138
24	1	1.76	70	71	60	139
25	2	2.12	71	64	62	130
26	2	2.43	68	69	58	138
27	3	1.64	86	65	66	141
28	3	1.41	92	60	64	141
29	3	1.13	100	57	62	141
30	3	1.58	109	60	59	142
31	3	1.18	105	60	71	139
32	3	1.70	94	62	62	141
33	3	1.78	93	65	65	141
34	2	1.70	81	66	63	144
35	2	1.66	79	95	68	139
36	3	1.49	25	81	70	138
37	3	2.25	31	69	71	143
38	2	2.00	28	67	70	141
39	3	1.60	32	67	70	142
40	3	2.36	30	75	74	139
41	1	2.06	33	69	66	154
42	1	1.82	48	73	69	146
43	1	2.05	69	84	81	151
44	3	1.62	27	70	65	124
45	3	1.73	28	65	63	125
46	3	1.98	38	65	65	124
47	3	1.84	38	54	65	124
48	3	1.91	31	48	65	124
49	3	2.09	33	56	80	119
50	3	1.48	27	53	59	119

EUS FIELD TEST DATA (CONT'D)

ENTRY	DATA CLASS	HPWH COP	AVE DAILY GALLONS	AIR TEMP (F)	INLET WATER TEMP(F)	DLVRY WATER TEMP(F)
51	3	1.54	23	77	84	135
52	3	1.79	28	57	71	113
53	3	1.57	22	57	71	118
54	3	1.52	23	83	71	139
55	2	1.84	31	85	80	148
56	3	2.07	96	75	65	145
57	3	2.31	115	75	63	145
58	3	2.05	90	74	65	148
59	3	2.30	107	69	75	146
60	3	2.00	91	73	73	149
61	3	2.31	94	76	59	150
62	3	1.64	89	80	84	147
63	3	2.18	102	82	60	142
64	3	1.07	103	84	71	128
65	2	2.29	121	85	80	143
66	2	2.44	138	78	75	149
67	2	1.89	152	78	73	138
68	1	2.18	162	75	70	139
69	3	1.93	30	75	73	142
70	3	1.58	45	75	73	144
71	3	2.09	43	72	73	149
72	3	1.69	40	68	73	142
73	3	1.53	32	68	65	141
74	3	1.40	30	75	80	139
75	3	3.08	27	74	78	140
76	3	1.80	24	85	84	150
77	3	2.48	31	80	71	140
78	3	2.35	28	81	74	118
79	3	2.38	14	80	70	118
80	2	2.51	26	82	80	127
81	2	2.19	27	75	76	126
82	2	2.69	38	74	72	130
83	2	2.08	46	72	67	127
84	3	1.82	189	77	65	138
85	3	1.36	169	80	80	135
86	3	1.27	190	80	78	138
87	3	1.01	149	90	84	133
88	3	1.00	165	86	71	132
89	3	1.69	149	86	71	141
90	2	2.07	132	86	80	142
91	1	1.95	148	88	77	141
92	2	1.35	153	82	72	142
93	2	1.65	171	79	71	143
94	2	1.75	44	69	54	127
95	3	2.04	56	70	80	137
96	3	2.33	44	76	72	136
97	3	2.30	43	80	84	137
98	2	3.06	37	85	85	137
99	2	1.94	37	82	85	141
100	2	2.03	48	68	74	137

EUS FIELD TEST DATA (CONT'D)

ENTRY	DATA CLASS	HPWH COP	AVE DAILY GALLONS	AIR TEMP (F)	INLET WATER TEMP(F)	DLVRY WATER TEMP(F)
101	2	2.81	42	74	70	138
102	2	1.71	45	67	61	136
103	3	1.54	55	63	61	132
104	3	2.69	61	91	56	137
105	3	1.92	67	88	56	137
106	3	1.83	68	86	54	136
107	2	1.50	60	77	77	137
108	2	2.07	61	94	86	143
109	1	1.85	64	91	79	131
110	2	1.98	78	87	69	140
111	2	1.60	56	74	66	133
112	3	1.70	65	82	56	126
113	3	1.79	97	77	56	128
114	2	2.49	40	75	54	125
115	2	1.73	94	70	54	133
116	1	1.26	59	74	68	135
117	1	1.50	80	81	83	134
118	1	2.06	69	90	85	138
119	2	2.56	60	89	87	136
120	1	1.77	68	85	87	135
121	1	2.34	109	79	74	124
122	2	1.84	41	71	87	130
123	1	1.80	72	83	79	133
124	1	1.74	79	84	78	133
125	1	1.84	77	78	66	131
126	1	1.37	74	77	61	124
127	2	1.86	167	65	64	131
128	2	1.06	198	63	54	131
129	2	1.61	192	63	52	131
130	2	1.74	198	63	60	130
131	2	1.80	234	72	54	132
132	3	1.69	91	80	74	126
133	3	1.83	66	85	74	123
134	3	2.00	52	81	74	141
135	1	1.69	53	77	72	144
136	1	1.43	50	72	70	146
137	1	1.69	53	64	66	146
138	3	1.48	54	62	65	146
139	2	1.56	66	62	64	146
140	1	1.66	65	71	70	145
141	1	2.50	57	69	72	143
142	2	1.70	66	76	71	142
143	1	2.19	33	75	74	139
144	1	2.37	35	83	74	138
145	1	2.25	32	83	74	138
146	1	2.10	38	76	72	139
147	1	1.68	48	71	70	139
148	1	1.84	46	61	66	141
149	1	2.22	44	63	65	141
150	1	1.41	43	62	64	144

EUS FIELD TEST DATA (CONT'D)

ENTRY	DATA CLASS	HPWH COP	AVE DAILY GALLONS	AIR TEMP (F)	INLET WATER TEMP(F)	DLVRY WATER TEMP(F)
151	1	1.68	42	57	70	140
152	1	1.55	39	65	72	140
153	1	1.67	38	72	71	144
154	1	1.99	37	83	78	146
155	2	2.21	96	85	71	145
156	3	2.22	80	84	71	152
157	1	2.35	43	82	74	141
158	1	2.35	50	84	74	140
159	1	2.41	45	84	74	139
160	1	2.39	38	84	74	141
161	1	2.13	48	77	72	139
162	1	1.84	59	69	70	141
163	1	1.77	81	61	66	142
164	1	1.78	66	62	65	142
165	1	1.73	71	55	64	142
166	1	1.76	65	70	70	144
167	1	2.44	44	66	72	144
168	1	2.77	49	85	72	146
169	1	2.37	69	84	74	144
170	1	2.38	41	84	74	136
171	1	2.41	56	83	74	136
172	1	2.39	70	78	72	139
173	1	2.07	84	71	70	140
174	1	2.11	83	69	66	140
175	1	2.16	87	70	65	141
176	1	2.07	101	65	64	141
177	1	2.00	67	69	70	142
178	2	2.24	76	76	72	141
179	1	2.19	57	81	71	141
180	2	2.35	36	86	71	142
181	1	1.74	223	70	70	137
182	2	1.90	229	77	70	139
183	1	2.35	232	76	73	141
184	1	2.39	214	77	80	140
185	2	2.22	197	73	71	138
186	1	2.34	173	79	64	147
187	2	2.75	181	83	66	157
188	2	2.47	180	79	68	142
189	1	2.04	133	71	70	147
190	1	1.97	142	71	70	145
191	2	1.71	121	73	73	147
192	2	1.85	159	73	80	147
193	2	1.87	133	74	71	147
194	2	1.75	121	77	70	139
195	2	2.13	115	77	76	142
196	2	1.92	128	78	68	140
197	1	2.05	43	70	70	135
198	1	2.11	47	70	70	137
199	2	2.09	41	74	73	137
200	1	1.84	40	71	80	135

EUS FIELD TEST DATA (CONT'D)

ENTRY	DATA CLASS	HPWH COP	AVE DAILY GALLONS	AIR TEMP (F)	INLET WATER TEMP(F)	DLVRY WATER TEMP(F)
201	1	1.89	50	77	71	136
202	1	2.01	65	79	72	137
203	1	2.18	67	77	79	141
204	2	1.78	54	83	68	144
205	2	1.97	39	70	70	131
206	2	1.96	51	69	69	136
207	2	1.95	43	69	60	141
208	2	1.81	52	71	57	135
209	1	1.95	37	68	48	136
210	1	2.01	70	68	42	136
211	2	1.98	68	68	40	134
212	3	1.95	63	75	43	145
213	2	1.81	60	76	43	145
214	1	1.99	58	68	49	143
215	1	1.95	79	70	62	146
216	2	2.09	74	78	62	149
217	2	1.83	27	69	65	137
218	1	2.38	50	70	72	141
219	2	2.00	45	84	64	149
220	1	2.00	50	62	62	135
221	2	1.96	104	70	63	132
222	2	1.95	107	70	63	131
223	2	1.91	103	71	63	132
224	2	1.90	114	67	60	132
225	1	1.92	106	69	54	132
226	1	2.04	101	68	48	132
227	1	2.00	102	69	45	133
228	2	2.04	115	62	43	135
229	1	1.83	89	62	49	141
230	1	1.99	95	68	58	141
231	1	2.09	70	67	64	138
232	1	2.29	63	68	64	137
233	2	1.26	85	71	62	161
234	2	1.76	63	73	64	159
235	1	1.68	76	65	61	152
236	1	1.57	38	70	57	140
237	1	1.54	36	69	51	139
238	1	1.52	42	70	48	139
239	1	1.55	39	64	42	139
240	1	1.65	42	69	40	142
241	1	1.65	40	69	49	145
242	1	1.66	46	69	57	148
243	2	1.73	38	72	65	146
244	2	1.66	33	72	64	146
245	2	1.72	34	72	61	146
246	2	2.12	82	71	70	139
247	2	1.86	77	71	69	137
248	1	1.96	96	70	60	136
249	1	1.74	103	69	57	137
250	1	1.87	113	69	48	140

EUS FIELD TEST DATA (CONT'D)

ENTRY	DATA CLASS	HPWH COP	AVE DAILY GALLONS	AIR TEMP (F)	INLET WATER TEMP(F)	DLVRY WATER TEMP(F)
251	1	2.12	101	68	42	144
252	1	2.17	104	68	40	145
253	2	1.89	117	67	43	146
254	2	2.75	111	66	43	146
255	2	1.69	136	64	49	147
256	2	2.01	85	70	66	147
257	2	1.74	39	69	66	145
258	2	1.97	58	71	66	143
259	1	1.97	81	71	69	144
260	2	1.85	86	71	64	149
261	1	1.97	71	63	46	140
262	1	1.83	51	58	46	141
263	2	1.90	66	57	44	139
264	2	1.47	32	62	48	139
265	2	1.77	47	66	54	139
266	2	2.38	63	73	61	140
267	3	1.56	62	76	70	143
268	2	1.99	56	79	69	141
269	2	2.45	44	81	73	151
270	3	1.52	32	77	72	139
271	2	1.75	37	73	67	140
272	3	1.39	46	67	58	138
273	3	1.46	62	63	51	141
274	2	2.37	68	70	46	142
275	2	2.23	42	70	46	142
276	1	1.91	45	68	44	134
277	2	1.96	51	69	48	137
278	2	1.89	38	69	54	136
279	2	1.58	60	70	61	139
280	2	2.31	59	73	70	136
281	2	1.91	49	71	69	134
282	2	1.99	13	56	72	129
283	3	1.80	24	58	67	135
284	3	1.15	35	55	58	140
285	3	2.09	39	55	51	142
286	3	2.25	158	77	46	140
287	3	1.77	121	79	46	142
288	2	1.94	137	83	44	140
289	2	1.89	132	89	48	138
290	2	2.25	115	77	54	142
291	2	2.18	101	76	61	143
292	2	2.37	104	77	70	144
293	2	1.84	80	74	69	145
294	1	1.82	85	77	73	139
295	1	2.03	74	78	72	142
296	2	2.43	84	86	67	149
297	1	2.13	79	85	58	142
298	2	1.93	64	72	54	145
299	1	1.85	75	73	46	144
300	1	1.92	61	72	46	146

EUS FIELD TEST DATA (CONT'D)

ENTRY	DATA CLASS	HPWH COP	AVE DAILY GALLONS	AIR TEMP (F)	INLET WATER TEMP(F)	DLVRY WATER TEMP(F)
301	2	1.72	65	74	44	147
302	2	1.62	39	73	48	146
303	2	2.18	47	68	54	146
304	2	1.32	62	75	61	145
305	2	2.93	35	70	70	136
306	2	2.22	54	74	69	147
307	3	2.50	64	74	73	143
308	2	2.02	63	75	72	145
309	3	2.03	56	73	67	145
310	3	1.91	58	72	58	147
311	3	1.42	28	55	45	135
312	3	1.84	30	55	45	133
313	3	1.42	26	65	45	133
314	3	1.42	15	65	55	135
315	3	2.62	75	62	45	131
316	3	2.48	72	63	45	132
317	1	2.28	65	63	54	134
318	1	2.03	74	69	54	135
319	2	2.08	75	65	60	133
320	3	2.08	72	64	60	129
321	3	2.47	74	64	60	129
322	2	2.36	64	80	70	130
323	2	2.36	83	62	56	122
324	1	2.14	75	73	56	129
325	3	1.22	36	55	45	131
326	3	1.49	28	55	54	132
327	3	1.48	26	56	57	131
328	3	1.52	28	60	55	126
329	2	2.16	25	70	68	138
330	3	2.48	28	67	70	125
331	2	1.63	24	64	62	139
332	1	1.73	31	65	65	109
333	2	1.76	34	68	82	120
334	1	1.53	31	68	70	120
335	1	3.01	36	67	70	125
336	1	1.53	26	65	68	125
337	2	1.68	140	63	52	136
338	2	1.59	136	64	62	139
339	2	1.53	146	69	54	140
340	1	1.90	115	70	60	141
341	1	1.83	118	77	70	130
342	1	1.65	75	88	74	144
343	1	1.68	79	84	70	145
344	2	1.37	88	86	70	144
345	1	1.51	89	78	68	141
346	3	2.02	77	62	55	140
347	3	1.35	88	58	52	141
348	3	2.31	87	56	53	140
349	3	1.43	89	65	49	143
350	3	1.29	94	65	47	142

EUS FIELD TEST DATA (CONT'D)

ENTRY	DATA CLASS	HPWH COP	AVE DAILY GALLONS	AIR TEMP (F)	INLET WATER TEMP(F)	DLVRY WATER TEMP(F)
351	2	1.56	89	65	46	141
352	3	2.40	86	65	48	143
353	2	1.71	85	53	49	140
354	2	1.57	83	60	50	140
355	2	1.80	72	65	50	142
356	2	1.66	64	68	54	131
357	2	1.57	64	70	54	144
358	3	1.94	56	70	56	145
359	3	1.74	55	65	52	146
360	2	1.74	55	60	53	147
361	3	1.70	36	60	49	148
362	2	1.62	52	60	47	148
363	2	2.34	49	76	53	140
364	2	1.90	37	73	49	140
365	2	1.83	34	70	47	138
366	2	1.53	37	71	46	140
367	2	1.63	76	71	48	142
368	3	1.61	39	61	50	137
369	2	1.49	50	62	50	138
370	2	1.75	47	65	53	141
371	1	1.63	49	69	54	139
372	2	3.19	38	72	54	137
373	3	2.05	59	66	56	131
374	1	2.03	65	60	52	133
375	2	2.16	68	59	53	135
376	2	2.33	75	53	49	136
377	2	2.05	68	52	47	136
378	3	1.56	69	60	46	137
379	1	1.82	72	54	48	138
380	1	2.11	85	56	50	136
381	1	1.73	62	54	50	135
382	2	1.92	65	67	51	136
383	2	1.61	50	70	58	125
384	2	2.61	57	73	58	129
385	3	1.68	48	63	50	149
386	2	1.85	43	57	50	144
387	2	1.18	45	63	54	138
388	2	1.61	42	73	58	136
389	2	1.85	30	76	58	137
390	2	2.26	148	70	70	131
391	2	2.57	139	71	73	133
392	2	1.89	135	74	60	148
393	2	2.49	127	77	57	149
394	2	1.92	115	77	60	148
395	2	2.41	105	76	58	146
396	2	1.89	117	73	57	150
397	2	1.52	126	74	61	148
398	2	1.98	123	74	64	151
399	2	2.49	87	70	67	146
400	2	2.14	72	74	72	143

EUS FIELD TEST DATA (CONT'D)

ENTRY	DATA CLASS	HPWH COP	AVE DAILY GALLONS	AIR TEMP (F)	INLET WATER TEMP(F)	DLVRY WATER TEMP(F)
401	2	1.37	84	74	73	147
402	3	1.04	20	72	73	138
403	2	1.53	81	77	58	143
404	2	3.46	55	74	58	139
405	2	1.77	79	66	58	142
406	3	1.56	74	67	61	144
407	2	2.27	72	78	64	145
408	2	2.20	82	73	67	145
409	2	2.09	69	81	72	144
410	3	1.83	73	78	72	145
411	3	1.80	93	77	73	145
412	2	1.90	93	65	67	133
413	2	2.18	114	72	57	147
414	1	1.59	60	56	61	134
415	2	1.82	56	69	64	137
416	2	1.76	64	72	67	134
417	2	2.82	103	79	71	137
418	2	2.50	59	82	70	140
419	1	2.39	100	74	37	137
420	2	2.23	104	75	37	145
421	1	2.27	105	74	36	148
422	1	1.74	78	74	40	147
423	1	2.33	85	73	47	147
424	1	2.12	101	71	55	147
425	1	2.21	87	70	55	150
426	1	1.98	106	70	56	149
427	1	1.93	93	68	53	146
428	1	1.87	100	71	51	147
429	2	2.01	85	67	46	146
430	2	2.05	99	71	39	149
431	2	2.14	117	71	39	147
432	1	2.37	92	62	37	137
433	2	2.20	71	59	37	136
434	1	1.89	85	56	36	138
435	1	2.33	76	59	40	139
436	1	2.26	75	63	52	135
437	1	1.68	68	73	54	136
438	1	1.89	68	63	55	142
439	1	1.91	62	66	56	136
440	1	1.94	73	67	56	141
441	2	2.76	57	64	54	139
442	2	1.80	73	58	42	136
443	2	2.62	105	58	37	137
444	2	2.02	117	52	37	136
445	1	1.45	121	54	36	135
446	1	1.48	101	56	40	136
447	1	1.75	113	63	47	138
448	1	1.66	119	64	55	135
449	2	3.19	84	63	42	131
450	2	2.23	109	70	50	135

EUS FIELD TEST DATA (CONT'D)

ENTRY	DATA CLASS	HPWH COP	AVE DAILY GALLONS	AIR TEMP (F)	INLET WATER TEMP(F)	DLVRY WATER TEMP(F)
451	2	1.98	113	69	52	135
452	2	2.04	101	69	51	140
453	2	2.09	83	67	51	137
454	2	1.88	75	69	37	149
455	1	2.24	84	75	61	145
456	1	2.09	64	74	57	141
457	1	2.20	75	72	56	141
458	1	2.36	75	73	54	140
459	2	2.57	95	70	51	142
460	2	2.27	47	70	49	141
461	2	2.12	43	70	47	138
462	1	2.26	50	70	47	141
463	1	2.22	63	67	50	140
464	1	2.13	65	68	58	142
465	2	2.40	63	71	53	142
466	1	1.86	32	57	56	135
467	2	2.03	29	65	52	142
468	2	1.93	31	78	58	145
469	2	2.19	34	83	53	147
470	2	2.36	27	97	64	147
471	2	2.40	23	86	66	140
472	2	2.38	56	79	61	146
473	1	2.31	58	83	57	143
474	1	1.96	63	84	56	144
475	1	2.22	58	78	54	146
476	1	2.18	63	70	51	143
477	1	1.96	58	71	49	145
478	1	2.12	54	73	47	141
479	1	1.74	82	71	47	142
480	1	2.01	81	65	50	145
481	2	1.88	82	73	58	147
482	2	2.44	74	77	53	144
483	2	1.85	54	73	56	144
484	2	2.22	47	71	58	136
485	1	2.14	77	77	61	137
486	1	2.07	87	74	57	136
487	1	1.81	76	66	56	135
488	1	1.94	82	63	54	139
489	1	1.74	73	59	51	138
490	2	1.74	87	56	49	139
491	1	1.73	79	56	47	139
492	2	1.73	80	61	52	142
493	1	1.82	76	65	58	144
494	2	1.82	85	72	58	142
495	2	2.10	74	78	53	145
496	3	2.05	58	81	56	140
497	2	1.63	69	65	49	133
498	2	1.63	47	65	47	143
499	2	1.85	59	70	49	151
500	1	1.60	58	67	50	151

EUS FIELD TEST DATA (CONT'D)

ENTRY	DATA CLASS	HPWH COP	AVE DAILY GALLONS	AIR TEMP (F)	INLET WATER TEMP(F)	DLVRY WATER TEMP(F)
501	1	1.74	63	67	58	154
502	2	1.86	58	72	53	144
503	3	2.10	52	66	61	131
504	2	1.93	71	82	62	142
505	3	2.45	69	59	50	138
506	2	1.97	67	62	53	137
507	3	2.56	62	65	55	139
508	3	2.42	73	65	55	140
509	2	1.76	72	64	55	142
510	1	2.09	72	60	53	141
511	1	1.79	70	58	61	142
512	2	1.32	71	54	49	142
513	2	1.02	65	51	48	143
514	2	1.43	61	51	46	144
515	1	1.67	83	52	49	143
516	3	1.79	67	57	46	144
517	3	0.94	65	61	54	144
518	3	1.17	64	64	58	146
519	3	1.65	92	74	53	148
520	3	1.84	101	70	55	143
521	2	1.99	110	72	53	146
522	1	1.82	104	67	61	144
523	1	1.82	102	67	49	146
524	1	2.07	108	70	48	148
525	1	1.91	101	66	46	146
526	1	1.83	95	64	46	148
527	1	1.71	98	57	50	144
528	1	1.75	82	67	54	149
529	1	1.63	68	72	54	147
530	1	1.83	76	74	54	153
531	3	1.89	28	80	53	151
532	3	1.13	29	74	53	145
533	3	1.56	21	75	55	145
534	3	2.62	23	71	55	145
535	2	2.25	26	66	53	142
536	2	1.71	35	70	55	135
537	3	1.12	26	72	48	136
538	2	1.39	26	75	46	135
539	2	2.05	37	80	48	136
540	2	1.14	17	80	49	137
541	2	1.07	33	65	49	140
542	2	2.29	31	68	54	140
543	3	1.46	28	66	68	128
544	2	1.31	28	64	65	132
545	2	1.46	28	59	61	133
546	2	1.53	31	62	65	133
547	2	1.66	28	59	60	137
548	2	1.83	102	61	68	127
549	3	1.40	121	59	65	130
550	2	1.52	122	60	61	128

EUS FIELD TEST DATA (CONT'D)

ENTRY	DATA CLASS	HPWH COP	AVE DAILY GALLONS	AIR TEMP (F)	INLET WATER TEMP(F)	DLVRY WATER TEMP(F)
551	2	1.66	122	60	65	131
552	2	1.95	86	57	60	132
553	3	2.64	78	57	63	133
554	2	1.77	81	60	65	131
555	2	2.09	89	60	67	132
556	3	1.79	76	66	70	134
557	3	2.09	58	65	75	130
558	2	2.06	63	66	72	133
559	2	1.67	68	62	70	133
560	3	2.06	64	66	68	131
561	2	1.60	72	63	65	131
562	2	1.85	75	58	61	129
563	3	2.09	61	63	65	133
564	3	1.53	77	56	60	132
565	2	2.13	71	62	63	134
566	2	2.10	52	67	65	134
567	3	2.43	60	67	67	134
568	2	2.18	49	79	70	135
569	2	2.10	36	79	75	134
570	2	2.41	49	76	72	137
571	2	2.32	53	76	70	136
572	3	2.05	213	72	68	128
573	2	1.43	145	68	65	129
574	2	1.82	160	69	61	129
575	3	2.00	153	69	65	130
576	3	1.52	143	63	60	129
577	2	2.01	137	67	63	130
578	2	1.99	128	70	65	130
579	3	1.91	149	71	67	131
580	2	2.49	137	79	70	131
581	2	2.05	118	72	70	130
582	3	1.65	68	70	57	153
583	2	1.93	71	70	62	154
584	2	1.42	58	92	65	151
585	2	1.66	61	96	60	151
586	2	2.10	54	94	68	152
587	1	1.57	62	88	75	144
588	1	2.03	45	80	77	149
589	2	2.33	62	90	64	158
590	2	2.26	53	104	60	159
591	2	1.93	61	70	54	146
592	2	2.06	38	72	57	136
593	2	2.00	30	66	62	133
594	2	2.18	30	68	65	131
595	2	2.11	25	67	60	129
596	1	2.18	25	65	68	123
597	1	1.66	13	84	69	139
598	1	1.99	24	70	77	132
599	1	2.07	37	68	63	140
600	1	1.83	74	69	54	141

EUS FIELD TEST DATA (CONT'D)

ENTRY	DATA CLASS	HPWH COP	AVE DAILY GALLONS	AIR TEMP (F)	INLET WATER TEMP(F)	DLVRY WATER TEMP(F)
601	1	1.94	69	75	57	137
602	2	1.81	45	87	65	146
603	2	2.22	51	93	60	150
604	2	2.24	40	90	68	146
605	1	2.09	51	77	77	144
606	2	2.84	50	90	77	147
607	2	1.55	49	89	64	148
608	1	2.39	70	86	60	148
609	2	1.68	71	79	56	146
610	2	1.42	86	59	54	147
611	2	1.89	89	69	57	152
612	2	1.78	83	73	62	150
613	2	3.07	58	78	65	148
614	2	1.42	63	86	77	151
615	2	1.06	78	73	64	149
616	2	1.21	89	68	60	149
617	3	1.33	98	66	56	147
618	2	2.04	135	79	43	147
619	2	1.96	145	79	43	150
620	2	1.94	159	78	50	145
621	2	2.31	127	71	58	144
622	2	2.13	100	75	67	141
623	3	1.75	88	70	74	139
624	2	1.49	60	66	43	137
625	1	1.94	68	68	43	137
626	1	1.95	60	70	50	136
627	2	2.00	57	72	65	137
628	1	1.84	58	75	69	135
629	1	1.67	53	77	74	135
630	2	1.19	68	75	43	141
631	2	1.69	62	74	43	145
632	2	1.96	71	66	50	143
633	2	1.95	64	68	58	141
634	2	1.74	59	72	67	143
635	2	1.98	61	75	70	142
636	2	2.25	38	73	37	145
637	2	2.43	42	70	35	141
638	2	2.26	30	72	35	145
639	3	1.59	52	52	41	156
640	3	1.65	51	49	37	156
641	3	1.72	54	47	35	153
642	2	1.93	60	49	35	155
643	3	1.82	70	49	54	145

SUMMARY OF EUS FIELD DATA BY UTILITY AND UNIT
-ALL DATA CLASSES

UTIL	UNIT	AVERAGES KWHR/D	KWHP/D	COP	GAL/D	DT(F)	AMB(F)	UNIT MOS
APS								
	3	7.90	4.17	1.89	47	61	92	4
AVERAGE		7.90	4.17	1.89	47	61	92	4
BPA								
	2	12.72	7.06	1.80	48	78	68	8
	3	30.54	15.24	2.00	140	84	73	7
	4	18.00	8.60	2.09	65	81	71	7
AVERAGE		20.42	10.30	1.97	84	81	71	22
DPC								
	1	21.41	14.40	1.49	93	77	66	9
	2	10.55	5.55	1.90	29	70	72	5
	3	11.47	5.95	1.93	41	83	71	2
	4	44.50	21.71	2.05	69	70	84	1
AVERAGE		21.98	11.90	1.84	58	75	73	17
FPL								
	1	7.37	4.39	1.68	28	61	68	2
	2	24.40	12.16	2.01	112	74	77	13
	3	8.27	4.23	1.95	32	62	76	15
	4	27.51	19.06	1.44	162	64	83	10
AVERAGE		16.89	9.96	1.77	83	65	76	40
GVE								
	1	11.56	5.84	1.98	45	63	73	10
	2	12.02	6.52	1.84	64	69	86	8
	3	13.55	7.76	1.75	70	62	80	9
	4	13.60	7.49	1.82	75	55	79	6
	5	32.52	20.67	1.57	198	74	65	5
AVERAGE		16.65	9.66	1.79	91	65	77	38
GPC								
	1	12.37	7.26	1.70	61	71	73	11
	2	10.40	5.61	1.85	40	70	71	12
	3	17.20	7.77	2.21	88	78	85	2
	4	13.89	6.86	2.02	55	71	73	12
	5	15.22	6.96	2.19	69	70	76	12
AVERAGE		13.81	6.89	2.00	63	72	76	49
HEC								
	2	35.53	16.10	2.21	204	72	77	8
	3	26.02	13.70	1.90	132	72	74	8
	4	11.38	5.70	2.00	51	65	75	8
AVERAGE		24.31	11.83	2.03	129	70	75	24

SUMMARY OF EUS FIELD DATA BY UTILITY AND UNIT (CONT'D)
-ALL DATA CLASSES

UTIL	UNIT	AVERAGES KWHR/D	KWHP/D	COP	GAL/D	DT(F)	AMB(F)	UNIT MOS
IPL								
	1	14.12	7.15	1.97	54	83	71	16
	2	21.80	11.53	1.89	93	82	68	15
	3	12.12	7.47	1.62	39	90	70	10
	4	22.19	11.21	1.98	93	86	69	15
AVERAGE		17.56	9.34	1.87	70	85	69	56
KGE								
	1	14.40	8.07	1.79	51	82	69	13
	2	12.42	6.46	1.92	44	80	65	12
	3	22.88	11.14	2.05	106	83	80	12
	4	16.19	8.28	1.96	57	86	73	13
AVERAGE		16.47	8.49	1.93	65	83	72	50
KEC								
	1	9.78	6.39	1.53	25	87	60	4
	2	17.11	7.51	2.28	73	74	67	10
	3	9.74	6.05	1.61	28	73	61	7
AVERAGE		12.21	6.65	1.81	42	78	63	21
MPL								
	1	8.84	4.81	1.84	32	49	67	5
	2	18.80	11.39	1.65	110	76	75	9
AVERAGE		13.82	8.10	1.74	71	62	71	14
NYE								
	1	23.45	13.96	1.68	82	90	63	12
	2	17.47	10.06	1.74	51	95	63	5
	3	14.14	7.89	1.79	46	89	69	10
	4	18.52	9.40	1.97	66	82	60	12
	5	13.36	8.35	1.60	42	87	66	5
AVERAGE		17.39	9.93	1.76	57	89	64	44
PGE								
	2	25.35	12.59	2.01	108	79	74	13
	3	19.60	9.89	1.98	80	79	73	11
	4	12.92	6.28	2.06	68	70	72	5
AVERAGE		19.29	9.59	2.02	85	76	73	29
POR								
	1	26.03	12.37	2.10	97	101	71	13
	2	19.82	9.56	2.07	73	91	63	11
	3	25.02	12.99	1.93	106	91	62	11
	4	22.36	11.89	1.88	75	112	69	1
AVERAGE		23.31	11.70	2.00	88	99	66	36

SUMMARY OF EUS FIELD DATA BY UTILITY AND UNIT (CONT'D)
-ALL DATA CLASSES

UTIL	UNIT	AVERAGES KWHR/D	KWHP/D	COP	GAL/D	DT(F)	AMB(F)	UNIT MOS
PSI								
	1	19.00	8.35	2.27	66	88	71	11
	2	8.76	4.21	2.08	29	85	78	6
	3	16.80	8.13	2.07	64	90	74	13
	4	20.06	10.78	1.86	78	85	67	12
	5	17.16	9.72	1.76	60	90	69	8
AVERAGE		16.36	8.24	2.01	59	88	72	50
SRE								
	1	18.04	10.88	1.66	69	90	59	14
	2	23.23	12.69	1.83	95	95	68	12
	3	9.33	5.75	1.62	28	89	73	12
AVERAGE		16.87	9.77	1.70	64	91	67	38
SCE								
	1	8.30	5.59	1.49	29	69	62	5
	2	18.11	9.98	1.81	89	64	61	12
	3	14.39	7.18	2.00	60	67	68	12
	4	25.60	13.63	1.88	148	64	70	10
AVERAGE		16.60	9.09	1.80	81	66	65	39
SCL								
	1	13.69	7.29	1.88	59	87	87	9
	2	8.92	4.42	2.02	31	70	70	9
	4	14.80	7.46	1.98	57	82	84	10
	5	19.90	12.98	1.53	81	87	72	8
AVERAGE		14.33	8.04	1.85	57	82	78	36
TVA								
	2	29.81	14.79	2.02	126	89	75	6
	3	14.53	8.05	1.81	59	79	71	6
	4	16.22	9.70	1.67	64	87	72	6
AVERAGE		20.19	10.85	1.83	83	85	73	18
VRE								
	1	13.99	6.05	2.31	37	108	72	3
	2	18.84	10.86	1.73	57	113	49	5
AVERAGE		16.41	8.46	2.02	47	110	60	8

SUMMARY OF EUS FIELD DATA BY UTILITY AND UNIT
-ONLY DATA CLASS 1

UTIL	UNIT	AVERAGES KWHR/D	KWHP/D	COP	GAL/D	DT(F)	AMB(F)	UNIT MOS
APS								
THERE IS NO DATA FOR CLASS 1								
BPA								
	2	9.59	5.81	1.65	28	77	67	1
	4	17.04	10.00	1.70	70	79	73	2
AVERAGE		13.31	7.90	1.68	49	78	70	3
DPC								
	3	11.47	5.95	1.93	41	83	71	2
	4	44.50	21.71	2.05	69	70	84	1
AVERAGE		27.99	13.83	1.99	55	76	78	3
FPL								
	2	29.67	13.61	2.18	162	69	75	1
	4	25.36	13.00	1.95	148	64	88	1
AVERAGE		27.51	13.31	2.07	155	67	82	2
GVE								
	2	10.07	5.44	1.85	64	52	91	1
	3	13.28	8.51	1.56	69	55	83	4
	4	15.00	8.27	1.81	82	57	80	5
AVERAGE		12.78	7.41	1.74	72	55	85	10
GPC								
	1	13.07	7.53	1.73	56	75	71	5
	2	10.40	5.61	1.85	40	70	71	12
	4	13.89	6.86	2.02	55	71	73	12
	5	15.95	7.33	2.18	72	70	75	10
AVERAGE		13.33	6.83	1.95	55	71	73	39
HEC								
	2	35.49	16.40	2.16	211	70	76	4
	3	31.75	15.84	2.00	138	76	71	2
	4	11.87	5.87	2.02	52	63	74	6
AVERAGE		26.37	12.71	2.06	133	70	74	12

SUMMARY OF EUS FIELD DATA BY UTILITY AND UNIT (CONT'D)
-ONLY DATA CLASS 1

UTIL	UNIT	AVERAGES KWHR/D	KWHP/D	COP	GAL/D	DT(F)	AMB(F)	UNIT MOS
IPL								
	1	15.57	7.69	2.02	57	84	68	6
	2	21.34	10.91	1.96	88	83	67	8
	3	12.50	7.85	1.59	40	93	69	7
	4	25.98	13.16	1.97	100	88	69	6
AVERAGE		18.85	9.90	1.89	71	87	68	27
KGE								
	1	19.70	10.34	1.90	61	95	61	2
	2	13.17	6.89	1.91	45	90	68	1
	3	17.38	8.73	1.99	79	73	80	3
	4	19.83	10.54	1.88	68	99	73	2
AVERAGE		17.52	9.13	1.92	63	89	70	8
KEC								
	2	16.95	7.91	2.14	71	78	68	3
AVERAGE		16.95	7.91	2.14	71	78	68	3
MPL								
	1	8.90	4.79	1.86	31	52	66	4
	2	16.61	9.53	1.74	95	72	79	5
AVERAGE		12.76	7.16	1.80	63	62	73	9
NYE								
	3	13.50	8.28	1.63	49	85	69	1
	4	19.32	10.06	1.92	71	86	56	4
AVERAGE		16.41	9.17	1.78	60	85	63	5
PGE								
	4	13.46	8.47	1.59	60	73	56	1
AVERAGE		13.46	8.47	1.59	60	73	56	1
POR								
	1	24.69	11.77	2.10	95	99	72	9
	2	20.25	9.93	2.04	75	90	64	8
	3	24.84	15.80	1.57	114	92	59	4
AVERAGE		23.26	12.50	1.90	94	93	65	21

SUMMARY OF EUS FIELD DATA BY UTILITY AND UNIT (CONT'D)
-ONLY DATA CLASS 1

UTIL	UNIT	AVERAGES KWHR/D	KWHP/D	COP	GAL/D	DT(F)	AMB(F)	UNIT MOS
PSI								
	1	18.24	8.24	2.21	68	87	71	7
	2	9.75	5.24	1.86	32	79	57	1
	3	17.04	8.39	2.03	65	92	74	8
	4	19.72	10.54	1.87	79	83	66	7
	5	19.79	11.87	1.67	61	99	67	2
AVERAGE		16.91	8.86	1.93	61	88	67	25
SRE								
	1	20.82	11.42	1.82	75	88	57	3
	2	23.45	12.81	1.83	93	96	67	9
AVERAGE		22.13	12.12	1.83	84	92	62	12
SCE								
THERE IS NO DATA FOR CLASS 1								
SCL								
	1	11.25	6.50	1.73	54	71	84	2
	2	7.04	3.50	2.01	25	64	72	4
	4	16.88	8.34	2.02	66	81	77	4
AVERAGE		11.72	6.11	1.92	48	72	78	10
TVA								
	3	14.36	7.71	1.86	60	77	73	4
AVERAGE		14.36	7.71	1.86	60	77	73	4
VRE								
THERE IS NO DATA FOR CLASS 1								

SUMMARY OF EUS FIELD DATA BY UTILITY AND UNIT
-ONLY DATA CLASS 2

UTIL	UNIT	AVERAGES KWHR/D	KWHP/D	COP	GAL/D	DT(F)	AMB(F)	UNIT MOS
APS								
	3	7.90	4.17	1.89	47	61	92	4
AVERAGE		7.90	4.17	1.89	47	61	92	4
BPA								
	2	11.84	6.30	1.88	44	78	69	6
	3	32.41	15.31	2.12	141	83	73	6
	4	18.81	8.43	2.23	67	83	71	4
AVERAGE		21.02	10.01	2.08	84	81	71	16
DPC								
	1	16.44	9.78	1.68	80	76	81	2
	2	11.00	5.50	2.00	28	71	67	1
AVERAGE		13.72	7.64	1.84	54	74	74	3
FPL								
	2	23.64	10.88	2.17	137	67	80	3
	3	6.88	2.95	2.33	34	54	76	4
	4	26.98	16.61	1.62	152	68	82	3
AVERAGE		19.17	10.15	2.04	108	63	79	10
GVE								
	1	10.34	5.20	1.99	42	65	74	6
	2	13.24	7.68	1.72	64	64	83	4
	3	12.94	6.25	2.07	65	66	78	3
	4	6.62	3.60	1.84	41	43	71	1
	5	32.52	20.67	1.57	198	74	65	5
AVERAGE		15.13	8.68	1.84	82	62	74	19
GPC								
	1	15.00	9.27	1.62	66	77	69	2
	3	18.75	8.48	2.21	96	74	85	1
	5	11.58	5.09	2.28	56	70	81	2
AVERAGE		15.11	7.61	2.03	73	74	78	5
HEC								
	2	35.57	15.79	2.25	197	75	78	4
	3	24.11	12.99	1.86	130	71	75	6
	4	9.93	5.19	1.91	48	70	79	2
AVERAGE		23.20	11.32	2.01	125	72	77	12

SUMMARY OF EUS FIELD DATA BY UTILITY AND UNIT (CONT'D)
-ONLY DATA CLASS 2

UTIL	UNIT	AVERAGES KWHR/D	KWHP/D	COP	GAL/D	DT(F)	AMB(F)	UNIT MOS
IPL								
	1	12.65	6.53	1.94	51	81	73	9
	2	22.33	12.25	1.82	99	81	69	7
	3	11.24	6.59	1.70	35	83	72	3
	4	19.67	9.91	1.99	88	85	69	9
AVERAGE		16.47	8.82	1.86	68	82	71	28
KGE								
	1	14.20	7.35	1.93	49	82	70	7
	2	13.41	6.63	2.02	48	79	69	8
	3	25.55	12.18	2.10	108	84	80	7
	4	15.29	7.96	1.92	54	86	73	8
AVERAGE		17.11	8.53	1.99	64	83	73	30
KEC								
	2	16.21	7.21	2.25	74	66	69	3
	3	8.04	4.34	1.85	25	74	67	2
AVERAGE		12.13	5.78	2.05	49	70	68	5
MPL								
	1	8.57	4.87	1.76	34	38	68	1
	2	21.55	13.71	1.57	128	80	71	4
AVERAGE		15.06	9.29	1.67	81	59	69	5
NYE								
	1	21.30	12.98	1.64	76	89	64	6
	2	17.84	10.63	1.68	54	98	60	2
	3	14.06	7.64	1.84	46	90	70	8
	4	18.28	8.70	2.10	64	80	62	6
	5	12.45	7.91	1.57	40	84	67	4
AVERAGE		16.79	9.57	1.77	56	88	65	26
PGE								
	2	27.11	13.30	2.04	115	81	74	12
	3	20.81	10.01	2.08	81	80	73	8
	4	12.79	5.73	2.23	71	69	76	4
AVERAGE		20.23	9.68	2.12	89	76	74	24
POR								
	1	29.04	13.73	2.12	101	107	71	4
	2	18.69	8.56	2.18	67	93	60	3
	3	25.12	11.39	2.21	102	90	64	7
	4	22.36	11.89	1.88	75	112	69	1
AVERAGE		23.80	11.39	2.10	86	100	66	15

SUMMARY OF EUS FIELD DATA BY UTILITY AND UNIT (CONT'D)
-ONLY DATA CLASS 2

UTIL	UNIT	AVERAGES KWHR/D	KWHP/D	COP	GAL/D	DT(F)	AMB(F)	UNIT MOS
PSI								
	1	20.32	8.56	2.37	62	91	70	4
	2	8.57	4.00	2.14	29	86	82	5
	3	16.40	7.70	2.13	63	86	75	5
	4	22.10	12.15	1.82	82	89	67	4
	5	16.85	9.53	1.77	61	91	71	5
AVERAGE		16.85	8.39	2.05	59	88	73	23
SRE								
	1	17.22	11.85	1.45	67	91	56	5
	2	26.19	13.16	1.99	110	93	72	1
	3	9.91	5.96	1.66	29	87	72	7
AVERAGE		17.77	10.32	1.70	69	91	67	13
SCE								
	1	8.65	5.80	1.49	29	71	61	4
	2	18.32	10.28	1.78	92	65	61	8
	3	13.68	6.74	2.03	57	66	70	8
	4	24.87	13.13	1.89	138	64	71	6
AVERAGE		16.38	8.99	1.80	79	67	66	26
SCL								
	1	14.12	7.15	1.97	60	91	91	6
	2	10.43	5.15	2.03	37	75	69	5
	4	13.41	6.88	1.95	51	82	88	6
	5	19.36	12.29	1.58	78	87	72	7
AVERAGE		14.33	7.87	1.88	56	84	80	24
TVA								
	2	32.00	15.59	2.05	133	93	76	5
	3	14.88	8.72	1.71	59	83	69	2
	4	16.22	9.70	1.67	64	87	72	6
AVERAGE		21.03	11.34	1.81	85	88	72	13
VRE								
	1	13.99	6.05	2.31	37	108	72	3
	2	22.19	11.50	1.93	60	120	49	1
AVERAGE		18.09	8.77	2.12	48	114	60	4

SUMMARY OF EUS FIELD DATA BY UTILITY AND UNIT
-ONLY DATA CLASS 3

UTIL	UNIT	AVERAGES KWHR/D	KWHP/D	COP	GAL/D	DT(F)	AMB(F)	UNIT MOS
APS								
THERE IS NO DATA FOR CLASS 3								
BPA								
	2	21.18	12.83	1.65	90	76	63	1
	3	19.29	14.84	1.30	130	89	76	1
	4	16.72	6.48	2.58	50	77	72	1
AVERAGE		19.06	11.38	1.84	90	81	70	3
DPC								
	1	22.83	15.72	1.45	97	77	61	7
	2	10.44	5.57	1.88	30	69	73	4
AVERAGE		16.63	10.64	1.66	63	73	67	11
FPL								
	1	7.37	4.39	1.68	28	61	68	2
	2	24.07	12.42	1.94	99	76	76	9
	3	8.77	4.70	1.87	31	64	76	11
	4	28.13	21.29	1.32	169	61	83	6
AVERAGE		17.09	10.70	1.70	81	66	76	28
GVE								
	1	13.38	6.79	1.97	50	61	72	4
	2	11.04	5.33	2.07	65	81	88	3
	3	15.01	8.53	1.76	81	71	80	2
AVERAGE		13.14	6.88	1.93	65	71	80	9
GPC								
	1	10.18	5.91	1.72	66	62	77	4
	3	15.64	7.05	2.22	80	81	84	1
AVERAGE		12.91	6.48	1.97	73	72	81	5
HEC								
THERE IS NO DATA FOR CLASS 3								

SUMMARY OF EUS FIELD DATA BY UTILITY AND UNIT (CONT'D)
-ONLY DATA CLASS 3

UTIL	UNIT	AVERAGES KWHR/D	KWHP/D	COP	GAL/D	DT(F)	AMB(F)	UNIT MOS
IPL								
	1	18.57	9.52	1.95	63	102	75	1
AVERAGE		18.57	9.52	1.95	63	102	75	1
KGE								
	1	12.09	8.18	1.48	51	78	71	4
	2	9.55	5.85	1.63	33	80	56	3
	3	21.78	11.13	1.96	140	95	78	2
	4	16.14	7.61	2.12	59	79	73	3
AVERAGE		14.89	8.20	1.80	71	83	69	12
KEC								
	1	9.78	6.39	1.53	25	87	60	4
	2	17.90	7.43	2.41	73	78	63	4
	3	10.42	6.73	1.55	29	73	59	5
AVERAGE		12.70	6.85	1.83	42	79	61	13
MPL								
THERE IS NO DATA FOR CLASS 3								
NYE								
	1	25.61	14.93	1.71	87	91	62	6
	2	17.23	9.67	1.78	49	94	65	3
	3	15.36	9.54	1.61	39	87	61	1
	4	17.61	10.20	1.73	64	83	63	2
	5	17.00	10.12	1.68	48	99	63	1
AVERAGE		18.56	10.89	1.70	57	91	63	13
PGE								
	2	4.22	4.06	1.04	20	65	72	1
	3	16.40	9.56	1.71	80	76	74	3
AVERAGE		10.31	6.81	1.38	50	71	73	4
POR								
THERE IS NO DATA FOR CLASS 3								

SUMMARY OF EUS FIELD DATA BY UTILITY AND UNIT (CONT'D)
-ONLY DATA CLASS 3

UTIL	UNIT	A V E R A G E S KWHR/D	KWHP/D	COP	GAL/D	DT(F)	AMB(F)	UNIT MOS
PSI								
	4	14.36	7.00	2.05	58	84	81	1
	5	13.43	6.39	2.10	52	70	66	1
AVERAGE		13.89	6.70	2.08	55	77	74	2
SRE								
	1	17.34	9.80	1.77	67	89	62	6
	2	20.80	11.92	1.75	97	92	72	2
	3	8.51	5.45	1.56	25	92	74	5
AVERAGE		15.55	9.06	1.69	63	91	69	13
SCE								
	1	6.93	4.75	1.46	28	60	66	1
	2	17.69	9.38	1.89	83	64	62	4
	3	15.81	8.06	1.96	66	68	63	4
	4	26.70	14.37	1.86	165	65	69	4
AVERAGE		16.78	9.14	1.79	85	64	65	13
SCL								
	1	16.00	9.70	1.65	68	96	70	1
	5	23.64	17.78	1.33	98	91	66	1
AVERAGE		19.82	13.74	1.49	83	94	68	2
TVA								
	2	18.86	10.78	1.75	88	65	70	1
AVERAGE		18.86	10.78	1.75	88	65	70	1
VRE								
	2	18.00	10.70	1.68	57	111	49	4
AVERAGE		18.00	10.70	1.68	57	111	49	4

APPENDIX D

SUMMARY OF PHASE II WORK BY TASK

TASK 1

Develop final specifications and engineering design of the optimized heat pump water heater and of the pilot run manufacturing facility. Major work items include completion of final design, preparation of heat pump water heater specifications and drawings, design of pilot run tools and fixtures, completion of final design of instrumentation package, selection of suppliers, preparation of detailed pilot run cost estimates, preparation of pilot run facility layout, and submission of Task 1 report covering these items.

TASK 2

Prepare facility for pilot run. Major work items include purchasing of tools and equipment, ordering of material and components for 88 new units and 25 retrofit units, pre-pilot run checkout of assembly procedure, and purchasing of pilot run supplies.

TASK 3

Construct and test three pilot run prototypes. Major work items include assembly of three prototype units, laboratory testing of one prototype, submission of test results to ORNL, and sending prototypes to Underwriters Laboratory (UL) for testing and approval.

TASK 4

Manufacture and test heat pump water heaters, instrumentation packages, and service parts. Major work items include assembly and testing of 88 new units and 25 retrofit units, assembly and testing of instrumentation panels, packaging and shipping of equipment, and submission of report summarizing Task 3 experience to ORNL.

TASK 5

Train utility service personnel for method of installation, servicing, and

data monitoring and collection. Work items include utility selection and contractual agreements and conducting training sessions for utility personnel at the pilot plant.

TASK 6

Install heat pump water heaters and instrumentation packages in preselected locations and monitor operation. Major work items include installation, monitoring assistance, data reduction and analysis, servicing installations as necessary, summarizing data, and submission of report to ORNL.

TASK 7

Analyze and evaluate results of a 12-month field demonstration and prepare a final report for ORNL. Revise market analysis based on field experience and make recommendations for further work which could accelerate commercialization of the heat pump water heater.

TASK 8

Make special presentations as requested by ORNL. Submit 24 monthly reports.