CONF-820849--2

DE82 020810

A COMPARISON OF LABORATORY AND FIELD-TEST MEASUREMENTS OF HEAT-PUMP WATER HEATERS

W. P. Levins
Energy Division
Oak Ridge National Laboratory*
Oak Ridge, Tennessee 37830

For Presentation at the
ACEEE 1982 Summer Study
Santa Cruz, California

August 21-28, 1982

By acceptance of this article, the publisher or recipient acknowledges the U.S. Government's right to retain a nonexclusive, royalty-free license in and to any copyright covering the article.

A COMPARISON OF LABORATORY AND FIELD-TEST MEASUREMENTS OF HEAT PUMP WATER HEATERS

William P. Levins
Energy Division
Oak Ridge National Laboratory
Oak Ridge, Tennessee 37830

ABSTRACT

The Oak Ridge National Laboratory (ORNL) subcontract Energy Utilization Systems of Pittsburgh, PA, in 1977 to develop a heat pump water heater (HPWH). After developing the HPWH, a field-test plan was implemented whereby 20 U.S. utilities each received five units for a one-year test period. During the field tests, ORNL tested two of the prototype HPWHs identical to the field-test units in the laboratory. The ORNL experience proved extremely valuable in both realigning the field-test procedures and in analyzing the field-test data. A comparison of the laboratory and the field-test data was excellent on an overall basis but showed differences for parametric temperature sensitivities. Field-test data for the effect of the HPWH on the house heating system were not overly conclusive, but laboratory test data were used to analytically evaluate this effect.

INTRODUCTION

Domestic water heaters account for approximately 2.5 EJ (2.4×10^{15} Btu) or 15% of the total primary energy consumed to supply the residential sector. Of the 76 million households in the United States, about 31 million contain an electric resistance water heater. Initial estimates were that a heat pump water heater (HPWH) could save from 50 to 70% of the energy used by an electric resistance water heater (RWH). With a potential annual primary energy savings of 0.94 EJ (0.89×10^{15} Btu) as a goal, Oak Ridge National Laboratories (ORNL) subcontracted with Energy Utilization Systems (EUS) of Pittsburgh, PA, in 1977 to develop a HPWH and subsequently verify its performance and reliability in a national field test demonstration.

The HPWH developed by EUS was an integral-type unit mounted atop a 310 ℓ (82 gal) insulated water storage tank. The HPWH used R-12 as the refrigerant and ambient air as the heat source. A cutaway view of the EUS HPWH is shown in Figure 1. The HPWH has a capacity of 2.2 kW (7500 Btu/hr) in the heat pump mode. The HPWH also contains two 2500-watt resistance elements, one of which can operate in parallel with the heat pump to augment recovery if necessary.

The field test demonstration of the HPWH involved 85 HPWH's divided among 20 different utilities. Figure 2 shows the location of the utilities. The HPWH's were installed between March 1979 and January 1980 in private residences by either utility personnel or utility-hired contractors.

The purposes of the field test were:

1. Document the performance of the HPWH.
2. Determine the reliability of the HPWH.
3. Document the effect of the HPWH on the house heating-cooling (HVAC) system.

ORNL-DWG 80-18717

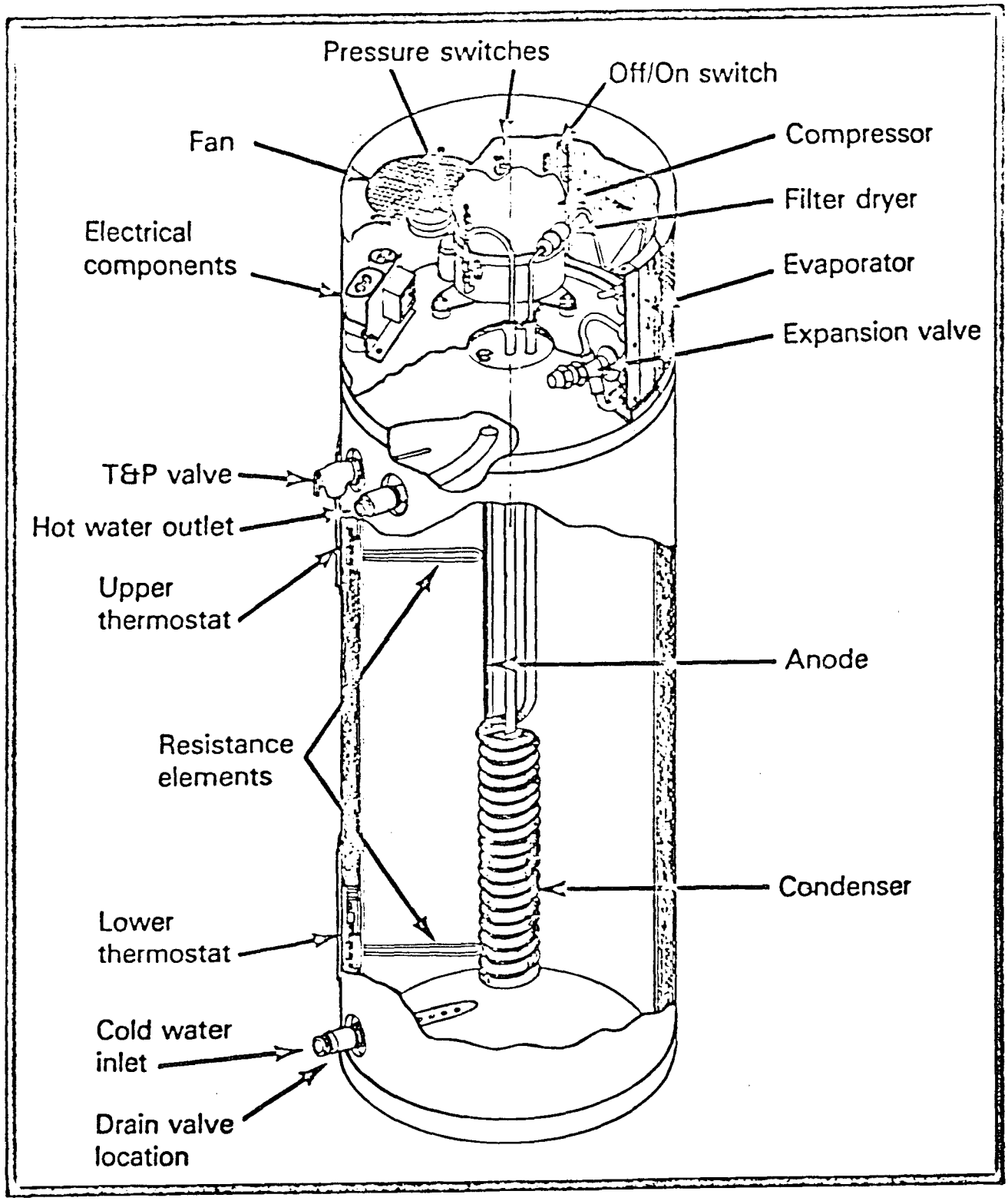

Figure 1. Cutaway Drawing of EUS Heat Pump Water Heater

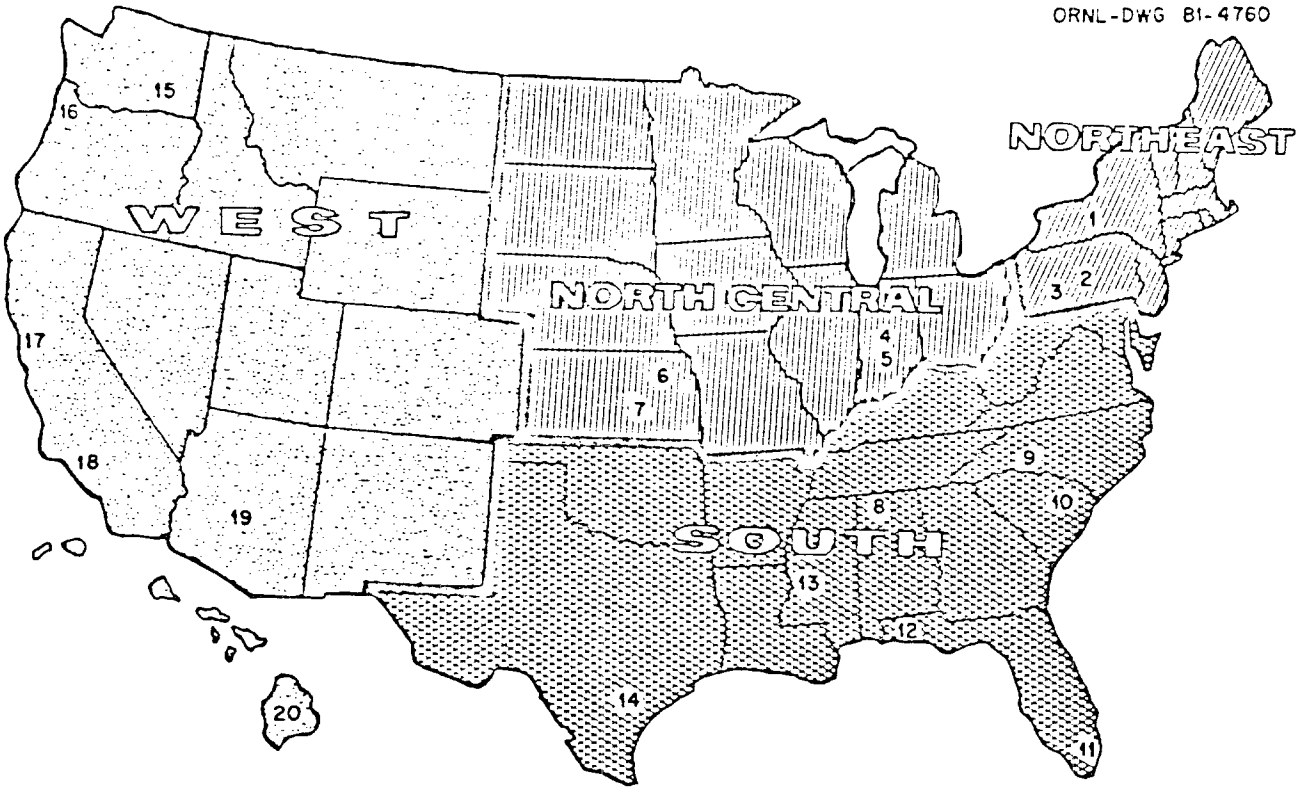

REGION		UTILITY	STATE
NORTHEAST	1	NEW YORK STATE ELECTRIC AND GAS	NY
	2	VALLEY RURAL ELECTRIC CO-OP	PA
	3	SOMERSET RURAL ELECTRIC CO-OP	PA
NORTHCENTRAL	4	INDIANAPOLIS POWER AND LIGHT	IN
	5	PUBLIC SERVICE OF INDIANA	IN
	6	KANSAS ELECTRIC COOPERATIVES	KS
	7	KANSAS GAS AND ELECTRIC	KS
SOUTH	8	TENNESSEE VALLEY AUTHORITY	AL
	9	DUKE POWER COMPANY	NC
	10	SOUTH CAROLINA ELECTRIC AND GAS COMPANY	SC
	11	FLORIDA POWER AND LIGHT	FL
	12	GULF POWER COMPANY	FL
	13	MISSISSIPPI POWER AND LIGHT	MS
	14	GUADALUPE VALLEY ELECTRIC CO-OP	TX
WEST	15	BONNEVILLE POWER ADMINISTRATION	WA
	16	PORTLAND GENERAL ELECTRIC	OR
	17	PACIFIC GAS AND ELECTRIC	CA
	18	SOUTHERN CALIFORNIA EDISON COMPANY	CA
	19	ARIZONA POWER SERVICE	AZ
	20	HAWAIIAN ELECTRIC COMPANY	HI

Figure 2. Locations of Participating Utilities

Each installation contained an instrumentation package to measure hot water usage, HPWH and resistance element kWh usage, house HVAC kWh usage for water heater operation in both resistance and heat pump modes, ambient temperature, and delivery-water temperature. The inlet-water temperature was monitored in one installation of each utility. Figure 3 is a schematic diagram of the field-test instrumentation package.

The field test was initially set up so that the water heater would alternately operate in the heat pump mode for one day and in the resistance mode for one day. Utility personnel were responsible for the installation and maintenance of the water heaters and the collection of the data. EUS personnel reduced and analyzed the data, and maintained the instrumentation. Shortly after the field test was started, two of the prototype HPWH's and one instrumentation package were sent to ORNL for laboratory testing designed to simulate the field testing. One of the prototypes was connected to the EUS instrumentation package, and both prototypes were monitored by a computer controlled data acquisition system (DAS). The DAS also controlled the simulated water-draw schedules of the water heaters via solenoid valves in the tank hot water outlet lines.

Also tested with the two HPWH's was a RWH which used the same model water storage tank as the HPWH. The DAS also monitored and controlled the RWH. All three water heaters were tested side-by-side under the same simulated daily draw schedule of 243 ℓ (64.3 gal).

Field Test Experiences

Overall, the field test was extremely beneficial and provided a great deal of needed information about HPWH's. The parallel ORNL laboratory testing confirmed many of the results of the field test

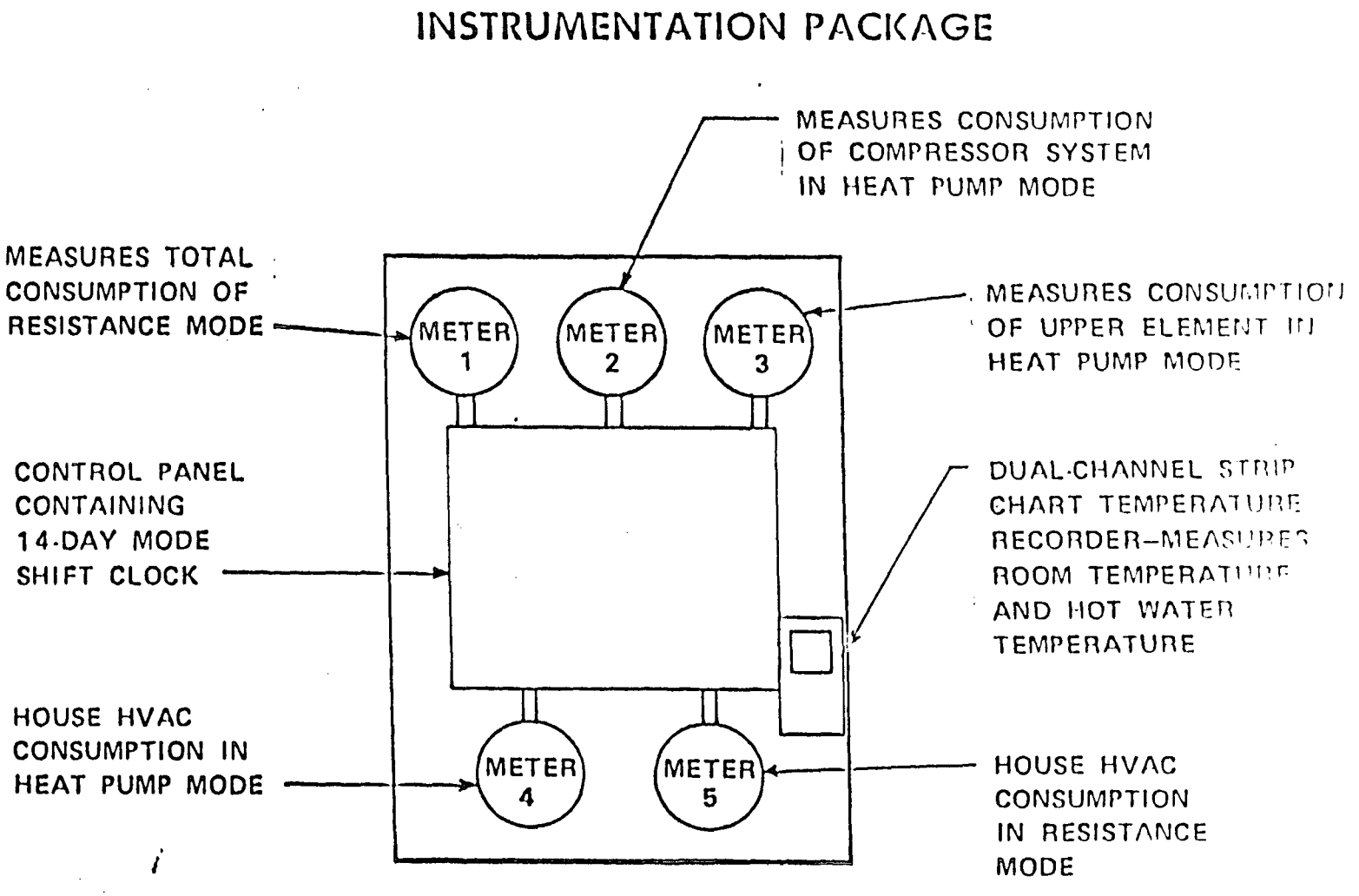

Figure 3. Schematic Diagram of Field Test Instrumentation Package

and also supplied detailed data to bridge gaps in field test data and to realign some of the field-test procedures.

As is the case in most demonstrations of new and untried products, however, several problem areas were noted shortly after the start. The problem areas involved:

1. Prototype Equipment Design
2. Workmanship
3. Shipping Damage
4. Installation
5. EUS-Utilities Communication
6. Field Test Design
7. Data Collection

The first three problem areas are interrelated as some of the shortcomings in the equipment and poor workmanship did not show up in the laboratory, but emerged when the prototype units were shipped. About half of the HPWH's developed leaks and were low on refrigerant upon startup. The refrigerant leaks, caused by poorly constructed tubing joints, were aggravated by handling and by shipping vibrations. Other problems were caused by the evaporator condensate collector tray, the fan blades and the fan motor mounts, and the water tank-condenser opening flange. These problems were rectified in the field.

Improper installation of the HPWH such as putting it in an enclosed area where air could not circulate or putting it in an area where the temperature could go below freezing, also occurred in spite of instructions to the contrary.

The communication link between EUS and the sponsoring utility personnel was often weak either because of personnel transfers, or a lack of understanding of the field test operational procedures within the utility.

The initial design of the field test caused some surprises when the water heater was alternately switched on a daily basis between the heat pump and resistance modes of operation. There was a tendency for people to adjust their lifestyles — they appeared to do most of their bathing and laundry on those days when the HPWH was operating in the heat pump mode. Also, the temperature of the delivered hot water was about 8°F higher in the heat pump mode than it was in the resistance mode.

An involved calculational procedure was developed which corrected for the inequalities of the daily operation. Data taken from the laboratory unit was used to verify the calculation. However, both EUS and ORNL felt that an alternating weekly heat pump-resistance mode of operation would both increase the accuracy of the data and decrease the effects of lifestyle alteration on the results. Conversely, it detracted somewhat from ability to smear out weather effects relative to determining effects on HVAC.

The field test instrumentation package (Figure 3) worked well with the exception of the temperature recorders. These devices required in-field calibration at many sites and were a constant source of questionable data until a periodic in-field manual temperature comparison was implemented in the program. Figure 4 shows samples of data tapes from the temperature monitors. The analysis of these tapes was both difficult and tedious.

The instrumentation used at ORNL included a computer-controlled DAS. The computer also controlled the draw schedule of the laboratory HPWH so that it simulated the usage of a family of four persons as specified in the DOE test procedures for water heaters. A sample daily output from this system is shown in Figure 5. The computer scanned the temperatures every five seconds during hot water draw periods, so the temperature shown on Fig. 5 are the averaged temperatures during that particular draw period. The data reduction and analysis from the

SAMPLE FIELD TEST DATA TAPES

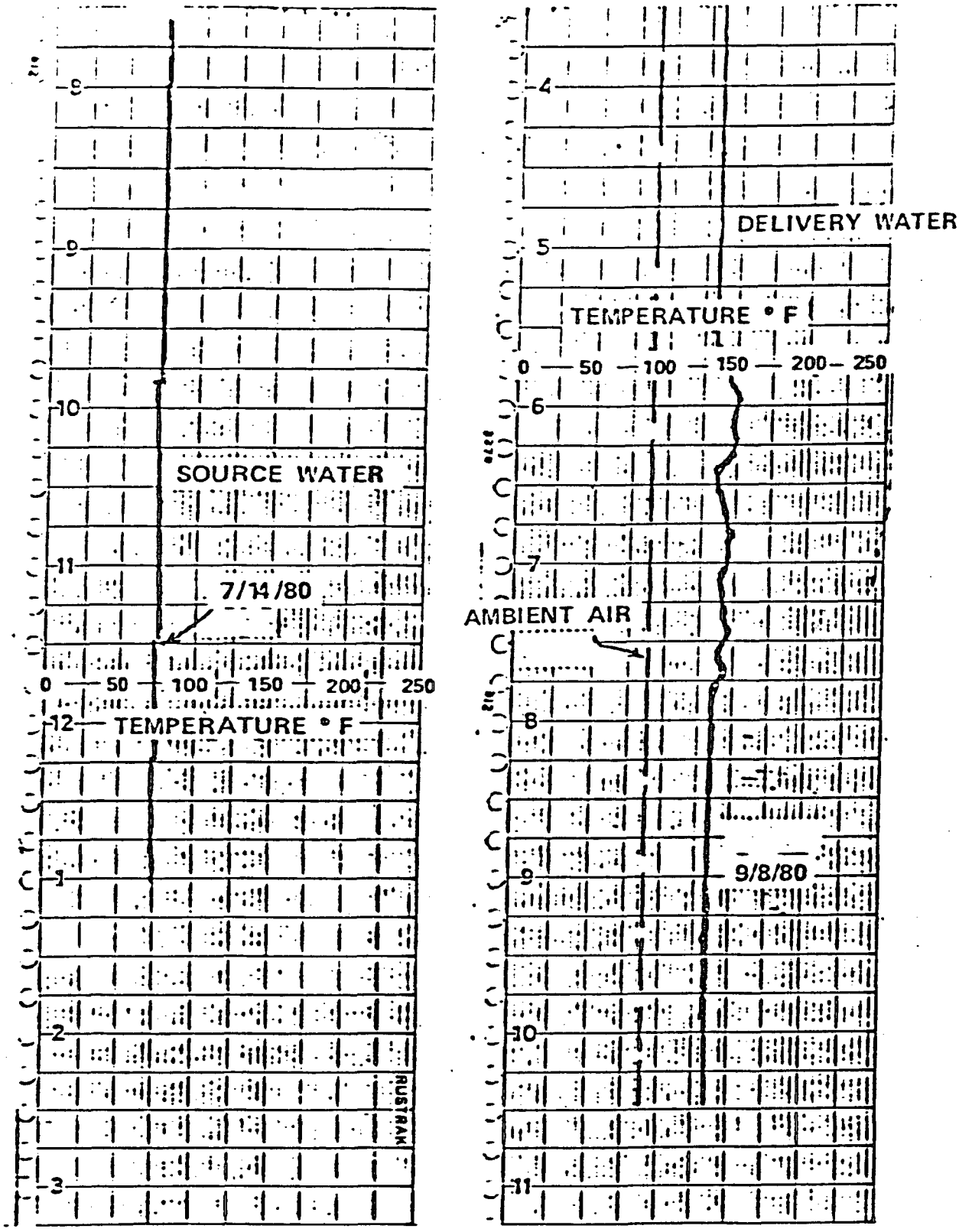

Figure 4. Sample Field Test Data Tapes

SUMMARY OF HEAT PUMP WATER HEATER TESTING FOR 5/27/81

	EUS CYCLING TEMP(DEG F)		MOR-FLO RES TEMP(DEG F)		EUS HT PUMP TEMP(DEG F)		FDRS 82HP TEMP(DEG F)		AIR TEMP
TIME	OUT	IN	OUT	IN	OUT	IN	OUT	IN	(F)
1800	131.8	69.1	140.6	65.4	143.3	64.4	137.4	63.2	86
1900	133.6	64.7	140.9	63.9	145.0	63.8	149.8	63.0	85
1930	133.4	65.5	140.0	64.4	144.5	63.8	141.3	62.8	84
2200	133.3	69.3	138.9	65.7	143.4	64.5	148.0	63.2	85
2230	134.4	66.4	140.7	64.7	144.6	64.2	150.5	63.4	84
700	132.2	68.9	139.7	65.1	143.2	64.2	139.9	63.1	83
730	133.9	66.1	140.9	64.5	144.6	64.1	143.9	63.4	82
930	133.9	64.9	140.7	63.8	147.1	63.6	148.1	62.9	85
1200	133.7	68.2	139.8	64.8	144.8	63.9	150.5	62.7	84
AVE	133.5	66.3	140.4	64.4	145.0	63.9	146.5	63.0	84

The average daily temp was 84

EUS CYC RES KWH METER	5162.8	USAGE TODAY	13.8
EUS CYC HP KWH MTR RDG	2940.2	USAGE TODAY	0.0
EUS CYC WATER MTR RDG	180166.1	USAGE TODAY	67.3
MOR-FLO RES KWH MTR RDG	6578.0	USAGE TODAY	16.4
MOR-FLO WATER MTR RDG	48029.6	USAGE TODAY	67.9
EUS HP KWH MTR RDG	7994.1	USAGE TODAY	7.6
EUS HP WATER MTR RDG	41613.2	USAGE TODAY	65.8
ETECH KWH MTR RDG	673.3	USAGE TODAY	10.8
ETECH WATER MTR RDG	231858.4	USAGE TODAY	69.8

The first temp storage file # is 19.00
The last temp storage file# is 27.00
The previous meter rdgs are in file # 28.00

TO CONTINUE PRESS "RUN"; THE FIRST FILE # IS 29.00

Figure 5. Sample of Daily ORNL Data System Output

much more elaborate (and expensive) ORNL system was simple, straightforward, and accurate.

After the EUS temperature data tapes were analyzed for any particular site, it was necessary to adjust or normalize the usage data so that a comparison could be made for that site between heat pump and resistance operational modes. Temperature, usage, and operating time differences for each data collection period between the heat pump and resistance modes of operation can make direct comparison of kWh meter readings an extremely erroneous procedure. Figure 6 shows an example of the field test data in which direct meter readings show a COP of 1.35, while the normalized data show a COP of 2.00. Once again, data from the ORNL laboratory testing was used to verify the normalizing calculations.

Incomplete data returns from the field caused by instrument failure or calibration, faulty equipment operation, misread meters, power failures, etc., led to the formulation of data classification. Data classification was deemed necessary because it would allow the use of most of the data, yet still allow for explaining deviations from the norm. Figure 7 contains a map of the data classification scheme developed by EUS. The monthly data were put in classes 1, 2, 3 or "not usable" with class 1 data being the most reliable.

Results

Table 1 contains the results of the EUS field test data. The coefficient of performance (COP) of the HPWH is defined as the energy used by resistance mode operation divided by the energy used by heat pump operation, based on identical operating conditions. The overall average COP for 643 unit months was 1.93. The ORNL data for 70°F ambient, 60°F inlet water, 140°F outlet water, and 65 gallons/day usage was 1.94. These results are in excellent agreement. However, the

MONTHLY CALCULATION SHEET

Utility Indianapolis Reading Date 11-5-80

Site XXXX Prev. Read Date 10-8-80

	Water	M 1	M 2	M 3	M 4	M 5
This read	27658	3306	1796	32	392	379
Prev. read	26245	3164	1698	25	378	370
Δ	1413	142	98	7	14	9

-16

DH 14 DR 14 ZH 2 ZR 2 TH 151 TR 147

TI 60 mon. TA$_H$ 80 TA$_R$ 83 WR 545 WH 868

64 prev. -20

Data Class (1) 2 3

Temp. Correlations Next Page H

Raw C.O.P. 1.35 Adj. C.O.P. 2.00

```
EUS HP DATA ANALYSIS
        1413.        W
         142.       M1
          98.       M2
           7.       M3
          14.       DH
          14.       DR
           2.       ZH
           2.       ZR
         135.       TH
         131.       TR
          62.       TI
          62.       TA
           8.        H

  534.429168       WR
  878.570832       WH
 5.173274346       QT
 3.150307647       QJ
       0.796       QR
       0.796       QH
 212.7182234      M1C
 2.041049747      COP
```

```
 1.352380952     COPR


OPT. 3 *INPOT WR WH*

        545.      WR
        868.      WH

        545.       WR
        868.       WH
      5.2756       QT
 3.150307647       QJ
       0.796       QR
       0.796       QH
 208.0390235      M1C
 1.996485939      COP
```

Figure 6. Sample EUS Monthly Calculation Sheet

ORNL-DWG 82-8210

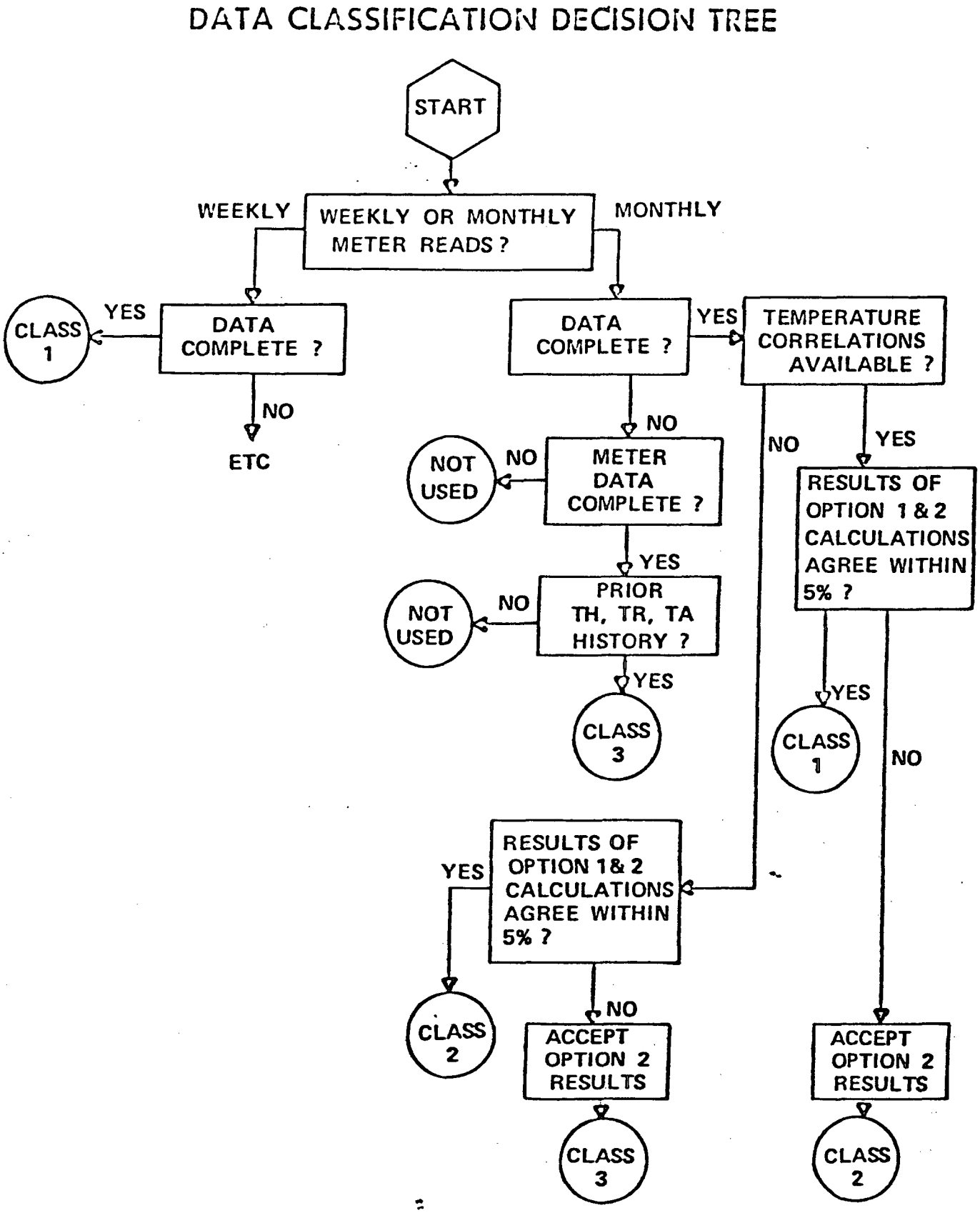

Figure 7. EUS Data Classification Decision Tree

Table 1. Results of EUS HPWH Field Test

Data Class	No. of Months	HPWH COP	Air Temp. (°F)	Water Temp. (°F) In	Water Temp. (°F) Out	Daily Water Gallons
1	194	1.95	71	61	140	72
2	306	1.97	72	60	140	76
3	143	1.81	69	62	138	67
All	643	1.93	71	61	140	73

results do not show the same sensitivites to inlet water, ambient air, and delivery water temperatures. Figures 8, 9, and 10 show these comparisons. The plotted points on the figures are normalized field data. The differences in the sensitivities are most likely due to better control of the laboratory environment, more accurate laboratory data, and less use of the resistance elements in the laboratory testing.

The field test data show the COP of the HPWH to be:

$$COP = 1.70 + 0.0104 \times TA - 0.0015 \times TI - 0.003 \times TD$$

where TA = Ambient Temperature (°F)
TI = Inlet Water Temperature (°F)
TD = Delivery Water Temperature

The laboratory data show the COP of the HPWH to be:

$$COP = 2.88 + 0.016 \times TA - 0.004 \times TI - 0.013 \times TD$$

The field-test parametric sensitivities were obtained by using a straightforward multiple linear-regression model. The use of a more complex statistical model limited to Class 1 data only, which includes utility-unit interactions, produces an ambient air sensitivity for the field test data equal to that of the laboratory data. However, it does not change the other two parametric sensitivities.

ORNL-DWG 82-8215

COP VS INLET TEMPERATURE FOR AMBIENT - 70°F
DELIVERY WATER - 140°F

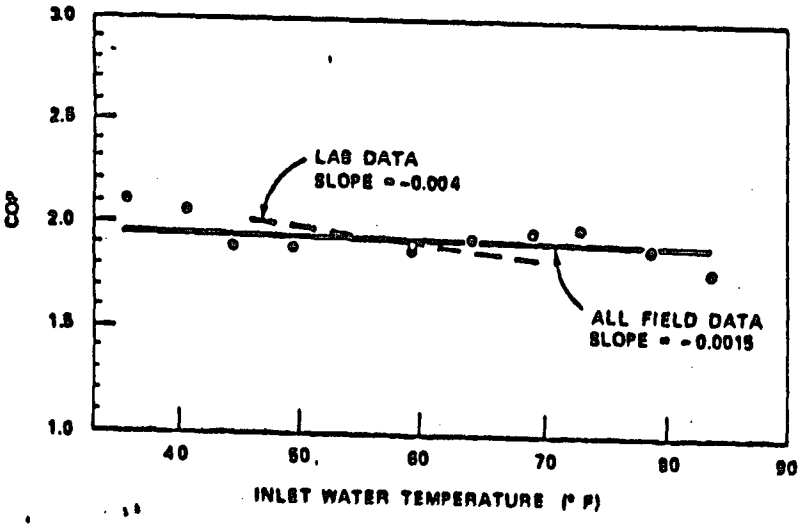

Figure 8

ORNL-DWG 82-8214

COP VS AMBIENT AIR TEMPERATURE FOR INLET WATER - 60°F
DELIVERY WATER - 140°F

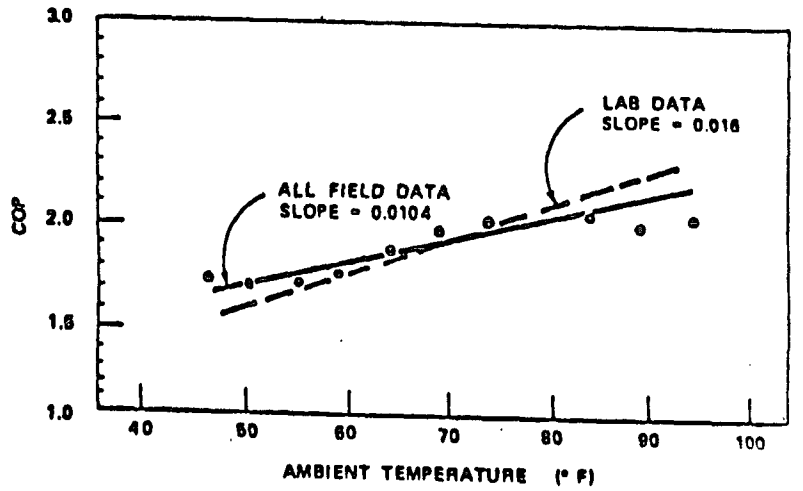

Figure 9

ORNL-DWG 82-8216

COP VS DELIVERY WATER TEMPERATURE FOR AMBIENT - 70°F
INLET WATER - 60°F

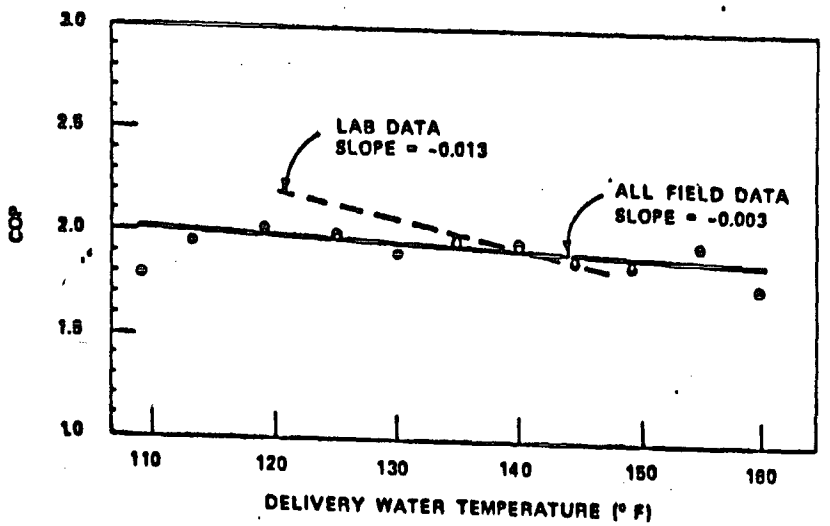

Figure 10

The data from the field test gave no valid quantitative information concerning the impact of a HPWH on the house HVAC. Information of this nature is extremely difficult to measure in the field, so it is not too surprising that the data were inconclusive.

However, the results of the laboratory-obtained HPWH performance parameters were used to analytically estimate the interaction of the HPWH on the house HVAC. Table 2 lists the results of the effect of location (climate) on the equivalent annual energy usage of a HPWH, RWH, and gas-fired water heater for various in-house and geographical locations and various HVAC equipment. Table 3 translates the results of Table 2 into annual operating costs, using the energy costs contained in Table 4. Figure 11 graphically depicts the effect of a HPWH located inside a house on the residential heating and cooling loads for each of the six U.S. climate zones (Regional Heating Load Hour Zones).

The results of Tables 2 and 3 may have many interpretations, but the estimates show that a HPWH can save energy and can be a cost effective alternative to the homeowner presently heating hot water with a RWH.

Conclusions

The combination of a HPWH field demonstration coupled with a parallel laboratory simulation proved to be mutually beneficial. The field test showed that once design-fabrication-handling problems were overcome, the HPWH can be a reliable, energy saving appliance. The laboratory simulation supplied information to explain some of the inconsistencies or inadequacies of the field test and to salvage some otherwise useless data.

Table 2

EFFECT OF LOCATION ON EQUIVALENT ANNUAL ENERGY USAGE (KWH) OF HPWH, ELECTRIC RESISTANCE, AND GAS-FIRED WATER HEATERS

City	HPWH Loc Inside House with HVAC Type			HPWH Loc in Uncond		Elec Res Water Heater In			Gas-Fired Water Heater In		
	Hi Eff HP	Res+A/C	60%B/O+A/C	Garage	Basement	Cond Sp	Garage	Basement	Cond Sp	Garage	Basement
Albuquerque	3532	4271	5164	3556	3394	6010	6084	6125	9616	9734	9800
Atlanta	3293	3906	4617	3223	3274	5839	5872	5944	9342	9395	9510
Boston	4039	4871	6021	4235	3648	6424	6607	6585	10278	10571	10536
Chicago	4009	4783	5876	4260	3641	6453	6629	6603	10325	10606	10565
Denver	4028	4879	6039	4195	3651	6402	6587	6576	10243	10539	10522
Ft Worth	3020	3515	4090	2968	3085	5498	5470	5580	8797	8752	8928
Houston	2789	3146	3555	2788	2981	5339	5313	5432	8542	8501	8691
Knoxville	3389	4050	4833	3364	3323	5907	5963	6018	9451	9541	9629
Los Angeles	3346	3931	4608	3018	3254	5720	5726	5840	9152	9162	9344
Miami	2381	2465	2562	2548	2774	5180	5045	5180	8288	8072	8288
Minneapolis	4272	4962	6119	4650	3744	6669	6873	6827	10670	10997	10923
Newark	3746	4558	5563	3780	3523	6243	6361	6378	9989	10178	10205
Phoenix	2832	3243	3711	2654	2941	5209	5121	5305	8334	8194	8488
Pittsburgh	3940	4732	5802	4116	3615	6385	6559	6547	10216	10494	10475
Portland Or	3898	4970	6197	3596	3619	6248	6387	6434	9997	10219	10294
San Francisco	3730	4683	5778	3211	3466	5976	6020	6139	9562	9632	9822
Seattle	3977	5101	6378	3603	3675	6356	6492	6546	10170	10387	10474
Tampa	2587	2793	3030	2627	2867	5243	5139	5281	8389	8222	8450
Washington DC	3635	4394	5333	3675	3443	6089	6197	6219	9742	9915	9950
Westhampton NY	3906	4780	5891	3956	3571	6243	6416	6408	9989	10266	10253
Wilmington Del	3729	4541	5546	3767	3504	6191	6317	6332	9906	10107	10131

NOTES: ALL FIGURES BASED ON DAILY USAGE OF 64.3 GALLONS AT 140 F
GAS AND OIL WATER HEATERS ARE ASSUMED TO BE 50% EFFICIENT

Table 3

EFFECT OF LOCATION ON ANNUAL OPERATING COST ($) OF HPWH, ELECTRIC RESISTANCE, GAS-FIRED, AND OIL-FIRED WATER HEATERS

City	HPWH Located Inside House with HVAC Type				HPWH Loc in Uncond		Elec Res Water Heater In			Gas-Fired Water Heater In			Oil-Fired Water Heater In		
	Hi Eff HP	Res+A/C	60%Gas+A/C	60%Oil+A/C	Garage	Basement	Cond Sp	Garage	Basement	Cond Sp	Garage	Basement	Cond Sp	Garage	Basement
Albuquerque	283	342	269	300	285	272	481	487	490	150	151	152	279	283	285
Atlanta	166	197	171	195	163	166	295	297	301	145	146	147	271	273	276
Boston	340	409	337	354	356	307	540	555	554	258	266	265	319	328	327
Chicago	263	313	247	285	279	239	423	434	433	155	160	159	297	306	304
Denver	243	295	236	273	254	221	387	398	397	163	167	167	295	304	303
Ft Worth	188	219	187	207	185	192	342	341	347	136	135	138	256	254	257
Houston	164	185	166	179	164	176	314	313	320	138	137	140	246	245	250
Knoxville	141	169	147	177	140	138	246	248	250	130	131	133	275	277	280
Los Angeles	251	294	238	267	226	244	428	429	437	104	104	106	264	264	267
Miami	138	143	139	141	148	161	300	292	300	144	140	144	241	235	241
Minneapolis	262	304	241	281	285	229	409	421	418	160	165	164	307	317	315
Newark	328	399	326	345	331	308	547	557	558	233	237	238	310	316	317
Phoenix	184	211	184	199	173	191	339	333	345	130	127	132	240	236	245
Pittsburgh	255	306	239	282	266	234	413	424	424	142	146	145	304	313	312
Portland Or	153	194	187	213	141	142	244	250	252	210	214	216	295	302	304
San Francisco	206	259	201	247	178	192	331	333	340	114	115	118	275	278	283
Seattle	67	86	124	148	61	62	107	110	110	225	230	232	301	307	309
Tampa	171	184	170	178	173	189	346	339	349	130	128	131	244	239	246
Washington DC	199	240	210	233	201	188	333	339	340	196	199	200	290	295	296
Westhampton NY	408	500	390	412	413	373	652	670	670	233	239	239	310	319	318
Wilmington Del	307	374	296	325	310	289	510	520	521	182	185	186	295	301	302

NOTES: ALL FIGURES BASED ON DAILY USAGE OF 64.3 GALLONS AT 140 F
GAS AND OIL WATER HEATERS ARE ASSUMED TO BE 50% EFFICIENT

Table 4

Energy Costs (Jan,1982) Used in Preparation of Table 3

City	Fuel Oil $/Gal	Natural Gas $/100 Therms	Electricity $/1000 Kw-h
Albuquerque	1.18	45.57	80.05
Atlanta	1.18	45.42	50.56
Boston	1.26	73.67	84.06
Chicago	1.17	44.07	65.54
Denver	1.17	46.50	60.43
Ft Worth	1.18	45.27	62.25
Houston	1.17	47.30	58.90
Knoxville	1.18	40.34	41.62
Los Angeles	1.17	33.30	74.87
Miami	1.18	50.85	57.95
Minneapolis	1.17	44.05	61.26
Newark	1.26	68.24	87.56
Phoenix	1.17	45.57	65.11
Pittsburgh	1.21	40.64	64.70
Portland Or	1.20	61.46	39.13
San Francisco	1.17	35.08	55.35
Seattle	1.20	64.83	16.87
Tampa	1.18	45.57	66.01
Washington DC	1.21	58.89	54.64
Westhampton NY	1.26	68.24	104.50
Wilmington Del	1.21	53.77	82.35

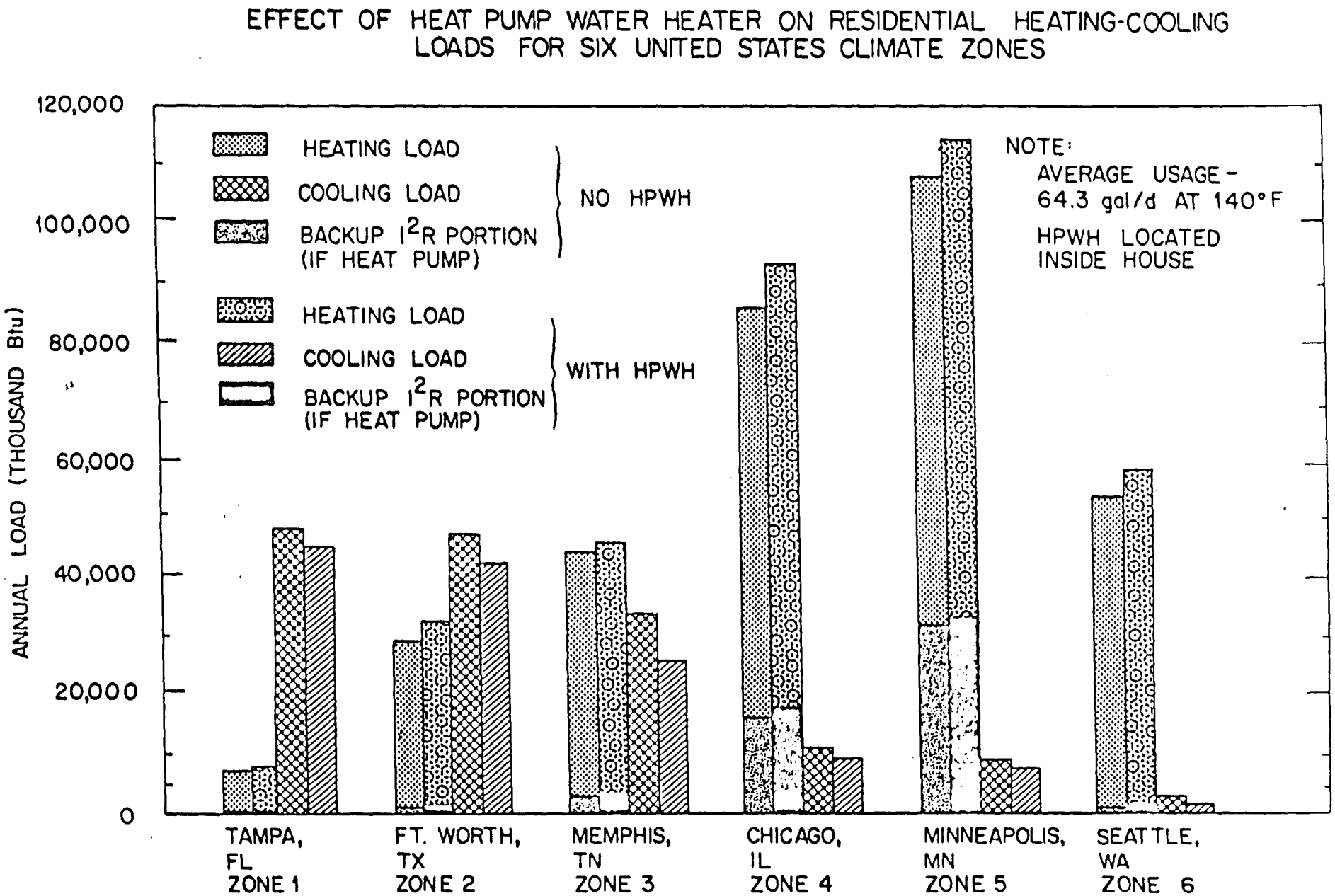
EFFECT OF HEAT PUMP WATER HEATER ON RESIDENTIAL HEATING-COOLING LOADS FOR SIX UNITED STATES CLIMATE ZONES
ANNUAL LOAD (THOUSAND Btu)
120,000
100,000
80,000
60,000
40,000
20,000
0
HEATING LOAD
COOLING LOAD
BACKUP I²R PORTION (IF HEAT PUMP)
NO HPWH
HEATING LOAD
COOLING LOAD
BACKUP I²R PORTION (IF HEAT PUMP)
WITH HPWH
NOTE:
AVERAGE USAGE - 64.3 gal/d AT 140°F
HPWH LOCATED INSIDE HOUSE
TAMPA, FL ZONE 1
FT. WORTH, TX ZONE 2
MEMPHIS, TN ZONE 3
CHICAGO, IL ZONE 4
MINNEAPOLIS, MN ZONE 5
SEATTLE, WA ZONE 6

Figure 11

REFERENCES

R. P. Blevins, "Demonstration of a Heat Pump Water Heater," Volume 2, ORNL/Sub-7321/4 (June 1981).

W. P. Levins, "Estimated Seasonal Performance of a Heat Pump Water Heater Including Effects of Climate and In-House Location," ORNL/CON-81, (January 1982).