ORNL/Sub/77-7381/3

ENERGY CONSERVATION

Development of a High-Efficiency Gas-Fired Water Heater

Phase II — Production Prototype Design and Development

Executive Summary and Task Reports

Andrew D. Vasilakis
Dr. Joseph Gerstmann

ADVANCED MECHANICAL TECHNOLOGY, INC.
141 California Street
Newton, Massachusetts 02158

Work performed for

OAK RIDGE NATIONAL LABORATORY
operated by
UNION CARBIDE CORPORATION
for the

U.S. DEPARTMENT OF ENERGY

OFFICE OF BUILDINGS ENERGY
RESEARCH AND DEVELOPMENT

Printed in the United States of America. Available from
National Technical Information Service
U.S. Department of Commerce
5285 Port Royal Road, Springfield, Virginia 22161
NTIS price codes—Printed Copy: A08 Microfiche A01

This report was prepared as an account of work sponsored by an agency of the United States Government. Neither the United States Government nor any agency thereof, nor any of their employees, makes any warranty, express or implied, or assumes any legal liability or responsibility for the accuracy, completeness, or usefulness of any information, apparatus, product, or process disclosed, or represents that its use would not infringe privately owned rights. Reference herein to any specific commercial product, process, or service by trade name, trademark, manufacturer, or otherwise, does not necessarily constitute or imply its endorsement, recommendation, or favoring by the United States Government or any agency thereof. The views and opinions of authors expressed herein do not necessarily state or reflect those of the United States Government or any agency thereof.

ORNL/Sub-7381/3
Dist. Category UC-95d

RESEARCH AND DEVELOPMENT OF A HIGH-EFFICIENCY GAS-FIRED WATER HEATER

PHASE II - PRODUCTION PROTOTYPE DESIGN AND DEVELOPMENT

EXECUTIVE SUMMARY AND TASK REPORTS

ANDREW D. VASILAKIS
DR. JOSEPH GERSTMANN

April 1983

Report Prepared by

ADVANCED MECHANICAL TECHNOLOGY, INC.
141 California Street
Newton, Massachusetts 02158

under

Subcontract 7381

for

Oak Ridge National Laboratory
Oak Ridge, Tennessee 37830

operated by
UNION CARBIDE CORPORATION

for the
U.S. DEPARTMENT OF ENERGY

under

Contract No. W-7405-eng-26

AMTI

FOREWORD

This report describes the work performed during Phase II on UCC-ND Subcontract 7381. In this contract Advanced Mechanical Technology, Inc. (AMTI) is a subcontractor to Union Carbide Corporation-Nuclear Division to research, develop, and demonstrate a high-efficiency gas-fired water heater. The water heater concept is a joint development of AMTI and AMTROL Inc., who is a subcontractor to AMTI under this UCC-ND project. AMTI is responsible for the design and development tasks while AMTROL is responsible for the manufacturing tasks.

This report consists of an executive summary which touches on the highlights of the project followed by the task reports that describe the work in greater detail.

ACKNOWLEDGEMENTS

The authors would like to thank Edward Vineyard and Virgil Haynes of Union Carbide Corporation for their assistance in planning and guiding this development program. For their continuing support of the project and their encouragement, we would like to thank Mr. Chester Kirk, Chairman of the Board at AMTROL and Mr. Kenneth Kirk, Chief Operating Officer. We also would like to thank Gunter Neumann, Assistant to the Vice Chairman of AMTROL, for his assistance, especially in the pricing of the water heaters and Al Heilmann Jr. for his aid in the construction of the water heater prototypes.

At AMTI, credits should be given to Cyril Randall for his design engineering work and Robert Johnson who supervised the laboratory work. For his work in conceiving and designing the Battery-Powered IID system, thanks are due Forest Carignan. Our thanks go to Nadine San Soucie for her patience and efforts in producing this report.

ABSTRACT

This report describes the second phase of the development of a high-efficiency, gas-fired water heater sponsored by the U.S. Department of Energy (DOE) and subcontracted by Oak Ridge National Laboratory.

The objective of the Phase II effort was to develop a production prototype based on the Phase I prototype design that met the project goal of a 70% service efficiency. The Phase II project began with a manufacturing analysis of the Phase I prototype by AMTROL, the manufacturing subcontractor. This was followed by an endurance test of a prototype built by AMTROL to the Phase I design. This test consisted of accelerated usage, including operation with both soft and hard water. The remainder of the Phase II project was devoted to improving the manufacturability, serviceability and performance of the high-efficiency water heater. A large part of the Phase II effort was spent in improving the efficiency from 62.6% to 71.4%.

During the Phase II portion of the project, two very significant achievements were attained. First, a premixed, natural draft, combustion system was developed that had a clean compact flame. Second, a battery-powered spark ignition system was developed with the potential for lasting the life of the water heater without battery replacement.

TABLE OF CONTENTS

	Page
FOREWORD	iii
ACKNOWLEDGEMENTS	v
ABSTRACT	vii
EXECUTIVE SUMMARY	1.0-1
TASK 2.1 REPORT - ENGINEERING PROTOTYPE MANUFACTURE AND TEST	2.1-1
TASK 2.2 REPORT - PRODUCTION PROTOTYPE DESIGN AND DEVELOPMENT	2.2-1

DEVELOPMENT OF A HIGH-EFFICIENCY GAS-FIRED WATER HEATER

EXECUTIVE SUMMARY

AMTI

TABLE OF CONTENTS

		PAGE
1.0	INTRODUCTION	1.0-1
2.0	ENGINEERING PROTOTYPE MANUFACTURE AND TEST	1.0-1
	2.1 Manufacturing Evaluation	1.0-3
	2.2 Performance Evaluation	1.0-3
	2.3 Endurance Testing	1.0-4
3.0	PRODUCTION PROTOTYPE DESIGN AND DEVELOPMENT	1.0-5
	3.1 Production Prototype Design	1.0-5
	3.2 Water Heater Efficiency	1.0-7
	3.3 Cost-Effectiveness Evaluation	1.0-9
4.0	REFERENCES	1.0-11

AMTI

EXECUTIVE SUMMARY

1.0 INTRODUCTION

The water heater development described in this report is a continuation of a previous Phase I development (Ref. 1) with the objective of developing a production prototype that met the project goals.

The Phase II project began with a manufacturing analysis of the Phase I prototype by AMTROL, the manufacturing subcontractor. This was followed by an endurance test of a prototype built by AMTROL to the Phase I design which was an accelerated usage test including operation with both soft and hard water. The latter was used to uncover any liming tendencies of the unit.

The remainder of the Phase II project was devoted to improving the manufacturability, serviceability and performance of the high-efficiency water heater. The manufacturing subcontractor requested improvements in the design of the heat exchanger, pilot and packaging of the system. The first preproduction prototype constructed in Phase II had a service efficiency of 62.6%; this fell below the efficiency obtained during the research and development phase (Phase I) and the project goal of 70%. The main emphasis of the Phase II effort was to improve the efficiency to 71.4%.

During the accomplishment of the Phase II portion of the project, two very significant achievements were attained. First, a premixed, natural draft, combustion system was developed that had a clean compact flame. Second, a battery-powered spark ignition system was developed with the potential for lasting the life of the water heater without battery replacement.

2.0 ENGINEERING PROTOTYPE MANUFACTURE AND TEST

This task began with the construction of two engineering prototypes by AMTROL similar to the Phase I (MK I) configuration shown in Figure 1.

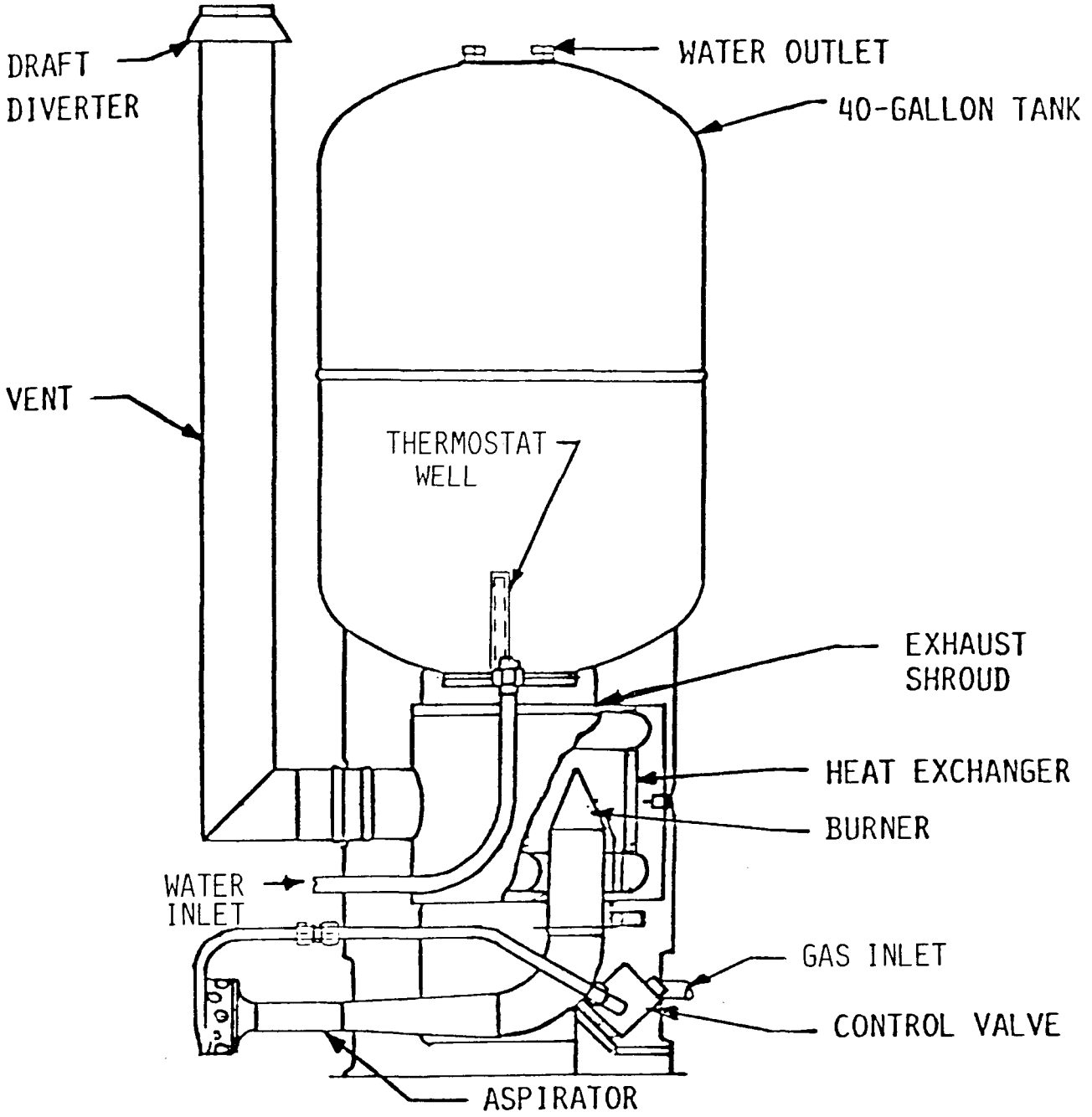

Figure 1. - MK I PROTOTYPE WATER HEATER

A performance and manufacturing evaluation was performed on these units, and one was endurance tested to provide additional design data for the Phase II design.

2.1 Manufacturing Evaluation

During the construction and assembly of the two prototypes by AMTROL, personnel from AMTROL and AMTI met several times to discuss the design, especially concerning the manufacturability, servicing, and cost of the prototype unit. AMTROL personnel felt the existing design must undergo design changes and cost reductions to become a marketable product.

Some of the more significant recommendations were:

- Use of stampings in the design of the heat exchanger headers and elimination brazed joints where possible.
- Smaller aspirator required to package the combustion system inside the skirt under the tank.
- Simplify pilot concept to improve serviceability.

The most serious complaint was that the combustion system protruded beyond the tank skirt, as can be seen in Figure 1.

2.2 Performance Evaluation

The performance evaluations of the two engineering prototypes included efficiency and combustion testing. Recovery efficiency tests on these units resulted in an average recovery efficiency of 79%, versus 82% for the Phase I prototype. This decrease in efficiency was traced to an increase in tube spacing. Based on these and earlier results, a tube spacing design criterion was developed which insured subsequent water heaters constructed in the prototype configuration met the project goal.

Standby losses for these prototypes were found to be 3.5% per hour as compared with 2.7% per hour for the Phase I prototype. This change was traced to differences in the manufacturing process used for the tank. Standby losses were targeted for major improvement in Task 2.2.

The other testing performed on these water heaters was combustion performance testing. The combustion tests consisted of performing some of the more important American Gas Association (AGA) tests on the water heater (Ref. 2). These included under- and over-firing the burner, flashback, and tests for proving reliable ignition. The combustion system easily passed the under- and over-fire tests, where CO emissions were at worst one-half the allowable limits and typically one-third. The burner did not exhibit any tendency to flash back, nor were any ignition problems encountered.

In addition to the conventional tests on the combustion system, emissions of oxides of nitrogen (NO_x) were also measured. At a burner input of 40,000 Btu/hr, these emissions were 16 ppm at 40% excess air and 6 ppm at 70% excess air. These results are one-third and one-fifth of the emission standards for water heaters set by the South Coast Air Quality Management District (SCAQMD) (Ref. 3).

2.3 Endurance Testing

In order to provide an early indication of long-term problems with the prototype water heater, an extensive endurance test was performed with one of the units constructed during this task. A facility which could simulate accelerated water usage (approximately one year's equivalent usage for each calendar month) was constructed to evaluate the water heater. In this facility, the water heater was operated for 2,949 hours which was the equivalent of 4.82 years of water heating service. About 60% of this was performed with a normal soft water supply having a hardness of less than 20 ppm $CaCO_3$, and the remainder was performed with water artificially hardened to a hardness of 200 ppm $CaCO_3$. The unit performed well and showed no appreciable degradation in performance due to extended operation. Internal flow passages remained clear and did not show evidence of scaling. The combustion system showed no long-term problems and the burner revealed no signs of overheating. Some potential corrosion problems were identified in some parts of the heat exchanger and ducting. These occurred on surfaces exposed to combustion products.

3.0 PRODUCTION PROTOTYPE DESIGN AND DEVELOPMENT

The objective of this part of the project was to improve the efficiency, manufacturability, and serviceability of the high-efficiency gas-fired water heater which was developed in an earlier phase.

The construction was improved by redesigning the heat exchanger for easier manufacturability and the combustion system for compactness. The standby losses for the water heater were decreased from 3.5%/hr to 1.55%/hr by increasing insulation thickness and using an intermittent ignition device (IID). This IID was entirely battery-operated and used a special gas valve developed for the project. The resulting water heater had a service efficiency of 71.4% compared with the project goal of 70%.

Finally, a cost-effectiveness evaluation was performed for the project water heater. Based on large production runs (approximately 100,000/year), consumer prices of $405 and $461 were estimated for the MK IV water heater with a gas pilot and battery IID, respectively. Using these prices, paybacks of 2.6 to 4 years were calculated for the water heater at an average national gas price of $5.00/MMBtu when compared to both conventional units and commercially available units meeting the ASHRAE 90A-1980 STANDARD (Ref. 4), respectively.

3.1 Production Prototype Design

The production prototype design (MK IV) is shown in Figure 2. The principal differences between the Phase I (MK I) prototype and final Phase II (MK IV) prototype are:

- Tank Redesign
  - -- Rotationally-molded inner liner with two inches of low density insulation applied externally.
  - -- Decrease of external fittings by 3 to improve reliability and decrease heat losses.
- Heat exchanger header redesigned for manufacturing ease

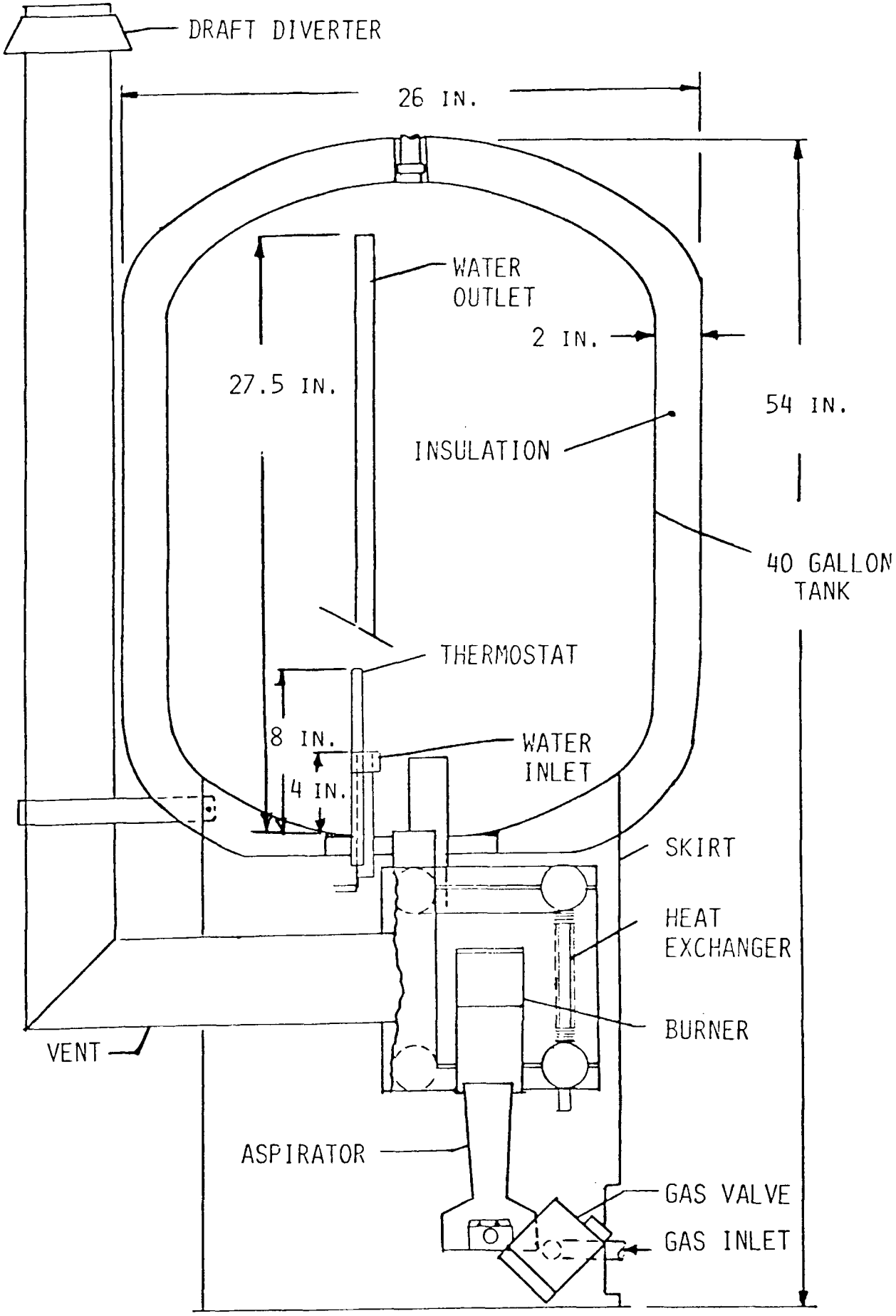

Figure 2. - MK IV PROTOTYPE

- Combustion System
  - -- Decrease in combustion system length from 31.5 to 9 inches.
  - -- Developed "stand-alone" battery-powered ignition system.

3.2 Water Heater Efficiency

The method used in this section to report water heater efficiency report is the service efficiency. This is identical to the DOE energy factor (Ref. 5) multiplied by 100 except it is calculated for a consumption of 75 gallons per day.* The service efficiency includes recovery efficiency and standby loss combined with water usage to provide a measure of overall energy effectiveness.

The recovery efficiency, standby loss, and service efficiency for the various water heater assemblies tested on this project are shown in Table 1. The recovery efficiency varied from 82% to 80.5%, with 80.9% the value considered the highest recovery consistent with minimizing corrosion from flue gas condensate. Standby losses ranged from 3.5%/hr for the MK II prototype down to 1.55%/hr for the MK IV.

The service efficiency at 75 gallons per day water consumption varied from 62.6% for the MK II prototype to 71.4% for the MK IV with the IID. The MK II was nearly identical to the Phase I (MK I) prototype except that it used a production tank. The main difference between the MK II and MK III prototypes was that the MK III storage tank had three less pipe fittings than the MK II. This resulted in lower standby losses. The greatest change was found in going from the MK III to the MK IV. The service efficiency with a gas pilot increased from 63.3% for the MK III to 68.3% for the MK IV, the main difference being the reduction in standby loss. The MK IV with the IID had a service efficiency of 71.4%. These results compare with 48.7% for a conventional water heater or 57.4% for a water heater meeting the ASHRAE 90A-1980 STANDARD (Ref. 4).

---

* 75 gpd was used for consistency in this project. The 64.3 gpd for the DOE test procedure had not been established when the project was started.

Table 1.

SERVICE EFFICIENCY COMPARISONS OF VARIOUS WATER HEATERS

Water Heater	Recovery Efficiency (%)	Standby Loss (%)	Service Efficiency Project 75 GPD (%)
1. MK I	82.	2.7	66.5
2. MK II	81.5	3.5	62.6
3. MK III	80.5	3.2	63.3
4. MK IV with Gas Pilot	80.9	2.15	68.3
5. MK IV with IID	80.9	1.55	71.4
6. Conventional	70.	6.	48.7
7. ASHRAE 90A-1980 STANDARD	75.	3.9	57.4
8. Project Goal	---	---	70.

3.3 Cost-Effectiveness Evaluation

Large quantity production cost estimates were made of the various water heater assemblies. Based on these estimates, the MK IV with a gas pilot would retail from $405, while the MK IV with the IID would cost $461. This compares with $200 for a conventional water heater, or $328 for one meeting the ASHRAE 90A-1980 STANDARD. These prices were used together with the efficiency results of Table 1 to calculate payback as a function of gas costs. The range of gas costs employed were $4.00/MMBtu to $8.00/MMBtu, with a national 1982 average of $5.00/MMBtu.

The results of the payback analysis are shown in Table 2. The payback of the project water heater is quite respectable with a range of 1.6 to 5.3 years. For a gas price of $5.00/MMBtu, the MK IV with a gas pilot has paybacks of 3.1 and 2.6 years when compared to the conventional and ASHRAE units, respectively. The MK IV with an IID has a payback of 4.0 years when compared with the conventional water heater and 3.7 years when compared to the ASHRAE unit. For comparison, the ASHRAE unit has a 4-year payback when compared to a conventional unit. The payback will be a little longer in the southwest, with gas costs of $4.00/MMBtu, and much less in the north where gas costs as high as $9.48/MMBtu (New York) exist.

Table 2.

PAYBACK COMPARISON OF DIFFERENT WATER HEATER MODELS

Water Heaters Compared		Price[2] Premium	Payback in Years		
High-Efficiency Unit	Base Unit		Gas Cost $4.00/MMBtu	Gas Cost $5.00/MMBtu	Gas Cost $8.00/MMBtu
MK IV (gas pilot)	Conventional	205	4.0	3.1	2.0
MK IV (gas pilot)	ASHRAE[1]	77	3.5	2.6	1.6
MK IV (IID)	Conventional	261	5.0	4.0	2.5
MK IV (IID)	ASHRAE[1]	133	4.7	3.7	2.3
ASHRAE[1]	Conventional	128	5.3	4.0	2.5

(1) Water Heater Meeting Minimum ASHRAE 90A-1980 STANDARD

(2) Based on High Volume Production Run

4.0 REFERENCES

1. A. D. Vasilakis, J. F. Pearson and J. Gerstmann, "Research and Development of a High-Efficiency Gas-Fired Water Heater, Volume 2: Task Reports," Prepared for Oak Ridge National Laboratory by Advanced Mechanical Technology, Inc., ORNL/Sub-7381/2, January 1980.

2. "American National Standard for Gas Water Heaters," Volume I, ANSI Z21.10.1-1981, American Gas Association.

3. South Coast Air Quality Management District, El Monte, CA 91731, Rules and Regulations, Rule 1121 Control of Nitrogen Oxides from Residential-Type Natural Gas-Fired Water Heaters, December 1, 1978.

4. ASHRAE Standard 90A-1980, "Energy Conservation in New Building Design," The American Society of Heating, Refrigerating, and Air-Conditioning Engineers, New York, NY, 1980.

5. "Energy Conservation Program for Appliances: Test Procedures for Water Heaters," Federal Register, October 19, 1978.

RESEARCH AND DEVELOPMENT OF A HIGH-EFFICIENCY GAS-FIRED WATER HEATER

Engineering Prototype Manufacture and Test

TASK 2.1 REPORT

AMTI

TABLE OF CONTENTS

		PAGE
1.0	INTRODUCTION AND SUMMARY	2.1-1
2.0	PROTOTYPE EVALUATION	2.1-3
	2.1 Prototype Construction	2.1-3
	2.2 Performance Evaluation	2.1-7
	2.2.1 Recovery Efficiency Testing	2.1-7
	2.2.2 Standby Loss Tests	2.1-12
	2.2.3 "Stacking" Tests	2.1-18
	2.2.4 AGA Combustion Performance Tests	2.1-19
	2.2.5 NO_X Emission Test Results	2.1-19
	2.3 Manufacturing Evaluation	2.1-20
	2.3.1 Heat Exchanger	2.1-20
	2.3.2 Combustion System	2.1-20
	2.3.3 Venting System	2.1-22
	2.3.4 Pilot and Ignition System	2.1-22
	2.3.5 General Construction and Layout	2.1-23
3.0	PROTOTYPE ENDURANCE TESTING	2.1-24
	3.1 Endurance Testing with Soft Water	2.1-24
	3.2 Endurance Testing with Hard Water	2.1-27
4.0	REFERENCES	2.1-40

AMTI

1.0 INTRODUCTION AND SUMMARY

This report describes the Phase II performance and manufacturing evaluation of the engineering prototype based on development work performed during Phase I. The work included the construction of two engineering prototypes, their performance evaluation by Advanced Mechanical Technology, Inc. (AMTI), and their manufacturability evaluation by AMTROL. At the end of this task, one of the units was installed in an endurance test facility and operated for the equivalent of 4.8 years of water heating service.

This task began with the construction of two engineering prototypes by AMTROL similar to the Phase I configuration. Performance tests on these units resulted in an average recovery efficiency of 79% versus 82% for the Phase I prototype. This decrease in efficiency was traced to an increase in tube spacing. Based on these and earlier results, a tube spacing design criterion was developed which would insure subsequent water heaters constructed in the prototype configuration would meet the project goal.

Standby losses for these prototypes were found to be 3.3% per hour as compared with 2.7% per hour for the Phase I prototype. This change was traced to differences in the formulation of the mixture used for the internal insulation.

The manufacturing evaluation resulted in several recommendations for decreasing the cost, improving the serviceability, and improving the component packaging of the water heater. Some of the more important ones were:

- Use stampings in the design of the heat exchanger headers and eliminate brazed joints where possible.
- Design smaller or multiple aspirators to package the combustion system inside the skirt under the tank.
- Eliminate or minimize screwed connections.
- Simplify pilot concept to improve serviceability.

In order to provide an early indication of long-term problems with the prototype water heater, an extensive endurance test was performed with one of the units constructed during this task. A facility which could simulate accelerated water usage (approximately one year's equivalent usage for each calendar month) was constructed to evaluate the water heater. In this facility, the water heater burner was operated for 2,949 hours which was the equivalent of 4.82 years of water heating service. About 60% of this was performed with a normal soft water supply having a hardness of less than 20 ppm $CaCO_3$, and the remainder was performed with artificially hard water having a hardness of 200 ppm $CaCO_3$. The unit performed well and showed no appreciable degradation in performance due to extended operation. Some potential corrosion problems were identified in some parts of the heat exchanger and ducting. These occurred on surfaces exposed to combustion products. Internal flow passages remained clear and did not show evidence of scaling. The combustion system showed no long-term problems and the burner revealed no signs of overheating.

The remainder of the Phase II work was aimed at improving the efficiency, manufacturability, and serviceability of the water heater (see the Tasks 2.2 portion of this report).

2.0 PROTOTYPE EVALUATION

One of the project goals was to provide a water heater acceptable to AMTROL, the manufacturing partner. While the manufacturer was familiar with the unit developed in Phase I (Ref. 1), he requested a task be included which allowed them to build two units. In this way, their personnel could become familiar on a "first-hand" basis with the construction and operation of the water heater. Two different evaluations were performed of the prototypes: a manufacturability evaluation by AMTROL, and a performance evaluation by AMTI.

2.1 Prototype Construction

For this task, the design of the prototype was similar to that existing at the end of Phase I. A brief description of the unit will be given here while a complete description can be found elsewhere (Ref. 1). Figure 1 shows a drawing of the high-efficiency prototype water heater. The heater consisted of four basic parts:

1. Natural Circulation Heat Exchanger
2. Internally-Lined and Insulated Tank
3. Combustion System and Controls
4. Venting System

The heater input was 40,000 Btu/hr firing with natural gas at approximately 40% excess air. A standing pilot was used which had an input of 275 Btu/hr. The unit did not use electric power, either for the premixed combustion system or for circulation of water through the heat exchanger. Water heater operation was similar to conventional units. Hot water was drawn through a fitting at the top of the tank. A second fitting at the top had a pressure/temperature relief valve installed. Cold water entered through a diffuser located at the bottom of the tank which minimized mixing with the hot stored water. The thermostat was positioned in the tank through a second fitting located at the bottom. The thermostat consisted of a liquid-filled bulb which operated a valve admitting gas to the burner when the tank temperature dropped below the set point temperature.

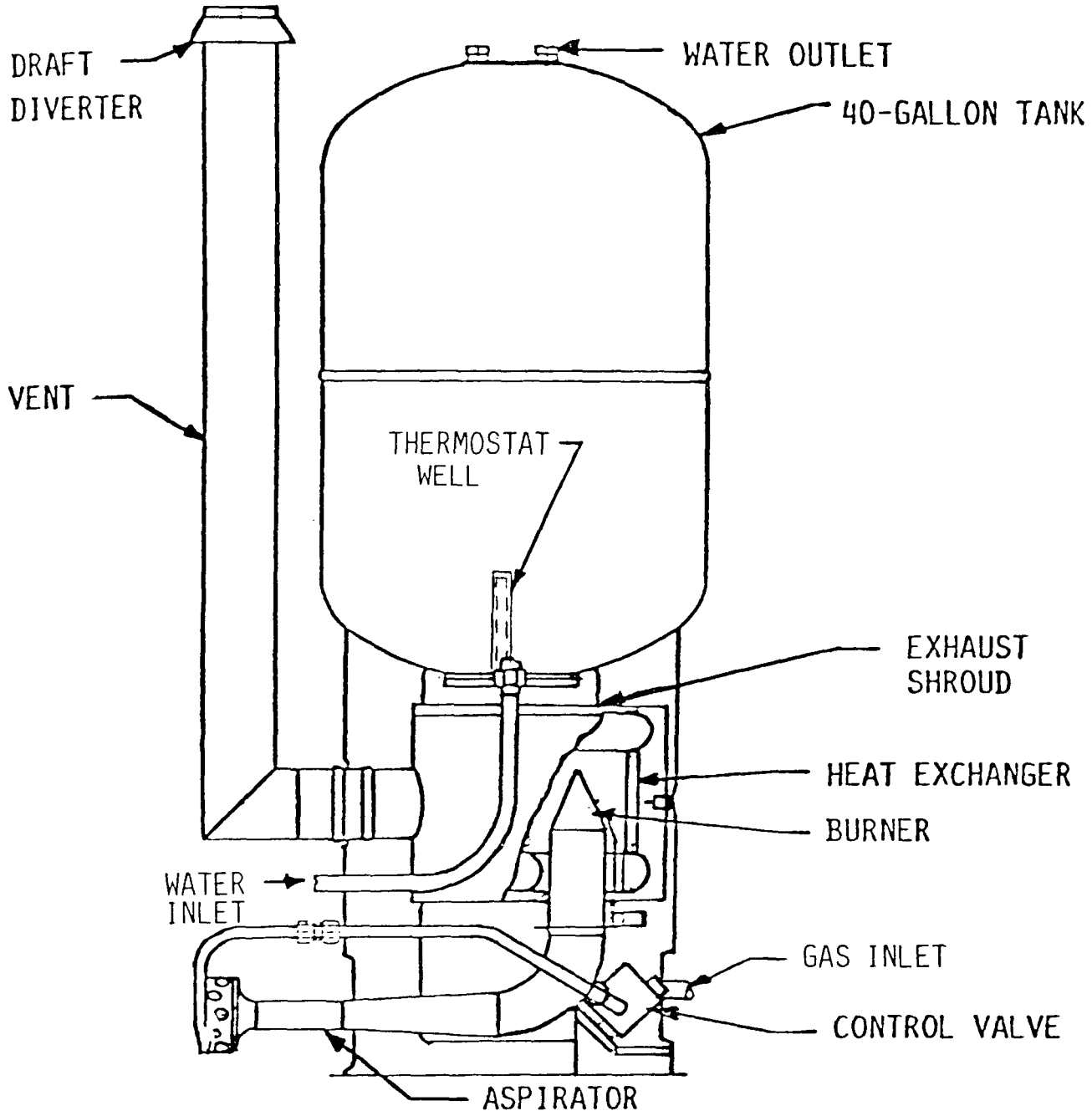

Figure 1. - MK I PROTOTYPE WATER HEATER

The combustion system is shown in Figure 2. Gas was admitted to an orifice directing a jet into the aspirator (mixer/diffuser) which, in turn, induced sufficient air for complete combustion. In fact, the aspirator could provide up to 80% excess air (40% was the design point), using only regulated gas as the motive force. The mixture of gas and air was ignited on the surface of a screen, which served as the flameholder.

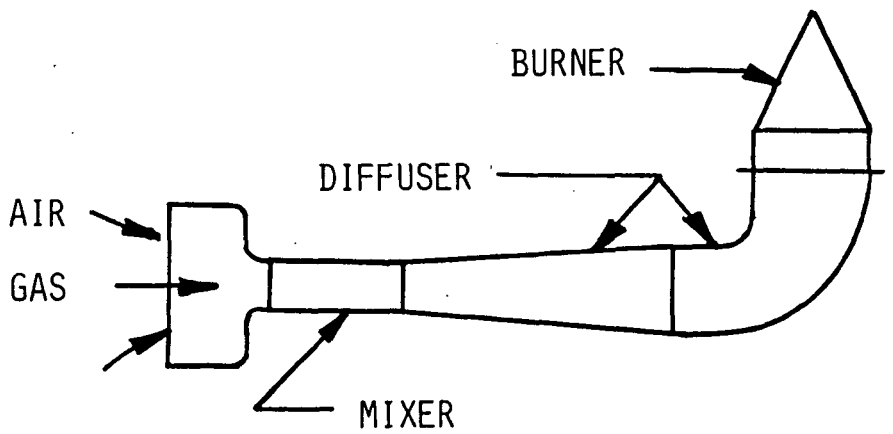

Figure 2. - ASPIRATOR/BURNER

The burner was mounted in the center of the heat exchanger shown in Figure 3. The heat exchanger consisted of 21 vertical, integral-finned, copper tubes connected at the top and bottom to toroidal headers. Hot combustion products flowed over the finned tubes, heating the water in the tubes. The density difference between this hot water and the cold water in the downcomer created a natural circulation flow of water through the heat exchanger, heating the water stored in the tank.

The tank design is a unique concept manufactured by AMTROL. The tank has a forty-gallon storage capacity bounded by a one-piece polyethylene liner which ensures that water does not come in contact with the steel tank. The liner is encapsulated with 0.75 inches of polyurethane insulation. A steel outer shell is the pressure bearing member of the assembly. One of the key design features of the tank is the absence of a center flue commonly found in conventional water heater designs.

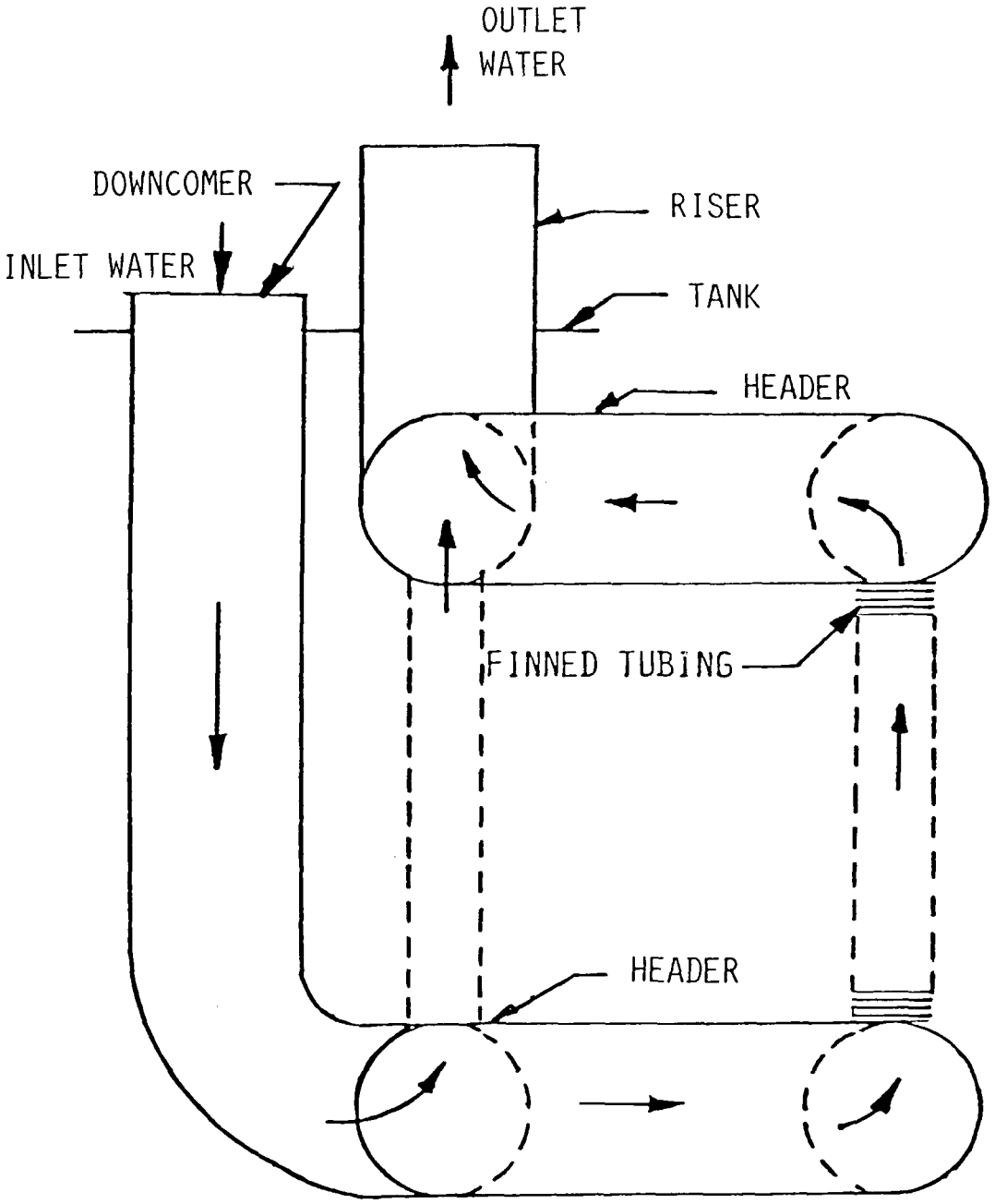

Figure 3. - PROTOTYPE HEAT EXCHANGER

In lieu of a center flue to vent combustion products, a vent exited from the back of a shroud surrounding the heat exchanger. A conventional draft diverter was used with the vent, as shown in Figure 1.

A set of drawings of the prototype were delivered to AMTROL and two water heater assemblies were constructed. The first prototype was assembled at AMTROL with the aid of AMTI personnel. It operated at 40,000 Btu/hr and had an exhaust temperature between 300-360°F. The exhaust temperature was greater than desired due to increased spacing (0.044 inches rather than 0.022 inches) between fin tips. The unit also exhibited higher start-up noise than the Phase I prototype. This was due to an inlet restriction in the aspirator created during the design phase to aid in packaging the unit. The air inlet passages were enlarged and this unacceptable start-up noise was eliminated. The second unit was constructed and made operational without any other problems being encountered. This second unit also had an exhaust temperature in excess of 350°F due to increased tube spacing. The tests at AMTROL consisted of measuring the exhaust temperature and firing rate. Extensive testing was accomplished at AMTI and is reported in the following section.

2.2 Performance Evaluation

The performance evaluation consisted of two tests as defined in the Department of Energy Test Procedures for Water Heaters (Ref. 2). The first is the recovery efficiency which measures the efficiency of the water heater in heating a stored volume of cold water through a 90°F temperature rise. The second is a standby loss test which measures the energy consumed by the water heater while keeping a stored volume of water at a specified temperature during off-cycle periods.

2.2.1 Recovery Efficiency Testing

Initial testing of the prototype constructed by AMTROL measured recovery efficiencies lower than expected, even accounting for the higher exhaust temperatures encountered with these units. After examining and eliminating the more common sources of error (thermocouple calibration, gas heating value, etc.), it was discovered that the tank volume changed as

a function of tank pressure. The tank volume measured 41 gallons with no pressure in the tank and 42 gallons when pressurized to 100 psig (line water pressure). Thus 2.5 percentage points of recovery efficiency were being lost due to the use of an erroneous tank volume. Initially, it was feared that the insulation was being damaged, causing the increase in volume. However, in subsequent discussions with AMTROL, it was found that the liner was not conforming to the preformed insulation until pressure was applied, eliminating voids between the liner and insulation.

Previously, utility gas had been used for recovery testing, and heating values were obtained from the local distribution center. In this phase, high purity methane gas was used during recovery tests to ensure the heating value was known. Both the temperature and pressure of the gas were monitored to make corrections to the gas flow. Thus, the energy input to the water heater was known more precisely.

Table 1 lists the results from five recovery tests performed on the prototype water heater manufactured by AMTROL. The average recovery efficiency for this unit was 78.8% at an average firing rate slightly greater than 40,000 Btu/hr. Excess air levels were about 5 percentage points higher than desired. The exhaust temperature was approximately 60-90°F higher than the design goal (300°F). As previously mentioned, the higher than anticipated exhaust temperature was due to increased fin tip spacing.

Since several units had been constructed during Phase I and Phase II having different spacing, it was decided that the effect of tube spacing on performance could be obtained using this data. Table 2 shows the combustion efficiency for three separate heat exchangers having different spacing between fin tips. For spacing from .015 to .044 inches, the combustion efficiency varied from 80 to 86%. The heat exchanger configurations listed in Table 2, while constructed at different times, were geometrically similar, and aside from minor details, fin tip spacing was the only performance related variable which differed among them.

Combustion rather than recovery efficiency was used to correlate the tube spacing data because combustion efficiency data was available for

Table 1. PROTOTYPE (AMTROL MANUFACTURED) RECOVERY EFFICIENCY(1)

Gas Type	Firing Rate (Btu/hr)	Excess Air(2) (%)	Exhaust Temp(2) (°F)	Initial Tank Temperature (°F)	Final Tank Temperature (°F)	Recovery Efficiency (%)
Methane	40,700	37-47	309-366	68.	160.	78.9
Methane	40,800	42-52	304-359	70.	157.	79.2
Methane	43,600	37-43	365-409	68.	157.	78.5
Methane	43,600	37-45	363-409	70.	155.	78.6
Methane	40,000	40-47	337-390	70.	157.	78.7
					Average	78.8

(1) Based on 90°F temperature rise

(2) Range encountered during test

Table 2. HEAT EXCHANGER TEST RESULTS

Configuration	Fin Tip Spacing (in.)	Firing Rate (Btu/hr)	Excess Air (%)	Water Temperature		Exhaust Temp (°F)	Combustion Efficiency (%)
				Inlet (°F)	Outlet (°F)		
"Proof-of-Concept"*	.024	45,300	40	75	104	260	85
	.024	45,300	40	133	151	293	85
Phase I Prototype*	.015	48,000	48	68	104	222	86
	.015	48,000	48	100	129	241	86
	.015	48,000	48	139	170	256	85
AMTROL Manufactured Phase I Prototype	.044	42,300	55	76	101	348	82
	.044	42,300	55	100	126	384	81
	.044	42,300	55	152	175	417	80

* Described in Reference 1

three of the heat exchangers while recovery efficiency data was only available for two. The combustion efficiency of the water heater is about 1.5 points higher than the recovery efficiency because the latter accounts for jacket losses. Thus, a combustion efficiency of 83% is required to attain the project goal of an 81.5% recovery efficiency.

The data from the units shown in Table 2 was correlated to obtain the effect of spacing on combustion efficiency as a function of excess air. The results of this correlation are shown in Figure 4 for the design firing rate of 40,000 Btu/hr and an average water temperature of 105°F, which are representative of average test conditions.

Based on this analysis, a design point spacing of .024 inches correlated with a combustion efficiency of 83%, which was the design goal. From discussions with AMTROL, it was decided that a tolerance of ±.005 inches could be maintained. As can be seen in Figure 4, this results in a ±1% effect on combustion efficiency, and would have a similar effect on recovery efficiency.

2.2.2 Standby Loss Tests

Three standby loss tests were run with the AMTROL manufactured prototype unit, and the test results are shown in Table 3. The average standby loss for these tests was 3.3%/hr. Two of these tests were performed using methane and one using utility natural gas. A comparison with tests performed on the Phase I engineering prototype showed a 22% increase in standby loss from 2.7 to 3.3%/hr. Part of this difference can be attributed to the lower recovery efficiency of 79% compared with 82% measured with the Phase I prototype. However, this has an effect of less than 0.1%/hr. The major change in standby loss is attributed to changes in the manufacturing process and materials. The Phase I tank was not a production model, and was constructed using different fabrication techniques. The tank used for the standby loss tests reported in Table 3 was one made in AMTROL's production facility for their internally-lined and insulated tank line (Boiler Mate).

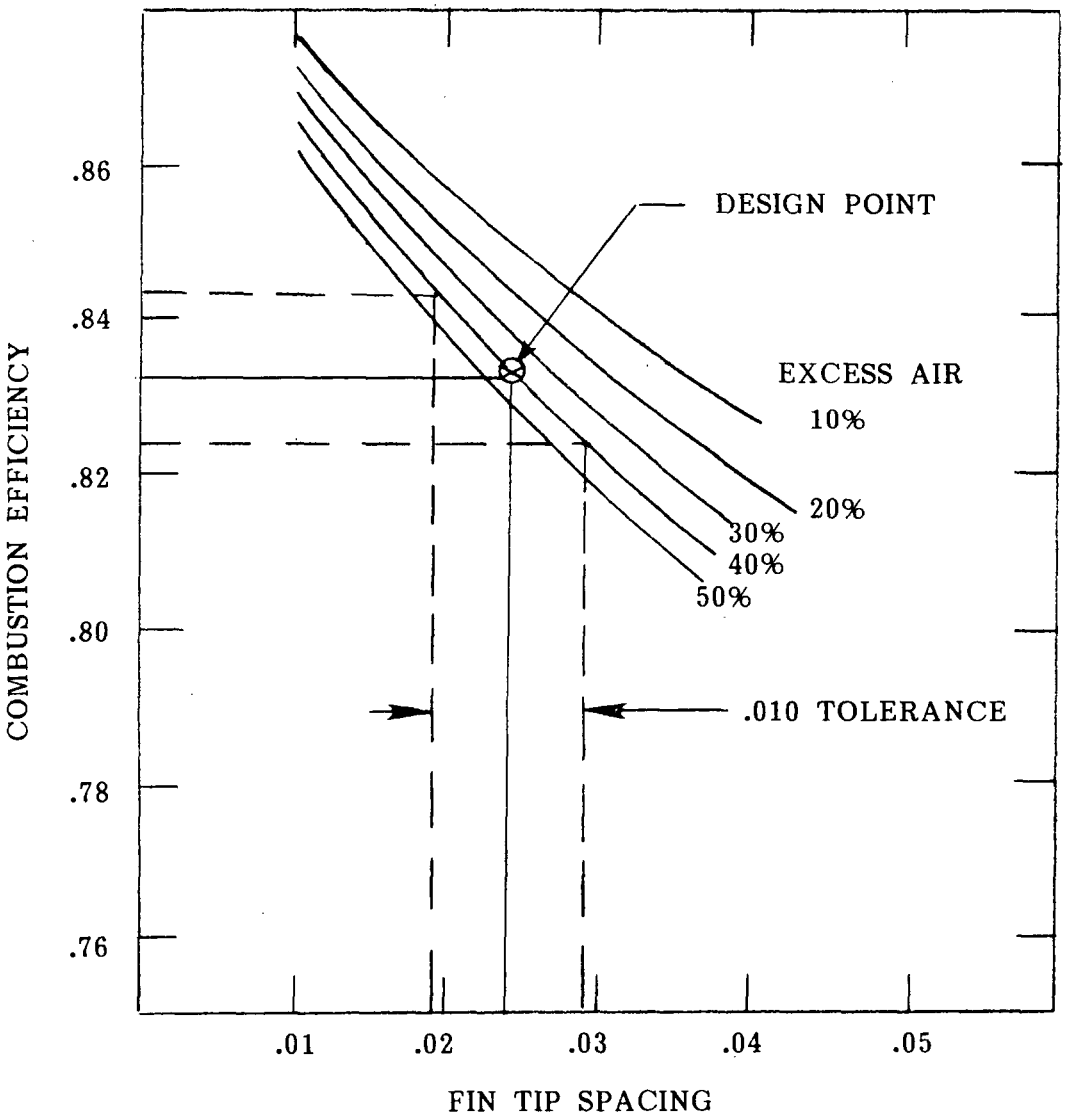

Figure 4. - EFFECT OF TUBE SPACING ON EFFICIENCY

Table 3. STANDBY LOSS TESTS

Gas Type	Nominal Firing Rate (Btu/hr)	Average Air Temp (°F)	Average Water Temp(1) (°F)	Stored Water Temp Range(1) (°F)	Standby Loss (%/hr)
Methane	40,000	74	150	144-158	3.24
Methane	40,000	73	151	142-158	3.36
Utility	40,000	78	149	143-155	3.35

(1) Average of six temperatures measured at six equal volume positions

While not as low as expected, this standby loss is well below the 6%/hr found with conventional water heaters (Ref. 7), and still below the 3.9%/hr ASHRAE 90A-1980 Standard for Gas-fired Water Heaters (Ref. 3).

2.2.3 "Stacking" Tests

Draw and capacity tests were not performed with the prototype in this task. The design of the unit had not changed significantly with regard to firing rate, storage capacity, recovery rate, so it was felt that the results measured in Phase I would also hold for this unit (Ref. 1). However, one test which was not performed in Phase I was the "stacking" tendency of the water heater.

The phenomenon of thermal "stacking" occurs when, during cycling in any storage-type water heater, a very large temperature difference builds up between the water at the bottom of the storage tank, where the thermostat is located, and the water at the top of the tank. Since cold water is added directly into the bottom of the tank, it is possible to build up high water temperatures at the top by frequent thermostat operation activated by a series of short draws as would occur with sink or washbasin use. Such a mechanism could "ratchet" the water temperature at the top higher and higher with each subsequent cycle. This could result in the temperature and pressure relief valve operating or, worse, the presence of scalding hot water at the faucet.

In order to investigate the possibility of this occurrence in the water heater, cycling tests were performed at various draw rates. Flow rates of .5, 1.7, and 4.7 GPM were tested. Figure 5 shows the general draw pattern used for each test. Water was drawn until initiation of burner operation. The draw was then stopped and the unit allowed to recover to thermostat shut-off. After the tank was allowed to stabilize, a set of temperature readings were taken from the six tank thermocouples. Water draw was then restarted and the cycle repeated. Five such cycles were used for each test. In performing these tests it was noted that the tank thermostat, mounted at the bottom of the unit, had a slow response time. Thus at higher flow rates, a greater volume of draw was required to initiate burner operation than at lower draw rates. Figure 6 demonstrates this effect. In this plot, the tank volume drawn before thermostat operation initiates is plotted versus draw flow rate. As can be seen from the figure, at a flow of .5 GPM a draw of 1.6 gallons was required for thermostat operation while at 4.7 GPM a draw of 4 gallons was required. The results of the "stacking" tests are shown in Table 4. It can be seen that, in all three tests, no significant change in water temperature at the top of the tank occurred as a result of cycling. In this table, the temperature of the water at the top is shown at the end of five successive recovery cycles. The degree of "stacking" (differences in water temperature at the top from initial value to value at the end of 5 cycles) varied from about minus 1°F to 2°F. Thus, the water heater shows no evidence of "ratcheting" of water temperatures due to "stacking".

Table 4. SUMMARY OF RESULTS OF "STACKING" TESTS

Draw Rate (gpm)	Water Temperature at Top of Tank (°F)						Degree of Stacking (°F)
		Cycle					
	Initial	1st	2nd	3rd	4th	5th	
0.5	163.1	164.2	164.4	164.4	165.0	164.9	1.8
1.6	164.3	164.4	164.4	164.2	164.3	164.3	0
4.7	164.2	163.5	163.2	163.1	163.4	163.1	-1.1

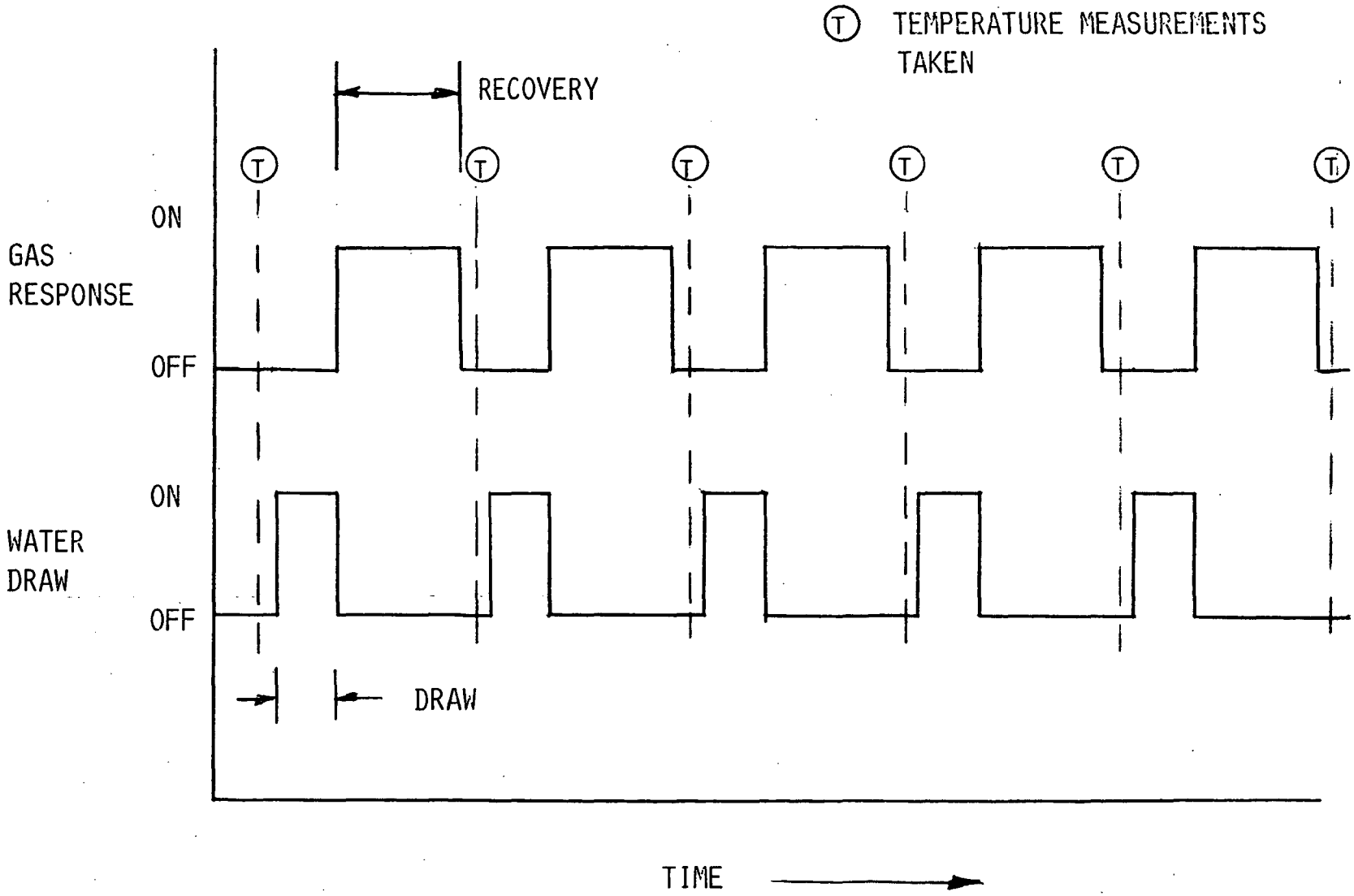

Figure 5. - DRAW PATTERN FOR "STACKING" TESTS

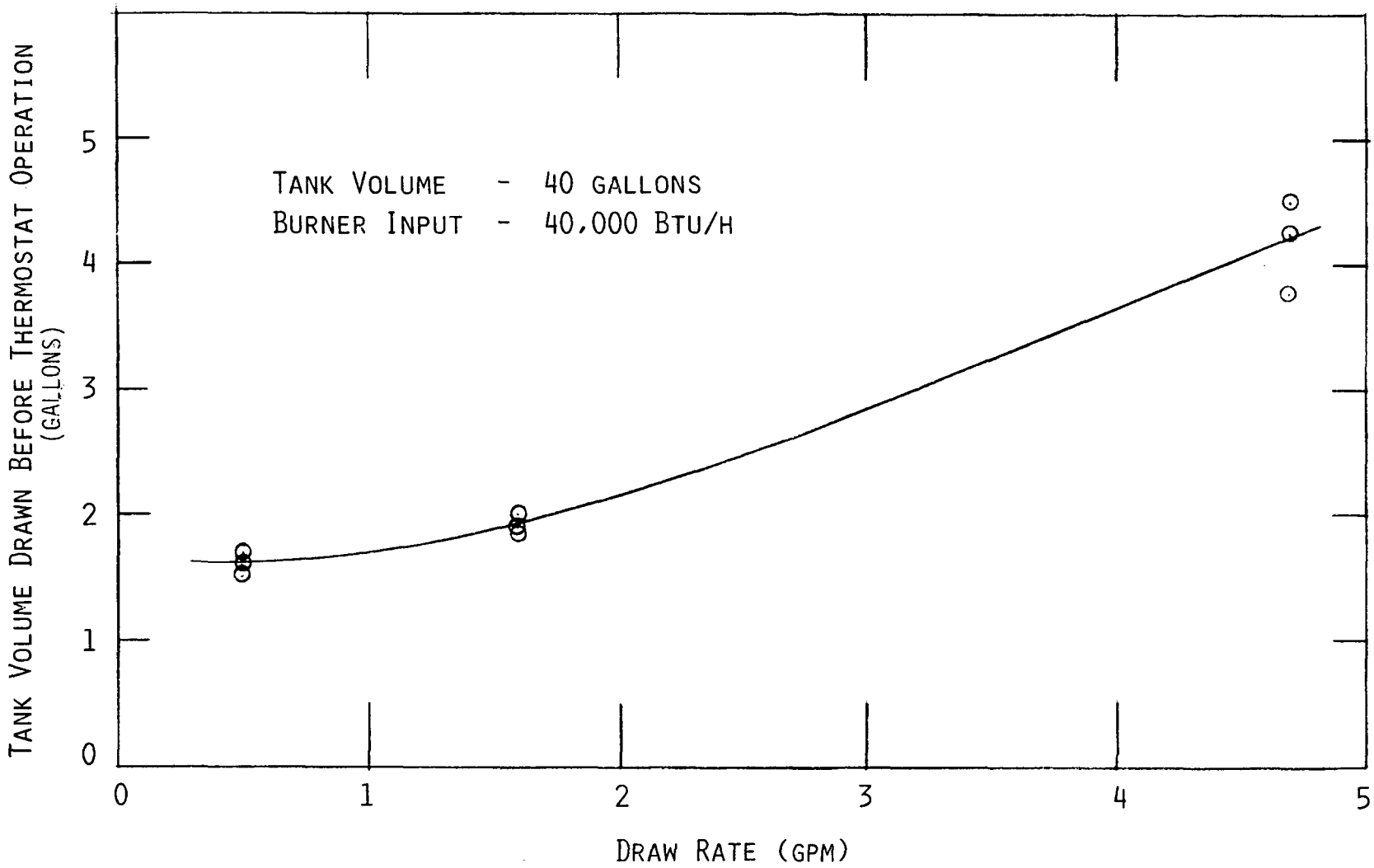

Figure 6. - DRAW REQUIRED TO INITIATE BURNER OPERATION AS A FUNCTION OF WATER DRAW RATE

The elimination of "stacking" in this water heater can be explained by taking a brief look at the operation of the heat exchanger. Figure 3 shows a general view of the prototype heat exchanger. During operation, cold water entering at the bottom of the tank initiates thermostat operation causing the burner to activate. By means of natural circulation, water at the bottom of the tank is drawn into the downcomer and discharged through the riser approximately 20°F to 30°F higher than its entering temperature. Once the thermostat cut-off temperature is satisfied, burner operation ceases. Because there is very little mixing of water in the tank, only the water in the bottom portion of the tank is heated. This contrasts with conventional center-flue water heaters where heating occurs along the entire length of the flue, thus, introducing the possibility for overheating the water in the top portion of the tank.

2.2.4 Combustion Performance Tests

The American Gas Association (AGA) requires that water heaters pass a series of combustion tests prior to being allowed to be sold commercially (Ref. 4). While this series of tests is fairly comprehensive and was beyond the scope of this project, some of the more important or critical combustion tests were performed on the AMTROL manufactured prototype. These consisted of measuring emissions while the unit was operated in the normal and off-design mode. The tests were conducted with both natural gas and a butane-air mixture. Some tests were designed to measure the combustion characteristics of the water heater and other ignition properties of the burner.

The combustion tests consisted of running the water heater at a normal gas line pressure, a higher than expected gas line pressure, and a low gas line pressure. During the high pressure condition, the water heater burner must emit less than .04% (400 ppm) carbon monoxide and less than .02% (200 ppm) while operating at the low pressure condition. This must occur when using both tests gases. The test results for both the natural gas and butane-air tests are shown in Table 5. In the natural gas tests, the high pressure case resulted in carbon monoxide levels that were 20% of the maximum limit imposed by AGA when these were corrected for excess air. In the low pressure tests, the carbon monoxide emissions were less than 40% of the standards. In the tests with butane-air, the emissions were 30% and 20% of the limits for the high and low gas pressure cases, respectively.

Table 5. COMBUSTION TESTS

Test Condition	Carbon Monoxide		AGA Limit (Air-Free) (ppm)
	Measured (ppm)	Air-Free (ppm)	
	A. Natural Gas		
Normal Pressure	42-50	60-72	---
High Pressure	52-55	74-78	400
Low Pressure	49-51	72-74	200
	B. Butane-Air		
Normal Pressure	52-71	68-93	---
High Pressure	65-93	85-122	400
Low Pressure	22-30	29-40	200

The carbon monoxide emissions with the butane-air mixture were slightly higher than those with natural gas, probably due to the unit operating a little richer with the butane-air mixture. For these tests, burner readjustment was not allowed. Thus, the unit was adjusted for operation with its normal fuel (natural gas) and then the test gas was admitted to the burner without any air shutter adjustments. It was found that the water heater ran slightly richer with butane-air (30 to 35% excess air) when compared to natural gas (35 to 45% excess air).

The tests performed to demonstrate the ignition characteristics of the pilot consisted of operating the combustion system at varied gas pressures and measuring the time required for ignition to occur. In one test, the AGA code required the burner to light using a normal pilot pressure without flashback occurring. In another test, the gas pressure to the pilot was decreased until the pilot flame was just sufficient to keep the safety shut-off valve open and the time required for ignition was

measured at various gas pressures. The pilot was required to effect ignition within four (4) seconds. All of these ignition tests were run with the butane-air mixture.

The test results using a normal pilot pressure (3.5 inches of water) showed that the pilot lit the burner at all of the test pressures without flashback or any other problems. Ignition times were from .7 to 1.1 seconds. These tests were conducted with both a cold and hot combustion system. The results from the second set of ignition tests are shown in Table 6. In the tests with the reduced pilot pressure (1 inch of water), the time required for ignition varied from .7 to 1.5 seconds. This was well below the 4-second limit specified by the code. However, flashback did occasionally occur during tests with the reduced pilot pressure at a test gas pressure of 9 inches of water. This did not occur consistently and its cause was not found. Since both the burner and pilot configuration were being changed in the production design (Task 2.2), it was decided not to investigate this phenomenon further with the prototype combustion system since the unit had passed the bulk of the combustion and ignition tests.

Table 6. BUTANE-AIR IGNITION TESTS WITH REDUCED PILOT

Test Condition	Elapsed Time Before Ignition		Reduced Pilot Pressure (inches of water)
	Measured (sec)	AGA Maximum (sec)	
Normal Pressure	0.7	4	1
High Pressure	0.8	4	1
Low Pressure	1.5	4	1

2.2.5 NO_x Emission Test Results

The oxide of nitrogen emissions from the prototype burner were measured in Phase I of this project (Ref. 1) with an instrument which used the color change in an indicating compound to measure the quantity of both NO and NO_2. Using calibration gases, it was found that this method might have an error of 10 ppm in interpreting the occurrence of the color change.

During this task, a chemiluminescent analyzer was obtained and used to again measure the oxide of nitrogen emissions from the combustion system. At a burner input of 40,000 Btu/hr, these emissions were 16 ppm at 40% excess air and 6 ppm at 70% excess air. These results are one-third and one-fifth of the emission standards for water heaters set by the (California) South Coast Air Quality Management District (SCAQMD) (Ref. 5). The new results are shown plotted in Figure 7 together with the results obtained in Phase I. As is evident from the figure, the emissions measured with the more accurate chemiluminescent analyzer confirm the earlier results and show that water heater NO_x emissions are well below the proposed standards.

2.3 Manufacturing Evaluation

During the construction and assembly of the prototype by AMTROL, personnel from AMTROL and AMTI met several times to discuss the design, especially concerning the manufacturability, servicing, and cost of the prototype unit. AMTROL personnel felt the existing design must undergo design changes and cost reduction to become a marketable product. The following discussion reflects the comments made by AMTROL personnel on a component basis.

2.3.1 Heat Exchanger

The existing toroidal headers were too costly for AMTROL to manufacture as configured. Alternate designs were requested which would minimize brazed joints, especially the use of silver solder. The use of AMTROL manufacturing techniques, for example, the use of headering with rolled or welded joints, were suggested. A desirable design concept would be one that fits entirely inside the tank to minimize heat exchanger height and thus utilize the stand from AMTROL's Boiler Mate product line.

2.3.2 Combustion System

The original aspirator was too long to fit within the 19-inch skirt and it was felt that the aspirator should extend no more than 2 inches outside the skirt so that any protruding part could be concealed by a sheet

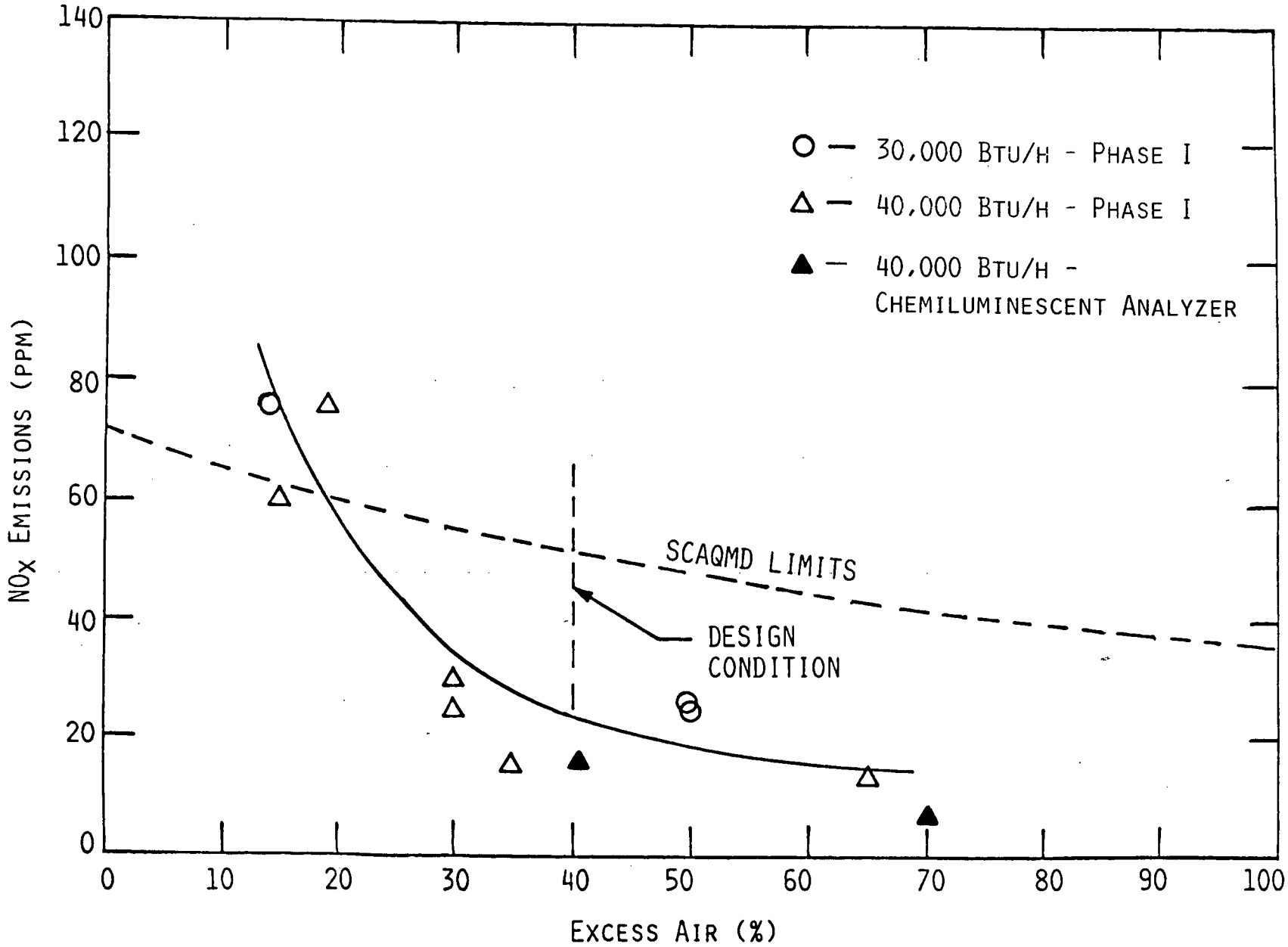

Figure 7.-WATER HEATER NO_x EMISSIONS USING BOTH CHEMILUMINESCENT ANALYZER AND MATHESON GAS ANALYSIS

metal cover. The preferred configuration was that there was no protrusion outside the skirt. The current location of the aspirator inlet and gas orifice was unacceptable because it was considered inaccessible for servicing and would result in a marketing liability even if allowed by AGA (Ref. 4). AMTROL felt that all gas orifices must be accessible from the front of the unit. The aspirator should be designed so that it could be formed from sheet metal, preferably from tube stampings. If a multiple aspirator design was required to make the unit fit under the skirt, this would be acceptable as long as each gas orifice is accessible from the front of the water heater. The burner assembly should be easily removed with a minimum of nuts and bolts. Preferably, the burner should be tab-located and sealed with a pressure fit applied with a single screw. The present cone-shaped flameholder should be replaced with a less expensive design. One suggestion was a cylindrical shape. The suggestion that a ceramic infrared flameholder be investigated was also made.

2.3.3 Venting System

AMTROL felt that the exhaust system must exit from the rear of the unit. It was felt that a stack and draft diverter would not be supplied with the unit. Subsequent investigation showed that this would not be allowed under the AGA code (Ref. 4). The direct (sealed combustion) vent option should be preserved, possibly increasing the air inlet ducting size to allow operation at higher firing rates. A combustion chamber integral to the stand should be considered.

2.3.4 Pilot and Ignition System

Due to the existing climate of mandatory electric ignition legislation, the unit must be designed with electric ignition in mind. It was not clear to AMTROL whether even efficient standing pilots will be allowed in the future. The pilot and ignition system components must be easily removed and serviced from the front of the unit. It was felt that the prototype with the integrated pilot/burner design did not fit this requirement. The piezo-electric ignition system was considered too costly.

2.3.5 General Construction and Layout

Height of underneath components must be minimized, preferably to allow use of Boiler Mate stand. The unit must be designed so that service of field-replaceable components is simplified with a minimum of nuts, bolts and screws. Wherever possible, components should tab-locate and snap into place. Wherever possible, gas piping should be of aluminum tubing. AMTROL considered serviceability a critical factor, not only in attracting sales but also in satisfying the subjective judgements of regulating agencies.

3.0 PROTOTYPE ENDURANCE TESTING

In order to uncover potential long-term problems, one of the AMTROL manufactured prototypes was installed in an endurance test facility which subjected the unit to an accelerated usage pattern. The water heater was placed on a draw cycle which resulted in one year's equivalent usage (at a rate of 64.3 gallons per day) for each calendar month. Two test conditions were used. Initial testing was done with the available Newton, MA, city water which was soft and did not exhibit liming tendencies. The final testing was performed with water that was artificially hardened by adding calcium chloride to the city water supply.

3.1 Endurance Testing with Soft Water

The endurance test facility is shown in Figure 8. The draw from the water heater was regulated using a combination of timers and a solenoid valve. A 24-hour timer was set to cycle a 30-minute timer every half hour. The 30-minute timer was set to operate a solenoid "dump" valve for 3.4 minutes each time it was actuated. The water outlet pipe was equipped with a pressure-compensated flow control set for 4.7 gallons per minute. Thus during each half-hour cycle, 16 gallons were drawn in 3.4 minutes and the remainder of the half hour was spent in heating the water to the cut-off temperature. This cycle is shown in the lower left of Figure 8. The chosen draw rate resulted in the heating of 768 gallons per day. At the national average daily consumption of 64.3 gallons per day (Ref. 2), the endurance facility simulated one year's accelerated usage in 30.6 days. Water consumption was measured using a positive displacement-type cumulative flow meter.

Combustion system variables, such as burner starts, burner operating time, and flameholder temperature were measured using a thermocouple mounted on the flameholder. The output from the thermocouple was monitored by a temperature control which operated an elapsed time meter whenever the flameholder temperature exceeded 200°F, thus obtaining burner operating time. At the same time, a cycle counter was incremented to monitor burner on/off cycles. A safety monitor was also included which shut off the gas supply to the water heater if the flameholder temperature exceeded 500°F.

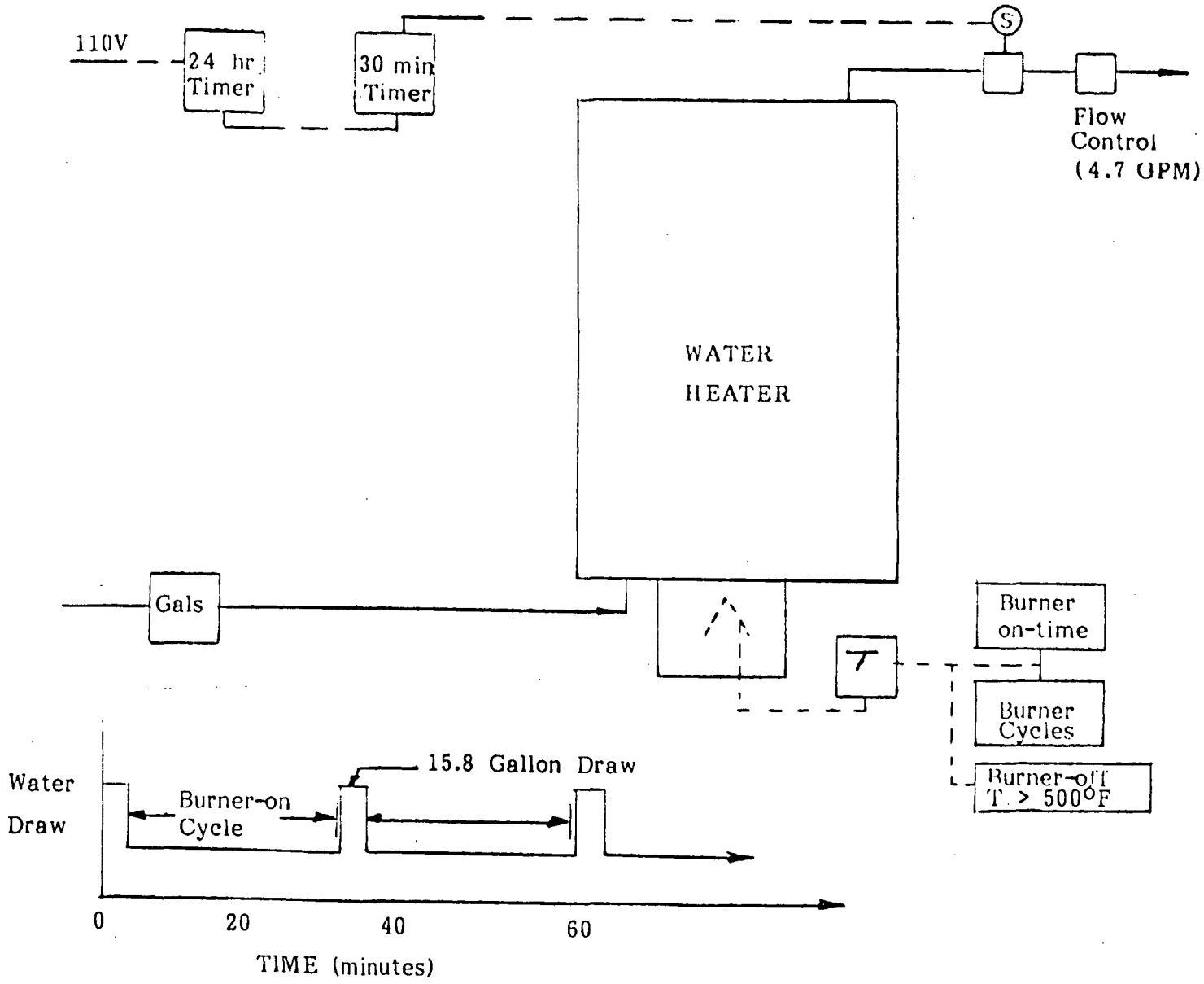

Figure 8. - ENDURANCE TEST FACILITY

During the endurance testing with soft water, the water heater burner operated for 1,801 hours heating 68,060 gallons of water. This was the equivalent of 2.9 years of water heater service. There were no major problems or failures with the unit during this period. A leak at one of the tank fittings was the only problem which occurred. The unit ran unattended with no maintenance and the only time it was stopped was to perform recovery efficiency tests. The recovery efficiency as a function of time is shown in Table 7. From the results presented in the table, it can be seen that while the recovery efficiency varied, there appeared to be no historical trend of performance degradation with operating time. The efficiency varied from 79 to 83% and this was probably due to the variability in utility gas heating value and instrument accuracy. The stack temperatures shown in Table 7 are relatively constant versus time indicating no degradation in performance due to deposits on heat exchanger surfaces.

Table 7. RECOVERY EFFICIENCY DURING ENDURANCE TESTING WITH SOFT WATER

RECOVERY EFFICIENCY (Utility Natural Gas)				
Hours of Burner Operation	Recovery Efficiency (%)	Excess Air (%)	Stack Temperature (°F)	Equivalent Usage (years)
0	83.6	40-45	323/371	0
324	79.0	40-50	320/366	0.52
396	82.9	40-45	320/377	0.64
832	79.3	38-42	309/361	1.34
854	79.3	34-40	314/369	1.38
1576	80.7	34-40	330/380	2.54
1800	80.2	50-60	300/360	2.90

Figure 9 is a photograph of the heat exchanger as it appeared when it was removed from its housing before it had been cleaned. The photograph shows copper sulphate and copper carbonate deposits on the lower header and brazed joints. Some of the heavier deposits seen on the lower header are pieces of insulation that stuck to the unit when it was disassembled. A close-up of the lower header is shown in Figure 10 before and after cleaning. It had been feared that the braze material corroded but this was not evident after the joints had been cleaned. While the lower header showed pitting, the unit had not failed and was used in further endurance tests. One observation made was that the chosen endurance cycle drained and filled the unit quite frequently, resulting in extensive condensation, and this duty cycle might not be representative of actual water heater operation found in the home. The actual heat exchanger surface (finned tubes) did not contain any heavy deposits and only had a slight discoloration as shown in Figure 11. This supports the data of Table 7 which showed the recovery efficiency remaining relatively constant over the test period. The inside surfaces of the heat exchanger showed no evidence of liming and appeared relatively clean. The water during these tests was soft, typically having less than 20 ppm hardness expressed as $CaCO_3$.

There was very little to report concerning the combustion system. The burner and pilot operated without trouble and the parts did not show any evidence of potential failure modes. The burner at the end of 1,800 hours of operation is shown in Figure 12; no evidence of overheating or corrosion were found.

3.2 Endurance Testing with Hard Water

While the water heater did not show any liming tendencies with normal Newton, MA, city water, it was desired to test the unit with hard water to uncover any potential liming tendency of the water heater. The major areas of concern were the flow passages formed by the finned tubing which connected the headers. Classification of water softness or hardness is shown in Table 8 (Ref. 6). Water is considered soft if it contains less than 60 ppm calcium carbonate and is considered very hard if it contains more than 180 ppm. For the endurance testing it was decided to treat the water to 200 ppm to ensure that any liming tendencies would be uncovered.

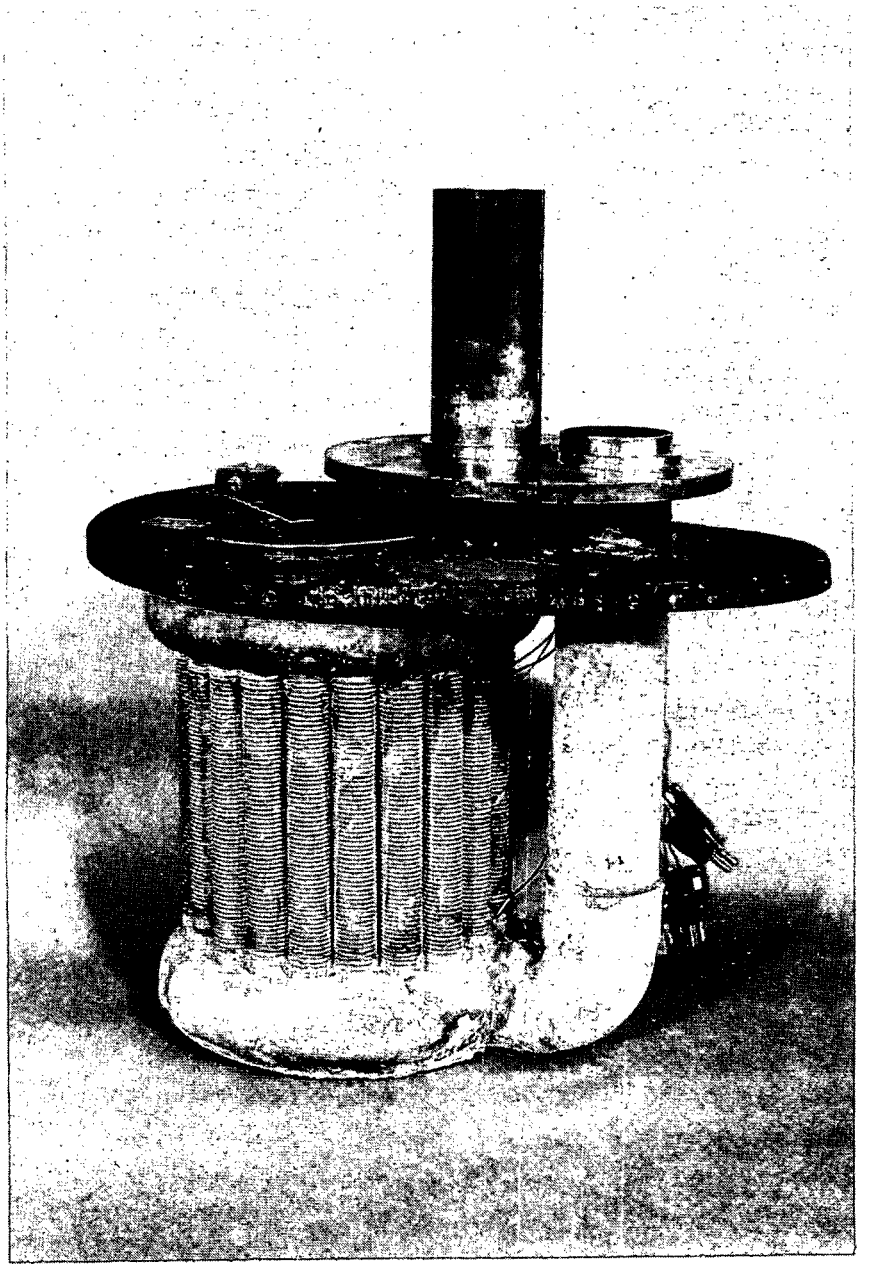

Figure 9. - PHOTOGRAPH OF HEAT EXCHANGER AFTER 2.9 YEARS' ACCELERATED USAGE

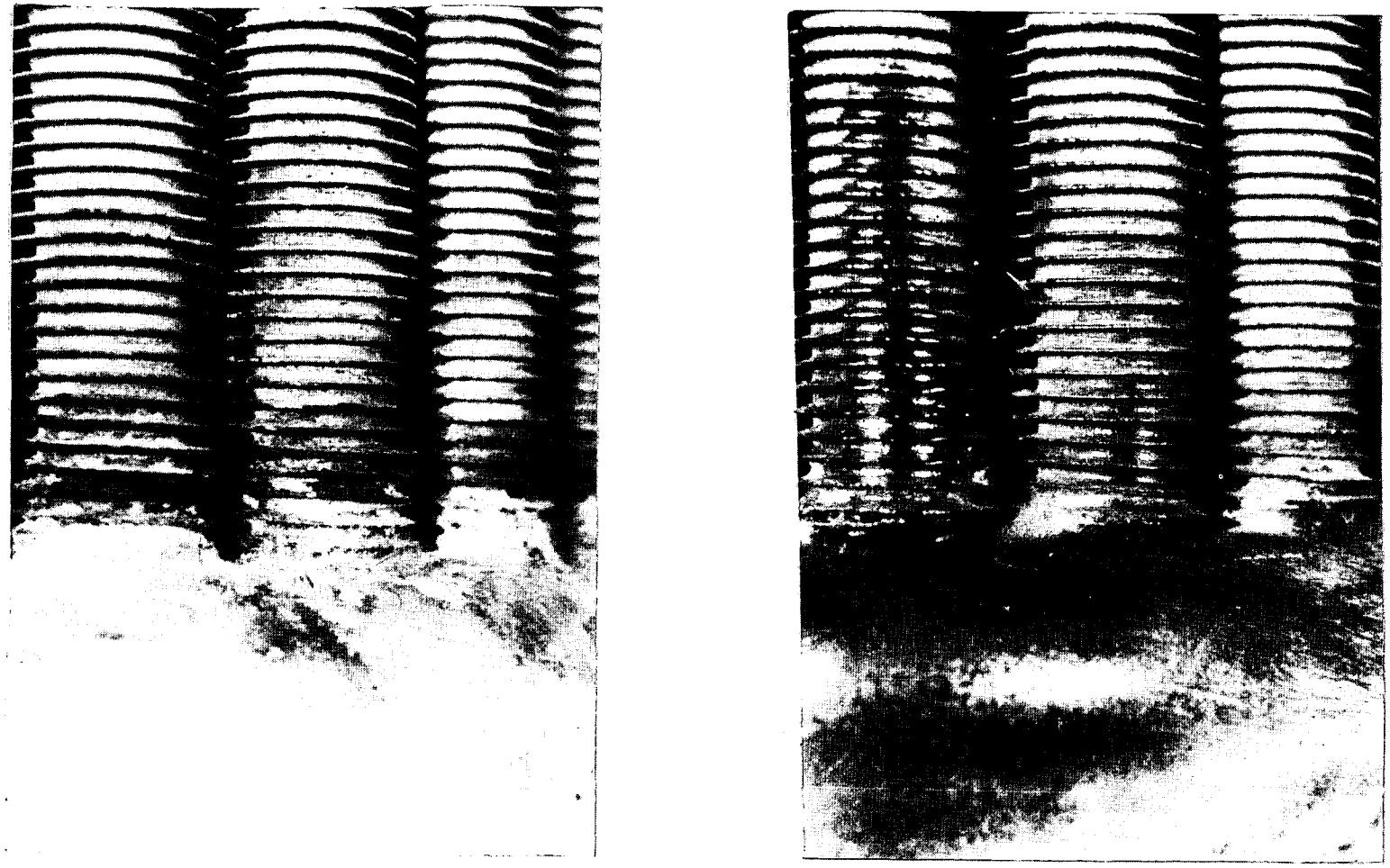

Figure 10. - PHOTOGRAPH OF LOWER HEADER AND BRAZE JOINTS BEFORE AND AFTER CLEANING (2.9 YEARS' USAGE)

AMTI

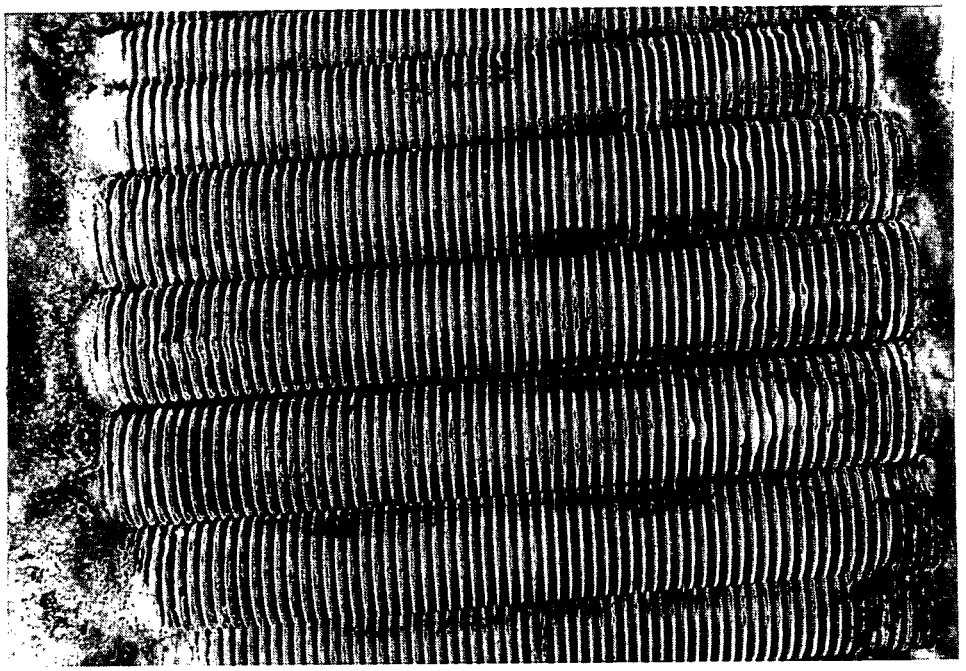

Figure 11. - PHOTOGRAPH OF FINNED TUBING AFTER 2.9 YEARS' ACCELERATED USAGE

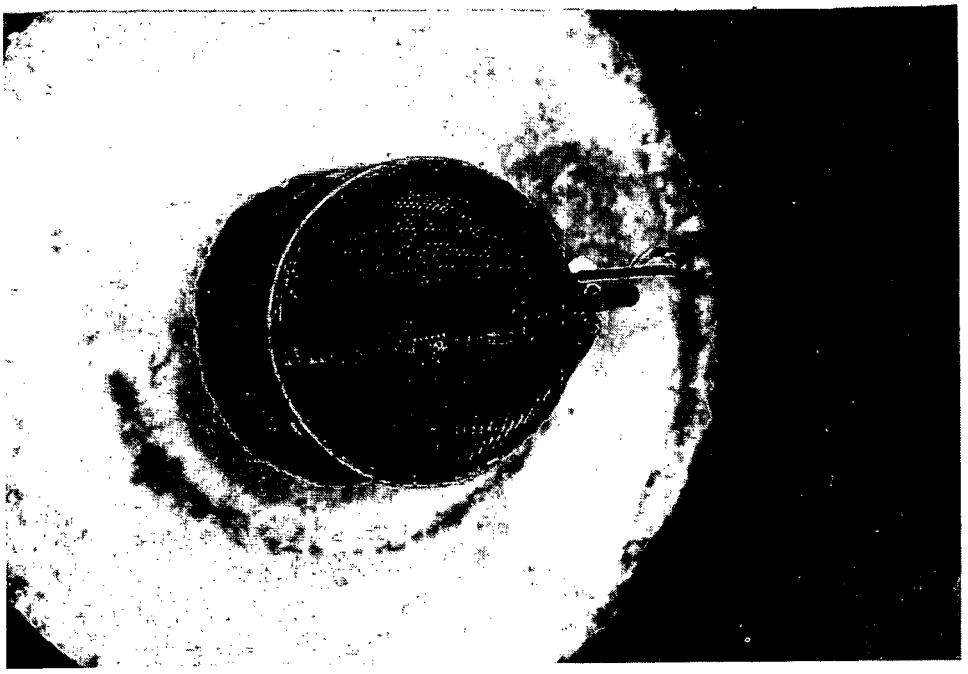

Figure 12. - PHOTOGRAPH OF FLAMEHOLDER (BURNER) AFTER 2.9 YEARS' ACCELERATED USAGE

Table 8. WATER HARDNESS CLASSIFICATION
(Ref. 6)

Classification	Hardness (ppm)*
Soft	< 60
Medium	60-120
Hard	120-180
Very Hard	>180

* Expressed as ppm calcium carbonate ($CaCO_3$)

This was considered a "worst" case test. The problem with the presence of calcium carbonate in the water supply can be better understood if Figure 13 is examined. Calcium carbonate is an "inverse" compound in that its solubility decreases as the water temperature increases. This is the opposite behavior of most compounds. Thus, if large amounts of calcium carbonate exist in the incoming cold water, they will be left as scale deposits on heated surfaces of the water heater. Initially, these will impede the transfer of heat and eventually clog flow passages, causing excessive metal temperatures, and in some cases, failure of the overheated parts.

The equipment added to the endurance test facility to create hard water is shown in Figure 14. A sample of Newton, MA, city water was taken to a chemical company and they recommended the addition of calcium chloride and sodium carbonate to the incoming cold water. A 10% solution of each was placed in 50-gallon containers and the solutions were injected into the cold water inlet at the rate of 15 gallons per day. At this rate, the 50-gallon supply lasted about 30 days.

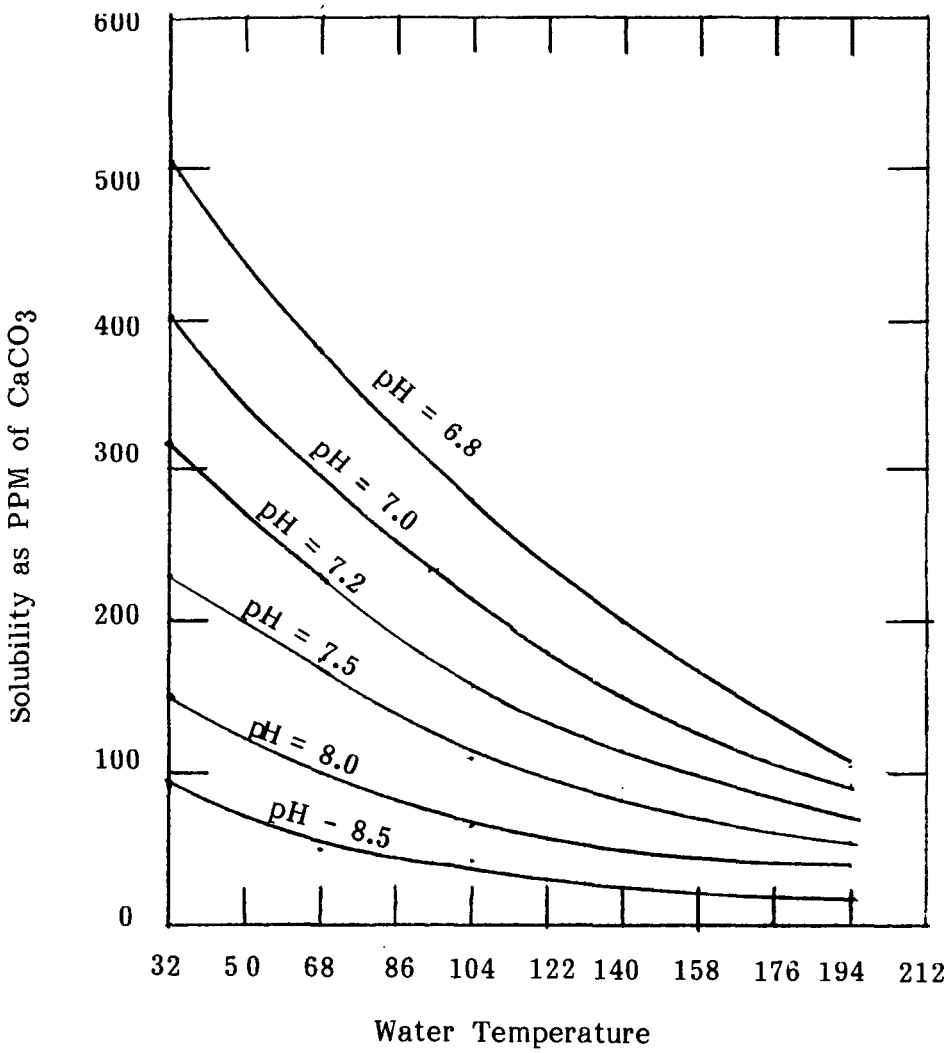

Figure 13. - SOLUBILITY OF CALCIUM CARBONATE IN DISTILLED WATER CONTAINING CARBON DIOXIDE

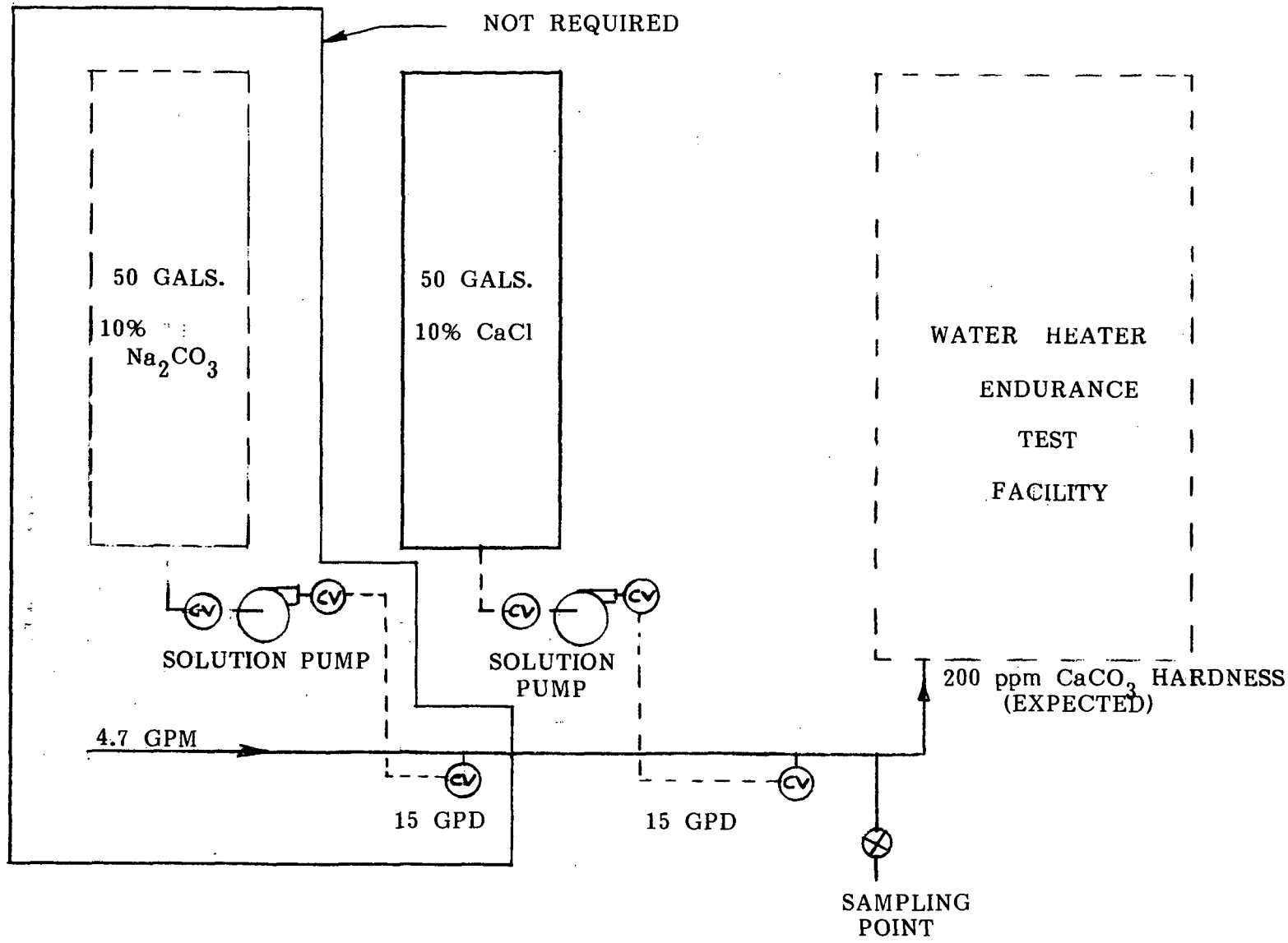

Figure 14. - WATER HARDENING EQUIPMENT FOR ENDURANCE TESTING

Initially, some difficulty was encountered in producing this artificially hard water. Before treatment, the water contained less than 60 ppm hardness at a pH of 6. Immediately after adding calcium chloride and sodium carbonate, the water hardness increased to 180 ppm but at a pH of 8.5 to 9.0. After a short period of time, the hardness decreased to 80-100 ppm and a pH of 8.5. As can be seen in Figure 13 at a pH level of 8.5 to 9.0, the solubility of calcium carbonate is less than 100 ppm. The chemical company that recommended the treatment for the lab water supply was contacted and the problem was described to them. They recommended that the addition of sodium carbonate be stopped and that only the calcium chloride be added. Apparently the water already contained sufficient dissolved carbon dioxide to react with the calcium to produce calcium carbonate. The first sample that they analyzed did not indicate the presence of carbon dioxide and this is why they recommended the addition of sodium carbonate. When the treatment equipment was run with only the calcium chloride, the hardness of the water was increased to 200 ppm while the pH remained at 6.0. Even after the sample was allowed to stand for several hours, the hardness remained at 200 ppm. During the endurance testing, the water was sampled frequently at the cold water inlet to the water heater and found to vary from 180 to 220 ppm.

The endurance test facility with hard water was operated for the equivalent of 1.92 years' water heater usage. During this test phase, the water heater burner accumulated 1,148 hours of operation. Hot water consumption was 45,157 gallons. The entire endurance testing with soft and hard water resulted in 2,949 hours of burner operation representing 4.82 years of water heater operation. During this period, 113,217 gallons of water were consumed.

The recovery efficiency versus operating time is shown in Table 9. The results for soft water tests are repeated in this table for reference. Again, little if any degradation in performance can be seen as a function of time. On the average, there might be a difference of one percentage point between the beginning and final tests, but the variability in the test measurements and utility gas heating value do not allow the drawing of this conclusion.

Table 9. ENDURANCE TESTING RESULTS

	Soft Water(1)	Hard Water(2)	Total
Hours of Burner Operation	1,801	1,148	2,949
Water Consumption (gallons)	68,060	45,157	113,217
Years at 64.3 GPD	2.9 yrs	1.92	4.82

RECOVERY EFFICIENCY (Natural Gas)

Hours of Operation	Excess Air (%)	Stack Temperature (°F)	Recovery Efficiency (%)
	A. SOFT WATER		
0	40-45	323/371	83.6
324	40-50	320/366	79.0
396	40-45	320/377	82.9
832	38-42	309/361	79.3
854	34-40	314/369	79.3
1576	34-40	330/380	80.7
1800	50-60	300/360	80.2
	B. HARD WATER		
1800	40-47	320/370	79.0
1898	46-55	330/380	76.0
2064	39-44	310/360	78.1
2274	40-46	285/340	79.5
2461	48-52	250/300	77.7
2567	45-48	250/300	77.7
2714	43-50	300/350	80.0
2776	43-50	300/350	80.0
2890	46-48	315/350	78.0
2890	39-44	285/330	77.0

(1) Hardness - 20 ppm $CaCO_3$

(2) Hardness - 200 ppm $CaCO_3$

At the end of the endurance testing with hard water, the heat exchanger was again removed from the water heater. The outside heat exchanger surfaces were similar to those shown in Figures 9 through 12. Again the internal flow passages did not show any evidence of scale due to the presence of lime in the water. However, the flange which connected the heat exchanger to the tank did show evidence of lime build-up as can be seen in Figure 15. The upper picture in Figure 15 also shows the build-up of lime on the thermocouple probe in the downcomer. This was unexpected especially since it was one of the colder sections of the heat exchanger. It is felt that some kind of galvanic cell caused this build-up. This was not considered a problem since the production water heater would not have any probes installed in the riser or downcomer.

Two failures occurred during the endurance test with hard water. One of the failures was the facility solenoid valve which was installed in the hot water outlet line. It became clogged with lime and had to be cleaned. This was not considered a serious problem since it was not a water heater component. The other was the failure of the tank liner near one of the top fittings. This was a design problem existing in early AMTROL prototypes which is corrected in the current production version.

While no evidence of scaling on the heat exchanger surfaces could be found visually (the heat exchanger was not cut apart for close examination), heat exchanger wall temperatures were monitored for any increase which would show a decrease of the water-side heat transfer coefficient. This would indirectly indicate the presence of scale on the inside tube wall. A 30°F wall temperature rise would be equivalent to a lime scale thickness of about 2.5 thousandths of an inch. Figure 16 shows the temperature-time history of three positions were for approximately the same conditions, that is, firing rate, excess air, and water inlet temperatures, there is no trend upward to indicate the building up of lime in the heat exchanger. This supports the visual evidence.

As a whole, it was felt that the endurance testing was both a valuable and informative exercise. It was shown that the water heater prototype was capable of almost five years of water heater operation with no major design

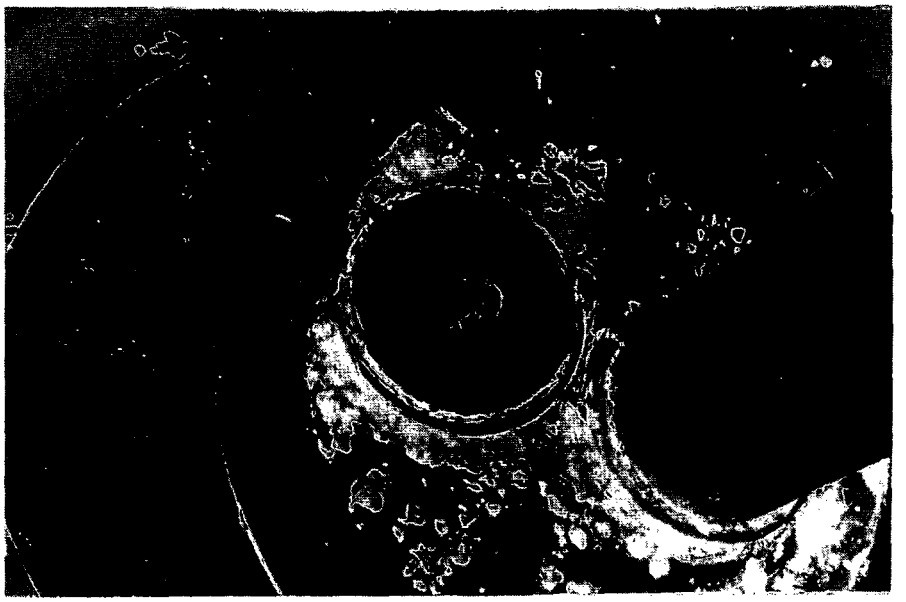

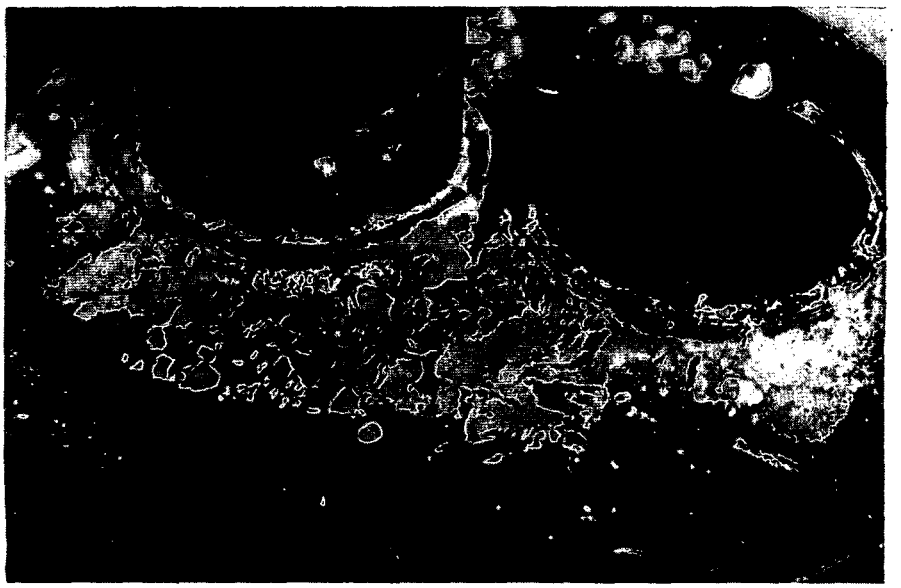

Figure 15. - PHOTOGRAPHS OF LIME DEPOSITS ON HEAT EXCHANGER FLANGE AFTER 1.8 YEARS' ACCELERATED USAGE TESTS

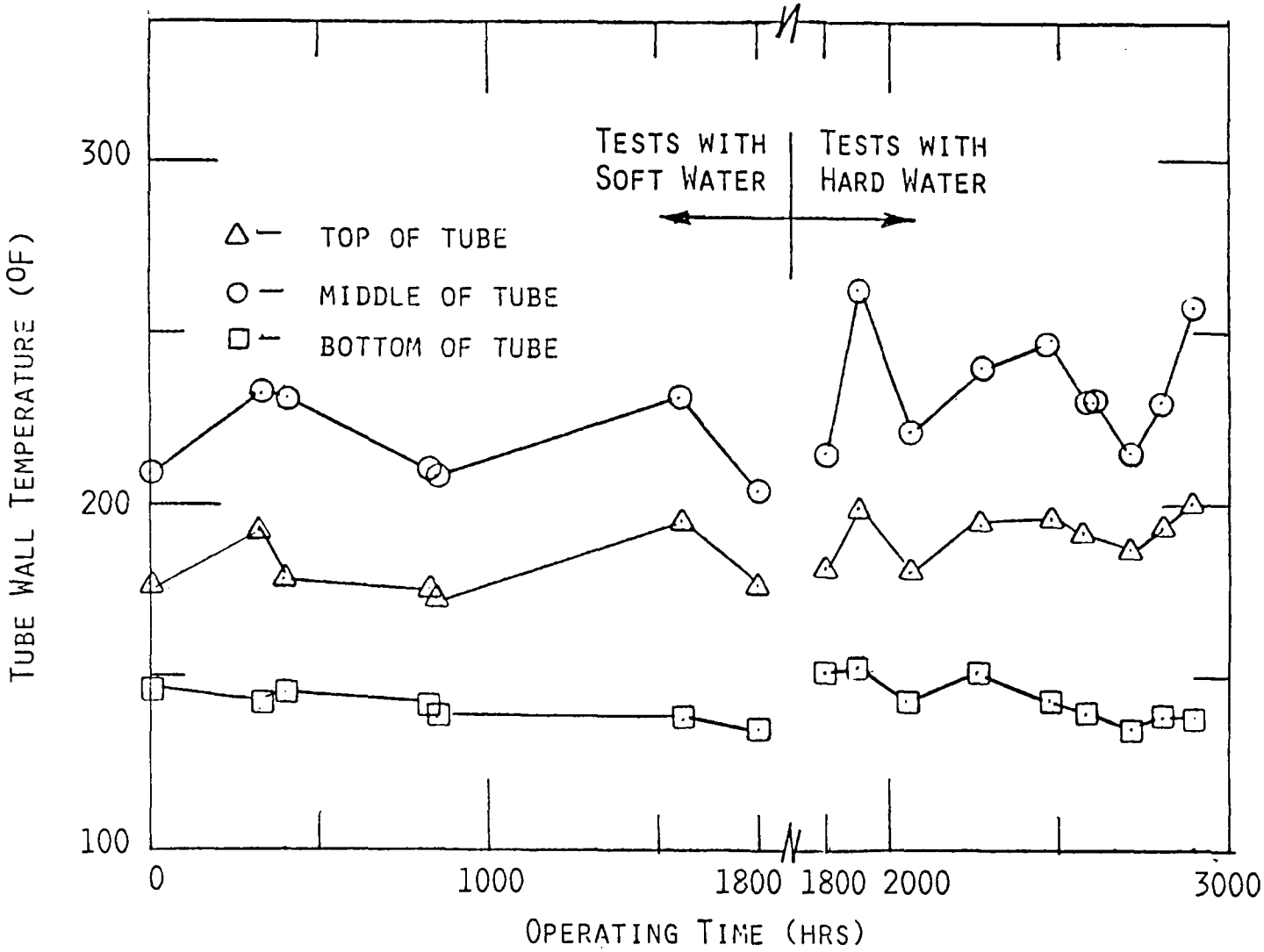

Figure 16. - HEAT EXCHANGER TUBE WALL TEMPERATURE HISTORY DURING ENDURANCE TESTING

flaws and no degradation of performance. A potential problem of corrosion of the heat exchanger surfaces and exhaust ducting was found. While this did not result in failure, further investigation is indicated. Tests with hard water show that the heat exchanger does not have any potential liming problems and the only lime found in the unit was in non-performance related areas.

4.0 REFERENCES

1. A. D. Vasilakis, J. F. Pearson and J. Gerstmann, "Research and Development of a High-Efficiency Gas-Fired Water Heater, Volume 2: Task Reports," Prepared for Oak Ridge National Laboratory by Advanced Mechanical Technology, Inc., ORNL/Sub-7381/2, January 1980.

2. "Energy Conservation Program for Appliances: Test Procedures for Water Heaters," Federal Register, Part III, October 4, 1977.

3. ASHRAE Standard 90A-1980, "Energy Conservation in New Building Design," The American Society of Heating, Refrigerating, and Air-Conditioning Engineers, New York, NY, 1980.

4. "American National Standard for Gas Water Heaters," Volume I, ANSI Z21.10.1-1975, American Gas Association.

5. "Control of Nitrogen Oxides from Residential-Type Natural Gas-Fired Water Heaters," Rule 1121, Rules and Regulations, South Coast Air Quality Management District, El Monte, CA; adopted December 1, 1978.

6. "ASHRAE Guide and Data Book: Systems and Equipment 1967," ASHRAE, New York, 1967.

7. "Study of Energy-Saving Options for Refrigerators and Water Heaters", Volume 2: Water Heaters; Arthur D. Little, Inc., prepared for The Office of Transportation and Appliance Programs, FEA, Contract No. C004-50228-00, May 1977.

RESEARCH AND DEVELOPMENT OF A HIGH-EFFICIENCY GAS-FIRED WATER HEATER

PRODUCTION PROTOTYPE DESIGN AND DEVELOPMENT

TASK 2.2 REPORT

AMTI

TABLE OF CONTENTS

		PAGE
1.0	INTRODUCTION AND SUMMARY	2.2-1
2.0	PROTOTYPE COMPONENT DEVELOPMENT	2.2-3
	2.1 Combustion System	2.2-3
	2.1.1 Burner/Aspirator	2.2-3
	2.1.2 Ignition System	2.2-10
	2.2 Heat Exchanger	2.2-25
	2.3 Tank Design	2.2-33
	2.4 Exhaust System/Stack Development	2.2-40
3.0	WATER HEATER SYSTEM EFFICIENCY TESTS	2.2-44
	3.1 Water Heater Assemblies	2.2-44
	3.2 Recovery Efficiency	2.2-44
	3.3 Standby Loss	2.2-48
	3.4 Service Efficiency	2.2-54
4.0	SPECIAL TESTING	2.2-61
	4.1 Capacity Tests	2.2-61
	4.2 Stacking	2.2-63
	4.3 Combustion Testing	2.2-66
	4.4 Corrosion Protection Testing	2.2-69
5.0	COST EFFECTIVENESS EVALUATION	2.2-77
6.0	REFERENCES	2.2-85

1.0 INTRODUCTION AND SUMMARY

The objective was to improve the efficiency, manufacturability, and serviceability of the high-efficiency gas-fired water heater which was developed in an earlier phase of the project.

AMTROL, the manufacturing partner in this project, performed a manufacturing evaluation of the water heater and made several suggestions for improving the manufacturability while at the same time improving the serviceability (see the Task 2.1 portion of this report). These included redesigning the heat exchanger, ignition system, and most significantly, the combustion system. During Phase II of the project, a combustion system was developed which was one-third the size of the combustion system developed in Phase I. In spite of its smaller size, it had performance equivalent to the larger unit including lower emissions and high recovery. It also eliminated a "hooting" noise present in the larger system at low excess air levels.

Several tank designs were tested including two production tank designs that AMTROL manufactured and a prototype tank with external low-density insulation and a rotationally-molded liner.

One of the more notable achievements was the demonstration of a battery-powered ignition system. The system used a battery to ignite the pilot burner. A battery life of greater than 10 years is predicted for the system. A special gas valve was also designed and built for use with the ignition circuit.

The efficiency improvements undertaken in this phase decreased standby losses by 43%. This resulted in a measured service or water heating efficiency of 71.4%, exceeding the project goal of 70%. This was done primarily through increased tank insulation and use of the battery-powered intermittent ignition device (IID).

Finally, a cost effectiveness evaluation was performed on the project water heater. Large production run (approximately 100,000/year) price estimates of $410 and $460 were made for the water heater with a gas pilot and battery IID, respectively. Prices for smaller quantities (approximately 10,000/year) were $200 to $250 higher. For large quantity pricing, paybacks of three to four years were calculated based on average national gas prices of $5.00/MMBtu. This was compared to both conventional units and commercially available units meeting ASHRAE 90A-1980 STANDARD (Ref. 1).

2.0 PROTOTYPE COMPONENT DEVELOPMENT

During the course of Phase II, several sets of prototype hardware were developed for each component. Assemblies were made of several of these, resulting in three distinct water heaters. This section deals with the development of each component from its state in the Phase I prototype to the final design existing at the end of Phase II. For convenience, the water heater assemblies are designated as the MK I, MK II, MK III, and MK IV. MK I is used to describe the Phase I prototype and its components while the others refer to the Phase II work.

2.1 Combustion System

One of the most significant achievements of the Phase II work was the development of a highly advanced combustion system. The system is based on a premixed design and utilizes natural-draft principles to achieve operation. This concept results in a very compact flame with low emissions, especially oxides of nitrogen.

2.1.1 Burner/Aspirator

The burner/aspirator which existed at the completion of the Phase I project (Ref. 2) is shown in Figure 1. The performance of this (MK I) combustion system was considered technically successful. However, there were two disadvantages to the design. The first was an intermittent combustion noise at low excess air rates that limited its operating range. The second was its large size which led to packaging compromises. As can be seen in Figure 2, which shows the burner/aspirator installed in the MK I water heater assembly, the aspirator could not be packaged under the skirt. A more compact (and less expensive) unit was desired.

The approach used to develop the Phase II combustion system, summarized in Figure 3 as a series of four milestones, was a combination of analytical and experimental techniques.

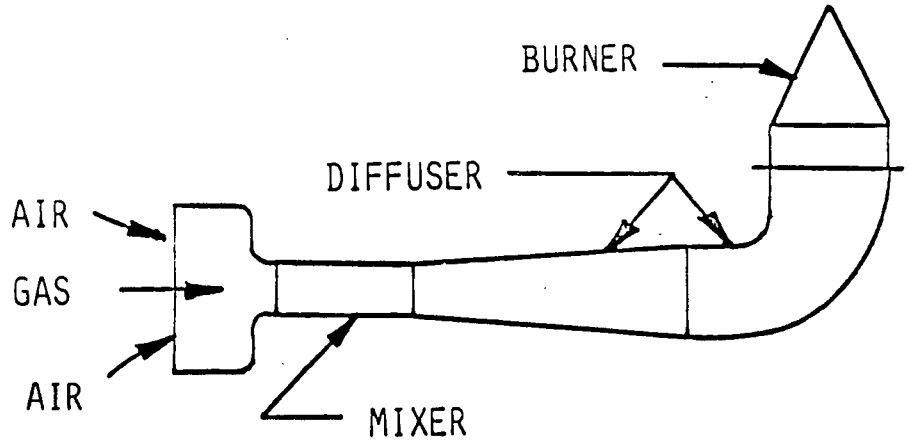

BURNER/ASPIRATOR

Figure 1. - PHASE I BURNER/ASPIRATOR

AMTI

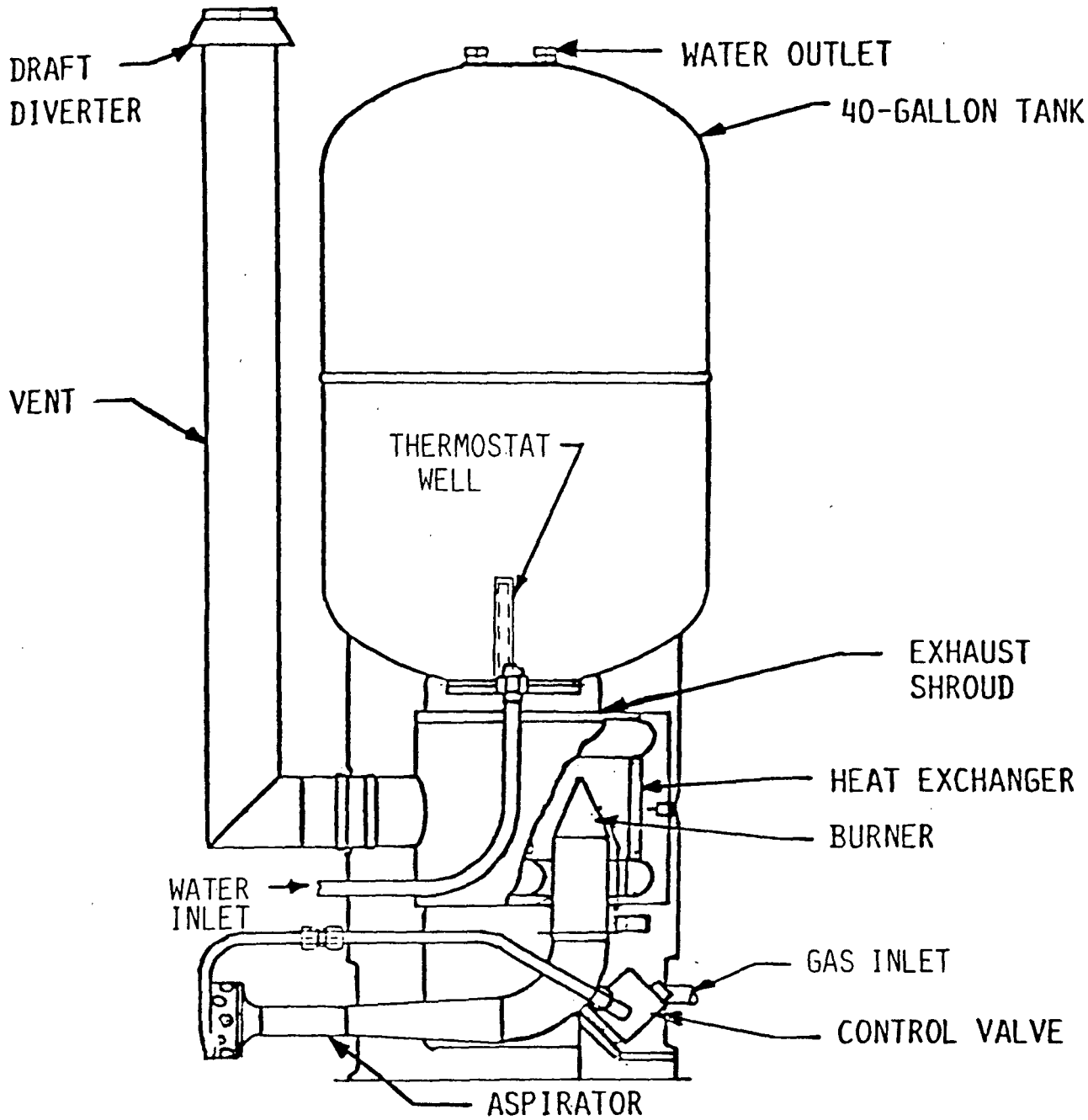

Figure 2. - MK I PROTOTYPE WATER HEATER

EARLY PROTOTYPE (MK I)

-- 55% EXCESS AIR @ 41,500 BTU/H

-- LOW EMISSIONS

-- SOME COMBUSTION NOISE

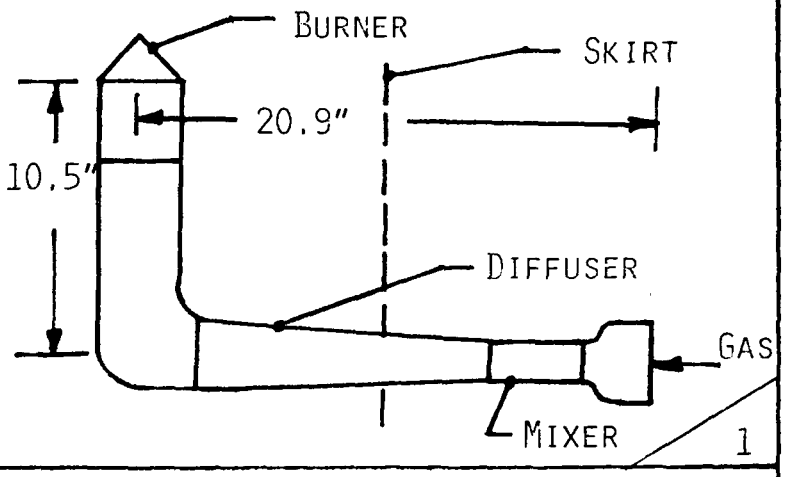

- SPLIT DIFFUSER
- LOW PRESSURE DROP FLAMEHOLDER

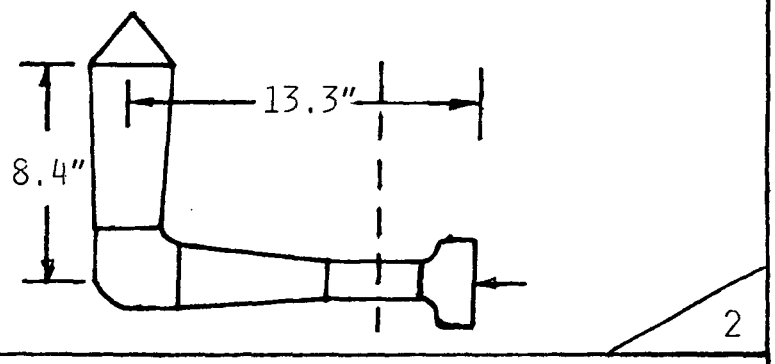

- MULTIPLE JET NOZZLE
- MIXER ELIMINATED

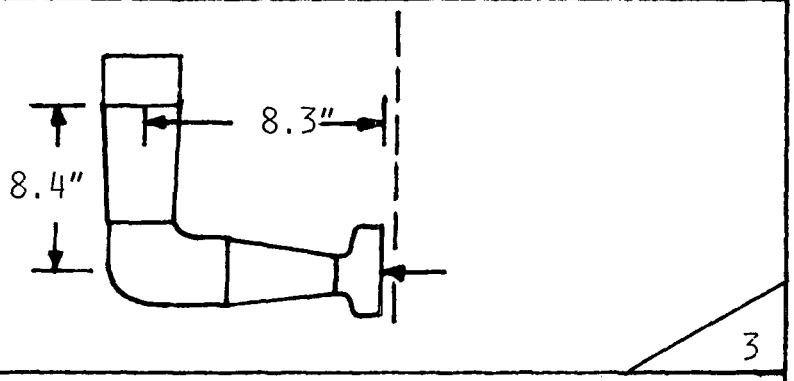

- CUSP DIFFUSER
- ELBOW ELIMINATED
  - -- 62% EXCESS AIR @ 40,000 BTU/H
  - -- LOW EMISSIONS
  - -- NO NOISE

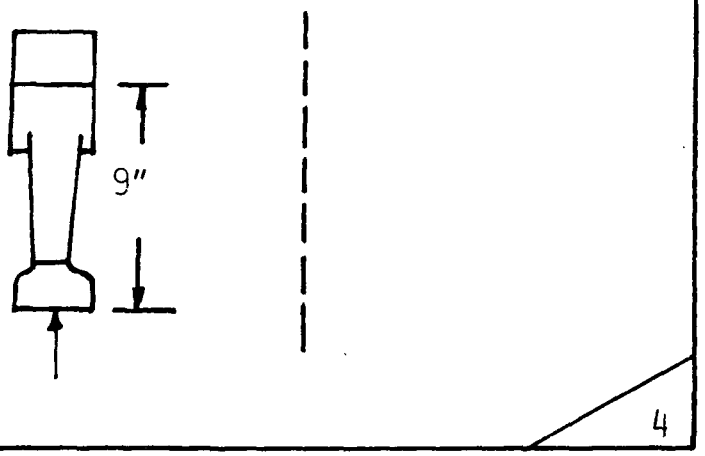

Figure 3. - COMBUSTION SYSTEM MILESTONES

The base case for the start of the development was Milestone 1, the prototype developed in Phase I of the program. The aspirator consisted of a 4-inch bell-shaped inlet which necked down to a 1.6-inch diameter, 5-inch long mixing section. The diffuser consisted of an 11.5-inch long conical section which started at a 1.6-inch mixer diameter and ended in a 2.5-inch diameter. The diffusion continued in an elbow which varied from a 2.5-inch inlet to a 3-inch exit diameter. The cross section then remained constant while the gas/air mixture was ducted to the burner. This resulted in a total gas/air flow path of about 31.5 inches. As mentioned, one of the packaging constraints imposed on the design was the requirement that the aspirator fit inside the 19-inch diameter skirt which acted as the tank support. The Phase I aspirator stuck out 11.4 inches beyond the skirt.

Two separate steps were taken which resulted in the configuration in Milestone 2: the use of a low pressure drop flameholder, and a split (two-step) diffuser. The original flameholder was a cone with a 3-inch diameter base and a 3.7-inch height. It consisted of a perforated stainless steel sheet with 37% open area. A new flameholder pattern was tried which had approximately the same open area and hole size as the first, but was made of a thinner stainless steel and had tapered instead of straight holes.

The improved diffuser consisted of two pieces. This change was made to substitute a diffuser for the vertical straight section which was simply being used as a straight duct. The first (horizontal) diffuser section of Milestone 2 had a 1.6-inch diameter inlet and 2.07-inch outlet with a 3.25-inch length. While different diffuser lengths were tried, 3.25 inches was the shortest that gave acceptable performance. This section was theoretically capable of recovering 64% of the velocity head. The second (vertical) diffuser section went from 2.07 inches to 3 inches over a 5.375-inch length. Again, several lengths were tested with this being the shortest which gave acceptable performance. This second diffuser could theoretically recover 28% of the velocity head at the 1.6-inch diameter.

The performance of the combustion system labeled as Milestone 2 was roughly equivalent to that of the Phase I design while it was about 10 inches shorter than the Phase I prototype. It still protruded about 4 inches beyond the skirt.

The next aspect of the aspirator to be examined was the mixing process. It was felt that the use of multiple gas jets versus a single jet would greatly enhance the mixing process. The combustion system shown as Milestone 3 is the result of the successful development of a multi-jet nozzle. While different nozzles were tested, including straight and swirl flow types, the configuration selected consisted of eight .041-inch diameter holes with a 10-degree swirl angle. The holes were spaced to provide uniform coverage of the 1.6-inch mixer inlet. The gas nozzle is shown in Figure 4. As is evident if Milestone 3 of Figure 3 is examined, this multi-jet nozzle eliminated the need for the 5-inch, 1.6-inch diameter mixing section. The flameholder configuration was changed from conical to cylindrical in Milestone 3 to produce a more manufacturable shape. The combustion system could now fit entirely inside the skirt and was one-half the original flow length.

The flow performance of this aspirator, in addition to being equivalent to the original prototype, had a secondary benefit. At low excess air (30%), the original prototype exhibited a hooting noise which limited the operating range of the combustion system. The Milestone 3 combustion system improved the operating range because the noise did not occur above 10% excess air.

While the project goals were essentially met with the Milestone 3 combustion system, it was felt that with slightly more development work a much greater gain could be obtained. There were two reasons for this conclusion. Up to this point, the combined length of the mixer and the first diffuser was greater than the vertical space available below the heat exchanger, necessitating the use of an elbow for packaging the combustion system. The elimination of the mixer and the separation of the diffuser into a primary and secondary stage opened the possibility of eliminating the elbow (which only contributed pressure drop to the system) and packaging the combustion system vertically under the tank.

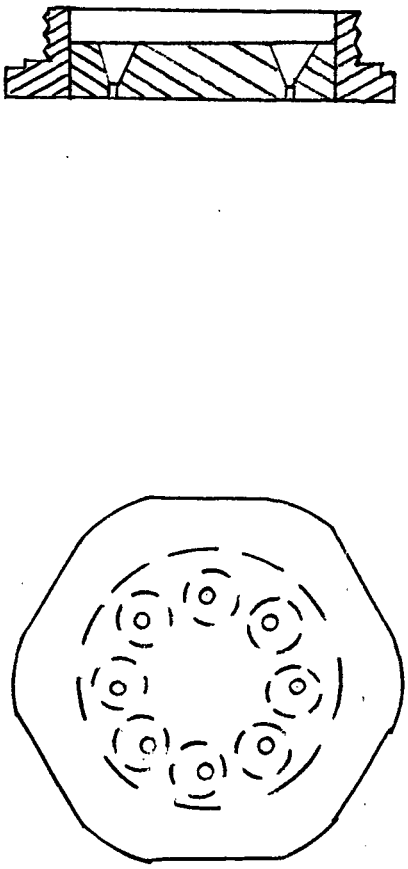

Figure 4. - MULTI-HOLE GAS NOZZLE

Since the second stage of the diffuser only accounted for 28% (theoretically) of the total recovery, a low second-stage recovery would be acceptable if it resulted in reduced length. This situation would be helped by the decrease in pressure drop caused by eliminating the 90-degree bend. First, a simple sudden expansion was attempted but it had unacceptable pressure losses. A cusp-type diffuser proved acceptable and was selected for the second-stage diffuser. The performance of this unit was equal to or better than the Phase I prototype and no noise was observed at any operating condition. A detailed view of the final Phase II configuration is shown in Figure 5.

Two different flameholder materials were used with the combustion system shown in Figure 5. These were the thin stainless steel material described earlier and a heavier stainless steel material which had slots instead of holes. This latter material was easier to work with and had slightly lower emissions. The flameholder made of slotted material is pictured in Figure 5, installed on the aspirator.

Emissions of oxides of nitrogen did not change with this new combustion system as can be seen in Figure 6. Emissions for both the Milestone 1 (Phase I) combustion system and Milestone 4 (Phase II) are plotted in the figure. They remain low due to the premixed burner design and are well below the South Coast Air Quality Management District (SCAQMD) standards (Ref. 3) also plotted in Figure 6.

2.1.2 Ignition System

The ignition system for the high-efficiency water heater has undergone several iterations, ranging from a standing gas pilot to a battery-powered ignition system.

The pilot in service at the end of the Phase I program is shown in Figure 7 and is described in detail elsewhere (Ref. 2). The concept followed conventional practice, that is, a standing gas pilot heated a thermocouple whose output kept a first gas valve open. This, in turn, provided gas to the main burner valve. A thermostat located in the tank operated the main burner valve. If the pilot extinguished for any reason, the first gas valve closed. The unique feature of this pilot is that it

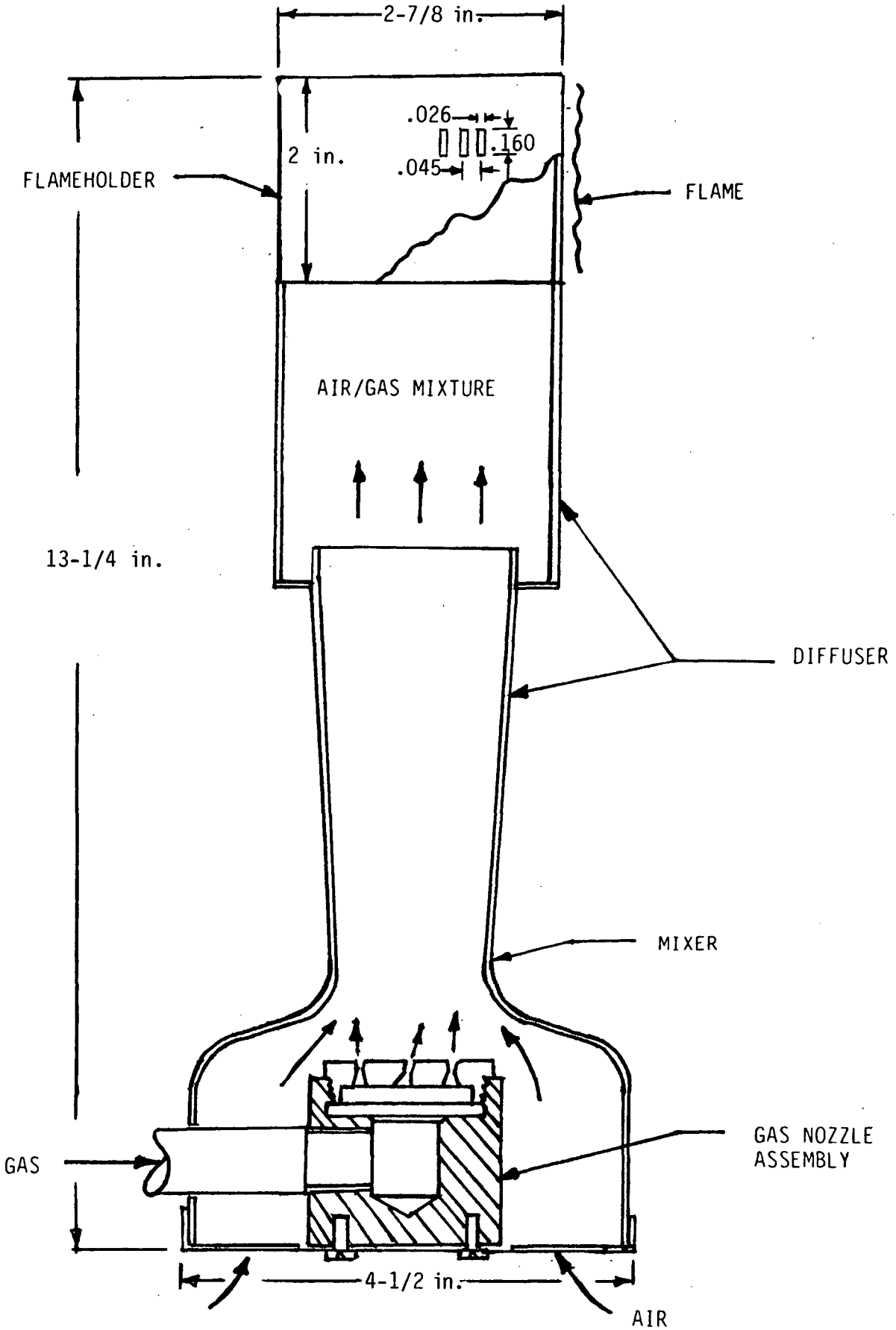

Figure 5. - FINAL PHASE II COMBUSTION SYSTEM

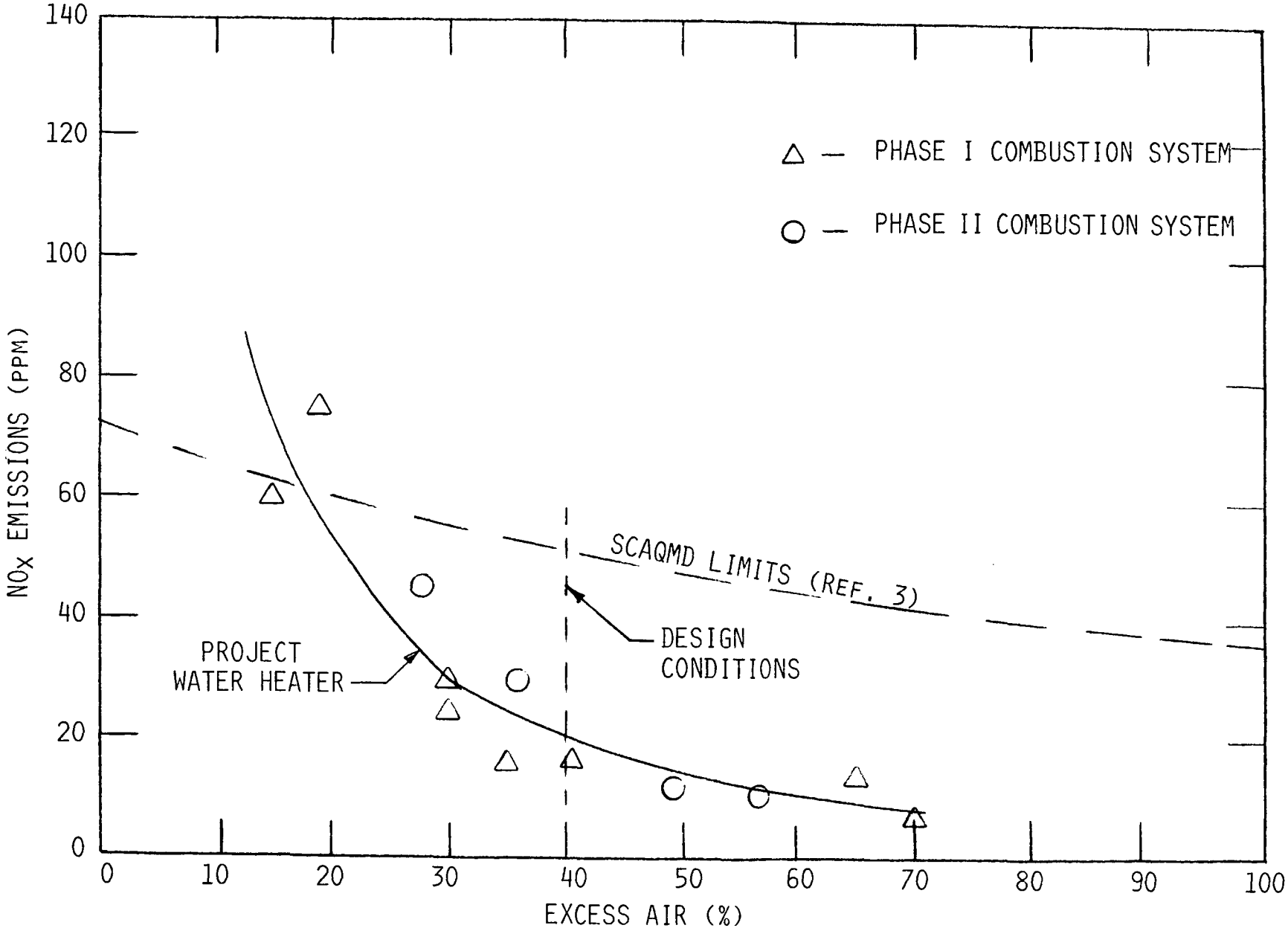

Figure 6. - COMPARISON OF NO_X EMISSIONS FOR PHASE I AND PHASE II COMBUSTION SYSTEMS

AMT.

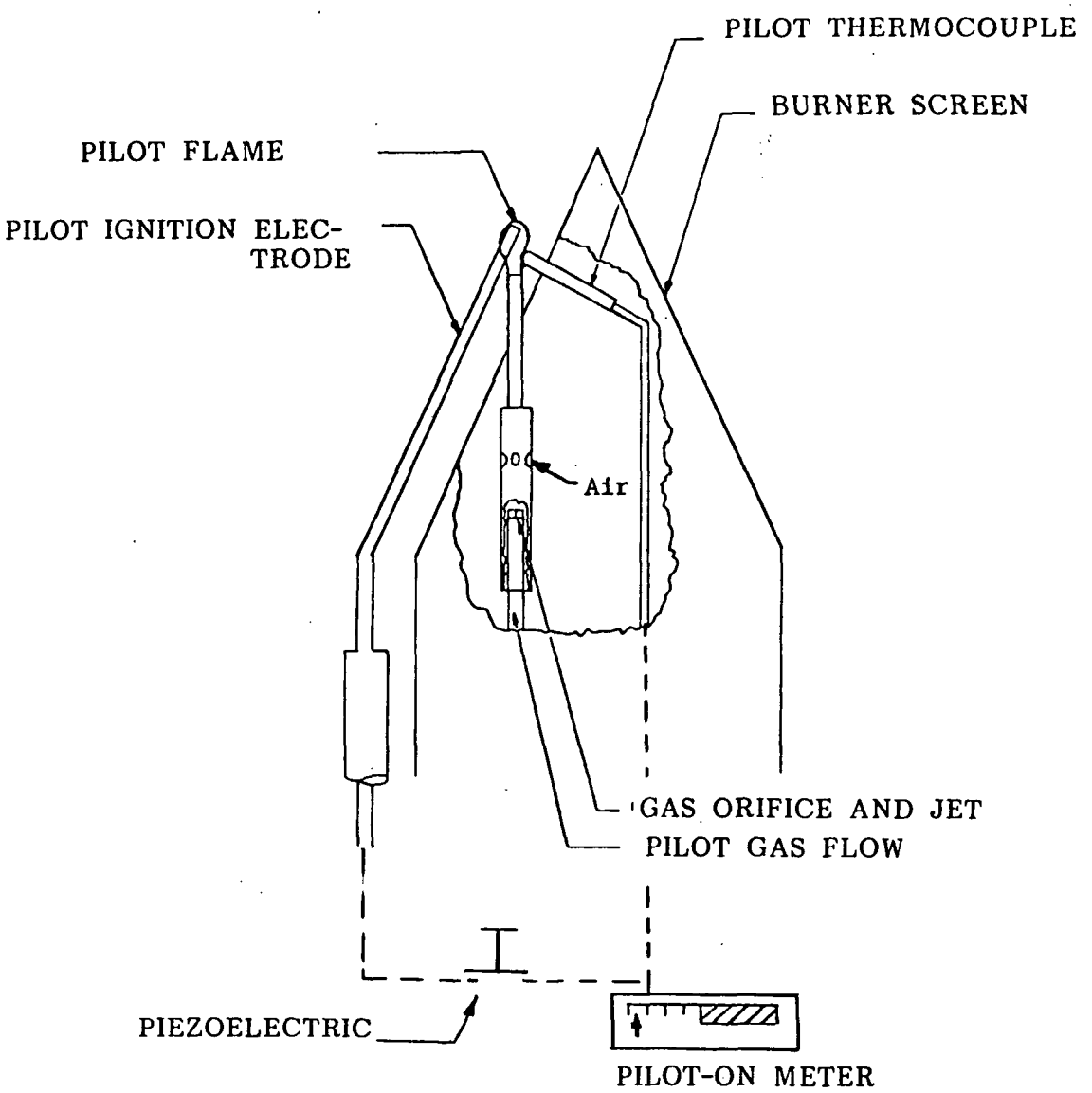

Figure 7. - PHASE I PROTOTYPE WATER HEATER PILOT

had a low (275 Btu/hr) input, was positioned inside the combustion chamber, and resulted in a 30% pilot energy recovery (Ref. 2). One of the consequences of this design was that a piezo-electric ignition system was required to light the pilot. One of the serious drawbacks of this design was the serviceability of the pilot. In order to replace or work on the pilot, the burner assembly had to be removed.

The first design change was to select a new method of mounting the pilot other than through the flameholder. It was decided to install the pilot from the side in between the vertical tubes in the heat exchanger. This was done by increasing the pitch circle for the 21 finned heater tubes in the heat exchanger so that the pilot could be positioned where a "22nd" would have been installed (see Section 2.2 for heat exchanger description). Figure 8 shows the first Phase II pilot approach. This consisted of a normal pilot which used a flashtube to ignite it. The flashtube is a commonly used device to light burners, especially in gas ranges. The disadvantage of this approach was the critical alignment required between the flashtube and pilot. The next pilot design tried is shown in Figure 9. It used an existing (off-the-shelf) design. It was a compact arrangement with the thermocouple for operating the gas valve integrated into the design. While it could not be remotely lit as with a flashtube, it could be located close enough to an access hole that a match could light the pilot. This pilot design was the choice for the Phase II standing gas pilot and was used in the MK II, MK III, and MK IV (without IID) water heaters. The pilot used with the MK IV IID system was a simple bunsen burner type similar to that shown in Figure 7. It was not, however, mounted on the flameholder as shown in Figure 7 but was mounted from the side between finned tubes.

One of the concerns with any change in the pilot design was any loss of pilot recovery from the 30% measured in Phase I. Table 1 shows the recovery efficiency of the pilot shown in Figure 9. It was found to have a recovery of 31.7% compared to 30% for the Phase I prototype, thus the energy effectiveness of the water heater was not jeopardized by changing the pilot design.

While some of the gas pilot input was being recovered, there was still a pilot loss of about 200 Btu/hr during standby operation. It was to eliminate this loss that an IID was examined for use with the burner.

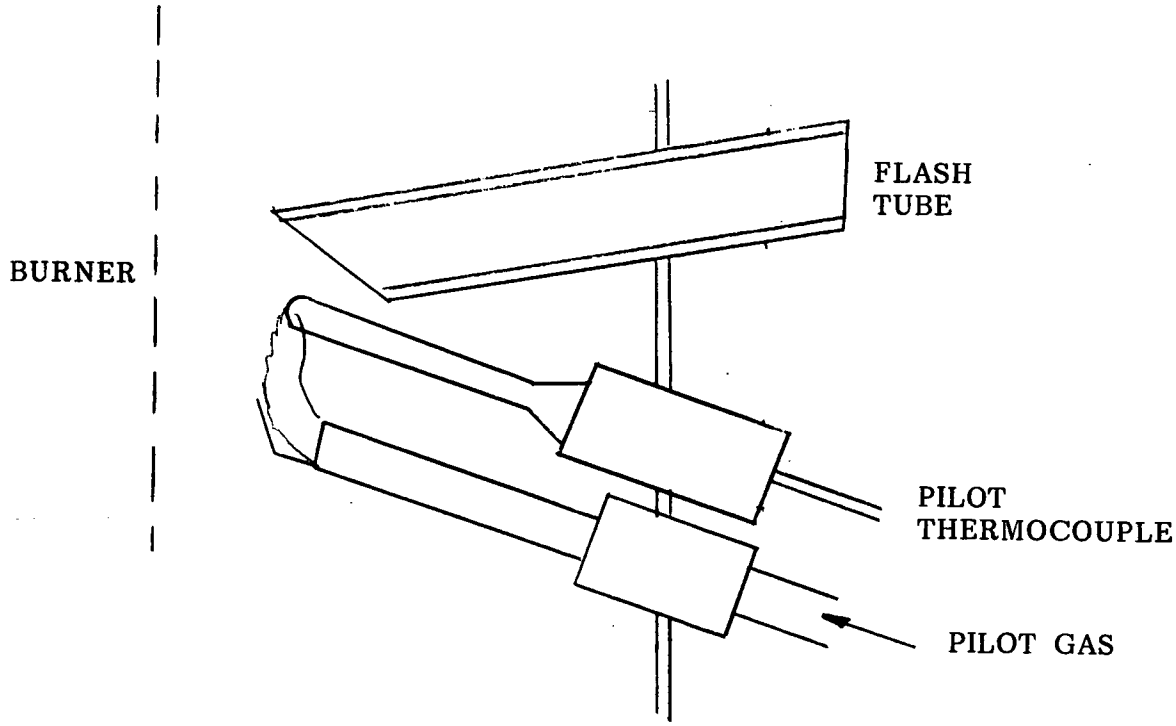

Figure 8. - FLASH TUBE LIGHTED PILOT

AMTI

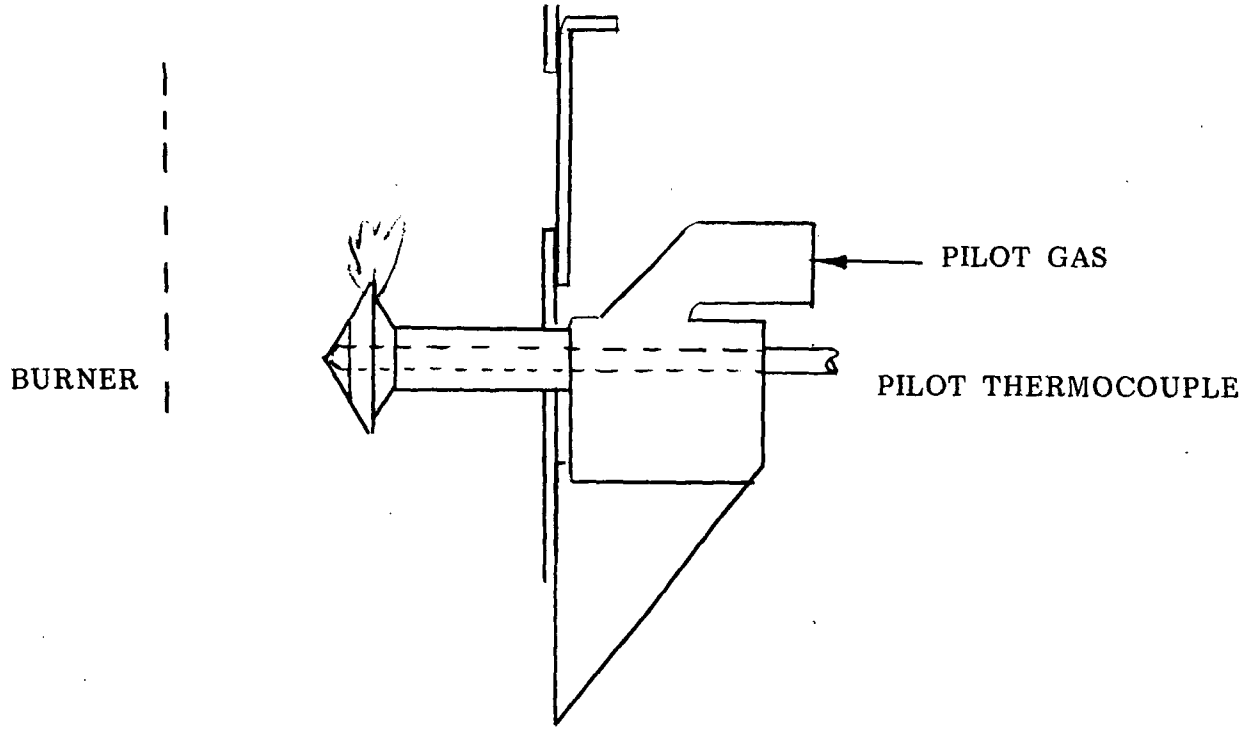

Figure 9. - PHASE II PILOT USED IN MK II, MK III AND MK IV WATER HEATERS

AMTI

Table 1.

RECOVERY EFFICIENCY FOR SIDE-MOUNTED PILOT USED IN PHASE II

Water Heater Assembly	Pilot Input (Btu/hr)	Average Tank Temperature (°F)	Average Air Temperature (°F)	Heat Loss[1] (Btu/hr)	Pilot Recovery (Btu/hr)	Pilot Recovery Efficiency
MK III	0	144.7	69.	506	106	35%
	303	144.1	74.7	400		
MK III	0	147.6	67.	572	88.2	28.4%
	310	144.6	66.	484		
Average Pilot Efficiency = 31.7%						

(1) Heat loss corrected for constant air-to-water temperature difference

AMTI

In order to reconcile the approach with the goal of not requiring an electric power connection, an unconventional approach was required. One study which reviewed methods of "stand-alone" (non-powered) ignition devices mentioned battery-powered systems as a possible approach (Ref. 4).

A concept using a battery to operate a spark-ignition circuit appeared to be the most practical solution. There were three possible battery options:

1. Conventional batteries with frequent (annual) replacement.

2. Rechargeable batteries using the burner's thermal energy for operating a recharging system.

3. High-energy, long-life, non-rechargeable (e.g., lithium batteries with the potential for greater than a 10-year life.

It was felt that an approach was required which would have the potential for lasting at least the life of a conventional water heater. The use of conventional batteries with the homeowner replacing them on or about an annual basis was considered an unacceptable approach for two reasons. First, water heaters do not normally require service or annual maintenance by the homeowner, thus this was considered a negative sales feature. Second, the homeowner would probably find out about battery failure when hot-water service ceased, which was considered unacceptable.

The second approach, the use of a rechargeable battery, while eliminating the need for frequent battery replacement, would still have a limited life. Rechargeable nickel-cadmium batteries have about a five-year shelf life and the homeowner would still have a maintenance problem. Also, a high-efficiency low-voltage circuit would be required which would use a thermopile to recharge the battery.

The third approach, the use of a lithium battery, was the approach chosen for two reasons. First the energy density was sufficient to last greater than 10 years if an efficient circuit was designed. Also, a 10-year shelf-life for lithium batteries is reported for commercially

available batteries. A 10-year storage capacity is not useful if the shelf-life is much less. Figure 10 shows a typical shelf-life curve for a battery such as was used for the water heater ignition system. At 73°F, the battery has a projected 80% of capacity remaining at the end of 10 years. Newer lithium cells are reporting a 90% capacity after 10 years.

The energy required for simply providing sparks for 15 years of water heater operation is relatively minor. The energy required per spark for igniting a natural-gas/air mixture was measured to be 10 millijoules for a conventional ignition system. Based on unpublished field-test measurements of a residential gas-fired water heater, 14 starts per day were selected as a conservative requirement on the high side. At an assumed three sparks per ignition, the theoretical storage capacity required for 15 years of operation is 0.64 watt-hours. Based on this information the ignition circuit shown in Figure 11 was designed, built and tested. It was designed to operate with a 3-volt battery and had an efficiency of 38%. Thus the 15-year storage requirement became 1.7 watt-hours. This circuit was bench tested with a 3-volt lithium penlight-size battery (3 watt-hour capacity) and demonstrated the equivalent of 15 years of sparks (230,000). The circuit consists of a DC-DC chopper, a special step-up transformer (T1), a capacitor charging circuit, and an output transformer (T2) into which the capacitor is discharged.

A special transformer was developed which limits the draw on the battery, thus prolonging battery life. This special transformer is of a current-limiting design with a parallel input capacitor to supply the magnetizing current. This current would otherwise be supplied from the battery, thus depleting it. The circuitry after the transformer is a voltage doubler and a discharge circuit which discharges the capacitor into a high-voltage transformer to generate a high-voltage arc. Part of the circuit prevents capacitor discharge after a flame is established. A field effect transistor (FET) switch prevents the thermopile-controlled gas valve from opening unless there is a pilot flame.

Figure 12 is a schematic of a gas valve which was designed and built to be used with the IID. The valve incorporates a delay mechanism to shut

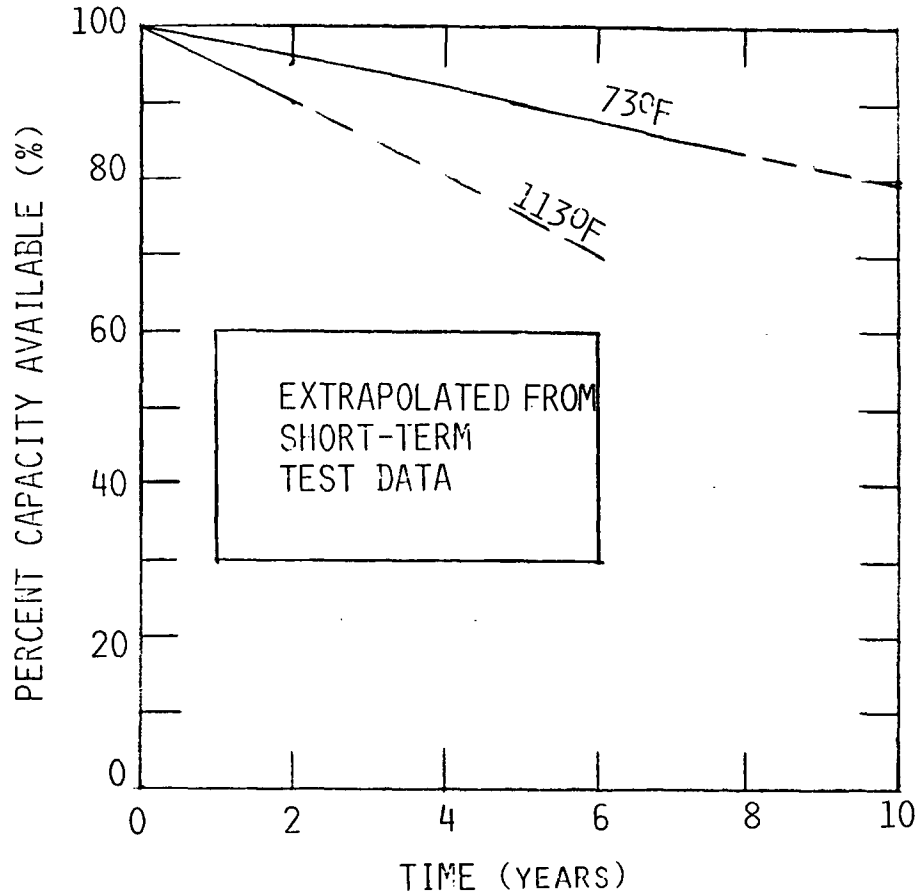

Figure 10. - SELF-DISCHARGE CHARACTERISTICS OF LITHIUM BATTERIES

AMTI

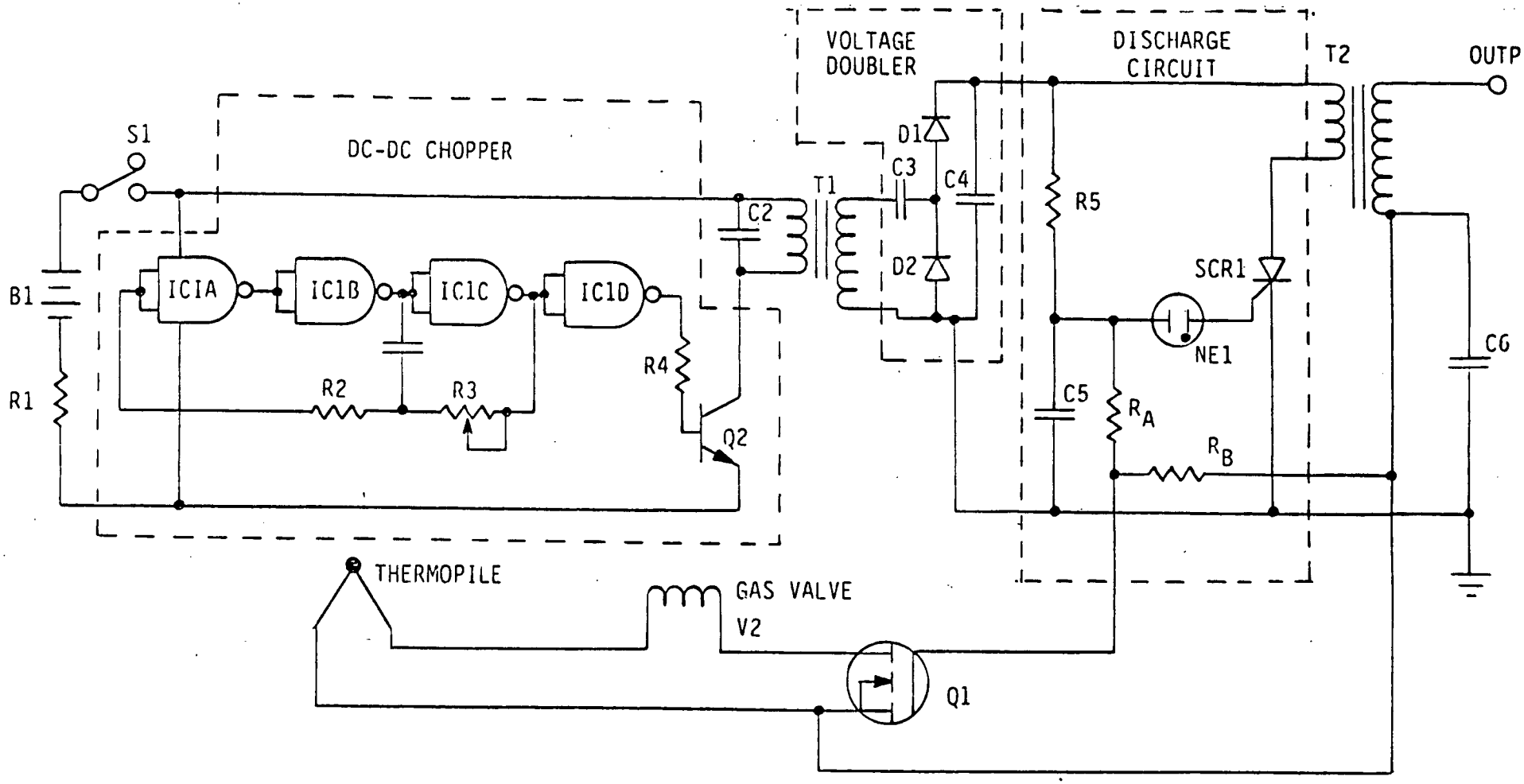

Figure 11. - BATTERY IID CIRCUIT

AMTI

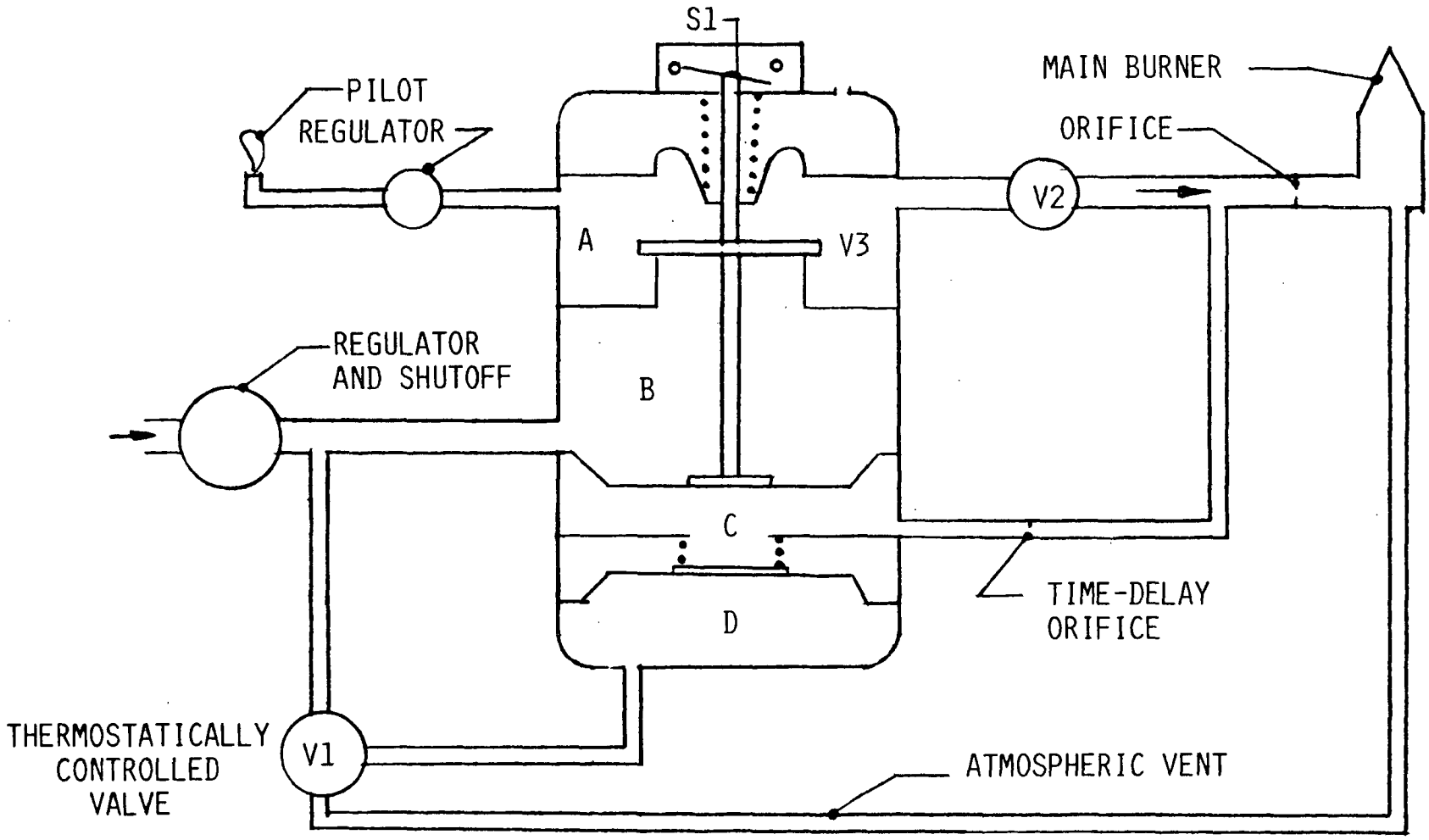

Figure 12. - IID GAS VALVE SYSTEM

off all gas flow in the event of ignition failure after a suitable trial for ignition period.

Gas-valve operation is as follows: Initially chambers A, C, and D are at atmospheric pressure and chamber B is at gas pressure. Valves V2 and V3 are closed with valve V1 venting chamber D to atmosphere. Upon call for heat, the thermostatic valve V1 opens and connects chamber D to gas pressure. Chamber C almost instantly gets pressurized to gas pressure due to pressure exerted on diaphragm from chamber D. Since chambers B and C are at gas pressure and chamber A is at atmospheric pressure, valve V3 opens due to this pressure difference across it which exerts a greater force than the spring at the top of the valve spool. When valve V3 opens, gas enters the pilot and is now present at the main burner valve V2. Now, pressure in chamber A keeps the valve V3 open by acting on the diaphragm at the top of chamber A which is connected to the stem of valve V3. Gas pressure from chamber C also bleeds out through a time-delay orifice to shut off pilot flow by lowering valve V3 if main burner operation does not occur within 1.5 minutes.

Switch S1 is also turned on when valve V3 opens, activating the IID circuit. Pilot gas can now be ignited. Normally, the ignited pilot heats the thermopile, activating V2, admitting gas to the burner. No more gas flows through the time-delay orifice and V3 remains open.

After the system was tested and refined, it was decided that the ignition circuit had to remain in an idle (but non-sparking) condition for the burner operating time. This idle requirement was necessary for a flame safety feature. This added an additional 17.3 watt-hours to the battery storage requirement, making the total necessary storage 19.0 watt-hours. This additional power resulted in the requirement of a 3-volt "D"-size battery cell with a 36.7 watt-hour capacity.

A photograph of the ignition circuit is shown in Figure 13.

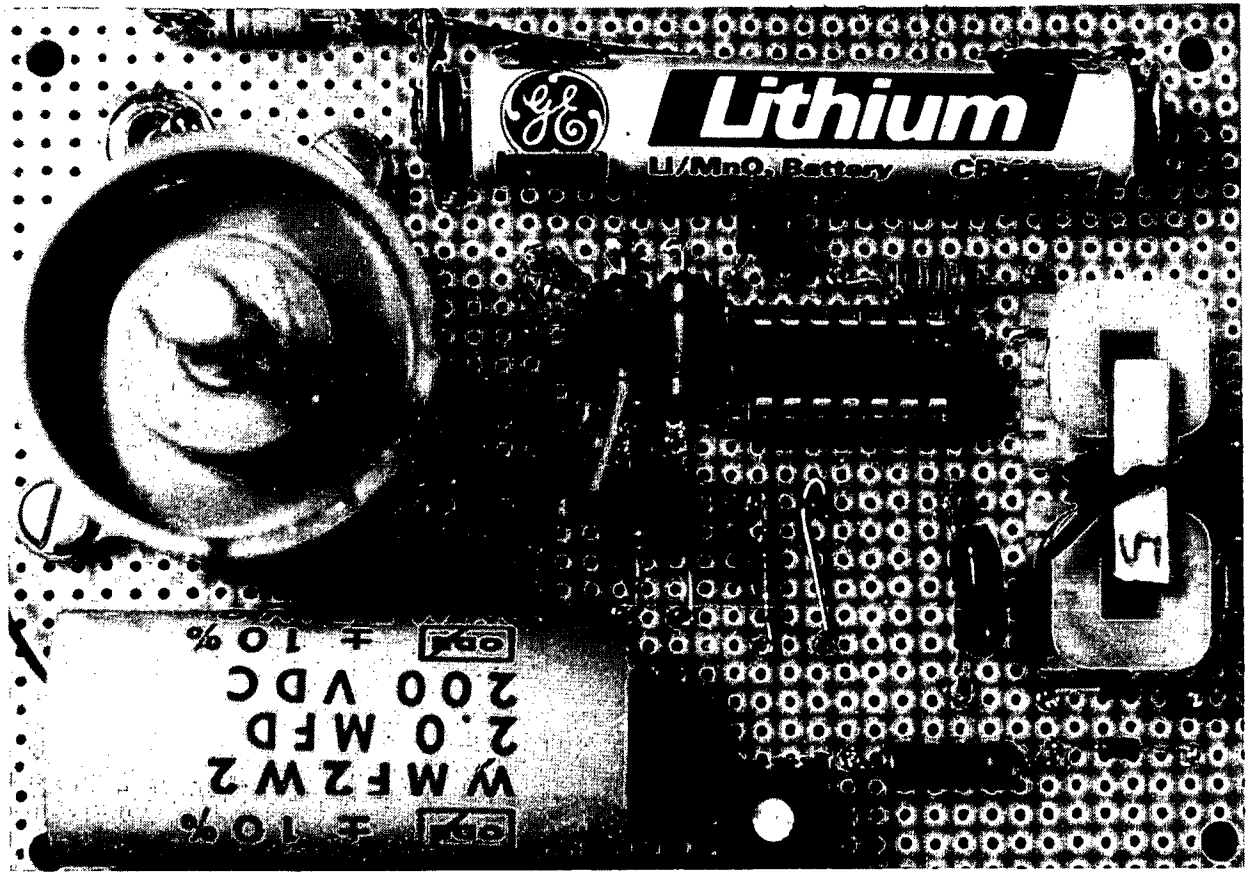

Figure 13. - PHOTOGRAPH OF IID CIRCUIT

2.2 Heat Exchanger

The heat exchanger used in the Phase I prototype is shown in Figure 14. The heat exchanger consisted of 21 vertical, integral-finned copper tubes with 7/8-inch OD fins at a spacing of 11 fpi. While the basic style of the heat exchanger did not change in Phase II, that is, the design features which affected performance were not changed, a great deal of work was performed on the header design and on fabrication techniques.

The manufacturing analysis of the water heater indicated the need for a redesign of the headers to improve the manufacturability of the heat exchanger and decrease its cost. The heat exchanger shown in Figure 14 required excessive fabrication of tube fittings, especially for the downcomer and riser. After several conceptual design iterations, the heat exchanger concept shown in Figure 15 evolved.

This design retained the 21 vertical-finned tubes as the primary heat exchange surface, however, several new features were included in this design. First, the tubes were located on a 7-inch rather than a 6-inch circle to accommodate the Phase II gas pilot described in Section 2.1. This allows access of the pilot from the side of the heat exchanger without major disassembly. The space was provided by placing the pilot in the position the "22nd" tube would take on the 7-inch circle.

The uniqueness of this design was the use of shapes capable of being manufactured by stamping. The bottom header was formed by using two parts. Functionally, the bottom header directed the water from the downcomer into the finned tubes. The top header and riser was formed with three separate sections. It directed water from the bottom of the tank into the downcomers and also collected heated water from the finned tubes and directed this water into the tank.

While this heat exchanger had several good design features, an examination of the heat exchanger following testing indicated yielding of the upper tubesheet near its outer radius, with related bending of the downcomer tubes.

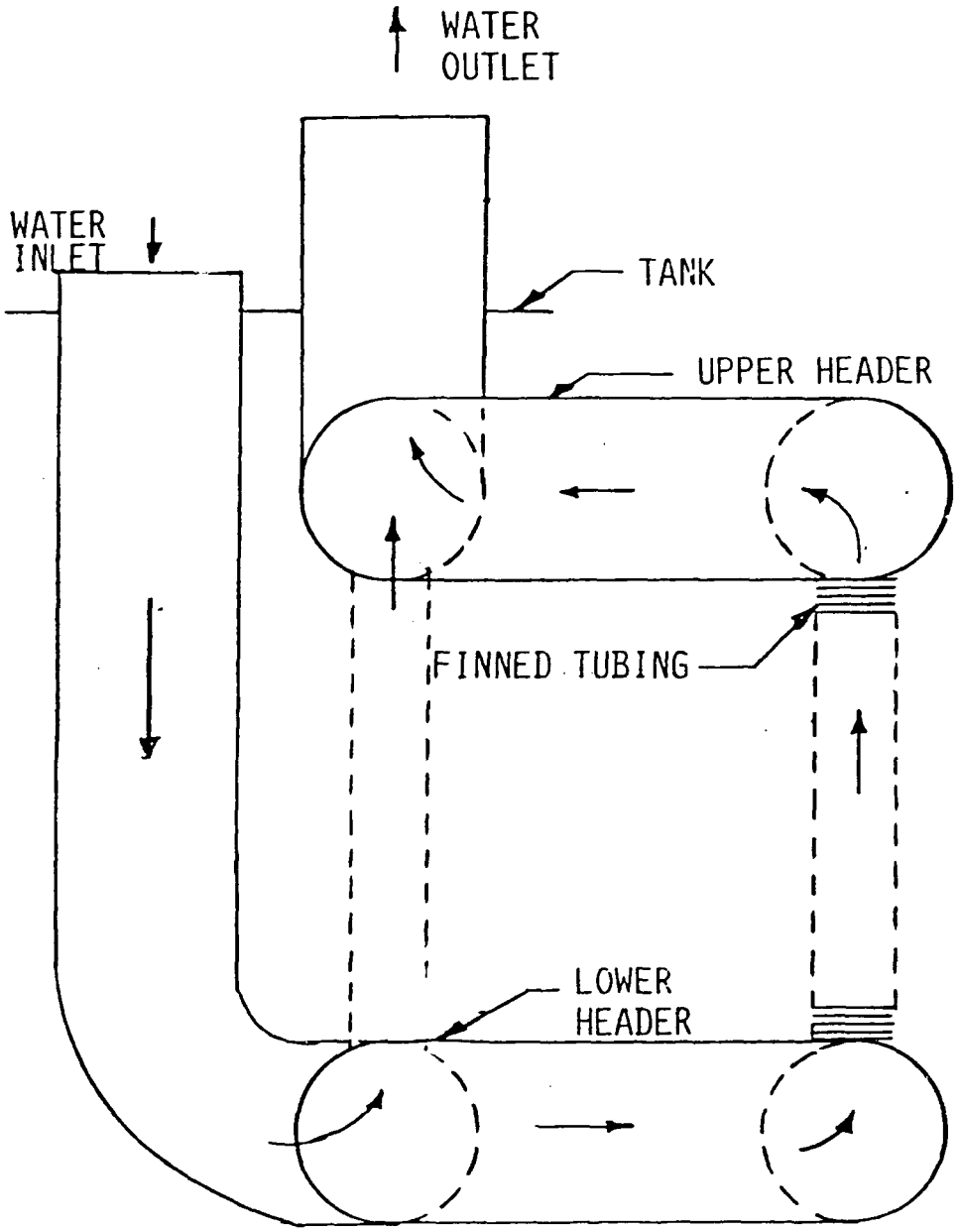

Figure 14. - MK I PROTOTYPE HEAT EXCHANGER DESIGN

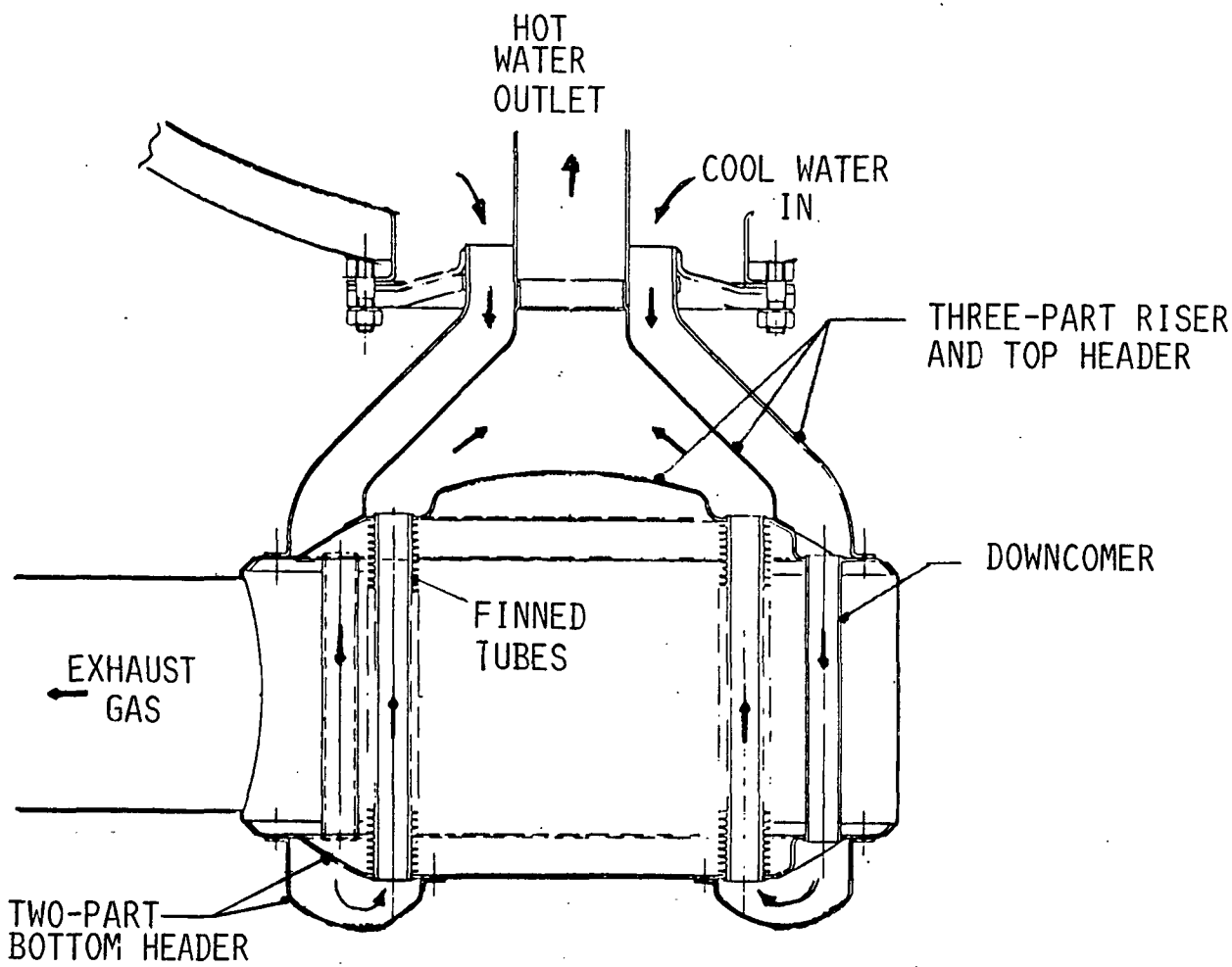

Figure 15. - MK II PROTOTYPE HEAT EXCHANGER

Figure 16 shows this failure mode. The heat exchanger was instrumented with strain gages, and the unit was hydrostatically tested to determine the stresses and strains experimentally. Evaluation of the experimental data and subsequent analysis indicated that the heater tubes were constraining the lower header. When combined with moderate pressure loading of the upper tubesheet, this produced high bending stresses of the downcomer tubes and also near the outer radius of the upper tubesheet. Reduction of the tube and tubesheet stresses necessitated redesign of the upper tubesheet and downcomer tube layout.

An intensive design effort was mounted in order to eliminate the high stresses in the design shown in Figure 15. Several alternate designs were developed, however two basic concepts evolved. One concept was modeled after that in Figure 15 with a reinforced tubesheet design which would have to be forged or cast. The second was modeled after the MK I heat exchanger but could be made from stampings and would not require extensive fabrication techniques. Meetings were held with AMTROL and the latter design, shown in Figure 17, was selected. The main differences between this MK III design (also used in the MK IV assembly) and the initial MK I design were in construction details and not in performance-related areas.

The MK III design had the same 21 finned tubes but configured as in the MK II so that the pilot could be mounted through the side. Details of the heat exchanger are shown in Table 2. The heat exchanger had 2-inch upper and lower copper headers and the downcomer was made with 1.9-inch tubing which passed through the upper header as shown in Figure 17. In addition to eliminating the cumbersome attachment method used in the MK I design for the downcomer, the MK III heat exchanger design allowed the use of a single sheet which wrapped around the heat exchanger forming the exhaust shroud. Standoffs (shown in Figure 17) space the exhaust shroud the proper amount to avoid adding excessive pressure drop in the exhaust system.

Table 3 compares the performance of the MK I and MK III heat exchanger at three different water inlet temperatures. For equal heat input the water flow rates and temperatures were fairly close. The MK III was designed for a slightly higher exhaust temperatures (lower efficiency) to avoid excessive condensation related corrosion problems associated with exhaust temperatures below 300°F.

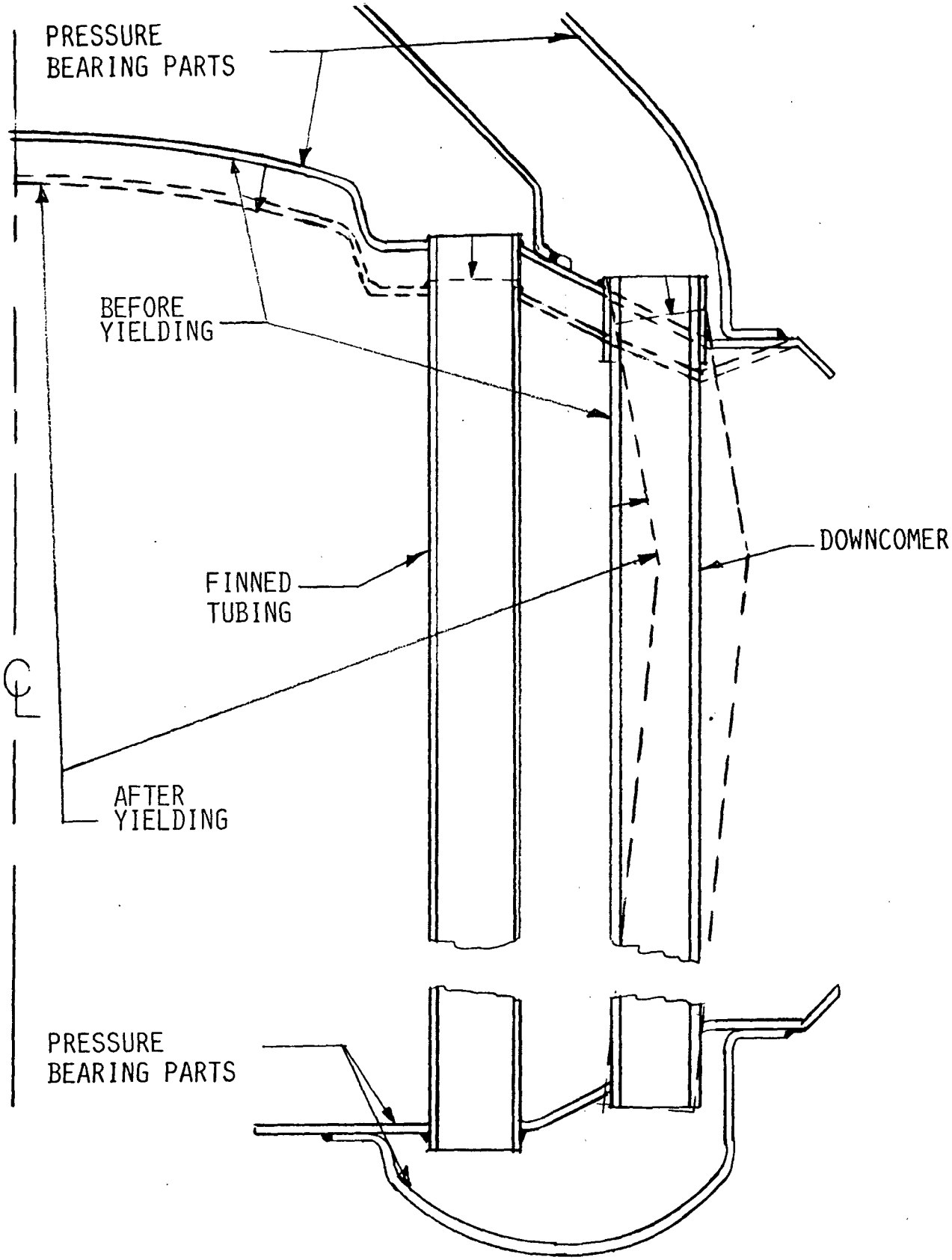

Figure 16. - OBSERVED DEFORMATION IN MK II PROTOTYPE HEAT EXCHANGER

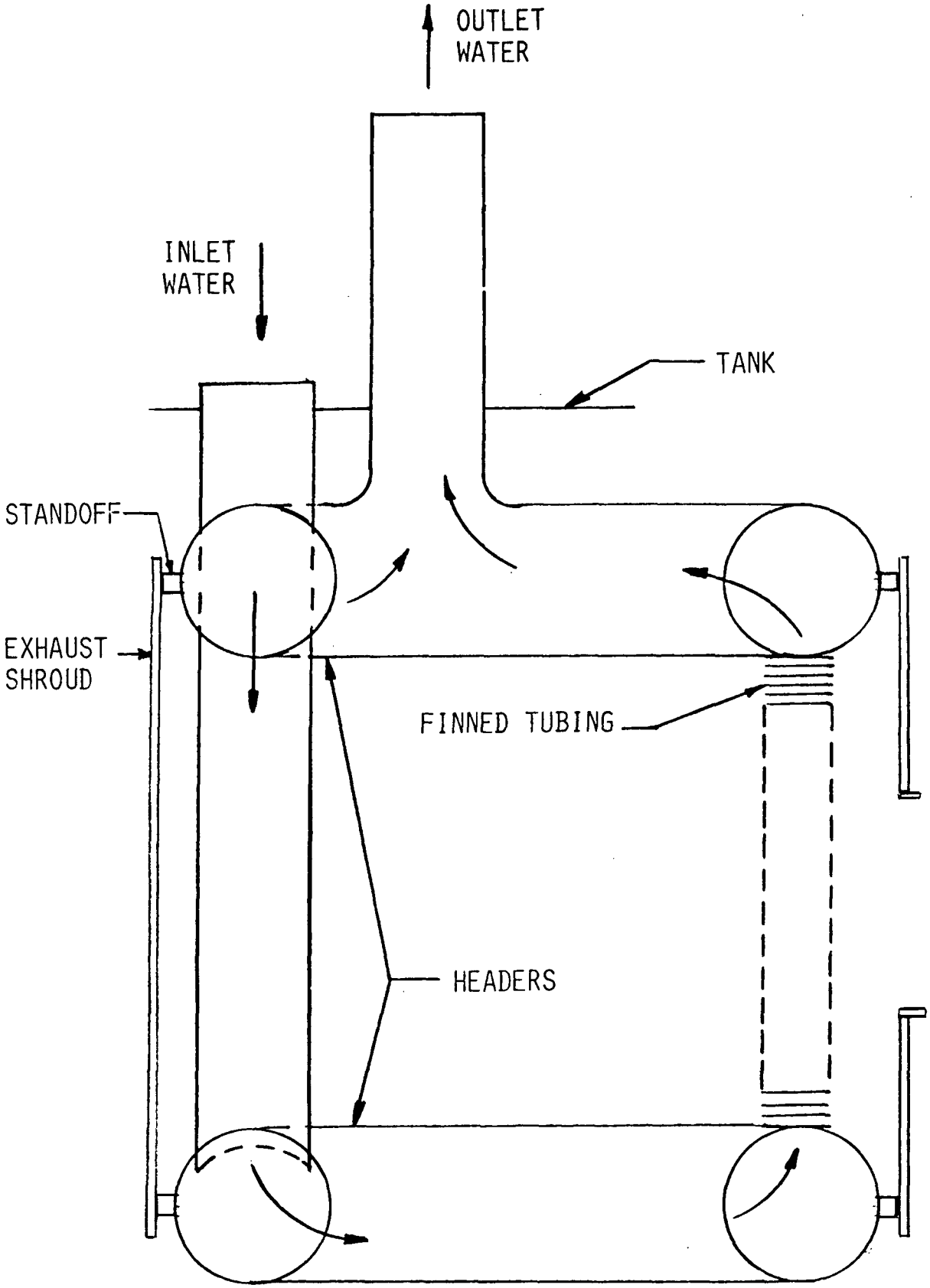

Figure 17. MK III AND MK IV HEAT EXCHANGER

Table 2.

MK III AND MK IV HEAT EXCHANGER DESIGN DETAILS

- Tubing -- 21 six-inch lengths of copper integral-finned tubing

Tube O.D.	-	0.625 in.
Wall Thickness	-	0.032 in.
Fin Pitch	-	11 fins/in.
Fin O.D.	-	0.875 in.
Fin Height	-	0.125 in.
Heat Transfer Area	-	7.4 ft^2

- Header Diameter -- 2 inch I.D. copper tubing

- Risers -- 1.5 inch I.D. copper tubing

- Downcomer -- 1.78 inch I.D. copper tubing

- Configuration -- crossflow, finned tubes vertically mounted on a 7-inch pitch circle

Table 3.

COMPARISON OF MK I VS MK III AND MK IV HEAT EXCHANGER PERFORMANCE

	MK I Heat Exchanger			MK III and MK IV Heat Exchanger		
Firing Rate	42,000 Btu/hr			41,100 Btu/hr		
Water Inlet Temperature (°F)	68	100	139	67	104	140
Water Outlet Temperature (°F)	104	129	170	101	133	168
Exhaust Temperature (°F)	222	241	256	291	304	314
Combustion Efficiency (%)	87	87	86	86	86	85
Water Flow (lb/hr)	990	1250	1170	967	1133	1174

While several different heat exchangers were designed and tested, the MK III version was the preferred approach and was used in the final Phase II testing. It was the best solution available to a cost-effective design that also retained the high performance standards for the project.

2.3 Tank Design

The tank tested in Phase I was a hand-built prototype made at AMTROL. The construction of this tank is shown in Figure 18. The tank consisted of an internal polyethylene liner, having a 40-gallon volume, which was enclosed by 3/4-inch thick polyurethane insulation. A steel outer shell formed the exterior skin and provided the strength for containing the pressure. As can be seen in Figure 18, the tank had two penetrations at the top for the pressure relief valve and hot water outlet and two at the bottom for the cold water inlet and the thermostat. A 6-inch flanged hole at the tank bottom was used for mounting the heat exchanger.

The first tank tested (MK II) in Phase II was essentially the same configuration as the Phase I prototype (MK I) but was a manufactured tank made on AMTROL's production line. While the tanks had a similar construction, the losses from the MK II tank were higher than those in the MK I tank. The differences in standby losses between these two tanks were attributed to changes made in the production process. Section 3 describes the standby loss for these two tanks as well as the others described in this section. The standby losses include tank, heat exchanger, and pilot losses. The differences in standby losses among tanks were primarily due to tank heat losses.

Next in the evolution of AMTROL's production tank design (MK III) involved the elimination of three of the four tank fittings. This tank is shown in Figure 19. This new tank with one fitting decreased standby losses by 8.6% and increased reliability.

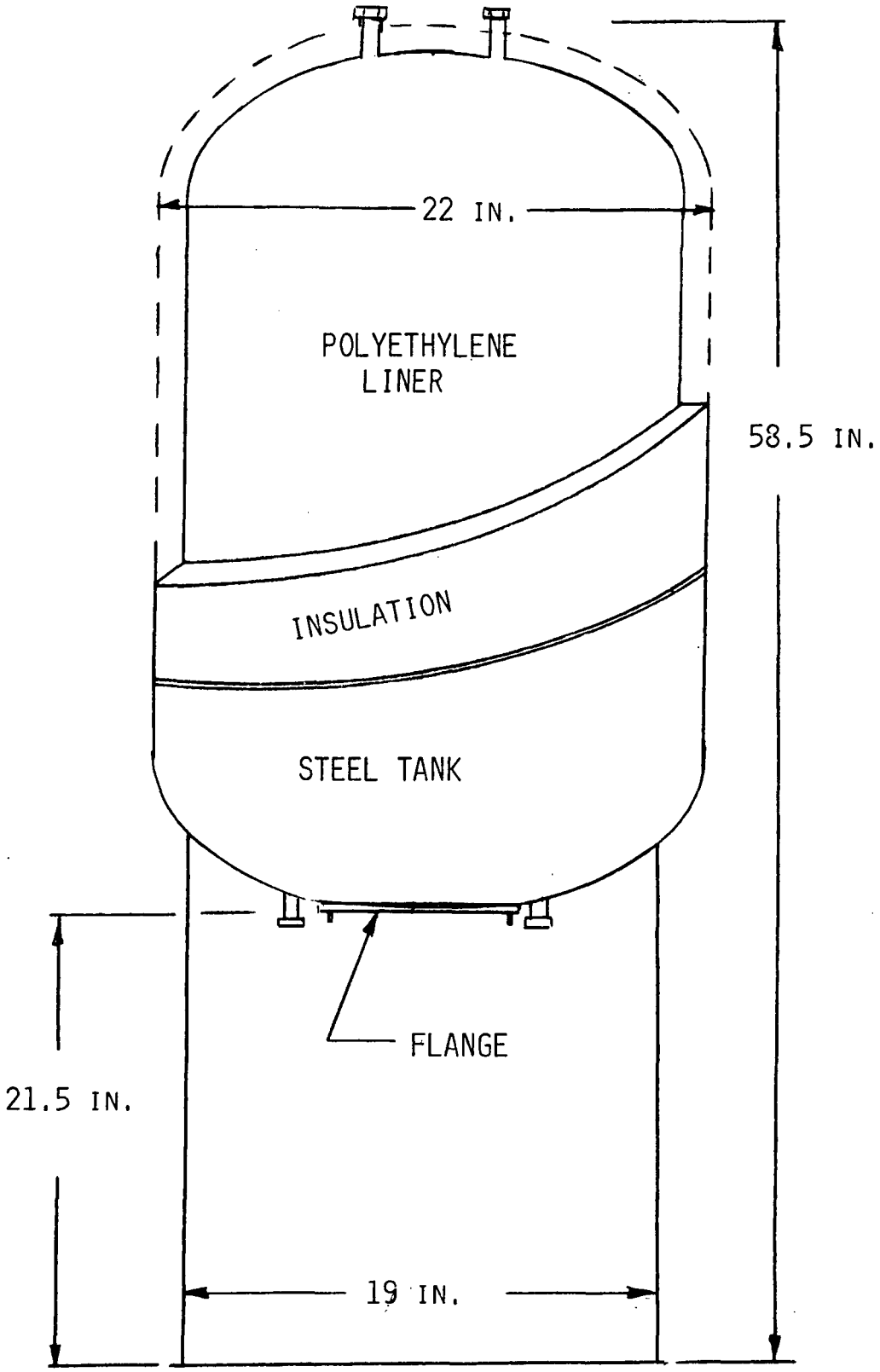

Figure 18. - MK I PROTOTYPE TANK

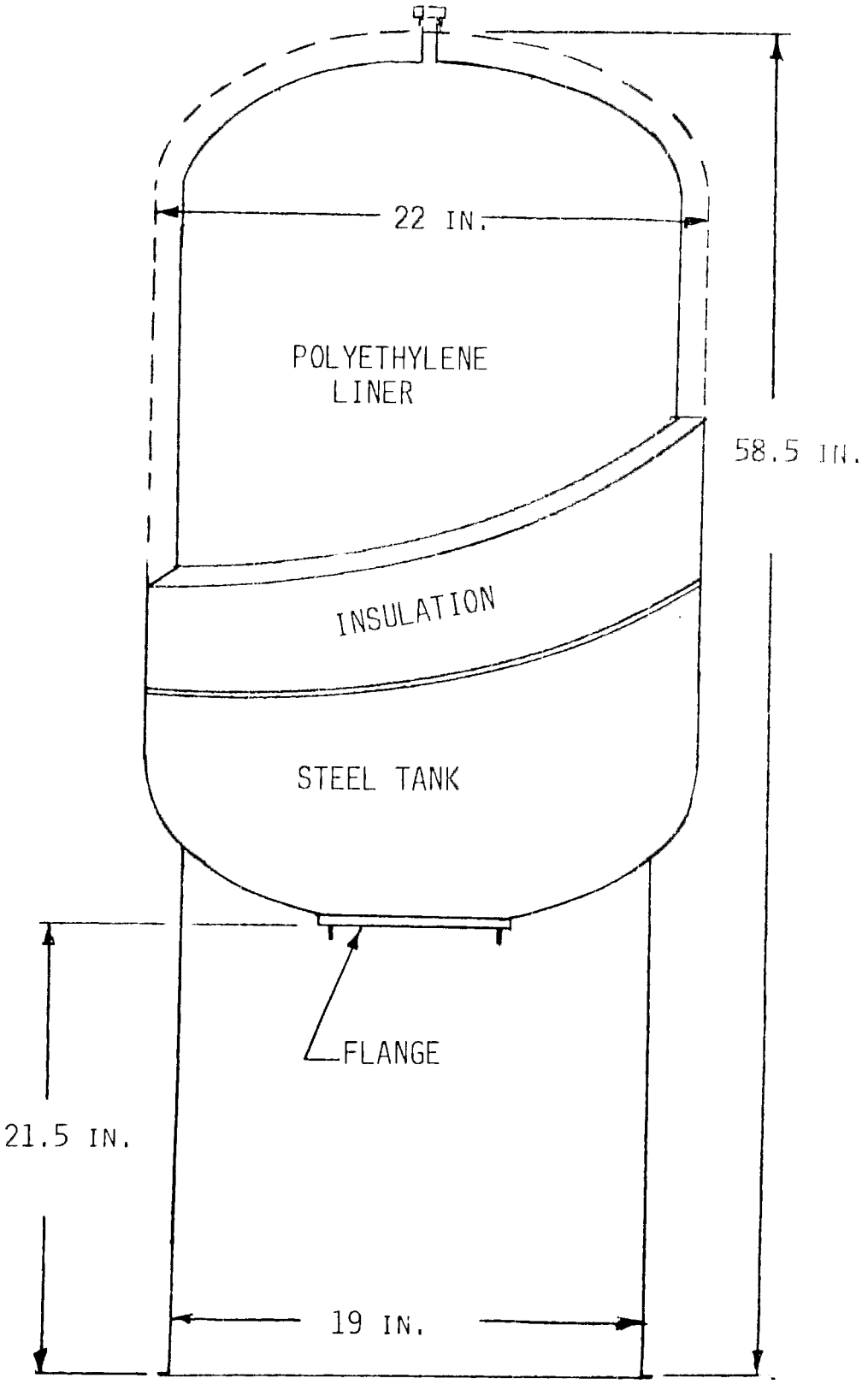

Figure 19. - MK III PROTOTYPE TANK

At this stage the tank development was redirected. It was felt that within the limitations of AMTROL's current production process, the tank heat loss had been reduced as far as it could. A new approach to substantially lower the tank losses was needed to meet the project goal of 1.9%/hr standby losses. The concept selected was a 40-gallon tank with an internal polyethylene liner and 2 inches of external foam insulation having a thermal conductivity of 0.012 Btu/hr-ft-^{o}F. Table 4 shows the predicted and actual standby losses for this MK IV tank. The predicted heat loss for the tank without any heat exchanger attached was 0.6%/hr, or 160 Btu/hr. The measured value was 0.7%/hr. The predicted standby loss with a recovery efficiency of 81% and a 275 Btu/hr pilot (with a 30% recovery efficiency) was 1.8%/hr, while the measured value was 2.2%/hr. The predicted loss with an 81% recovery efficiency and an IID was 1.2%/hr, while the measured loss was 1.55%/hr. This last result was well below the project goal.

It is felt that the difference between the predicted and measured values was due primarily to skirt heat losses. In the original predictions the skirt loss was ignored, while it could not be ignored in the actual tests. Initially, the skirt was insulated both internally and externally for the standby loss testing. Eventually the skirt was attached to the tank with four 1-inch standoffs that served to thermally isolate the skirt from the tank. Figure 20 shows the design of these standoffs. The results with the standoffs were identical to those taken with the skirt well-insulated.

The final configuration (MK IV) tested in Phase II was the tank shown in Figure 21. The tank used the same steel shell used in previous (MK I - MK III) tank designs but with 4" cut from the length to achieve a 40-gallon storage capacity. A polyethylene liner was rotationally molded inside of the tank and 2 inches of foam insulation was installed externally.

The liner was molded using a process in which the tank is loaded with 12 pounds of polyethylene and subjected to a bi-axial rotation while being heated. At the end of the heat cycle the tank was allowed to cool and was unloaded. Two separate attempts were made to install a liner in the tank. In the first attempt two tanks were tried. Most of the liner appeared

Table 4.

MK IV STANDBY LOSSES

Configuration	Predicted Standby Loss (%/hr)	Actual Standby Loss (%/hr)
1. MK IV Tank with No Heat Exchanger or Fittings	0.6	0.7
2. MK IV Tank with Standing Gas Pilot	1.8	2.2
3. MK IV Tank with Battery IID	1.2	1.55

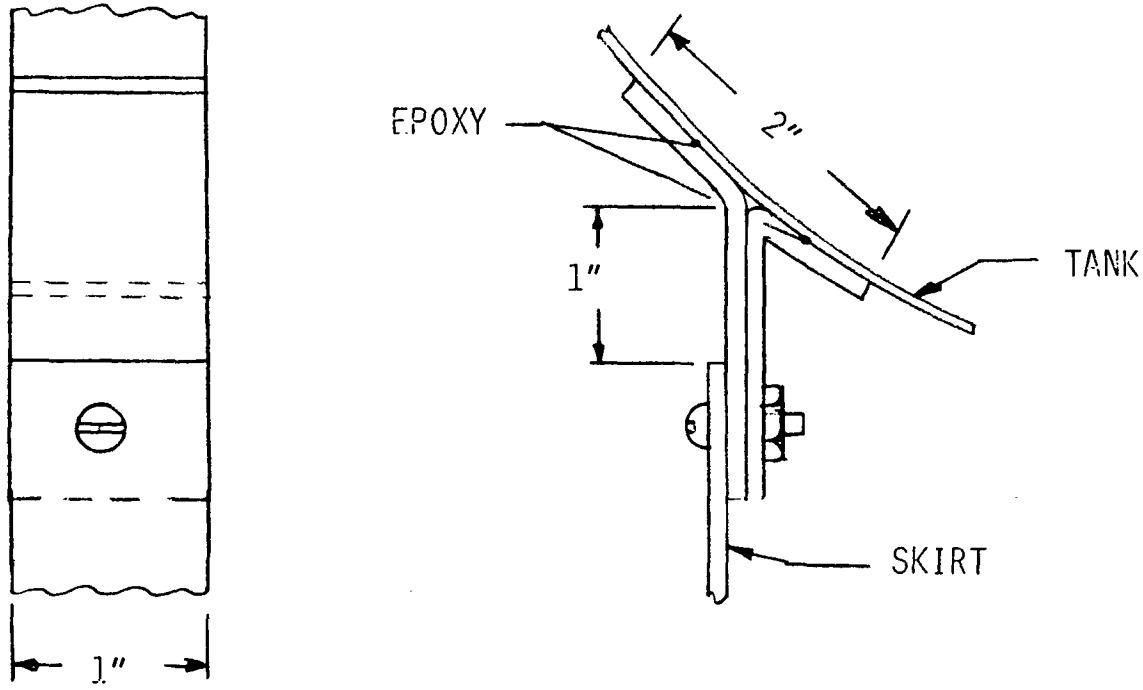

Figure 20. - TANK STAND-OFFS FOR THERMAL ISOLATION

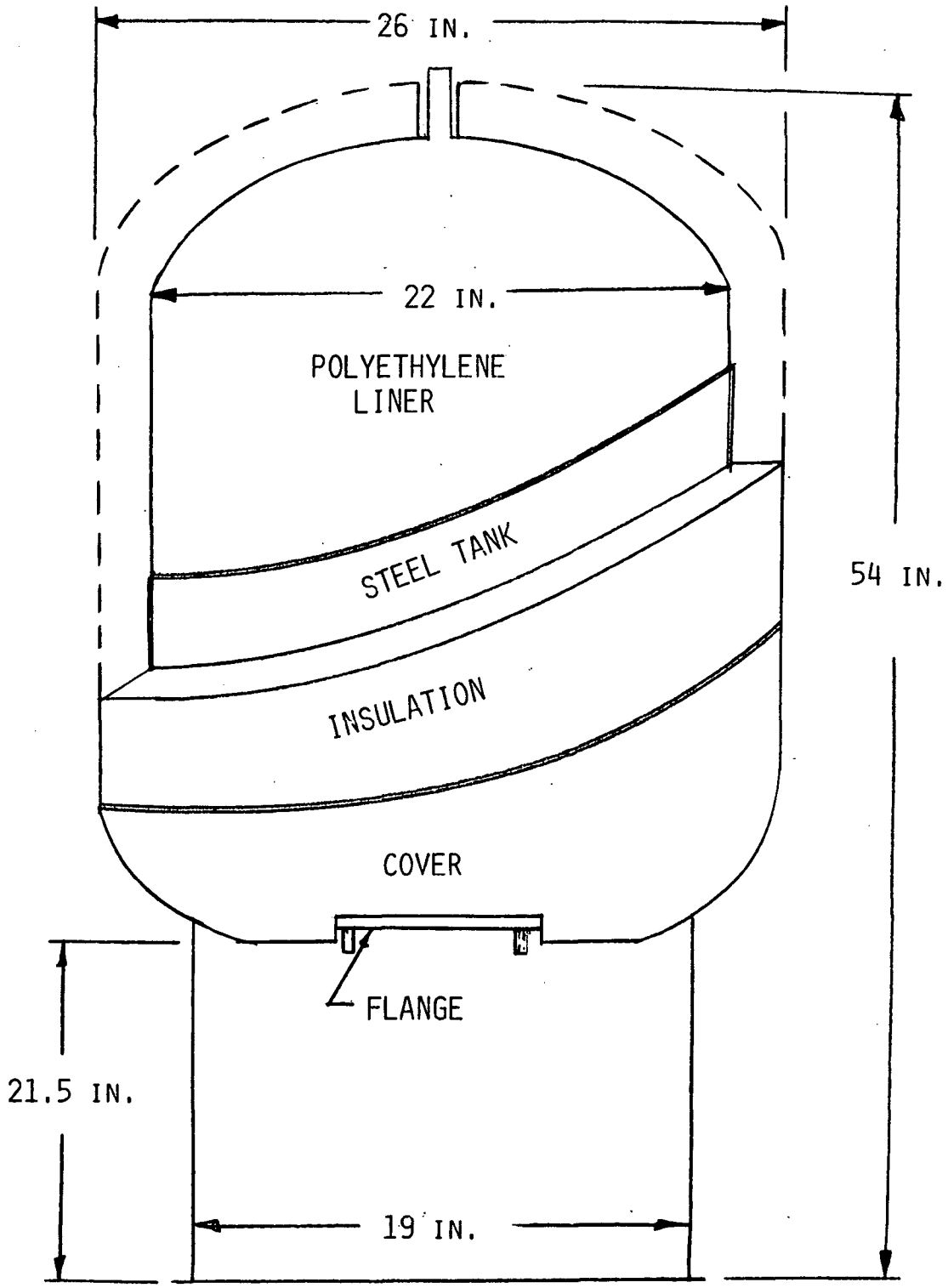

Figure 21. - MK IV PROTOTYPE TANK

sound, but the area around the bottom flange had thinned out. Also the liner exhibited defects near seams and transitions.

A second attempt at producing a lined tank was much more successful. Only one small defect 1/8" in diameter was found near the seams between tank halves. This was touched-up and the tank placed in service. The second attempt was more successful than the first because of the changes made to the molding technique. All transition zones or seams were treated with a silicon film before starting and the skirt was not attached to the bottom of the tank during the second attempt. This latter change allowed a better penetration of heat near the flange area so that the liner was as thick near the flange as it was throughout the tank.

2.4 Exhaust System/Stack Development

Three separate exhaust systems, shown in Figure 22, were tried with the natural-draft water heater. These were: a standard flue which used a draft diverter; a concentrically-configured sealed combustion system; and a concentric system with a draft diverter. As described previously, both concentric systems did not operate properly above 30,000 Btu/hr and were shelved for further development pending an evaluation of the energy effectiveness of sealed combustion (Ref. 2).

The evaluation of sealed combustion was performed by measuring the exfiltration flow in the water heater for the different venting schemes and calculating the potential energy penalties for each system.

In order to determine the magnitude of exfiltration losses associated with the prototype water heater, a study was completed to determine air flow through the unit in the standby mode. A tracer gas (CO_2) of known concentration and flow rate was injected into the exhaust stack. By measuring CO_2 content with and without tracer flow, the actual air flow through the unit could be determined. In addition, using the tracer gas technique, air flow was determined in the exhaust flue downstream from the draft diverter. In each configuration the unit was tested with a hot and cold heat exchanger. Table 5 shows the average total flow rates for the three exhaust systems tested both during burner-on and burner-off periods.

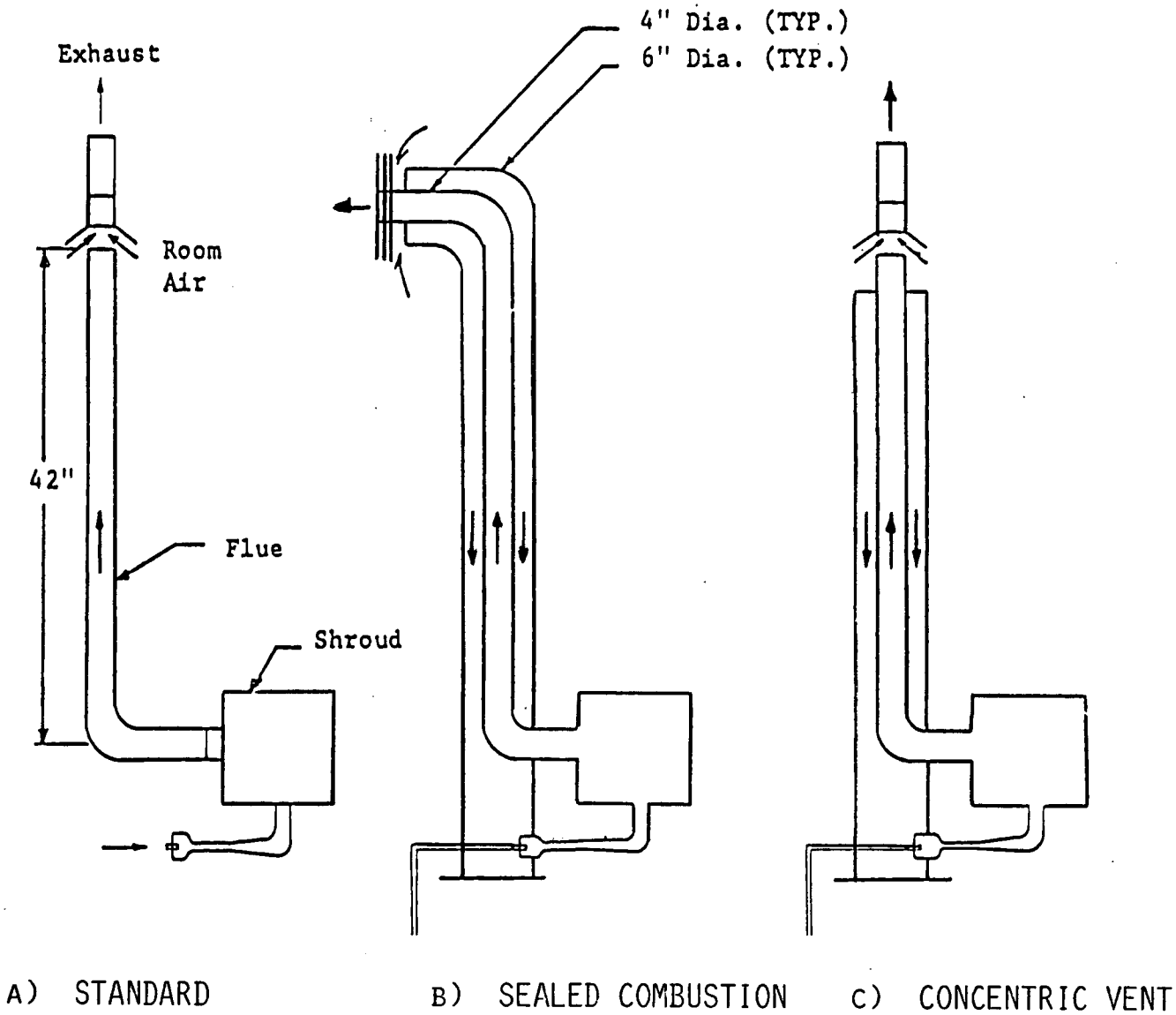

Figure 22. - EXHAUST SYSTEMS

AMTI

Table 5.

SEALED COMBUSTION EVALUATION

	Conventional Vent	Sealed Combustion	Concentric Vent
1. Air Flow			
Burner On	1120 CFH	560 CFH	1120 CFH
Burner Off	777 CFH	110 CFH	560 CFH
2. Total Daily Heat* Loss (Btu/day)	7962	0	5960
3. Assumed Savings of 40% (Ref. 7)	3184	0	2384
4. Percent of Total Heat Loss for Project Water Heater	4%	0	3%
5. Percent of Total Heat Loss for Conventional Water Heater	2.8%	0	2.1%

* Based on average 23°F differential between conditioned and outdoor air

The total air flow through the units (based on a 1.7-hour burner on-time and 22.3-hour off-time) is 19,231 cubic feet/day, 14,392 cubic feet/day, and 3,405 cubic feet/day for the conventional, concentric, and sealed combustion vent, respectively. Based on an average outdoor temperature of 42°F (Ref. 8) and an indoor temperature of 65°F, the total potential heat loss is 7,962 Btu/day for a conventional vent and 5,960 Btu/day for a concentric vent. Of course, since the sealed combustion unit uses outdoor air for combustion, any air flow through the unit does not represent a conditioned air loss.

The total potential savings, however, are not fully realized because closing one vent causes higher exfiltration elsewhere. If a conditioned space has only one source of exfiltration loss and this is eliminated, then 100% of the heat loss is obtained. In most residences, however, there are many places where infiltration/exfiltration occurs (windows, doors, etc.). Sealing one leak does not decrease the total leakage by that amount. It has been reported that only 30% to 50% of the loss is eliminated because increased exfiltration occurs elsewhere (Ref. 7). If it is assumed that 40% of the total potential loss is eliminated, then the actual savings become 4% based on the project water heater efficiency or 2.8% based on the efficiency of a conventional unit.

Based on the original Phase I costs ($57), the sealed combustion system would have a 9.8-year payback for a daily energy saving of 3,180 Btu. It was felt that this savings was not sufficient to justify the development of the sealed combustion unit. This analysis assumed a 23°F temperature difference year-round. If air conditioning is not included then it would be 80% of this value. If the water heater were located in the basement or some other cold location, the savings would be even less. Based on this analysis, the development of sealed combustion was delayed in lieu of the development of more cost-effective development features and the exhaust system shown in Figure 22(a) was selected for use in Phase II.

3.0 WATER HEATER SYSTEM EFFICIENCY TESTS

As is evident from the component descriptions of Section 2, a great deal of development hardware was built and tested during this project. In order to avoid confusion, the four major assemblies tested are reviewed in Section 3.1 before energy test results for the units are reported in succeeding sections.

3.1 Water Heater Assemblies

The first assembly described is the MK I prototype shown in Figure 2. This had the large aspirator of Phase I, the copper heat exchanger with an external downcomer, and a prototype tank with four fittings.

The second assembly is designated as the MK II and is shown in Figure 23. This assembly had the compact combustion system shown in Figure 5, the heat exchanger with stamped stainless steel headers, a production tank with four fittings, and a gas pilot side-mounted through the heat exchanger. The MK III or third assembly is shown in Figure 24. This water heater had the same combustion system as that in the MK II assembly; however, it had a new production tank with a single fitting and a heat exchanger with the downcomer incorporated in the header design as shown in Figure 17. The major difference between the MK III and MK IV water heater assemblies was the tank design and ignition system. The fourth and final assembly (MK IV) for the Phase II portion of the project is shown in Figure 25. The MK IV assembly included a 40-gallon steel tank (Figure 21) with a rotationally-molded polyethylene liner and two inches of low density foam insulation. The all-copper heat exchanger of Figure 17 was also used with the MK IV assembly. The burner, shown in Figure 5, consisted of a cylindrical stainless steel flameholder mounted on top of a short steel mixer/diffuser. The thermostat used in all the assemblies used a copper bulb filled with a liquid which operated a gas valve when it expanded and contracted. The MK IV assembly was tested with both the standing gas pilot of Figure 9 and the IID system of Figure 12.

3.2 Recovery Efficiency

The recovery efficiency was measured using the DOE test procedure for water heaters (Ref. 6). The test consists of heating a known volume

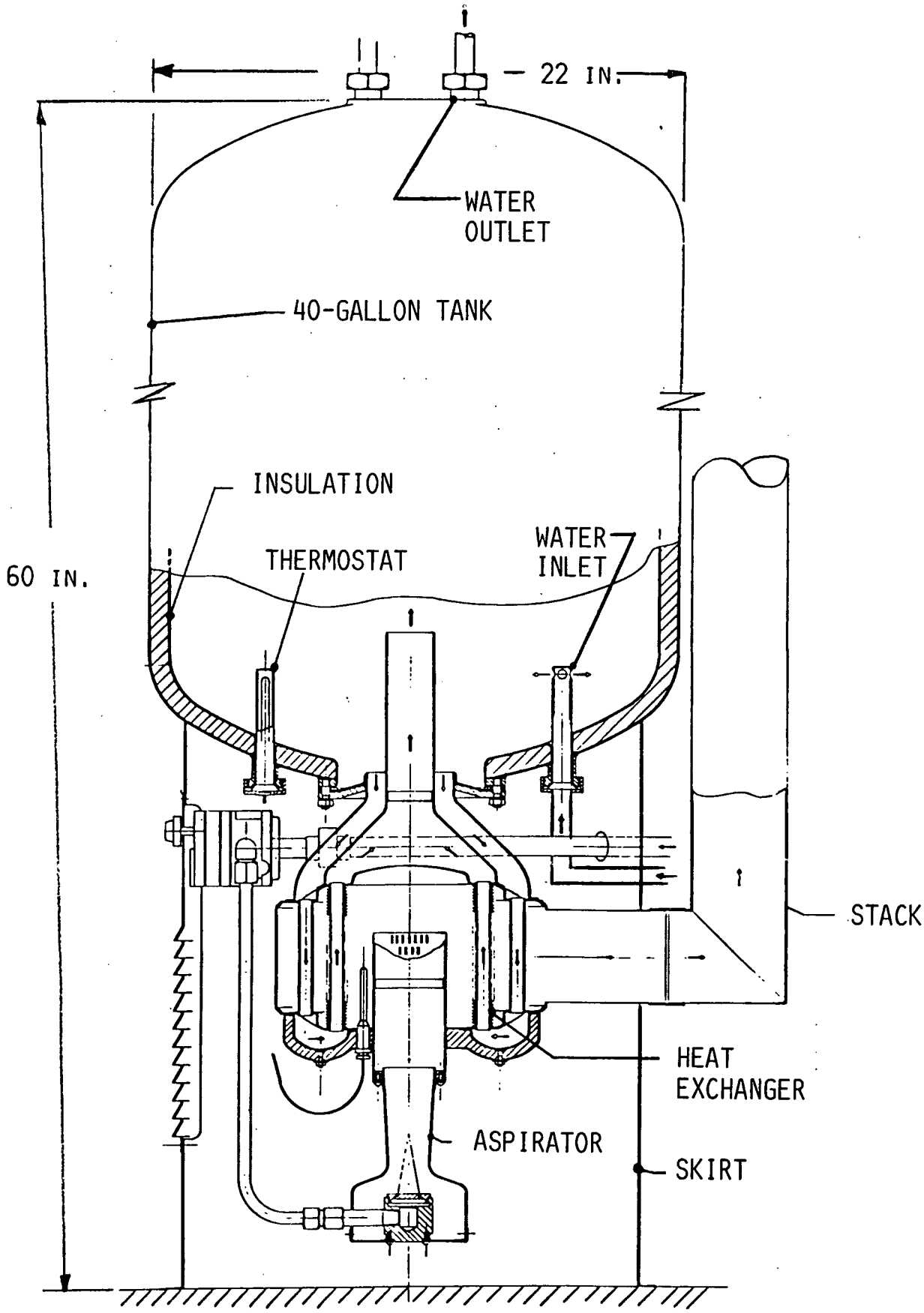

Figure 23. - MK II WATER HEATER ASSEMBLY

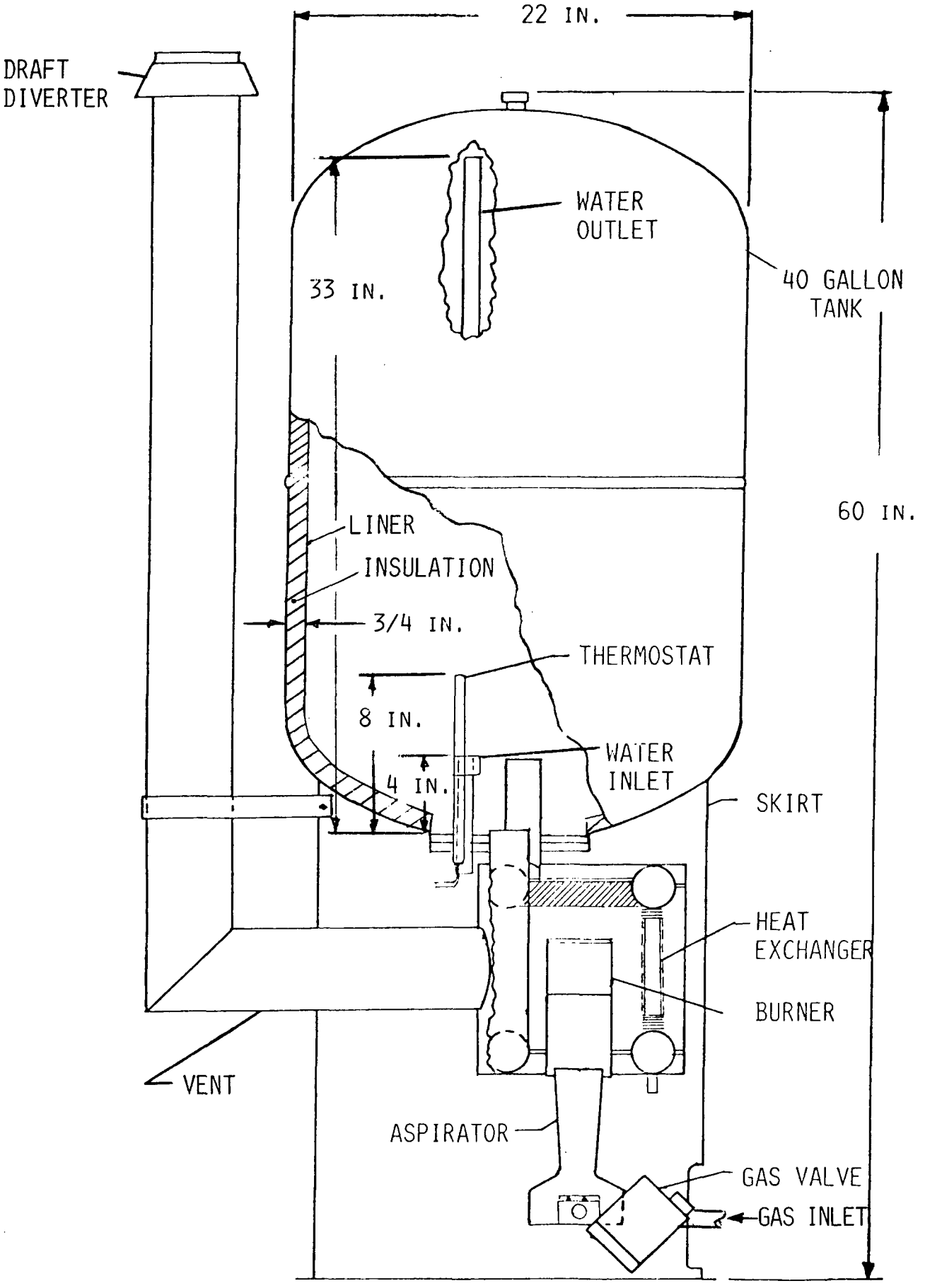

Figure 24. - MK III PROTOTYPE ASSEMBLY

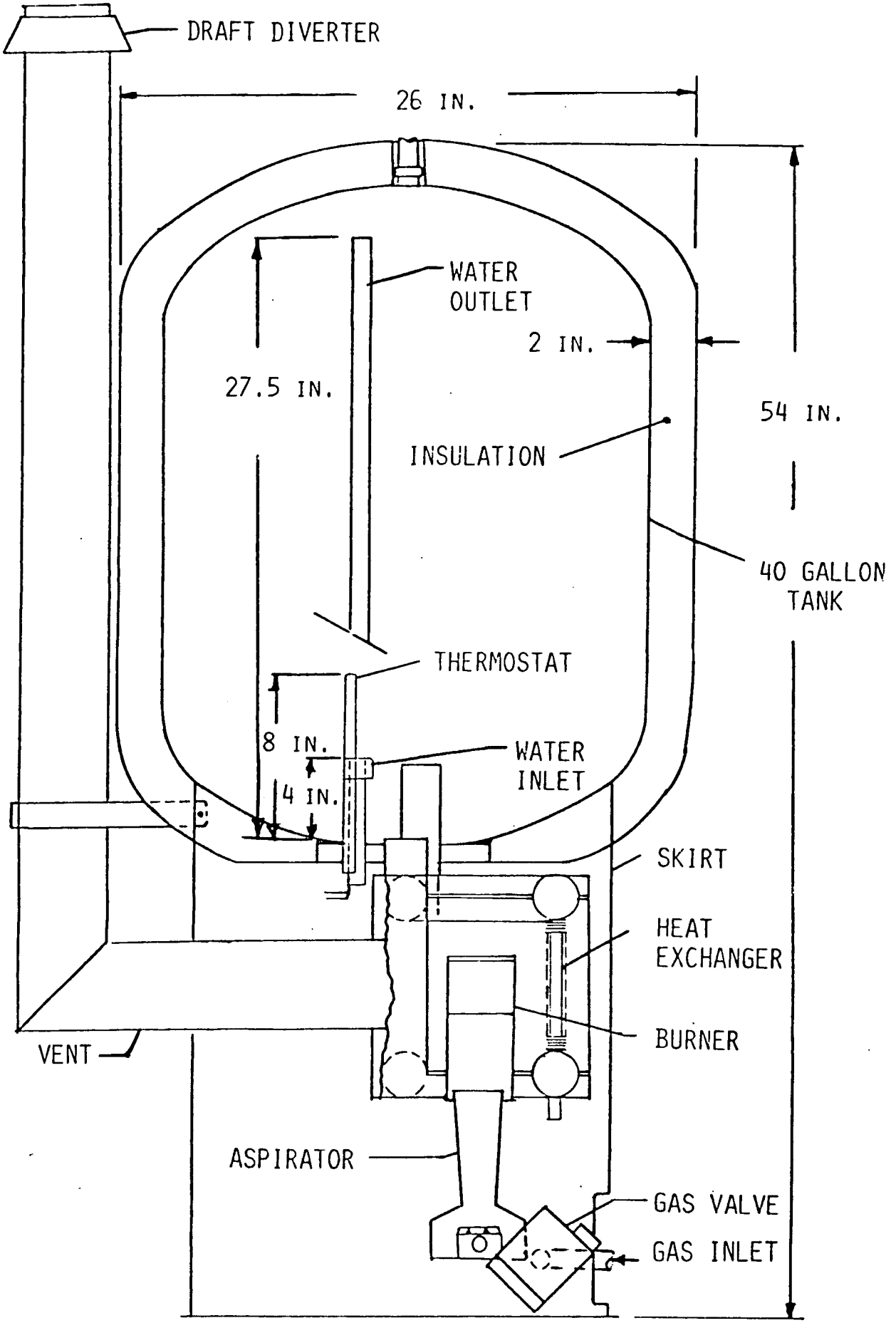

Figure 25. - MK IV PROTOTYPE

AMTI

of water through a 90°F temperature rise while measuring the energy input. The apparatus used to measure the recovery efficiency is shown in Figure 26. The tank volume was determined using a scale with an accuracy of 0.25 lbs. The temperature rise was determined using a thermocouple probe capable of measuring the temperature of six equal subvolumes of the tank. The energy into the heater was determined by measuring the total flow of high purity methane (99.97%) of known heating value using a test meter.

The measured recovery efficiencies for all the different assemblies are shown in Table 6. The MK I prototype had a recovery efficiency of 82%, the highest of all the units. The reason for this was that it had the most effective heat exchanger, as is evidenced by the exhaust temperature in Table 6. The decrease in recovery efficiency of the MK II through MK IV units when compared to the MK I was due to a wider spacing between the finned tubes, thus increasing the exhaust temperature. The slight differences between the MK II and the MK III and MK IV units are due to minor differences in the heat exchanger details. The MK II heat exchanger, shown in Figure 15, had more water-backed surfaces than the other heat exchangers and slightly higher efficiency. The difference between the MK III and MK IV units, which had the same heat exchanger, was due to the repositioning of the burner. Evidence from endurance tests (see Section 4.0) was that the burner in the MK III unit was mounted too high in the unit and was causing a maldistribution in the heat exchanger. This suggested that the heat transfer surface was not being fully utilized. The burner was repositioned and the recovery efficiency of the MK IV assembly increased over that of the MK III.

3.3 Standby Loss

In residential water heating, the most significant loss is the standby loss of the water heater. The water heater spends about 22 hours on standby operation and thus it is critically important that these losses are minimized. The definition of standby loss used here is that specified by the DOE test procedures for water heaters (Ref. 6). A stored volume of water is nominally maintained at 160°F for 48 hours while the energy input is monitored. The measured loss is defined as the rate percent of stored heat lost per gallon of storage above ambient temperature. The facility

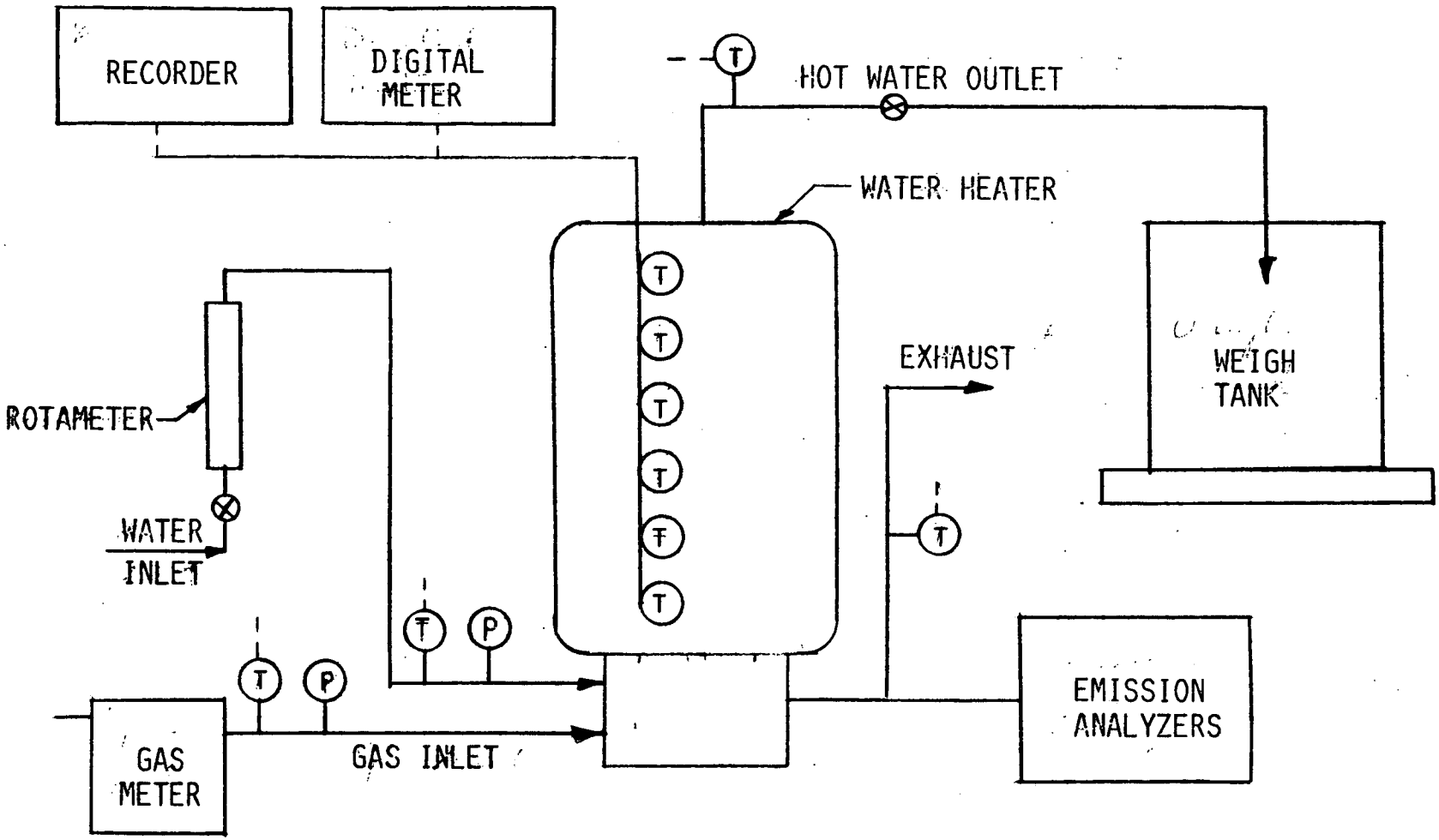

Figure 26. - WATER HEATER TEST FACILITY

AMTI

Table 6.

RECOVERY EFFICIENCY RESULTS FOR DIFFERENT WATER HEATER ASSEMBLIES

Assembly	Firing Rate	Fuel	Average Excess Air (%)	Exhaust Temperature (°F)	Recovery Efficiency (%)	Average Recovery Efficiency (%)
MK I	40,000	Utility	45	260	82.0	82.0
MK II	41,100	Methane	36	330	81.6	81.2
	40,300	Methane	40	338	80.3	
	40,300	Methane	33	340	81.5	
	41,400	Methane	45	320	81.3	
	41,200	Methane	42	315	80.3	
	41,000	Methane	38	330	81.0	
	41,300	Methane	32	320	81.7	
	41,800	Methane	33	330	81.3	
MK III	41,000	Methane	34	335	80.4	80.6
	41,300	Methane	45	325	80.9	
	41,100	Methane	46	315	80.9	
	41,200	Methane	31	320	80.6	
	41,100	Methane	45	316	80.7	
	41,600	Methane	33	313	80.0	
MK IV	39,600	Methane	34	280	81.2	80.9
	39,700	Methane	34	290	80.7	
	39,774	Methane	32	290	81.1	
	41,100	Methane	31	300	80.0	
	41,600	Methane	40	297	80.9	
	41,700	Methane	39	299	81.4	

AMTI

used for performing these tests was the same as shown in Figure 26. A multipoint recorder was used to monitor the stored water and ambient temperatures.

The measured standby losses for all of the water heater assemblies are reported in Table 7. The results shown in the table for the Phase I prototype were 2.7%/hr. The tank used in this prototype was a hand-built model and not from AMTROL's production line. While the tank used in the MK II assembly (Figure 23) was of similar construction to that used in the MK I, the MK II was a production tank. The standby losses for the MK II tank were 3.5%/hr. The reason for the difference between the two tanks could only be attributed to changes in the construction between the early "hand-built" prototype and the production version.

The next configuration in the evolution of the tank was another production version which eliminated three of the four fittings found in the MK II tank reducing its standby losses and improving its reliability. This MK III configuration is shown in Figure 24. The standby losses for this tank decreased about 9% from 3.5 to 3.2%/hr.

As discussed in the section describing tank development, the project goal could not be achieved with the original tank configuration, so a different approach was required. Table 8 shows an analysis of the measured MK III standby loss test results. The tank and fitting losses were 541 Btu/hr and heat exchanger losses were 100 Btu/hr. The loss due to the 80.6% efficiency to make up these losses was 154 Btu/hr. A pilot recovery of 100 Btu/hr out of a total input of 275 Btu/hr resulted in a total pilot loss of 175 Btu/hr. (This pilot loss was consistent for the MK I and MK II units.) Thus, the total loss for the MK III assembly was 970 Btu/hr or 3.2%/hr.

The second column of Table 8 shows the predicted improvement if the tank is constructed with an internal liner of polyethylene, and 2 inches of low density foam (k=0.012 Btu/hr-ft-^{o}F) are added externally (no internal foam is assumed). The tank losses decrease to 186 Btu/hr, while the total loss decreases by about 440 Btu/hr. A standby loss of 1.8%/hr is predicted. The third column shows the predicted effect of replacing

Table 7.

STANDBY LOSS TEST RESULTS FOR DIFFERENT WATER HEATER ASSEMBLIES

Assembly	Ignition System(1)	Gas Type	Average Air Temperature (°F)	Average Water Temperature (°F)	Standby Loss (%/hr)
		Nominal 150°F Thermostat Setting			
MK I	SP	Utility	71	144	2.7
MK I	SP	Utility	72	144	2.7
		Nominal 160°F Thermostat Setting(2)			
MK II	SP	Utility	64	151.5	3.6
MK II	SP	Utility	67	157.7	3.4
MK III	SP	Utility	70	149	3.12
MK III	SP	Utility	72	148	3.24
MK III	SP	Methane	73	150	3.23
MK IV	SP	Methane	78	165	2.19
MK IV	SP	Methane	79	163	2.11
MK IV	IID	Utility	64	158	1.60
MK IV	IID	Methane	71	158	1.50
MK IV	IID	Methane	67	160	1.51
MK IV	IID	Methane	69	162	1.65
		Nominal 140°F Thermostat Setting			
MK IV	IID	Methane	72	140	1.47
MK IV	IID	Methane	71	136	1.53
		Nominal 120°F Thermostat Setting			
MK IV	IID	Methane	70	120	1.27
MK IV	IID	Methane	73	120	1.30

(1) SP - Standing Pilot

(2) DOE Test Condition (Ref. 6)

Table 8.

STANDBY LOSS ANALYSIS

Parameter		Configuration		
		Measured	Predicted	
		MK III Assembly	Increased Insulation	Increased Insulation and IID
Tank and Fitting Losses	(Btu/hr)	541	186	186
Heat Exchanger Losses	(Btu/hr)	100	100	100
Loss Due to 80.6% Recovery	(Btu/hr)	154	69	69
Pilot Losses	(Btu/hr)	175	175	0
Total	(Btu/hr)	970	528	355
Standby Losses	(%/hr)	3.2	1.8	1.2

the standing gas pilot with a battery-powered ignition system. The standby loss is predicted to further decrease from 1.8 to 1.2%/hr. As can be seen in Table 7, the standby loss was 2.15%/hr with 2 inches of insulation, while 1.8%/hr had been predicted. Similarly, with added insulation and the IID a measured standby loss of 1.55%/hr was measured instead of the predicted 1.2%/hr. It was felt that the differences between predicted and measured values were due to skin losses through the tank stand and higher than predicted heat exchanger losses.

The standby losses of the MK IV configuration with the IID are shown in Figure 27. Standby losses are plotted as a function of stored water-to-air temperature difference. They are roughly constant, as would be expected, decreasing slightly as the temperature difference decreases. This occurs because conduction through the insulation is the controlling heat transfer process. It is linear with temperature difference except for a temperature effect on conductivity (it increases with increasing temperature). Also at higher tank temperatures, surface heat transfer coefficients increase. Both these effects would account for the trend in the data.

3.4 Service Efficiency

The service efficiency of the water heater is the ultimate measure of the fuel utilization. It includes both burner-on periods when the recovery efficiency predominates, and inactive standby periods when heat losses and pilot consumption dominate. The sum of gas consumed for useful water heating during the active period (recovery) and gas consumed during the inactive period (standby) determines the service efficiency. The higher the water usage, the longer the active period, and the higher the service or water-heating efficiency.

The service efficiency is defined as follows:

$$E_S = \frac{Q_{NET}}{Q_{TOT}} \cdot 100$$

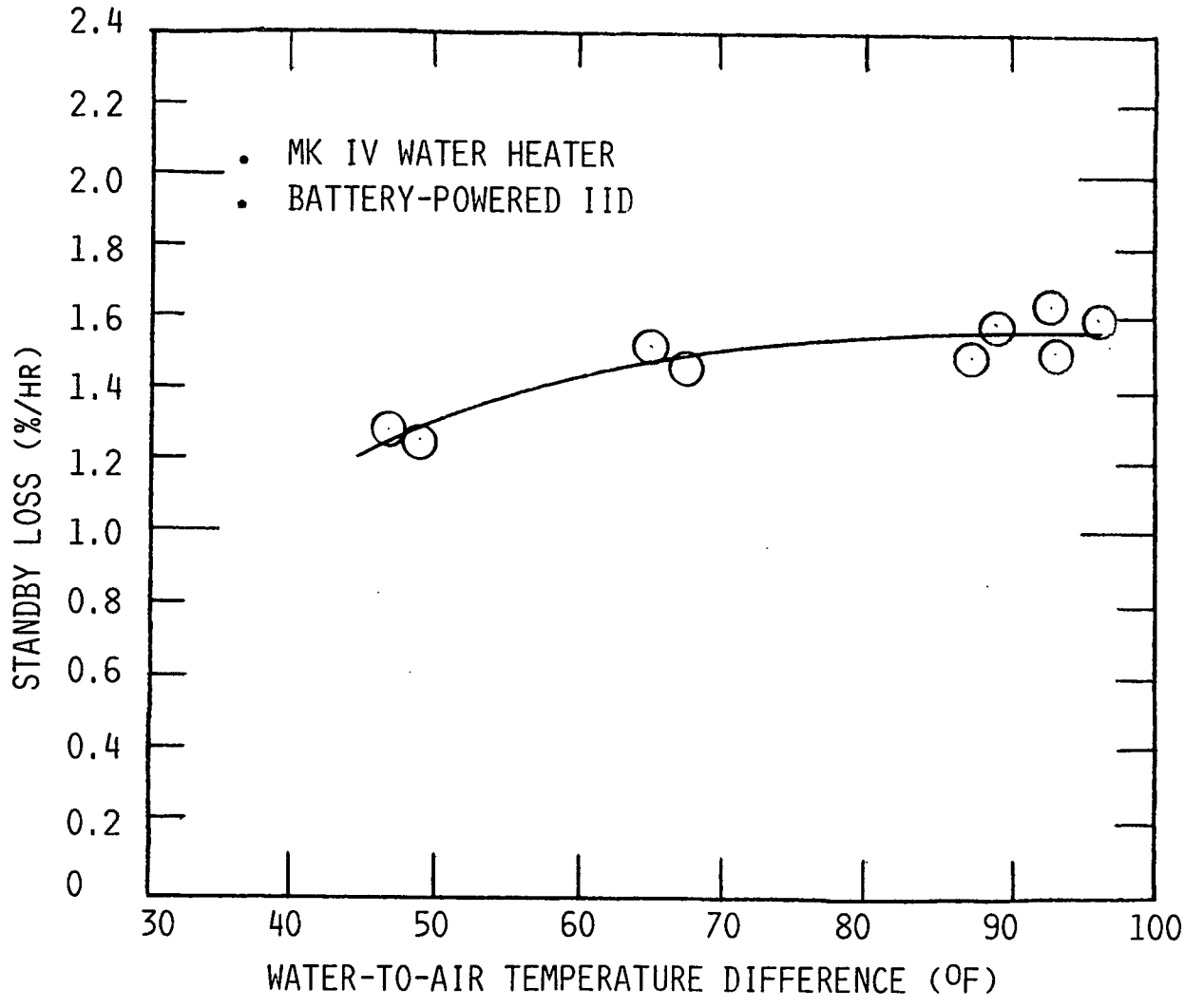

Figure 27. - STANDBY LOSSES FOR MK IV WATER HEATER WITH IID

Q_{NET} - net heat required for daily water heating (Btu/day)

Q_{TOT} - total daily energy required for daily water heating (Btu/day)

where $Q_{NET} = G \bullet k \bullet \Delta T_1$

G - daily water usage (GPD)

k - volume based specific heat (8.25 Btu/^{o}F-gal)

ΔT_1 - water temperature rise (^{o}F)

and

$$Q_{TOT} = Q_{NET}/(E_r/100) + S \bullet \Delta T_2 \bullet V \bullet k \bullet t$$

E_r - recovery efficiency of the water heater (%)

S - standby loss (%/hr)/100

ΔT_2 - temperature difference between stored water and room temperature (^{o}F)

V - water heater tank volume (gals)

t - daily time at standby operation (hrs):

$$t = 24 - Q_{NET}/[E_r/100)(Q)]$$

where Q is the burner input (Btu/hr)

The service efficiency definition for this project is based on a 75-gallon daily draw, a water outlet temperature of 150°F, and a water inlet temperature of 60°F, and an ambient of 70°F. The project goal is a service efficiency of 70%. For reference, a comparison of these conditions and the DOE test conditions is shown in Table 9. The project goal would be 67% if converted to the DOE test conditions.

A summary of the average recovery and standby loss tests for all of the assemblies are shown in Table 10. Service efficiency calculations were made for both the project and DOE test conditions of Table 9. The project service efficiency results vary from 62.6 for the MK II prototype to 71.4 for the MK IV prototype with the IID. The highest service efficiency with a gas pilot was 68.3% for the MK IV assembly. The final project assembly was 47% more efficient than a conventional water heater and 24% more efficient than the minimum ASHRAE standards (Ref. 1).

Table 9.

COMPARISON OF PROJECT AND DOE TEST CONDITIONS FOR WATER HEATERS

Parameter	Project	DOE (Ref. 6)
1. Water Usage	75 GPD	64.3 GPD
2. Water Temperature Rise	90°F	90°F
3. Water-to-Air Temperature Difference for Standby Loss	80°F	90°F
4. Stored Hot Water Temperature	150°F	160°F
5. Project Goal	70%	67%

Table 10.

SERVICE EFFICIENCY COMPARISONS OF VARIOUS WATER HEATERS

Water Heater	Recovery Efficiency (%)	Standby Loss (%)	Service Efficiency	
			Project 75 GPD (%)	DOE 64.3 GPD (%)
1. MK I	82.	2.7	66.5	62.6
2. MK II	81.5	3.5	62.6	58.2
3. MK III	80.5	3.2	63.3	59.2
4. MK IV with Gas Pilot	80.9	2.15	68.3	65.1
5. MK IV with IID	80.9	1.55	71.4	68.8
6. Conventional	70.	6.	48.7	44.2
7. ASHRAE 90A-1980	75.	3.9	57.4	53.3
8. Project Goal	---	---	70.	67.

The results shown in Table 10 are shown in Figure 28. This plot shows service efficiency plotted versus recovery efficiency for constant standby loss. The plot graphically illustrates the relationship among recovery efficiency, standby loss, and service efficiency. As can be seen, the MK IV unit with the IID passed the project goal while the MK IV assembly with the standing pilot was about 2.5% below the goal.

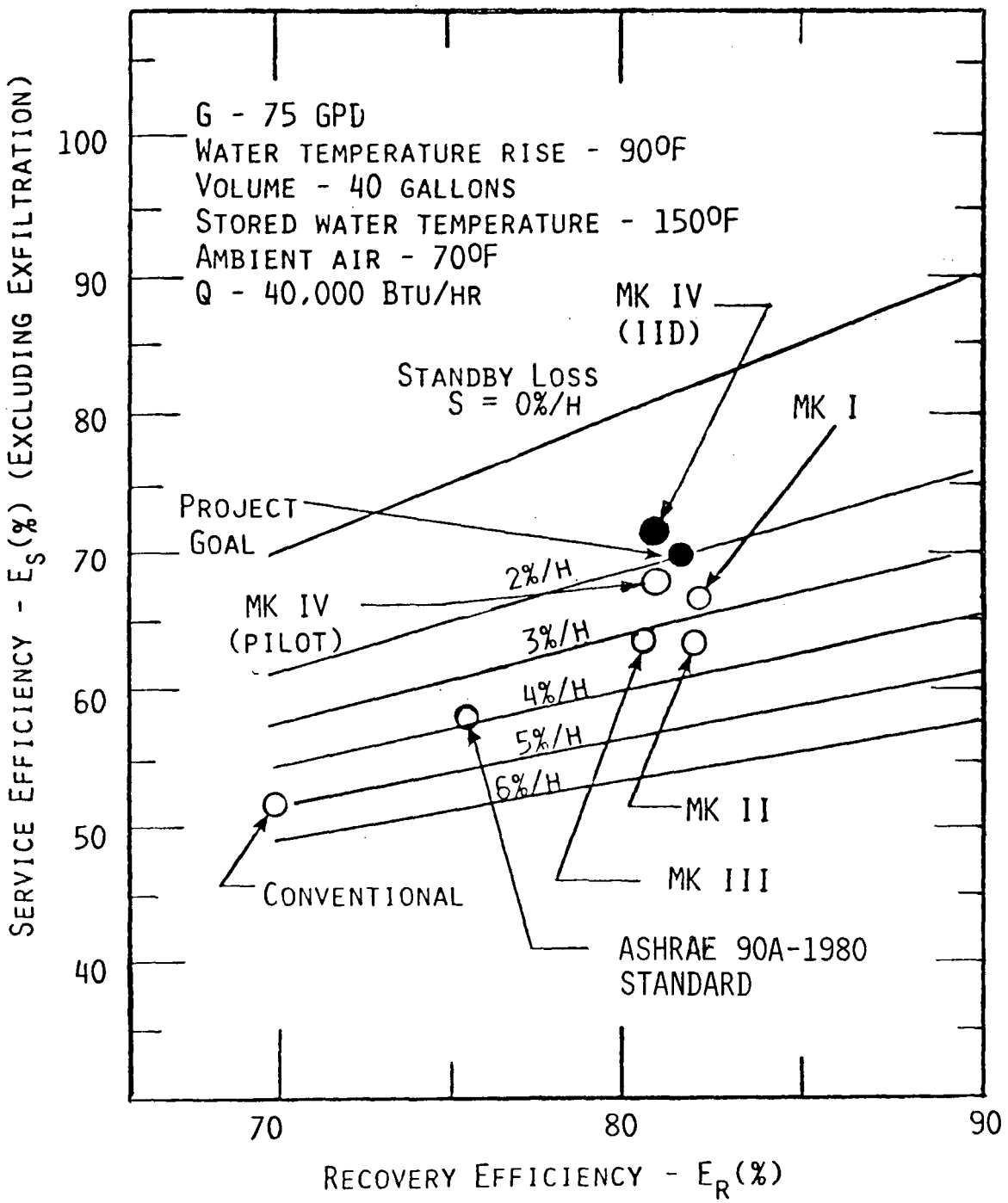

Figure 28. - SERVICE EFFICIENCY VERSUS RECOVERY EFFICIENCY AT VARIOUS STANDBY LOSSES

4.0 SPECIAL TESTING

In this section, a group of tests are described which deal with the non-energy related performance tests. These include the following four categories:

- Capacity Testing
- "Stacking" Tests
- AGA Combustion Tests (Ref. 9)
- Corrosion Protection Testing

4.1 Capacity Tests

The test plan for this project included water heater draw requirements of 2 gallons per minute for 10 minutes, 40 gallons in one hour, 80 gallons in four hours, while maintaining a 150°F delivery temperature. In addition, the DOE one-hour recovery rating for the water heater was performed (Ref. 5).

Figure 29 shows the water outlet temperature and the water temperature at six locations in the MK IV tank during a nominal 2-gallon per minute draw. As can be seen from the figure, the hot water outlet stayed above 150°F for 17 minutes. The temperature started dropping rapidly at this point. This is due to insufficient heat input to recover at a 2 GPM draw. The 10-minute requirement at 2 GPM, however, is easily passed. The temperature distribution within the tank remained stratified during the draw, which shows that the cold water at the inlet was effectively dispersed at the bottom of the tank.

The requirement of a 40-gallon and 80-gallon draw in one and four hours, respectively, was satisfied by setting a draw rate of 0.664 gallons per minute and letting the unit operate with the thermostat. The unit could have operated continuously in this mode, that is, 40 gallons in 1 hour, 80 gallons in 2 hours, etc. The temperature did not drop below 150°F at any time during the test.

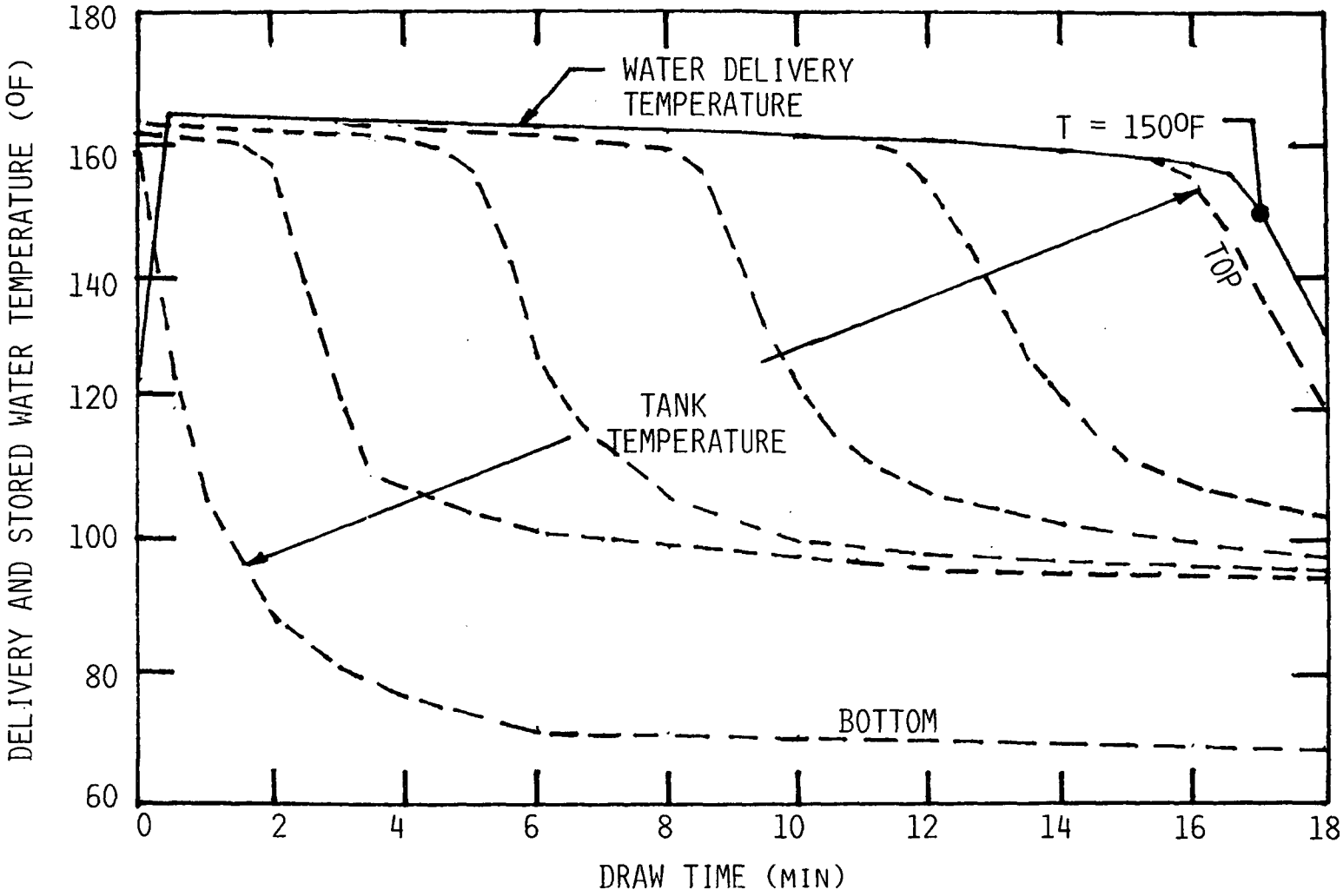

Figure 29. - DELIVERY AND STORED WATER TEMPERATURE DURING 2 GPM DRAW

The last of the capacity tests run was that required for the one-hour rating according to the amended DOE test procedures for water heaters. In this test, water is drawn from the unit at a rate of 5 gallons per minute and the time required for the delivery temperature to drop 40°F below the initial temperature is determined. For the MK IV water heater the draw was 33.9 gallons. Using this result together with the burner firing rate and recovery efficiency, the water heater had a one-hour draw capacity of 71.8 gallons based on the DOE test procedure.

Figure 30 shows the range of one hour ratings for 40- and 50-gallon water heaters for six different major manufacturers (Ref. 10). As can be seen, the project water heater surpasses almost all of the 40-gallon water heaters and is at the low range of the 50-gallon heaters.

4.2 Stacking

"Stacking" in a water heater occurs when a large temperature difference builds up between water at the top and bottom of the storage tank. The occurence could be due to a series of short draws which are of sufficient length to activate the thermostat but not great enough to displace a significant amount of water in the tank. A more complete description can be found in the Task 2.1 section of this report. Table 11 shows the water temperature at the top and bottom of the MK IV tank at the end of six successive cycles. In this test series, water was drawn at 0.5 GPM until the burner activated and the temperature at the end of each cycle was recorded. The table shows that while the top temperature did increase during the test, the difference between bottom and top temperature (stratification) was relatively constant between 1.6 to 2.7 degrees F indicating almost no tendency to stack. The general increase in temperature was a thermostat characteristic.

The lack of stacking is not surprising since the heating takes place outside of the tank and used only the water at the bottom of the tank. The water at the top of the tank can never be reheated as can happen with a center-flue model.

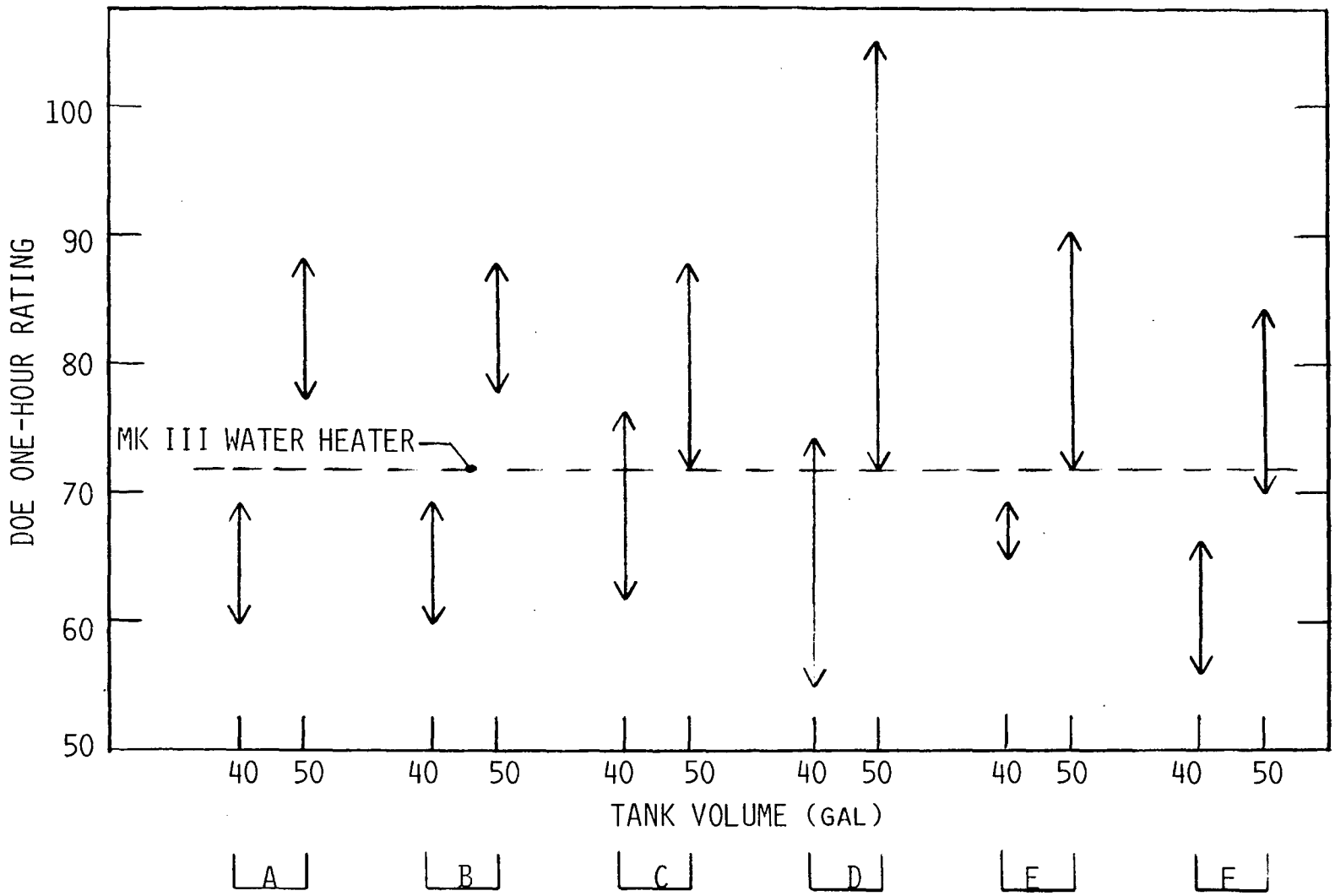

Figure 30. - RANGE OF DOE ONE-HOUR RATINGS FOR SIX WATER HEATER MANUFACTURERS

AMTI

Table 11.

WATER HEATER "STACKING" TEST RESULTS

Tank Temperature (°F)	Draw Cycle (0.5 GPM)						
	Initial	1	2	3	4	5	6
Top of Tank	165.0	166.1	167.2	167.6	167.8	168.3	169.6
Bottom of Tank	163.3	164.0	164.7	165.2	166.2	166.5	166.9
Amount of Stratification (top temperature minus bottom temperature)	1.7	2.1	2.5	2.4	1.6	1.8	2.7

4.3 Combustion Testing

While performing the full range of combustion tests required by the American Gas Association (Ref. 9) was beyond the scope of this project, some of the more important tests were performed on the water heater with natural gas.

The first series of combustion tests consisted of running the water heater at a normal gas-line pressure, a higher than expected gas-line pressure, and a low gas-line pressure. During the high-pressure condition, the water heater burner must emit less than 0.04% (400 ppm) carbon monoxide and less than 0.02% (200 ppm) while operating at the low pressure condition. The test results for the natural gas tests are shown in Table 12. In the tests, the high pressure case resulted in carbon monoxide levels that were 20% of the maximum limit imposed by AGA when these were corrected for excess air. In the low pressure tests, the carbon monoxide emissions were less than half of the standards.

The next test required that the water heater not flash back at both normal supply pressure and reduced pressure after operating for 15 minutes. This was done and flashback did not occur. The burner lit well at normal and the reduced pressure. The low pressure test is important because it is at this condition that flashback will occur in a combustion system with flashback tendencies.

Another important requirement is to safely and reliably light the burner with the gas pilot under adverse conditions. One of the tests to assess this feature is to decrease the pilot pressure just to the point where the main burner gas valve will remain open. The test is considered successful if the pilot will ignite the main burner. Table 13 shows the results of these pilot tests. As the pilot pressure was decreased from 3.2 to 0.75 inches of water, the time required for the thermopile to open the main burner valve varied from 19 to 33 seconds. Of course, this is expected since at reduced pressure, the pilot input decreases and the thermopile takes longer to attain sufficient voltage to open the gas valve. In all cases, the main burner was lit within 1 second of gas valve operation even at low pilot input. At a pilot pressure of 0.5 inches of

Table 12.

COMBUSTION TESTS

Test Condition	Carbon Monoxide		AGA Limit (Air-Free) (ppm)
	Measured (ppm)	Air-Free (ppm)	
	Natural Gas		
Normal Pressure	37	50	---
High Pressure	63	83	400
Low Pressure	60	99	200

Table 13.

PILOT LIGHTING CHARACTERISTICS AT REDUCED PRESSURES

Pilot Gas Pressure (in-water)	Time for Burner Valve to Open (sec)	Time to Light Burner (sec)
3.2	19	< 1
1.5	22	<1
1.25	25	< 1
1.00	28	<1
0.75	33	<1
0.50	Valve Closed	No burner flow

water, the pilot had insufficient strength to open the thermopile operated gas valve so burner ignition was impossible. No operating condition was found in which the pilot had sufficient input to open the gas valve but insufficient strength to light the burner. The combustion system passed this test.

The last test performed in this series was to time how long the main burner gas flow continued after the pilot shut down. The code requirement was a burner shutdown in 3 minutes. This is not a likely occurrence in the MK IV water heater because the ignition circuit monitors the pilot flame and if a pilot flame is not sensed, the thermopile circuit is opened, causing the gas valve to close. The test was performed by disabling the safety system allowing the burner gas flow to continue with the pilot off. In two tests the burner took from 44 to 53 seconds to shut down, satisfying the code requirement of less than 3 minutes.

4.4 Corrosion Protection Testing

The plan for this test was to monitor areas where condensate was expected to accumulate under different operating conditions to determine where and if corrosion protection was required. These included both recovery and draw tests. The recovery tests included initial tank temperatures from 46 to 70°F and final tank temperatures from 120 to 140°F. These were considered to be representative of worst-case conditions. Draw tests included simulated 70-gallon per day usage tests and draw cycles used in the endurance testing.

The heat exchanger and stack were instrumented with thermocouples as shown in Figure 31. Viewing windows were also installed in areas susceptible to condensation. These windows were located so that the bottom header, some of the finned tubing in the heat exchanger, and the interior of the stack (before the draft diverter) would be visible. Theoretical calculations determining dew point were compared to measured and visual data. Location of observed condensate is shown in Figure 32.

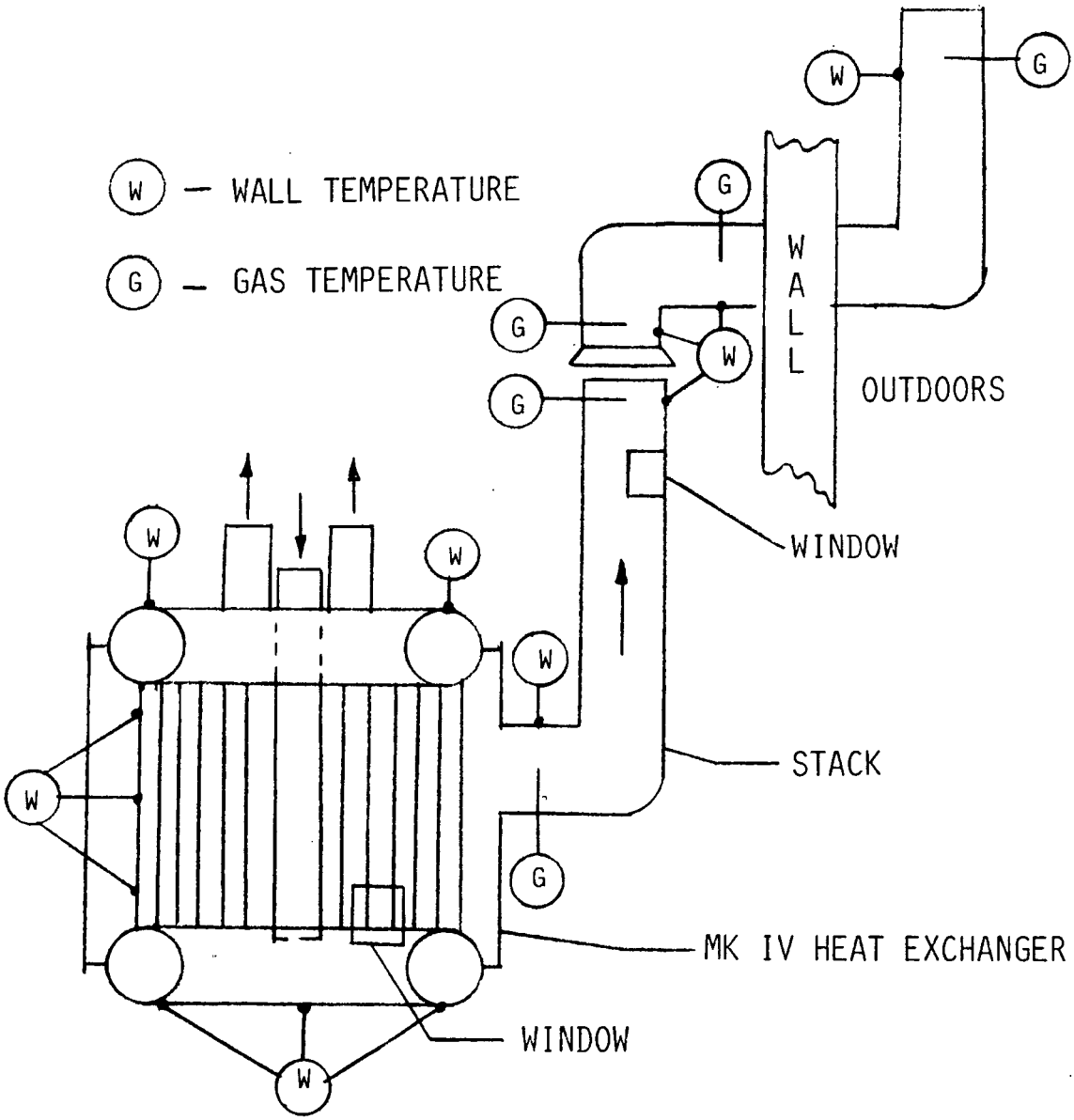

Figure 31. - HEAT EXCHANGER INSTRUMENTATION

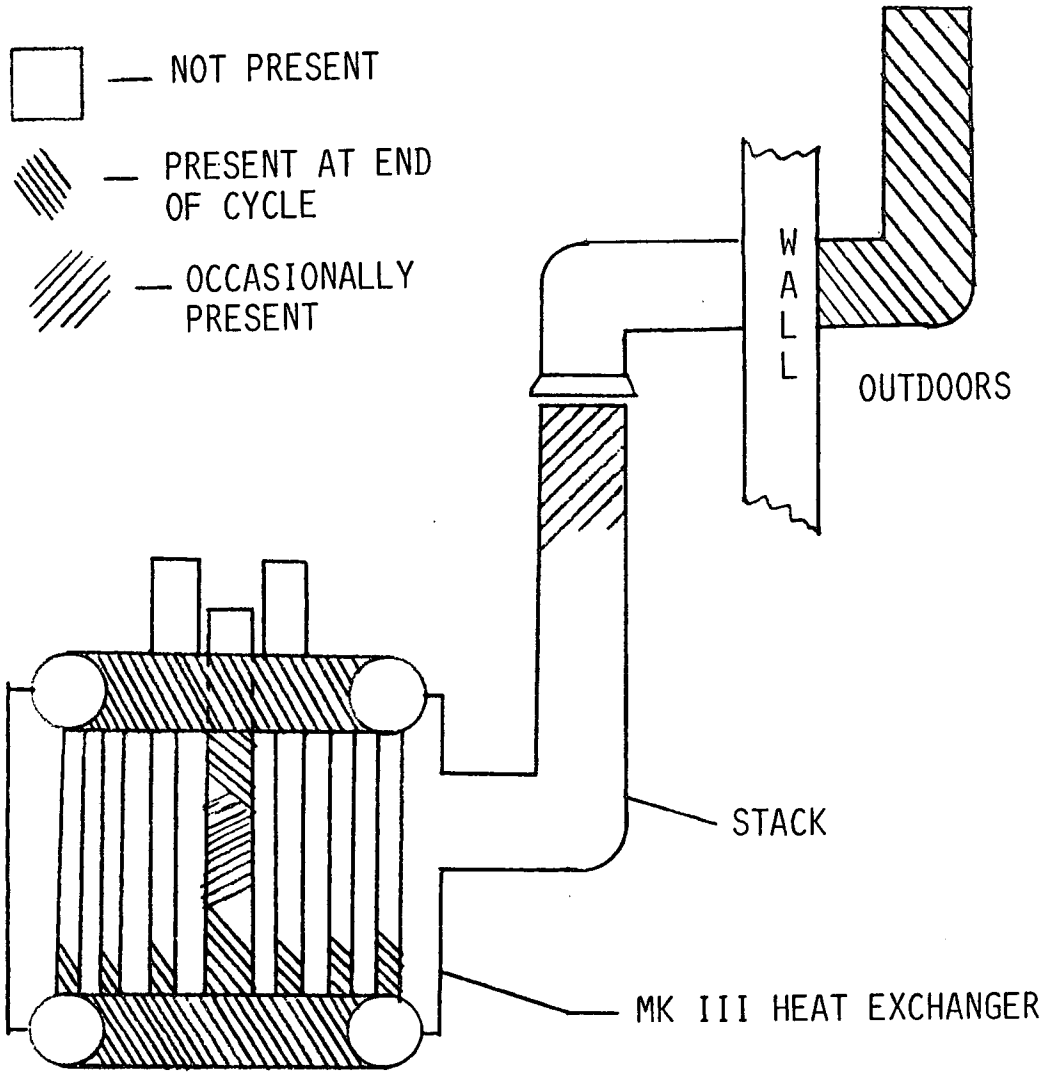

Figure 32. - LOCATION OF CONDENSATE IN WATER HEATER

In general, condensate was present during operation in the following locations:

- Lower and upper header
- Bottom third of heat exchanger finned tubes
- Elbow downstream of draft diverter
- Stack outside of building

The temporary presence of condensate was found in the following areas:

- Downcomer tube
- End of vent upstream of draft diverter

Although condensation did occur in some areas, all the condensate had evaporated within a minute of concluding a recovery test or draw test. The outdoor portion of the exhaust stack was an exception. The large amount of condensate formed in this section of the stack could not be vaporized by the heat present at the end of a combustion cycle.

The test results indicated that protection of the lower header was necessary and protection might be required for the downcomer tube. Protection is not needed for the vent upstream of the draft diverter, but may be needed for a short length downstream of the draft diverter. The outdoor stack is an unusual condition and would probably corrode even if a conventional water heater were connected to it. In fact, condensate draining back from the outdoor stack may explain the condensate present at the elbow immediately downstream from the draft diverter.

Based on the test results obtained, the heat exchanger was coated with a 60% tin, 40% lead alloy to protect its surfaces. While this protection scheme has not shown promise for use in condensing appliances because the large amounts of condensate deplete the coating, it is common commercial practice with some appliances which have the temporary presence of condensation in colder economizer sections of heaters.

The MK III heat exchanger was hot-dipped with a lead/tin mixture to provide corrosion protection. The heat exchanger was then installed in

the MK III assembly and the unit put on endurance test. The unit was operated for 437 hours, which is the equivalent of 0.8 years of water heater operation. The test was stopped so that the heat exchanger could be installed on the new MK IV tank, at which time an evaluation of the corrosion protection scheme was made.

The heat exchanger/combustion system which had been run for 437 hours was disassembled and inspected. Upon disassembly, three things were readily apparent.

1. The burner had been overheated.
2. The gas flow distribution rendered a small part of the heat exchanger surface ineffective.
3. The corrosion protection was depleted from sections of the header.

The overheating of the burner was evident from a slight separation between the top cap and screen. The cap is attached to the screen using a 1200°F braze alloy in the prototype burner. It turned out that this burner had about 30% more surface area than previous designs and thus would have a greater tendency to overheat. A burner with 30% less area was installed and was used in subsequent testing.

A maldistribution in the gas flow was evident based on the discoloration of the finned tubing of the heat exchanger. The bottom 0.75 to 1 inch of the 6-inch long finned tubes did not appear to be transferring heat based on the observed color pattern. This can be seen in Figure 33. While a recovery efficiency of 80.5% was being attained with this configuration, it was felt some additional recovery could be obtained with a slight modification. This was accomplished by lowering the burner by 1 inch relative to the heat exchanger position. Recovery efficiencies measured after this change was made averaged 80.9%, indicating a slight improvement in heat exchanger effectiveness.

The last observation during the endurance test was the depletion of the solder coating on the headers as can be seen in Figure 34. While coated and uncoated samples of finned tubing showed that the coating

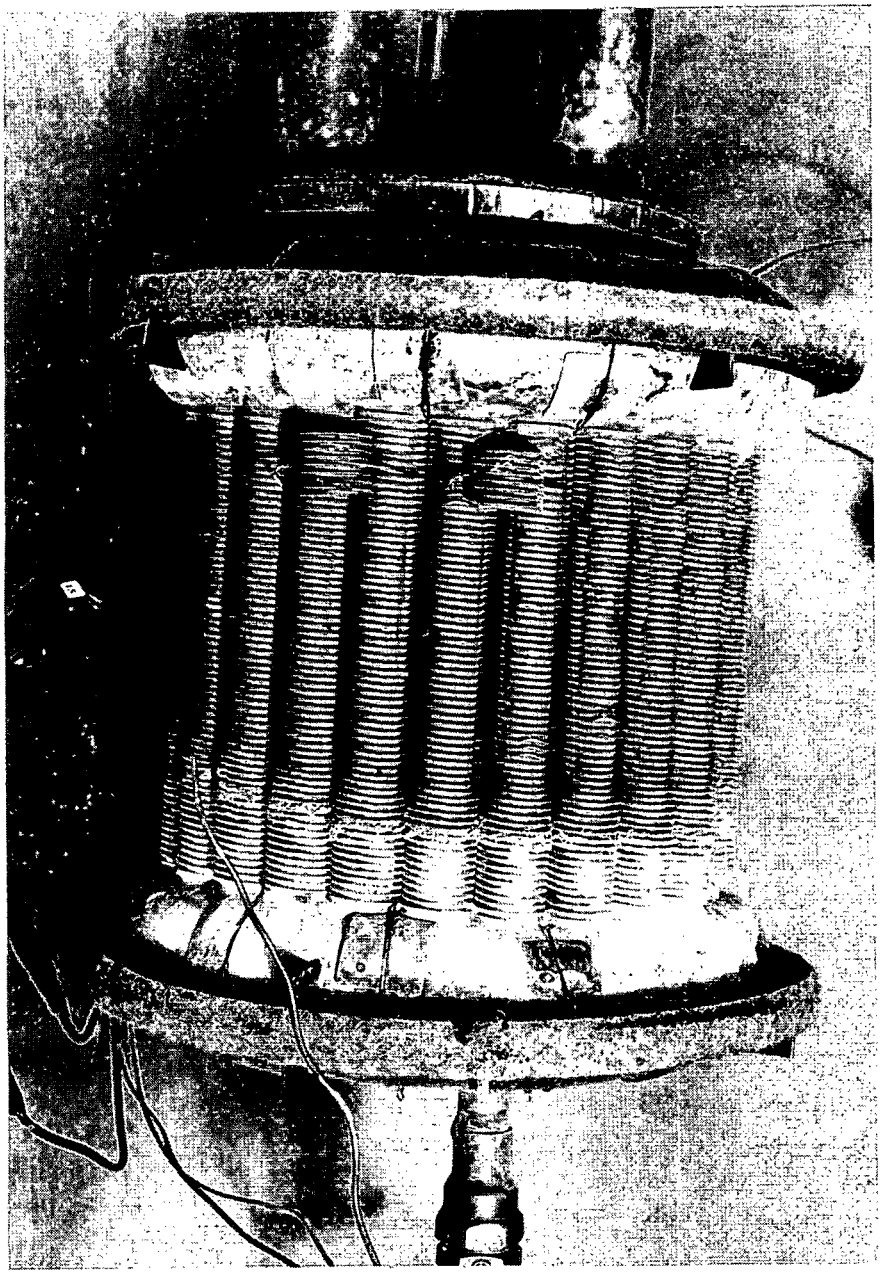

Figure 33. - HEAT EXCHANGER AFTER 437 HOURS

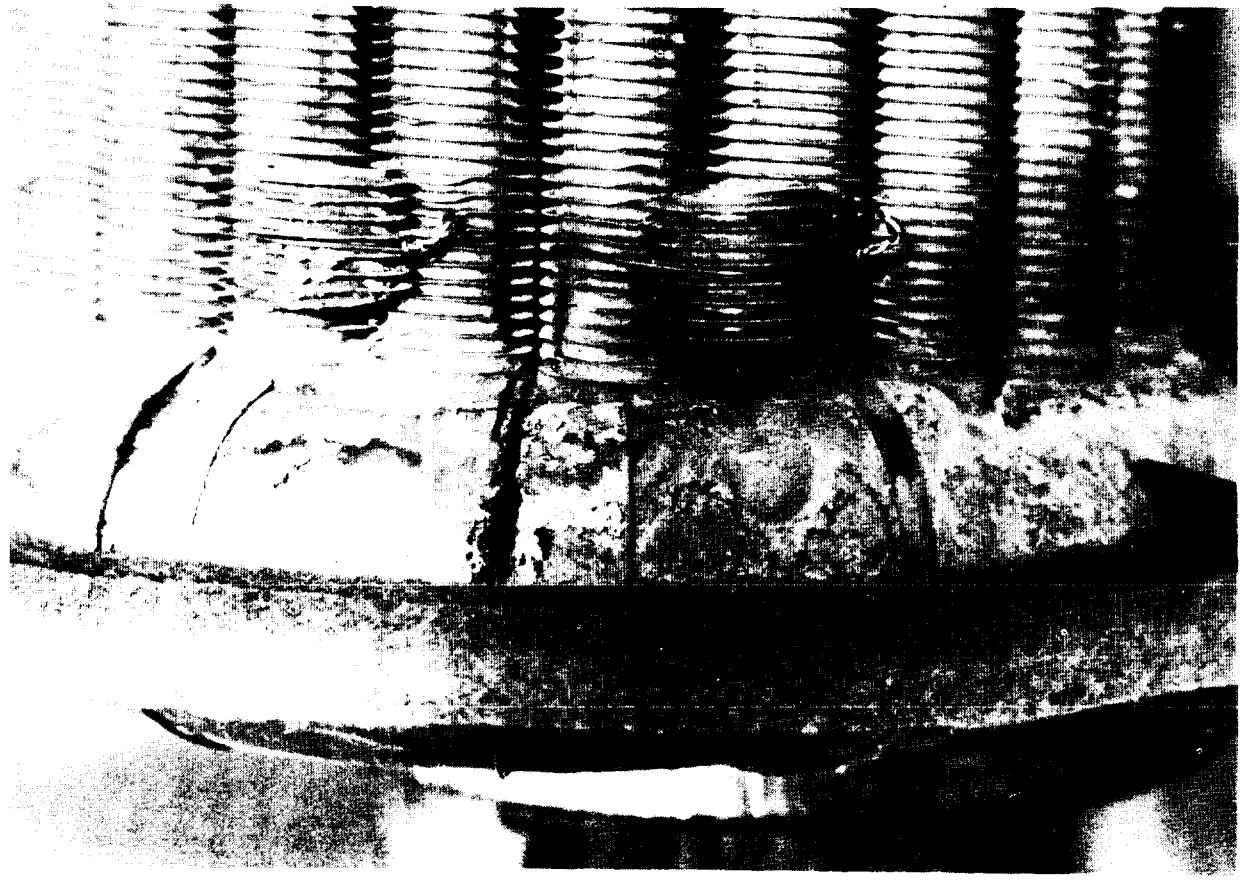

Figure 34. - TOP HEADER AFTER 437 HOURS (will enlarge to 5x7)

protected the finned tubing, apparently the condensate on the headers was a more severe condition, especially since the hot gases did not pass these surfaces at a high enough velocity to avoid condensation completely. Coated and uncoated samples in the header locations did not, however, show excessive weight loss (less than the equivalent of 0.001 inches/year).

In order to further evaluate corrosion protection schemes, tin/lead mixtures of 95% tin - 5% lead, 50% tin - 50% lead, 0% tin - 100% lead were applied to the upper and lower headers. The MK IV assembly was then operated for 280 hours of burner operation (equivalent to one-half years' operation) and disassembled. Of all the schemes, the 95% tin - 5% lead coating was the most successful. While all coated surfaces had an oxide layer, when this oxide layer was removed, the only coating which had not been depleted was the 95% tin - 5% lead mixture. It should be noted that even though the other coatings had been depleted, there was no failure of the heat exchanger due to corrosion in these areas nor any evidence of gross corrosion.

5.0 COST EFFECTIVENESS EVALUATION

There are three elements that need definition prior to evaluating the cost effectiveness of the water heater. First is establishing the price of the new water heater relative to conventional equipment. The second step is to define the performance improvement of the new water heater over the conventional unit. Third, energy costs have to be specified to calculate the payback and life-cycle savings of the new design. The energy comparisons were made in Section 4.0 and the results used in this evaluation are those shown in Table 10. The pricing and energy cost data follows.

Production costs of the MK III assembly were determined by AMTROL for the majority of the water heater components at production quantities of 10,000 units/year. The controls, pilot, IID, the MK IV tank prices, and large production run costs were estimated by AMTI using vendor quotes and engineering estimates. These costs, converted from manufacturing costs to the consumer list prices shown in Table 14, account for manufacturer's profit and the distributor's and retailer's mark-up. The prices for quantities of 10,000 units per year included 3.6 hours of labor, which amounted to $210 of the total price. For large quantities (greater than 100,000 units per year) an estimate of one hour of labor was made instead of 3.6 hours. In addition, for large quantities, the material costs were decreased by 15% to 20%, depending on the particular assembly. This decrease resulted from the assumption that purchased parts for the 10,000-unit run would instead be made inside the plant for the 100,000 unit run. The prices shown for the conventional units were average prices for several units, with the range of prices $150 to $250 for the conventional unit and $290 to $403 for the unit meeting the ASHRAE 90A-1980 STANDARD.

The next requirement for the analysis was an energy cost to be used in making the comparisons. The original work performed in Phase I assumed an average gas cost of $3.00 per million Btu (at the time the national average for 1977 was $2.44). Figure 35 shows 1982 gas prices in various parts of the country. The national average for the second quarter of 1982

Table 14.

CONSUMER PRICES USED IN COST EVALUATION

Assembly	Pilot	Prices for Small (10,000/yr) Run	Prices for Large (100,000/yr) Run
MK III	Gas	625	410
MK IV	Gas	650	405
MK IV	IID	700	461
ASHRAE*			328
Conventional			200

* Water Heater Meeting ASHRAE 90A-1980 STANDARD

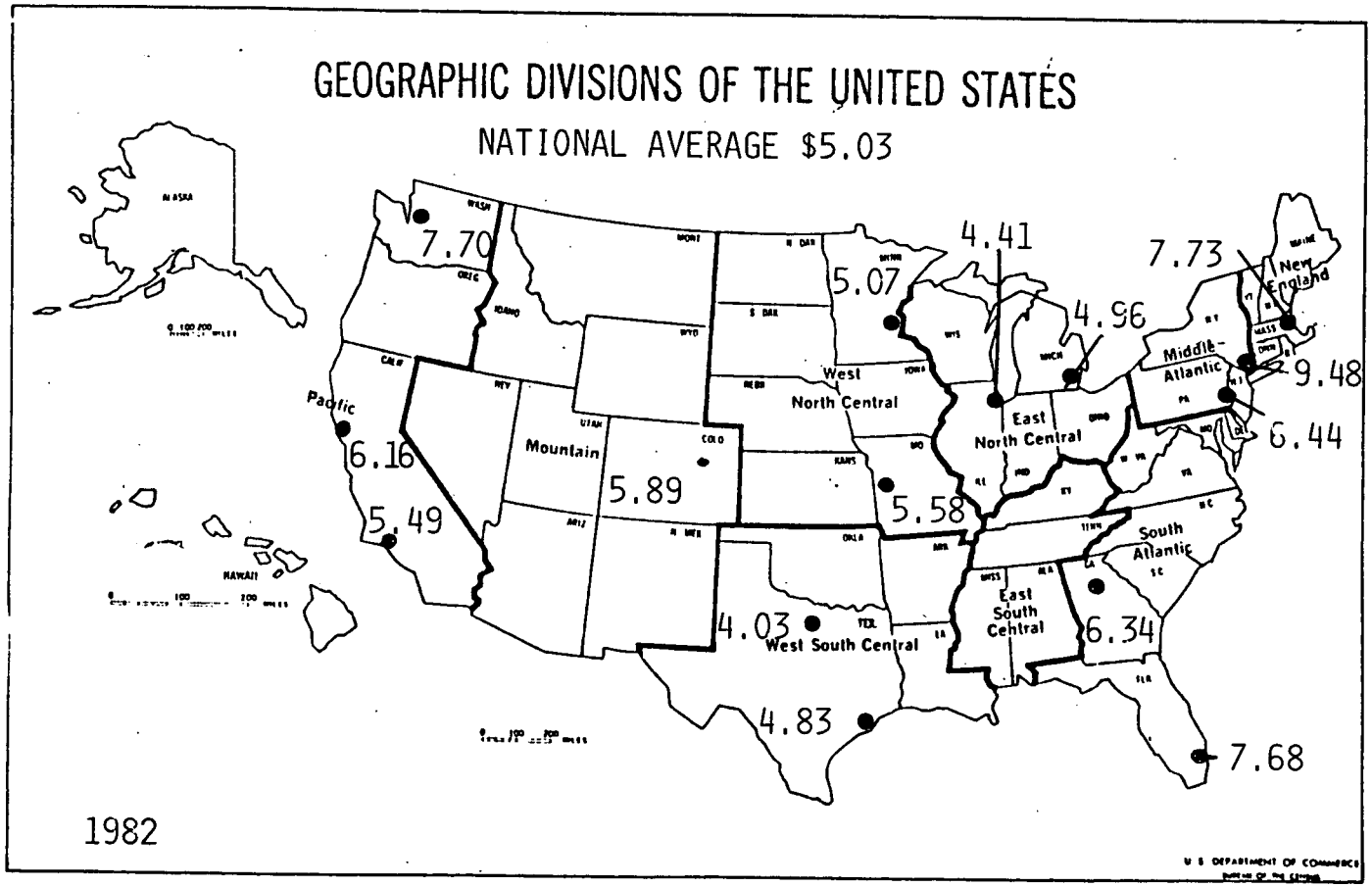

Figure 35. - RESIDENTIAL GAS PRICES ($/MMBtu)

is $5.03 (Ref. 11). Examining the prices in Figure 35, it can be seen that gas prices vary from about $4.03 per million Btu in the southwest to $9.48 in the north. For the comparisons in this section, a national average price of $5.00 per million Btu as well as a range of $4.00 to $8.00 per million Btu will be used to compare the project water heater to commercially available units.

An example of the cost comparisons can be seen in Figure 36. This shows a plot of payback versus cost premium for the case of the MK IV assembly with the battery-powered ignition system versus a unit meeting the minimum ASHRAE 90A-1980 STANDARD. The range of gas costs from $4.00 to $8.00 per million Btu are shown in the figure. The cost premium for the project water heater in this case is $133 ($461 for the project heater versus $328 for the ASHRAE unit) and results in a payback of 3.7 years at the national average gas cost. At gas costs of $4.00 and $8.00 per million Btu the payback varies from 4.7 to 2.3 years, respectively.

A similar analysis was performed for all of the assemblies and the results are summarized in Table 15. In this comparison, all of the water heater assemblies are shown rated against both the conventional and ASHRAE units. The most cost-effective design was the MK IV assembly with the gas pilot. At the national average gas cost, it had a payback of 2.6 years when compared to the ASHRAE unit and 3.1 years against the conventional unit. The MK IV with the IID was the next best with about a 3.7 to 4-year payback. The MK III was still acceptable with a 4.3-year payback. The full range of paybacks for all of the units varied from 1.6 years for the MK IV with the gas pilot rated against the ASHRAE unit at $8.00 per MMBtu up to 5.7 years for the MK III rated against the ASHRAE unit at $4.00 per MMBtu. The ASHRAE unit when rated against the conventional unit had a payback of 4 years at the national average gas price. If the assumption that anything less than a 5-year payback is attractive to consumers, then the project water heater has several attractive combinations which should have general national appeal when manufactured in large quantities.

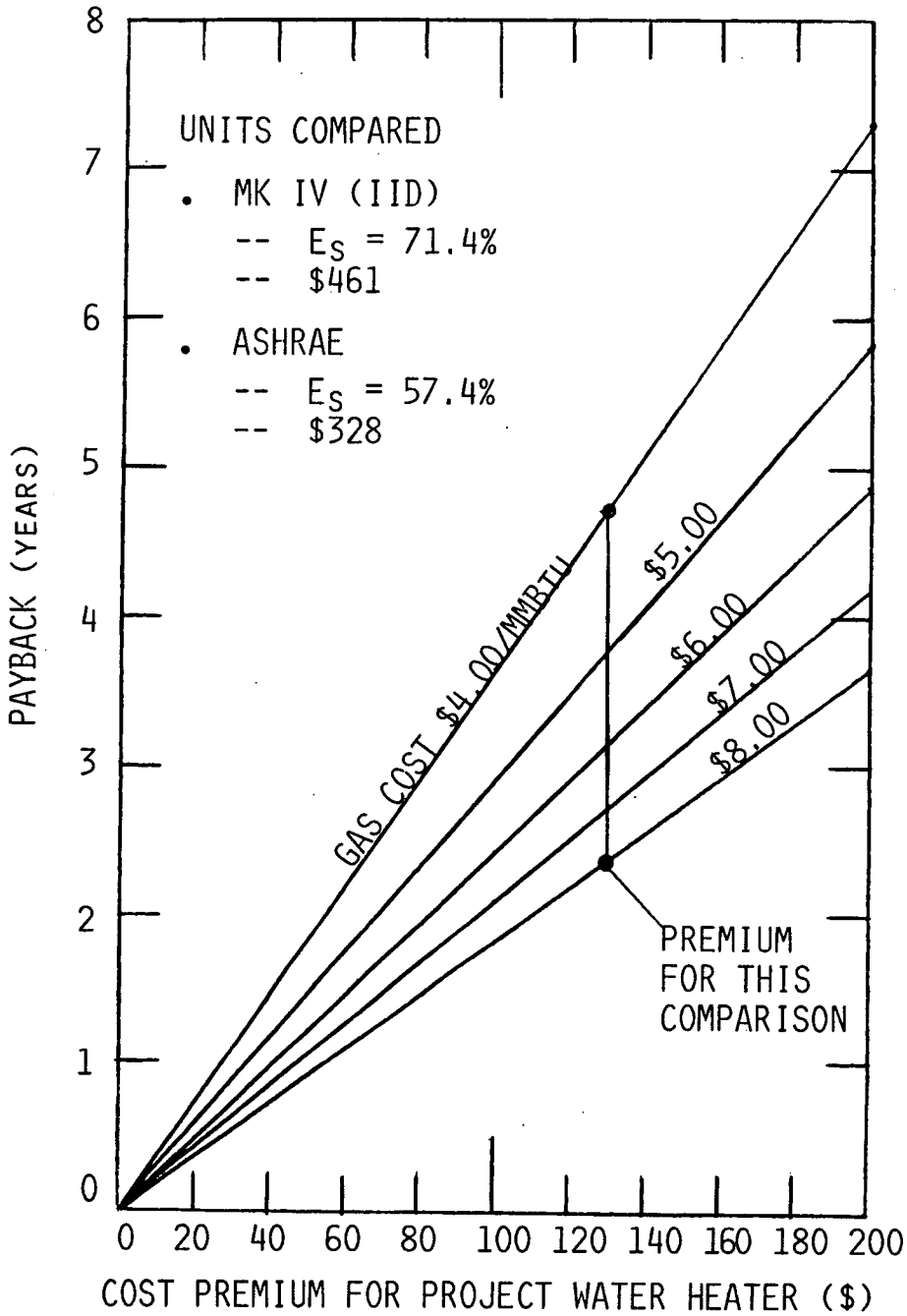

Figure 36. - PAYBACK OF MK IV WATER HEATER WITH IID VERSUS UNIT MEETING ASHRAE 90A-1980 STANDARD

Table 15.

PAYBACK COMPARISON OF DIFFERENT WATER HEATER MODELS

Water Heaters Compared		Price[2] Premium	Payback in Years		
High-Efficiency Unit	Base Unit		Gas Cost $5.00/MMBtu	Gas Cost $4.00/MMBtu	Gas Cost $8.00/MMBtu
MK III (gas pilot)	Conventional	$210	4.3	5.5	2.7
MK III (gas pilot)	ASHRAE[1]	82	4.3	5.7	3.0
MK IV (gas pilot)	Conventional	205	3.1	4.0	2.0
MK IV (gas pilot)	ASHRAE[1]	77	2.6	3.5	1.6
MK IV (IID)	Conventional	261	4.0	5.0	2.5
MK IV (IID)	ASHRAE[1]	133	3.7	4.7	2.3
ASHRAE[1]	Conventional	128	4.	5.3	2.5

(1) Water Heater Meeting ASHRAE 90A-1980 STANDARD

(2) Based on High Volume Product Run

AMTI

Another calculation which was performed in comparing the different water heaters is that of life-cycle savings. This amount is determined by taking the total savings of the water heater over an 11-year life (Ref. 12) and subtracting the price premium from that amount. The remainder is the amount of money the homeowner will realize after the cost premium is paid. The results of this calculation are shown in Table 16. The highest life-cycle savings ($522) were obtained with the MK IV unit and the gas pilot when compared with the conventional unit at the national average gas cost, while the lowest life-cycle savings are obtained when the MK III water heater is compared with the ASHRAE unit ($128). When the entire range of gas costs are considered, the life-cycle savings varied from a low of $76 for the MK III unit compared with the ASHRAE unit at $4.00 per MMBtu to a high of $922 for the MK IV unit with the gas pilot when compared with the conventional unit at a gas price of $8.00 per MMBtu. The ASHRAE unit when compared to the conventional unit results in life-cycle savings from $138 to $435, depending on gas prices. It should be noted that these estimates do not include a residual value for the project water heater at the end of the 11-year period. With its plastic-lined tank and copper heat exchanger, the project water heater should have a useful life in excess of the 11-year average of conventional tanks.

It is concluded, therefore, that the project water heater should be economically attractive in today's market, and more so as costs of gas escalate.

Table 16.

LIFE-CYCLE SAVINGS COMPARISON OF DIFFERENT WATER HEATER ASSEMBLIES

Water Heaters Compared		Price[2] Premium	Life-Cycle Savings ($)		
High-Efficiency Unit	Base Unit		Gas Cost $5.00/MMBtu	Gas Cost $4.00/MMBtu	Gas Cost $8.00/MMBtu
MK III (gas pilot)	Conventional	$210	327	210	645
MK III (gas pilot)	ASHRAE[1]	82	128	76	218
MK IV (gas pilot)	Conventional	205	522	359	922
MK IV (gas pilot)	ASHRAE[1]	77	242	161	440
MK IV (IID)	Conventional	261	455	312	884
MK IV (IID)	ASHRAE[1]	133	262	178	503
ASHRAE[1]	Conventional	128	224	138	435

(1) Water Heater Meeting ASHRAE 90A-1980 STANDARD

(2) Based on High Volume Product Run

6.0 REFERENCES

1. ASHRAE Standard 90A-1980, "Energy Conservation in New Building Design", The American Society of Heating, Refrigerating, and Air-Conditioning Engineers, New York, NY, 1980.

2. A.D. Vasilakis, J.F. Pearson and J. Gerstmann, "Research and Development of a High-Efficiency Gas-Fired Water Heater, Volume 2: Task Reports," Prepared for Oak Ridge National Laboratory by Advanced Mechanical Technology, Inc., ORNL/Sub-7381/2, January 1980.

3. South Coast Air Quality Management District, El Monte, CA 91731, Rules and Regulations, Rule 1121 Control of Nitrogen Oxides from Residential-Type Natural Gas-Fired Water Heaters, December 1, 1978.

4. R.F. Topping, "Stand-Alone Ignition Devices", Arthur D. Little Case No. 85770, Final Report to Gas Research Institute, Contract No. 5080-345-0375.

5. "Energy Conservation Program for Appliances: Amended Test Procedures for Water Heaters", Federal Register, May 9, 1979.

6. "Energy Conservation Program for Appliances: Test Procedures for Water Heaters", Federal Register, Tuesday, October 4, 1977, Part III.

7. "An Assessment of Retrofit Automatic Vent Dampers for Residential Heating System", Arthur D. Little, Inc., November 1977.

8. "Final Energy Test Procedures for Furnaces", Federal Register, May 10, 1978.

9. "American National Standard for Gas Water Heaters", Volume I, ANSI Z21.10.1-1975, American Gas Association.

10. "Directory of GAMA Water Heater Efficiency Certification Program", Gas Appliance Manufacturers Association, July 1982.

11. Energy User News, Volume 7, No. 52, December 27, 1982.

12. "Study of Energy-Saving Options for Refrigerators and Water Heaters", Volume 2: Water Heaters; Arthur D. Little, Inc., May 1977.

R. E. Minturn
9102-2, Y-12

102