FILE COPY
DO NOT
REMOVE

ENERGY

CONSERVATION

ORNL/Sub/79-24711/1

Highly Efficient Commercial Pulse-Combustion Gas-Fired Water Heater

Research and Development Report

E. A. Lawton
L. Irwin
A. Lawler
L. N. Bohanan

SHOCK HYDRODYNAMICS
WHITTAKER CORPORATION

Work performed for

OAK RIDGE NATIONAL LABORATORY
operated by
UNION CARBIDE CORPORATION
for the

U. S. DEPARTMENT OF ENERGY

OFFICE OF BUILDINGS ENERGY
RESEARCH AND DEVELOPMENT

Printed in the United States of America. Available from
National Technical Information Service
U.S. Department of Commerce
5285 Port Royal Road, Springfield, Virginia 22161
NTIS price codes—Printed Copy: A08 Microfiche A01

This report was prepared as an account of work sponsored by an agency of the United States Government. Neither the United States Government nor any agency thereof, nor any of their employees, makes any warranty, express or implied, or assumes any legal liability or responsibility for the accuracy, completeness, or usefulness of any information, apparatus, product, or process disclosed, or represents that its use would not infringe privately owned rights. Reference herein to any specific commercial product, process, or service by trade name, trademark, manufacturer, or otherwise, does not necessarily constitute or imply its endorsement, recommendation, or favoring by the United States Government or any agency thereof. The views and opinions of authors expressed herein do not necessarily state or reflect those of the United States Government or any agency thereof.

ORNL/Sub/79-24711/1
Dist. Category UC-95d

HIGHLY EFFICIENT COMMERCIAL PULSE-COMBUSTION GAS-FIRED WATER HEATER

RESEARCH AND DEVELOPMENT REPORT

L. N. Bohanan
E. A. Lawton
L. Irwin
A. Lawler

December 1982

Report Prepared by

SHOCK HYDRODYNAMICS DIVISION
Whittaker Corporation
20131 Sunburst Street
Chatsworth, California 91311
under
Subcontract 86X-24711C

for

Oak Ridge National Laboratory
Oak Ridge, Tennessee 38730
operated by
UNION CARBIDE CORPORATION
for the
U.S. DEPARTMENT OF ENERGY
under Contract No. W-7405-eng-26

FOREWORD

This final report is submitted as required on Subcontract 86X-24711C to Oak Ridge National Laboratory initiated on 01 October 1979 through December 1981, American Appliance Mfg. Corp. served as a subcontractor. The majority of the laboratory and test effort was conducted at their engineering laboratory until that time. Subsequently, a subcontract was signed with the Gas Appliance Laboratory, and the rest of the laboratory effort was performed at that location.

The Program Manager for this effort was Dr. Emil A. Lawton, Manager, Advanced Programs of the Shock Hydrodynamics Division of the Whittaker Corporation. The Principal Investigator was Larry Irwin, Research Physicist, at Shock Hydrodynamics. Major contributors to the technical efforts included Larry N. Bohanan, General Manager; and Arthur Lawler, Senior Research Engineer.

The effort at American Appliance Mfg. Corp. was coordinated by Mr. H. Jack Moore, Vice President Engineering, and he was assisted by Myron Denau, Product Engineer. At Gas Appliance Laboratory, Mr. Charles Koch, President, also served as a consultant in this program.

The Oak Ridge Technical Manager for the initial portion of this effort was Mr. W. L. Cooper, Jr., and he was succeeded by Mr. V. O. Haynes. The advice and encouragement of these two gentlemen is gratefully acknowledged. This project was part of the U.S. Department of Energy, Energy Conversion Equipment Branch Program managed by R. J. Fiskum.

ABSTRACT

A prototype of a gas-fired, pulse-combustion water heater for commercial applications has been developed. The prototype development program consisted of a market assessment, design specifications and testing procedures, and a fabrication and test program. The unit is an instantaneous model which has a gas input rate of 185,000 Btu/h and a thermal efficiency of 97%. The unit consists of air and gas decouplers, concentric gas and air flapper valves, neck distributor head, combustion chamber, four resonance tubes, exhaust decoupler, and a preheater tank with a secondary heat exchanger.

The market assessment includes an identification of the market segment where maximum energy savings can be derived; development of preliminary specifications for a marketable product; estimates of unit shipments possible for the new product, through the year 2000; payback analysis for the new product utilizing a computer program developed to contrast cost of production to consumer payback; estimates of energy savings through the year 2000, assuming replacement of current in-place units with the new product; and a definition of the requirements for success of the marketing effort of the commercial pulse-combustion gas-fired water heater, as well as the trade-offs which will be encountered in the development of this new product. The market data indicated that a water heater with a gas input rate of just under 200,000 Btu/h would have the greatest chance of capturing a significant market. The report concludes that the product concept is very marketable, and paybacks developed are acceptable for the new product specifications developed. For example, a payback of less than two years was estimated for a duty cycle of 2920 hours per year and natural gas priced at 50 cents a therm, when the additional manufacturing cost of the water heater was $839. This is for a thermal efficiency of 93%. Depending on market share, the quads saved by the year 2000 ranged from 0.1 quad to 2.5 quads for this unit.

The report also developed a justification for assuming a five-year replacement cycle for commercial water heating equipment. The results of the market analysis indicate a 5.6% average growth projection for commercial buildings, and the report indicates that the cyclical nature of the commercial water heater market has a strong correlation to the decline and rise in commercial building inventory over the past ten years. These predictions have been validated by the market.

The test program was intiated by determining the geometric parameters for components in an open tank using easily assembled engineering models. The results were applied to a prototype instantaneous model. The first prototype, with a single resonance tube, suffered from inadequate heat transfer and difficult fabrication. The second prototype, using four resonance tubes, developed a gas input rate of 190,000 Btu/h, but was too noisy for most applications generating a sound pressure level of 82 dBA at a distance of 39 inches (1 meter) from the unit. A thermal efficiency of 89 to 92 percent was obtained.

83R025
Introduction

An acoustic treatment was applied, including the installation of a secondary heat exchanger in a preheater tank. The total treatment reduced the noise level to 64 dBA and raised the thermal efficiency to 97 percent. However, the firing rate was reduced to 180,000 Btu/h.

TABLE OF CONTENTS

	PAGE
FOREWORD	i
ABSTRACT	ii
TABLE OF CONTENTS	iv
STATEMENT OF WORK	v

EXECUTIVE SUMMARY

MARKET ASSESSMENT

TECHNICAL DEVELOPMENT

STATEMENT OF WORK

SUBCONTRACT NO. 86X-24711C

Task 1. Market Assessment

Perform the studies necessary to determine the marketability of the proposed concept of a highly efficient commercial pulse-combustion, gas-fired water heater. Performance characteristics of the units which can be marketed, shall be identified and target market(s) defined. All problems which impede commercialization are to be identified along with the solutions planned to overcome the problems. These problems shall include, but not be limited to, consideration of factors that (a) have a strong effect on buyer acceptance such as price, operating and maintenance costs, return on investment relative to other related business expenditures, payback period and life-cycle costs, reliability, safety, maintenance, product size, and noise; and (b) are pertinent to manufacturing, such as capital requirements and ease of manufacturing. Applicability to the new, replacement, and retrofit markets shall be determined. Develop and apply a rating method for determining the characteristics of the unit(s) for best demonstrating the pulse-combustion, gas-fired water heater. Rating criteria shall include the potential for National energy savings, the time schedule on which such energy savings might realistically be achieved, the difficulty of solving the problems impeding commercialization, and the economic trade-offs relating to the performance characteristics of the improvement options.

Task 2. Technical Development

Develop detailed specifications for the pulse-combustion, gas-fired water heater and perform the work necessary to develop, fabricate, and test the prototypes which are optimized for the target market defined in Task 1, including design, fabrication, and use of an engineering model. Engineering evaluations shall be made of the trade-offs between performance of the unit and the associated cost differentials. These evaluations shall consider factors such as size, capability of unit, noise, reliability, and modifications required to adapt the equipment to other portions of the potential market. The gas-fired water heater unit must have an overall service or seasonal efficiency significantly higher than those planned to be on the market in 1980 to 1985. The units shall be equivalent to, or better than, current models in service and convenience, and shall be economically justified. The design and fabrication of the prototypes shall include current production considerations. Testing shall be performed under conditions which are realistic to the chosen target market. Testing procedures approved by the ORNL-Technical Manager (TM) shall be used. (If the Company directs the Seller to conduct additional testing which requires test equipment not currently available to the Seller or not listed in the Seller's proposal [Part I, Technical Proposal, 1000-057901, May 1979], the Company will furnish the test equipment or authorize the rental or purchase of the test equipment necessary to conduct the tests.)

Develop sound attenuation for already developed prototype gas-fired pulse-combustion water heater. The current model generates a sound pressure level at full power of 250,000 micropascals (82 dBA) three feet from the unit when 10 ft. of ducting is attached to the inlet air and exhaust decouplers, which would limit its applicability for some applications. The following subtasks are to reduce the sound level to as low a level as practical with a goal to reduce it to at least 125,000 micropascals (76 dBA).

Subtask 2A. Exhaust Noise

The current model emits its loudest sound from the exhaust decoupler outlet. Several preliminary designs will be drawn up to provide acoustic attenuation either by straight muffling, or by incorporation of a secondary heat exchanger at the bottom of the water tank. Since the unit operates in the condensing mode, provisions to control corrosion must be made, which suggests that a secondary heat exchanger may not be much more expensive, and could increase the efficiency of the heater about five percent.

The selected design will be fabricated, assembled to the water heater, and tested to verify that combustion performance remains high, and that acceptable sound isolation is achieved. Modifications may be made as indicated from the results of these studies.

Subtask 2B. Inlet Noise

Almost as much noise emanates from the inlet air decoupler as from the outlet of the exhaust decoupler. Acoustic treatment to reduce the sound level includes sound absorbing baffles, sound isolators, and sound absorbers. These will be incorporated and tested to determine the most effective techniques.

Subtask 2C. Integrated Unit Noise

The control of the loudest sound levels allows other, weaker noise sources to become evident. These are normally identified by Shock Hydrodynamics using an acoustic mapping technique. This enables one to locate sound leaks at specified locations.

Further sound attenuation will be incorporated as indicated by acoustic mapping.

When the acoustic treatment is completed, the combustion efficiency, rate, and other performance parameters will be retested to determine if any of the modifications have affected the performance; and necessary adjustments will be made.

Task 3. Research and Development Report

Prepare a report which includes a summary covering all aspects of the project through the completion of Task 2.

83R025
Summary

HIGHLY EFFICIENT COMMERCIAL PULSE-COMBUSTION GAS-FIRED WATER HEATER

EXECUTIVE SUMMARY

TABLE OF CONTENTS

		PAGE
	TABLE OF CONTENTS	i
1.	INTRODUCTION	1
2.	TASK 1. MARKET ASSESSMENT	1
3.	TASK 2. TECHNICAL DEVELOPMENT	4
4.	CONCLUSIONS	10

EXECUTIVE SUMMARY

1. INTRODUCTION

The objective of this program was to develop a commercial gas-fired water heater significantly more efficient than the existing appliances on the market. The specific approach was to develop a pulse-combustion water heater with a service efficiency of 70% or better, as compared to contemporary units having service efficiencies of about 50%. Consequently, a goal of 85% was set for both the steady-state recovery efficiency of the storage water heater and the steady-state thermal efficiency of the instantaneous unit. This would achieve a significant improvement over the current standard of 70% for each of these efficiencies. Since pulse combustors are inherently noisy, an additional goal of reducing the generated sound power level to 76 dBA or less was adopted. An instantaneous prototype water heater having a gas input rate of just under 200,000 Btu/h was developed. The work to extend the development to a storage water heater was not undertaken because of a change in U.S. Department of Energy attitude toward product development and because of American Appliance Manufacturing Corporation's failure to continue in the project.

The program consisted of a market assessment, a design specification, and a fabrication and test effort.

2. TASK 1: MARKET ASSESSMENT

The market assessment was done in four parts as follows:

1. Target Market Definition and Assessment
2. Development of Product Characteristics and Specifications
3. Analysis of Potential Market Share
4. Analysis of Implications to Energy Conservation

2.1 Target Market Definition and Assessment

It was soon discovered that the market was very poorly defined. The best data available was the shipment data as supplied by the Gas Appliance Manufacturer Association (GAMA). It was determined that the replacement market was cyclical with replacements every five years rather than ten years, as previously postulated by other studies. Also, the major recent growth was attributable to the expansion of commercial building inventory. From an analysis of the data, it was projected that the growth rate of water heater shipments will average 5.0% for the twenty-year period of 1980 to 2000. The largest single market share would be in the 100 to 199 kBtu/h units. The total shipments were estimated for the years 1980 through 2000.

2.2 Development of Product Characteristics and Specifications

This part of the market assessment interacted with the design specification study which was done concurrently. The selection of a gas input rate of just under 200,000 Btu/h was justified and a minimum recovery and/or thermal efficiency of 85% was established. The payback analysis was addressed and additional manufacturing costs allowable over conventional commercial water heaters for a two-year payback were computed. These data are given in Table 1 for two seasonal efficiencies, two costs of natural gas, and three duty cycles.

The current manufacturing cost of a conventional water heater of the 190,000 Btu/h gas input rate is about $339. Assuming a seasonal efficiency of 87%, a cost per therm of 40 cents and an operating on-cycle of 2920 hours per year, the allowable cost increase is $739 for a two-year payback. For an efficiency of 93%, a cost per therm of 50 cents and an operating on-cycle of 5840 hours per year, the allowable cost increase is $1439. The actual manufacturing cost is expected to be much less, so it is anticipated that the highly efficient unit would find a ready market.

2.3 Analysis of Potential Market Share

Assumptions were made that American Appliance Mfg. Corp. (AAMC) would retain market share for the water heater size developed. Unit shipments by AAMC were projected. From the total market segment, it was assumed that AAMC would capture 4.1% of that market, and the number of units shipped for years through 2000 AD was computed. These calculations were used to analyze the implications for energy conservation.

2.4 Analysis of Implications to Energy Conservation

Based on assumptions of market share, the five-year replacement cycle, and other assumptions that market segments would remain substantially unchanged, the implications for energy conservation were assessed. While there are certain inaccuracies in the available data and the assumptions, they are believed to be realistic. They must still be regarded as assumptions which can only be shown to be correct by subsequent observations.

The following conclusions were made:

1. If only the AAMC, MA 199-100 were substituted by the new, more efficient gas-fired, pulse-combustion water heater, the energy saving through the year 2000 would be 0.1 quad.[a]

2. If the entire 100,000 to 199,000 Btu/h market segment were converted, the saving through the year 2000 would be 2.5 quads.

3. If the entry of this unit drives the entire water heater market to the types of efficiencies exemplified by the pulse-combustion water heater, the savings could be in excess of 50 quads.

[a] 1 quad = 10 X 15 Btu

TABLE 1. ALLOWABLE MANUFACTURING COST INCREASES TO PERMIT A TWO YEAR PAYBACK

Operating On Cycle (Hr/Yr)	Seasonal Eff.	E_I (Therms)	Cost of Natural Gas/Therm	Max. Mfg. Cost Increase[a]
2920	87%	1275.7	$.40	$ 739
2920	87%	1275.7	.50	839
2920	93%	1568.3	.40	839
2920	93%	1568.3	.50	939
4380	87%	1913.6	.40	939
4380	87%	1913.6	.50	1039
4380	93%	2352.4	.40	1039
4380	93%	2352.4	.50	1139
5840	87%	2551.4	.40	1039
5840	87%	2551.4	.50	1239
5840	93%	3136.6	.40	1239
5840	93%	3136.6	.50	1439

[a] The current manufacturing cost is $339, so the total manufacturing cost for each can be computed by adding $339 to the cost increase.

Therefore, the risks associated with the program were deemed to be technical risks, not marketing risks. That is, if the technical objectives of the program were met, a manufacturer should be able to sell all that he was capable of producing.

3. TASK 2: TECHNICAL DEVELOPMENT

The Technical Development Task was composed of two subtasks: (2.1) Design Specifications and Proposed Testing Procedures, and (2.2) Tests and Test Results.

3.1 Task 2.1, Design Specifications and Proposed Testing Procedures

The purpose of this task was to describe the specifications that are to be achieved in the production unit, the steps in the technical development that were followed in developing the design, the applicable standards followed, and the testing procedures employed in the course of the effort.

3.1.1 Specifications. The market assessment indicated that the commercial market was dominated by units having gas input rates in the range of 100,000 to 199,000 Btu/h. The higher value was taken as the target with the understanding that the unit must achieve other parameters such as satisfactory combustion efficiency, noise attenuation, and compatibility with the electric controls.

The physical dimensions were selected for the unit's ability to move easily through conventional doorways and to be compatible with standard tank sizes. The maximum outer diameter was taken to be 28 inches, and the maximum height was 78 inches. The nominal volume for the main tank, if a preheater tank was employed, was 100 gallons for a storage-type unit, and less than 50 gallons for an instantaneous tank.

Both the recovery efficiency of the storage water heater and the thermal efficiency of the instantaneous model were targeted at 85% or higher.

The standby loss for a storage model was targeted to be less than 2.97% which would meet the standards set by the State of California.

The installation requirements were the same as the conventional units, but a provision for a water drain was required. In addition, venting could be accomplished directly through a wall since a conventional flue would not be required.

The unit was to conform with applicable standards found in ANSI Z21.10.3-1975, Vol. III, "Circulating Tank, Instantaneous and Large Automatic Storage Type Water Heaters." These defined safety requirements for the construction and performance of the ignition system and control devices. It also defined satisfactory combustion for the water heater as that producing a concentration of CO which was not in excess of 0.04% in the air-free products of combustion.

There was no applicable standard for sound level, but a maximum of 76 dBA was selected to meet expected usage requirements.

The design specifications are summarized in Table 2.

3.1.2 Proposed Testing Procedures. The steps followed in the technical development of the gas-fired water heater (GFWH) are described in this section. These steps essentially involved the studies with experimental models and prototypes, from which performance parameters were obtained.

3.1.2.1 Engineering Models. The engineering models were constructed of pipes, pipe fittings, and other simple hardware. Their purpose included the determination of relative volumes and configurations which provided the necessary performance, the validation of the operation of key components such as the flapper valves, and estimation of heat transfer. Estimates of noise level and the occurrence of operational problems were also determined with experimental models. When questions on design or other problems occurred, they were expeditiously addressed by experiments on the engineering model. Thus some experiments with an engineering model were conducted during the prototype development.

3.1.2.2 Test Setup for Component Design and Selection. The test setup selected was a large tank so that the largest combination of various components could be studied as shown in Figure 1. The initial components fabricated were the coaxial flapper valves, combustion chambers, exhaust decouplers, and associated fittings. Three sizes of combustion chambers and exhaust decouplers were fabricated for initial testing.

The engineering models were assembled and run in the tank to determine the operational parameters as listed in Table 3. The basic diagnostic information obtained were the first five parameters described in Table 3. These were used to determine the physical dimensions described in the last five parameters. Other parameters that were determined included the mixing neck length, distributor head location in the neck, the gap between distributor head and neck wall, the spark ignitor location, and exhaust gas temperature.

The engineering model was instrumented to determine the mean operating pressure in the combustion chamber (P_m), the gas line pressure (P_g), and temperatures of the water and the exhaust gas. Other measurements taken were the gas input rate, CO_2 and CO concentrations in the exhaust combustion gas, and the spacings in the flapper valves. The last gave the orifice areas for the air and gas inlets, which controlled the air-to-gas ratios to the combustion zone.

From experiments with various sizes and arrangements of components, the dimensions for the prototype were selected.

TABLE 2. DESIGN SPECIFICATIONS OF THE PULSE-COMBUSTION GAS-FIRED WATER HEATER

PARAMETER	SPECIFIC MEASUREMENT	STANDARD OR REQUIREMENT
Gas Input Rate	199,000 Btu/hr	Market Penetration
Heated Water Temperature	180°F	Marketability
Physical Dimensions Diameter Height	 <28 in. <78 in.	 Installation
Tank Size Storage Type Instantaneous Type	 100 gallons <50 gallons	 Market Definition
Thermal Efficiency Instantaneous Type	 >85%	 Market
Recovery Efficiency Storage Type	 >85%	 Market
Service Efficiency	>70%	Market
Standby Loss	<2.97%	California Energy Commission
Draw-Off Capacity	>60% of degree-gallon capacity above 120°F	ANSI Z21.10.3-1975, Sec. 2.14
Venting	50 ft. of 2 in. diam. plastic pipe	Market
Ignition	Intermittent	California Energy Commission
Sound Pressure Level (SPL)	<76 dBA at 3 ft. from unit (tentative)	Market

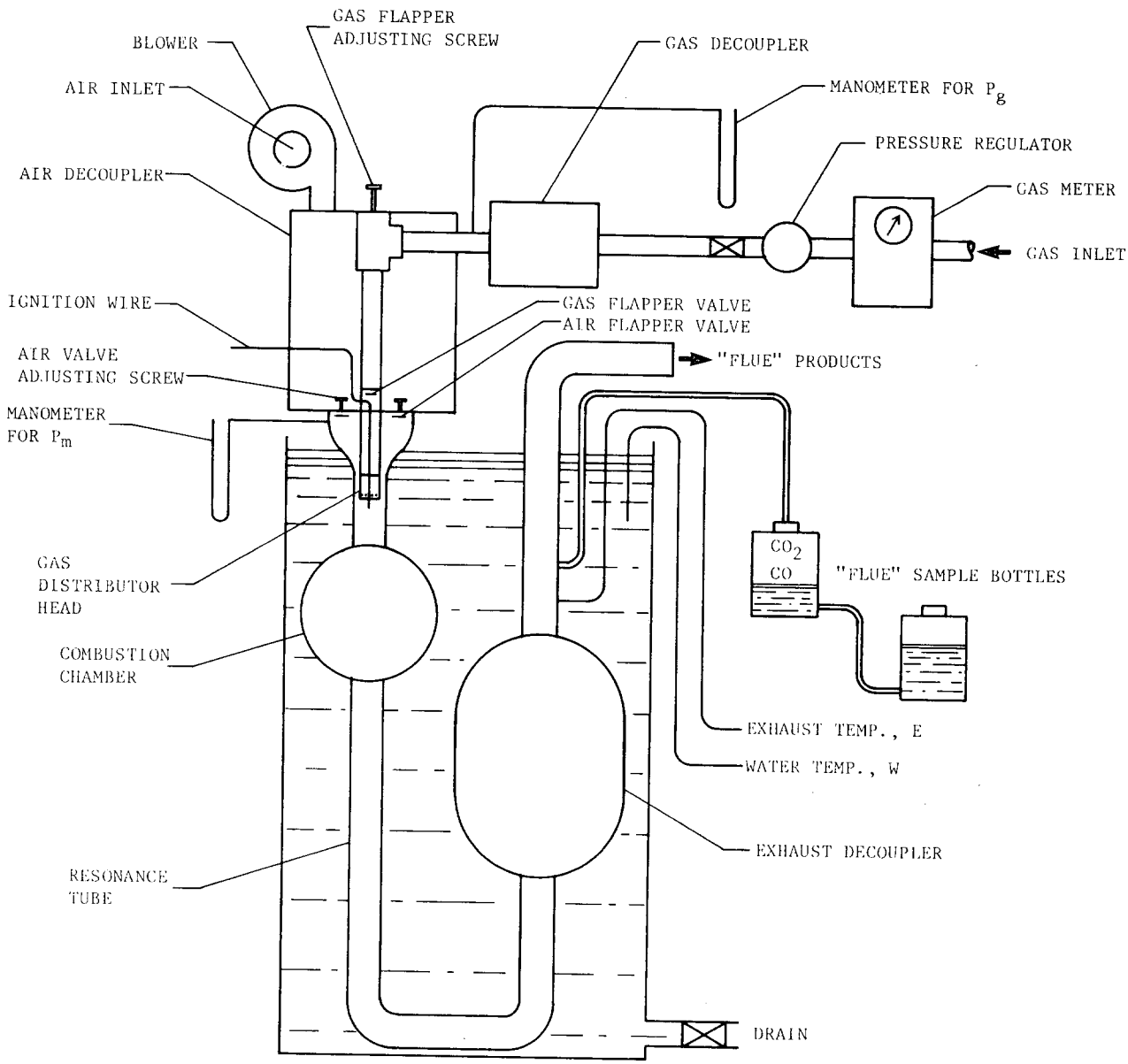

Figure 1. Test Setup for Engineering Model

TABLE 3. OPERATIONAL PARAMETERS FOR ENGINEERING MODELS

PARAMETER	DESIRED INFORMATION	TEST METHOD
1. Gas Input Rate, Btu/h	Starting Rate, Stable Rate	Dry Meter
2. Gas Inlet Pressure, P_g	Operative Conditions	Water Manometer
3. Chamber Mean Pressure, P_m	Operating Values	Water Manometer
4. Combustion Characteristics	Excess Air, CO_2, CO	Luft Infrared Analyzer
5. Sound Pressure Level (SPL)	Noise Level	B & K[a] and Quest[b] Sound Level Meters(SLM)
6. Relative Volumes of Components	Performance, Packaging	Above Parameters (1-5)
7. Valve Adjustments	Flapper Valve Spacings	Combustion Performance, Above Parameters (1-5)
8. Resonator Length	Operational Stability, Frequency, Gas Input Rate	Combustion Performance, Above Parameters (1-5)
9. Air Decoupler Volume	Operational Stability, Gas Input Rate	Combustion Characteristics and SPL
10. Gas Decoupler Volume	Operational Stability, Gas Input Rate	Combustion Performance

[a] Bruel and Kjaer Instruments, Inc.

[b] Quest Electronics

3.1.2.3 Prototype Test Procedures. The prototype, incorporating the design features obtained from the engineering models, was used to test potential production designs. It was assembled into a glassed tank and, when its operation was proven, was sealed into the tank. Controls were then installed and fail-safe operations were attained.

3.2 Task 2.2, Tests and Test Results

The testing and development of the final prototype followed the procedures laid down in Section 3.1.2.

3.2.1 Engineering Model. The engineering model was assembled to obtain the optimum sizes, size ranges and dimensions for the air, gas and exhaust decouplers, the neck, distributor head, and combustion chamber (see Figure 1). A single concentric air/gas flapper valve was designed and fabricated to operate with all of these components. Different dimensions of all of these components were examined in a parametric study to select the basic design information.

The basic design selected as a result of these studies were a 10-in. diam. spherical combustion chamber, a 16-in. diam. spherical exhaust decoupler, a gas decoupler with volume of 141 in.^{3}, neck dimensions of 3 in. i.d. and 7 in. long, and a 2-in. i.d. resonance tube 45-70 in. long. In selecting these dimensions, the guiding principles were to minimize the noise level generated by keeping the peak pressure in the combustion chamber, P_k, at a minimum consistent with maintaining enough power, i.e., mean pressure, P_m, to exhaust the combustion gases effectively. Also, simplicity in design was sought so that the manufacturing costs would be low.

3.2.2 Prototypes. The first prototype combustor was constructed with the above dimensions and had a single resonator tube 54 in. long. This design would have been difficult to manufacture because of the difficulty in bending 2 in. tubing and also the exhaust gas temperature at the decoupler exit was 480°F.

A second nearly identical prototype was built which differed only in that it had four 1-in. diam., 66-in. long resonator tubes instead of the single 2-in. resonance tube. This diameter tubing could easily be coiled by available vendors and, with this combustor assembly, the exhaust gas temperature was dropped to between 126°F to 139°F depending on the temperature of the water being heated. The unit was sealed into an 18-in. diam. tank to become the prototype instantaneous water heater.

The combustion chamber of the water heater was a 10-in. diam. sphere and the exhaust decoupler was a 16-in. diam. sphere. The four resonator tubes were coiled in an intertwined fashion between the two spheres. The neck was 7 in long with a distributor head 5 in. into the neck. The air decoupler volume was 2020 in.^{3}. The overall height of the unit was 74 in. The gas decoupler and starting blower were located inside the air decoupler at the top of the tank.

Automatic controls were installed and the performance was determined. Without external ducting the unit operated at an input rate of 181 to 193 kBtu/h for steady state efficiencies of 88.8 to 91.8% but the noise level was too high for most applications. Without external ducting on the air inlet and exhaust outlet, the SPL was 85 to 86 dBA. With ducting, the SPL was 82 dBA at 39 in. from the unit.

The prototype was then modified by the addition of a small preheater tank at the bottom of the main tank with a secondary heat exchanger installed inside of it. In addition, an acoustic treatment was applied inside the air decoupler. This treatment consisted of redirecting the path of the emitted noise by absorption baffles made of leaded foam, which was also used to cover exposed metal. Together with other modifications, the final SPL was reduced to 75 dBA without ducting and 66 dBA with external ducting. An external muffler reduced this further to 64 dBA.

The addition of the preheater raised the thermal efficiency to 97% with a gas input rate of 185 kBtu/h and operating at a P_g of 1.9 in. w.c. The exhaust gas concentrations were CO_2 = 9%, CO = 0.012% and NO_x = 41 ppm.

4. CONCLUSIONS

The market assessment shows that a pulse-combustion commercial water heater with a gas input of under 199,000 Btu/h would have best chance of capturing a significant market share. Depending on market share captured, between 0.1 to 2.5 quads of natural gas could be saved by the year 2000. The marketability of such a device appears very practical because even a 93% efficient unit at 50 cents per therm could tolerate a manufacturing cost increase of almost 400 percent and still give a pay-back period of only 2 years.

The R&D results show that a gas-fired, commercial pulse-combustion water heater can be constructed to deliver a 97 percent thermal efficiency at a gas input rate of 185 kBtu/h. Noise levels were 75 dBA without ducting, 66 dBA with external ducting, and 64 dBA with an external muffler on the exhaust. Typical exhaust gas concentrations were CO_2 = 9%, CO = 0.012%, and NO_x = 41 ppm at a P_g of 1.9 in.

This unit is ready for production engineering and subsequent on-site engineering evaluations. The same components can be used in a large tank to provide a storage unit.

83R025
Task 1

HIGHLY EFFICIENT COMMERCIAL

PULSE-COMBUSTION

GAS-FIRED WATER HEATER

TASK 1 - MARKET ASSESSMENT

83R025
Task 1

TABLE OF CONTENTS

	PAGE
TABLE OF CONTENTS	i
FOREWORD	iii
ABSTRACT	iv
1. INTRODUCTION	1
2. TARGET MARKET DEFINITION AND ASSESSMENT	2
2.1 PROBLEMS IN MARKET IDENTIFICATION AND MACRO-MARKET ANALYSIS	2
2.2 PROBLEMS IN MARKET IDENTIFICATION - MICRO ANALYSIS	4
2.3 MARKET DEFINITION BY SHIPMENT DATA	4
2.4 ESTIMATES OF COMMERCIAL BUILDING GROWTH	10
2.5 TOTAL MARKET PROJECTION THROUGH THE YEAR 2000	15
2.6 MARKET SEGMENTATION	16
3. DEVELOPMENT OF PRODUCT CHARACTERISTICS AND SPECIFICATIONS	18
3.1 APPROACH TO PRODUCT DESIGN	18
3.2 TRADE-OFF ANALYSIS OF PRODUCT CHARACTERISTICS	19
3.2.1 Definition of Product Characteristics	19
3.2.2 Ranking of Product Characteristics for the Market Balance	21
3.2.3 Selection of Potential Products with Currently Defined Characteristics as a Candidate for Replacement by the New Product	21
3.2.4 Constraints on Trade-offs	22
3.2.5 Analysis of Product Characteristics Under Defined Constraints	23
3.2.6 Trade-off Analysis; Cost to Product Characteristics	25

TABLE OF CONTENTS

PAGE

3.3 PAYBACK ANALYSIS OF ENERGY SAVINGS AND ITS EFFECT ON MARKETABILITY OF THE PULSE COMBUSTION WATER HEATER..... 27

3.4 THE RELATIONSHIP BETWEEN PAYBACK AND MANUFACTURING COST..... 28

3.5 PRODUCT CHARACTERISTICS AND CONSTRAINTS..... 35

4. ANALYSIS OF POTENTIAL MARKET SHARE..... 37

4.1 RELATIONSHIP OF TOTAL MARKET TO MARKET SHARE..... 37

4.2 UNIT SHIPMENT ESTIMATES FOR THE MA 199-100..... 38

5. ANALYSIS OF IMPLICATIONS TO ENERGY CONSERVATION..... 40

5.1 THE RELATIONSHIP BETWEEN UNITS INSTALLED AND ENERGY CONSERVATION..... 40

5.2 ANALYSIS OF IMPLICATIONS TO ENERGY CONSERVATION..... 42

6. CONCLUSIONS..... 42

7. REFERENCES..... 46

83R025
Task 1

FOREWORD

This Marketing Assessment was written under the auspices of the Oak Ridge National Laboratory, operated by Union Carbide Corporation, Nuclear Division, for Subcontract No. 86X-24711C. The assistance of Mr. W. L. Cooper, Jr., Technical Monitor for this effort is gratefully acknowledged. His assistance in securing reference material contributed significantly to the outcome of this effort.

Further, the support of American Appliance Mfg. Corp. (AAMC) in data collection and advice, has given a great deal of substance to the market projection. The contribution by Mr. Bernard Brown, Vice President of Marketing and his staff has made it possible to deal from a reasonable factual base to derive the information presented.

The support of the internal staff at Shock Hydrodynamics must also be recognized as making major contributions to the final outcome. Especially noted are the contributions of Mr. Leo F. Polak for the computer program and runs, and Dr. Emil A. Lawton for sound technical advice and assistance in developing many aspects of this report.

Finally, the assistance of the Gas Appliance Manufacturers Association in furnishing data assistance, is especially appreciated. Mr. John P. Langmead and Mr. Frank Stanonik made very important contributions to the overall effort.

This task was completed and is presented in the context of vigorous AAMC marketing of the pulse-combustion water heater. However, for nontechnical reasons, AAMC withdrew from participation in the project at about the time when most of the development was completed for the instantaneous unit.

83R025
Task 1

ABSTRACT

A market assessment is made for a commercial pulse-combustion gas-fired water heater. Included in the study is an identification of the market segment where maximum energy savings can be derived; development of preliminary specifications for a product capable of capturing a share of the identified market segment; estimates of unit shipments possible for the new product, through the year 2000; payback analysis for the new product utilizing a computer program developed to contrast cost of production to consumer payback; estimates of energy savings through the year 2000, assuming replacement of current in-place units with the new product; and a definition of the requirements for success of the marketing effort of the commercial pulse-combustion gas-fired water heater, as well as the trade-offs which will be encountered in the development of this new product. The report concludes that the product concept is very marketable, and paybacks developed are acceptable for the new product specifications developed.

The report also develops a justification for assuming a five year replacement cycle for commercial water heating equipment. The results of the market analysis indicate a 5.6% average growth projection for commercial buildings, and the report indicates that the cyclical nature of the commercial water heater market has a strong correlation to the decline and rise in commercial building inventory over the past ten years.

1. INTRODUCTION

This task report summarizes the results of a market survey performed jointly between the Shock Hydrodynamics Division of Whittaker Corporation and American Appliance Mfg. Corp., to investigate the commercial gas-fired water heater (CGFWH) market and identify the sector of that market which will provide the best potential for market penetration of a new, highly efficient, commercial gas-fired water heater. Incorporated in this survey is the introduction of the program objectives, under which the study was undertaken, i.e., to accelerate the near-term potential for reduction and conservation in the usage of natural gas to heat water in the commercial sector.

This report is divided into four major sections:

1. Target Market Identification and Assessment.

2. Development of Product Characteristics and Specifications.

3. Analysis of Potential Market Share.

4. Analysis of Implications to Energy Conservation.

The methods utilized in the production of this report include:

> Personal contacts between the authors and several major role players in the commercial water-heating market (including gas utilities, the American Gas Association, The Gas Appliance Manufacturers Association, distributors of commercial water-heating equipment, and users of commercial water-heating equipment), and literature search on the types of data available regarding the commercial water-heating market.

Of the two methods employed, the literature search effort has had the best results. However, it readily becomes apparent that the participants in this market have very little specific knowledge about the market place. The standard correlations which are found in many research efforts are not to be found for that market. Such basic questions are:

1. Who are the consumers of the products?

2. How large is the market?

3. How is the market defined?

4. What are the major user locations for the products?

All remain unanswered and throw obstacles in the path of data collection.

This puts inherent quantitative constraints on any market analysis which must therefore be more qualitative in its estimates about the market and its structure, size and energy usage.

Where statistical methods are employed, they are defined, and where subjective estimates are given, we attempt to define the derivation and the assumptions used to reach the estimates.

2. TARGET MARKET DEFINITION AND ASSESSMENT

2.1 Problems in Market Identification and Macro-Market Analysis

The major objective of this market study is to define areas of opportunity for American Appliance Mfg. Corp. (AAMC), to capture or maintain market shares in the commercial gas-fired water heater market. The accomplishment of capturing and holding market shares by any manufacturer will be very much dependent on where the product lies on a continuum termed "the product life cycle." As a new and innovative idea progresses from the inventor's mind to the first consumers, one type of marketing strategy is employed to capture market share from other competing products. Once the product begins to mature, the marketing strategy shifts to maintain market share against competitive products. Naturally, there is a whole glossary full of terms in marketing texts which define subtle changes in the products environment and the marketing strategies to cope with them. The basic premise which prevails across all these subtleties is that market information is needed and derived in order to develop marketing strategies. The strategies are revised as needed to react to the marketing environment. In this particular study, the market information is necessary to help derive both the standard product strategy and the energy-savings implications of that strategy.

The CGFWH market encompasses a wide range of products, numerous different end users, and a vast number of different types of buildings. All these are located in a wide range of climatic zones and operating conditions imposed by installation locations. As the literature is reviewed, it soon becomes apparent that each report, depending on its end objective, will define the term "commercial user" in a different manner, and utilize different assumptions about the market. Some reports reviewed defined it by Standard Industrial Code (SIC) with various different adjustments; some define the market as it relates to types of buildings; and still others employ a matrix combination approach giving innovative definitions which adhere to some subjective requirements of the information gathering processes.

Unfortunately, much of the work that has been done on the commercial sector of the economy, as opposed to the residential or industrial sections, has no quantifiable correlations between the numbers presented by researchers and the number of gas-fired water heaters being used. As an example, the recent reports from Oak Ridge National Laboratory (ORNL) on commercial energy demand[1], and

commercial energy use[2], provide interesting information on sample demand patterns for energy in the commercial sector and the types of buildings involved in consumption of energy, as they relate to end uses (of which water heating is defined as one). But, for product marketing purposes, the manufacturer needs to know a different type of information which these reports were not structured to provide.

Specifically, the manufacturer must know which water-heating products are installed in what type of commercial buildings in order to make proper assumptions about product mix through statistical methodology in comparison to data. The "how many questions" are seemly impossible to address in the formatting of these particular reports. From these reports, it is apparent that the ORNL model indicates a decline in natural gas usage for water heating with the implementation of the proposed new building/product standards now being considered. There is still a great deal of uncertainty about the effects of standards because of uncertainty about the national distribution of buildings by size, number of stories, geographic location, and types.[1] This uncertainty about specifics makes it difficult to approach a comparison between energy usage and some quantifiable expression of water heating capacity. The relationship between the number of water heaters and total energy usage expectations also is impossible to establish.

After numerous false starts along possible paths of information, it is readily apparent that lack of available data on the specifics of commercial water heating market will preclude possible indexing and segmenting of the market with macro-economic indicators, as is done in many consumer market forecasts.

The lack of data can be primarily attributable to several factors:

a. The lack of any data base on commercial water heating installation and usages.

b. The volatility of the commercial sector of the economy in terms of end usage as it relates to any specific location or types of water heating equipment. (Constant turnover in small business.)

c. The lack of a concise agreement between various researching agencies on the contributors to the commercial sector of the economy.

d. The lack of relevant information on consumption patterns for hot water in the commercial sector.

Since these problems dictate that any macro-market forecasting about commercial water heating requires an extensive market research effort, which far exceeds the level-of-effort for this study, the next logical step is to approach the market identification-definition problem from the micro-analysis point of view.

2.2 Problems in Market Identification - Micro Analysis

It would seem on the surface that to analyze the market for AAMC, utilizing a micro approach, would be relatively simple. They currently produce a broad range of products for the commercial water-heating market. The most immediate question to build a market definition from a micro-approach is to begin with the consumers of AAMC products. When the questions about consumption patterns are posed, it is learned that AAMC has no real contact with the ultimate consumer (user). They deal through a system of distributors and over 200 brands which are ultimately retailed to commercial customers by plumbing supply stores, plumbing jobbers, department stores, hardware stores, etc. If the analysis is carried to these distribution outlets and questions asked about the end use of the product after it is retailed (again seeking any potential correlation to other data), they can only address the question on a subjective level as to potential types of installation. The distributor has no information on specific numbers of installations or knowledge of the usages for the equipment they sell and install. The retail outlets have even less usable information because a great deal of their business is cash and carry.

A similar approach to utilities was tried in the hope that they would maintain a data base on commercial gas usage in the local area in order to establish a consumer sample, but, it also proved unsuccessful. The utilities are just beginning to approach the data collection problem about commercial natural gas usage and users. Some limited studies have been conducted in the fast-food industry by Southern California Gas Company but they have only scratched the surface of the consumer profile, which may ultimately result from recently enacted Federal Reporting Requirements. Until these requirements, the utilities did not see a need to invest in expensive data collection about commercial users and their consumption patterns. Due to the complexity of the problem, the data collection system will need to be sophisticated to handle the "volatility" in the commercial business area, which was annotated earlier as a major problem in macro-analysis. Any data base is still years away in the opinion of the utilities.

All the investgation, literature search, and personal contacts point to shipment data as the best single indicator of quantitative data on the size of the commercial water heating market.

2.3 Market Definition by Shipment Data

The result of the previous efforts as defined in the earlier sections is to direct the market analysis back to the best single source of data on shipment of gas appliances, the Gas Appliance Manufacturers Association (GAMA). The data provided by this trade organization is the sole source for market size estimates for many different gas appliances. In our contacts with Mr. John Langmead, he has provided the one source of quantifiable data about the potential total population of commercial water heaters. The shipment data obtained is presented in Table 1[3]. The data presented represents approximately 90%[4]

of the total shipments by manufacturers for the years indicated. GAMA is attempting to validate their data as a percentage of total shipments but have currently only done so in the residential area.

TABLE 1. GAMA SHIPMENT DATA[3] 1970-1979

Commercial Gas-Fired Water Heaters
Shipments in Units

Year	Shipments
1979	254,314
1978	228,131
1977	181,974
1976	143,854
1975	118,963
1974	136,148
1973	161,759
1972	157,925
1971	118,533
1970	101,054

The one critical factor, which remains a contested issue in the projection of total market size by shipment data, is the service life of a commercial water heater. In a recent report by Science Applications, Inc. (SAI) for the Gas Research Institute[5], the service life for commercial water heaters was set at ten years. Table 2 presents the summary data from the SAI report about commercial water heaters, and the ranking of various conservation efforts in the commercial water heating usage. Since this factor is critical to the market size estimation, and since the subjective feeling of AAMC is that ten years is far too long for their specific product lines, the original report from Thermo Electron Corporation[6] which was utilized by SAI for their service life, was reviewed for relevance to the AAMC product line. The conclusion reached, in this report, was based on a random sample of manufacturers, which had no justification either for, or against the ten-year figure; only consensus.

TABLE 2. INFORMATION ON COMMERCIAL WATER HEATERS[5]

Items Needed to Determine Rankings of Different Design Options	Design Options		
	Electric Ignition and Flue Closure	Power Burners and Electric Ignition	Pulse Combustion and Electric Ignition, Condensing
Total Annual Natural Gas Consumption (quads/yr)		0.54	
Appliance Inventory (10^3 units)		805.7	
Annual Natural Gas Consumption Per Unit (10^6 Btu's/unit-yr)		670	
Appliance Service Life (yr)		10	
Decrease in Annual Natural Gas Consumption (%)	3.0	16	28
Annual Natural Gas Savings, Ultimate (quads/yr)	0.016	0.086	0.15
Change in Consumers' Initial Cost ($)	150	550	1150
Change in LCC ($)	-666	-3800	-6460
Payback Period (yr)	2.0	1.4	1.7

In a more recent report for ORNL, "Energy Conservation Opportunities in Commercial Appliances"[7] by Thermo Electron Corporation (TEC), the estimate of appliance inventory for 1980 of commercial gas water heaters was set at 926,500 units utilizing a technique of forward extrapolation and a constant market growth, rates from 1975 data, as well as the ten years' replacement assumption. They also projected annual sales to be 71,200 units. However, the GAMA shipment data indicates a considerably higher shipment rate/annual sales in units for this period. In the first six months of 1980, 117,807 units were shipped. In 1979, a total of 254,314 units were shipped.

If the total inventory figure derived by TEC is representative of total market size, then the inventory only contains shipments back to 1974 by reverse extrapolation. This means a replacement every five years instead of the ten years used by SAI and postulated by TEC. GAMA shipments from 1974 through 1979 were 927,236 units ±10%. A five-year replacement is indicated by the GAMA shipment data as it relates to the total market rather than the ten-year replacement previously used by SAI and postulated by TEC.

If the five-year replacement assumption is correct, a contraction in total shipments would be expected in 1980 as it compares to 1979 total shipments. Included in this hypothesis is the assumption that a majority of the units shipped are for the replacement market. As a validation for this assumption, the first half of 1979 is compared to the first half of 1980 shipments. The total shipments are down 18,260 units. When this is compared to 1969 shipment data for the ten-year assumption, a downturn is also predicated from the ten-year replacement postulated by TEC. However, the difference between 1970 and 1969 shipments is only 5,091 units total for the year. If the shipment data is further reviewed, a constant growth is seen from 1971 to 1973, followed by a decline again, and upturns that seem to have a frequency of 5 years for as long as the shipment data has been kept.

Obviously, the decline in shipments can also be due to other effects, which may be related to the general economic condition of the country, and more specifically, the commercial building industry. The graph presented in Figure 1, presents an interesting correlation between GAMA shipment data in units, and commercial building investment in dollars. (It would be advantageous to include commercial building starts in the analysis but attempts to get the information from F. W. Dodge Co. have proven unsuccessful.) The information presented in Figure 1 on commercial building investment is taken from the "Statistical Abstracts of the United States."[8]

Although the correlations between the data presented in Figure 1 are subjective, the results graphed do say some interesting things about the commercial water heating market. First, there is a strong indication by statistical inference that a relationship exists between the factors presented in Figure 1, although the uncertainty in the actual numbers and sample sizes precludes the use of statistical methodology in the normal sense. Second, the unit shipment curve acts as an indicator of what will be the trend in the commercial building inventory. Considering the requirement that new-building water heater purchases precede the new-building entering the inventory, this might be expected. However, uncertainty over the mix between new and replacement, in the total market again limits the usage to subjective interpretation. Third, if the low points in these curves are analyzed, the frequency of low points is related to periods of economic downturn although laggered, and that frequency appears at 5-year intervals. And, finally, the major recent growth in the shipment of commercial water heaters is attributable to the expansion of commercial building inventory, especially in the period 1975 to 1979.

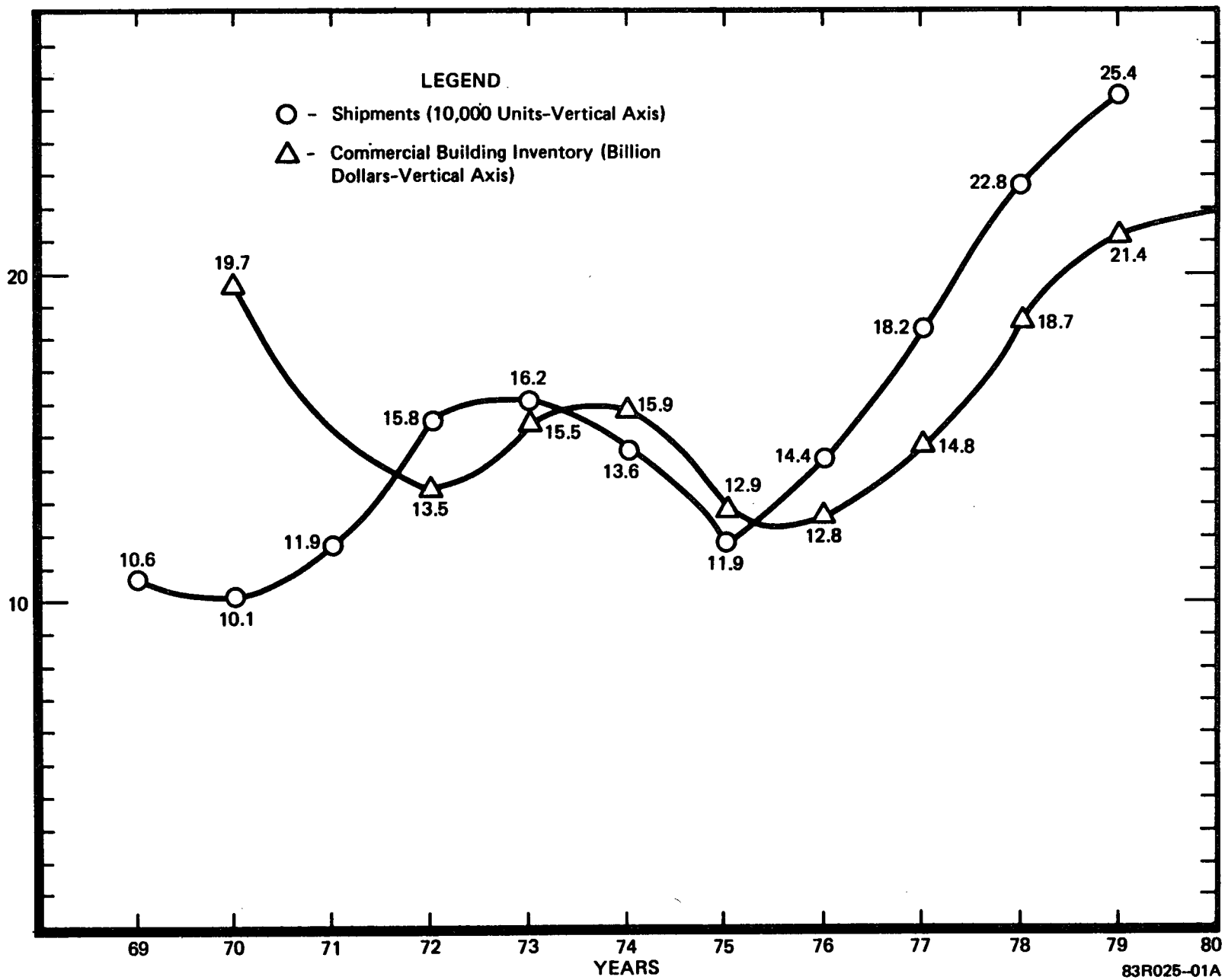

Figure 1. Commercial Water Heater Unit Shipments and Dollar Value of Commercial Building Inventory (Ref 8)

The primary reason for structuring these curves is to derive a hypothesis about the replacement cycle assumption. With this data graphed, our interpretation is that with the steep decline in commercial building inventory in the 1969 to 1970 time frame, the majority of the units in those years were replacements. Beginning in 1971, new building was underway again, but did not appear in the inventory until late 1972 or early 1973. This growth continued on into 1974. The commercial building inventory begins to decline again in 1974 to 1975 while unit shipment data began its decline in 1973-74, one year earlier. Unit shipment bottoms out again in 1975, followed by commercial inventory one year later. The 1975 figure is also interpreted to be replacements, and is very close to the 1971 figure. The significant years to this interpretation are 1980 and 1981. If the interpretation is correct, 1980 will be a lower shipment year for commercial water heater manufaturers, as compared to 1979. 1981 should see an upturn prompted by the replacements of 1976, provided the commercial building inventory continued to grow at a constant rate, as it has done in recent years. If the commercial inventory growth rate flattens out, or turns negative, commercial water heating unit shipments will continue to decline to approximately 150,000 units in 1981. Shipments will then begin to grow again until the 240,000 unit mark is exceeded in 1984.

In a practical sense, AAMC has experienced economic downturns and knows the lag effect associated with such downturns, as they relate to new building activity. Since the commercial building inventory has grown at a 16% (not adjusted for inflation) rate between 1975 and 1979, and provided the subjective relationship is correct, the growth in commercial water heaters should be similar. In fact, the growth in water heater shipments is 21% for the same period (multiple installations often occur because of sizing and ASME requirements on large equipment). However, through the month of August, commercial water heater sales are down 16% for 1980, approximately the same amount they were down in 1974-75 time frame when they were off 14%. The 1969-70 or any other period does not approximate this. Further, indications are that commercial building activity is continuing, although the rate of growth or decline in inventory is impossible to determine at this time. The data for 1979 is not even available yet, due to its proprietary protection by F. W. Dodge. The 2% difference between the 1974-75 shipment decline, and the current trend in 1980, may be interpreted as an indication of downturn in the commercial inventory in 1981. This might also be predicted from the replacements. If so, the question of replacement cycles is critical to commercial water heater manufacturers who will need to trim production even more during 1981, to accommodate the decline in shipments to either 1976 replacement levels or 1971 replacement levels. AAMC believes in a 5-year replacement cycle and programs their production accordingly, while carefully monitoring orders to determine any significant trends or change in the market place.

2.4 Estimates of Commercial Building Growth

The analysis of this market must also take into account one other factor which is critical to the overall market projections. This factor is commercial building addition prospects. In a recent report prepared by ORNL entitled "Commercial Energy Use: A Disaggregation by Fuel, Building Type, and End Use"[1], figures are developed for the national stock of floor space for one clearly defined commercial sector. In the study stock estimates are derived for ten building types for the years 1925 to 1975. The commercial model employed is calibrated for 1970, and evaluations of the floor space estimates were directed at 1970. Detailed methodology is given in Reference 1. Although clearly representing only a sample of commercial floor space, the study defines the F. W. Dodge methods of data collection and the seven Dodge building categories. These seven building categories are all of interest to the marketing plan for commercial water heaters but are by no means the only potential installation sites for the equipment being marketed by AAMC.

The seven Dodge building categories considered by the report are:

Commercial - Stores and other mercantile buildings (shopping centers and restaurants), office and bank buildings, commercial garages, and service stations.

Educational - Public and private school buildings (elementary, secondary, higher education, and related buildings).

Hospital and Institutional - Public and private hospitals, other health treatment buildings, and related buildings.

Public - Federal, state and local public administration buildings, penal and correctional buildings, post office buildings, and police and fire stations.

Religious - Houses of worship and religious training buildings.

Social - Bowling alleys, theaters, and auditoriums.

Miscellaneous - Passenger terminals, freight terminal buildings, hangars, and other miscellaneous nonresidential and nonindustrial buildings.

It must be pointed out that a validation of the Dodge data is impossible due to the lack of public information and the relative proprietary nature of collection techniques. Through analysis of cross-section stock estimates and derived estimates for additions, ORNL assigned a probable correctness factor of $\pm 10\%$ to $\pm 15\%$ to the information provided by F. W. Dodge. Several other data manipulation problems are also discussed which require a great number of assumptions to complete the desired model. Among the assumptions employed were

pre-1924 estimates by building types; the decay rate for each building type; and the building additions for 11 western states are not covered by Dodge until 1956 (estimated by ORNL to be 20% of the total national additions in the 1950's). All of these assumptions are complex and require that a multitude of variables be taken into account. These variables are extensively discussed in the reference.

The results of the study are presented in Table 3 (following). As can be seen, the study indicates a steady growth in commercial floor space from 1925 to 1975.

On the surface the commercial square footage data would tend to contradict the data on dollars of commercial inventory presented earlier from the data in Reference 8. However, it should be pointed out that the disaggregation approach will, due to its methodology, smooth the amplitude of change between the contributing years, while the comparable dollar inventory figure is susceptible to inflation, variation in value interpretation, and induced fluctuations due to accounting and reporting practices. There is no indication that dollar valuation of inventory will provide a better fluctuation indicator for new addition growth rates than commercial square footage. Also, the data reports are both from the same source.

In Table 4 the actual growth rates and expected growth rates for the seven Dodge categories are presented as defined in a follow-on report to Reference 1 entitled "The Commercial Demand for Energy A Disaggregated Approach."[2]

TABLE 4. BUILDINGS GROWTH RATES[2]

Building Type	Actual Growth Rates (%)			Forecast Growth Rates (%)
	1950-73	1960-73	1968-73	1974-2000
Commercial	4.10	4.85	5.35	5.68
Educational	5.16	4.25	4.00	2.80
Health	4.10	4.37	4.32	4.79
Public	3.94	3.72	3.07	2.18
Hotel-motel		1.42[a]	1.28	0.80
Miscellaneous	2.98	2.46	3.10	2.98
Religious	4.04	2.48	2.55	1.92
Total	3.51	3.59	3.53	4.34

[a] Growth rate based on 1965-1973.

TABLE 3. ADDITIONAL COMMERCIAL STOCK SERIES
(10^6 ft^2)

Year	Commercial	Office	Retail Wholesale	Garage	Warehouse	Educational	Public	Hospital	Religious	Hotel-Motel	Misc.	Total Commercial
1925	3,444	-	-	-	-	2,136	273	531	450	-	782	7,640
1930	4,013	-	-	-	-	2,312	321	599	501	-	883	8,678
1935	3,966	-	-	-	-	2,282	384	608	494	-	889	8,662
1940	4,101	-	-	-	-	2,387	447	652	502	-	1,071	9,114
1945	4,287	-	-	-	-	2,406	488	732	506	-	1,498	9,957
1950	4,731	-	-	-	-	2,683	512	888	594	-	1,681	11,123
1955	5,275	-	-	-	-	3,359	585	1,028	795	-	2,049	13,071
1960	6,328	-	-	-	-	4,203	720	1,175	972	-	2,368	15,801[a]
1965	7,767	2,851	3,163	375	1,381	5,049	870	1,413	1,185	1,237	2,650	20,269
1966	8,139	2,957	3,328	404	1,953	5,258	899	1,462	1,221	1,293	2,718	21,023
1967	8,489	3,037	3,496	433	1,526	5,961	928	1,416	1,254	1,313	2,782	21,777
1968	8,910	3,164	3,676	466	1,605	5,659	959	1,574	1,204	1,337	2,853	22,602
1969	9,404	3,313	3,891	501	1,700	5,833	985	1,648	1,306	1,360	2,936	23,506
1970	9,849	3,452	4,084	531	1,784	5,985	1,002	1,705	1,324	1,369	3,000	24,252
1971	10,316	3,614	4,278	554	1,869	6,126	1,034	1,771	1,339	1,378	3,071	25,061
1972	10,868	3,769	4,535	583	1,982	6,239	1,062	1,840	1,356	1,407	3,136	25,934
1973	11,491	3,940	4,837	601	2,114	6,339	1,100	1,900	1,372	1,425	3,225	26,883
1974	12,009	4,088	5,088	609	2,224	6,766	1,134	1,962	1,388	1,445	3,311	27,745
1975	12,327	4,180	5,241	618	2,291	6,564	1,168	2,010	1,405	-	3,383	28,328

[a] Total floor space figures prior to 1960 do not include Hotel-Motel floor space. (Extracted from Reference 2)

In Table 5 the growth rate in commercial building inventory value is calculated for the years 1972 to 1979 to provide a comparison.

TABLE 5. CALCULATED GROWTH RATE % OF $ IN COMMERCIAL INVENTORY

1972 to 1973	14.7%
1973 to 1974	3.2%
1974 to 1975	-24.5%
1975 to 1976	0%
1976 to 1977	15.9%
1977 to 1978	25.6%
1978 to 1979	15.2%
Mean -	7.16%
Standard Deviation -	16.37

Other statistics of importance to commercial inventory growth are population growth and income growth. Over the period 1970 to 1980, the population grew at a rate of 9.32% (1980 population estimated at 228 million). Further, from Reference 2, information disposable income increased 20.7% over the same period. Since no real index exists for the inflation in costs per square foot of commercial buildings, the removal of this variable from the total dollar growth rate presented above, in order to place the total inventory dollars and a constant dollar base, is difficult. In order to get some indication, selected SIC code inputs to commercial building were analyzed. These codes are:

SIC	INDUSTRY DESCRIPTION
1442	Construction Sand and Gravel
2892	Explosives
3251	Brick and Structural Clay Tile
3271	Concrete Block and Brick
3273	Ready Mix Concrete
3317	Steel Pipe and Tube
3431	Metal Plumbing Fixtures
3498	Fabricated Pipe and Fittings
3534	Elevators and Moving Stairways

In addition, certain census product classes were given consideration:

CENSUS CODE	
24212	Dressed Lumber
24313	Window and Door Frames
24314	Doors, Wood (Panel and Flush Type)
24316	Finished Wood Moldings
29510	Paving Mixtures and Blocks
32111	Sheet (Window) Glass

CENSUS CODE (Continued)

32511	Brick
32530	Clay Floor and Wall Tile
32710	Concrete Block and Brick
32730	Ready Mix Concrete
33124	Hot Rolled Steel Structural Shapes
34294	Builder's Hardware
34310	Metal Plumbing Fixtures
34422	Metal Window Sash and Frames
34424	Metal Doors

Since our objective is only an indication of inflation for commercial building, the methodology for indexing shall assume equal relative weighting between factors. To correct the commercial building inflation index for contribution margin in this particular circumstance would be too time consuming and most likely difficult to validate. The results are summarized in Table 6 for the 10 years 1970 to 1980 (July 1980 data). The SIC Code Industries and Census Code Products were selected for their direct applicability to commercial construction and their continuity of data over at least 10 years. If we then use the inflation factors thus derived to adjust the commercial inventory in dollars for each year we get the results shown in Table 7.

TABLE 6. ESTIMATED COMMERCIAL BUILDING INFLATION FACTOR

Year	1971	1972	1973	1974	1975	1976	1977	1978	1979	6 mos. 1980	10 Year Average
Mean %	5.38	4.82	10.62	15.24	13.03	5.71	7.56	9.68	9.62	8.85	12.30%

TABLE 7. CONSTANT DOLLAR AND ESTIMATED REAL GROWTH
(MILLION $)

Year	Inventory[9]	Constant Dollar Adjustment	Estimated Real Growth
1972	13,464	12,845	8.8%
1973	15,463	13,970	(1.9%)
1974	15,944	13,836	(18.9%)
1975	12,806	11,330	6.5%
1976	12,756	12,067	13.9%
1977	14,783	13,744	23.2%
1978	18,565	16,927	15.3%
1979	21,400 Est.	19,522	-
		Mean -	6.83%
		Standard Deviation -	13.64

The estimated real growth is the change between constant dollar inventories.

The forecast growth rate from Table 3 presented earlier for the period 1974-2000 was an average 4.34% based on square footage. When compared with the constant dollar growth rate the results above indicate that the growth rate will probably lie between this 4.34% and 6.83%. Subjectively this would mean a growth percentage of 5.6% based on a comparison average between these two approaches. Which approach is more subjectively correct is not important; only the resultant estimate of growth rate for the commercial building sector, which will be utilized to develop the market projection. In additon, since certain markets such as multifamily residences and industrial users are not included, it seems logical that for projection purposes, the growth would exceed a pure commercial square footage growth rate for this product.

The only statement which can legitimately be made is that the inventory appears to be cyclical and that on an average a positive growth in the commercial sector of buildings can be expected. For the purposes of this study we have selected a subjective value of 5.6% growth for the commercial gas-fired water heater market.

2.5 Total Market Projection Through the Year 2000

Utilizing the subjective assumptions that have been derived, Table 8 gives the projected total market by year through the year 2000 for commercial water heaters. The assumptions are as follows:

1. The total market is determined from the GAMA shipment data to be 927,236 units for 1979. (Sum of 5 years shipments.)

2. The replacement cycle for a commercial water heater is 5 years.

3. The growth rate for water heater shipments will average 5.6% over the 20-year period 1980 to 2000.

4. The average retirement of buildings and new construction inputs differ by only a 5.6% growth factor each year.

TABLE 8. COMMERCIAL GAS-FIRED WATER HEATERS SALES PROJECTION TO YEAR 2000

Year	Total Market	New Construction	Five Year Replacement	Year Sales
1979	927,236	118,166	136,148	254,314
1980	1,007,236	80,000	118,963	198,963 Est.
1981	1,063,641	56,405	143,854	200,259
1982	1,123,205	59,564	181,974	241,538

TABLE 8. COMMERCIAL GAS-FIRED WATER HEATERS
SALES PROJECTION TO YEAR 2000

(Continued)

Year	Total Market	New Construction	Five Year Replacement	Year Sales
1983	1,186,104	62,899	228,131	291,030
1984	1,252,528	66,422	254,314	320,736
1985	1,322,669	70,141	198,963	269,104
1986	1,396,738	74,069	200,259	274,328
1987	1,474,955	78,217	241,538	319,755
1988	1,557,552	82,597	291,030	373,627
1989	1,644,775	87,223	320,736	407,959
1990	1,736,882	92,107	269,104	361,211
1991	1,834,147	97,265	274,328	371,593
1992	1,936,859	102,712	319,755	427,467
1993	2,045,323	108,464	373,627	482,091
1994	2,159,861	114,538	407,959	522,497
1995	2,280,813	120,952	361,211	482,163
1996	2,408,539	127,726	371,593	499,319
1997	2,543,417	134,878	427,467	562,345
1998	2,685,848	142,431	482,091	624,522
1999	2,836,256	150,408	522,497	672,905
2000	2,995,086	158,830	482,163	640,993

2.6 Market Segmentation

The total CGFWH market can be broken down into eight market segments for projection purposes when the GAMA shipment data is used. These segments are nominally grouped by the Btuh rating for each unit grouping and/or type of equipment. The data base used for interpretation of the respective segments is not expanded to reflect industry-wide figures so it must be interpreted as a sample of the total years shipments. Also, AAMC does not report these figures to GAMA so their figures are not included. The segments of interest to the study are those that apply to product lines which AAMC currently markets which are the 72,000 to 525,000 Btuh sizes for commercial gas-fired water heaters. Therefore, our interest for sales projection purposes should concentrate in the product line regimes of AAMC which correspond to only certain market segments as defined by the GAMA data.

The information will further be limited to a 5-year data collection since the total market assumption uses a 5-year replacement assumption. Table 9 presents the GAMA data by 4 major segments which are significant to this study since they define products which are currently being marketed by AAMC. It is also important to ascertain the product which can contribute the largest number of unit conversions, either by replacement or new entry, for energy savings purposes.

TABLE 9. COMMERCIAL GAS-FIRED WATER HEATERS BY MARKET SEGMENTS
(000's Btuh)

Year	75-99	100-199	200-299	300-500	Total Sample	Total Market (Expanded)
1979	24,009	40,998	22,441	14,268	126,304	254,314
1978	23,768	36,148	21,557	14,828	123,096	228,131
1977	19,698	30,049	18,360	15,445	104,527	181,974
1976	14,937	27,279	16,430	10,331	77,523	143,854
1975	14,168	20,693	16,239	6,052	63,451	118,963

When this data is contrasted with the actual shipment data of AAMC for the same period, actual market share determinations can be made for these specific segments. This data is presented in Table 10. From the data in Table 10 it is readily apparent that the initial product should be either in the 75-99,000, 100-199,000, or 200-299,000 Btuh input range since they are the market segments which offer the largest potential market and highest potential for dissemination of the technology.

TABLE 10. 1979 MARKET SHARE BY AAMC (MARKET SEGMENTS)
FIVE YEAR SUMMARY
(000's Btuh)

75-99	100-199	200-299	300-525	Total Market Share %
17.22%	11.09%	10.07%	2.72%	11.43%

3. DEVELOPMENT OF PRODUCT CHARACTERISTICS AND SPECIFICATIONS

3.1 Approach to Product Design

The approach to product design involves the evaluation of a multitude of variables which affect buyer acceptance. In order to meet the objective of this program to develop a CGFWH that is significantly more efficient than existing appliances on the market, and insure that the widest buyer conversion and acceptance is obtained, the survey of the total market was developed in Section 2. This development indicates that the three largest market segments are the segments utilizing equipment with an input rate of 75-99,000 Btuh followed closely in size by equipment with an input rate from 200-299,000 Btuh and 100-199,000 Btuh. Therefore, the products to be considered in this section are to be in one of these three input ranges in order to enhance the overall program objective.

As an initial step in product design, a review of the potential buyers was also conducted and reported in Section 2. Broadly speaking, these buyers can be grouped into two distinct categories: a) The new construction market; b) the replacement market (includes retrofit units). Of the two categories the replacement market appears to be the largest and the most predictable. The two categories are motivated by certain perceived product characteristics which are outlined in Table 11 for the proposed pulse-combustion water heater. Since a complete weighting scheme for product characteristics involves extensive sampling of users, it was not attempted. However, a subjective weighting of product characteristics is important, since all of these product characteristics act together and not independently. The optimum product design will incorporate as many characteristics as possible in a positive mode as perceived by any specific group of buyers. Since any CGFWH must address both categories of buyers, new construction, and replacement, no acceptable product design can include a characteristic which might jeopardize buyer acceptance in either of these categories.

Since the product characeristics act in consort or form consumer characteristic sensitivity couplets, the perception on an average of product characteristics by each consumer category as they interact becomes the single most important component of product design. In order to better allow for these sensitivity couplets a trade-off analysis of the important product characteristics was performed and is referred to as needed to insure the design is optimized.

Another area of concern to the product specifications is regulated standards. Increasingly government agencies at both the state and federal levels are becoming involved in the legislation of product standards of performance and energy consumption. No product designs taking place in this dynamic standards environment can ignore what will be occuring in the not too-distant future. Therefore, a review of these standards must be conducted to insure that the product characteristics meet these standards.

TABLE 11. IMPORTANCE OF COMMERCIAL GAS-FIRED WATER HEATER CHARACTERISTICS

PRODUCT CHARACTERISTICS	NEW CONSTRUCTION			REPLACEMENT		
	Most Important	Neutral	Least Important	Most Important	Neutral	Least Important
Initial Cost	x			x		
Payback Period			x	x		
Life-Cycle		x				
Reliability		x		x		
Safety	x			x		
Maintenance		x		x		
Product Size		x			x	
Noise and Vibration		x		x		
Ease of Installation	x				x	
Energy Efficiency		x			x	

Finally, with the trade-off of product characteristics completed and the product standards defined, a selection from AAMC product line will be targeted for replacement by the product to be developed by this program. The specifications can be used to establish energy conservation and the projected market for this specific product.

3.2 Trade-off Analysis of Product Characteristics

3.2.1 Definition of Product Characteristics. As explained in section 3.1 the group of product characteristics interact with each other to make either a positive, negative, or neutral input into the decision of a consumer to buy any specific product. The starting point for a trade-off analysis is to rank the product characteristics in terms of their importance to consumers. The ten general product characteristics can be more fully understood if they are broken down into sub-characteristics or more clearly defined as the case may be.

1. Initial Cost - The initial cost of the product includes: the purchase price, installation, and applicable taxes. This charateristic can be influenced by tax credits, low interest loan programs, and differences in installation requirements.

2. Payback Period - If the initial product cost is higher, then consumer must be shown how the product will return the additional cost in energy savings, extended service life, etc. otherwise there is resistance to the additonal cost. There is also a psychological barrier to excessively long paybacks by most consumers unless some greater social implication can be established as criteria in the payback evaluation.

3. Life-Cycle Costs - The combination of initial installed cost, operating costs, taxes, and maintenance cost and a discount rate determining life-cycle cost. These costs can be compared between different products or configurations.

4. Reliability - This product characteristic determines the perception that the consumer has regarding the quality of the product. Since the product is perceived in a service environment, the criteria for reliability is the consumer's perception of expected service. In water heating, this service expectancy is very high since competitive products have virtually no premature failure rate.

5. Safety - Safety in the appliance industry is very stringently regulated by standards and certification procedures. Obviously, the consumer would be concerned if he suspected a safety problem but as a decision characteristic it is usually assumed to be acceptable if the product has been properly certified.

6. Maintenance - The maintenance and reliability questions are addressed almost in the same vein. If a product is reliable it should require low maintenance. However, there exists a trade-off between the cost associated with maintenance plus the inherent inconvenience of maintenance requirements and the cost of building in reliability which normally adds to initial cost.

7. Product Size - The product size characteristic has three (3) components when applied to water heating. First, the physical size of the unit. Second, the capacity of the unit. Third, the ability of the unit to meet user hot-water demand requirements. This delivery rate is subject to standardization and is often termed as draw down.

8. Noise and Vibration - This characteristic, although only one of the operational characteristics of the product, is recognized as important because of the negative record of pulse-combustion-type equipment in this particular characteristic. Another operational characteristic that might be considered, is vibration (commonly associated with sound)

which is also not normally associated with water heating equipment. In conventional water heaters these characteristics are normally accepted and change very little from one product to the next. However, in this regard pulse combustion could have a negative characteristic since it differs from the subjective norm expected by the consumer.

9. Installation - In order for the product developed under this program to be successful, this characteristic must be given careful consideration. Its importance is cost-related for both the new construction and replacement market. If the unit is compatible with current equipment locations in terms of size, connections, etc., it will not impact sales potential. If it is not, it will become a strong detriment in the trade-off analysis.

10. Energy Efficiency - This ingredient to product characteristics is interjected by the current trend towards standards, and the basic objectives of the program. Pulse combustion has been chosen as a basic design criteria in order to meet these objectives, due to the inherent efficiency in this type of combustion. How energy efficient the product can be made must be traded off with other basic characteristics in order to maintain a marketable balance.

3.2.2 Ranking of Product Characteristics for the Marketable Balance. By far, the first in importance to the successful marketing of the new product are the three major cost inputs to the buy decision. 1) Initial cost, 2) Life-cycle costs, and 3) Payback period. These however, are determined by other product characteristics which form a product characteristic matrix. These characteristics will play no part in a purchase decision should the resultant costs be non-competitive. Price will be the sole criteria. This ranking does not attempt to rank social motivation, i.e., desire to save energy for the national good, which probably has some discrete marginal value which could be added to the total price without affecting the marketability. Since this is an emerging psychological factor for consumers, it is too unreliable to quantify, and probably too fragile to survive in the face of economic adversity. Second, it is not seen as a viable factor for the new construction market unless standards direct that the marginal cost value be spent.

The remaining seven characteristics have equal weighting and ranking in the analysis. The one comment that should be made about these characteristics is that no single characteristic can be allowed to become negative. The minimum acceptable level for any characteristic is a consumer rating of neutral.

3.2.3 Selection of Potential Products with Currently Defined Characteristics as a Candidate for Replacement by the New Product. To some extent, the results of this analysis are driven by the competitive products in the industry, which exhibit a group of characteristics which are well defined. Also, recognizing that the results of Section 2 have defined three product ranges, where the highest degree of market penetration can be obtained, utilizing the current

lines of distribution in existence at AAMC. The analysis of product characteristics is thus narrowed to five current products being marketed by AAMC. In order for the pulse-combustion gas-fired water heater (PCGFWH) to meet the characteristic requirement needed for marketability, the product must approximate the characteristics exhibited by the current products, i.e., Model MA 200-100, Model MA 199-85, Model MA 199-100, Model MA 250-100, and ASME 250-100. Products in the 75-99,000 Btuh have been excluded because they offer less energy savings potential than the products of higher input rates, and the number sold of any one model are comparable to other models with higher input rates.

3.2.4 Constraints on Trade-offs. Any of the five models defined in Section 3.2.3 is a candidate for conversion to pulse combustion. However, AAMC indicates that due to code requirements, the products with input rates greater than 199,900 Btuh, have an additional requirement that the water storage tank must be ASME certified. Therefore, because of the additional cost added by this requirement, they sell greater numbers of the MA 200-100. MA 199-85, and MA 199-100 than the MA 250-100 or ASME 250-100. AAMC also indicated that a user might buy multiples of a smaller model in order to deliver the water requirement rather than the bigger unit, since it would be cheaper. This eliminated the 250-100 series from the final analysis due to the limited market appeal. The market study also indicated the second largest of the three market segments was the 100 to 199,000 Btuh segment (from Section 2).

The methodology employed in final selections of design parameter is to rank in order of importance the factors which must be considered when setting final specifications. These factors in order of importance are:

a. Compliance with state and federal standards - If the product is to reach the marketplace, it must be able to pass stringent certification procedures. For the purposes of this study, these standards can be defined as: ANSI Standards, California Energy Commission Water Heater Standards, and ASHRAE Standards 90-75 for energy-consuming appliances. In addition, the resultant product must be certified as safe for usage by consumers by either the American Gas Association or Underwriter's Laboratories.

b. Marketability - The final product must meet the test of the market place by being competitive in total life-cycle cost, while being able to compete with other competitor's products for specific usages, and customers through the proper control of product characteristics.

c. Energy Efficiency - The final product design must exhibit a higher energy efficiency than is currently available in any competitive product in order to meet the program objective, and justify the overall program.

On a continuum, this ranking of priorities in design criteria is established for self-evident reasons. If the product does not comply with standards, it will never reach the market. Further energy efficiency will be of no use unless the resultant product is acceptable to consumers when compared with other products. Thus, the sequence for trade-off is established:

a. If an exclusive (defined in terms of mutually exclusive parameters), exists between an energy efficiency design parameter and a marketability consideration, the marketability must be given preference.

b. If an exclusive decision exists between a marketability parameter and a standard's compliance parameter, the standard's compliance parameter must be given preference.

It is anticipated that very few decisions in the design will ever fall in the mutually exclusive realm. However, if they do, the decision making process is outlined.

The criteria for non-exclusive parameters must also be developed in a similar manner. This criteria must be acceptable or as we have previously defined it, the neutrality of the specific parameter must be maintained.

3.2.5 Analysis of Product Characteristics Under Defined Constraints.

a. Gas Input Rate - The three products being utilized for comparison are all in the 199,000 plus Btuh category. This selection is based on several criteria. First, they are in the largest single segment of the CGFWH market. Second, the input rate is the highest rate possible under code directed standards without adding additional costs to the product. Third, the products involved are currently being marketed in AAMC's CGFWH product line. And finally, the higher input rate provides the best opportunity for energy conservation in terms of units installed. In addition, this product may prove to be an adequate substitute for higher input rated equipment because of its higher efficiency, a side benefit for increased efficiency.

b. Product Size and Physical Dimensions - These characteristics are defined by a number of parameters. The product size is directly related to usage. Certain requirements demand storage reserves only, while other commercial requirements require instantaneous hot water. The pulse-combustion technology is applicable to both usages. The input rate is the same for both units, as is the basic configuration, with the only difference being in the storage capacity. Both usages may be accommodated by one design.

CGFWH of the 199,000 Btuh input category have physical dimensions which show a variance between height and diameter. The one constraint is that the unit must fit through a conventional doorway. For the purposes of this study however, the diameter selected should represent

a diameter currently being produced at AAMC, in order to use existing manufacturing tooling (24", 26", or 28"). The height of the unit can be a variable to make allowances for the storage capacity desired, as long as it passes the doorway test. Since instantaneous water heaters are defined by the California Energy Commission to impart 4,000 Btuh per gallon, the height variance will allow for the water volume changes required.

The capacity of the design should be between 80 to 100 gallons for the storage type. To insure the instantaneous unit, this would make the instantaneous less than a 50-gallon unit at the 199,000 Btuh input.

c. Seasonal Efficiency - The seasonal efficiency is one measurement of the efficiency of a water heater. The efficiency measurements commonly mentioned for water heaters are thermal and/or recovery efficiency, and standby loss. In conventional water heating there is considerable heat loss through the multiple flue systems which are used to transmit the heat to the water. Certain new product developments are restricting the heat loss, but the thermal venting, required for safety, limits potential gains made possible through restriction methods. The seasonal efficiency is the percent of the energy input that actually ends up in the hot water.

Since pulse combustion does not require natural-draft venting, the loss of heat is minimized. In addition, pulse-combustion burners can operate in the condensing mode which allows thermal efficiencies in excess of 90%. Conventional burners do not operate in this regime because the lower flue temperatures interfere with thermal venting requirements.

There are standards being developed for seasonal efficiency, and the indication is that the ANSI 10.3-1974 (industry) standard of 70% will gradually be moved updwards. The California Energy Commission is now requiring 75%. In order for the pulse-combustion process to be used as a viable marketing tool, the service efficiency should be targeted well above these standards, and well above current equipment for even the new high-efficiency systems, such as power burners. The advantage of pulse combustion is that for a given steady-state efficiency, the seasonal efficiency will be very much the same after all losses are accounted for. In current units utilizing flues, the seasonal efficiency drops severely from the steady state value, due to heat losses through the flue during standby.

In reviewing the state-of-the-art equipment with AAMC we have come to the conclusion that current equipment will soon push near condensing (85% steady state efficiency) thermal/recovery efficiency. If the pulse-combustion units matches this, its seasonal efficiency would still be much better, due to the reduced exhaust gas temperatures.

Consideration can be given to going even further by operating the unit in the condensing mode. However, there are cost trade-offs which must be considered in this decision. They are primarily, the additional installation cost associated with a sewer connection and the certification required to drain the condensate in the sewer system, and/or installing an evaporation sump.

d. Standby Loss - The standby loss of any water heater to be sold in California must meet the standard as set down by the California Energy Commission. The formula for determining this loss limit is

$$S = 2.3 + \frac{67}{CAP}$$ [a]

where S = standby loss and CAP = storage capacity in gallons.

For a 100-gallon water heater, it would be 2.97% loss of stored heat energy per hour.

e. Draw Down - The amount and temperature of hot water delivered, is referred to as draw down. (See 2.5 page 4, Technical Development.) ANSI standard Z21.10.3-1975.

f. Safety, Reliability, and Maintenance - The unit developed shall have a service life of at least five years as does conventional equipment. Ignition, controls and installation shall be made as simple as possible, and shall use as a guide current equipment. Especially important is the retention of the low maintenance-high reliability image of water heaters in general, as a product characteristic of this unit.

g. Sound Level - There currently is no standard for the allowable sound level other than OSHA standards for industry at 90 dBA for eight hours, and the EPA standard of 85 dBA for noise pollution. Therefore, the standard for this characteristic must be current equipment. As a guide, the unit should be as close to current equipment as possible with the attainability being governed by the constraints listed in the last section, and the cost for sound attenuation.

3.2.6 Trade-off Analysis; Cost to Product Characteristics. The presentation of cost trade-offs must be, at this early stage in the development program, very subjective. In order to provide some analytic base, the following structure is utilized:

---

[a] This formula is being reviewed by the California Energy Commission in order to arrive at a more stringent standard.

1. Each product characteristic is shown and its expected impact on life-cycle cost of the product is listed as either increase, decrease, or neutral

2. The objective then becomes in the design and prototyping to minimize the increases, maximize the decreases, and at least maintain the neutrals. These subjective perceptions are presented in Table 12. Increased costs are those above the current equipment costs. Decreased costs are those less than current equipment costs. Neutral costs are those which are unchanged.

TABLE 12. COST IMPACT OF PRODUCT CHARACTERISTICS UTILIZING PULSE COMBUSTION AS OPPOSED TO CONVENTIONAL EQUIPMENT

Characteristics	Assumptions	Expected Cost Impact
Input Rate	199,000 Btuh	Neutral
Tank Capacity	100 gallon storage	Neutral
	50 gallons instantaneous	Neutral
Unit Size	24", 26", or 28" dia., less than 78" height	Neutral
	Different dia. or more than 78" height	Increase
Service Efficiencies	75% to 85%	Decrease
	Above 85%	Increase
Standby Losses	Less than 2.97%	Neutral
Draw Down	Greater than 60% standard	Neutral
Venting	New construction market	Decrease
	Replacement market	Neutral
Sound Level	Lowering to current equipment levels	Increase
Product Components	More complex than current	Increase
Safety, Reliability, and Maintenance	Equivalent to current products	Neutral
Installation	Non-condensing mode	Neutral
	Condensing mode	Increase

3.3 Payback Analysis of Energy Savings and Its Effect on Marketability of the Pulse-Combustion Water Heater

The subjective factor of payback means a different definition to each different group of products. For the purposes of most energy-consuming products, the analysis of the payback is the expected length of time to recover any excess purchase cost through energy savings. The purchase price is generally accepted to include the price, plus installation, plus any tax applicable to the purchase or installation, plus any cost associated with financing the purchase. The ideal situation would be for the product to cost the same or less than current products. However, experience has shown that when you add the parameter of energy conservation to a product, it has an associated cost over and above the cost of comparable equipment, which does not include that parameter.

The question of importance to the marketing of the PCGFWH is: how long a payback is acceptable to consumers? This is a question of sensitivity of the customer to immediate cash flow, as opposed to monthly cash flows. The general consensus is that the small business community, apartment house owners, and individuals who form the majority of the market, are highly sensitive to immediate large cash flows. If consideration is given to our assumption of a five-year life (replacement in the sixth year), for a commercial water heater, an arbitrary scale of sensitivity can be subjectively derived based on discussions with the market participant. In Figure 2 below, we see a generalization of this sensitivity in several potential sectors of the market. The sensitivity to payback could be termed "resistance to buying." The units are a percentage of all potential buyers.

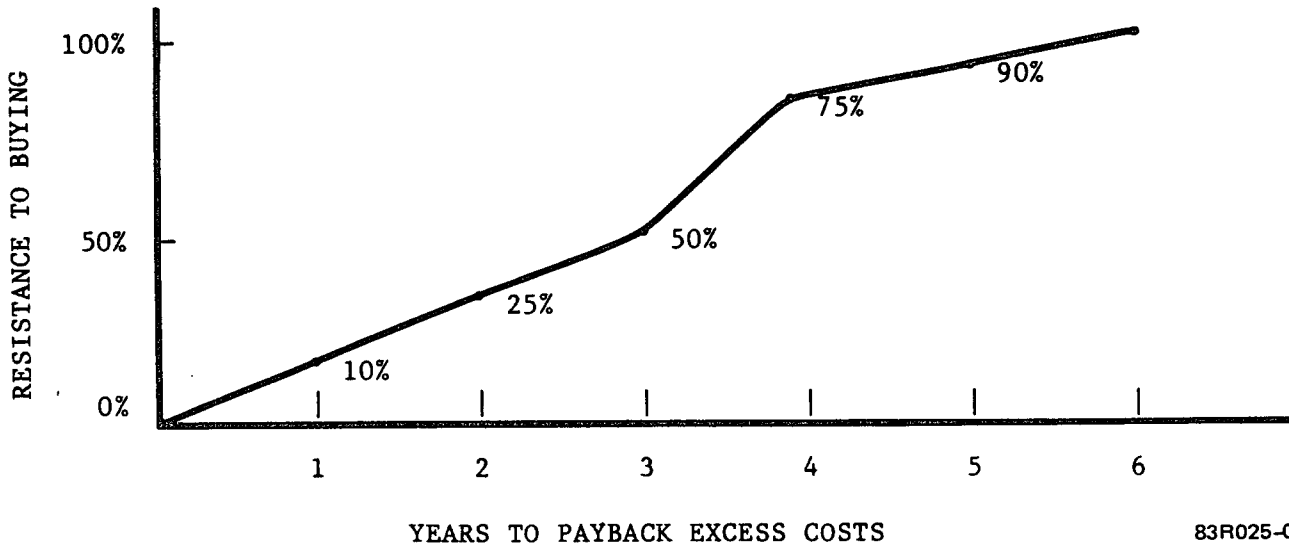

Figure 2. Sensitivity to Payback Curve

The contacts with potential buyers, gas companies, and AAMC indicate that a sensitivity curve might look something like the one shown. The percentage indicates the percent of the market, which would not be interested for cash flow reasons in the energy efficiency savings for various payback periods. Subjectively, based on inquiry, 25% of the market would not be interested in the product with a two-year payback.

Financially, no company can afford to sacrifice any more than 25% of the market initially. To introduce the product and maintain a sales level which is acceptable, the unit must meet this payback parameter or it will be cost prohibitive to introduce it in place of an existing product that is currently holding a market share. It should be pointed out that this curve can be changed dramatically by the introduction of more rigid standards, low cost loans, or tax incentives, and rapidly spirally energy costs, which change the buyer's perceptions and force a reevaluation of payback.

In reality, the subjective interpretation of payback should be considered to be dynamic and changeable with each change in the influence parameters outlined. However, for the context of this program, our goal should be reflective of the worst case where nothing else effects the buyers payback psychology. Therefore, we interpret two years or less to be the best goal to meet program objectives.

3.4 The Relationship Between Payback and Manufacturing Cost

A critical aspect in the success or failure of a new energy-efficient product is payback, or the change in competitive life-cycle cost (which is really the figure of importance). The cost of most importance in the total first cost to the consumer, is the cost to manufacture. This has been proven with many different types of products, but is especially true for the appliance industry, as it attempts to improve energy efficiency. It is because of this change in the cost to manufacture, that there has been a natural reluctance to be "first" into production with a more energy-efficient or more expensive product line.

If an energy-efficient product modification will initially add to the cost of the product, it will impact sales in a very cost-competitive industry. The cost of product development is also added expense, which in normal circumstances, must be spread over a considerable period of time to avoid escalation of current manufacturing cost. This perception of cost escalation delays the new product development cycle in the appliance industry.

The key factor which is being contributed by the current program is to accelerate this second condition while enhancing the prospects for someone to take the initiative and be first into the marketplace on a large scale. The expected results are that the competitive pressure of the marketplace will then take over and dictate that other market shareholders will follow with similar products. It should be pointed out that due to the capital intensive nature

of appliance production and the large size of the marketplace, that there are no threats to the free enterprise system from this program, because no single manufacturer could satisfy the demand of the entire market.

The boundaries of allowable manufacturing costs for this product are a very real consideration in the final product characteristics and specifications. However, prior to the final design, the manufacturing cost cannot be established. Therefore, the design criteria must be guided by certain manufacturing cost-control principles:

a. Reproducibility: The specification for the product components cannot be made too restrictive in cost, due to an excessive labor input. This is the tradeoff between hand producing each component and being able to machine produce an item. Some production engineers refer to this as the "simplicity quotient" or the simpler the part, the easier it is to produce. In order to satisfy this requirement, a significant amount of interaction is required between the R & D team and the production people.

b. Make versus Buy: In order for most manufactured products to stay competitive with similar products, the balance between the parts which are made internally, and the parts which are purchased must be maintained at a similar level to existing products. Control over manufacturing quality and cost is threatened, if a new product requires changing this balance. Therefore, the new product should match as closely as possible manufacturing quality or manufacturing capability should be altered to accommodate the new product. In reality, a combination of the two is normally required.

c. Value Added Considerations: The labor input normally forms the highest basic component of manufacturing costs when fully burdened (as contrasted to material costs). The decision in manufacturing cost control and in product design is to minimize value added. If a particular component requires excessive labor input, a substitute should be sought. The experience of the manufacturing organization will define what is "excess value added" for any given production environment.

In conjunction with this effort, an analysis of life-cycle cost (LCC), as they relate to manufacturing costs, has been performed in an attempt to estimate the upper boundaries of acceptable manufacturing costs in different environments, under different constraints. The model used for LCC determination was developed in a report prepared for the Gas Research Institute.[5]

The original equation for LCC was presented as follows:

$LCC = C_p + C_o + C_m - S$ where,

C_p = Consumer's initial cost (including installation),

C_o = Cost of Operation,

C_m = Cost of Maintenance,

S = Salvage Value.

The change in life-cycle costs in these products can be expressed as changes in initial cost, cost of operation, cost of maintenance, or a change in salvage value.

Shock Hydrodynamics modified this equation to utilize the manufacturing cost as a variable in place of C_p as defined above, through the use of a contribution margin of 40% or that is to say, that the manufacturing cost contribution (MCC) is 40% of the consumer cost. Therefore, the equation term C_p is defined as:

$$C_p = 2.5\ (MCC)$$

This is the most accurate estimate of consumer price at this early time, in the product development.

From the basic LCC equation, SAI developed a change in LCC (ΔLCC) model which can be used to investigate changes in LCC and ultimately used to determine payback which we have defined previously as having to be two years or less in order to insure market share. Our final (ΔLCC) equation is developed with the following assumptions:

1. The change in operational costs, C_o, is due to reduced consumption of natural gas.

2. That the escalation rate, e, of natural gas costs is constant.

3. That the annual discount rate, i, is constant and approximates the average inflation rate calculated for ten years.

4. That the change in C_o (ΔC_o) is approximated by the model:

$$\Delta C_o = \sum_{n=1}^{N} E_I\ C \quad \frac{(1+e)^n}{(1+i)^n}$$

where N is the life expectancy of the appliance, E_I is the savings in annual gas consumption of an individual appliance, and C is the present cost of natural gas.

5. $\triangle C_p$ is defined as 2.5 MCC - 2.5 Current Manufacturing Cost Contribution (CMCC).

6. Indexed $\triangle C_p$ is $\triangle C_{pi}$, a product cost indexed for inflation at some future product introduction date utilizing the discount rate previously defined or $\triangle C_{pi} = \triangle C_p\ (1 + i)^J$ where J is the number of years to product introduction.

7. Payback, N_p, is the change in cost of purchase divided by the energy savings multiplied by the indexed price of natural gas or $N_p = \triangle C_{pi}/E_I C_e$, where C_e is the escalated cost of natural gas.

Thus $\triangle$LCC is derived as

$$\triangle LCC = \triangle C_p\ (1+i)^J + \sum_{n=1}^{N} E_I\ C\ \frac{(1+e)^n}{(1+i)^n} + C_m - \triangle S$$

and, assuming no difference in maintenance cost or salvage value, N_p is derived as

$$N_p = \frac{N \triangle C_p\ (1+i)^J}{\sum_{n=1}^{N} E_I\ C\ \frac{(1+e)^n}{(1+i)^n}}$$

These two equations were programmed on the computer and data runs were established to test the sensitivity to each major variable. The terms were run over a range of input values to get a feeling for the impact of various cost changes on the results. The definitions of the terms in the equation were based on certain key assumptions.

1. The E_I or energy savings term requires that a definition of current energy consumption be established for the product. This required a working definition of the operating-on cycle for the commercial water heater in its operating environment. This is a very big unknown for the commercial sector. Interviews with various individuals, associated with end use, indicates that the on-cycle is entirely dependent on end usage. A twenty-four-hour restaurant's water heater might operate

twenty hours in order to supply the needed water. A laundry would operate in excess of twelve hours. An apartment building would operate from eight to twelve hours, depending on occupancy, number of persons, number of units, etc. All of these times are only subjective however, and are not backed up with any kind of real data. Therefore, product data will need to accommodate the user's application by providing a range of operating-on cycles so the consumers can pinpoint their own payback. For our purposes, the three selected operating times were: eight hours, twelve hours, and sixteen hours. These data points will provide the necessary information to do a least-square fit curve for payback if that is desired at a future date for the new product after costs are more closely established.

In addition, the data used to compute E_I assumes a certain seasonal efficiency gain over existing products. This means that the current seasonal efficiency for existing products is assumed to be improved upon as a percentage gain in energy consumption.

The three targeted products for potential replacement are identified as the MA 199-85, 199-100, and the MA 200-100. These three products are analyzed to form a basis for the seasonal efficiency inputs which are to be improved.

Finally, the gains in seasonal efficiency in PCGFWH are utilized to project the energy savings. Two cases are employed; the non-condensing mode, and the condensing mode. The data is summarized in Table 13 and the values of E_I are determined for usage in the model.

The value of E_I is determined by the following equation:[4]

$$E_I = I_R O_C \left[1 - \frac{CSE}{N_{S_E}} \right]$$

where: CSE is the seasonal efficiency with the current technology.

N_{S_E} is the seasonal efficiency with the new technology in the non-condensing or condensing mode.

O_C is the operating on-cycle in hours per year.

I_R is the input rate of the appliance in Btuh.

The final value of E_I provides a range of values since two values of N_{S_E} are utilized, one for condensing (93%) and one for non-condensing (87%), based on flue temperatures of 120°F and 220°F respectively. These percentages are determined from a humidity of 50%, barometric pressure of 30" Hg, a room temperature of 70°F, and a CO_2 content in the exhaust gases of 10%.

TABLE 13. E_I VALUE DETERMINATION

Model Number	I_R Input Rate (Btu/h)	CSE Seasonal Eff. (%)	N_{S_E} Replacement Seasonal Eff. (%)	O_C Operating On-Cycle (Hours/Year)	E_I (Million Btu/Year)
MA 199-85	199,000	69	87[a]	2920	120.223
			93[b]	2920	149.956
			87	4380	180.335
			93	4380	224.934
			87	5840	240.447
			93	5840	299.912
MA 199-100	199,000	67.9	87	2920	127.570
			93	2920	156.829
			87	4380	191.356
			93	4380	235.244
			87	5840	255.141
			93	5840	313.658
MA 200-100	199,000	67.9	87	2920	127.570
			93	2920	156.829
			87	4380	191.356
			93	4380	235.244
			87	5840	255.141
			93	5840	313.658

[a] Non-condensing
[b] Condensing

From the calculations of E_I, it becomes apparent that the most energy savings are possible with a replacement of MA 199-100 in all operating regimes. The MA 199-100 also has the largest market penetration potential, since it sells at a rate approximately ten times that of the other two products. Therefore, for the payback program, the MA 199-100 becomes the targeted product.

2. The cost of natural gas (C), is assumed to be 40 cents a therm. The current price is below this, but the introduction of the product is still two years away and most current energy cost literature indicates that this figure will be close to the actual price, since it is the

current price of Canadian natural gas. The current supply contracts for many major utilities will expire soon, and need renegotiation. This further complicates the price forecasts.

The decontrol of natural gas will have a cost escalation impact, which is difficult to estimate. Southern California Gas Co. is currently using 50 cents a therm for their projections.

3. The escalation factor for natural gas is estimated at 14% per year by the Southern California Gas Co., the largest gas utility in the world.

4. The discount rate is estimated as the ten-year average inflation factor in the commercial sector, 12.30%.

5. The replacement cycle, N, is assumed to be five years in accordance with our development in Section 2.

6. The product introduction date is assumed to be two years in accordance with the program schedule.

7. The cost of maintenance and the salvage value are assumed to be unchanged for the new product when compared with the existing product. This makes the value of these factors zero in the basic equations, and in the program runs.

8. The change in cost is determined from the estimated cost to manufacture the pulse combustion water heater, and the current manufacturing cost of a MA 199-100, or any other product which is the subject of analysis. This equation assumes a 40% contribution to cost made by manufacturing the product. All other costs in the other 60% are assumed to be constant.

The final estimated manufacturing costs are presented in Table 14 for the six assumed E_I computed previously in Table 13. This table forms a basis for putting a cost ceiling on manufacturing costs. Also, if necessary, the computer program can be re-run at a later date to evaluate paybacks for various manufacturing cost additions, or other valuable changes. The table presents the maximum allowable manufacturing cost increases which will permit a two-year payback.

Since the current manufacturing cost is $339 for a MA 199-100, this gives some feeling for the latitude permitted in this critical parameter, and allows a ceiling to be set on manufacturing cost. From the analysis, it is apparent that manufacturing costs of three times the current costs of $339 for the MA 199-100 would be permissable and still meet the two-year payback constraint we have imposed in earlier sections.

TABLE 14. ALLOWABLE MANUFACTURING COSTS INCREASE TO PERMIT A TWO YEAR PAYBACK

Operating-On Cycle (Hr/Yr)	Seasonal Eff. (%)	E_I (Therms)	Cost of Natural Gas/Therm (Cents)	Max. Mfg. Cost Increase[a] (Dollars)
2920	87	1275.7	40	739
2920	87	1275.7	50	839
2920	93	1568.3	40	839
2920	93	1568.3	50	939
4380	87	1913.6	40	939
4380	87	1913.6	50	1039
4380	93	2352.4	40	1039
4380	93	2352.4	50	1139
5840	87	2551.4	40	1039
5840	87	2551.4	50	1239
5840	93	3136.6	40	1239
5840	93	3136.6	50	1439

[a] The current manufacturing cost is $339, so the total manufacturing cost for each can be computed by adding $339 to the cost increase.

3.5 Product Characteristics and Constraints

If a product characteristic and constraint guideline were to be drafted, a good model would be the current product being produced by AAMC. Therefore, we can produce a table of values and constraints which can be used to evaluate the new product's market potential. Throughout this section we have developed a number of characteristics and constraints for the product. In addition, the selection of a specific product as a target for replacement allows us to develop certain key product characteristics and dimensions for the design. In Table 15 these different parameters are presented as summary to this section.

TABLE 15. SPECIFICATIONS FOR THE PULSE-COMBUSTION GAS-FIRED WATER HEATER

Parameter	Value Assigned	Source
Gas Input Rate	199,000 Btuh	MA 199-100 Spec.
Hot Water Temperature	180°F	Market Standard
Thermal Efficiency (Instantaneous)	85%	Payback Analysis
Recover Efficiency (Storage Type)	85%	Payback Analysis
Standby Loss	2.97%/hr	Calif. Energy Comm.
Draw-down	60%	ANSI Standard
Ignition Device	Intermittent Ignition Device	Calif. Energy Comm.
*Sound Level	75 dBA	MA 199-100 Measurement
Recovery GPH @ 100°F	168	MA 199-100 Spec.
Exterior Dimensions	Height = 73 3/4" Diameter = 28 1/4" Tank Height = 68"	MA 199-100 Spec.
Top-Nipple Size	1 1/2"	MA 199-100 Spec.
Back-Nipple Size	2"	MA 199-100 Spec.
Height to Top Nipple	72"	MA 199-100 Spec.
Top-Nipple Space	20"	MA 199-100 Spec.
Height to Back Hot	57"	MA 199-100 Spec.
Height to Back Cold	20 1/2"	MA 199-100 Spec.
Gas Connection Height	5 1/2"	MA 199-100 Spec.
Gas Connection Size	1/2"	MA 199-100 Spec.
Venting - Air Inlet	2" Pipe 50 Ft. Est.	AGA
- Exhaust Gas	2" Pipe 50 Ft. Est.	AGA
Maximum Manufacturing Cost	$1000	Payback Analysis
Payback Period	2 Years	Payback Analysis

*The guide for sound level is existing equipment, in this case the MA 199-100.

4. ANALYSIS OF POTENTIAL MARKET SHARE

4.1 Relationship of Total Market to Market Share

The market identification for the CGFWH market was completed in the second section of this report. The objective of that section was to define the market parameters and the key segments which could be used to establish the market share held by AAMC products. Included in that objective was some reasonable projection of total market size through the time-frame of interest, in this case, the year 2000. This information, along with the product selection delineated in section 3, provide the basis for approaching the "how many" question which remains to be answered.

The objective in this section is to establish the relationship between the total market, the product specified, and the market share-capture possibilities for the product. From the review of these factors, a market-capture projection can be derived which will enable a "number of units possible" answer to be generated for the product. This information is also necessary to complete an energy-saving estimate.

We have shown the AAMC market share in four segments of the GAMA defined market for commercial gas-fired water heaters, Table 10. The estimates on market shares are based on expanding the GAMA market segments to include the AAMC data on shipments, and then established a total shipment percentage for AAMC equipment as it relates to the total market estimated and expanded by GAMA for the five years in the replacement cycle.

In a similar manner, the segment percentage for any particular product can be established. The first step is to expand the sample data for the segment of interest to make it reflective of its proportional share of the total market. For our purposes, we assumed an equal weighting in this proportional relationship. That is to say, the relationship of any segment to total sample size (GAMA segment data totals + AAMC shipments in the segment) will approximate the relationship between the actual segment size and the total market.

Through this methodology, namely, expanding the GAMA Data to include AAMC shipments, the data on "Percentage of 1979's Market Shipped" is presented in Table 16.

TABLE 16. AAMC PERCENTAGE OF MARKET SHIPPED - 1979

75-99	100-199	200-299	300-500	% of Market Shipped
4.12%	2.44%	1.77%	.31%	8.64%

These percentages are related to the total market shipments in 1979. The data are developed by the following relationships:

$$\frac{\text{AAMC SHIPMENT FOR EACH SEGMENT (1979)}}{\text{TOTAL GAMA EXPANDED SHIPMENTS (1979)}} =$$

AAMC PERCENTAGE OF MARKET SHIPPED FOR 1979

It is also possible to develop data for the percentage of a specific market segment shipped for the same time frame. Table 17 shows the "Percentage of Market Segment Shipped" data.

TABLE 17. AAMC PERCENTAGE OF MARKET SEGMENT SHIPPED - 1979

75-99	100-199	200-299	300-500
26.58%	11.18%	14.29%	4.42%

The data present the following relationship:

$$\frac{\text{AAMC SHIPMENTS BY SEGMENT (1979)}}{\text{EXPANDED GAMA DATA BY SEGMENT (1979)}} =$$

THE AAMC PERCENTAGE OF MARKET SEGMENT SHIPPED (1979)

This appears to be the better indicator of the AAMC market position since the data shows consistency for the five-year period and establishes the relationship between AAMC and its competitors in any given segment while excluding segments where AAMC does not currently market products.

4.2 Unit Shipment Estimates for the MA 199-100

Using 1979 as a base year, a relationship can be established between MA 199-100, and the GAMA segment to which it belongs. Second, an estimate can be derived for the periods of interest (in this case, through the year 2000), utilizing the market projection through 2000, found in Table 8 and the proportional share principals developed in Section 4.1.

Assuming that the base year for projection is 1979, when 3293 MA 199-100 units were shipped, a relationship between the GAMA data and this unit shipment data can be established as follows:

$$\frac{\text{1979 MA 199-200 Shipments}}{\text{1979 Expanded GAMA 100-199 Data}} = \qquad (1)$$

$\frac{3,293}{81,205}$ = 4.1% of the Segment is made up of the MA 199-100.

Further, assuming that the relationship of the segment to the total market can be expressed as follows:

$$\frac{\text{1979 Market Segment Data (Expanded)}}{\text{1979 Total Market Shipments (GAMA Expanded)}} = \qquad (2)$$

$\frac{81,205}{254,214}$ = 31.9% of the total market.

Utilizing the Total Market Projection to the Year 2000, annotated in Section 2.5, Table 8, the potential market capture projection (unit shipment estimates) by year through the year 2000, can be developed as follows:

> Total expected year sales from Table 8 x the expanded segment percentage (31.9%) for 1979 x market share percentage (4.1%) for 1979 = Total Market captured for the year.

Of necessity, this assumes that the 1979 figures established in (1) and (2) also apply to the future.

Given these assumptions, the projection for unit shipments of the MA 199-100 through the year 2000 are presented in Table 18.

TABLE 18. MARKET PROJECTION TO THE YEAR 2000 FOR THE MA 199-100

Year	Total Sales	Total 100-199 Market Segment	Total Market for the MA 199-100
1979	254,314	81,205	No Product
1980	198,963	63,469	No Product
1981	200,259	63,882	No Product
1982	241,538	77,051	3159*
1983	291,030	92,839	3806
1984	320,736	102,315	4195
1985	269,104	85,844	3520
1986	274,328	87,511	3588
1987	319,755	102,002	4182
1988	373,627	119,187	4887

TABLE 18. MARKET PROJECTION TO THE YEAR 2000 FOR THE MA 199-100

Year	Total Sales	Total 100-199 Market Segment	Total Market for the MA 199-100
1989	407,959	130,139	5336
1990	361,211	115,226	4724
1991	371,593	118,538	4860
1992	427,467	136,362	5590
1993	482,091	153,787	6305
1994	522,497	166,677	6834
1995	482,163	153,810	6306
1996	499,319	159,283	6530
1997	562,345	179,388	7355
1998	624,522	199,223	8168
1999	672,905	214,657	8801
2000	640,993	204,477	8384

* Product Introduced

5. ANALYSIS OF IMPLICATIONS TO ENERGY CONSERVATION

5.1 The Relationship Between Units Installed and Energy Conservation

If a determination is to be made about the energy conservation potential of a new appliance concept, the logical starting point is to establish the expected number of units that will be installed in any given year. In Section 4.2, we developed a "Market Projection to the Year 2000 for the MA 199-100", a current product in the AAMC product line. This projection provided the data necessary to make an estimate of installed units for each year up to the year 2000, thereby, giving a basis for doing energy conservation projections for each of the years through the term of the projection.

Certain assumptions were required to make the projection. First we assumed that the unit shipments for the new pulse-combustion water heater will approximate the unit shipments for the MA 199-100. Second, we assumed that a five-year replacement cycle is an accurate reflection of the real world product replacement cycle. (Replacement occurs at the beginning of the sixth year.) Third, we assumed that the product development schedule will allow this product to reach the market January 1, 1982. And finally, the assumption made about the market is indicative of what will take place in the future, and that our segmentation of the market is correct.

With these assumptions in mind, the installed unit from 1982 to 2000 is presented in Table 19. Table 19 utilizes a summing and replacement methodology which begins with creating a five-year nucleus, adding the sixth year to it, and subtracting the first year from it, forming the installed unit count for the

added year. As an example, for the year 1987, the in-place count would be the sum of the units shipped in 1982 + 1983 + 1984 + 1985 + 1986 + 1987, less 1982 (the year being replaced by 1987). With these calculations, we can proceed to project the energy conservation potential for the new appliance through this same time frame.

TABLE 19. INSTALLED UNITS FROM 1982 TO 2000 [a]

Year	Units Shipped	Year Replaced	In-Place Units
1982	3159	-0-	3159
1983	3806	-0-	6965
1984	4195	-0-	11160
1985	3520	-0-	14680
1986	3588	-0-	18268
1987	4182	1982	19291
1988	4887	1983	20372
1989	5336	1984	21513
1990	4724	1985	22717
1991	4860	1986	23989
1992	5590	1987	25397
1993	6305	1988	26815
1994	6834	1989	28313
1995	6306	1990	29895
1996	6530	1991	31565
1997	7355	1992	33330
1998	8168	1993	35193
1999	8801	1994	37160
2000	8384	1995	39238

[a] Improved 100-199 Btu/h units replacing the MA 200-199 unit.

5.2 Analysis of Implications to Energy Conservation

In Section 3.4, Table 13, we developed values for energy savings termed E_I. Among the appliances for which these savings comparisons were made, was the replacement of the MA 199-100. Three separate operating conditions were developed (termed operating-on cycles), and two product configurations were studied. The E_I value was energy savings in BTU's per year. Since uncertainty surrounds the basic assumptions, it seems inappropriate to derive just one energy-conservation estimate. It would seem more appropriate to use a range of conservation estimates based around the six scenarios presented in Table 13. Therefore, in Table 20, we develop energy savings estimates for each year for these six scenarios. It is then possible to develop a cumulative estimate of savings through the year 2000 for each scenario. The cumulative conservation estimates as a function of operating hours for both the condensing and non-condensing mode are presented in Figure 3. In reality, the applicable technique for accurately determining the actual energy conservation would be to derive a reasonable sample of water heater users and determine their current operating on-cycle. From these data, a distribution could be determined, and a statistical model employed to relate the sample to the overall population.

These curves provide an opportunity to test an operating-on cycle chosen from 0 hours per year to 8760, i.e., 365 days of the year x 24 hours a day. If all appliances were modeled in this fashion, it would be possible to make energy-saving comparisons, which were directly comparable. Further, the energy savings could be related to other subjective criteria to rank the benefits and the associated costs in order to prioritize product selection for replacement with new technology such as pulse combustion.

6. CONCLUSIONS

The ultimate objective of this program is to reach the market with the maximum number of units so that energy consumption can be reduced. Indeed, the impact of this type of program on the overall conservation of energy for the country should not be underestimated. The energy savings with only the AAMC MA 199-100 market converted to pulse combustion is estimated to be one-tenth of a quad of natural gas saved through the year 2000. If the entire 100-199,000 Btuh segment were converted, the estimated savings through the year 2000 could be 2.5 quads of natural gas. However, the hoped for outcome, is that the whole market will move on to a higher technology path of development, ultimately saving many times these amounts.

The secondary objective of the program is to accelerate the entry of the more efficient technologies into the marketplace, so that the energy efficiencies being introduced can be derived as soon as possible. The savings in time can be estimated differently for any of the competitive companies participating in the market. In this particular instance, the savings in time is estimated to be three to five years when contrasted with other internally developed products underway at AAMC.

TABLE 20. ENERGY SAVINGS ESTIMATES FOR TWO ENERGY EFFICIENCIES AND THREE LEVELS OF USE

		Condensing 93% Operating-On Cycle E_I Values			Non-Condensing 87% Operating-On Cycle E_I Values		
Year	In-Place Units Table 19	2920 Hours E_I = 156829000	4380 Hours E_I = 235244000	5840 Hours E_I = 313658000	2920 Hours E_I = 127570000	4380 Hours E_I = 191356000	5840 Hours E_I = 255141000
1982	3159	4.95×10^{11}	7.43×10^{11}	9.91×10^{11}	4.03×10^{11}	6.04×10^{11}	8.06×10^{11}
1983	6965	1.09×10^{12}	1.64×10^{12}	2.18×10^{12}	8.89×10^{11}	1.33×10^{12}	1.78×10^{12}
1984	11160	1.75×10^{12}	2.63×10^{12}	3.50×10^{12}	1.42×10^{12}	2.14×10^{12}	2.85×10^{12}
1985	14680	2.30×10^{12}	3.45×10^{12}	4.60×10^{12}	1.87×10^{12}	2.81×10^{12}	3.75×10^{12}
1986	18268	2.86×10^{12}	4.30×10^{12}	5.73×10^{12}	2.33×10^{12}	3.50×10^{12}	4.66×10^{12}
1987	19291	3.03×10^{12}	4.54×10^{12}	6.05×10^{12}	2.46×10^{12}	3.69×10^{12}	4.92×10^{12}
1988	20372	3.19×10^{12}	4.79×10^{12}	6.39×10^{12}	2.60×10^{12}	3.90×10^{12}	5.20×10^{12}
1989	21513	3.37×10^{12}	5.06×10^{12}	6.75×10^{12}	2.74×10^{12}	4.12×10^{12}	5.49×10^{12}
1990	22717	3.56×10^{12}	5.34×10^{12}	7.13×10^{12}	2.90×10^{12}	4.35×10^{12}	5.80×10^{12}
1991	23989	3.76×10^{12}	5.64×10^{12}	7.52×10^{12}	3.06×10^{12}	4.59×10^{12}	6.12×10^{12}
1992	25397	3.98×10^{12}	5.97×10^{12}	7.97×10^{12}	3.24×10^{12}	4.86×10^{12}	6.48×10^{12}
1993	26815	4.21×10^{12}	6.31×10^{12}	8.41×10^{12}	3.42×10^{12}	5.13×10^{12}	6.84×10^{12}
1994	28313	4.44×10^{12}	6.66×10^{12}	8.88×10^{12}	3.61×10^{12}	5.42×10^{12}	7.22×10^{12}
1995	29895	4.69×10^{12}	7.03×10^{12}	9.38×10^{12}	3.81×10^{12}	5.72×10^{12}	7.63×10^{12}
1996	31565	4.95×10^{12}	7.43×10^{12}	9.90×10^{12}	4.03×10^{12}	6.04×10^{12}	8.05×10^{12}
1997	33330	5.23×10^{12}	7.84×10^{12}	1.05×10^{13}	4.25×10^{12}	6.38×10^{12}	8.50×10^{12}
1998	35193	5.52×10^{12}	8.28×10^{12}	1.10×10^{13}	4.49×10^{12}	6.73×10^{12}	8.98×10^{12}
1999	37160	5.83×10^{12}	8.74×10^{12}	1.17×10^{13}	4.74×10^{12}	7.11×10^{12}	9.48×10^{12}
2000	39238	6.15×10^{12}	9.23×10^{12}	1.23×10^{13}	5.01×10^{12}	7.51×10^{12}	1.00×10^{13}
		7.04×10^{13}	1.06×10^{14}	1.41×10^{14}	5.73×10^{13}	8.59×10^{13}	1.15×10^{14}

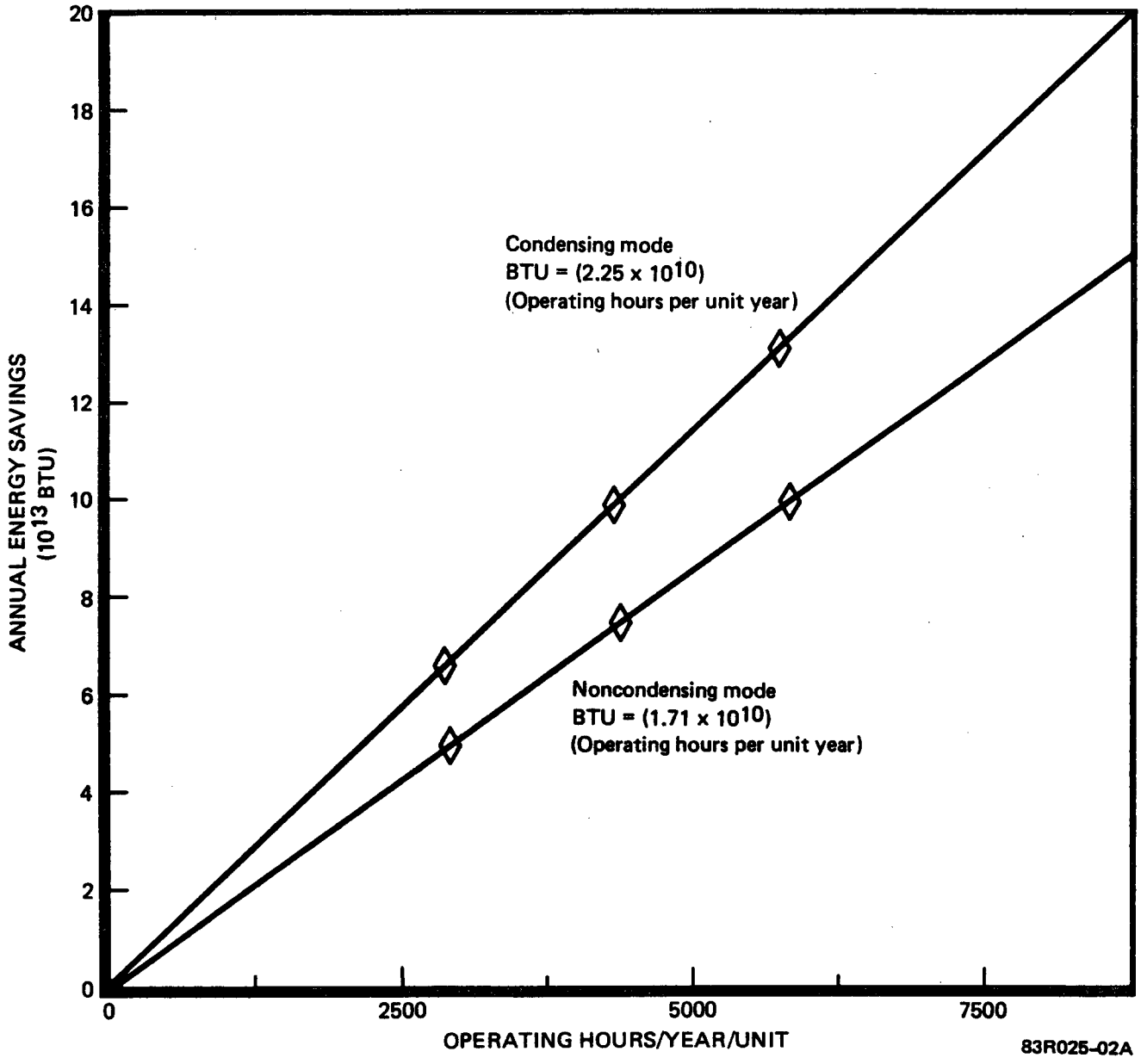

Figure 3. Cumulative Energy Savings for 1982-2000

The market segment selected, meets several important criteria for the assumption of risks associated with a new product introduction. The segment selected will represent a substantial part of the market when the product is introduced; approximately 31.9%. If the product is introduced in 1982, approximately 3200 units should be shipped with AAMC's 4.1% capture rate. Since shipments are a function of market demand and manufacturing capacity, the constraint perceived in marketing potential for this product, assuming a payback of less than two years, is manufacturing capability, not market demand. In other words, AAMC should be able to sell all they are capable of producing.

This task was completed and is presented in the context of a vigorous AAMC marketing of the pulse-combustion water heater. However, for nontechnical reasons, AAMC withdrew from participation in the project at about the time when most of the development was completed for the instantaneous unit.

REFERENCES

1. Commercial Energy Use: A Disaggregation by Fuel, Building Type, and End Use", ORNL/CON 14; Mr. Jerry R. Jackson, et al, Oak Ridge National Laboratory, February 1978.

2. "The Commercial Demand for Energy: A Disaggregated Approach", ORNL/CON-15, Mr. Jerry Jackson, et al, Oak Ridge National Laboratory, April 1978.

3. "Statistical Highlights", Gas Appliance Manufacturers Association, Inc., (Ten-Year Summary, 1970-1979).

4. Contact with Gas Appliance Manufacturers Association, Mr. John Langmead and Mr. Frank Standonik.

5. "Energy Efficiency Improvement of Residential and Commercial Gas Appliances, Phase I, R & D Planning", GRI-79/0028, Mr. P. E. Pickett, et al; Gas Research Institute, by Science Applications, Inc., Annual Report for 1979.

6. "Study of Opportunities for Energy Conservation in Commercial Gas Appliances in the State of California", TE 4245-46-79, Thermo Electron Corporation, October 1978.

7. "Energy Conservation Opportunities in Commercial Appliances", ORNL/Sub-7261/1, Mr. J. R. Hurley.

8. "Statistical Abstracts of the United States", U.S. Department of Commerce, 1979.

9. Raw data is taken from the "Producer's Prices and Price Indexes", U.S. Department of Labor, Bureau of Labor Statistics.

10. Conversations with Southern California Gas Company, Commercial Marketing.

83R025
Task 2

HIGHLY EFFICIENT COMMERCIAL PULSE-COMBUSTION GAS-FIRED WATER HEATER

TASK 2 - TECHNICAL DEVELOPMENT

FOREWORD

This report on the Technical Development, Task 2, is submitted as a requirement on UCC-ND, Subcontract 86X-24711C and is composed of two subtasks. These are the Design Specifications and Proposed Testing Procedures, Task 2.1, and the Tests and Test Results, Task 2.2.

The technical effort was managed by Dr. Emil A. Lawton, Manager, Advanced Programs of the Shock Hydrodynamics Division, Whittaker Corporation. The Principal Investigator was Mr. Larry Irwin, Physicist, and he was assisted by Mr. Arthur Lawler, Senior Engineer, and by Albert Flohr. The American Appliance Mfg. Corp. effort was coordiated by Mr. H. Jack Moore, Jr., Vice President Engineering, and he was assisted by Myron Denau, Production Engineer. Mr. Charles Koch, President of the Gas Appliance Laboratory, also served as a consultant. The assistance of Honeywell personnel, Karen Overhults and Joseph Vogels, in the design of the controls is gratefully acknowledged.

The Oak Ridge National Laboratory (ORNL) Technical Managers for this task were Mr. W. L. Cooper and Mr. V. O. Haynes. Their assistance and encouragement are acknowledged as well as that of Mr. William Levins, also of ORNL.

83R025
Task 2

ABSTRACT

Design specifications and proposed testing procedures were developed as guided by the market assessment and applicable standards for commercial water heaters. The proposed test procedures were closely followed in actual test program.

The test program consisted of construction of a series of easily assembled engineering models from which the pertinent geometry of the components of the water heater were derived. The selected sizes were then incorporated into a prototype model of an instantaneous water heater. The first prototype using a single 2-inch-diameter resonator proved to have inadequate heat transfer as well as producibility problems. A second prototype using four, easily produced 1-inch-diameter resonance tubes had excellent heat transfer characteristics.

The prototype instantaneous commercial water heater operated at a gas input rate of 185,000 Btu/h, and at a thermal efficiency of 97%, with exhaust temperature of 105°F. With air inlet and exhaust ducts of 16 feet each, the unit's operation generated sound pressure levels which were attenuated to 66 dBA at 39 inches from the unit. A small muffler inserted into the exhaust duct line further lowered the sound level to 64 dBA. A test for NO_x concentrations showed an average value of 42 ppm with a standard deviation of 1.8 while the unit operated at 187,000 Btu/h.

83R025
Task 2.1

HIGHLY EFFICIENT COMMERCIAL PULSE-COMBUSTION GAS-FIRED WATER HEATER

TASK 2 - TECHNICAL DEVELOPMENT

TASK 2.1

DESIGN SPECIFICATIONS AND PROPOSED TESTING PROCEDURES

83R025
Task 2.1

TABLE OF CONTENTS

	PAGE
TABLE OF CONTENTS	i
1. INTRODUCTION	1
2. SPECIFICATIONS	1
2.1 GAS INPUT RATE	1
2.2 PHYSICAL DIMENSIONS	2
2.3 SERVICE EFFICIENCY	2
2.4 STANDBY LOSS	3
2.5 DRAW-OFF TEST	4
2.6 ADAPTABILITY TO REPLACEMENT	4
2.7 IGNITION AND CONTROLS	4
2.8 SOUND LEVEL	5
2.9 APPLICABLE STANDARDS	5
2.10 SPECIFICATIONS SUMMARIZED	5
3. TECHNICAL DEVELOPMENT PROCEDURE	7
3.1 EXPERIMENTAL MODELS	7
3.1.1 Test Set-up for Component Design and Selection	7
3.1.2 Testing Procedures	7
3.2 PROTOTYPE TESTS	10

83R025
Task 2.1

HIGHLY EFFICIENT

COMMERCIAL PULSE-COMBUSTION GAS-FIRED WATER HEATER

TASK 2.1

DESIGN SPECIFICATIONS AND PROPOSED TESTING PROCEDURES

1. INTRODUCTION

The purpose of this task report is to describe the specifications that are to be achieved in the production unit, the steps in the technical development that were followed in developing the design, the applicable standards followed, and the testing procedures employed in the course of the effort.

Terms used in this task report are defined in the glossary at the end of the Task 2.2 report.

2. SPECIFICATIONS

The specifications established for the gas-fired water heater (GFWH) include the gas input rate in Btu/h, the physical size, water tank capacity, service efficiency, standby loss, draw-off capacity, adaptability to replacement, ignition, controls, venting, sound levels, reliability, and applicable ANSI standards.

2.1 Gas Input Rate

The results of the market survey indicated that 199,000 Btu/h units in both the storage and instantaneous types would have a maximum penetration of the market. This rate is an artifact of the code requirements in that, at 200,000 Btu/h, additional requirements are placed on the manufacturer; so industry practice has been to produce units just under this input rate. A more detailed review of the reasons for this selection may be found in the Task 1 Market Assessment. It should be pointed out that a unit with 70% service efficiency, will use 29% less gas than a conventional unit operating at the current efficiency standard of 50%.

The unit developed in this project was designed to operate at only one input rate even though pulse combustors can be designed with controls to utilize a potential turndown ratio of 2:1. The single input rate allowed for simplified controls and manual adjustment for maximum efficiency at the gas pressure regulator.

2.2 Physical Dimensions

Commercial water heaters are physically sized to be moved through conventional doorways and are commonly made with tank diameters of 24, 26, and 28 inches. The diameter was limited to 28 inches, in order to use existing tooling and to provide the easiest replacement for current models.

The height of the unit depended on the configuration and the final dimensions of the combustor as it was developed in the program. The maximum height was considered to be 78 inches.

The nominal water volume for a storage water heater is 80 to 100 gallons. The greater thermal efficiency of the pulse combustor indicated a possible reduction of this volume in favor of the advantages of compactness. The instantaneous water heater volume was to be as small as possible to just cover the heat-exchange components. Since instantaneous water heaters in California are defined as water heaters having an input-to-volume ratio exceeding 4,000 Btu/h per gallon, the volume of the water must be less than 50 gallons. The prototype instantaneous water heater was to be identical to the storage-type unit but narrower.

The requirements for stable, quiet operation of a pulse combustor require that both the gas input and air input to the flapper valves be decoupled. The volumes of the air and gas decouplers are a function the input rates and the peak pressure generated in the combustion chamber. They were designed to occupy minimum space and still provide effective decoupling of the pulsations and to attenuate the noise escaping from the valves.

2.3 Service Efficiency

The service efficiencies of conventional commercial GFWHs, which are approximately 50%, are considerably below their thermal or recovery efficiency, which are approximately 65%. The thermal efficiency for an instantaneous water heater and the recovery efficiency for a storage-type heater are measures of the efficiency of the unit to heat the water in the steady state. Recent requirements for thermal and recovery efficiencies are 70% for ANSI standard Z21.10.3-1975, Section 2.8, and 75% for the State of California.

The thermal efficiency of the instantaneous water heater was computed by the same formula used in ANSI standard Z21.10.3-1975 as in Sections 2.8, which is

$$E = \frac{W\ (T_2 - T_1)}{CF \times Q \times H} \times 100$$

where

E = thermal efficiency, %,

W = total weight of water heated, lbs.,

T_1 = average temperature of inlet water, °F,

T_2 = average temperature of drained water, °F,

CF = correction factor,

Q = total gas consumed as metered, $ft.^3$, and

H = total heating values of gas, $Btu/ft.^3$.

The service efficiency, which includes the effect of standby losses, is very much lower than the recovery efficiency. The high heating rates on conventional commercial units require large or multiple flues resulting in significant losses. Service efficiencies of 50% are common in the industry. Automatic dampers and other heat recovery devices are improving this figure, but the requirement of hot flue gasses for safe thermal venting, limit the efficiency attainable. Since venting of pulse combustors is simpler and lower exhaust temperatures was a design goal, the service efficiency was to be 70% or higher. This assumed a steady state thermal or recovery efficiency of 85% or better for heaters delivering water at 180°F.

2.4 Standby Loss

The standby loss was designed to meet or exceed the California standard for large GFWHs.

$$S = \left[2.3 + \frac{67}{CAP} \right] (100)$$

where: S = standby loss, in %/hr, and CAP = storage capacity in gallons.

For a one-hundred gallon water heater, this reduces the maximum standby loss allowed to 2.97%. The standby loss of a storage-type heater is the percent of the heat content of the stored water above room temperature which is lost each hour.

Since the pulse combustor is completely submerged in the tank and no flames are in direct contact with the tank, foamed polyurethane insulation can be used under the bottom of the tank. One inch of this insulation has a K factor of 0.11 to 0.14 as compared to 0.23 for conventional insulation. The one-inch polyurethane insulation has been found capable of meeting or exceeding the standby loss of 13.65 $Btu/h\text{-}ft.^2$. Jacket losses are the primary part of the standby loss in a pulse-combustion unit.

2.5 Draw-Off Test

The quantity and temperature of hot water delivered by the storage water heater will be determined by ANSI standard Z21.10.3-1975, Section 2.14, which requires it to "be capable of delivering as water above 120°F, 60% of the theoretical degree-gallon capacity of the tank above 120°F in a continuous draw-off at 85% or less of the actual storage vessel capacity, with the thermostat adjusted to give a top of tank temperature of 150 ±2°F." The theoretical degree-gallon capacity of the tank above 120°F shall be calculated by multiplying the actual tank capacity in gallons by (the actual top tank temperature, °F minus 120). The degree-gallon capacity of a 100 gallon tank will be 3000 degree-gallons and shall deliver 1800 degree-gallons in a continuous draw-off of 85 gallons or less.

2.6 Adaptability to Replacement

The units are to be no larger and probably smaller than a conventional commercial GFWH of the same hot water output. The installation will be similar. It was not anticipated that the heater would operate in the condensed phase, so a water drain was not planned. However, when the unit was designed to operate in the condensing mode, a drain was required.

A conventional flue is not required on a pulse-combustion water heater, but the exhaust can be vented through the space of a normal flue. In this case the vent tube must extend up the chimney. It would be more effective to vent the exhaust gases directly to the outside in most cases. The unit is to be designed with sufficient self-venting power to exhaust the combustion gases through 50 feet of plastic tubing, having a 2-in. diam.

2.7 Ignition and Controls

The required safety standards for a spark ignition system, as found in Section 2.7 of ANSI Z21.10-3-1975, will be followed. Since the combustion chamber is closed, the chamber and resonator must be purged before the gas-air mixture is admitted. The final automatic control system is similar to a related furnace ignition system, developed by the Shock Hydrodynamics/American Appliance Mfg. Corp. team, which used the following sequence:

> The chamber was purged with the starting blower for one minute, and the automatic gas valve opened at a low rate to match the blower unit. At the same time, the spark ignitor was started. At proof of flame at the flame sensor, the spark was turned off. If the flame did not establish in eleven seconds, the gas valve closed and a three-minute lockout was started. After establishment of the pulse combustion, the unit ran for one minute to heat up and the second stage of the gas valve opened so that the unit operated at full rate. The starting blower was turned off.

For the water heater, it was advantageous to use a one-stage gas valve since the unit does not heat up as a furnace would.

2.8 Sound Level

There is no applicable standard for the allowable sound level of commercial appliances. A good standard would be the noise level of the current appliances that it replaces. It should probably be less than 70 dBA at three feet from the unit. The pulse-combustion furnace operating at 80,000 Btu/h developed by Shock Hydrodynamics and American Appliance Mfg. Corp. generated 66 dBA at two feet away.

2.9 Applicable Standards

The design will have to conform to ANSI Z21.10.3-1975, "Vol. III, Circulating Tank, Instantaneous and Large Automatic Storage-Type Water Heaters", as applicable to this type unit. Also, the unit will be made to sell in California, so it will meet the standard set forth by the California Energy Commission under the California Administration Code, Title 24, Part 6, Article 2, Division 7, "Service Water Heating". The previous sections of this task have described applicable portions.

It should be also mentioned that the American Gas Association (AGA) is currently developing tentative standards for pulse-combustion applicances. Certification can be obtained under an interim standard.

2.10 Specifications Summarized

The specifications set for the preliminary design of the commercial pulse-combustion GFWH are summarized in Table 1.

TABLE 1. DESIGN SPECIFICATIONS OF THE PULSE-COMBUSTION GAS-FIRED WATER HEATER

PARAMETER	SPECIFIC MEASUREMENT	STANDARD OR REQUIREMENT
Gas Input Rate	199,000 Btu/hr	Market Penetration
Heated Water Temperature	180°F	Marketability
Physical Dimensions Diameter Height	 <28 in. <78 in.	 Installation

TABLE 1. DESIGN SPECIFICATIONS OF THE PULSE-COMBUSTION GAS-FIRED WATER HEATER (Continued)

PARAMETER	SPECIFIC MEASUREMENT	STANDARD OR REQUIREMENT
Tank Size		
Storage Type	100 gallons	Market Definition
Instantaneous Type	<50 gallons	
Thermal Efficiency		
Instantaneous Type	>85%	Market
Recovery Efficiency		
Storage Type	>85%	Market
Service Efficiency	>70%	Market
Standby Loss	<2.97%	California Energy Commission
Draw-Off Capacity	>60% of degree-gallon capacity above 120°F	ANSI Z21.10.3-1975, Sec. 2.14
Venting	50 ft. of 2 in. diam. plastic pipe	Market
Ignition	Intermittent	California Energy Commission
Sound Pressure Level (SPL)	<76 dBA at 3 ft. from unit (tentative)	Market

3. TECHNICAL DEVELOPMENT PROCEDURE

The steps followed in the technical development of the GFWH are described in this section. These steps essentially involved the studies with engineering models and two prototypes, from which performance parameters were obtained.

3.1 Experimental Models

The engineering models were constructed of pipes, pipe fittings, and other simple hardware. Their purpose included the determination of relative volumes and configurations which provided the necessary performance, the validation of the operation of key components such as the flapper valves, and the estimation of heat transfer. Estimates of noise level and the occurrence of operational problems were also determined with engineering models. When questions on design or other problems occurred, they were expeditiously addressed by experiments on the engineering model. Thus, some experiments with an engineering model were conducted during the prototype development.

3.1.1 Test Setup for Component Design and Selection. The test setup was a large tank so that the largest combination of various components could be studied as in Figure 1. The initial components fabricated were the coaxial flapper valves, combustion chambers, exhaust decouplers, and associated fittings. Three sizes of combination chambers and exhaust decouplers were fabricated for initial testing.

The engineering models were assembled and run in the tank to determine the operational parameters as listed in Table 2. The basic diagnostic information obtained were the first five parameters described in the table. These were used to determine the physical design dimensions described in the last five parameters. Other parameters that were determined included the mixing neck length, distributor head location in the neck, the gap between distributor head and neck, the spark ignitor location, and exhaust gas temperatures.

3.1.2 Testing Procedures. The engineering model was fitted with taps so that the mean pressure in the combustion chamber and the gas line pressure could be measured with water manometers. Thermocouples were used to measure gas temperatures at key locations such as the entrance and exit of the exhaust decoupler and the exhaust exit of the unit. Gas flow rates were measured using a dry-flow meter and the CO_2 and CO were sampled from a tap near the exhaust decoupler. They were measured on a Luft Infrared Analyzer (LIRA).

For the specified gas input rate of 199 kBtu/h, it was calculated that a gas opening area of about 0.1 in.^{2}, and a corresponding air opening area of 2 in.^{2} would be required. Tests were run at an air flapper opening ranging from 1.0 to 2.4 in.^{2}. At a given air setting, the gas flapper opening would be varied from 0.06 to 0.12 in.

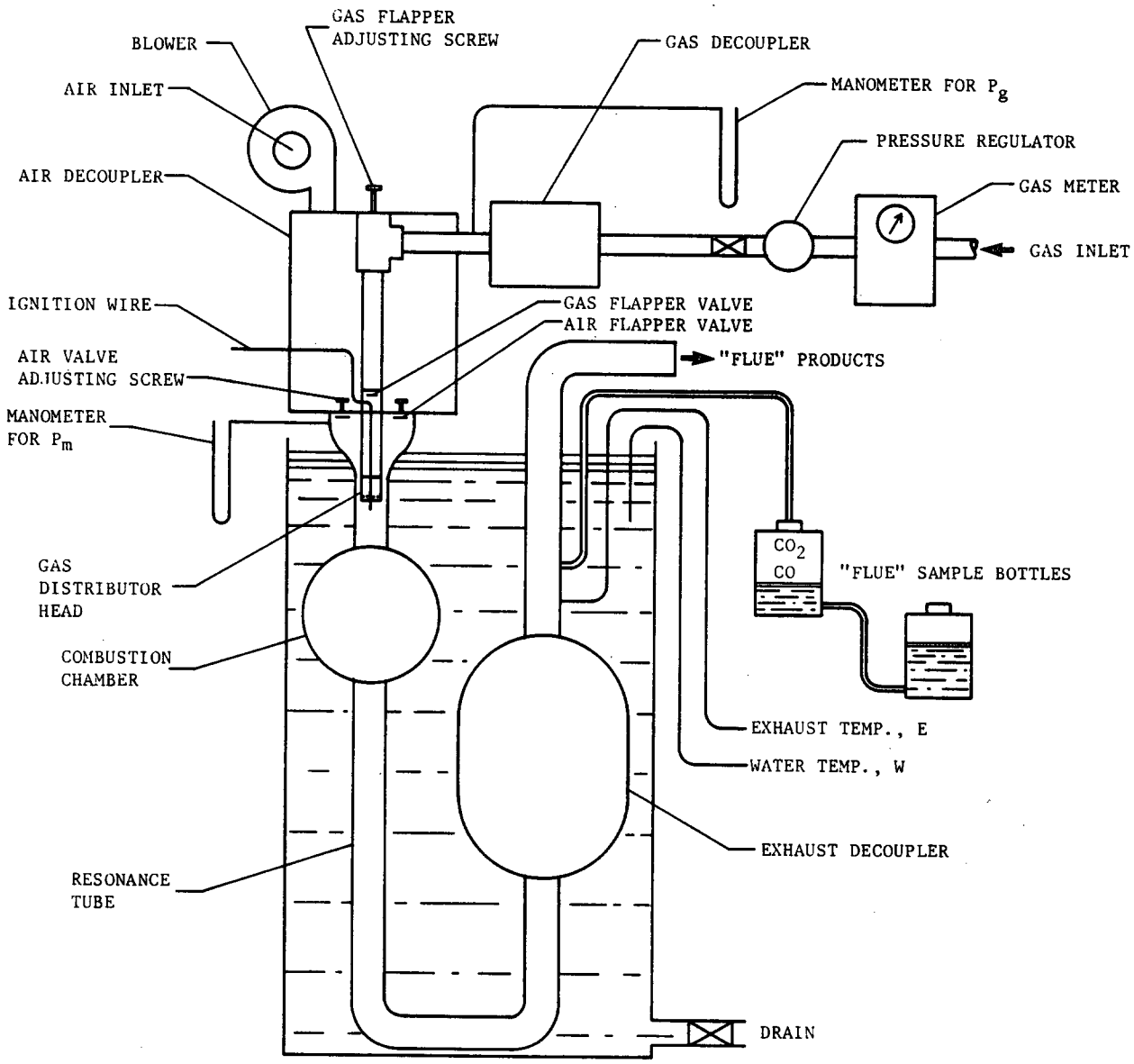

Figure 1. Test Setup for Engineering Model

TABLE 2. OPERATIONAL PARAMETERS FOR ENGINEERING MODELS

PARAMETER	DESIRED INFORMATION	TEST METHOD
1. Gas Input Rate, Btu/h	Starting Rate, Stable Rate	Dry Meter
2. Gas Inlet Pressure, P_g	Operative Conditions	Water Manometer
3. Chamber Mean Pressure, P_m	Operating Values	Water Manometer
4. Combustion Characteristics	Excess Air, CO_2 CO	Luft Infrared Analyzer
5. Sound Pressure Level (SPL)	Noise Level	B & K[a] and Quest[b] Sound Level Meters(SLM)
6. Relative Volumes of Components	Performance, Packaging	Above Parameters (1-5)
7. Valve Adjustments	Flapper Valve Spacings	Combustion Performance, Above Parameters (1-5)
8. Resonator Length	Operational Stability, Frequency, Gas Input Rate	Combustion Performance, Above Parameters (1-5)
9. Air Decoupler Volume	Operational Stability, Gas Input Rate	Combustion Characteristics and SPL
10. Gas Decoupler Volume	Operational Stability, Gas Input Rate	Combustion Performance

[a] Bruel and Kjaer Instruments, Inc.

[b] Quest Electronics

In a given test, the unit was started manually and brought to its full gas input rate. For given air and gas openings and air-to-gas ratios, P_g and P_m were noted, exhaust samples were analyzed for CO_2 and CO concentrations, and the gas input rate was timed on a dry meter for 1 to 5 cycles or $ft.^3$. The relative smoothness or roughness of the noise of operation was also observed. These diagnostic data would be compared as individual component dimensions were developed. Other diagnostic data that were noted when applicable, were the temperatures of the exhaust gases and the heated water, and the sound pressure levels.

3.2 Prototype Tests

The prototypes incorporated the design information obtained with the experimental model. They tested configurations for the final prototype model, which was designed to fit into a standard tank with the appropriate openings and inputs. The same tests performed on the experimental models were performed on the prototypes, but were more directed to meeting the specifications (described in Section 2 of this task) and producibility considerations. Thus tests were also made on the prototype's steady-state thermal efficiency. When the above parameters were determined, the controls were developed for the automatic fail-safe operation of the unit.

The completion of Task 2 provided a prototype system that should be sufficient to indicate the configuration, dimensions, critical components, and performance of a production model water heater. From these data, the production engineering required to mass-produce the units can be determined. Then, a limited number of units could be fabricated for on-site engineering evaluations.

83R025
Task 2.2

HIGHLY EFFICIENT COMMERCIAL PULSE-COMBUSTION GAS-FIRED WATER HEATER

TASK 2 - TECHNICAL DEVELOPMENT

TASK 2.2

TESTS AND TEST RESULTS

TABLE OF CONTENTS

		PAGE
	TABLE OF CONTENTS	i
1.	INTRODUCTION	1
2.	ENGINEERING MODEL	1
	2.1 GAS AND AIR FLAPPER VALVES	2
	2.2 DEVELOPMENT OF COMPONENT PARAMETERS	5
	2.2.1 Combustion Chamber, Exhaust Decoupler, and Resonance Tube	5
	2.2.2 Other Components	5
	2.2.3 Component Tests	5
	2.2.3.1 Establishment of Baseline Conditions	5
	2.2.3.2 Volumes of Combustion Chamber and Exhaust Decoupler	6
	2.2.3.3 Neck Length and Distributor Head	6
	2.2.3.4 Resonator Length	9
	2.2.3.5 Gas and Air Decoupler Volumes	10
	2.2.3.6 Air Valve Configuration	11
	2.2.4 Analysis of Data	12
	2.2.5 Heat Transfer Studies	12
	2.2.6 Component Parameters Selected for First Prototype	13
3.	THE FIRST PROTOTYPE	13
	3.1 PROTO I DESIGN AND CONSTRUCTION	13
	3.2 TESTS OF PROTO I	14

TABLE OF CONTENTS

		PAGE
3.2.1	Gas Input Rate	14
3.2.2	Exhaust Gas Temperatures	14
3.2.3	Stratification Studies	14
3.3	CONCLUSIONS ON PROTO I	18
4.	THE SECOND PROTOTYPE	18
4.1	COMBUSTION TEST RESULTS	21
4.2	HEAT TRANSFER IMPROVEMENTS	21
4.3	INITIAL SOUND DATA	21
4.4	STAMPABLE VALVES	21
4.5	THE INSTANTANEOUS MODEL	22
4.5.1	Construction of the Instantaneous Model	22
4.5.2	Resultant Dimensional Modifications	23
4.5.2.1	The Resonance Tubes	23
4.5.2.2	The New Air Valve Chamber and Neck	23
4.5.2.3	The Air Decoupler	25
4.5.2.4	The Gas Decoupler	25
4.5.3	Electrical Controls	25
4.5.4	Performance of the Instantaneous Water Heater	26
4.5.4.1	Performance vs. Water Temperature	26
4.5.4.2	Thermal Efficiency	26
4.5.4.3	Sound Pressure Levels	26

TABLE OF CONTENTS

		PAGE
4.6	NOISE REDUCTION	31
4.6.1	Outlet Noise Reduction	31
4.6.1.1	Design of Muffler/Secondary Heat Exchanger	31
4.6.1.2	Baseline Tests at the New Laboratory	31
4.6.1.3	Results of Preliminary Test on Muffler/SHE	33
4.6.1.4	Installation of SHE	33
4.6.2	Inlet Noise Reduction	36
4.6.2.1	Acoustic Materials	36
4.6.2.2	Baffling	38
4.6.3	Additional Treatments	38
4.6.3.1	Ducting	38
4.6.3.2	External Mufflers	38
4.6.4	Acoustic Test Results	38
4.6.4.1	Analysis of Acoustic Attenuators	41
4.6.4.2	External Muffler Test Results	41
4.7	FINAL CONFIGURATION	41
4.7.1	Component Description	41
4.7.2	Operational Data	49
5.	SUMMARY AND CONCLUSIONS	51
6.	RECOMMENDATIONS FOR FUTURE WORK	51
	GLOSSARY	52

TASK 2.2 - TESTS AND TEST RESULTS

1. INTRODUCTION

Task 2.2 experimentally developed the engineering and prototype models. Starting with known guidelines for the basic pulse-combustor design parameters, various components were fabricated for tests in an engineering model where physical dimensions were refined to achieve the desired performance at 199 kBtu/h. The resulting dimensions were incorporated into a production prototype to further test thermal efficiency, compactness, producibility, noise attenuation, and overall dimensional conformity to current production units. The result was an instantaneous prototype commercial water heater, which operated at 185 kBtu/h with 97% thermal efficiency. The details of this development are given here.

2. ENGINEERING MODEL

The engineering model more properly was a series of models constructed of the simplest type of hardware which duplicated the essential configuration of potential designs. The components were easily interchanged and various adjustments were made expeditiously so that the effects of these changes were quickly evaluated. The components of the engineering model include the air and gas decouplers, air and gas flapper valves, distributor head and neck, combustion chamber, resonance tube, exhaust decoupler and exhaust pipe. In addition, the system was equipped with a starting blower on the air decoupler and a spark ignition system. The combustor assembly, consisting of the neck, combustion chamber, resonator, and exhaust decoupler, was immersed in a large tank of water.

The information desired was the dimensions of these components that provided good, smooth combustion at a minimum sound pressure level and which gave the best heat transfer to the water. One specific objective was to find the minimum volumes for the combustion chamber, exhaust decoupler, gas and air decouplers, and minimum length of resonator to achieve the greatest compactness and to have the highest frequencies possible to be dominant in the sound spectrum. However, too small a unit results in high peak pressures which result in high sound levels, lower gas flow rates, and/or inadequate surfaces for heat transfer. Also the development of the valving components required testing of the dimensions of air and gas inlet openings and mixing areas. The air and gas enter through separate flapper valves (concentric design) which govern the air and gas flow by the amount of their opening. However, the mixing of air and fuel is governed by openings in the gas distributor head and the spacing (gap) between its circumference and the neck wall along which air flows. These dimensions must be established for complete combustion at a gas input rate of

199,000 Btu/h utilizing a maximum gas line pressure of 5 in. w.c. In addition, since the air inlet ports are known to transmit the most intense sound waves directly from the combustion chamber, minimizing the air flapper spacings quite effectively lowers noise levels. The distance from the air valve to the combustion chamber was also minimized as required for compactness. The first step was the design and construction of gas and air flapper valves with the valves constructed out of brass and the flapper disc made of teflon.

2.1 Gas and Air Flapper Valves

The type of valve selected for the water heater was the mechanical flapper valve. The air and gas valves were concentric insofar as they were each designed on the same axis, which was also the axis of the neck and the combustion chamber. Aerodynamic valves are inherently noisier than flapper valves, are not easily adjustable, and are more suitable for high thrust applications. Separated flapper valves do have important advantages but more extensive experience at our laboratory with the concentric valves prompted our selection of the latter type.

The various formulas for sizing and valve design, as given in AGA Bulletin 107, were programmed on our in-house computer. Designs were obtained for three combustion volumes and three air valve configurations. Air valves utilizing two rings of ports and two ring-type flappers, three rings of ports and three ring-type flappers, and three rings of ports with one disc-type flapper were all considered. The gas valve in all cases used one ring of ports and disc-type flappers.

All the various designs were summarized for comparison. The best combination of parameters was the design of an air valve with two rings of ports of 0.250 in. in diameter and two ring-type flappers. The gas valve had 0.177 in. diameter holes. The number of ports in each valve for each combustion chamber size is summarized in Table 1.

The computer design for the 11-1/2 in. diameter combustion chamber was selected. All of the designs assumed flapper spacings of 0.035 in. Holding the number and size of valve ports constant, flapper spacing were calculated for each combustion chamber size. It was found that adjustment for all the combustion chambers could be made with flapper spacings between 0.026 in. and 0.035 in.

To expedite extensive tests on the amount of air and gas openings required under many changing conditions, a valve was designed that could be easily adjusted during test operations. Figure 1 is an assembly drawing of concentric air and gas valves. This shows the single adjusting screw for the gas and one of the three adjusting screws for the air which were calibrated in thousandths of an inch.

The selection of the number of ports and the amount of flapper spacing was guided by the desire to minimize the noise generated, to obtain the required input rates, and for ease of manufacture. For example, a system having P_k of 34 in. w.c. would generate noise less than a system having P_k of 51 in. w.c.

TABLE 1. PEAK AND MEAN PRESSURES OBTAINED WITH DIFFERENT SIZES OF COMBUSTION CHAMBERS AND DECOUPLERS AND NUMBERS OF HOLES NEEDED IN FLAPPER VALVES

COMBUSTION CHAMBER		EXHAUST DECOUPLER				MEAN PRESSURE (a)	PEAK PRESSURE (a)	GAS VALVE PORTS	AIR VALVE PORTS	
Diam. (in.)	Vol. (V_c) (in.^{3})	Diam. (in.)	Cylinder Length (in.)	Vol. (V_d) (in.^{3})	V_d/V_c	P_m (in w.c.)	P_k (in w.c.)	N (b)	N_1 (c)	N_2 (d)
11.5	796	11.5	7.7	1596	2.0	9.5	34.0	12	48	34
		11.5	13.0	2147	2.7					
		16.0	0	2145	2.7					
		16.0	9.9	4135	5.2					
10.0	524	11.5	0	796	1.5	11.0	39.5	12	44	30
		11.5	7.7	1596	3.0					
		16.0	0	2145	4.1					
8.0	268	10.0	0	524	2.0	14.0	51.0	9	39	25
		11.5	0	796	3.0					
		11.5	7.7	1596	6.0					

(a) Calculated for a single 2-in. diam. resonator.
(b) N = number of holes in gas flapper valve plate.
(c) N_1 = number of holes in outer ring of air valve.
(d) N_2 = number of holes in inner ring of air valve.

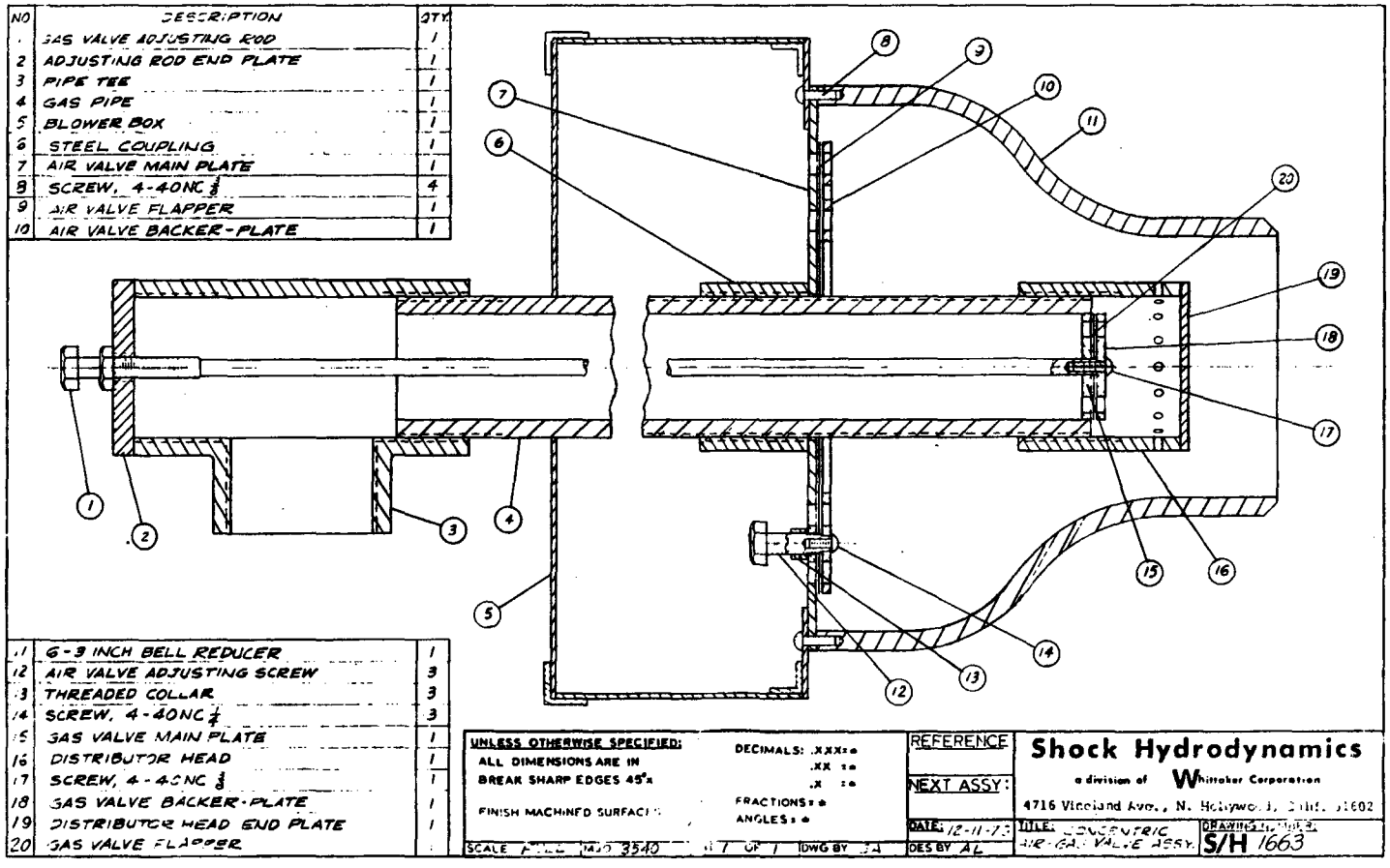

Figure 1. An Assembly Drawing of Concentric Air and Gas Valves

2.2 Development of Component Parameters

2.2.1 Combustion Chamber, Exhaust Decoupler, and Resonance Tube. Since the combustion chamber, resonator, and decoupler are submerged and have water pressure on their external surfaces, it is desirable for them to be either spherical or cylindrical with spherical ends for mechanical strength.

From previous work on pulse-combustion furnaces, spherical combustion chambers are known to work well. Spherical combustion chambers with 8, 10, and 11-1/2 in. diameters were fabricated.

Exhaust decouplers were made from 10, 11-1/2, and 16 in. diameter hemispheres and cylinders rolled by American Appliance Mfg. Corp. Volumes of these decouplers provided tests for at least three V_d/V_c ratios for each combustion chamber as well as different piping connection arrangements. These volumes are listed in Table 1.

Initially a 2-in. diam. 45-in. long pipe was selected for the resonator. With this information, the operating mean pressures and peak pressures were calculated for each combustion chamber size. These pressures are tabulated in Table 1, which outlines general test parameters.

2.2.2 Other Components. Various diameters of gas distributor heads were prepared as well as different lengths of nipples to determine the optimum location of the distributor head in the neck of the combustor. The spark ignitor was a conventional spark plug protruding through the end of the distributor head so that the spark was about 0.75 inch downstream of the gas inlet. The ignition wires ran back through the nipple through the air valve main plate to the air decoupler.

Air decouplers were not used in the first firing, but a 94 dBA noise level (101 dB-lin) at 204,000 Btu/h dictated that one be used. A gas decoupler was needed to obtain stable combustion.

2.2.3 Component Tests

2.2.3.1 Establishment of Baseline Conditions. The development plan for determining component parameters was to first assemble the engineering model so that satisfactory combustion was obtained at or near the design input rate of 199 kBtu/h. Satisfactory combustion was defined as stable, non-erratic burning as determined by the sound, and having a CO concentration in the exhaust of 0.04% or less (air free).

During the initial studies in establishing the baseline, it was soon found that the 2-1/2 inch neck was inadequate for the configuration employed and the smallest exhaust decoupler (1596 in.^{3}) also was too small. Modification of the system to accept a 3-in.-diam. neck and the largest exhaust decoupler allowed the baseline conditions to be achieved. For example, Run 37 in Table 2 had 9.6% CO_2 and 0.005% CO at a gas input rate of 198 kBtu/h. In

this configuration, a 6-inch long neck was employed and the distributor head was located just inside the upstream end of the neck. The valve adjustments were such that the A_{ea}/A_{eg} ratio was 17 and the P_g was 2.5 in. w.c. A 45 in. long resonator was used.

2.2.3.2 Volumes of Combustion Chamber and Exhaust Decoupler. When the largest combustion chamber (796 in.^{3}) was connected with a 45-in long, 2-in. diam. resonator to the 1596 in.^{3} exhaust decoupler, the unit operated very roughly and sputtered. The next smaller combustion chamber (524 in.^{3}) did perform satisfactorily with the largest decoupler, 4135 in.^{3} (Table 3, Run 62). CO_2 and CO concentrations in the combustion products were 9.6 and 0.006%, respectively, at a firing rate of 198 kBtu/h. More encouraging was that a smaller combustion chamber, 2145 in.^{3}, performed about as well with this exhaust decoupler volume (Table 3, Run 65), giving 10.2% CO_2 and 0.013% CO at 197 kBtu/h. However, the operation was marginal because any attempt to increase the firing rate by varying gas or air inputs brought the CO concentration above 0.04%. With a longer (54 inch) resonator, selected to compensate for the smaller volume of the chamber, combustion improved as in Table 3, Run 70, where CO_2 was 10.0% and CO was 0.006% at a rate of 198 kBtu/h.

The smallest combustion chamber (volume = 268 in.^{3}) operated satisfactorily with the 2145 in.^{3} decoupler (Table 3, Run 73), i.e., 9.8% CO_2, 0.016% CO at a rate of 196 kBtu/h. But this required a 60-in. resonator and the operation was sensitive to slight changes in conditions.

2.2.3.3 Neck Length and Distributor Head. Using the 796 in.^{3} (largest) combustion, various lengths of 3-inch-diameter necks were tested to determine the most compact length required for a 200 kBtu/h input and acceptable combustion products. Test results showed the most compact length to be 6 in. But this required the use of the 1.9 in. diam. distributor head. A 1.5-inch-diameter distributor head was also tested but was found to require a longer neck. Table 2 shows pertinent test results.

Both distributor heads were also tested in two general locations: (1) in the bell reducer (air valve housing) near the air flapper valve, and (2) in the neck near the bell reducer. The 1.9-inch distributor head functioned well in both locations.

The 1.9 in. distributor head was then tested (Table 2, Run 42) in a location 1-1/2 in. further downstream into the neck than it was on Table 2, Run 37. The purpose was to look for possible improvement in combustion and to see if the flame could be moved still further from the air flappers. However, this resulted in worse combustion, the firing rate dropping from 198 to 150 kBtu/h, CO_2 dropping from 9.6 to 7.9% and CO rising from 0.005% to 0.018% (Table 2, Runs 37 and 42, respectively), and would not run when Pg >2 in. w.c. Changing the downstream position from 1-1/2 to 1/2 in. (Table 2, Run 43) also resulted in 7.9% CO_2 and 0.019% CO but the firing rate increased to 196 kBtu/h.

TABLE 2. TEST DATA ON NECK, DISTRIBUTOR HEAD, AND RESONATOR

	Run No.	Distr. Head Diam. (in.)	Neck Length (in.)	Distr. Head Loc.	Air/Gas Orifice Ratio	Gas Input Rate kBtu/h	Gas Line Pres. in.wc	Mean Oper. Pres. in.wc	CO_2 %	CO %
45 INCH RESONATOR	31	1.9	10	Neck	31	196 in.wc	5	6	8.1	0.014
	31	1.9	10	Neck	25	215	5	8	9.0	0.016
	20	1.9	10	Bell Reducer	25	211	5	8-9	9.0	0.008
	30	1.9	10	Neck of Bell Reducer	46	170	5.3	5	7.7	0.022
	37	1.9	6	Neck	17	198	2.5	8	9.6	0.005
	28	1.9	6	Bell Reducer	25	210	5	8	10.2	0.008
	33	1.5	10	Neck	17	198	2.5	7-9	8.7	0.006
	35	1.5	10	Bell Reducer	15-37					
	36	1.5	10	Neck of Bell Reducer	18	196	3	5 1/2-7 1/2	8.6	0.006
	38	1.5	6	Neck	22	156	1.4	5 1/2-7 1/2	7.0	0.044
	39	1.5	6	Bell Reducer	21	171	1.9	5-7	8.2	>0.1
	42	1.9	6	Neck +1-1/2"	19	154	2.2	6-6 1/2	7.9	0.018
	43	1.9	6	Neck +1/2"	25	196	4.5	7-8	7.9	0.019
	44	1.9	5	Neck	25	185	2	6 1/2-7 1/2	6.6	0.021
72 INCH RESONATOR	48	1.9	10	Bell Reducer	23	225	2.6	11-13	11.0	>0.1
	49	1.9	10	Neck	40	220	0.7	13-15	8.9	0.013
RESONATOR TESTS		1.9	6	Neck						
	50	72 in. Resonator			17	205	1.1	11	9.1	0.007
	51	93 in. Resonator			20	201	1.1	11	7.8	0.012
	52	30 in. Resonator			26	164	3.7	3.9	10.4	>0.1
	53	38 in. Resonator			34	154	2.9	3	9.5	0.013

TABLE 3. SUMMARY OF EXPERIMENTAL DATA ON COMPONENT DIMENSIONS

Run No.	Gas Dcplr. Vol. (in^3)	Comb Chmb Vol. (in^3)	(2 in diam) Resonator Length (in.)	Exhst. Dcplr. Vol. (in_3)	Input Rate (kBtu/h)	Gas Line Pressure P_g (in. w.c.)	Mean Pressure P_m (in. w.c.)	CO_2 (%)	CO (%)	Exhaust Gas Temp. (°F)
59	2x141	796	60	4135	201	4.0	11.5	9.4	0.002	
60	2x141	796	45	4135	201	3.7	9.5	10.2	0.007	
61	268	796	45	4135	200	3.2	9.5	10.0	0.008	
62	268	524	45	4135	198	3.0	8.5	9.6	0.006	
63	268	524	45	4135	200	2.8	8.9	-	0.0095	
63	268	524	45	4135	198	2.9	8.2	9.7	0.012	
64	141	524	45	4135	199	2.9-3.1	9.5	9.7	0.020	
65	268	524	45	2145	197	3.4	7.0	10.2	0.013	490
66	268	524	45	2145	194	5.1	5.6	10.3	0.044	
67	268	524	60	2145	201	2.9	10.8	8.6	0.009	530
68	214	524	60	2145	208	2.9	11.5	8.8	0.007	540
69	214	524	54	2145	201	4.0	9.0	9.2	0.007	520
70	141	524	54	2145	200	4.1	8.3	9.2	0.006	540
70	141	524	54	2145	198	3.0	9.7	10.0	0.006	
70	141	524	54	2145	199	4.5	7.7	10.0	0.0095	570
72	141	268	54	2145	197	5.0	8.9	10.2	Off Scale	490
73	141	268	60	2145	196	2.0	7.7	9.8	0.016	580
74	214	268	60	2145	201	1.8	7.5	10.4	0.071	
74	214	268	60	2145	198	1.5	6.5	10.3	0.077	
78	214	268	60	2145	196	4.0	7-10	9.6	0.052	
79	214	268	60	2145	198	3.0	6.3	10.4	0.026	

From these data we concluded that the best results in firing rate and combustion are attained by using the 1.9-in. diameter distributor head located upstream in a neck which is 6 in. or longer.

2.2.3.4 Resonator Length. Various lengths of resonators were tested as alternatives to the 45-in. length used in the above tests. The largest combustion chamber and exhaust decoupler were used in these experiments. Resonators of 72 and 93 in. were tested to observe the extent to which the additional heat transfer surface would lower exhaust temperatures before entering the planned secondary heat exchanger (SHE). Since the SHE would be used as a preheater of incoming water, these temperatures should be as close as feasible to 200°F to avoid excessive temperatures in the incoming water when it is "off" (not flowing). Use of the 93-in. resonator resulted in lowering exhaust temperatures to only 240°F (as opposed to 550°F for the 45 in. resonator). Excessive temperature in the SHE would cause greater-than-necessary standby losses. Increasing resonator length to provide this additional heat transfer surface had the detrimental effect of raising the noise level at the second octave (63 Hz center-band frequency) to the dominating proportion. (Data are given in Table 4 and Figure 2.) This frequency would be much more difficult to muffle and thus longer resonators were not pursued.

The 72 in. resonator resulted in an exhaust temperature of 330°F. With this resonator another comparison was made between distributor head locations. CO levels were improved by locating the distributor head in the neck (Table 2, Run 49) rather than in the bell reducer (Table 2, Run 48). Both of the longer resonators provided good combustion (Table 2, Runs 50 and 51) at high gas input rates.

Shorter resonators of 30 and 38 in. were also tested to observe what extent the dominating noise frequency could be raised. Some of these data are also given in Table 4 and Figure 2. In this case, exhaust temperatures would have to be lowered by the use of other kinds of heat transfer surfaces, e.g., fins. These shorter lengths had a detrimental effect on the firing rates attainable. The highest firing rate attained with the 30 in. resonator was 182 kBtu/h with excessive CO. The highest rate attained with a 38 in. resonator was 190 kBtu/h, but was 154 kBtu/h with good combustion. Previous experience had also indicated that shortening the resonator length reduced the maximum gas input rate that a pulse combustor could accommodate and still retain good combustion.

We concluded from these tests that our minimum resonator length would be about 45 in., which at this point in the development of the engineering model, was the most desirable length. Lengths of up to 6 ft. were possible alternatives. However, this would require a close observance of the sound spectrum, as increased resonator lengths shift the sound spectrum to lower frequencies. It should be noted that the smaller combustion chambers required a somewhat longer resonator but the sound spectrum did not change substantially. Another important conclusion was that even with the largest components, additional metal heat transfer surface is required to lower flue gas temperatures below 300°F to obtain thermal efficiencies in excess of 85%.

TABLE 4. OCTAVE ANALYSES OF ENGINEERING MODEL USING RESONATORS OF 93, 45, AND 30 INCHES

Test Run No.	Resonator Length (in.)	SPL dBA	SPL dB lin	OCTAVE BANDS WITH CORRESPONDING CENTER-FREQUENCIES (Hz) 1 31.5	2 63	3 125	4 250	5 500	6 K	7 2K	8 4K	9 8K	10 16K	11 31.5 K	Gas Input Rate (kBtu/h)
51 A	93	92	100	88	98-1/2	90	84	91	88	85	79	73	60	42	164
51 B				-12	-1 1/2	-10	-16	-9	-12	-15	-21	-27	-40	-58	
54 A	45	95	103	82	98	100	88	92	90	90	85	80	65	48	198
54 B				-21	-5	-3	-16	-11	-13	-13	-18	-23	-38	-55	
52 A	30	92	98	70	85	96	82	93	88	82	76	74	63	44	164
52 B				-28	-13	-2	-16	-5	-10	-16	-22	-24	-35	-54	

A: Absolute Values, dB
B: Relative Values (to Overall, Linear SPL) in dB below linear, broad-band

2.2.3.5 Gas and Air Decoupler Volumes. The adequacy of the gas-decoupler volume was examined by installing a single 268 in.^{3} spherical decoupler in place of two smaller cylinders (in series) having a combined volume of 283 in.^{3}. There was no noticeable change in the satisfactory performance of the unit. When only one of the two cylinders (141 in.^{3}) was used for decoupling, the performance was still unchanged. Thus the gas-decoupler volume can be relatively small.

The air decoupler had a volume of about 1000 in.^{3} with an inlet opening of 6.25 in.^{2}. The air flapper valve is its outlet, generally 1.5 to 2.5 in.^{2} in area. It was the only one used in this phase and consistently demonstrated an adequate volume in terms of combustion-air supply. That it was adequate had been demonstrated several times merely by removing the cover while the system is operating and demonstrating that there was no change in performance of the combustor. This volume was not minimized since the greatest levels of sound emanate from the air valve and the large volume, appropriately damped, was most effective in muffling the sound.

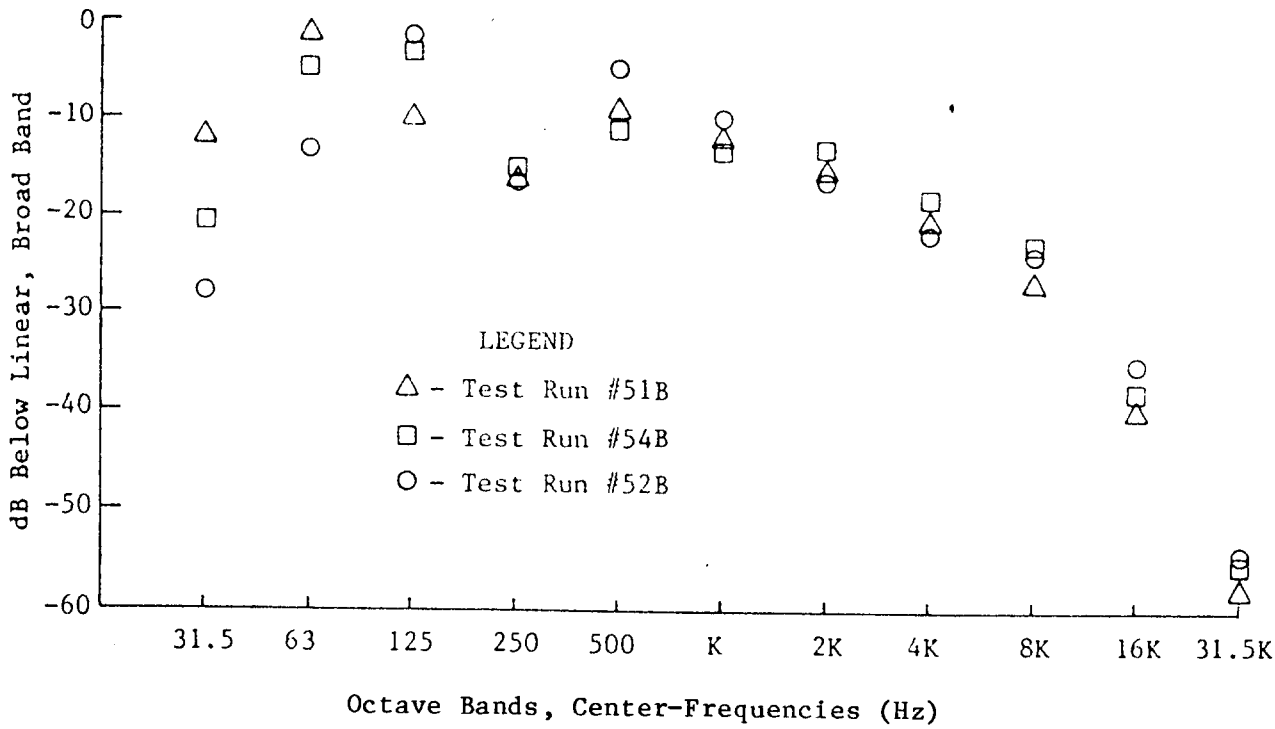

Figure 2. Graphical Representation of Data in Table 3B.

LEGEND

- Test Run #51B

- Test Run #54B

- Test Run #52B

2.2.3.6 Air Valve Configuration. Since the spacings in the flapper valves required for the 268 in.^{3} combustion chamber were becoming very small (as low as 0.015 in. vs. a more normal 0.030 in.), it was decided to test operation using fewer air inlet ports and wider flapper spacings by masking off the air inlet ports with masking tape. All of the ports of the inner ring were sealed, then all of the ports of the outer ring. The spacings were increased to provide the equivalent areas with the following results:

First, there was no improvement in combustion products but rather an increase in both CO_2 and CO concentrations.

Second, the unit ran better when only the inner row of air inlet ports were used than it did when only the outer row of ports were used. For the same A_{ea}, A_{eg}, and P_g, the use of inner ports resulted in a higher P_m and a higher gas input rate. Also when they operated at the same input rate, P_m was still higher when only the inner ports were used (7.3 vs. 6.2 in. w.c.). When half of the ports in each row was used, P_m was 6.9 in. w.c. under otherwise identical conditions. This indicated that the inner ports had more effect on the operation of the unit, and that maybe the excess volume of the bell reducer was having a deleterious effect on its operation.

Third, holding A_{ea} constant and increasing the air spacings from 0.031 in. to 0.078 in. increased the noise levels from 94 dBA and 101 dB-lin to 97 dBA and 105 dB-lin, effectively doubling the noise from the same gas input rate.

Because of the second and third points, it was decided to minimize the air-valve-housing volume by using a 6 x 3-in. bushing rather than the bell reducer. This reduced the volume of the air valve housing about 60% from 100 in.^{3} to 40 in.^{3} (by rough calculation, i.e., ± 3 in.^{3}).

2.2.4 Analysis of Date. Table 3 shows the P_m, CO_2 and CO concentrations, and exhaust temperatures resulting from the use of various combinations of components, when the unit was fired at a nominal 199 kBtu/h. Each run was adjusted for input rate and CO level by two means: (1) air- and gas-flapper-valve spacing changes (not shown on Table 3) and (2) pressure regulation as shown in P_g. Observations of P_m varied from 6.3 to 11.5 in. w.c. overall, but it was their variation for a given combustion chamber and resonator set (and constant input rate) that were not to be expected according to A.G.A. Bulletin 107. By contrast, Runs 62 to 64 show P_m to range from 8.2 to 9.5 in. w.c. (a 7% variation); Runs 65 and 66 give a range of 5.6 to 7.0 for an 11% variation; Run 70, 7.7 to 9.7, and 11% variation; Runs 73 and 74, 6.5 to 7.7, an 8% variation. However, in Run 74, P_m was observed for 25 settings of openings for air and gas, and various adjustments of the pressure regulator (P_g). When P_m was plotted against total effective area of both gas and air openings ($A_t = A_{ea} + A_{eg}$) an inverse relationship was shown.

2.2.5 Heat Transfer Studies. To lower exhaust-gas temperatures and maximize thermal efficiency, a SHE was planned to be added to the prototype, external to the main tank, to preheat incoming water. To prevent boiling this water, which is under pressure of 65 to 70 psi during the nondraw condition, exhaust gases must leave the exhaust decoupler at a temperature of less than 300°F. In the engineering model, gases exited the exhaust decoupler at temperatures ranging from 500 to 600°F depending to some extent on the amount of excess air. One experiment showed this temperature to increase from 540 to 610°F as the A_{ea}/A_{eg} was increased from 15.7 to 22.7, which increased the excess air.

Lowering the exhaust decoupler gas temperatures to 300°F required additonal heat exchange surface. Minimizing the production cost of adding such surfaces is critical and this was explored on the engineering model. In the first approach, studs were projected welded onto a 24-in. upstream section of the resonance tube. Tests showed that no significant reduction in exhaust gas temperatures was obtained. It was concluded that studs do not provide enough thermal conducting metal contact with the combustor surface to shunt the heat adequately, and that something involving seam welds would provide more conductive area for a greater heat flux.

As an alternative it was considered that the exhaust decoupler could be made a more effective heat exchanger by adding structures inside of it to divert and sweep a larger portion of the gases along its wall. Such devices would have the bonus effect of diffusing and dissipating noise which would otherwise be emitted through more direct exhaust paths. One such diffuser added to the inlet of the exhaust decoupler of the engineering model did drop the temperature of the combustion gases from 610 to 520°F, but this was still inadequate. As expected, this device reduced noise levels of the engineering model from 95 dBA and 102-1/2 dB lin to 92 and 97, respectively.

2.2.6 Component Parameters Selected for First Protytype. The results of these preliminary tests with the engineering models were used to select the component dimensions and configuration for the design of the first prototype. The spherical combustion chamber with a volume of 524 in.^{3} and a 2145-in.^{3} spherical exhaust decoupler seemed to be optimum when connected by a 2-in.-diam. resonator tube, 54-in. long. A 3-in. diam. neck, 7 in. long, was used with a gas distributor head 1.90 in. in diameter. The distributor head had 16 ports for a total orifice area of 0.14 in.^{2}. The gas decoupler volume was not considered to be critical as long as it was as close as possible to the gas flapper valve and had a volume of at least 141 in.^{3}.

3. THE FIRST PROTOTYPE

Several designs for the first prototype, Proto I, were drawn up. The original design involved having the combustion chamber just above the exhaust decoupler with the penetrations in the side of the tank. The configuration was considered to pose severe manufacturing problems. After several iterations, a design was selected which packaged the components in an efficient producible fashion.

3.1 Proto I Design and Construction

The design adopted is given in Figure 3 and a photograph of the combustor is shown in Figure 4. The main tank penetrations are from the top and the bottom "heads". This allowed the tank diameter to be only 18 in. for the instantaneous version. The air and gas entered from the top through decouplers and flapper valves (not shown) and the exhaust gas exited through the bottom.

There was adequate space between the floor and legs for a secondary heat exchanger to bring the steady state efficiency to above 90%. The spuds on the side were for temperature measuring instrumentation and the hand holes in the tank were for manufacturing convenience.

The drawing shows the dimensions for the instantaneous heater. A storage heater would have the same configuration but have a larger diameter tank. Consequently, the same inner components could be used in both versions.

The burner portion is composed of the neck, combustion chamber, resonance tube, exhaust decoupler, and exhaust pipe. It was desired that the resonator be constructed by bending a single section of seamless tubing. But because cost estimates from vendors were extremely high, the resonator was constructed by welding a series of elbows and straight sections to the two spheres. The burner was assembled by a vendor and was installed into the instantaneous-type tank. Both the tank and the combustor were glassed. To expedite testing for the unit, the top of the tank was left open so that modifications of the neck and flapper valve assembly could be made more easily.

3.2 Tests of Proto I

3.2.1 Gas Input Rate. A serious deficiency was observed when the unit was tested. After much thorough testing and scrutiny, the maximum input rate achievable with satisfactory combustion was 176 kBtu/h.

The individual components had all been proven on the experimental model except for the spiraled resonance tube. The combustor was disassembled and it was found that the i.d. of the resonance tube was 1.965 in. instead of 2.067 in., as ordered from the vendor. This had reduced the cross-sectional area by 9.6 percent corresponding to the reduced rate. A 2-inch section was added to the resonance tube to modify one sharp bend, but there was no improvement.

3.2.2 Exhaust Gas Temperatures. No devices to lower exhaust gas temperatures were constructed on the first prototype as that task was contemplated as a separate undertaking. However, Proto I did exhaust its gases out of the lower end of the tank where the water temperatures were always below 120°F. Consequently, its exhaust temperature never exceeded 480°F, even at rates of 200 kBtu/h (where CO was excessive). This was already a significant improvement over the engineering model which had exhaust temperatures up to 610°F.

3.2.3 Stratification Studies. Before designing Proto II, stratification studies were conducted on Proto I to determine what stratification of water temperatures resulted from using the burner in its present orientation, where gases enter at the top and exhaust at the bottom of the tank. Proto I was instrumented with 7 thermocouples spaced vertically along the tank about 6-1/4 in. apart. The tank was completely insulated to duplicate the convection conditions of the finished model. Several tests showed the stratification to be quite skewed, as seen in Figure 5.

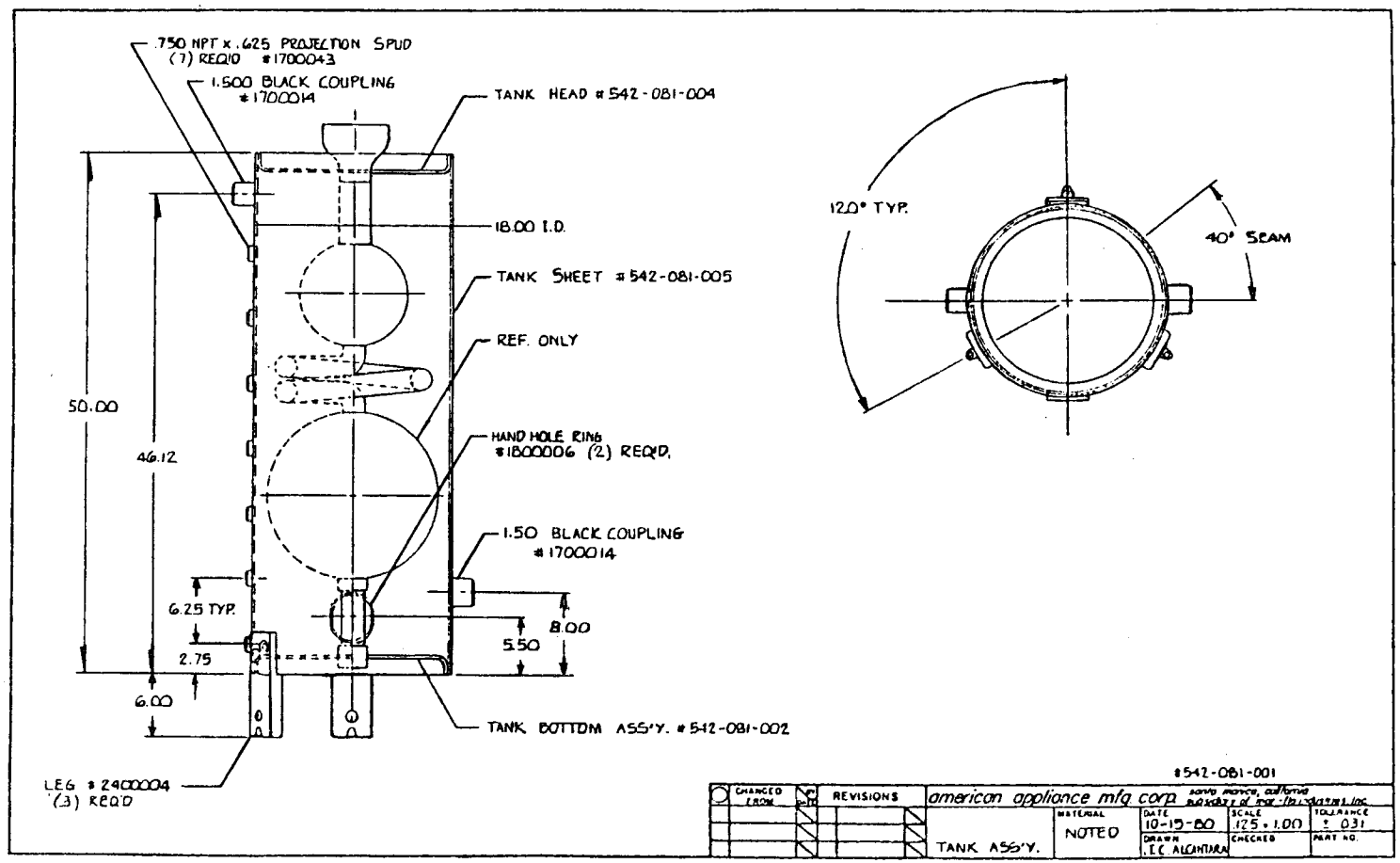

Figure 3. Assembly Drawing of First Prototype Pulse-Combustion Water Heater

Figure 4. First Prototype Burner Assembly

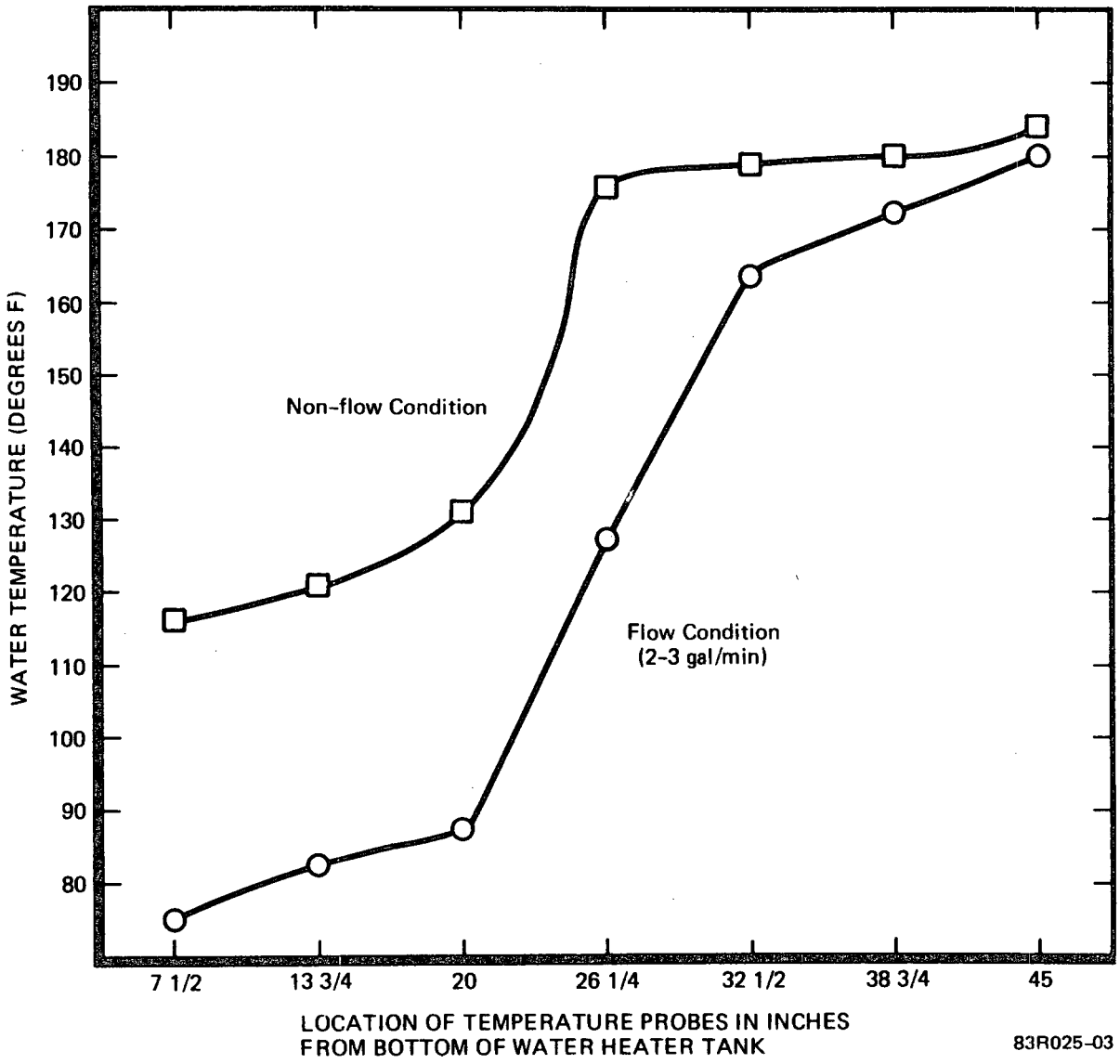

Figure 5. Stratification of water temperatures in Instantaneous Heater Tank using Proto I burner

3.3 Conclusions on Proto I

It was felt that replacing the resonance tube with one having a larger diameter would restore the gas input rate, but there were manufacturing problems with spiraling a large tube. Also, the high combustion gas exhaust temperature would still require multiple fins which would add to manufacturing costs. Consequently, it was decided to redesign and construct another prototype combustor (Proto II), which was easier to manufacture and added heat exchange surface area in a simpler way.

The advantages expected of the gas flowing downward were (1) the maximum efficiency by placing the exhaust decoupler in the colder water (greater Δt for the exhaust decoupler) to cool the gases before they enter the preheater, and (2) any condensate formed in the burner will flow down away from the flapper valve area. However, it is possible an auxiliary circulating pump might be required for the storage unit.

4. THE SECOND PROTOTYPE

The first prototype had all of the same components of the best engineering model except for the coiling of the resonator tube. This size tubing was considered difficult to bend smoothly, but one-inch i.d. tubes were easily coiled with conventional equipment. Four one-inch tubes have about the same cross-sectional area as the 2 inch tube. Therefore, a design for the second prototype combustor was developed using a four-tube resonator. As shown in Figures 6 and 7, they were each spiraled 450° (1-1/4 turns, using a plumber's hickey) which resulted in a 15-1/2 in. average diameter for the purpose of fitting compactly within the walls of the 18 in. diam. tank and between the combustion chamber and the exhaust decoupler to which their ends were each attached. To fit in a parallel fashion between these two spherical chambers, they were rotated 90° apart from each other, in such a way to attach them at four different locations on each sphere. Their ends were intended to be welded tangentially to the spheres, but were fabricated by the shop to enter at about a 45° angle, half way between a tangential and radial direction. This resulted in an 8 in. increase in the distance between the spheres and thus an 8 in. longer unit. As a result, the unit was not completely submerged when it was tested in the instantaneous water tank. For most tests, 2 to 4 in. of the upstream portion of the neck was dry.

Because of their equal length and parallel construction, the four tubes acted as one resonance tube. Their total cross-sectional area was 3.51 in.^{2}. This was intended to be reasonably close to the equivalent cross-sectional area of the single 2 in. (nominal pipe i.d.) resonance tube used on the engineering model which was 3.36 in.^{2}. The larger cross-sectional area assured adequate operating input rates, and also compensated for the increased surface flow resistance.

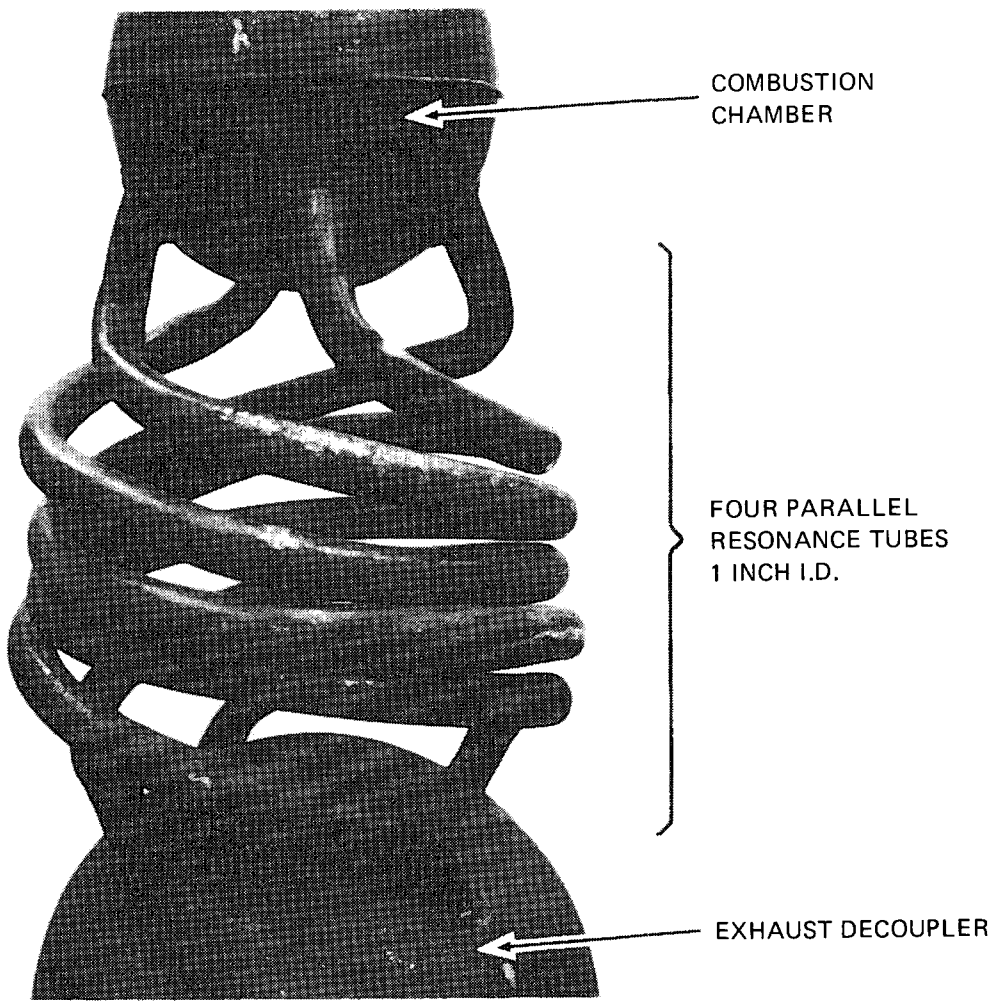

Note: The disc sections used to construct the combustion chamber and exhaust decoupler were spun steel. The resonance tubes were welded steel tubing.

83R025-08

Figure 6. Detail of Pulse Combustor

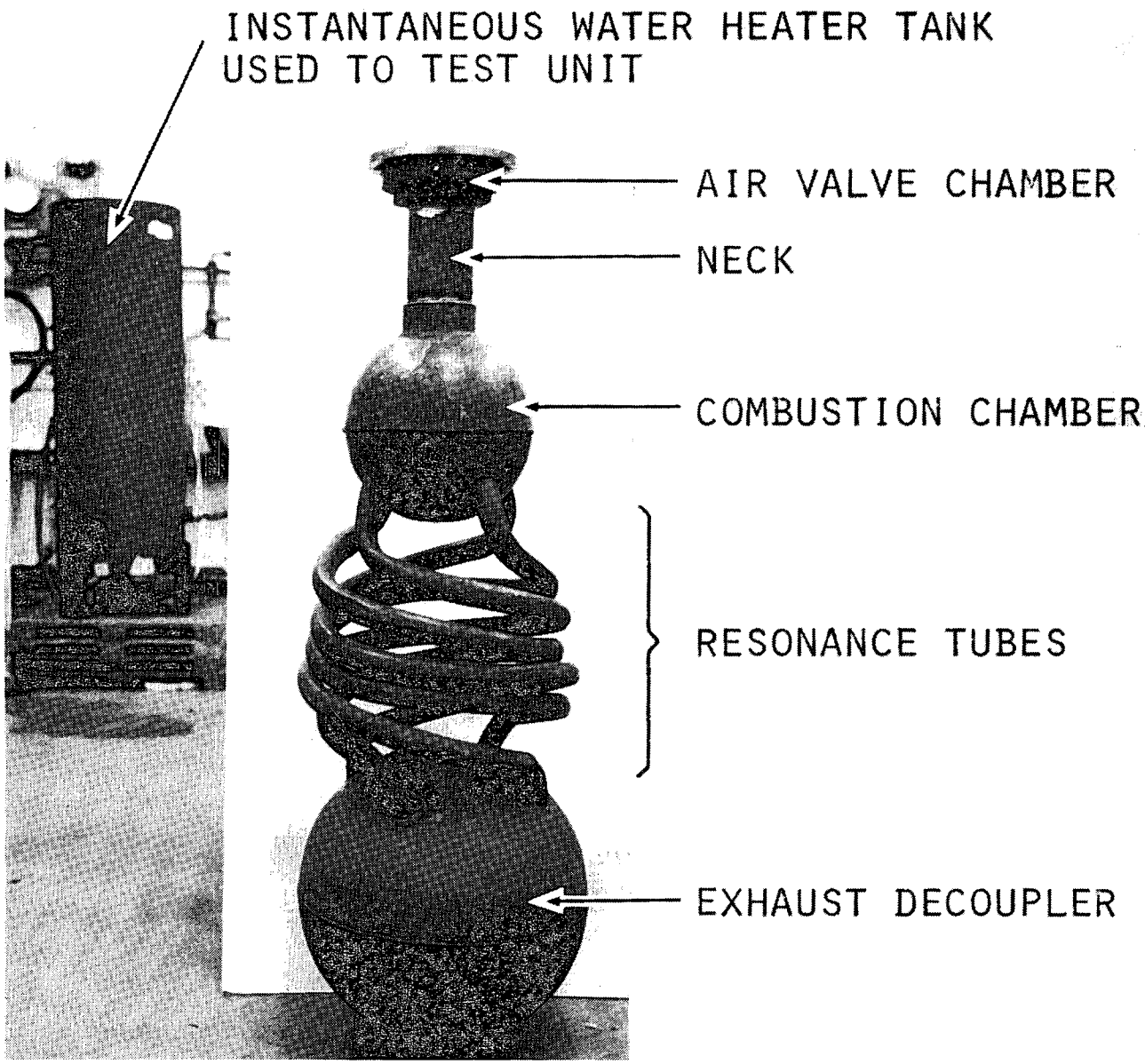

Figure 7. Commercial Water Heater - Pulse Combustion Burner

The other important advantage of this design was improved heat transfer. The four 1-in. diam., 66-in. long tubes increased the heat transfer area, relative to the single 2-in. diam., 61 in. long tube by about 565 in.^{2} to 1020 in.^{2}. This compares with 800 in.^{2} of heating exchange surface on the exhaust decoupler and 310 in.^{2} of surface on the combustion chamber. However, scrubbing action in the resonator makes it about three times more effective per unit area than the exhaust decoupler as a heat exchanger.

4.1 Combustion Test Results

This prototype was made more compact at the air flapper valve housing chamber by using a bushing rather than a bell reducer, and thereby shortened the combustor by 3 in. In order to use a bushing, the location of the distributor head had to be changed with respect to the air valve main plate to which it attaches. Generally, pulse combustion units have run best when the distributor head is located within a couple of inches of the upstream end of the neck. But tests with the bushing on the Proto II combustor resulted in marginally poor CO levels with the distributor head at that end of the neck. As the distributor head was tested in positions further downstream, the gas input rate would tend to drop. But using the 7 in. neck, one position about 5 in. downstream worked well at 197 kBtu/h with 9.4% CO^2 and 0.009% CO where the 1.95 in. diam. distributor head gave the best results.

4.2 Heat Transfer Improvements

The increased heat exchange surface improved heat transfer and efficiency when used in the instantaneous tank, with the combustion chamber on top and the exhaust through the bottom. At 199 kBtu/h the "flue" temperatures were 120 to 130°F depending on the temperature of the heated water. This contrasted with flue temperatures in the engineering model in excess of 500°F, when tested in the large experimental tank with both the combustion chamber and the exhaust decoupler exit near the top. Thus this design precluded any need to use fins or special heat transfer devices as previously considered. For the instantaneous model, this design assured the achievement of exceeding the thermal efficiency goal of 85% without the need of a secondary heat exchanger.

4.3 Initial Sound Data

The SPL were measured while the unit ran at 200 kBtu/h. With no insulation the SPL was 96 dBA. With a 3/4-in. fiberglass lining, aluminum clad, positioned inside the air decoupler, the SPL was 91 dBA. Thus this minimum amount of sound insulation dropped the SPL by 5 dBA. However, more insulation was obviously required.

4.4 Stampable Valves

The adjustable gas and air flapper valves were designed originally for the engineering model. The design was intended for rapid and easy adjustment of the valves to facilitate research progress. Each part was machined. This

would be prohibitively expensive for a mass-produced unit. Concurrent with the effort on Proto I, a less expensive valve was studied.

The valve designs were modified to utilize stamping techniques. The plates were thinner to permit stamping the parts. The adjustable feature was eliminated for simplification. The valves were assembled with machine screws and simple spacers. A staggered arrangement of the ports was designed so that the stamping process would not damage the plate.

This stampable valve proved to be unsatisfactory since good combustion could not be achieved at any reasonable input rate. The tolerances for the spacers were too critical. A difference of only 2 mils made a significant difference in input rate. Also, the staggered hole arrangement gave erratic results. Therefore, another design that could be stamped was fabricated.

The second set of stampable air and gas flapper valves were of a simpler design and similar to the original adjustable valves. The ports were not staggered as on the first stampable valves. They were also designed on a smaller diameter in order that a smaller air valve chamber could be used, i.e., a 3 x 5 in. bushing rather than a 3 x 6. For expediency of the schedule, it was necessary to also make these valves adjustable.

Once these valves were fabricated and assembled, they were tested on the engineering model using a pipe bushing as a more compact air valve chamber. The unit operated at 201 kBtu/h with 9.6% CO_2 and 0.005% CO, and at 227 kBtu/h and with 10.6 CO_2 and 0.024% CO (Run 199). The air and gas openings were 1.64 and 0.0719 in.^{2}, respectively. Thus it was considered a satisfactory component and comparable in effectiveness to the original adjustable flapper valves, and could be used in the prototype without complication. All valve materials were made of steel except the flappers which were teflon.

4.5 The Instantaneous Model

It was originally planned to construct both a storage and an instantaneous water heater, with the first Proto II combustor to go into a storage-type tank and a second combustor into an instantaneous tank. The major difference between the two would be the diameter of the tank. The same designs for the combustor and air and gas decouplers would be used. However, problems were encountered in the construction of the storage-type unit; and the air valve chamber, in which the concentric valves were attached to the combustor, was ruined. Time, budgeting, and product considerations limited the development then to only one unit. The stratification in the instantaneous model was advantageous and, since its development was further along, the latter option was taken.

4.5.1 Construction of the Instantaneous Model. A completely new version of Proto II was constructed, beginning with the machining of a new air valve chamber from cold-rolled steel and having inside dimensions closely approximating those of the previous chamber made from a cast iron bushing. The material was changed to facilitate its welding to the steel tank.

The resonance tubes, made of cold-rolled, electric-welded steel (1-1/4 in. o.d. and 18 ga.) were coiled by a local vendor. The coils were cut to length by Shock Hydrodynamics and fitted with elbows made from the same kind of tubing.

All of the parts of the pulse combustor, including the combustion chamber and the exhaust decoupler, were then assembled and welded by the vendor. The completed pulse combustor was then inserted into the instantaneous-sized tank previously used to test Proto I. The tank's flat heads were replaced with dished heads with both heads dished into the water side (negative heads). The combustor was then permanently welded inside the tank as an hermetically sealed unit. The unit was tested at 60 psi of air, adequate for subsequent standard water heater testing.

The air decoupler was then added as an extension of the walls of the 18 in. diameter tank. Mounted inside the air decoupler were the acoustic insulaion, the starting blower, and gas decoupler as illustrated in Figure 8. This configuration allowed for adjusting screws for the air and gas flapper valves to be extended through holes in the lid of the air decoupler. The purpose of this was to efficiently arrive at the air and gas input openings that would effect the desired input rate and combustion performance, given the changes presented by the new unit.

4.5.2 Resultant Dimensional Modifications

4.5.2.1 The Resonance Tubes. In the process of coiling the resonance tubing, its diameter was lessened from 1.25 to 1.23 in. avg. o.d. and from 1.148 to 1.135 ($\pm$0.003) in. avg. i.d. This changed the total cross-sectional area of the four resonance tubes from 4.14 in.^{2} to 4.05 $\pm$0.02 in.^{2}. This is 15% greater than the 3.51 in.^{2} for four tubes of the first Proto II combustor and 25.5% greater than the 3.36 in.^{2} for the single tube of the engineering model, the two units which successfully attained 200 kBtu/h. This extra cross-sectional area for the new Proto II was expected to increase slightly the upper limit of the unit's input capacity and lower slightly the CO_2 level at 199 kBtu/h as more excess air was expected from the larger resonance tubes.

4.5.2.2 The New Air Valve Chamber and the Neck. All previous units used the same 3 x 6 in. pipe bushing for the valve chamber. Its depth was only 1-1/16 in. This was acceptable but on the short side for 200 kBtu/h in proportion to those used in previous pulse combustion projects of this kind. Thus, when the new steel air valve chamber was machined, this dimension was increased to 1.43 in. The 5.6 in. i.d. of the new chamber compares with 5.75 in. on the cast iron bushing. The air valve was designed for an i.d. as small as 4.8 in.

The neck length was increased slightly from 7.0 in. to 7.2 in. Its connection to the air valve chamber was changed from a threaded fit to a tight fit (welded on the outside). Changing geometry here is considered within tolerances. But the geometry of the downstream end of the neck was left

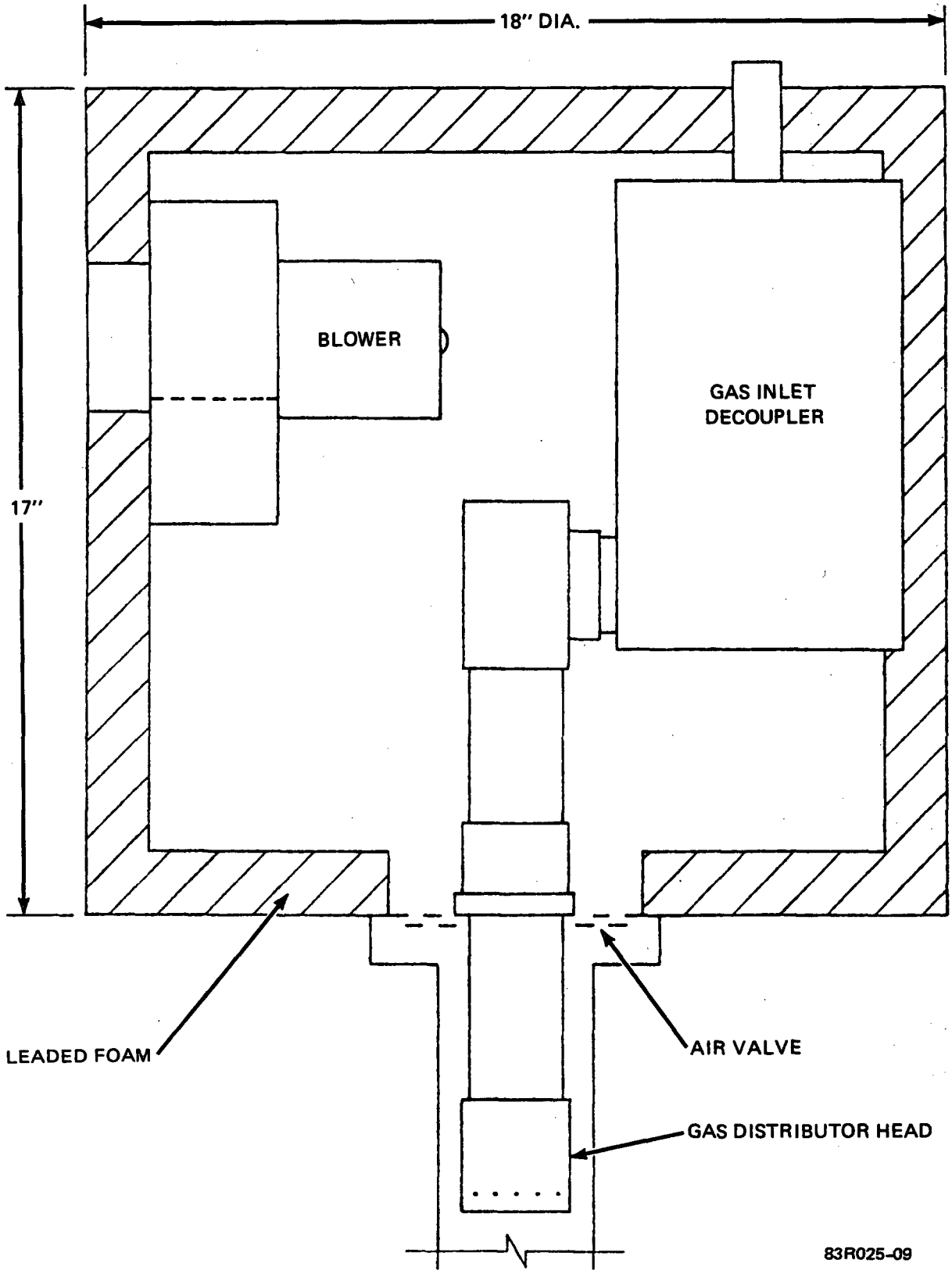

Figure 8. Proto II Air Decoupler With Gas Decoupler

unchanged to prevent the kind of complications experienced in this location both on Proto I and in the Brookhaven furnace project[a], where input rates were reduced and combustion efficiency was adversely affected. Thus the neck was screwed into a coupling which was welded to the combustion chamber. To seal the unit the neck was also welded to the coupling on its exterior.

4.5.2.3 The Air Decoupler. All previous models used the same air decoupler measuring 12 in. diam. by 12 in. long having a volume of 1360 in.^{3}. For the purposes of enclosing the gas decoupler and the starting blower, the volume of the new air decoupler was 2300 in.^{3}, excluding the volume of the acoustic insulation, blower, gas decoupler, and piping. This 69% larger volume was to help lower the noise emissions.

4.5.2.4 The Gas Decoupler. The gas decoupler was designed to be offset from the flapper valves to accommodate their external adjustment. It has an i.d. of 6 in. and a length of 11 in. giving a volume of about 311 in.^{3}. This volume is more than adequate for attenuating any pressure oscillations in the gas flow as was demonstrated with smaller decouplers with the engineering model.

4.5.3 Electrical Controls. A set of electrical controls were designed to operate automatically to cycle the unit based on heating requirements. These controls were designed to operate the prototype water heater as follows:

> A call for heat connects the 120 volt power source (via thermostat) to two timers. The first timer holds the ignitor and the first stage of the gas valve in the "off" positions for 15 seconds. The second timer holds the starting blower on and holds the second stage of the gas valve "off" for 30 seconds. The first fifteen seconds of the blower's operation purges the combustor of any unsafe gas mixtures. After the first 15 sec. the first timer opens the first stage of the gas valve and activates the spark ignitor with the starting blower remaining on 15 seconds longer. The unit is now in starting condition. When the unit starts, the flame sensor shuts down the ignitor and the first stage operates the unit for the remainder of the starting blower's "on" time. When the second timer switches off the starting blower after 30 seconds, it also switches "on" the second stage of the gas valve; whence the unit operates at the full gas input rate.

If the unit does not light within 11 sec. after the spark is activated, the spark ignitor and gas valve shut down and lock out for about a minute, after which time the thermostat must be manually operated to reattempt ignition.

---

[a] Lawton, E. A., L. J. Irwin, and A. Lawler. Development and Demonstration of a High-Efficiency Gas Furnace, prepared for Brookhaven National Laboratories by Shock Hydrodynamics Div., Whittaker Corp., BNL51498, April 1981.

A schematic of the control system is given in Figure 9. A graphical representation of the timing sequences is illustrated in Figure 10. It should be mentioned that the above design represents a situation where a two-stage ignitor is required. A single-stage gas valve does not require the electrical components contained in the dashed portion of Figure 9.

4.5.4 Performance of the Instantaneous Water Heater. The assembled water heater was tested using the components as described, but the input rate was limited to 180,000 Btu/h with good combustion. This was ascribed to the effect of the larger diameter resonance tubes. Consequently, the gas inlet ports were enlarged and the gap between the distributor head and the neck was increased by using a distributor head with a diameter of 1.90 in. instead of 1.95 in. This brought the input rate up and gave consistently good combustion. Typically, a rate of 200 kBtu/h with CO_2 = 9.5%, CO = 0.008% at a P_g of 4 in. w.c. was achieved.

4.5.4.1 Performance vs. Water Temperature. The results obtained on Proto II were with the heated water flowing fully, such that the water temperature rarely exceeded 100°F. It was noticed on occasion that when the water was not flowing the CO concentration in the exhaust rose sharply to unacceptable levels from previously very low values and at otherwise no change in conditions. Thus performance tests were conducted to see what effects different heated water temperatures would have. As the water was heated from 100 to 180°F in the nonflow condition, the input rate would decline 5 to 8 kBtu/h and the CO concentration would increase to beyond 0.04%, air free.

After various tests the cause was ascribed to the thermal effect of warming the input air in the air decoupler prior to entering the air valve. Air and gas valve adjustments were found that allowed good combustion to be achieved with water temperatures as high as 180°F, but with a 3% reduction in input rate, as shown in Table 5.

4.5.4.2 Thermal Efficiency. The controls described previously were then installed and the unit operated well. With the water flowing, it operated at an input rate of 195 kBtu/h, with exhaust emissions of 10.0% CO_2 and .012% CO, and at a gas line pressure of 3.5 in. w.c. The exhaust temperatures of 126°F gave calculated flue losses of only 8.5% for a thermal efficiency of 91.5%. However, installing plastic ducting at the inlet and outlet reduced the maximum gas input rate to 186 kBtu/h. The thermal effect manifested itself under nondraw conditions. Examples are given in Table 5 for draw and nondraw conditions. As soon as the flow was restarted, the unit reverted to the higher input rate.

4.5.4.3 Sound Pressure Levels. Sound pressure levels were measured with a Quest Electronics sound level meter. Data are given in Table 6 for operation with and without ducting. Sound pressure levels were in the low to mid-80's dBA. They were lowered about 3 dBA when ducting was applied. This was due mostly to ducting, as the lower rate did not significantly affect the sound level. The sound levels of 85 to 86 dBA without ducting and 82 dBA with ducting were considered to be too loud for most applications. Thus acoustic treatment was used to bring the sound level down by at least 6 dBA.

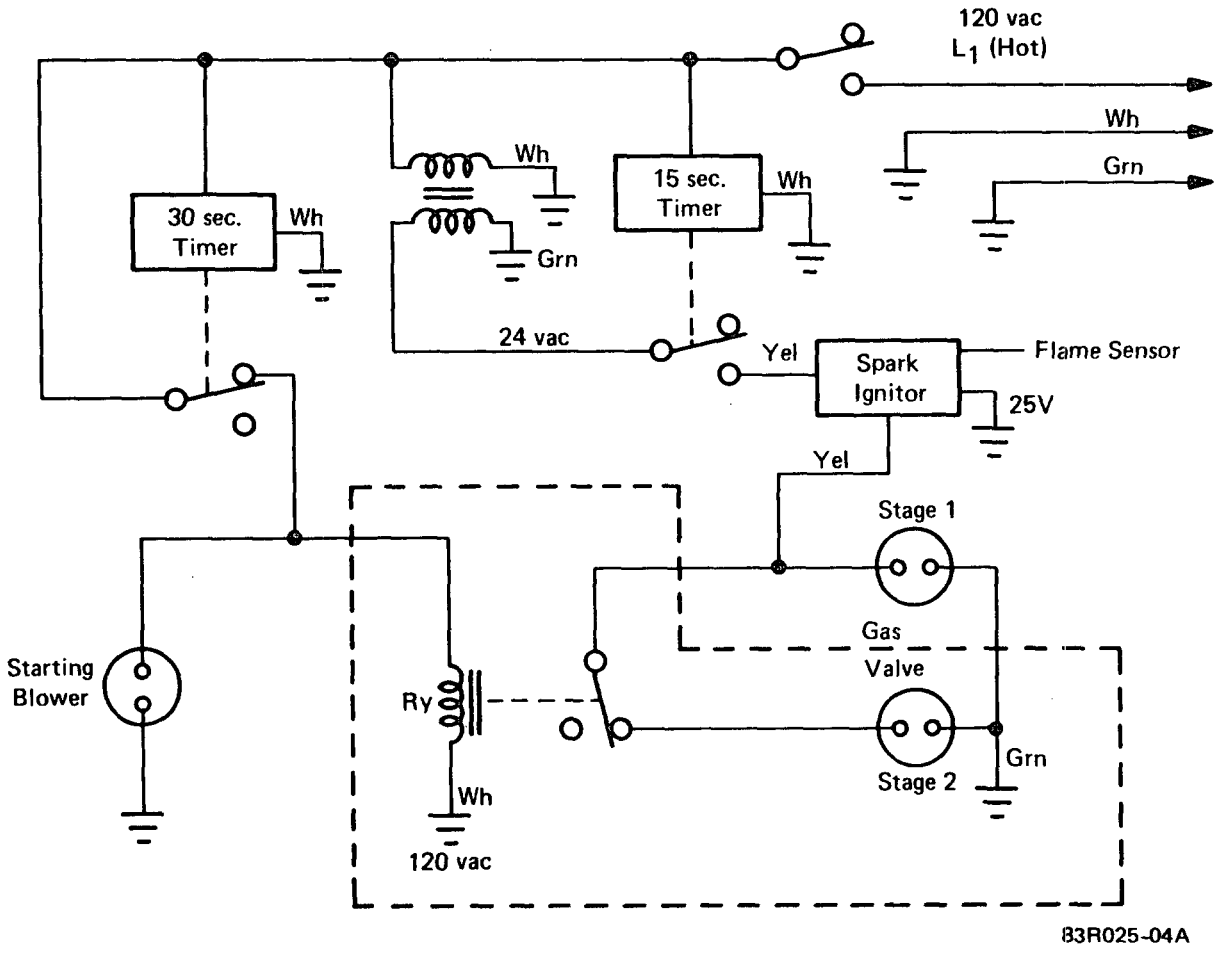

Figure 9. Schematic of Controls for Commercial Pulse Combustion Water Heater

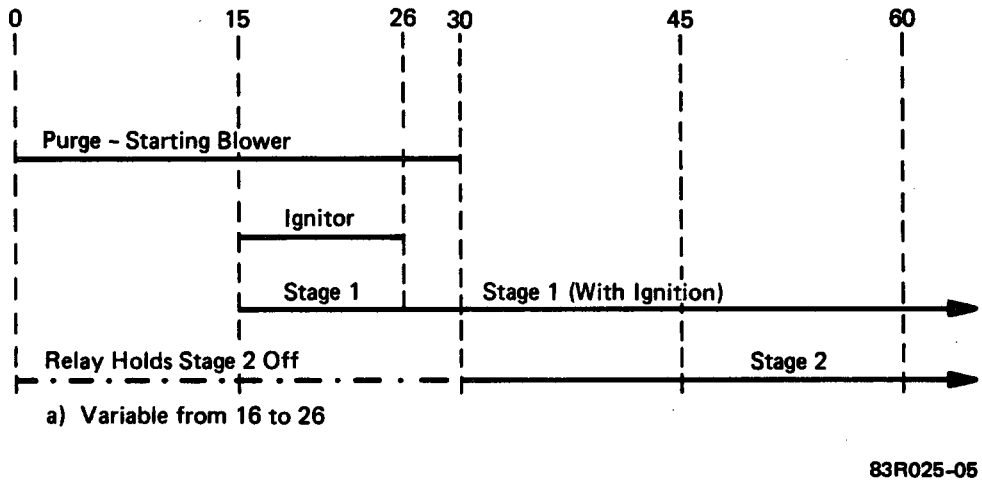

Figure 10. Timing Sequence of Controls in Figure 9.

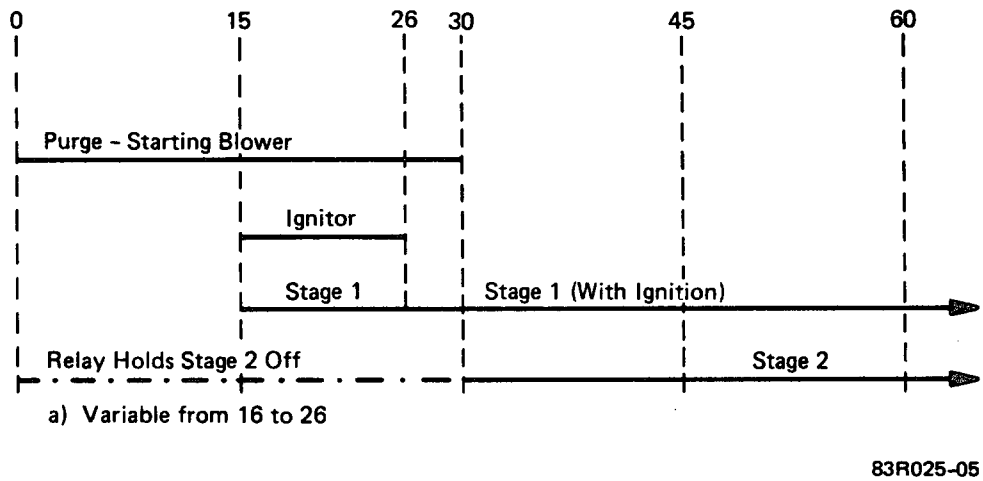

Figure 10. Timing Sequence of Controls in Figure 9.

TABLE 5. PERFORMANCE DATA OF THE PROTOTYPE INSTANTANEOUS WATER HEATER AT VARIOUS WATER TEMPERATURES (RUN 252)

Rate kBtu/h	CO_2 %	CO_2 %	Flue Temp, °F	Water Temp, °F	Efficiency ±0.1%
193	10.2	.013	126	87R[a]	91.8
195	9.9	.009	133	95 -[b]	89.5
189	10.1	.017	135	134 -	89.1
189	10.2	.021	139	171 -	89.0
195	10.2	.014	126	93R	91.6
197	10.2	.016	133	113 -	89.6
189	10.4	.025	136	151 -	89.0
189	10.3	.029	139	175 -	88.9
186[c]	10.0	.010	126	87R	91.5
185	10.3	.013	133	99 -	89.7
182	10.4	.019	136	141 -	89.0
181	10.5	.022	143	169 -	88.8

[a] R indicates water flowing (10-15 gal./min.).

[b] - indicates inlet water closed off.

[c] Unit was operated at lower rates when ducting was applied to air inlet and exhaust.

TABLE 6. SOUND PRESSURE LEVELS OF THE PROTOTYPE INSTANTANEOUS WATER HEATER

Rate (kBtu/h)	Ducting	SPL (dBA)	Loc., 1 Meter From . . .
190	No	85	Inlet of Unit
		86	Outlet of Unit
190	Yes	82	Unit's Inlet
187	Yes	78.5	Inlet of Duct, in Line
		79	Inlet of Duct, at 90°
188	Yes	79	Outlet of Duct, in Line
		77	Outlet of Duct, at 90°
188	Yes	80	Both Inlet and Outlet, in Line
		78	Both Inlet and Outlet, at 90°
Background Noise = 54 to 60 dBA			

4.6 Noise Reduction

To address the major portion of the noise reduction, the prototype was moved to the facilities of Gas Appliance Laboratories, Inc. (G.A.L.). About equal sound intensities emanated from the outlet and the inlet of the water heater. Two separate approaches to noise reduction were taken at each end and then refinements were done externally.

4.6.1 Outlet Noise Reduction. At the outlet an obvious solution was to install a conventional muffler. However, condensation would occur in the muffler since the gases leaving the exhaust decoupler at temperatures of 125 to 130°F would be saturated with water. Water condensing in the muffler would require additional drains, representing a loss of heat. Furthermore, condensing heat exchangers on forced or induced draft units would exhibit higher efficiencies than the 89 to 91% delivered by the pulse combustion unit. A secondary heat exchanger would minimize these prolems and provide an efficiency of 95% or better to make the unit more competitive. Since the exhaust gases in this configuration were already down below 140°F and numerous plastic coatings were available to avoid corrosion problems, a secondary heat exchanger offered advantages, despite its somewhat higher cost relative to a simple muffler.

4.6.1.1 Design of Muffler/Secondary Heat Exchanger. A muffling device was designed which would also function as a SHE. It consisted of two rows of finned tubes (14 in all) manifolded at both ends. This constituted a single pass configuration, allowing the exhaust gases to pass into one manifold, disperse through the 14 tubes, and be manifolded at the other end before exiting the unit. Figure 11 shows a photograph of the SHE.

The 14 tubes were 5/8 in o.d., and had a theoretical total cross-sectional area of 3.4 in.^{2}. The manifolds were both 2-1/2 in. i.d. copper tubes with cross-sectional areas of 4.9 in.^{2}. The aluminum fins and the manifolds were coated with an acrylic resin in an enamel base to protect it from the surrounding water. The SHE was designed to fit under the main water tank which was supported six inches above the floor by its three legs.

4.6.1.2 Baseline Tests at the New Laboratory. The water heater was set up without its jacket, thermal insulation, or automatic controls at its new location at G.A.L. The unit was operated to test its continued performance and to re-establish its baseline data. Changes were found in its input rate capacity and in its general operability. This was corrected with the fabrication of a thicker main plate (0.164 in. or 8 ga.) for the air valve. This offered a more rigid support for the gas line and gas decoupler. These heavier parts were supported in an offset position above the air valve to accommodate flapper valve adjusting rods, which continued to be used in the unit's development. However the air valve main plate also supported the gas distributor head below it. When the plate was flexed by the weight above it, it tilted the distributor head so that it was too close to the wall of the neck. This affected combustion adversely, since the distributor head dimensions and position were critical. The thinner plate (0.070 in. or 14 ga.) had been used to more closely simulate production conditions.

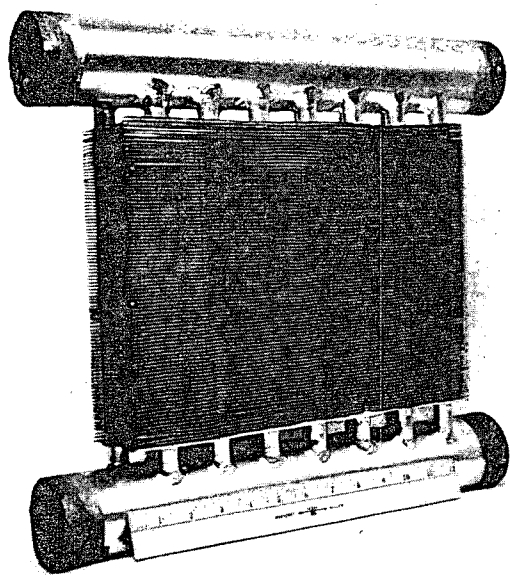

Figure 11. Secondary Heat Exchanger for Prototype Pulse-Combustion Commercial Water Heater

With this correction made, the unit operated at 190 kBtu/h, with a P_g = 2.9 in. w.c., P_m = 21.5 in. w.c., 9.7% CO_2 and 0.01% CO. Noise levels of 83.5 dBA were recorded at 39 in. from both the inlet and the outlet, which were now more nearly directed toward the same side of the unit, i.e., 30° apart on the cylindrical shape versus the 80° of previous setups. Neither opening was ducted.

Sound level measurements were generally taken about 5 feet off the concrete floor. Background noise was in the lower 50s dBA; with water flowing through the tank, it was in the mid-to-upper 60s dBA.

4.6.1.3 Results of Preliminary Test on Muffler/SHE. The SHE was attached to the outlet of the water heater in such a way that the SHE was simply lying on the floor outside the unit on its periphery. To effect a single pass of the exhaust through the SHE, it was modified by closing off one end of each header at opposite corners of the SHE.

The unit was operated at the same gas and air settings used in obtaining the baseline data. The use of the SHE lowered the gas input by about 2% to 186 kBtu/h. However, its effect on noise attenuation was significant. Two measures were made on its effect. The first was at a distance of 39 in. from both the water heater and the outlet of the SHE. These results are given in Table 7, which compares the octave analyses of the unit operating both with and without the SHE. This shows a 3.5 dBA attenuation by the SHE in the overall SPL. Figure 12 illustrates the locations of the SLM with respect to the unit.

The second measure was made directly at the exhaust outlet. Without the SHE this was at the exhaust decoupler outlet pipe. With the SHE the measurement was taken at the SHE outlet. The difference was a 10 dBA attenuation by the SHE, from 104-1/2 dBA to 94-1/2 dBA.

Since results indicated that the muffler/SHE was effective in attenuating the sound emanating from the exhaust, it was incorporated into the water heater.

4.6.1.4 Installation of SHE. The SHE was attached to the water heater at the bottom end of the tank. It was connected to the exhaust outlet with copper tube fittings which were 2-1/2 in. diam. Figure 13 is a photograph showing the copper fittings assembled on the SHE. The assembly was electrobrazed and tested to be airtight. A production version would be constructed of steel with a polymeric coating to contain the corrosion. The low temperature (less than 140°F) of the gas entering the SHE makes the use of many commercially available coatings feasible. However, the vendor who fabricated the heat exchanger was not set up to make a steel heat exchanger so a copper unit with aluminum fins was used. The SHE was coated with a clear acrylate polymer which should be stable to an environment up to at least 250°F.

TABLE 7. OCTAVE ANALYSES OF COMMERCIAL PULSE-COMBUSTION WATER HEATER
With and without use of SHE, measured 39 in. from unit and its outlet.

SHE	P_g in. w.c.	Rate kBtu/h	Loc. *	Overall SPL			dB-linear Per Band-Center-Frequency (Hz)								
				dBA	dBC	dB-lin	31.5	63	125	250	500	K	2K	4K	8K
	Background noise w/water flowing		L	67	66.5	68	54	54	58	58	52	57	61	62	59
NO	2.8	189	L	83	90.5	91.5	83	89.5	83	83	80	76	78	68.5	62
	2.7	189	R	83.5	90	91	81	88	83.5	83	82.5	75.5	78	69.5	63.5
YES	2.5	187	L'	80	87	88	80	85.5	82.5	78	78.5	75	71	66	61
			L	79.5	87	88									
	2.5	186	R'	79.5	88.5	88.5	83	88	81.5	78	79	74	71	67	63
			R	80	89	90									

* See Figure 12.

83R025
Task 2.2

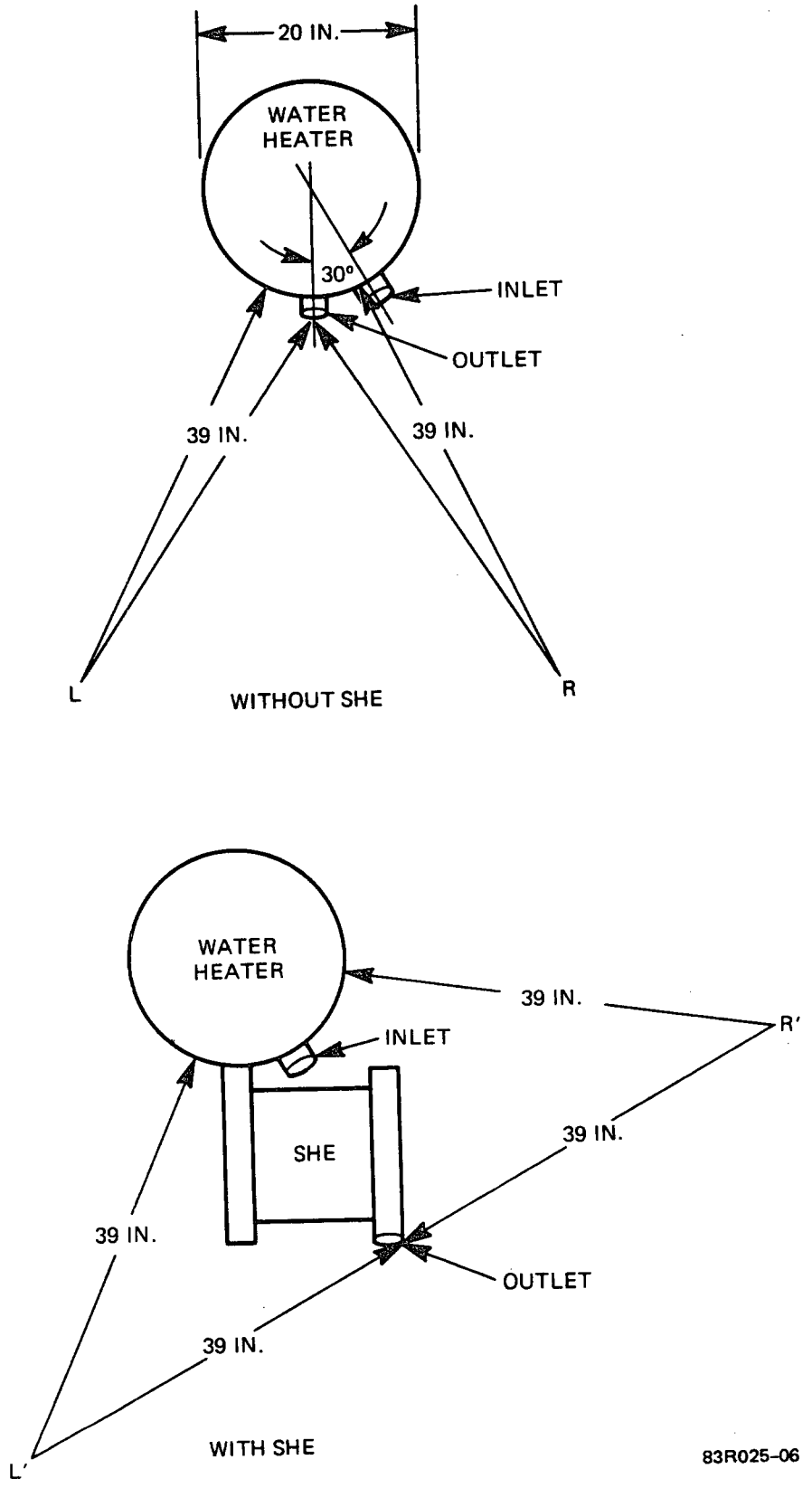

Figure 12. Top view of Commercial Pulse-Combustion Water Heater and Sound Level Meter locations (L,R,L' and R') used for obtaining data in Table 7.

To enclose the assembly, a 12 ga. steel skirt was lap-welded to the tank and extended downward 7.5 in. below the main tank. The tank is 18 in. in diameter. A 3/16 in. thick flat head with a 1 in. side flange was electro-welded inside the bottom of the skirt to complete the enclosure. Openings were provided in the side of the skirt for the exhaust and for the inlet and outlet of the water to be preheated by the SHE. The outlet of this preheater tank was connected to the inlet of the main tank above it. Figure 14 is a photograph of the muffler/SHE enclosure.

The old legs were removed and new legs were added, which raised the water heater only 2 in. off the floor rather than 6 in. as before. The number of legs was changed from three to four for stability, since four resilient mounts (from Barry Controls) were added under the legs for vibration isolation. This raised the unit another 1-1/4 in. off the floor. As such the unit's height was 77 in.

The preheater tank enclosing the SHE was pressure tested for air leaks and none were found. However, when water was passed through the preheater, a small leak was observed in the SHE. The unit operated well even with this small leak giving a rate of 175 kBtu/h with 9.4% CO_2. The overall SPL was 81 dBA. At this rate the thermal efficiency from flue losses was 96.7% indicating that the SHE was quite effective. It is probable that less fins would be required on future versions.

4.6.2 Inlet Noise Reduction. With the effective exhaust muffling installed in the form of the SHE, attention was focused on the attenuation designs inside the air decoupler, which was the main muffling chamber for the noise escaping from the inlet.

4.2.6.1 Acoustic Materials. Several materials were considered for application inside the air decoupler for noise attenuation. Among them were plain metal baffles, perforated metal, and polymeric foam. Considering the need for a free flow of air and that the dominating frequencies to be attenuated were at the low end of the sound spectrum, the use of a perforated metal for dispersion was considered to be too limited. The perforated metal either restricted the air flow or was effective only at higher frequencies which was not the problem. Plain metal baffles were considered too reflective of the sound waves. Foamed or compliant baffles seemed to be the best alternative.

Lead sandwiched in foam, like that already lining the inside surface of the air decoupler, was used. It consisted of a 20 mil layer of lead (1 lb. per ft.^{2}) sandwiched between a 1/4 in. layer of polyurethane foam on one side and a one-inch layer of the same foam on the other.

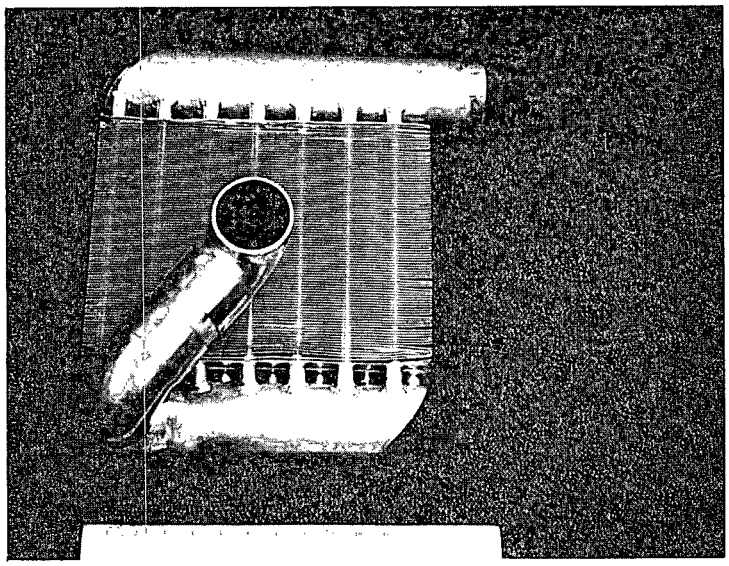

Figure 13. Secondary Heat Exchanger for Commercial Pulse-Combustion Water Heater

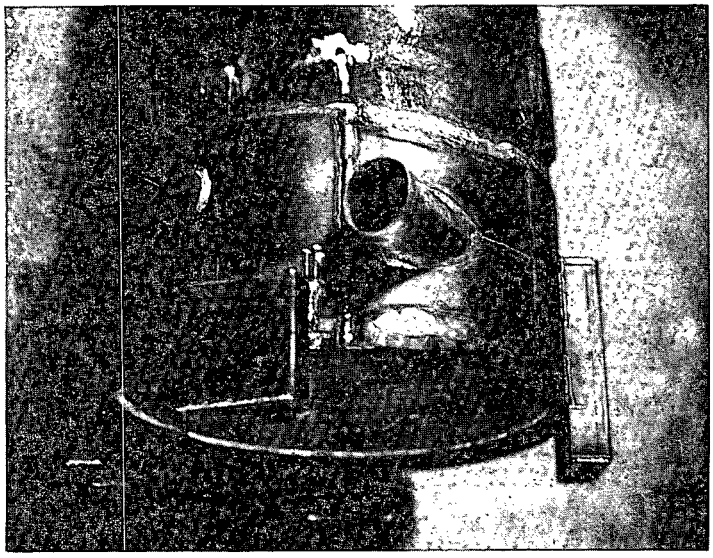

Figure 14. Secondary Heat Exchanger Assembly at the bottom of the Commercial Pulse-Combustion Water Heater

4.6.2.2 Baffling. The leaded foam was used as a spiral wall, curling out asymptotically from the circumference of the air flapper valve to the wall of the air decoupler with a 300° rotation. This partially channeled the exiting noise (and consequently the incoming air) along the wall of the air decoupler. Since the spiral wall was open at the top end, some baffling also occurred in the direction of the lid of the air decoupler, which was also lined with leaded foam. Figure 15 diagrams the curled wall in the air decoupler.

This material was also used to cover the ends of the steel gas decoupler contained within the air decoupler. The outside wall of the cylindrical gas decoupler was covered with simple high density foam.

4.6.3 Additional Treatments. Acoustic treatments external to the water heater are options which were found to be effective. The primary external treatments were the use of ducting, resilient mounts, and a muffler.

4.6.3.1 Ducting. The noise from the 3-inch-diameter opening at the air decoupler inlet and that from the 2-inch-diameter opening at the exhaust outlet were the primary noise emitters. These openings are required to be ducted with 16 ft. of 2-inch-diameter ABS plastic tubing.

During an acoustic analysis of the SPL from different areas of the water heater, it was observed that elbows at the air inlet and the exhaust gas outlet increased the SPL. This is not unusual since turbulent flow with resultant noise is increased by sharp bends. The elbows were replaced by sanitary tees, which are essentially elbows with a straight section tangentially joining one end more like a "y" (Figure 16). The straight section was capped with foam rubber inside to absorb sound which the cap reflected back in the direction of its source.

4.6.3.2 External Muffler.s Two Donaldson mufflers which had 2 inch and 4-inch openings were obtained from G. T. Engineering. These were tested, attached to the outside of the unit, to determine their effectiveness as an added-on option to be incorporated into the ducting.

4.6.4 Acoustic Test Results. Using the noise attenuation devices described above, measurements were observed on the SLM at a distance of 39 in. from the air inlet and the exhaust outlet of the water heater. Results were ± 1 dBA and ± 2 dB-linear. Thus the data are averages, sometimes varying within tests and sometimes between tests. These tests were conducted with no jacket nor any thermal insulation on the water tank or air decoupler, but were designed to demonstrate the effect, or lack thereof, of the treatments described above.

The effect of these attenuators was determined separately and when they were all used together. Their singular usage gave the following results. Ducting on the air inlet and exhaust lowered the overall sound level from 81 to 70-1/2 dBA near the air inlet. The resilient mounts lowered the overall sound level from 81 to 78 dBA.

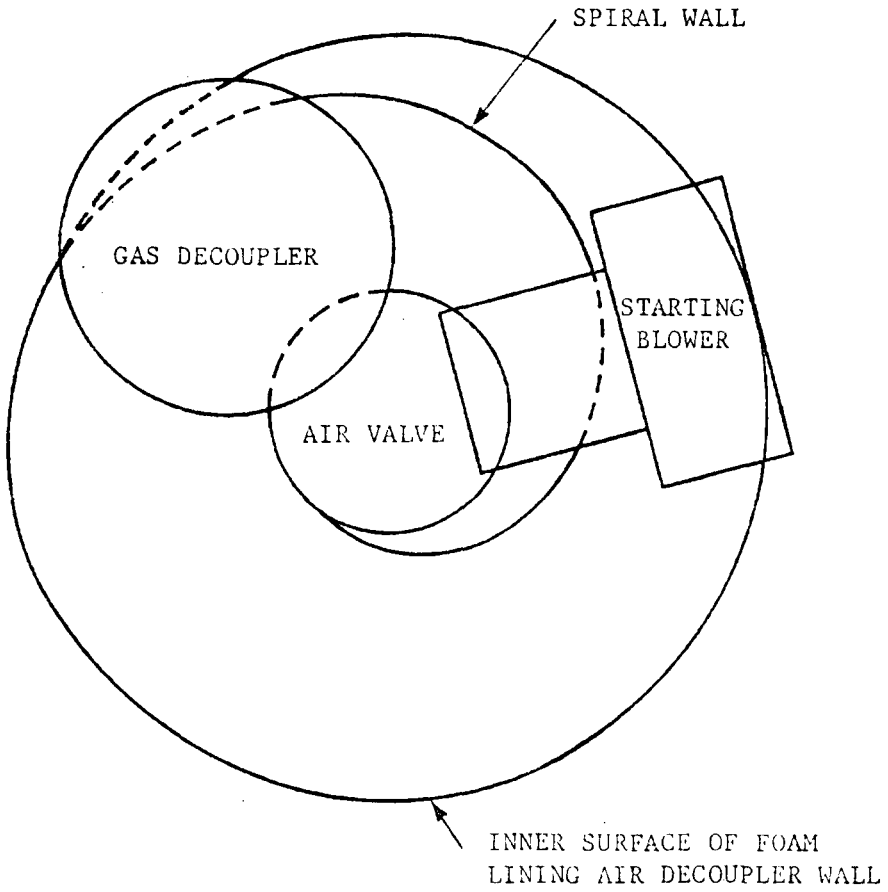

Figure 15. Top view of the inside of the Air Decoupler showing the position of the Baffling Spiral Wall.

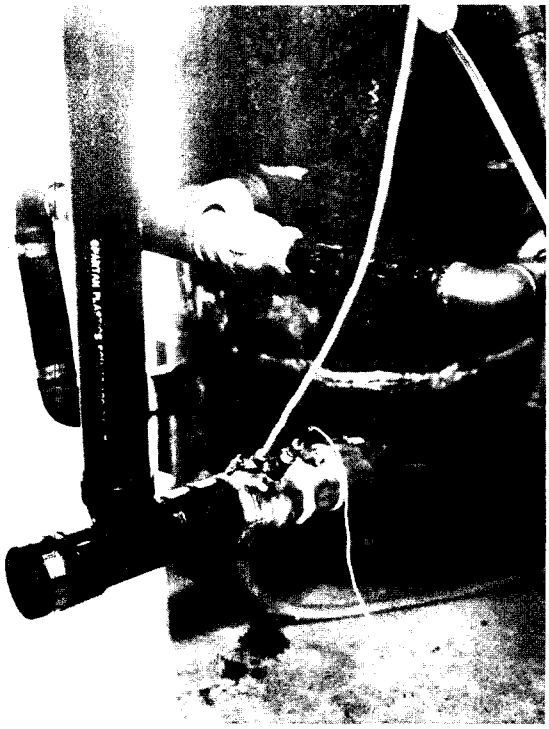

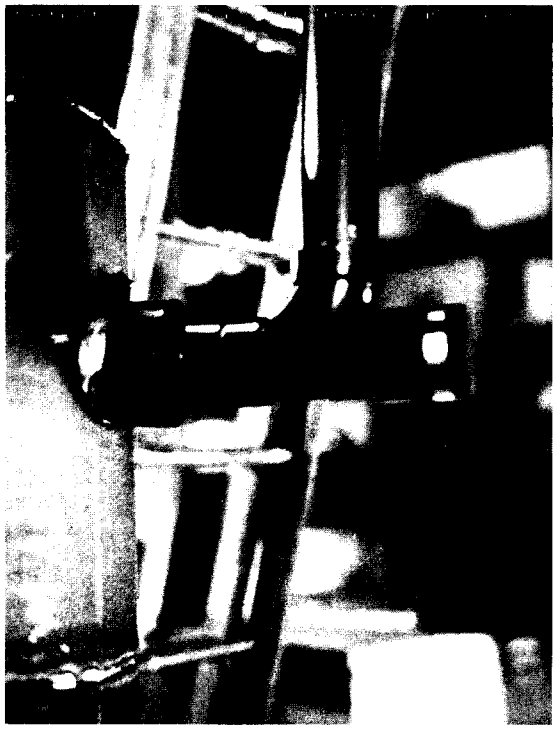

Figure 16. Sanitary Tees on the Ducting to the Air Inlet (Right) and the Exhaust Outlet (Left)

Leaving the resilient mounts on the water heater, the spiral wall was tested and resulted in lowering the overall sound level from 78 to 75 dBA.

The combined uses of the resilient mounts, the spiral wall, and the ducting resulted in attenuating the sound level from 81 to 68-1/2 dBA. This reached the point where the background noise, around 63 dBA, was a factor in the overall noise level. Lowering the background noise to 54 showed that the unit was only emitting 66 dBA.

4.6.4.1 Analysis of Acoustic Attenuators. Further analyses comparing the effects of the spiral walls and the ducting, as given in Tables 8 and 9, show that the frequency bands that significantly contribute to the "sensible" noise (as measured on the A-scale of the SLM) are limited to those having center-bands of 250 Hz to 2 kHz. This is based on the fact that these four frequency bands have SPLs which are lower than the overall SPL by an amount less than 10 dBA. (The A-scale is used in these analyses in order to describe the extent to which any given frequency is sensed by the human ear.) When an insufficient amount of muffling is applied, the 125 Hz center-band frequency becomes a significantly contributing component as it falls within 10 dBA of the overall SPL (in dBA), as was the case in Run 298 of Table 8. These analyses also show that the ducting is by far the best noise attenuator at all frequency bands. The spiral wall decreases all frequencies from 125 Hz on up, but especially at the frequency band where 125 Hz is the center frequency.

4.6.4.2 External Muffler Test Results. The mufflers were tested on the inlet of the unit with the spiral lead-spectum foam removed from the inside of the air decoupler and with no thermal or acoustic insulation on the outside of the tank itself. The results with 16 ft. of ducting at the outlet are given in Table 10. The mufflers dropped the sound level 3-1/2 to 4 dBA, about the same effect as the spiral wall. The 4 in. muffler was slightly more effective at the frequency bands centered at 31.5 and 63 Hz. Overall, however, the analyses showed no significant difference. The 4K and 8K center-band frequency were excluded because they measured mostly background noise.

To test the advantages of an external muffler, in addition to all other measures of acoustical attenuation applied, the 2 in. Donaldson muffler was incorporated into the exhaust ducting, as illustrated in Figure 17. This resulted in lowering the sound level from 66 to 64 dBA.

4.7 Final Configuration

The prototype as developed, is illustrated in Figure 17. The internal arrangement of the major components with the exception of the coiled resonance tubes and the secondary heat exchanger are shown in Figure 18.

4.7.1 Component Description. The final instantaneous prototype measured 20 in. diam. by 79.75 in. high, with a 4 x 6 x 10. electrical control box protruding no more than 5.2 in. from the side of the unit, 58.5 in. from the floor. The lowest 11.6 in. of the unit had a 21.5 in. diam. for the purpose of covering the oversized legs.

TABLE 8. DATA COMPARING THE EFFECTS ON SPL AND OCTAVE ANALYSES (at 39 in. from the units inlet) of: (1) A Short Spiral Wall (S); (2) The Full Height Spiral Wall (fS); (3) 16 ft. of Ducting (D) on each the Air Inlet and Exhaust Outlet; and (4) The Resilient Mounts (r).

Attenuators	Run No.	Rate kBtu/h	Overall SPL		dBA Per Band-Center Frequency (Hz)						
			dBA	dB-1	31-1/2	63	125	250	500	K	2K
Baselines Overall	262	180	81	89							
(Analytic)	259	187	80	88	41	59-1/2	66-1/2	69	75-1/2	75	72
r	276	180	78-1/2	89-1/2							
r,S	298	184	75	88-1/2	40	58-1/2	68-1/2	67	72	68	67
r,fS	300	184	73-1/2	87-1/2	44	59-1/2	63-1/2	66	71	67	67
r,fS,D	301	185	68-1/2	84-1/2	40	57	58-1/2	63	63	60	60

TABLE 9. DATA COMPARING THE EFFECTS ON SPL AND OCTAVE ANALYSES (at 39 in. from the units outlet of: (1) A Short Spiral Wall (S); (2) The Full Height Spiral Wall (fS); (3) 16 ft. of Ducting (D) on each the Air Inlet and Exhaust Outlet; and (4) The Resilient Mounts (r).

Attenuators	Run No.	Rate kBtu/h	Overall SPL		dBA Per Band-Center Frequency (Hz)						
			dBA	dB-1	31-1/2	63	125	250	500	K	2K
Baselines Overall	262	180	80-1/2	93							
(Analytic)	259	186	80	89	44	62	65-1/2	69	76	74	72
r	276	180	77-1/2	94							
r,S	298	184	75	89-1/2	45	61-1/2	64	69	67	69	69
r,fS	300	184	76	92	49	51	61	68	68	70	69
r,fS,D	301	185	68-1/2	79	34-1/2	38-1/2	53	61	62	61	63

TABLE 10. SOUND PRESSURE LEVELS (SPL) AND OCTAVE BAND ANALYSES OF THE COMMERCIAL PULSE-COMBUSTION WATER HEATER AT 39 IN. FROM ITS AIR INLET.

Muffler (in.)	Run No.	Rate kBtu/h	Overall SPL		dBA Per Band-Center Frequency (Hz)						
			dBA	dB-lin.	31-1/2	63	125	250	500	K	2K
4"	290	160	69	81	35	52	51-1/2	61	62	62	65
2"	291	160	68-1/2	82	37	54-1/2	50	60	63	61	63
None	294	163	72-1/2	84	37	54-1/2	63	62-1/2	71	66	62

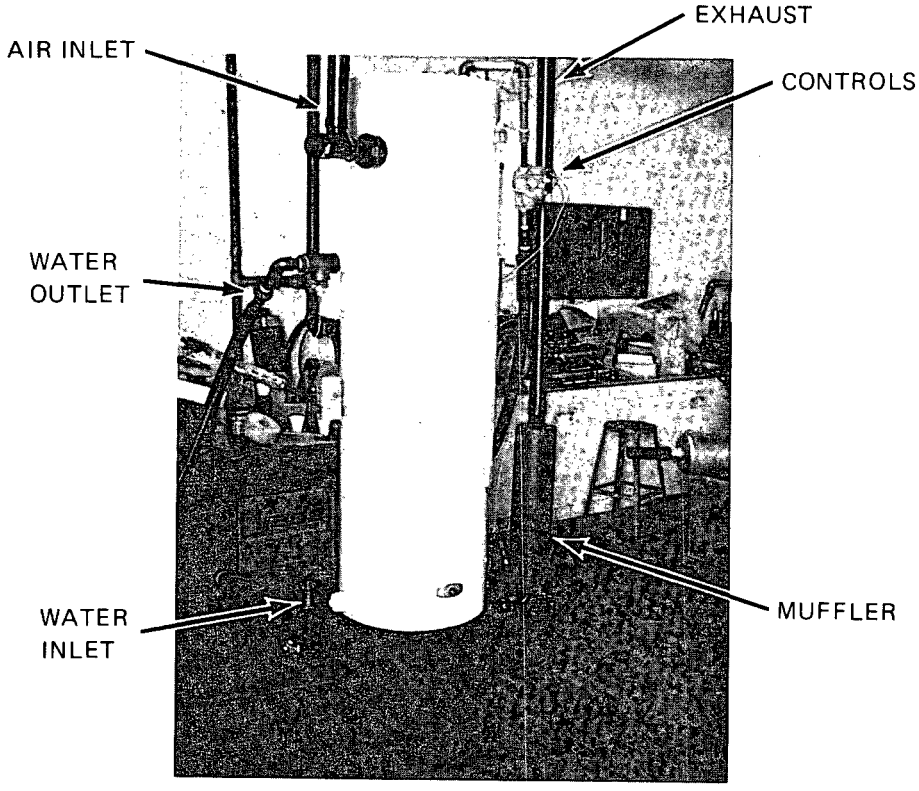

Figure 17. Commercial Pulse-Combustion Water Heater with External Ducting and Muffling

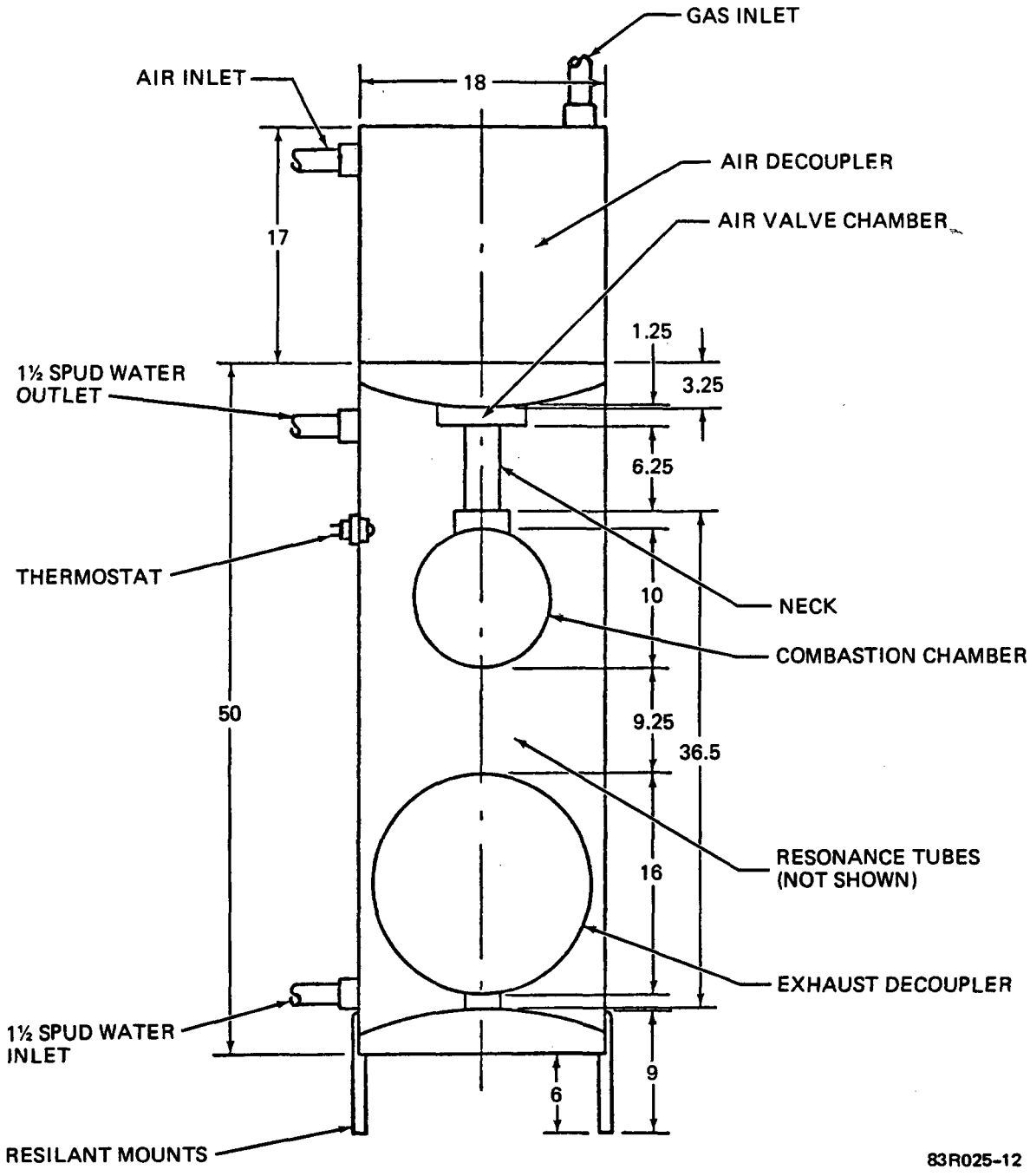

Figure 18. Prototype Instantaneous Commercial Water Heater

Contained within this structure was an 18-inch diameter glass-lined steel tank which was wrapped with an inch layer of fiberglass for thermal and acoustic insulation. This tank had three sections partitioned in a vertical stack. The upper 17 in. was the air decoupler; the middle 50 in. was the main water tank; and the lower 8.5 in. was the preheater tank, which was supported 3.1 in. off the floor, of which 1.4 in. consisted of the resilient mounts.

In the air decoupler was an 80-watt starting blower, a gas decoupler (6 in. diam. by 11 in. long), the associated gas pipe line, and acoustic leaded-foam (1.25 in. thick), which lined the entire inner surface (less the air valve) and was used as a spiral baffle. These are illustrated by Figures 8 and 15.

In the partition between the air decoupler and the main water tank was the air valve (6 in. diam. overall). Figure 19 is a drawing of its backer plate which shows the dimensions and configurations of the ports, the total area of which provided the maximum air opening. The actual air opening (A_{ea}) was determined by the amount of spacing provided for the flapper to travel between the main plate and the backer plate.

The air valve was attached to a reducing chamber in the main water tank which connected it to the combustor neck (3.07 in. diam. by 7.5 in. long). The neck opened into the combustion chamber (10 in. diam., 524 in.^{3} volume). From the combustion chamber the gases entered four intertwining resonance tubes (1.14 in. i.d. by 66 in. long), which opened into the exhaust decoupler (16 in. diam., 2145 in.^{3} volume). All of the combustor components from the air valve chamber through the exhaust decoupler were immersed in the water in the main water tank. They spanned the length of the tank from top to bottom in the order described, such that the hot gases were cooled as they flowed downward and the water was heated as it rose upward from the inlet to the outlet.

The preheater tank was partitioned from the main tank for structural purposes and contained the SHE, described in Section 4.6.1.1. Its inlet was connected to the exhaust decoupler with a 2-1/2-inch-diameter tube. The assembly is photographed in Figure 13. Water flowed first into the preheater, and from there into the lower end of the main tank, and exited out the side of the main water tank, 3.5 in. from its top partition.

The water inlet and outlet connections were capable of receiving 1-1/2-inch pipe fittings. Standard drain spouts were provided for each the main tank and the preheater tank. The gas inlet was connected through a 1/2-in. pipe nipple.

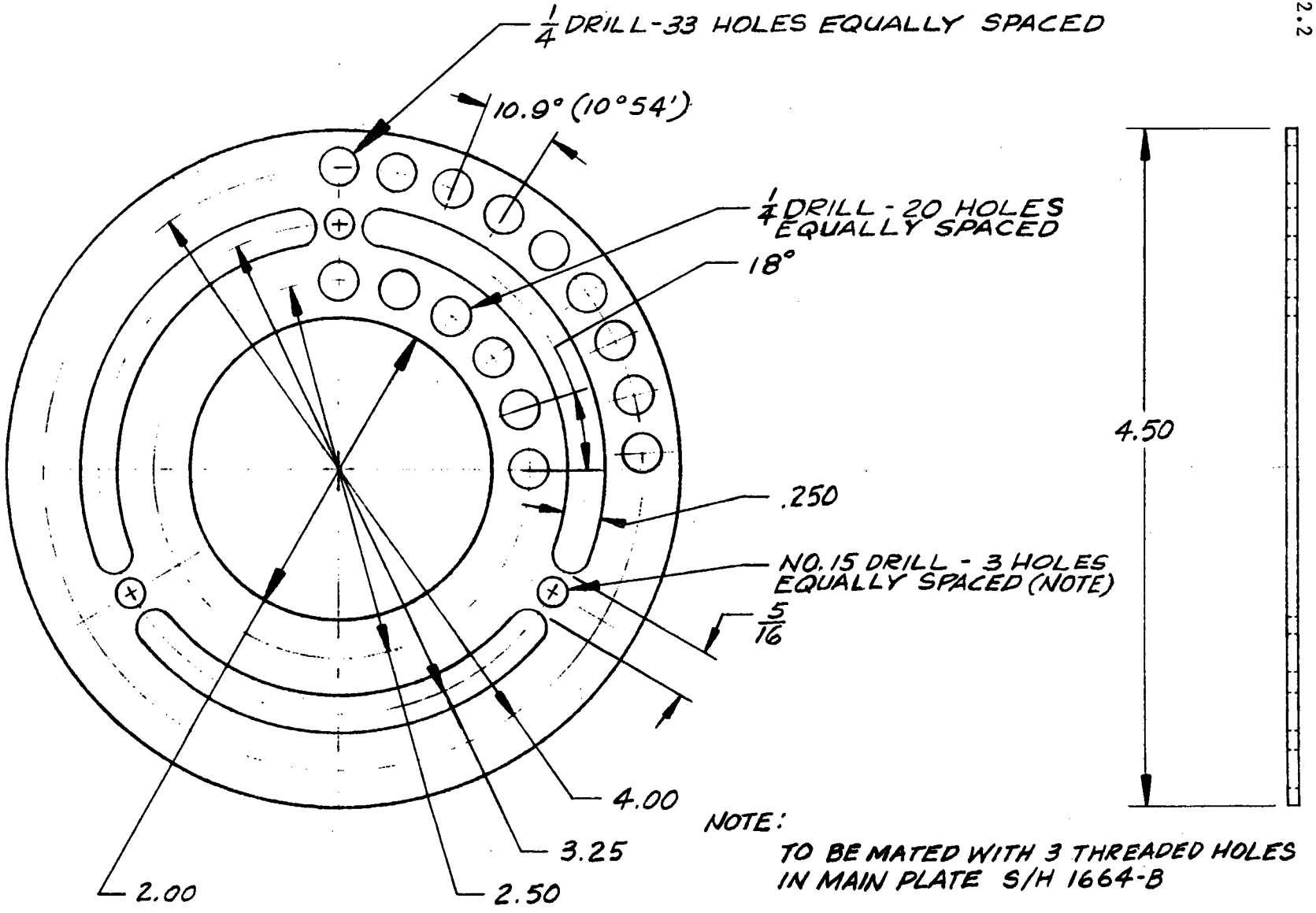

Figure 19. Air Valve Backer Plate for second set of Stampable Valves.

The electrical controls included the following. The automatic gas valve was a single-stage Honeywell VR845M1013. The direct spark ignition module was a Honeywell S87A, which uses a single electrode for both the ignitor and the flame sensor. The spark was ignited by a Champion N12Y spark plug. The starting blower was a Dayton shaded pole model 4C442. The thermostat was a White Rogers type 11B96-1 located about 22 in. from the top of the main water tank. A variable timer controlled the blower for both prepurging and starting. A second variable timer controlled a delay of the ignition until a purge occurred. These timers were Macromatic, model SS6262(JJ,Y). A relay was also provided to control the second stage of a two-stage gas valve, if used. This was a Potter and Brumfield, 115 Vac, DPDT general purpose relay (KRP11A).

The ducting for incoming air and exhaust gases was 2 in. diam. ABS plastic. A 3 x 2 in. reducer connected it to the unit at the inlet of the starting blower. Plastic flexible tubing drained the exhaust condensates.

4.7.2 Operational Data. For the water heater's final tests, the single-stage gas valve was used because it resulted in a 1 to 2% higher gas input rate with clean combustion. Without any ducting or external muffler, the following average values were typical of the unit's performance:

Gas input rate	185 kBtu/h
Gas line pressure (P_g)	1.9 in. w.c.
Operating mean pressure (P_m)	21.5 in. w.c.
CO_2 concentration	9.0%
CO concentration	0.012%
NO_x concentration	41 ppm (22 ng/J)
SPL, 39 in. from inlet	73 dBA
SPL, 39 in. from outlet	75 dBA
Thermal efficiency	97%

The use of both inlet and outlet ducts, each 2 in. diam. by 16 ft. long, lowered the sound levels further, as also did the addition of the 2 in. Donaldson muffler in the exhaust line, with the following results:

W/Ducting	W/Muffler	SPL, dBA	
		Inlet	Outlet
No	No	73	75
Yes	No	66	66
Yes	Yes	64	63

The use of the ducting did not lower the rate as occurred at the AAMC laboratory, and in fact, it raised it to 188 kBtu/h. It raised the CO_2 concentration to 10.7% and the CO to 0.022%.

The use of an external muffler in the exhaust ducting did tend to lower the rate to around 180 kBtu/h.

Another difference observed was the effect of the water temperature on gas input rate. Previously, the rate decreased from 186 to 181 kBtu/h as the water was heated from 90 to 170°F. No such effect was observed with the unit as presently configured.

Nitrous oxides (NO_x) were measured under similar variations in conditions, i.e., with and without ducts and the exhaust muffler. Each condition was continuously charted for NO_x in ppm for 22 to 36 min. and gave the following results:

W/Ducting	W/Muffler	Avg. NO_x	Std. Dev.	Range
No	No	41	2	38-45
Yes	No	42	2	38-45
Yes	Yes	42	3	38-47

The thermal efficiency was measured by two different methods, one based on flue losses (the method of Brokaw), and the other based on the ANSI method of measuring the heat output and input, as described in Section 2.3 of Task 2.1.

Exactly 40 gal. of 73°F water was passed through the water heater at a constant rate of 4.02 gal./min. in 9 min. and 57 sec. During that period 30 $ft.^3$ of input gas was metered for a period of 9 min. and 43.3 sec. The outlet water temperature remained at 164 $\pm$1°F. This data was used to calculate the thermal efficiency according to the formula given in the ANSI Standard. Using the constants of 8.324 lbs./gal. of water (at 73°F), a correction factor of 0.959, and a heating value of 1055 $Btu/ft.^3$, the thermal efficiency was calculated to be 97.5%. The gas input rate was 187 kBtu. To put this in perspective, the energy input was sufficient to raise the temperature of 240 gal. (1,992 lb.) of water an hour from 73°F to 164°F.

However, calculating by the method of Brokaw, the thermal efficiency was 96.5%. The flue temperatures were observed to be a constant 106°F, or 24°F above the room temperature. Other observations used to make this calculation were a relative humidity of 40%, a room temperature of 82°F, a barometric pressure of 29.79 in. Hg, and a CO_2 concentration of 10.7%.

5. SUMMARY AND CONCLUSIONS

A prototype instantaneous commercial water heater was designed, built, and tested. With four 1-inch resonance tubes, the temperature of the combustion gases entering the secondary heat exchanger was 126 to 139°F. This enabled the SHE to be coated with various organic polymers for compatibility with the corrosive gases. The unit ran at 185,000 Btu/h and generated sound levels of 75 dBA without ducting, 65 to 67 dBA with ducting, and 64 dBA with a 2-inch external muffler on the exhaust. With the SHE, the thermal efficiency was 97%.

6. RECOMMENDATIONS FOR FUTURE WORK

The prototype is now ready for production engineering, and then the fabrication of units for laboratory and field tests. The basic simplicity of the design makes it suitable for a first-generation model. In addition, the same basic unit in a larger tank would serve as a storage model.

The production engineering should be directed towards simplifying the fabrication. A smaller air decoupler is possible by a redesign and elimination of the flapper valve adjusting rods. An all-steel SHE with fewer fins would reduce the cost. A one-stage valve should be adequate for the control system. Foamed insulation should also be examined for the tank.

With the instantaneous model approaching the marketplace, attention can then be directed towards development of the storage model. Here the stratification may not be as beneficial and a small circulating pump may be required to minimize this potential problem. Otherwise, the components, except for the tank diameter, could be identical.

GLOSSARY

A_{ea}	Equivalent orifice area of air flapper valve, in.^{2}.
A_{eg}	Equivalent orifice area of the gas flapper valve, in.^{2}.
dBA	Decibels, A-Scale, which is attenuated at low frequencies to simulate the response of the human ear.
dB-lin	Decibels, linear scale (flat response).
Decoupler	Reservoir used to attenuate oscillating pressures of acoustic or fluid media; surge tank; acoustic isolator.
GFWH	Gas-Fired Water Heater.
i.d.	Inside diameter.
in. w.c.	Inches, water column (gage pressure; sometimes W. G.)
Instantaneous Water Heater	A water heater with a ratio of gas input to water capacity greater than 2000 Btu/h-gal. (California Energy Commission).
LIRA	Luft Infrared gas Analyzer.
NPT	National pipe threads.
P_g	Mean gas line pressure as it enters the gas decoupler, (in. w.c.).
P_k	Peak operating pressure in the combustion chamber, (in. w.c.).
P_m	Mean operating pressure in the combustion chamber, as measured at the air flapper valve, (in. w.c.).
Proto	Prototype.
Pulse Combustion	An oscillatory combustion process whose periods are regulated by the length of an harmonic resonance tube, and whose peak pressures are a function of the combustion zone volume and the size of its inlet and outlet openings.
Quad	Unit of Energy = 10^{15} Btu.
SHE	Secondary Heat Exchanger.
SLM	Sound level meter.
SPL	Sound pressure level, decibels.
Therm	Unit of energy = 10^5 Btu.