No. 2628

CONSERVING ENERGY IN DOMESTIC REFRIGERATORS THROUGH THE USE OF REFRIGERANT MIXTURES

DR. W.F. STOECKER, P.E.
Fellow ASHRAE

DR. D.J. WALUKAS
Member ASHRAE

ABSTRACT

Domestic refrigerators perform refrigeration at two temperature levels, so an applicable refrigeration cycle is one that employs two evaporators. If a refrigerant mixture is used in the circuit and directed in series first through the low- and then the high-temperature evaporator, the progressively rising temperatures reduce the irreversibilities in the cycle.

The paper provides a literature review and then a series of simulations of several different cycles with varying mixtures of refrigerants. In a single evaporator cycle the energy characteristic of a system utilizing the refrigerant mixture is improved significantly by the addition of a liquid-suction heat exchanger. In a system with two evaporators operating at two different temperature levels, the analysis showed a possibility of saving approximately 12% compressor power by using a 50/50% mixture of Refrigerant 12/Refrigerant 114 in comparison to pure Refrigerant 12 with the chosen values of evaporator loads, and sizes of heat exchangers and evaporators. The results are encouraging, particularly since the cycle was not an optimized one, but on the other hand, heat-transfer coefficients for the mixture were assumed identical to those for the single refrigerant, and some researchers report a reduction for mixtures. Certain practical considerations, such as the behavior of the mixture with oil, also must be explored.

The energy-conserving potential of refrigerant mixtures.

A refrigeration system employing refrigerant mixtures experiences sliding temperatures in the evaporator and condenser. These sliding temperatures provide the means of conserving energy in certain applications.

A temperature-concentration diagram of an ideal binary solution at a given pressure has the characteristics shown in Fig. 1a. The three regions defined by the curves are superheated vapor, mixture of liquid and vapor, and subcooled liquid. The line separating the mixture region from the superheated vapor region is the saturated vapor line, and the saturated liquid line separates the mixture and subcooled liquid regions. In the equilibrium conditions represented in Fig. 1b the vapor is saturated vapor and the liquid is saturated liquid. Both substances A and B exist in both the vapor and liquid, but at different concentrations. If the temperature is t_1, the concentration of A and B in the liquid is indicated by point M and the concentration in the vapor is indicated by point N.

*Research sponsored by the Office of Buildings and Community Systems, U. S. Department of Energy under Contract Number W-7405-eng-26 with the Union Carbide Corporation.

By acceptance of this paper, the publisher or recipient acknowledges the U.S. Government's right to retain a non-exclusive, royalty-free license in and to any copyright covering the paper.

W. F. Stoecker, Professor of Mechanical Engineering, University of Illinois at Urbana-Champaign, Urbana, IL; D. J. Walukas, Development Staff Member, Energy Div., Oak Ridge National Laboratory, Oak Ridge, TN.

When a single substance boils at constant pressure the temperature remains constant, but when a binary mixture boils at constant pressure the temperature changes. If a binary refrigerant mixture in the subcooled state enters a tube that is being heated, as in Fig. 2, the progression of states is shown on the t-x diagram in Fig. 3. A major difference in the behavior of the refrigerant mixture in the boiling process compared to the single refrigerant is that the temperature increases in the vaporization portion of the process as well as during the warming of the subcooled liquid and in the superheating of the vapor.

If a mixture of refrigerants has a concentration of component A of x_A^* is employed in a refrigeration system, as shown schematically in Fig. 4, the statepoints can be shown on the t-x diagram of Fig. 5. There are two pressure levels prevailing in the system--the high-pressure level from the compressor discharge to the expansion device inlet, and the low-pressure level from the expansion device outlet to the compressor inlet. In the cycle of Figs. 4 and 5 it is assumed that refrigerant leaves the condenser, point 3, as saturated liquid, and leaves the evaporator, point 1, as saturated vapor. Point 4 entering the evaporator will be a mixture of liquid and vapor, and point 2 leaving the compressor will be superheated vapor.

A comparison of evaporating and condensing refrigerant temperatures may be made between the mixed-refrigerant cycle of Figs. 4 and 5 with a single-refrigerant cycle. If the leaving temperature of the chilled fluid is t_b, as shown in Fig. 4, a single refrigerant must be at a temperature lower than t_b throughout the evaporator, while with the mixed refrigerant only t_4 need be lower than t_b, so long as t_1 is below the entering chilled fluid temperature t_a and the refrigerant all through the evaporator is at a lower temperature than the temperature of the chilled fluid opposite to the refrigerant in the evaporator. Correspondingly, the temperature of the single condensing refrigerant must be higher than the outlet condenser cooling fluid temperature t_d. With a refrigerant mixture, t_2 must be higher than t_d, t_3 higher than t_c, and the condensing refrigerant must be at a higher temperature along the condenser than the adjacent cooling fluid.

The rough matching of the sliding temperatures of the refrigerants with the fluid being cooled or the condenser cooling fluid permits some of the refrigeration to be performed with a higher evaporating temperature and/or a lower condensing temperature than would be possible with a single refrigerant. Thermodynamically this relaxation of the temperature restrictions is the reason for an improved coefficient of performance of the system using a refrigerant mixture.

Several requirements for the mixed-refrigerant cycle to achieve improvements are immediately apparent: the temperatures of fluids cooling the condenser and being cooled in the evaporator must change through their corresponding components, and counterflow heat exchange must be achieved between these fluids and the refrigerant.

Review of previous work on refrigerant mixtures.

The attempts to use a mixture of working substances in a refrigeration cycle date back at least to 1888 (Pictet), although early attempts to apply refrigerant mixtures did not fully appreciate the requirements for the mixtures that would result in cycle improvements. Carr[9*] in 1949 wrote one of the good early papers that was sound from a thermodynamic standpoint to show the possibility of conserving power by taking advantage of the change in temperature during evaporation of a mixture. Haselden and Klimek[15] performed both analytical and experimental work that pointed out both the potential and a few of the problems to be expected. During the major portion of the decade of the 1950's there seems to have been little research conducted, but then again in the 1960's and 1970's numerous research conducted throughout the world has explored the use of refrigerant mixtures primarily for two objectives: (1) achieving a low evaporator temperature with a moderate pressure ratio during single-stage compression, and (2) conserving energy when the refrigeration duty consists of cooling a fluid stream through a large temperature range.

Most of the commercial systems utilizing a refrigerant mixture are applied in the chemical and process industries[18,46], such as in liquefied natural gas plants. Centers of research whose efforts have been directed toward the potential application of appliances, such as domestic refrigerators/freezers have been particularly active in the Soviet Union, East Germany, West Germany, and India. Tschaikovsky's 1963 research which he continued to pursue was influential in stimulating the recent wave of interest in the application of refrigerant mixtures. Lorenz and Meutzner[35] studied the two-evaporator domestic refrigerator/freezer and reported power savings as high as 20% with a 50/50 mixture of R-22/R-11 in comparison to pure R-12.

*Refers to numbered papers in Bibliography.

The authors of this current paper conducted a literature review[44] as part of an evaluation of the potential of using refrigerant mixtures and this review can be summarized as follows: The potential for conserving energy in a single-evaporator refrigeration system, such as in Fig. 4, is thermodynamically valid. Furthermore, the provision of additional heat-transfer surface at the evaporator or condenser is more effective in reducing power in the refrigerant mixture system than in the single refrigerant system.

Two-evaporator refrigerator.

The thinking behind the interest in exploring refrigerant mixtures for a two-evaporator refrigerator/freezer is that the two levels of evaporation provide an approximate duplication of the sliding temperature of the fluid being chilled which is the situation where refrigerant mixtures have potential benefit. If, as in Fig. 6, air is cooled in two evaporators, the changing boiling temperature of a refrigerant mixture could accommodate the two different temperature levels, and could perform the high-temperature refrigeration with a higher evaporating temperature. Many refrigerator/freezers now pass some of the cold air from the freezer compartment to the refrigerator compartment thus using the low evaporating temperature to perform all of the refrigeration.

Objective of the simulation studies.

A study to compare the performance of the refrigeration system using a single refrigerant with one using a mixture, both experimentally and analytically, is not straightforward. For example, to compare the power requirement of a single-refrigerant system where the evaporating temperature is uniform at t_1 (in Fig. 6) with the mixed-refrigerant system of Fig. 6 is not fair, because the mixed refrigerant system will demand a greater heat-transfer area due to the reduction in mean temperature difference between the air and the refrigerant.

Even experimental studies where a series of tests on a given system are run first with a single refrigerant, then with progressively higher percentages of a second refrigerant, can be misleading. The reason is that the second refrigerant has either a greater or a lesser density than the original refrigerant. If the system has a constant-displacement compressor and the temperature levels of the fluid being chilled remain constant the addition of a denser refrigerant is likely to increase the capacity and require greater temperature differences in the evaporator and condenser, which decreases the coefficient of performance (COP) of the cycle. If the second refrigerant is less dense than the original refrigerant, the capacity is likely to decrease, but the COP increases. Adjusting the displacement rate of the compressor for each different refrigerant mixture to maintain a constant capacity is necessary to eliminate the capacity influences on the COP.

A further complication in comparing a single- with a mixed-refrigerant cycle is that refrigerant-to-refrigerant heat exchangers aid the mixed-refrigerant cycle and have little or no influence on the COP of the single refrigerant cycle. Developing reliable simulation models of the system will also facilitate design and possible optimization of commerical applications, because the cost must be estimated of numerous configurations and distributions of heat-transfer area.

Choice of refrigerant mixtures.

In order to compute specific magnitudes in the simulations, a certain combination of refrigerants had to be chosen. That choice in this study was R-12/R-114. This combination is not claimed as the best mixture, but it may be a good choice. The following reasoning influenced the temporary selection of the R-12/R-114 mixture.

Refrigerant 12 is a commonly-used refrigerant in domestic refrigerators at the present time, and this refrigerant remains miscible with oil at the low temperatures experienced in this appliance. The mixture R-12/R-22 might be a candidate, but there is not a wide spread between the temperatures on the t-x diagram. In fact, such references as Kandlikar[19], Kriebel[25], Loeffler[32], Neilson[39], and Spauschus[43], point out the possibility of forming an azeotrope with this combination.

Lorenz[33] urged choosing refrigerants with widely differing boiling temperatures at a given pressure in order to achieve a large temperature difference between the saturated liquid and saturated vapor lines as in Fig. 1a. If R-12 is the base refrigerant the other refrigerant should have a boiling temperature much higher or much lower than R-12. Lower boiling-point refrigerants could include R-13 and R-11. Refrigerant 13 has been studied by Agarwal[1], Arora[5],

Kazacki[21], Markorov[37], and Tschaikovsky[47]. Refrigerant 13 has a low critical temperature, although this property should not rule out R-13 permanently. Refrigerant 11 has been explored by Bonarev[6] and Lorenz, but was not chosen because it has a higher standard COP than R-12. Since this current study is investigating the potential improvements attributable to mixtures, improvements in the COP resulting from gradual substitution of a high-COP refrigerant were eliminated.

The combination of R-12 and R-114 was chosen because (1) the COP's of the two refrigerants at typical evaporating and condensing conditions are about the same, and (2) the combination behaves as an ideal mixture. Eiseman[12] states that mixtures of two polar refrigerants, such as R-22 and R-21, or two non-polar refrigerants, such as R-12 and R-114, behave as ideal mixtures. Kraus[26] also supports this contention. The advantage of using an ideal mixture for the objectives of this study is that the calculated properties will be more accurate.

A summary of the property equations used for the mixture is presented in the appendix.

Single evaporator system with no heat exchanger.

The starting point for the simulations that evaluate the influence of using refrigerant mixtures was a single evaporator system with no heat exchanger, as shown in Fig. 7. The system cools a fluid from -15°C to a temperature of -25°C. The refrigeration load associated with cooling this fluid was arbitrarily specified as 0.2 kW. Heat is rejected to a stream of cooling fluid that enters at 25°C and leaves at 32°C. The rate of heat rejection from the cycle varies as the power requirement of the compressor changes, and it is assumed that the flow rate of the condenser coooling fluid is adjusted to maintain the 25 to 32°C temperature rise. The conditions of the refrigerant at key points in the cycle are shown in the t-x diagram of Fig. 8. Saturated vapor leaves the evaporator at point 1 and saturated liquid leaves the condenser at point 3. Refrigerant leaves the compressor at point 2 superheated. Point 4 following the expansion valve will be a mixture of liquid and vapor, and the concentrations of R-114 in the liquid and the vapor are shown in Fig. 8 as points 4L and 4V, respectively. The statepoint 4 positions itself such that the enthalpy $h_3 = h_4$, and that the fraction of liquid, designated FL, is such that

$$FL\ x_{4L} + (1 - FL)\ x_{4V} = x_4$$

and

$$FL\ h_{4L} + (1 - FL)\ h_{4V} = h_4 = h_3$$

Further specifications for the system in Fig. 7 are that the product of the U-value and the heat-transfer area of the condenser and evaporator are both 0.05 kW/K. The summary of the simulations for various percentages of R-114 is presented in Table 1.

Table 1. Single Evaporator With No Heat Exchanger

R-114 in mixture,%	Power kW	t_1 °C	t_2 °C	t_3 °C	t_4 °C
0	0.06865	-25.9	34.6	34.6	-25.9
20	0.0646	-21.7	36.5	31.2	-27.1
40	0.0637	-20.5	38.1	29.6	-27.8
50	0.0639	-20.5	38.5	29.3	-27.8
60	0.0644	-20.9	38.5	29.2	-27.6

The minimum power requirement exists at a 40% concentration of R-114. With 0% R-114 (100% R-12) the evaporating temperature and condensing temperature remain constant. As the R-114 concentration increases, the temperature of refrigerant entering the evaporator t_4 decreases while the temperature leaving increases to maintain a constant mean temperature difference. Similarly in the condenser, t_2 rises and t_3 drops as the R-114 concentration increases.

The predicted maximum decrease in power and increase in COP is 7.2%.

ingle evaporator cycle with heat exchanger.

Almost all of the recent analytical and experimental studies of mixed refrigerant systems ave employed cycles with a liquid-to-suction heat exchanger. Fig. 9 shows the flow diagram here a heat exchanger subcools liquid coming from the condenser before the liquid passes through e expansion valve. The net effect of the insertion of the heat exchanger is shown on the emperature-concentration diagram of Fig. 10.

The simulation performed on the cycle in Fig. 9 specified that saturated liquid left the ondenser, point 3. Also saturated vapor entered the compressor, point 1, so the fluid on the old side of the heat exchanger was boiling refrigerant. An option for the designer would be to perate with some superheat entering the compressor. The following UA products were selected: vaporator, 0.05 kW/K; condenser 0.05 kW/K; and heat exchanger, 0.003 kW/K. Table 2 shows the esult of these simulations.

Table 2. Single Evaporator System With Heat Exchanger

R-114 in mixture,%	Power kW	t_1 °C	t_2 °C	t_3 °C	t_4 °C	t_5 °C	t_6 °C
1	0.0682	-25.7	34.7	34.3	-14.9	-25.9	-25.8
20	0.0626	-20.3	36.5	31.1	-12.9	-26.6	-23.1
40	0.0606	-18.2	38.0	29.5	-11.1	-27.5	-21.0
50	0.0604	-18.0	38.4	29.2	-10.0	-27.8	-20.4
60	0.0606	-18.3	38.4	29.2	-10.2	-27.9	-20.3

The minimum power requirement occurs with a 50% concentration of R-114. The power require- nt of 0.0604 kW is 11.4% less than the 1% concentration. Because the computer program for e simulation was structured for the expectation of a refrigerant mixture, it failed when 0% 114 was attempted, so the very small concentration of R-114, 1%, approximately represents the rformance of R-12 alone.

There is a slight improvement of COP due to the heat exchanger when the refrigerant is ly R-12, but the benefit of the heat exchanger becomes pronounced for refrigerant mixtures as comparison of Tables 1 and 2 shows. The maximum reduction in power of the system with the at exchanger of 11.4% can be compared with the maximum of the system without the heat ex- anger of 7.2%. The mean temperature of the refrigerant through the evaporator is essentially e same both with and without the heat exchanger, because the same 0.2 kW must always be ansferred from the fluid being chilled from -15°C to -25°C. Fig. 10 shows, however, that in der to achieve this mean refrigerant temperature in the evaporator the low-side pressure can higher if a heat exchanger is used. The higher suction pressure permits compression with a wer power requirement.

o-evaporator system.

A major objective of this study was to explore the possibility of conserving energy by ing a refrigerant mixture in a domestic refrigerator where there is a need for refrigeration two different temperature levels as shown in Fig. 6. The cycle proposed for this assign- nt as used by Lorenz and Meutzner[35] is shown in Fig. 11. The specifications and thermal adings of the system are:

1. Refrigeration load at low-temperature evaporator, 0.2 kW.
2. Refrigeration load at high-temperature evaporator, 0.1 kW.
3. Temperature of fluid being cooled by low-temperature evaporator, -20 to -25°C.
4. Product of UA of low-temperature evaporator, 0.05 kW/K.
5. Product of UA of condenser, 0.05 kW/K.
6. Temperature of condenser cooling fluid, 25° to 32°C.
7. Product of UA of Heat Exchanger 1, 0.003 kW/K.
8. Product of UA of Heat Exchanger 2, 0.003 kW/K.
9. Saturated vapor at point 1.

10. Saturated liquid at point 3.

To simulate the system in Fig. 11 with various R-114 concentrations, 44 simultaneous equations were needed. These equations included properties of the refrigerant mixtures, performance characteristics of heat exchangers, material balances, and energy balances. The simulation was performed by the generalized system simulation program described in Ref. 45.

The freezer evaporator transfers 0.2 kW from fluid that is dropping in temperature from -20°C to -25°C. The refrigeration load at the high-temperature evaporator is 0.1 kW, but no UA of this evaporator nor temperature of fluid being chilled was specified. The resulting temperature of refrigerant in the high-temperature evaporator is of the order of -20°C which is sufficiently low for heat exchange to take place.

Conclusions Table 3 indicates the potential of conserving energy in a two-evaporator refrigerator/freezer. From 0.1113 kW (estimated) power requirement with Refrigerant 12 alone, the power requirement drops to a minimum of 0.09799 kW with a 50% mixture of R-114 and R-12. The reduction in the power requirement is thus 12%. The magnitude of this potential saving is attractive, provided that the first cost of the refrigerator would not be excessively increased.

The literature reports some practical considerations that must be met. It will not be possible simply to replace the Refrigerant 12 currently used in most refrigerators with a mixture of refrigerants. For example, the required compressor displacement rate must be altered, and also two heat exchangers are needed in the circuit.

It is possible that the heat-transfer coefficients will be less when a mixture of refrigerants is used. Haselden[15] reported this to be the case. Oil problems will have to be investigated. Oil is quite soluble in Refrigerant 12 at the low temperatures experienced in domestic refrigerators; however, little information is available about the characteristics of oil and mixtures of refrigerants.

To take advantage of the changing temperature of the refrigerant in the evaporator and condenser, strict counterflow heat transfer between the refrigerant and external fluid is mandatory. There will be physical problems in configuring the heat exchangers in domestic refrigerators to achieve strict counterflow.

Another requirement for achieving good heat transfer is that the liquid and vapor remain in equilibrium during the evaporation and condensation process. In two-phase flow there is always a tendency for the vapor and liquid to move at differing velocities--usually the vapor moves faster than the liquid. This "slip" should be avoided, and possible methods of maintaining equilibrium are noted by Burr and Haselden[8].

Even though the results presented in Table 3 for the two-evaporator system indicate that a 50-50 mixture of R-12 and R-114 is optimum, it should not be assumed that the concentration is automatically the optimum. It may be that the concentration that provides the sliding scales of temperatures of refrigerants in the evaporator and condenser that best match the changes in temperatures of external fluids in those components may constitute the optimum concentration of mixture.

While the foregoing precautions should be kept in mind, the system that was simulated was not optimized, and the potential for energy saving using a refrigerant mixture seems attractive.

Table 3. Two-Evaporator System

R-114 in mixture,%	Power kW	t_1 °C	t_2 °C	t_3 °C	t_4 °C	t_5 °C	t_6 °C	t_7 °C	t_8 °C	t_9 °C
1	0.1108	-26.6	37.3	37.0	-27.0	-27.0	-26.9	-26.9	-5.4	-20.2
20	0.1020	-21.2	39.2	33.9	-27.6	-25.9	-25.4	-23.7	-4.0	-18.9
40	0.09824	-18.9	40.7	32.3	-28.4	-24.7	-23.8	-21.2	-2.6	-17.5
50	0.09779	-18.7	41.1	31.9	-28.8	-23.2	-23.2	-20.7	-2.1	-16.8
60	0.09864	-19.1	41.1	31.9	-29.1	-23.9	-23.0	-20.8	-1.8	-16.3

APPENDIX

Properties of Refrigerant Mixtures

Saturation pressure-temperature

R-12: $\ln(p) = 14.861 - 2498.3/T$

R-114: $\ln(p) = 15.407 - 2993.2/T$

where p = saturation pressure, kPa

T = temperature, K

Raoult's law

$$P_a = (y_{a,L})(p_a)$$

where P_a = vapor pressure of substance A in the mixture, kPa

$y_{a,L}$ = mol fraction of substance A in the liquid, dimensionless

pa = saturation pressure of pure A at the existing temperature, kPa.

Molecular weights

R-12	120.93
R-114	170.94

Enthalpy of liquid

R-12: $h_{f,12} = 200.0 + 0.9251t + 0.00081t^2 + 0.0000048t^3$

R-114: $h_{f,114} = 200.0 + 0.9545 + 0.00116t^2 + 0.0000003t^3$

where h_f = enthalpy, kJ/kg

t = temperature, °C.

Enthalpy of saturated vapor

R-12: $h_{v,12} = 351.48 + 0.04283t - 0.00071t^2 - 0.0000051t^3$

R-114: $h_{v,114} = 337.41 + 0.6234t + 0.000086t^2 - 0.00000385t^3$

where h_v = enthalpy of saturated vapor, kJ/kg

t = temperature, °C

BIBLIOGRAPHY

1. Agarwal, R. S. and C. P. Arora, "Thermodynamic Properties of R-12/R-13 Mixtures, XIV International Congress of Refrigeration," Moscow, 1975.

2. Arora, C. P., "Power Savings in Refrigerating Machines Using Mixed Refrigerants," XII International Congress of Refrigeration, Madrid, 1967.

3. Arora, C. P., "Low Temperatures in Refrigerating Machines with R-12 and R-13 Mixtures", XIII International Congress of Refrigeration, Washington, 1971.

4. Arora, C. P., A. K. Mittal, and A. K. Gupta, "An Analysis of the Properties of Mixtures for Vapour Absorption Refrigeration," XIII International Congress of Refrigeration, Washington, 1971.

5. Bijlani, C. A., "Pressure-Volume-Temperature Relationships of Binary Mixtures of Refrigerants," XIII International Congress of Refrigeration, Washington, 1971.

6. Bondarev, V. N., "Investigation of a Heat Pump Operating on a Mixture of Refrigerants," Kholod. Tech., Vol. 48, No. 11, pp. 13-16, 1971.

7. Bougard, J. and R. Jadot, "Calculation of the Equilibrium Diagram for a Mixture of Liquid Refrigerants," XIV International Congress of Refrigeration, Moscow, 1975.

8. Burr, P. S. and G. G. Haselden, "A Non-Isothermal Mixed Refrigerant Cycle for Air Conditioning Duties," Proc. of Inst. of Refrigeration, Vol. 71, pp. 18-25, 1974-75.

9. Carr, F., "Power Savings in Process Refrigeration," Ind. & Engr. Chem., Vol. 41, No. 4, pp. 776-780, April 1949

10. Certok, V. D., A. P. Kuznetzov, D. V. Goncarov, and V. S. Ovcaruk, "The R-143/R-12 Refrigerant Mixture--a Working Substance for Small Refrigerating Units", Luft- und Kältetechnik, Vol. 10, No. 6, pp. 299-301, Dec. 1974.

11. Dmitriev, V. I., et al, "Comparative Tests of an Hermetic Compressor on Freon-12 and a Non-Azeotropic Mixture of Freon-12 and 143," Kholod. Tech., Vol. 31, No. 6, pp. 25-27, 1974.

12. Eiseman, B. J., "Multicomponent Refrigerants," Proceedings of Commissions 3 and 6 of the International Institute of Refrig., Prague, Czech., Sept. 1965.

13. Fuederer, A. and W. Lessenich, "Azeotropic and other Freon-mixtures as Refrigerants," Kältetechnik, Vol. 15, No. 8, pp. 235-239, August 1963.

14. Etherington, T. L., Patent No. 2,951,349 and 2,951,350, Variable Capacity Refrigeration.

15. Haselden, G. G. and L. Klimek, "An Experimental Study of the Use of Mixed Refrigerants for Non-isothermal Refrigeration," J. of Refrig., Vol. 1, No. 4, pp. 87-89, May/June 1958. Paper also reviewed in Modern Refrig., Vol. 61, No. 722, p. 483, May 1958.

16. Heller, Z. E. and A. V. Egerov, "Enthalpy-Concentration Diagrams for Mixtures of R-22/R-115 and R-13B1/R-12," Kholod, Tech., Vol. 48, No. 11, p. 62, 1971.

17. R. Jakobs and H. Kruse, "The Use of Non-azeotropic Refrigerant Mixtures in Heat Pumps for Energy Saving," International Institute of Refrigeration, Meeting of Commission B2, Delft, The Netherlands, Sept. 1978.

18. Kaiser, V., C. Becdelievre, and D. Gilbourne, "Mixed Refrigerant for Ethylene," Hydrocarbon Processing, Vol. 55, No. 10, pp. 129-131, October 1976.

19. Kandlikar, S. G., C. A. Bijlani, and S. F. Sukhatme, "Predicting the Properties of Mixtures of R-22 and R-12, Part I - Thermodynamic Properties," ASHRAE Trans., Vol. 81, Part I, 1975, pp. 266-284.

20. Kazacki, G., "Mixtures in Vapour Refrigerating Systems," Potravinarska a Chladici Technika, Vol. 7, No. 5, pp. 515.147 to 520.152, 1976.

21. Kazacki, G., "Refrigerant Cycles Using Non-Azeotropic Refrigerant Mixtures," Potravinarska a Chladici Technika, Vol. 8, No. 5, pp. 500.132 to 503.135, 1977.

22. Klimenko, A. P., C. E. Krasnoky, and V. M. Kolesnik, "The Utilization of the Generalized Starling-Han Equation for the Computerized Calculation of Thermodynamic Properties of Refrigerant Mixtures," Kholod. Tech., Vol. 53, No. 8, pp. 26-28, 1976.

23. Klimek, L., "The Generation of Cold with Mixtures of Refrigerants and its Industrial Application," Kältetechnik, Vol. 11, No. 2, p. 55, Feb. 1959.

24. Knudsen, H. J. H., and F. H. Larsson, "Refrigerating Plant with Single Stage Compression and Non-Azeotrope Refrigerant Mixture," Kulde, Vol. 25, No. 6, pp. 103-107, Dec. 1971.

25. Kriebel, M., "Liquid-Vapor Phase Equilibria of the Binary System of R-22/R-12," Kältetechnik, Vol. 19, No. 1, pp. 8-14, January 1967.

26. Kraus, W. E., G. Hackstein, and H. Wauer, "Determination of the Thermodynamic Properties of Binary Mixtures of Halogenated Hydrocarbons," XIV International Congress of Refrigeration, Moscow, 1975.

27. Kruse, H., and H. Jakobs, "The Significance of the Non-Azeotropic Binary Refrigerants when Used in Heat Pumps and Refrigeration Plants," Klima-Kälte Ingenieur, Vol. 5, No. 7-8, pp. 253-260, July-August, 1977.

28. Kruse, E., and H. Holdack-Janssen, "Experimental Determination of the Thermodynamic Quantities of Non-azeotropoic Binary Refrigerants," Klima-Kälte Ingenieur, Vol. 5, No. 9, pp. 307-312, Sept. 1977.

29. Kuznetsov, A. P., V. D. Chertok, and V. C. Ovcharuk, "On the Problems of Application of Mixtures of Freons in Small Refrigeration Machines," Kholod. Tech., Vol. 52, No. 6, pp. 43-45, 1975.

30. Kuznetzov, A. P., L. V. Loc. and A. V. Egorov, "Enthalpy-Concentration Diagram of a Mixture of Freon-22 and 13B1," Kholod. Tech., Vol. 50, No. 2, p. 60, 1973.

31. Labochnik, A. E. and M. A. Ceonov, Patent on Two Chamber Refrigerator, Kholod. Tech., Vol. 52, No. 8, p. 51, 1975.

32. Loffler, H. J., "Some Properties of the Binary System Freon-12/ Freon-22 and the Tertiary System of Freon-12/Freon-22/Mineral Oil," Kältetechnik, Vol. 12, No. 9, pp. 256-260, Sept. 1960.

33. Lorenz, A., "On the Utilization of Binary Refrigerant Mixtures in Compression Refrigeration Systems," Luft-und-Kältetechnik, Vol. 9, No. 6, pp. 296-301, Dec. 1973.

34. Lorenz, A., "Investigations of the Use of Non-azeotropic Refrigerant Mixture of R-12/R-11 in Vapor Compression Systems," Luft-und-Kältetechnik, Vol. 11, No. 1, pp. 33-37, 1975.

35. Lorenz, A. and K. Meutzner, "On Application of Non-Azeotropic Two-Component Refrigerants in Domestic Refrigerators and Home Freezers," XIV International Congress of Refrigeration, Moscow, 1975.

36. Lotz, H., "Heat Pumps, Energy Saving by Use of Refrigerant Mixture Compressor System," International Institute of Refrigeration, Meeting of Commission B2, Delft, The Netherlands, Sept. 1978.

37. Makorov, V. N., "Thermodynamic Properties of Mixtures of Freon-12 and 13 at Supercritical Pressures and Temperatures of Freon-13," by V. N. Makorov, Kholod. Tech., Vol. 54, No. 7, pp. 2932, 1977.

38. McHarness, R. C. and D. D. Chapman, "Refrigerating Capacity and Performance Data for Various Refrigerants, Azeotropes and Mixtures," ASHRAE Trans., Vol. 67, pp. 441-464, 1961.

39. Neilson, E. F. and D. White, "The Heat of Vaporization and Solution of a Binary Mixture of Fluorocarbons," J. Phys. Chem., Vol. 63, No. 9, pp. 1363-5, Sept. 1959.

40. Saluja, S. N., "Use of Mixed Refrigerants in Vapour Compression Refrigeration Machines," Refrig. and Air Cond., Vol. 81, Part I, Jan. 1978, pp. 27-34; Part II, Feb. 1978, pp. 32-35; and Part III, Mar. 1978, pp. 80-83.

41. Schwind, H., "Application of Binary Refrigerant Mixtures and their Presentation in the Enthalpy-pressure Diagram," Kältetechnik, Vol. 14, pp. 98-105, April 1962.

42. Smirnov, G. F., "Calculation of Heat-and Mass-Transfer During Condensation of Binary Mixtures on Finned Surfaces," Kholod. Tech., No. 12, pp. 31-33, 1975.

43. Spauschus, H. O., "Vapor Pressures of Mixtures of Refrigerants 12 and 22," ASHRAE Journal, Vol. 4, No. 9, pp. 49-51, 123, Sept. 1962.

44. Stoecker, W. F., "Improving the Energy Effectiveness of Domestic Refrigerators by the Application of Refrigerant Mixtures," ORNL/Sub-78/55463/1, Oak Ridge Nat. Lab., Sept., 1978.

45. Stoecker, W. F., "A Generalized Program for Steady-State Simulation," ASHRAE Trans. Vol. 77, Part I, pp. 140-148, 1971.

46. Swenson, L. K. and J. L. Peterson, "The Pritchard Mixed Refrigerant Process," Third Int. Conf. on LNG, Washington, DC, Sept. 24-28, 1972, Session II, Paper 1.

47. Tschaikovsky, V. F. and A. P. Kuznetsov, "Utilization of Refrigerant Mixtures in Refrigerating Compression Machines," XI International Congress of Refrigeration, Munich, 1963.

48. Tschaikovsky, A. F. and A. P. Kuznetzov, "Investigation of Mixtures of Refrigerants in Compression Refrigeration Machines," Kholod. Tech., Vol. 40, No. 1, pp. 9-11, 1963.

49. Tschaikovsky, V. F., A. P. Kuznetsov, and N. I. Vodyanitskaya, "Investigation of Refrigerating Machines Operating with Mixtures of Refrigerants," XII International Congress of Refrigeration, Madrid, 1967.

50. Tschaikovsky, V. F., G. F. Sminov, and R. A. Domansky, "Investigations of the Process of Condensing Two-Component Mixtures of Freon-12 and 22," Kholod. Tech., Vol. 49, No. 3, pp. 41-42, 1972.

51. Tschaikovsky, V. F., A. P. Kuznetzov, V. D. Chertok, and U. A. Bacutinski, "Experimental Investigation of a Two-Stage Refrigeration Machines Operating on a Mixture of Freon-12 and Freon 23," Kholod. Tech., Vol. 49, No. 4, pp. 7-9, 1972.

52. Tschaikovsky, V. F., R. A. Baktozin, E. E. Pukanov, and B. V. Puchkob, "Investigation of the Heat- and Mass-Transfer by Condensation of Mixtures of Freon-12 and -22 on Horizontal Finned Tubes," Kholod. Tech., Vol. 50, No. 2, pp. 24-28, 1973.

53. Tschaikovsky, V. F., R. A. Domansky, and B. V. Puchkob, "Calculation of the Heat- and Mass-Transfer Area for Condensation of R-12/R-22 Mixtures on Horizontal Tubes," Kholod. Tech., Vol. 53, No. 8, pp. 24-26, 1976.

54. York-Shipley British Patent 778483, Modern Refrigeration, Vol. 60, No. 713, pp. 342-348, August 1957.

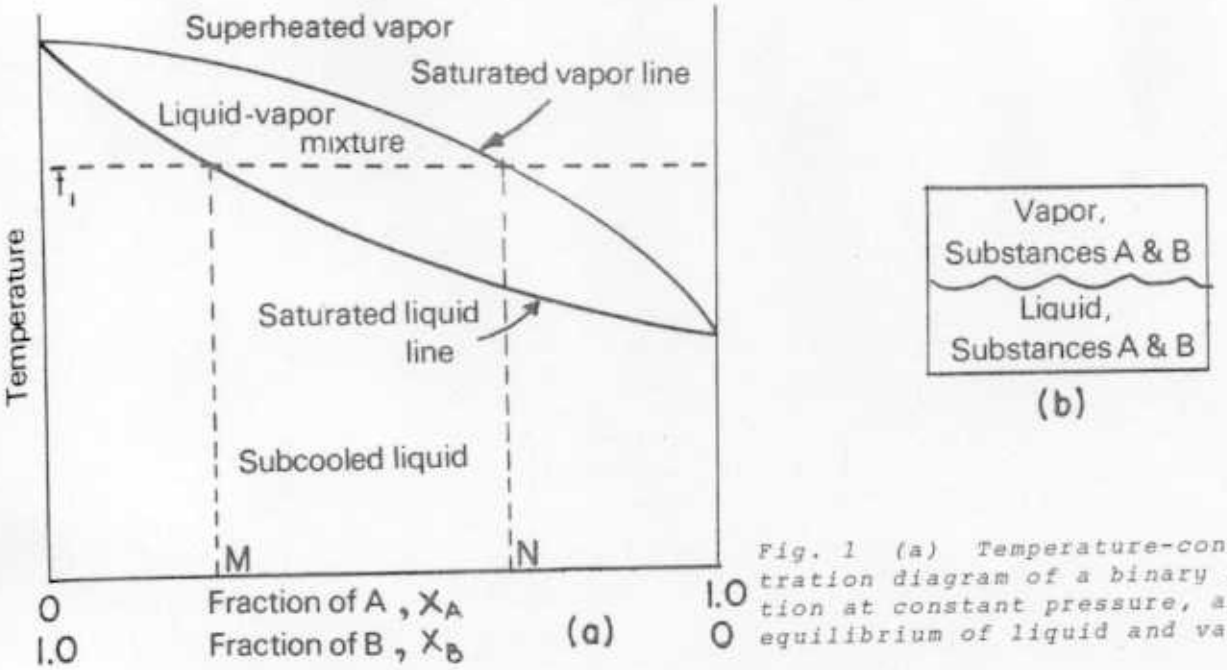

Fig. 1 (a) Temperature-concentration diagram of a binary solution at constant pressure, and (b) equilibrium of liquid and vapor

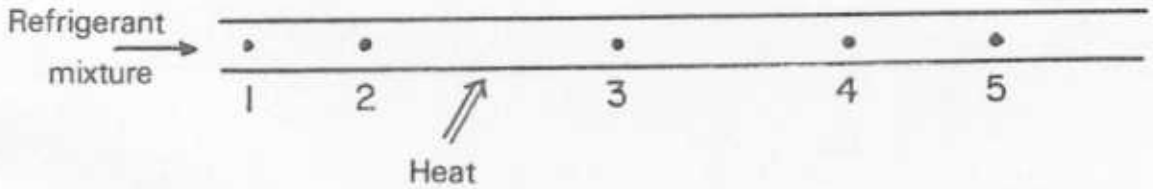

Fig. 2 Refrigerant mixture flowing through an evaporator tube. Point 1, subcooled liquid; point 2, vaporization begins; point 3, mixture of liquid and vapor; point 4, vaporization complete; and point 5, superheated vapor.

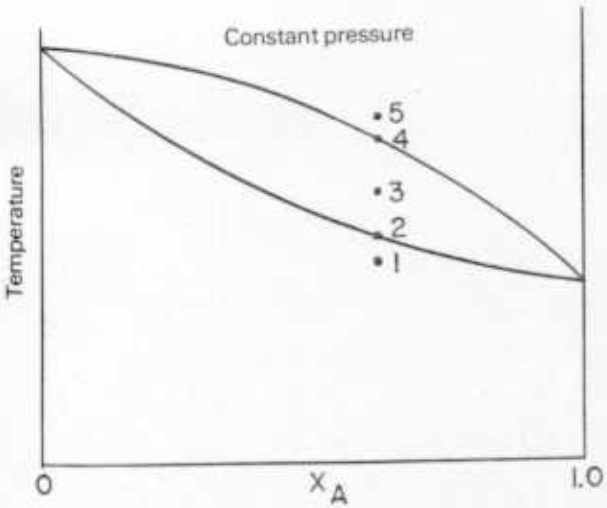

Fig. 3 Temperature-concentration diagram of boiling process corresponding to Fig. 2

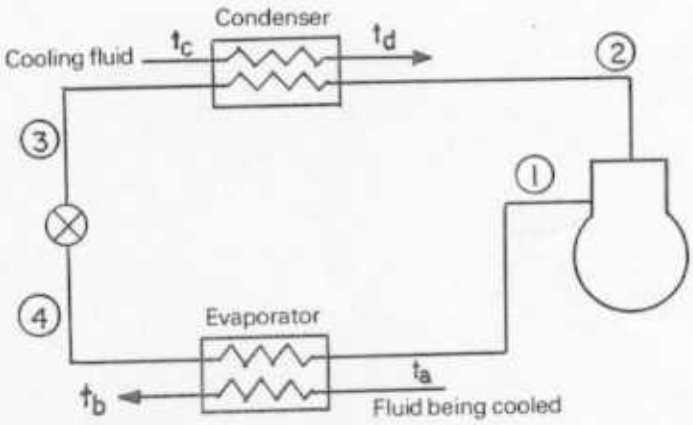

Fig. 4 Refrigeration system using a mixture of refrigerants

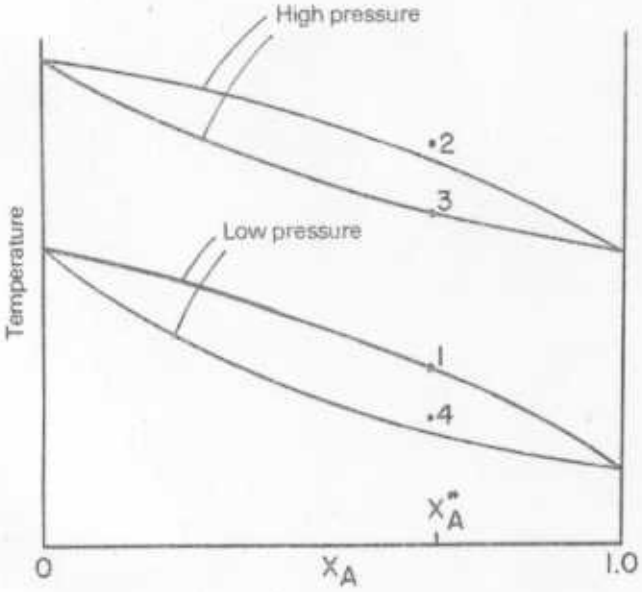

Fig. 5 Temperature-concentration diagram for refrigeration system in Fig. 4

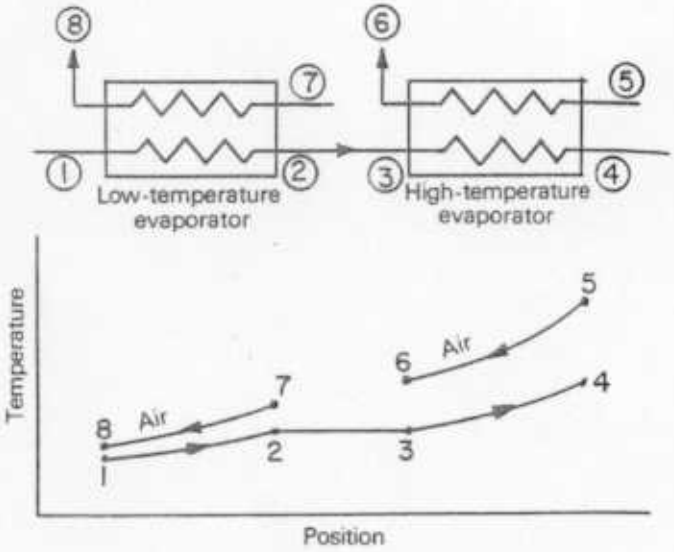

Fig. 6 Refrigerant mixture flowing in series through a low-and a high-temperature evaporator

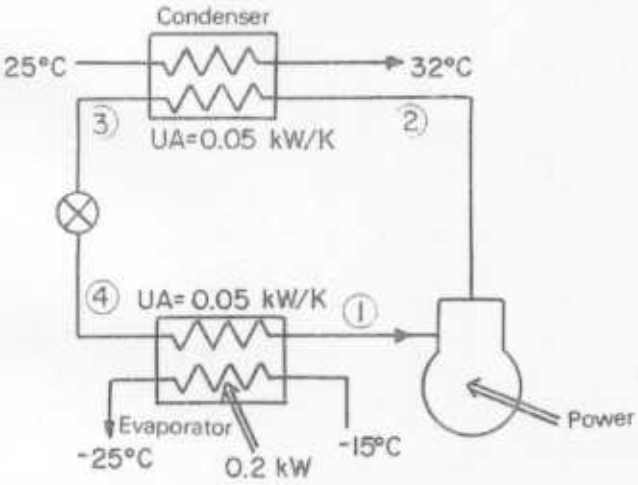

Fig. 7 Single evaporator system with no heat exchanger

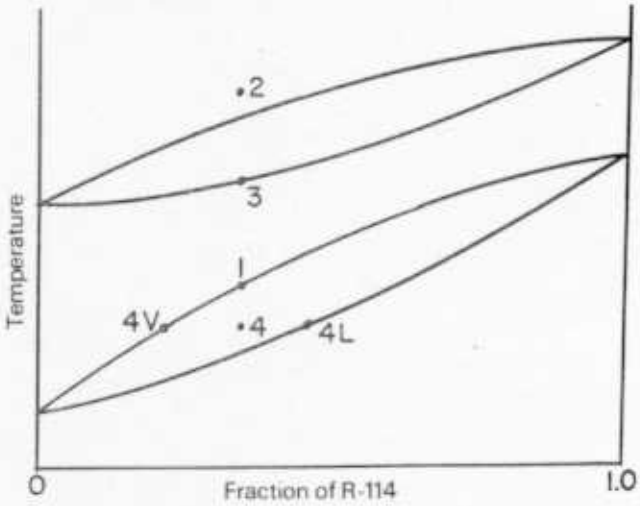

Fig. 8 Temperature-concentration diagram

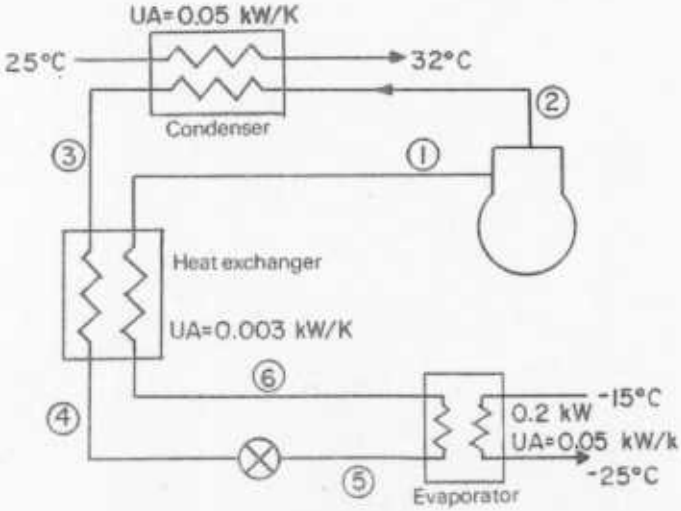

Fig. 9 Single-evaporator system with heat exchanger

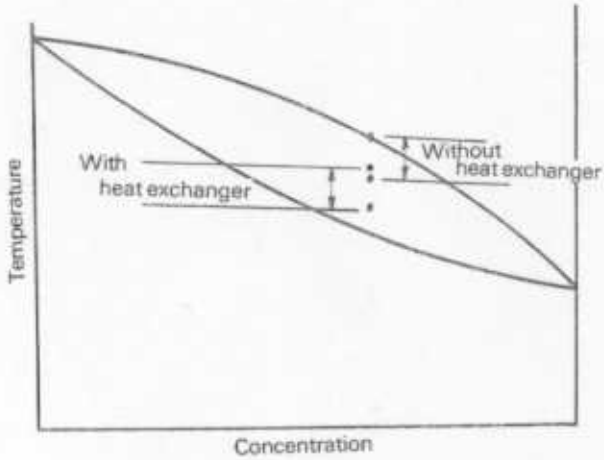

Fig. 10 Effect of heat exchanger on refrigerant temperatures in the evaporator

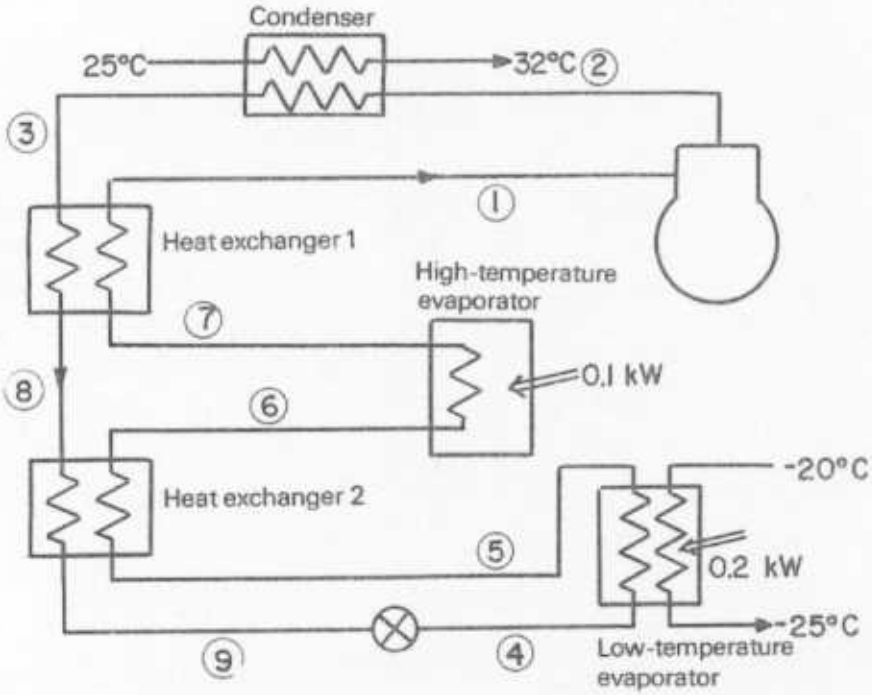

Fig. 11 Two-evaporator system for a refrigerator/freezer