Cool, Dry, Quiet

CDQ™ Dehumidification with Climate Changer™ Air Handlers

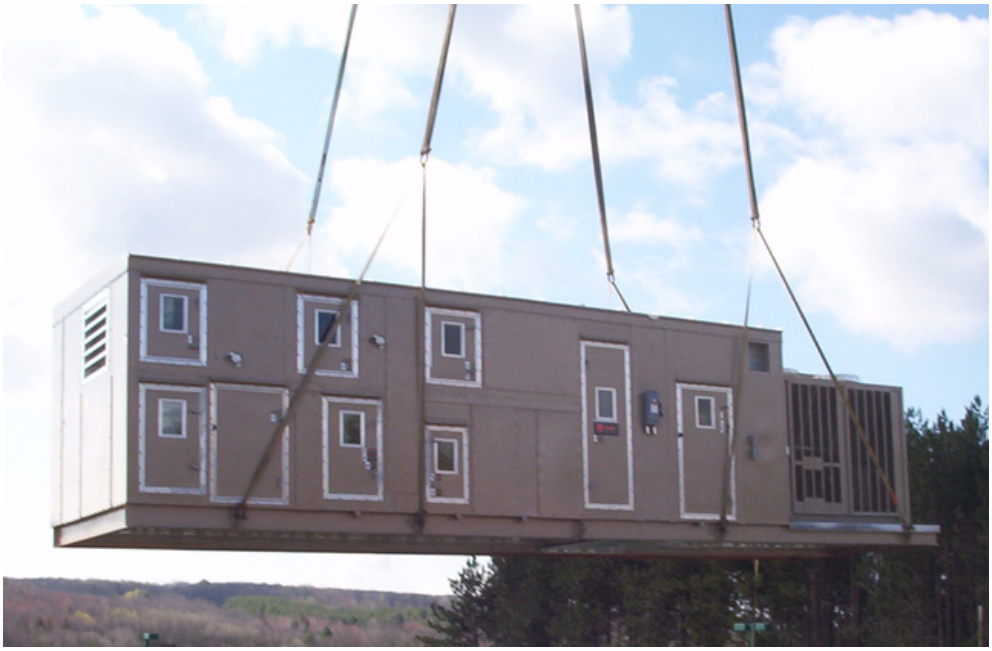

March 2006

CDQ-SLB002-EN

Trane CDQ™ (Cool Dry Quiet) System Concept

Triple the amount of water removed

The Trane CDQ™ desiccant dehumidification system is an award winning method for controlling space humidity. A CDQ desiccant wheel is configured in series with the cooling coil to significantly improve the coils ability to remove water. When operating, the CDQ wheel transfers water vapor from downstream of the cooling coil to the air upstream of the coil. The cooling coil gets a "second shot" at dehumidifying the air. Adding CDQ to a Trane air handler can double and even triple the amount of water removed.

CDQ breaks the dewpoint barrier!

CDQ is more then just a better dehumidifier. CDQ breaks the dew point barrier! With a standard CDQ unit, dewpoint is 3 to 8 degrees lower than a coil-only unit. An enhanced CDQ unit can have a dewpoint up to 20 degrees drier. Enhanced CDQ uses a preheat coil to dry the air even more for space humidity control in very critical applications like operating rooms, labs and museums. Humidity control can be active 24/7, at full and part-load. Trane controls, now a part of every CDQ unit, can use one percent, two percent, and three percent precision humidity sensors as a single unit solution for controlling humidity, temperature and ventilation.

Trane Custom Climate Changer™ air handlers with CDQ systems can have onboard DX or chilled water chillers, giving building owners turnkey system flexibility. The overall unit performance is so outstanding that Frost and Sullivan ranked the Trane CDQ desiccant dehumidification system as the best new HVAC dehumidification product for 2006.

Figure 1. CDQ Airflow path

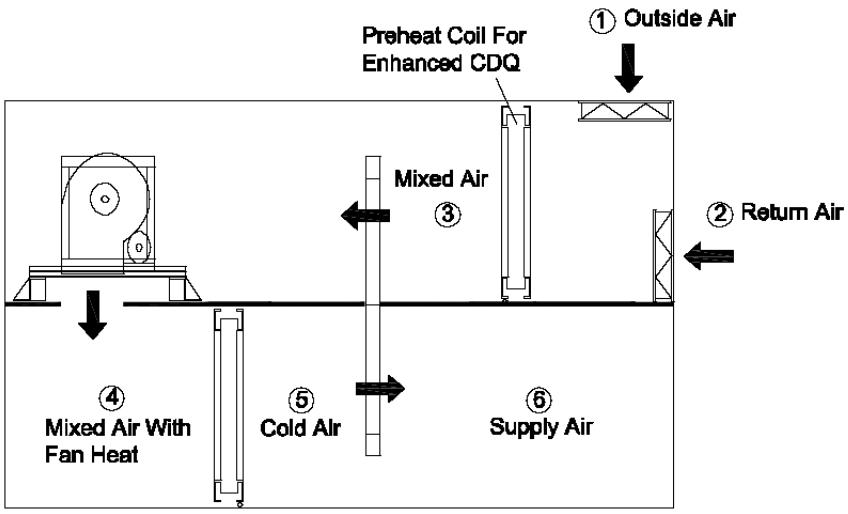

Figure 2. Psychrometric representation of Figure 1

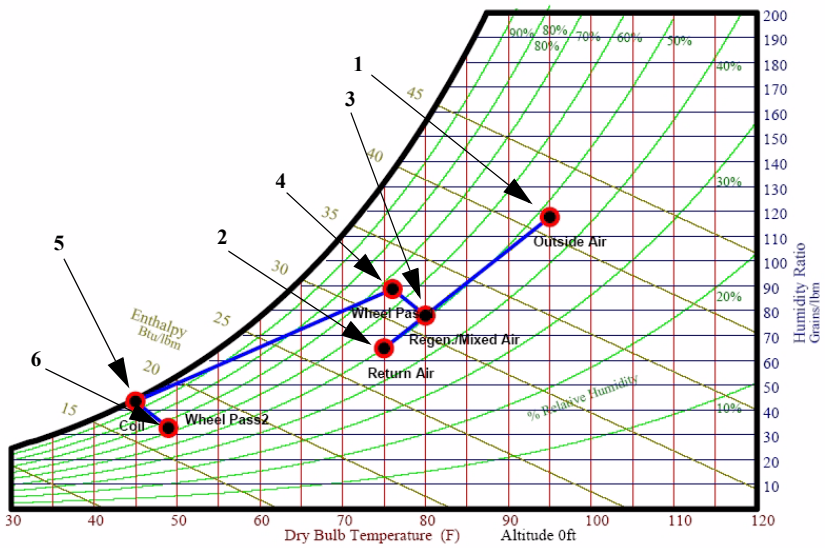

Figure 3. Representative dehumidification increase using Trane CDQ dehumidification system

Standard HVAC coil - 20% latent
1 times water removal per cfm

Trane CDQ - 40% latent
2 times water removal per cfm

Enhanced CDQ - 60% latent
3 times water removal per cfm

© 2006 American Standard Inc. All rights reserved

Trane Climate Changer™ air handler with CDQ dehumidification

The CDQ unit is a mixed-air, 100-percent return air, or 100-percent dedicated outdoor air unit. Mixed air goes through an optional preheat coil, CDQ wheel, supply fan, cooling coil, optional reheat coil, optional final filters. A CDQ system in a Custom Climate Changer™ air handler can have attached condensing units, chillers and water piping packages. All CDQ units have Trane unit controls and temperature/humidity sensors designed for the application. A Traq™ outside airflow monitoring sensor and a fan inlet airflow measuring system with a piezometer ring are optional. Size range is 1,000 - 70,000 cfm.

Note: Under LEED, this unit may qualify for innovation points.

Figure 4. Trane air handler with CDQ dehumidification

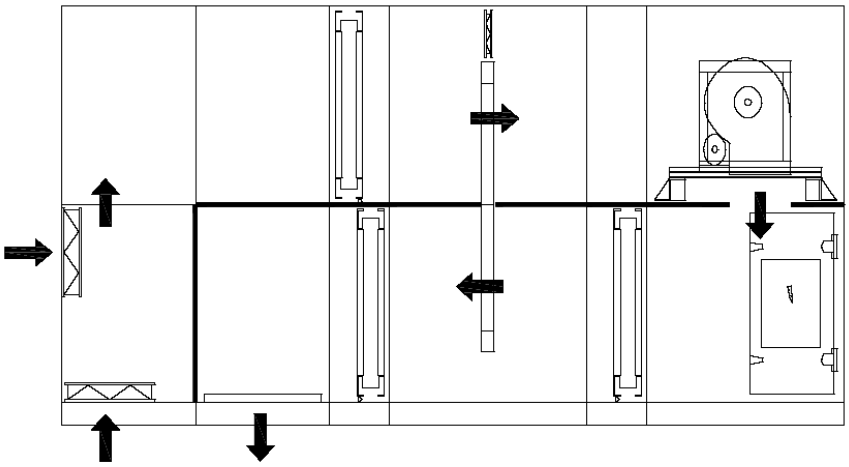

Trane Climate Changer™ air handler with CDQ dehumidification and energy recovery

Trane air handlers can include both a CDQ dehumidification wheel and an energy recovery wheel for thermal savings. These units are 100-percent dedicated outdoor air units or mixed-air units. All CDQ units have Trane controls and sensors. Size range: 1,000 to 70,000 cfm.

Note: Under LEED, this unit may qualify for innovation points.

Figure 5. Trane air handler with CDQ dehumidification and energy recovery

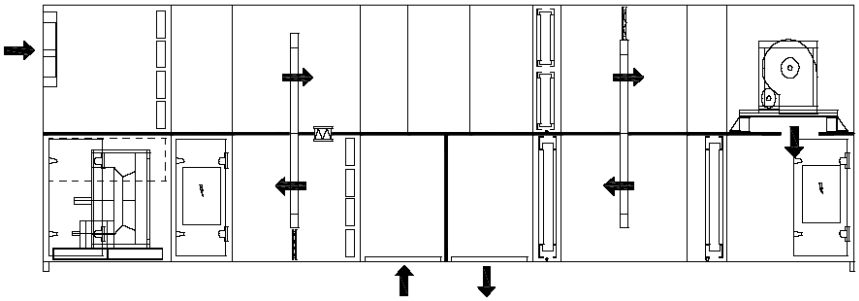

Developed in collaboration with the U.S. Department of Energy through Oak Ridge National Laboratory.

2006 FROST & SULLIVAN
HVAC Dehumidification Systems
Product Innovation of the Year Award

Manufactured under one or more of the following U.S. Patents: 4,719,761; 6,237,354; 6,973,795; 7,017,356

Trane CDQ™ Applications

The CDQ system can be applied in applications that require active humidity control. CDQ system benefits over cool-reheat units varies, but, in general, you can expect:

- Higher latent capacity per ton of total capacity,
- Lower achievable supply-air dew point, and
- Reduced reheat energy
- Quieter operation

Very low controlled humidity spaces. In the very low 35 to 45 percent relative humidity applications, the air handler supply-air dew point needs to be in the 25° F to 40° F dewpoint range. Enhanced CDQ units can achieve these levels without using complex and expensive gas heat regenerated desiccant wheels, glycol chillers or refrigeration defrost DX systems.

Low controlled humidity spaces. In the 55 to 60 percent relative humidity spaces, the space dewpoint will be in the 40 - 57 dewpoint range. A CDQ unit, with it's increased latent capacity and lower SHR (Sensible Heat Ratio), can match sensible and latent output to the space at full and part load. The result: Tighter humidity control with less energy and noise.

For more information, go to **www.trane.com/cdq**.

Dry Storage/Archives. This space type has a small latent load in the space and requires very little ventilation air to be introduced. The challenge for humidity control is keeping the space humidity at the desired low level. Since the mixed-air relative humidity is low, the CDQ desiccant wheel will be operating at its most efficient conditions to help lower the supply-air dew point. This will raise the required coil temperature and also lower the need for reheat.

Hospital Operating Rooms. Operating rooms should be at a low relative humidity (35-55 percent RH) and cool (60°- 68° F). This is an excellent application for CDQ. The improved latent capacity not only reduces the required cooling needed but the supply-air dew points can eliminate the need for a secondary refrigeration coil or a heat-regenerated active desiccant system. Because active desiccant systems provide hot air (which would then require a significant amount of post-cooling), using a CDQ system can result in significant energy savings.

Laboratories. A CDQ system can help achieve the lower relative humidity needed for laboratories. Because the exhaust air often contains contaminants, total energy (enthalpy) recovery from the exhaust air is usually not permissible. A CDQ system can improve energy efficiency and latent removal from the space without the need for exhaust air stream.

Schools and Colleges. Space latent load in classrooms can be high year round due to the high occupancy levels, resulting in a lower SHR at part load conditions. A CDQ air handler can help achieve the higher latent capacity needed in classrooms. The system can be either constant volume or variable air volume (VAV). Humidity levels in schools can elevate times when the buildings are unoccupied. The same air handler can be used as a recirculating dehumidifier to keep the humidity levels under control during unoccupied hours.

Retail Stores and Restaurants. Using a CDQ air handler with a DX system can provide better part-load dehumidification without requiring as much cooling or reheat energy as a cool-reheat system.

Office Buildings. A constant volume or VAV system can be enhanced to get better humidity control in the space. A CDQ system can also be helpful in offices designed with under-floor air distribution. Air delivered at floor level is at a warmer dry-bulb temperature (typically around 65°F). This can create a dehumidification challenge in many climates. A CDQ system can deliver air at 65°F dry-bulb temperature, and at a dew point of 55°F to 58°F, without the need for overcooling and reheat (or mixing in bypassed return air).

Trane
A business of American Standard Companies
www.trane.com

For more information, contact your local Trane office or e-mail us at comfort@trane.com

Literature Order Number	CDQ-SLB002-EN
Date	March 2006
Supersedes	New

Trane has a policy of continuous product and product data improvement and reserves the right to change design and specifications without notice.