©2007, American Society of Heating, Refrigerating and Air-Conditioning Engineers, Inc. (www.ashrae.org). Published in ASHRAE Journal, Vol. 49, May 2007. This posting is by permission of ASHRAE. Additional reproduction, distribution, or transmission in either print or digital form is not permitted without ASHRAE's prior written permission.

This school in Georgia was part of a research investigation emphasizing humidity control, energy efficiency and indoor air quality.

High-Performance Schools

High Marks for Energy Efficiency, Humidity Control, Indoor Air Quality & First Cost

By John Fischer, Member ASHRAE; **Kirk Mescher, P.E.,** Member ASHRAE; **Ben Elkin, P.E.,** Member ASHRAE; **Stephen M. McCune, AIA;** and **Jack Gresham**

This article demonstrates how school facilities can be designed and operated to comply with ASHRAE's ventilation, energy and thermal comfort standards[1,2,3] while remaining energy efficient and cost effective. Research findings from a DOE-sponsored demonstration site show systems that actively control temperature, space humidity and ventilation can perform beyond the standards' requirements. Novel engineering solutions and equipment designs proved to substantially increase operating efficiency, and meet point requirements for LEED certification. The construction cost of this advanced HVAC system was comparable to that of conventional HVAC systems that consume more energy and have been shown to be less effective at controlling humidity and ensuring proper ventilation.

A May 2003 ASHRAE Journal article[4] summarized findings of a comprehensive indoor environmental research investigation conducted for school facilities. Sponsored by the U.S. Department of Energy (DOE) and completed in cooperation with the Georgia Tech Research Institute (GTRI) and Georgia State University, the investigation monitored the indoor environment in 10 Georgia schools over a

About the Authors

John Fischer is director of research and development for SEMCO Inc., Columbia, Mo. **Kirk Mescher, P.E.,** is a principal with C&M Engineering, Columbia, Mo. **Ben Elkin, P.E.,** is an energy consultant to the Floyd County Board of Education, Rome, Ga. **Stephen M. McCune, AIA,** is vice president of architecture for Southern A&E, Atlanta. **Jack Gresham** is the executive director of facilities, Floyd County Board of Education, Rome, Ga.

period of two years. Among other observations, the researchers concluded that the schools equipped with conventional packaged HVAC equipment could not be operated with sufficient ventilation air to satisfy the recommendations of ANSI/ASHRAE Standard 62-2001, *Ventilation for Acceptable Indoor Air Quality*. The study found the outdoor air had either been shut off or significantly reduced in each school in an attempt to improve humidity and address comfort complaints, including poor indoor air quality. It concluded that school designers needed an energy-efficient, packaged HVAC system that could control temperature and humidity while continuously delivering a minimum of 15 cfm (7 L/s) of outdoor air per student.[4–10,14]

That research provided the basis for the development of a novel integrated active desiccant—vapor compression hybrid rooftop (IADR) packaged unit specifically designed to meet this need. DOE, through the Oak Ridge National Laboratory (ORNL) cofunded the development of the system.

The IADR system integrates the benefits of active desiccant dehumidification with an advanced vapor compression heat pump cycle into a compact, hybrid packaged unit. It is designed to accommodate any percentage of outdoor air, and will deliver air much drier than vapor compression alone. As shown in *Figure 1*, the system brings outdoor (or return) air (1) through a fan and DX cooling coil (2). Some of this air is passed through an active desiccant wheel (3) while the remainder is bypassed (4) to provide supply air (5) having the desired sensible heat ratio. A small amount of outdoor air (6) is heated to regenerate the active desiccant wheel, picking up the adsorbed moisture and venting it outdoors (7).

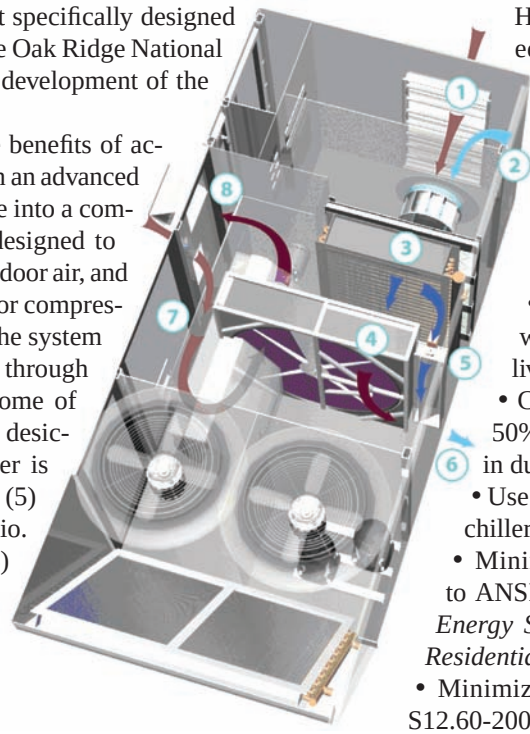

Figure 1: Flow schematic of the IADR.

An IADR was installed to condition the ORNL Combined Heating and Power Laboratory where it has been instrumented and continuously monitored over the past two years. ORNL testing confirmed the low dew point capability and high operating efficiency. Specifically, EER performance at part load conditions was measured as 42% higher than conventional packaged equipment (18 versus 12.7). The principal reasons for this improvement included the use of variable speed compressors combined with optimized control algorithms.[11–13]

Based on the success of the ORNL research and the established need to improve HVAC designs applied to school facilities, DOE cofunded an installation in a newly constructed high school to demonstrate that schools can be economically designed to be energy efficient, comfortable, and operated to maintain a high level of indoor air quality. This project built upon the knowledge base provided by the DOE schools IAQ investigation and IADR development program.

Site Description and Design Scheme

Pepperell High School is located near Rome, Ga., approximately 50 miles (80 km) northwest of Atlanta. This 200,000 ft^2 (18 580 m^2) facility, designed for 1,200 students includes three main classroom wings, a media center, an administrative area, a cafeteria, a large performing arts center and a gymnasium. *Figure 2* provides a breakdown of the various school departments and associated HVAC details.

When planning for the construction of the new Pepperell High School, the design team was instructed to integrate progressive technologies like premium efficiency lighting with motion detectors, LED exit signs, and waterless urinals. Because the greatest energy consumer within a school facility is the HVAC system, it was given the highest priority.

Key HVAC design priorities included:

- Outdoor air ventilation in accordance with Standard 62-2001 (consistently delivered);
- Cooling season space relative humidity of 50% at 75°F (24°C)[14] and avoid saturated air in ductwork;
- Use packaged direct expansion equipment (no chillers or boilers were desired);
- Minimize HVAC operating costs according to ANSI/ASHRAE/IESNA Standard 90.1-1999, *Energy Standard for Buildings Except Low-Rise Residential Buildings* (low demand/consumption);
- Minimize classroom noise to satisfy the ANSI S12.60-2002 sound criteria limit of 35 dbA;
- Minimize maintenance costs and optimize remote monitoring support;
- Maximize usable net interior floor area and architectural appeal of the final structure; and
- Minimize any first cost premium over traditional HVAC designs.

The HVAC design used for the Pepperell project (referred to from this point forward as the advanced design) allowed these priorities to be met.

Advanced DOAS Design

Two design decisions impacting the main classroom wings proved to be instrumental in accomplishing the stated goals.

The first decision was to "decouple" all latent loads from the main VAV air handling unit. By dehumidifying the outdoor air volume to a low dew point, the IADR system, operating as a dedicated outdoor air system (DOAS), was able to remove the latent loads from both the outdoor and indoor airstreams. The control system measured the dew point of the return air entering the main VAV system. Based on that value, the supply air dew point leaving the IADR was modulated (down to as low as a 38°F [3°C] dew point), to ensure the space humidity did not rise above a 55°F (13°C) dew point. The many benefits offered by this dedicated outdoor air system approach have been extensively reported by Fischer,[7] Bayer,[6] Mumma[16] and others.

This allows the supply air temperature leaving the VAV unit to be modulated to meet the sensible load requirements of the individual classrooms—rather than being dictated by the need for dehumidification. Removing all of the humidity loads with the dedicated outdoor air system avoids the "over-cooling and reheat" approach common to most VAV systems, greatly improving the overall system efficiency. It also complies with Standard 90.1-1999, which recommends against using reheat from new energy sources for humidity control purposes. A contrast in energy use between the Pepperell HVAC design shown as *Figure 3* (advanced design) and the baseline (conventional) approach shown as *Figure 5* highlights the importance of following 90.1 recommendations.

School Area Served	Area (ft^2)	Supply (cfm)	Outdoor (cfm)	VAV (yes/no)	Equipment Used
Classroom Wing A (North and South)	41,835	45,764	12,000	Y	2 DOAH,* 4 VAV AHUs, 4 VS Condensing units†
Classroom Wing B (North and South)	18,250	18,000	4,950	Y	2 TC Hybrid units,‡ VAV
Classroom Wing C (North and South)	41,835	54,470	11,175	Y	2 DOAH,* 4 VAV AHUs, 4 VS Condensing units†
Media Center Wing B	7,350	6,000	900	N	DOAS,‡ VAV AHU, VS Condensing unit†
Administration/ Reception Wing B	7,650	5,000	420	Y	DOAS,‡ VAV AHU, VS Condensing unit†
Atrium Wing B	5,875	5,200	930	N	DOAS,‡ VAV AHU, VS Condensing unit†
Cafeteria and Kitchen	12,445	10,700	3,750	N	TC Hybrid unit,§ 1 RTU**
Band and Choral	9,550	5,450	1,650	Y	TC Hybrid unit,§ VAV
Performing Arts Center	16,450	18,200	7,500	N	TC Hybrid unit,§ 1 RTU
Gymnasium and Locker Rooms	35,500	27,920	16,120	N	2 TC Hybrid units,§ multiple RTUs
Total	196,740	196,704	59,395		

*Active desiccant–vapor compression hybrid system operated as a dedicated outdoor air system (DOAH). Includes total energy recovery, variable speed compressors and other enhancements for energy efficiency (*Figure 1*).
†VAV air-handling units served by remote condensing units with heat pump integration using variable speed compressor option.
‡Total recovery–passive desiccant dedicated outdoor air system (DOAS) preconditioning to three AHUs served by remote condensing units with heat pump integration and variable speed compressor option..
§Active desiccant–vapor compression hybrid system operated as a variable volume system to handle all outdoor and space loads. Includes total energy recovery, variable speed compressors, etc., as shown in *Figure 12* (Advanced Design 2).
**RTU refers to conventional rooftop unit. In most cases, the RTUs are staged with the IADR systems and used only at times of peak occupancy.

Figure 2: Site summary with brief mechanical description.

The second critical design decision was to use the IADR dedicated outdoor air systems with total energy recovery modules to measure and deliver a constant supply of preconditioned outdoor air to the VAV air-handling units. This approach ensures that even as the airflow supplied by each main VAV air-handling unit varies from its high of approximately 10,000 scfm (4718 L/s) (during peak cooling) to a low of 4,300 (peak heating), the amount of outdoor air delivered to the occupied spaces complies with Standard 62-2001 recommendations. During unoccupied times, the outdoor air intake is reduced and return air is conditioned by the IADR, using primarily the active desiccant wheel to maintain an upper limit to the space humidity level.

Figure 3 provides a simplified flow schematic of the advanced HVAC design used for the main classroom areas. Measured data is presented for four operating state points throughout the system. Cooling and heating season data is provided at peak and part load conditions.

Accurate Load Modeling

Data summarized in *Figure 3* was used to calculate the actual sensible and latent loads for one classroom zone at Pepperell High School. These actual loads were compared to those calculated for the classroom areas using ASHRAE recommended guidelines discussed in chapters 29 and 30 of the *2001 ASHRAE Handbook—Fundamentals*.[17] These calculations reflected a well constructed, tight facility using high efficiency lighting. A value of 200 Btu/person (211 kJ/person) was used to estimate the latent load associated with the occupants, reflecting moderate activity as recommended by the DOE-sponsored indoor air quality research findings.[4,6]

The results of this analysis are summarized in *Figure 4.* As shown, the calculated loads agree quite well with the actual loads that existed. This confirms that following recommendations of the *ASHRAE Handbook—Fundamentals* allows an accurate estimate of building loads.

Some commercially available modeling programs do not accurately reflect the internal latent loads associated with occupants and infiltration. Without careful user input, the resultant HVAC designs may result in schools having the high humidity conditions and low ventilation rates reported in Reference 4.

These loads confirm the high latent load fractions (low SHR) that challenge designers of school facilities, necessitating the use of "over-cooling" with costly zone reheat to control space humidity with conventional HVAC systems. The alternative is to accept high space humidity levels and/or reduce ventilation, sacrificing IAQ in an attempt to reach comfort. This common

compromise has been reported by Fischer, Bayer, Downing and others.[4,5,6,7,9,10,15,18,19]

Comparison with Conventional Baseline System

To compare costs and benefits of the advanced system, the authors modeled the behavior of a conventional VAV system with terminal reheat. Energy data is provided for this approach with and without the addition of total energy recovery preconditioning (*Figure 6*).

Comparisons with other non-conventional systems that offer an opportunity for considerable energy savings over the baseline system chosen have been made, but are beyond the scope of this article. After careful consideration, the traditional VAV approach was chosen as the baseline system since it is commonly seen in school facilities, it is considered to be energy efficient, and it has the ability to control space humidity while delivering the outdoor air quantities recommended by Standard 62-2001.

It is difficult to design a functional VAV system using direct expansion[18,19] without the use of variable speed capacity control like that built into the advanced system approach. For the purpose of comparison, we have assumed that the cooling capacity of the conventional DX approach analyzed can be modulated similar to that of a chilled water system.

Figure 5 includes a schematic describing this conventional VAV system and provides the performance state points associated with operating this system to satisfy the same ventilation and humidity control requirements delivered by the advanced approach shown in *Figure 3*. This schematic shows the addition of a hot water boiler and heating coil to preheat the combined return and

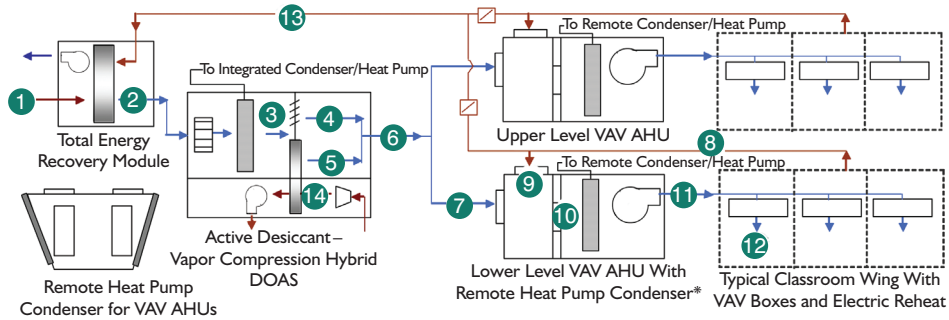

System State Point	Weather Conditions Evaluated			
	88°F/132 gr.	77°F/109 gr.	62°F/82 gr.†,‡	34°F/24 gr.‡
(Psychrometrics/Airflow)	(°F/grains)	(°F/grains)	(°F/grains)	(°F/grains)
1 Outdoor Air	88°F/132 gr.	77°F/109 gr.	62°F/82 gr.	34°F/24 gr.
	5,035 cfm	5,035 cfm	5,035 cfm	5,035 cfm
2 After Recovery Wheel	78.6°F/87 gr.	75.5°F/80 gr.	69.2°F/71 gr.	61°F/33 gr.
	4,725 cfm	4,725 cfm	4,725 cfm	4,725 cfm
3 After Hybrid DOAS Coil	52.6°F/57 gr.	53.5°F/60 gr.	57.6°F/70 gr.	61°F/33 gr.
	4,725 cfm	4,725 cfm	4,725 cfm	4,725 cfm
4 Hybrid DOAS Bypass	52.6°F/57 gr.	53.5°F/60 gr.	57.6°F/70 gr.	61°F/33 gr.
	2,363 cfm	3,185 cfm	3,065 cfm	4,020 cfm
5 After Desiccant Wheel	86°F/24 gr.	99°F/13 gr.	106°F/16 gr.	61°F/33 gr.
	2,362 cfm	1,540 cfm	1,665 cfm	705 cfm
6 Preconditioned Outdoor Air	69.3°F/41 gr.	68.3°F/45 gr.	74.4°F/51 gr.	61°F/33 gr.
	4,725 cfm	4,725 cfm	4,725 cfm	4,725 cfm
7 Outdoor Air to VAV AHU	69.3°F/41 gr.	68.3°F/45 gr.	74.4°F/51 gr.	61°F/33 gr.
	2,925 cfm	2,925 cfm	2,925 cfm	2,925 cfm
8 Return Air from Zones	75.2°F/68 gr.	75°F/67 gr.	72.1°F/66 gr.	70.7°F/38 gr.
	8,861 cfm	7,447 cfm	5,542 cfm	3,948 cfm
9 Return Air to AHU	75.2°F/68 gr.	75°F/67 gr.	72.1°F/66 gr.	70.7°F/38 gr.
	6,225 cfm	4,810 cfm	2,905 cfm	1,311 cfm
10 Mixed Air to AHU Coil	73.3°F/59 gr.	72.5°F/59 gr.	73.2°F/58 gr.	64°F/34 gr.
	9,150 cfm	7,735 cfm	5,830 cfm	4,236 cfm
11 VAV AHU Supply Air	62°F/59 gr.	66°F/59 gr.	78.2°F/58 gr.	92°F/34 gr.
	9,150 cfm	7,735 cfm	5,830 cfm	4,236 cfm
12 VAV Box Supply Air§	62°F/59 gr.	66°F/59 gr.	78.2°F/58 gr.	92°F/34 gr.
	1,830 cfm	1,520 cfm	1,105 cfm	912 cfm
13 Exhaust to Recovery Wheel	75.2°F/68 gr.	75°F/67 gr.	72.1°F/66 gr.	70.7°F/38 gr.
	4,253 cfm	4,253 cfm	4,253 cfm	4,253 cfm
14 Desiccant Regeneration	198°F/132 gr.	173°F/109 gr.	168°F/82 gr.	NA
	1,223 cfm	1,223 cfm	1,223 cfm	0

*Data shown for the AHU (Points 7-11) serving the lower floor of the northern half of Wing A. The total wing is approximately 20,000ft^2 and includes 18 classrooms..

†These conditions reflects data collected during morning warm-up following night setback, thermal storage of building mass evident in sensible load.

‡Very windy day likely resulting in higher infiltration rates than modeled for sensible and latent loads.

§Electric reheat energy minimized through the control algorithm which uses the AHU heat pump capability as much as possible.

Data presented reflects actual airflow and psychrometric conditions measured at the site via real-time trended instrumentation.

Figure 3: Advanced design with active desiccant hybrid dedicated outdoor air system preconditioning.

Actual Zone Loads (Measured Data) Versus Modeled Zone Loads								
Outdoor Conditions	88°F/132 grains		77°F/109 grains		62°F/82 grains‡,§		34°F/24 grains‡	
	Actual*	**Modeled†**	**Actual**	**Modeled**	**Actual**	**Modeled**	**Actual**	**Modeled**
Internal Loads								
Net Sensible	234,796	228,471	135,331	137,065	–69,138	4,176	–175,401	–192,776
Net Latent	102,279	98,106	76,866	78,957	57,932	56,326	10,368	30,214
Outdoor Loads								
Sensible	65,318		10,206		–63,593		–187,280	
Latent	205,632		134,946		51,410		–28,917	
Total Loads								
Net Sensible	300,114	293,789	145,537	147,271	–132,731	–59,417	–362,681	–380,056
Net Latent	307,911	303,738	211,812	213,903	109,342	107,736	–18,549	1,297
Sensible Heat Ratio	**0.49**	**0.49**	**0.41**	**0.41**				

*Actual loads reflect measured values based on airflows and psychrometric conditions at the site and shown in *Figure 3*.
†Modeled loads based on building design characteristics and ASHRAE recommendations (*2001 ASHRAE Handbook—Fundamentals,* Chapters 29 and 30).
‡Reflects data collected during morning warm-up following night setback, thermal storage of building mass evident in actual sensible load.
§Windy day resulting in higher infiltration rates than modeled for sensible and latent loads.

· All values shown are for one zone consisting of the upper and lower level of the northern half of Wing A, 18 classrooms approximately 21,000 ft^2.
· Load modeling assumes 250 Btu/person sensible and 200 Btu/person latent[4] using a total of 212 occupants for each zone.
· Infiltration assumes a very tight building, 0.1 cfm/ft^2 of exposed wall area. Low wind condition. Lighting load reflects the actual use of 1.125 W/ft^2.

Figure 4: Load analysis—actual documented loads vs. modeled loads.

outdoor airstreams to 55°F (13°C) during the heating season since a conventional heat pump approach, especially without total recovery precondition would not produce the heating capacity needed. A careful review of the state points shown for the conventional approach suggests that during the cooling mode, a substantial reheat load exists at the VAV boxes. Since the minimum box airflow setting must be high enough to deliver the required outdoor air volume and the leaving coil temperature

Advertisement formerly in this space.

must be low enough to satisfy the space internal latent load (*Figure 4*), many spaces would be overcooled without this reheat capability.

Operational, Performance Advantages

The advanced design offers many important operational and performance advantages over the conventional VAV system. A brief summary of these advantages are provided for each of the state points evaluated. Observations made reflect actual data that was trended and collected by the onsite direct digital control system designed to serve as an effective data acquisition site. This approach has been successfully employed on numerous DOE-sponsored research sites, allowing for third-party verification of performance.

Peak Cooling Condition: 88°F/132 grains (31°C/18.9 g/kg)

At the peak ambient humidity condition, outdoor air at a 42°F (5.5°C) dew point (41 grains [5.9 gm/kg]) is delivered by the IADR in order to maintain the desired space humidity level. By using a moderate 53°F (12°C) leaving coil temperature (*Figure 3*) to produce a 42°F (5.5°C) dew point, a high refrigeration efficiency is maintained with the active desiccant wheel producing the necessary dew-point depression. *Figure 7*, highlights this advantage showing the modest amount of IADR refrigeration required to deliver cool, very dry outdoor air to the main VAV air-handling unit.

This dehumidified outdoor airstream also enables the VAV system to operate with sensible-only dry cooling coils. These coils are designed with fewer rows than commonly used, lowering the system pressure loss and significantly reducing fan energy. Likewise, the relative humidity levels throughout the ductwork are maintained below 70%, an ASHRAE recommendation to avoid potential fungal contamination.

The 62°F (17°C) supply air temperature from the advanced system reflects the field-measured sensible load within the occupied spaces (*Figures 3* and *4*). This air temperature is reset upwards by the energy management system, which constantly polls the VAV boxes to determine the highest temperature supply air that can adequately cool the space with the greatest sensible load. Aside from the energy benefit, this warmer supply air temperature ensures that the supply airflow to each box is high enough to deliver the outdoor air needed by each space to satisfy the indoor air quality needs. It also reduces the risk of condensation forming on poorly insulated ductwork.

In contrast, the conventional system must expend additional energy to cool the combined outdoor and return airstream to 55°F (13°C) to achieve the desired space humidity control. The air must then be reheated before entering the zones to avoid over-cooling. Supply air through

Advertisement formerly in this space.

the ductwork remains near saturation with this approach.

Part Load Cooling Condition: 77°F/109 grains (25°C/15.6 g/kg)

At this part-load condition, there is less latent load (infiltration) and sensible load (heat gain and infiltration) within the occupied space. *Figure 3* shows the IADR system responds by delivering the preconditioned outdoor air at a slightly higher humidity level (45 grains [3 g]) than required at peak load conditions, while still maintaining the desired 55°F (13°C) space dew point. Less cooling capacity and regeneration energy is used by the IADR at this more frequent, part-load condition.

The supply air temperature leaving the main VAV air-handling unit is increased (to 66°F [19°C]) while the airflow is decreased, cutting the energy consumed in response to the reduction in the space sensible cooling load. The moderate outdoor temperature and humidity content increases both the operating efficiency and cooling output of the vapor compression cooling systems, especially where the variable speed compressor technology is used.

The conventional system sees a modest reduction in cooling input, but the leaving air temperature off the cooling coil must remain the same for dehumidification purposes. The parasitic reheat energy increases due to the lower space sensible load.

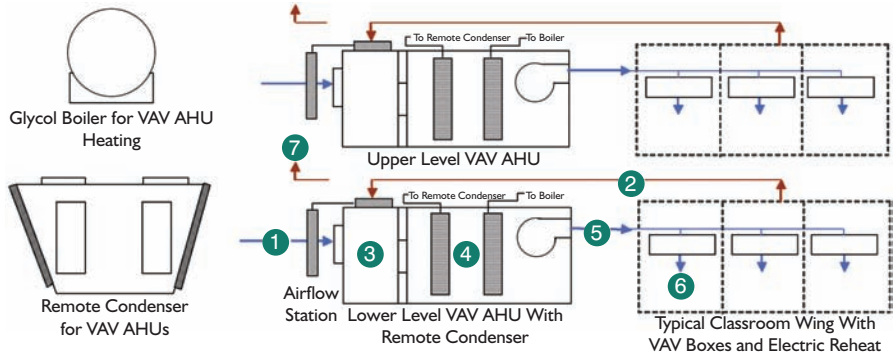

System State Point (Psychrometrics/Airflow)	Weather Conditions Evaluated 88°F/132 gr. (°F/grains)	77°F/109 gr. (°F/grains)	62°F/82 gr. (°F/grains)	34°F/24 gr. (°F/grains)
1 Outdoor Air	88°F/132 gr. 2,925 cfm	77°F/109 gr. 2,925 cfm	62°F/82 gr. 2,925 cfm	34°F/24 gr. 2,925 cfm
2 Return Air to AHU	75.2°F/68 gr. 6,225 cfm	75°F/67 gr. 4,810 cfm	72.1°F/66 gr. 2,905 cfm	70.7°F/38 gr. 1,311 cfm
3 Mixed Air to AHU Coils	79.3°F/89 gr. 9,150 cfm	75.8°F/83 gr. 7,735 cfm	67°F/74 gr. 5,830 cfm	45.4°F/28 gr. 4,236 cfm
4 Air to AHU Heating Coil	54°F/59 gr. 9,150 cfm	54°F/59 gr. 7,735 cfm	54°F/58 gr. 5,830 cfm	45.4°F/28 gr. 4,236 cfm
5 VAV AHU Supply Air	56°F/59 gr. 9,150 cfm	56°F/59 gr. 7,735 cfm	56°F/58 gr. 5,830 cfm	56°F/28 gr. 4,236 cfm
6 VAV Box Supply Air*	62°F/59 gr. 1,830 cfm	66°F/59 gr. 1,520 cfm	78.2°F/58 gr. 1,105 cfm	92°F/34 gr. 912 cfm
7 Relief Air	75.2°F/68 gr.	75°F/67 gr.	72.1°F/66 gr.	70.7°F/38 gr.

*Data presented reflects the airflow and psychrometric state points required to maintain space conditions comparable to the advanced system (*Figure 3*).

· These conditions reflects data collected during morning warm-up following night-setback, thermal storage of building mass evident in sensible load.

· To minimize reheat requirements, this analysis allows the space temperature to be maintained at 72°F rather than the goal of 75°F (same dew point used).

· Data shown for the AHU (points 7-11) serving the lower floor of the northern half of Wing A. The total wing is approximately 20,000 ft^2 and includes 18 classrooms.

Figure 5: Baseline design with conventional VAV AHU and no outdoor air preconditioning.*

Part Load Heating Condition: 62°F/82 grains (16.7°C/11.7 g/kg)

This data was collected during the common (yet frequently ignored) condition in which the outdoor air is cool, but its dew point is higher than desired. Conventional systems often attempt to use temperature-driven economizers at these conditions, but the end result is an uncomfortable, cold-clammy space.

Figure 3 shows how the advanced design approach accommodates these conditions. The outdoor air is both heated and dehumidified by the IADR to maintain the desired indoor conditions. This is particularly important during the morning warm-up cycle shown, which can be energy intensive, especially if electric reheat is used to heat up a large structure that has been allowed to cool during unoccupied periods. The advanced system consumes only a small fraction of the energy

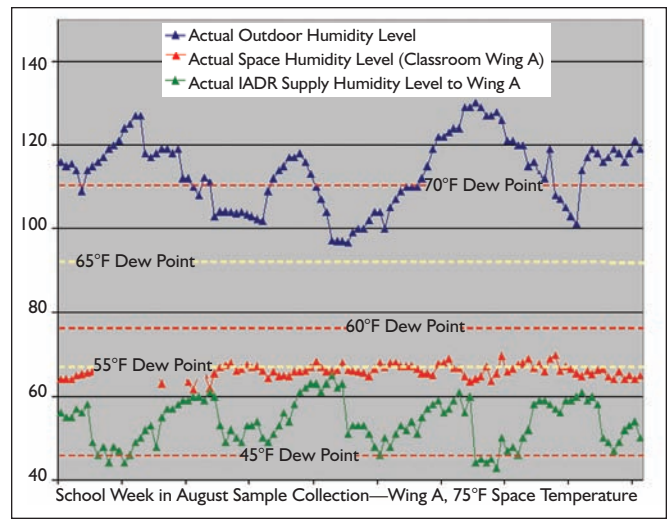

Figure 6: Actual humidity data recorded at peak condition.

Advanced Design: Actual Energy (kW) Consumed by Individual System Component*					
Outdoor Conditions		88°F/132 grains	77°F/109 grains	62°F/82 grains	34°F/24 grains
Total Recovery Module	Exhaust Fan‡	1.33	1.33	1.33	1.33
DOAS Hybrid System	Supply Fan	4.10	2.90	1.70	1.70
	Compressors	15.60	9.80	3.50	0.00
	Condenser Fans	2.10	1.50	1.10	0.00
	Regeneration Fan	0.24	0.24	0.24	0.24
	Regeneration Energy	121,517 Btu/h	106,060 Btu/h	117,000 Btu/h	000 Btu/h
VAV Air Handling Units	Supply Fans	13.4	9.4	4.80	2.4
	Compressors	13.3	5.5	3.30	13.5
	Condenser Fans	2.0	0.9	0.90	2.6
VAV Boxes§	Electric Reheat	0	0	0	16
Total Electrical Energy		**52.15 kW**	**31.57 kW**	**16.88 kW**	**37.73 kW**
Regeneration Energy§		121,517 Btu/h	106,060 Btu/h	117,000 Btu/h	000 Btu/h
Conventional Design: Modeled Energy (kW) Consumed by Individual System Component†					
VAV Air Handling Units	Supply Fans	20.20	13.60	6.20	2.6
	Condensing Units	80.20	56.3	25.30	0.0
	Exhaust Fans‡	0.48	0.48	0.48	0.5
	Hot Water Heat Coils‡	0.00	0.00	0.00	96,987 Btu/h
VAV Boxes§,**	Electric Reheat	8.70	17.13	81.89	96.50
Total Electrical Energy		**109.58 kW**	**87.51 kW**	**113.87 kW**	**99.56 kW**
Hot Water Heat Energy					96,987 Btu/h
Conventional Design: Modeled Energy (kW) Using Total Energy Recovery†					
Total Electrical Energy††		**83.26 kW**	**73.90 kW**	**111.97 kW**	**69.30 kW**
Hot Water Heat Energy					0 Btu/h

*Loads shown reflect actual measured data via Modbus communications and data trending.
†Loads shown reflect estimated energy consumed by conventional approach to satisfy the loads shown in *Figures 4* and *5*.
‡Fan energy shown includes the desiccant wheels drive motors for the advanced design, relief air only for the conventional design.
§Electric reheat energy monitored (advanced) or estimated (conventional) reflects a total of 18 boxes located in the A north upper and lower wing.
**Assumes maintaining the space temperature at 72°F as shown in *Figure 5* to minimize the amount of cooling season electric reheat
††Values shown above are for one upper and one lower level of the northern half of wing A, 18 classrooms approximately 21,000 ft^2.

Figure 7: Energy comparison: actual for advanced design vs. modeled conventional approach.

required by the conventional VAV approach at this condition, as highlighted by *Figure 7*.

Peak Heating Condition: 34°F/24 grains (1.1°C/3.4 g/kg)

At this condition, the advantage of a high-efficiency heat pump cycle becomes evident. The remote heat pump/condensing units designed for the Pepperell project use a generous outdoor air coil capacity along with the variable speed compressors and outdoor fans to produce approximately 11,800 Btu (12 450 kJ) of heating output per kW of electrical input at this 34°F (1°C) condition. This equates to approximately 3.5 times that produced through the use of the electric resistance heaters located in the individual VAV boxes.

To take full advantage of this opportunity, a custom controls algorithm was applied to deliver the warmest possible air from the VAV air-handling unit and IADR combination to each zone. Only when one critical zone begins to exceed the desired temperature range is this supply deck temperature reduced. The energy benefit offered by the advanced heat pump approach is particularly pronounced during morning warm-up. When electric reheat is used for this purpose, the electrical consumption and peak demand can be undesirably high.

The baseline conventional system and control algorithms use the hot water coil to preheat the supply air to 55°F (13°C) then reheat at the individual zones to control the heating season space temperature. If total recovery is not employed, the space relative humidity can become undesirably low, increasing the likelihood of infection with airborne bacteria or viruses.[7,8]

Energy Use Advantages

Figure 7 provides a summary of the energy actually consumed by the advanced design along with an estimate of the energy that would be consumed by the conventional design, shown with and without the addition of total energy recovery. This

Modbus 1 Supply Fan		Modbus 2 Compressor		Modbus 4 Outdoor Fan		Energy Summary (Heating Mode)	
Supply Fan Run Status	On	Compressor Run Status	On	Outdoor Fan Run Status	On	Supply Fan kW	4.1
Supply Fan Fault Stat	Off	Compressor Fault Stat	Off	Outdoor Fan Fault Status	Off	Compressor kW	6.7
Supply Fan Freq Ref	53.6	Compressor Freq Ref	50	Outdoor Fan Freq Ref	25.78	Outdoor Fan kW	0.5
Supply Fan Freq Out	53.6	Compressor Freq Out	50	Outdoor Fan Freq Out	25.78		
Supply Fan Amp	8.4	Compressor Amp	15.4	Outdoor Fan Amp	5.7		
Supply Fan kW	4.1	Compressor kW	6.7	Outdoor Fan kW	0.5		

Figure 8: Actual electrical consumption data provided by the IADR DDC system.

comparison highlights the reduction in energy consumption associated with the advanced design. It averages only 34% of the energy estimated for the conventional approach and 44% of the energy required by the conventional system with total recovery integration.

Most of this reduction in energy use comes from compressor load during the cooling season, and electric heating load during the heating season. The regeneration energy used by the IADR is low; less than $0.90/hour at the peak cooling state point. Although desiccant regeneration of the main classroom IADR units is accomplished using waste heat from the onsite natural gas driven engine generator (see sidebar *DOE Pilot System*), this economic benefit is not reflected in the analyses discussed in this article.

One of the most important contributions to this research investigation is the level of system performance data provided by the control/data acquisition system. Particularly useful is the energy-use monitoring provided by a Modbus communications network that reports the real-time electrical use of each individual component of the HVAC system as summarized in *Figure 7*. This information should be of interest to facility managers and design engineers because few facilities are instrumented, trended and analyzed after construction to see how the HVAC designs actually perform. For example, the executive director of facilities for the Floyd County School District was anxious to see the data resulting from this investigation so it could be used to guide the direction of future HVAC designs. *Figure 8* provides an example of the electrical consumption data as reported by the DDC system integrated into each IADR system.

Peak Electrical Demand Reduction

To estimate the reduction in peak electrical demand offered by the advanced system, the actual HVAC peak demand measured at the Pepperell project is compared against that estimated for the conventional system providing comparable performance. The peak cooling season electrical demand of the advanced approach is 49% of that estimated for the conventional approach.

Figure 9 shows the difference in peak electrical demand between the two HVAC system options. It also shows how the overall peak electrical demand is dominated by the HVAC system

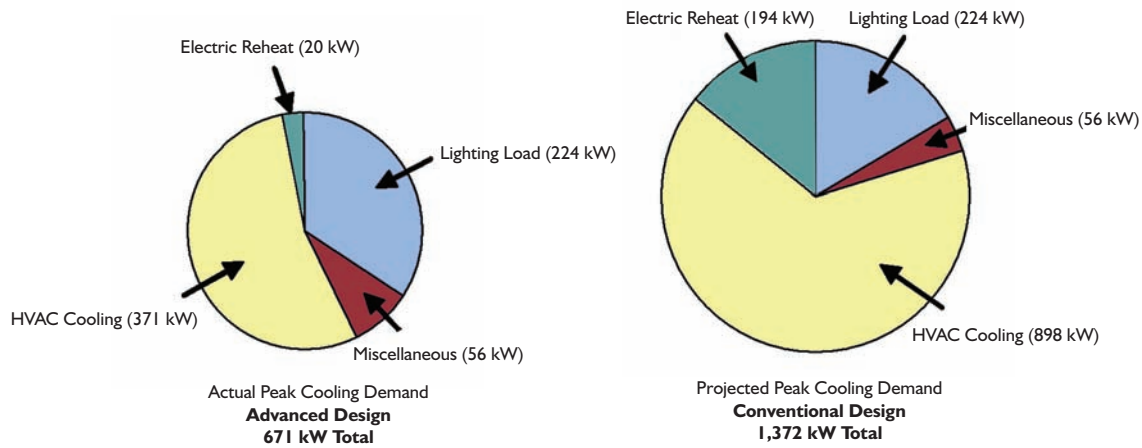

Actual peak demand for the month of August. School in full session based on early August start date; high-efficiency lighting is installed at the Pepperell site (1.125 W/ft^2) and this lighting efficiency was used for both designs; actual HVAC power consumption from trended Modbus data (part of the on-site instrumentation); conventional baseline system design as per *Figure 5* (does not include total energy recovery addition).

Figure 9: Energy comparison total school peak consumption.

when the conventional approach is used. This clearly conveys the fact that any desire to reduce energy use within a school facility must be accomplished by optimizing the HVAC design, especially if comfortable conditions are to be maintained and the building codes are to be followed.

Given the magnitude of peak energy reduction summarized by *Figure 9*, an attempt was made to obtain actual electrical demand data from a school designed and operated as modeled for the conventional design. A high school complex having a similar size and located in Rome, Ga., but operated by a different school district was identified. This school used vapor compression for cooling, a heat pump cycle for heating and electrical reheat as needed during the heating season operation. The school was designed to deliver approximately one-third of the outdoor air volume used for Pepperell High School. As importantly, no active humidity control was incorporated (i.e., no cooling season reheat).

Figure 10 shows the results of this comparison. The conventional peak demand projection made in *Figure 9* agrees well with the actual cooling season conventional data shown in *Figure 10* once adjusted to reflect the reduced outdoor airflow and lack of active humidity control or cooling season reheat energy use. The analysis also suggests that the advanced system can provide a significant reduction (44% and 47% for the cooling and heating seasons respectively) in peak HVAC electrical demand while simultaneously providing Standard 62-2001 ventilation and active humidity control.

Season	Peak kW (Total Facility)*		Peak kW (HVAC Only)†		HVAC Only Decrease
	Advanced	Conventional	Advanced	Conventional	
Cooling	671 kW	989 kW	391 kW	695 kW	44%
Heating	951 kW	1,554 kW	671 kW	1,260 kW	47%

*Actual measured total peak kW for both schools, conventional school normalized to same square footage as the Pepperell advanced design school.
†HVAC peak demand estimated by subtracting base lighting load and estimated miscellaneous load. Conventional school lighting is 6% less efficient.
· Both schools located within the same city in Georgia, both systems use heat pumps with backup resistance heat.
· Conventional design has one-third of the outdoor air as the advanced design and does not have active humidity control.

Figure 10: Actual peak demand comparison (advanced vs. conventional school).

System Approach	Cost/ft^2	Operating Cost/ft^2	Humidity Control
Individual Rooftop Only (No Recovery)	$9.68 to $12.11	Poor	Poor
Individual Rooftop and ERV	$11.72 to $14.56	Fair	Fair
WS Heat Pump and ERV	$10.64 to $15.13	Good	Good
WS Heat Pump and DOAS	$11.80 to $16.05	Very Good	Very Good
VAV with ERV Preconditioning	$9.86 to $19.50	Fair	Good
VAV with IADR Preconditioning	**$10.20 to $11.64**	**Lowest**	**Best**

Construction cost figures include all equipment, controls and equipment costs but do not reflect electrical credit for the more efficient systems. Cost are based on actual construction figures from approximately 14 projects, adjusted to 2005 dollars to reflect inflation. All other system cost estimates were checked against the R.S. Means data book for accuracy. The DOAS system is a dual wheel, total energy recovery system as per Reference 4. ERV is a single total energy wheel.

Figure 11: Summary of results from installed cost comparison.

DOE Pilot System

A natural gas-driven engine generator was installed at Pepperell High School in Georgia to power four IADR systems coupled with total recovery modules and operated as dedicated outdoor air units. This DOE-sponsored pilot system combines an electrical efficiency of 33.4% with a 37.2% thermal efficiency to provide a 70.5% overall system efficiency, far higher than the 45% efficiency typical of a commercial distribution grid. Heat recovered from the engine jacket is used to regenerate the active desiccant wheels during the cooling season and for heating the supply air during the winter months. As a result, peak electrical demand at the site is reduced by more than 100 kW. Cooling and heating season energy costs for the four IADR systems will be reduced by approximately 21% and 29% respectively based on an electric cost of $0.075/kWh and gas costing $0.75/therm. Neither the cost nor energy savings associated with the engine demonstration are reflected in this article.

Indoor Environmental Advantages

Trended data collected over the first full cooling season, and reflected by *Figure 3* proved the advanced system capable of maintaining the desired space dew point of 55°F (13°C) over a wide range of outdoor air conditions (*Figure 6*). As reported in an earlier ASHRAE Journal article,[4] lower space humidity produced comfort conditions at elevated space temperature setpoints (i.e., 75°F [24°C]).[4,5,15]

Indoor Air Quality (TVOC and CO_2 testing)

To benchmark the indoor air quality maintained within Pepperell High School, air quality samples were collected from all three main classroom areas using adsorbent-filled retention tubes and analyzed by Georgia Tech Research Institute. The results of this total volatile organic compound (TVOC) testing showed the air quality in the school to be excellent, averaging less than 200 µg/m^3, better than the best of those reported on in Reference 4. Similar results were found for CO_2 data collected at the site coincident with the TVOC testing.

LEED® and Outdoor Environmental Advantages

Although the construction budgeting priorities did not allow for formal LEED certification of Pepperell High School, an informal analysis completed by a LEED-accredited professional confirmed that the facility would have been eligible for approximately 43

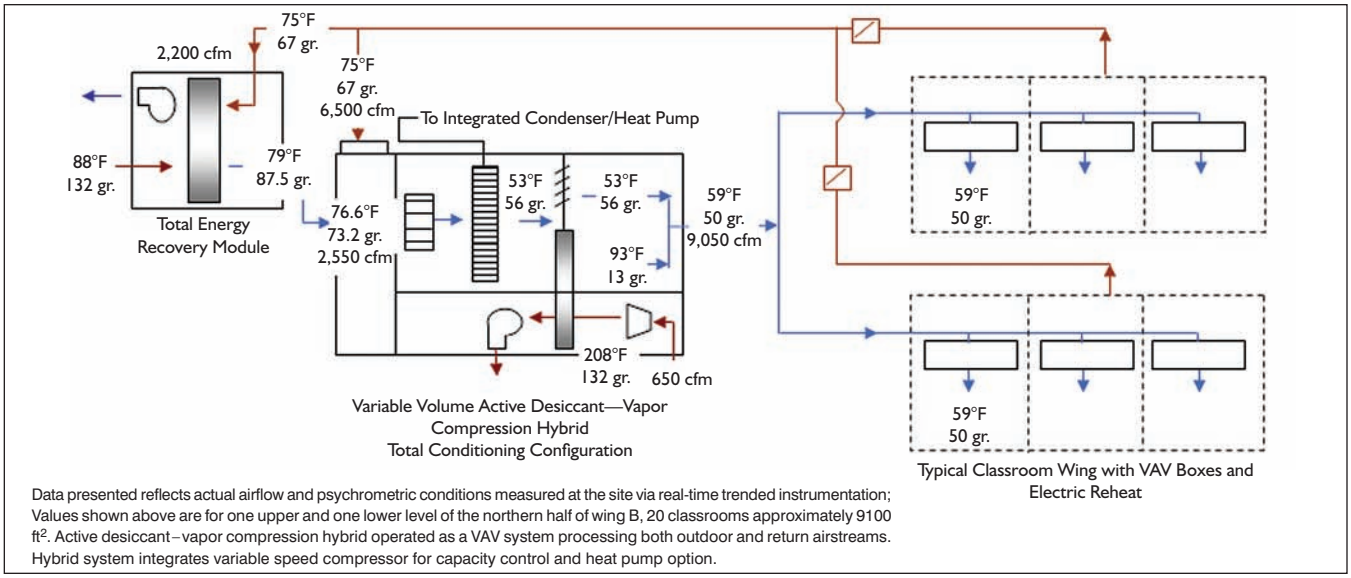

Figure 12: IADR operated as an integrated total conditioning system.

points, 23 of which provided by the HVAC system efficiency and ASHRAE compliance (only 26 total points are required for certification), qualifying the facility for a LEED Gold level rating.

An analysis of electrical use at the site was extended to look at carbon emissions since the local utility is powered by coal. The advanced design is projected to produce approximately 850 fewer tons (770 Mg) of carbon emissions annually than the conventional design.

Advertisement formerly in this space.

Had the conventional design used chilled water as opposed to a high-efficiency vapor compression approach, an estimated 5 million gallons of water would have been required by the cooling towers annually.

Background Classroom Noise

Another important factor in maintaining a desirable teaching environment is controlling background noise in classroom areas. Much industry controversy has surrounded a new ANSI standard (ANSI/ASA Standard S12.60-2002) requiring background noise levels to be maintained below 35 decibels. Many commonly used HVAC designs will not allow the background noise to approach this level. Testing was conducted in 10 representative Pepperell classrooms using a Brüel and Kjær sound meter reporting sound power levels as dBA. The average background noise level within the unoccupied rooms measured was 34.5 dBA. The maximum level measured was 39.5 dBA and the minimum was 29.7 dBA.

Maintenance Concerns

The advanced system introduces additional components. Some of which are unfamiliar to the maintenance staff, and the system complexity is increased over a more conventional system. However, important advantages are provided that may outweigh any initial concerns.

Advantages include the soft-start on all fans and most compressors, the elimination of belts on the IADR fans, the elimination of most condensate in the main AHUs, improved defrost cycles and full refrigeration monitoring with built-in safeties.

The most important maintenance benefit may be the comprehensive monitoring integrated into the control system. Automatic monitoring of the system alerts the service department when a system is not functioning correctly, is not achieving setpoint or in need of service or adjustment. Project history has shown that most problems can be addressed remotely or automatically. This remote monitoring is accessible to the IADR equipment manufacturer. If the service department has a question, the problem can be quickly addressed with the equipment supplier acting as a long-term partner. This has allowed for effective overall systems optimization during the commissioning process and beyond.

Since the equipment can be positioned outdoors, it is easily accessible, simplifying any maintenance function. This also resulted in architectural enhancements including freeing up several mechanical rooms for usable floor space.

Construction Cost Analysis

Few would argue that school facilities should be built and operated in accordance with ASHRAE recommendations and the building codes. They should be comfortable, free from humidity problems, microbial concerns and well ventilated. An inefficient school will remain so for the life of the structure, which is usually in excess of 30 years. Energy efficiency should be a top priority. The question is can all of these criteria be satisfied in a cost effective manner?

The mechanical construction cost for the advanced HVAC design applied to the Pepperell project totaled $11.64/ft^2. This project cost includes an unusually high level of controls, programming and instrumentation, customized remote heat pump condensing units and other premium components.

Figure 11 summarizes the installed construction cost estimate for various more conventional systems commonly used for school facilities. This analysis shows the advanced approach to be surprisingly competitive with other design schemes that are less efficient and do not actively control humidity. Designers will have to complete their own analyses to determine actual costs for any given project but the results of this analysis provide solid support for considering the advanced system for school facilities.

Smaller Schools or Zones

Smaller schools or zones, like the B wing classroom areas of this Pepperell site can be designed with the IADR system operated to process all of the systems airflow needs and operated as a VAV system. In this way, the system integrates the dedicated outdoor air system and the main VAV system into a single system. *Figure 12* shows actual performance data

Advertisement formerly in this space.

from the B Wing IADR system during the peak cooling mode.

This same total conditioning approach was applied to serve the Pepperell band and choral area, the auditorium, the gymnasium and the cafeteria. This design option is well suited to retrofitting existing school facilities since existing packaged equipment can be easily replaced using a custom curb adapter. Retrofit IADR systems have since been installed in this manner at two additional Floyd County schools.

Conclusions and Recommendations

The advanced design approach detailed in this article suggests an effective roadmap for constructing and operating comfortable, healthy, energy-efficient and cost-effective schools that follow current ASHRAE recommendations and meet all code requirements.

Decoupling the latent load from the main VAV system, applying a dedicated outdoor air system with low dew-point capabilities, using high-efficiency vapor compression—heat pump systems and advanced control algorithms showed measurable improvements when compared to a conventional baseline system. Based upon analyses completed, the required cooling capacity was reduced by 44% (475 tons versus 850 tons [1670 kW versus 2990 kW]), cooling season peak demand was cut by approximately 51% (671 kW vs. 1,372 kW) and annual energy costs were reduced by an estimated 43% ($0.73/ft^2 vs. $1.28/ft^2) when compared to the baseline system operated without total energy recovery preconditioning.

The mechanical equipment and installation was found to be cost competitive with more conventional designs that consume more energy and are less capable of controlling space humidity. The operating cost of the Pepperell High School is low compared to more conventional systems. The 20-year life-cycle analysis comparing the advanced and baseline system was completed using the ASHRAE-recommended procedure and assumed a 2% annual increase in energy cost from the current levels of $0.055/kWh and $0.75/therm. The analysis projected $2,647,000 in energy savings over 20 years with the advanced approach and a net cash present value of $1,054,000.

Less quantifiable benefits include increased performance and reduced absenteeism associated with improved indoor air quality, more state funding resulting from higher attendance and a reduction in costs associated with poor humidity control.

References

1. ANSI/ASHRAE Standard 62-2001, *Ventilation for Acceptable Indoor Air Quality.*
2. ANSI/ASHRAE/IESNA Standard 90.1-1999, *Energy Standard for Buildings Except Low-Rise Residential Buildings.*
3. ANSI/ASHRAE Standard 55-1992, *Thermal Environmental Conditions for Human Occupancy.*
4. Fischer, J. and C.W. Bayer. 2003. "Report card on humidity control." *ASHRAE Journal* 45(5):30–37.
5. Fischer, J. and J.R. Sand. 2005. "Field Test and Performance Verification: Integrated Active Desiccant Rooftop Hybrid System Installed in a School." Oak Ridge National Laboratories, ORNL/Sub-01-4000025209.
6. Bayer, C.W., et al. 2002. "The relationship between humidity and indoor air quality in schools." *Proceedings of Indoor Air 2002*, International Academy of Indoor Air Sciences II:818–823.
7. Fischer, J., 1996. "Optimizing IAQ, humidity control, and energy efficiency in school environments through the application of desiccant-based total energy recovery systems." *Proceedings of ASHRAE IAQ '96* pp. 188–203. Atlanta: ASHRAE.
8. Bayer, C.W., S.A. Crow and J.C. Fischer. 2000. "Causes of Indoor Air Quality Problems in Schools: Summary of Scientific Research." Oak Ridge National Laboratories, ORNL/Sub/94-SV044/1.
9. Bayer, C.W. and C.C. Downing. 1992 "Indoor conditions in schools with insufficient humidity control." *Proceedings of IAQ '92.* Atlanta: ASHRAE.
10. Downing, C. and C.W. Bayer. 1993. "Classroom indoor air quality versus ventilation rate." *ASHRAE Transactions* 99:1099–1103.
11. Sand, J.R. and J. Fischer. 2006. Air Conditioning and Heat Pump Efficiencies—How Efficient Can We Make It. Oak Ridge, Tenn.: Oak Ridge National Laboratories.
12. Petrov, AY., et al. 2005. "Performance analysis of integrated active desiccant rooftop air-conditioning system operating in heating mode." *Proceedings of IMECE-2005.*
13. Petrov, A.Y., J.R. Sand J.R. and J. Fischer. 2006, "SEMCO Integrated Active Desiccant Rooftop's Low Dew Point Capabilities." Oak Ridge, Tenn.: Oak Ridge National Laboratories.
14. Kats, G. 2006. "Greening America's Schools—Costs and Benefits." A Capital E Report. www.cap-e.com/ewebeditpro/items/O59F9819.pdf.
15. Berglund, L. 1998. "Comfort and humidity." ASHRAE Journal 40(8):35–41.
16. Mumma, S. 2001. "Designing dedicated outdoor air systems." *ASHRAE Journal* 43(5):28–31.
17. *2001 ASHRAE Handbook—Fundamentals.*
18. Henderson, H. and K. Rengarajan. 1996. "A model to predict the latent capacity of air conditioners and heat pumps at part-load conditions with constant fan operation." *ASHRAE Transactions* 102(1):266–72.
19. Khattar, M., N. Ramanan and M. Swami. 1985. "Fan cycling effects on air conditioner moisture removal performance in warm, humid climates." International Symposium on Moisture and Humidity.

Advertisement formerly in this space.

Acknowledgments

The authors acknowledge contribution made by the Environmental Monitoring Branch of the Georgia Tech Research Institute who provided IAQ air sample analyses and comments for this article.