Feasibility Study of Using Ground Source Heat Pumps at the Sullivan Elementary School, Yokosuka, Japan

Piljae Im
John Shonder
Oak Ridge National Laboratory

I. EXECUTIVE SUMMARY

The objective of the work described in this report was to determine the feasibility of converting heating and cooling equipment at Sullivan's School in Yokosuka, Japan to water source heat pumps that absorb heat from and reject heat to Recreation Bay, which is a small body of ocean water in contact with Tokyo Bay. Accordingly, an eQuest simulation model of the building and its existing HVAC equipment was developed based on as-built drawings and photographs of the site. After calibrating the model using several years of utility billing data, the HVAC equipment was changed to water source heat pumps that incorporated a "lake loop" heat exchanger model. Both models were driven with typical-year weather for Tokyo, Japan. The annual energy use of the model with water-source heat pumps was subtracted from the annual energy use of the model with the existing HVAC equipment to determine the annual energy savings.

Based on the simulation results, it is estimated that the annual energy savings of converting the school to water source heat pumps would be about 6,000 MMBTU. Given current utility rates, we estimate the annual cost savings to be about $221,000 per year. There would undoubtedly be savings in maintenance costs as well, though we did not attempt to quantify these.

Estimating the simple payback of the conversion is difficult because little is known about the cost of ground source heat pump projects in Japan. Very few systems have been installed there, and there is no published information on costs. Based on the cost of US vertical bore ground source heat pump projects, we estimate the project would have a simple payback of 15 years. On the one hand, the cost of a system with ocean heat exchangers would be lower than the cost of a similarly sized system with vertical bore ground heat exchangers. On the other hand, costs in Japan are expected to be higher due to the smaller market and the likely need to import some equipment. Thus the actual simple payback could be as short as 7.5 years, or as long as 22.5 years depending on the installed cost. The recommended next step for this work is to develop a better estimate of the installation cost of the water source heat pumps, heat exchanger, piping, pumps and associated equipment.

II. BACKGROUND AND BASE CASE

A. Background on Sullivan's School, Yokosuka, Japan

Building and System Description

Sullivan's School is located on the grounds of the US Naval facility known as Commander, Fleet Activities Yokosuka, Japan (CFAY). It serves 1,500 students from military families in grades K-5.

As shown in Figure 1, the school is composed of a complex of three main buildings (i.e., Bldg 1292, 3858 and 3859), which are connected to each other.

Building 1292, in the middle of the complex, is the main building, and most of its space is dedicated to classrooms. The building also contains a cafeteria and food preparation area. The total floor area is about 94,000 square feet. The classrooms have window units (See Figure 2) which provide cooling for the space. Other areas are served by fan coil units. The building is provided with steam heating, which is transmitted from a central plant.

Building 3858 is a partial two story building and is comprised of a multipurpose room (or gymnasium), art rooms, and offices. The total floor area is about 27,800 square feet. The majority of the building is served by fan coil units, and the rest of the building is equipped with two package air conditioners, an electric heater, and an air handling unit (AHU). An absorption chiller which also uses district steam provides the chilled water (CHW) for fan coil units and an AHU.

Building 3859 is a two story building and is comprised of administration offices and classrooms. The total floor area is about 61,000 square feet. As in building 3858, the majority of the building is served by fan coil units, and the rest is equipped with a package air conditioner, and three air handling units. An absorption chiller supplied by district steam provides chilled water (CHW) for fan coil units and AHUs.

B. Baseline Simulation Model for Three Buildings (Building 1292, 3858, and 3859)

In order to assess the feasibility of GSHP system applications for the candidate buildings, a building simulation model was developed using an hourly building energy simulation program, eQuest version 3.6. As the initial step, a simulation model was developed using as-built drawings, historical utility bills, and photographs taken at the site. Since the school is comprised of three buildings, and there are separate utility bills available (i.e., bills for building 3859[1] and

[1] Utility bills for the building 3859 is actually the combined bills of the building 3859 and 3860. Since the building 3860 is the parking garage, the energy consumption from this building was considered trivial and ignored in this study.

combined bills for building 1292 + 3858), three individual simulation models were developed. Figure 3 through 5 are representations of the 1292, 3858, and 2859 building models, produced using eQuest's graphical output. Most of the unidentified simulation inputs were defined as the default values for the elementary school building type. The simulation used the TMY2 weather file for Tokyo, Japan.

After the initial model was developed, the simulation result was calibrated to match the average utility billing data. The annual steam use data was converted from the kg of steam to MMBtu using a conversion factor used in EPA Target Finder <http://www.energystar.gov/ia/business/tools_resources/target_finder/help/Energy_Units_Conversion_Table.htm>.[2] Table 1 presents the historical utility bills (i.e., from FY 2002 to 2008) for the three buildings. The calibrated as-built simulation results are shown in Figure 6 through 8. In these figures, the gas consumption can be translated as steam use (MMBtu) at the building (i.e., with no consideration for transmission loss and boiler system efficiency). For the annual energy cost savings and simple payback calculation shown later in this report, 50% of efficiency for the transmission loss and boiler efficiency was assumed.

Figures 9 and 10 show the historical utility bills, the average electric and natural gas use over 6 years, and the simulation results. For the comparison, the simulation results for buildings 1292 and 3858 were combined, since the utility bills for those two buildings were combined. As seen in the Figures, the simulation results match relatively closely with the average utility bills. The differences between the average use and the simulated use may be caused by the different weather conditions, assumptions about the equipment and construction materials, etc.

III. USE OF GROUND SOURCE HEAT PUMPS

A. Application of a GSHP System

A possible option as a GSHP system application for the candidate buildings is the use of Recreation Bay as heat sink or source for a water source heat pump system. As shown in Figure 1, the buildings are located close to Recreation Bay (i.e., approximately 500 ft from building 1292). According to a study (Guo and Yanagi, 1996), the year around average temperature for Tokyo bay is about 61 ºF, which would provide an effective heat source/sink for a water source heat pump system. Table 2 presents the seasonal temperature changes in Tokyo Bay.

The current version of eQuest (version 3.6) has the capability to simulate a Lake/Well type of ground source heat exchanger, and this function was used to evaluate the energy savings potential of replacing the current systems in the buildings with GSHP systems. Since buildings 3858 and 3859 use absorption chillers to provide chilled water currently, a new water-to-water

[2] According to EPA Target Finder, 1 lbs of district steam is equivalent to 1.079 kBtu

heat pump system was proposed to replace the absorption chillers (See Figure 11), while water-to-air heat pump systems were proposed for the building 1292 to replace the existing window units. Since GSHP systems replace the current steam operating systems, the simulation assumes that there would be new natural gas fired hot water heaters installed in the three buildings.

Energy Simulation with GSHP System

Figures 12 through 14 show the GSHP system simulation results for three candidate buildings. Also, Table 3 presents the summary of energy and cost savings. For the cost savings calculation, non DOD electricity rate and natural gas rate provided from the school district was used[3]. As shown, the annual energy and cost savings for building 1292 were 3,160 MMBtu (i.e., 43.06% saving) and $123,203, respectively. The annual energy and cost savings for building 3858 were 1,789 MMBtu (i.e., 63.7% saving) and $63,148, respectively. For building 3859, the annual energy and cost savings were 1,012 MMBtu (i.e., 30.25% saving) and $34,490, respectively. Thus the total estimated annual energy and cost savings for the school are 5,906 MMBtu (44.18% saving) and $220,841, respectively.

It is important to note that in order to calculate the cost savings of reduced steam use, we used the estimate cost of the natural gas required to produce the steam at the boiler plant, assuming a 50% overall efficiency of production and delivery. The utility rates provided to us indicate that the price for natural gas is $33.12 per MBTU, while the cost for steam is $22.79 per MBTU. If these prices are correct, then the base is not recovering the full cost of steam production. If natural gas truly costs $33.12 per MBTU, then the cost to deliver 1 MBTU of steam is $33.12 divided by the overall efficiency of the plant and distribution system. We chose an efficiency of 50% based on experience with steam systems at other military facilities.

B. Estimate of Simple Payback

Initial Investment Cost

For the estimation of simple payback, first, the initial investment cost was required. Since there was no information available to us on current average GSHP installation costs in Japan, the U.S. average GSHP system installation cost information used in previous studies are used in this study. The calculated total initial cost was then increased/decreased by 50% to determine a range of uncertainty for the simple payback. In addition, appendix A provides manufacturer's cost information for a prefabricated geothermal lake heat exchanger system (i.e., Slim Jim System) for future reference. This information can be used to estimate more precisely the total installation

[3] Since non DOD natural gas rate is not provided, the steam non DOD rate (i.e., $ 37.01/MBtu) was used for the calculation.

cost associated with labor and water source heat pumps in Japan when the project is at a later stage of development.

As mentioned above, the initial installation cost for the selected GSHP system was estimated based on the survey results from the existing GSHP systems at Department of Defense facilities. This survey found that the average project cost per ton of installed capacity in the U.S. is about $6,951.5/ton, which represents primarily ground source heat pumps that use vertical bore heat exchangers. In general we would expect the cost of a system using Slim Jim type heat exchangers to be lower than this, but on the other hand we would also expect installation and equipment costs to be higher in Japan due to the relatively small domestic market for such equipment and systems.

In addition to the cost of the water source heat pumps, pumps, piping and heat exchangers, the project includes an additional cost for the installation of new natural gas service water heaters. In order to estimate the required storage size of water heaters for the building, the method from the ASHRAE Application Handbook was used. For about 1,500 students in an elementary school, the estimated storage size of the water heater would be about 3,200 gal. Considering the total floor area for each building, it was assumed that buildings 1292, 3858, and 3859 would receive 1,600, 500 and 1,100 gallon water heaters, respectively. The installation cost for a 100 gallon commercial water heater was assumed to be $6,000 based on the data from 2008 RS Means and other web sources. Therefore, the initial investment cost for each building can be estimated as following:

<u>Building 1292</u>

Initial installation cost for GSHP: 6,951.5 x 250 (ton) = $1,737,875
Initial installation cost for natural gas Water Heaters: 6,000 ($/100 gal) x 16 = $96,000
Total initial cost: $1,833,875

<u>Building 3858</u>

Initial installation cost for GSHP: 6,951.5 x 70 (ton) = $486,605
Initial installation cost for natural gas Water Heaters: 6,000 ($/100 gal) x 5 = $30,000
Total initial cost: $516,605

<u>Building 3859</u>

Initial installation cost for GSHP: 6,951.5 x 130 (ton) = $903,695
Initial installation cost for natural gas Water Heaters: 6,000 ($/100 gal) x 11 = $66,000

Total initial cost: $969,695

<u>Estimated Total Initial Cost for Project:</u> $3,320,175

<u>Simple Payback</u>

Since the initial cost was estimated based on the U.S. average installation costs, a parametric analysis was performed for various scenarios. The results are shown in Table 5. As shown, using the U.S. average installation cost for vertical bore systems of $7,000/ton, the simple payback was calculated as 15 years. The cost to install Slim Jim-type heat exchangers in Recreation Bay is expected to be lower than the cost of installing vertical bore heat exchangers, but due to the lack of information about the Japanese market, the cost reduction is not known. On the other hand, costs to install any type of ground source heat pump equipment in Japan is expected to be higher than in the US market due to the small number of projects installed. If the cost to install the system is as low as $3500 per ton, the simple payback could be as low as 7.5 years. On the other hand, if the cost to install the system is as high as $14,000 per ton, the simple payback could be as long as 22 years. Without further information on costs in the Japanese market, the actual simple payback cannot be estimated with any accuracy.

IV. CONCLUSIONS AND RECOMMENDATIONS

Based on this study, the use of water-source heat pumps at Sullivan's School seems to offer significant energy and cost savings for the Navy. We estimate that the project can save 5,906 MMBtu/yr resulting in annual cost savings of at least $220,841.

The lack of information about the cost of ground source heat pump project in Japan makes it difficult to estimate the simple payback. Using the cost of vertical bore heat pump retrofit projects at US military installations, we would estimate a simple payback of about 15 years. The cost of a lake loop system in the US would certainly be lower than this, but on the other hand the costs of all system types are expected to be higher in Japan than in the US. Due to this uncertainty we believe the simple payback could be as short as 7.5 years or as long as 22 year.

Due to the uncertainty in estimating the simple payback, we recommend that the next step for this work should be to develop a better estimate of the cost of the systems that would be installed, including heat pumps, heat exchanger, pumps, piping and associated equipment. Performed in conjunction with a preliminary design of the system, the cost estimate will provide the information required for the Navy to make a funding request for design completion and equipment installation.

Figure 1: Sullivan Elementary School Building

Figure 2: Window Unit for a Classroom in Building 1292

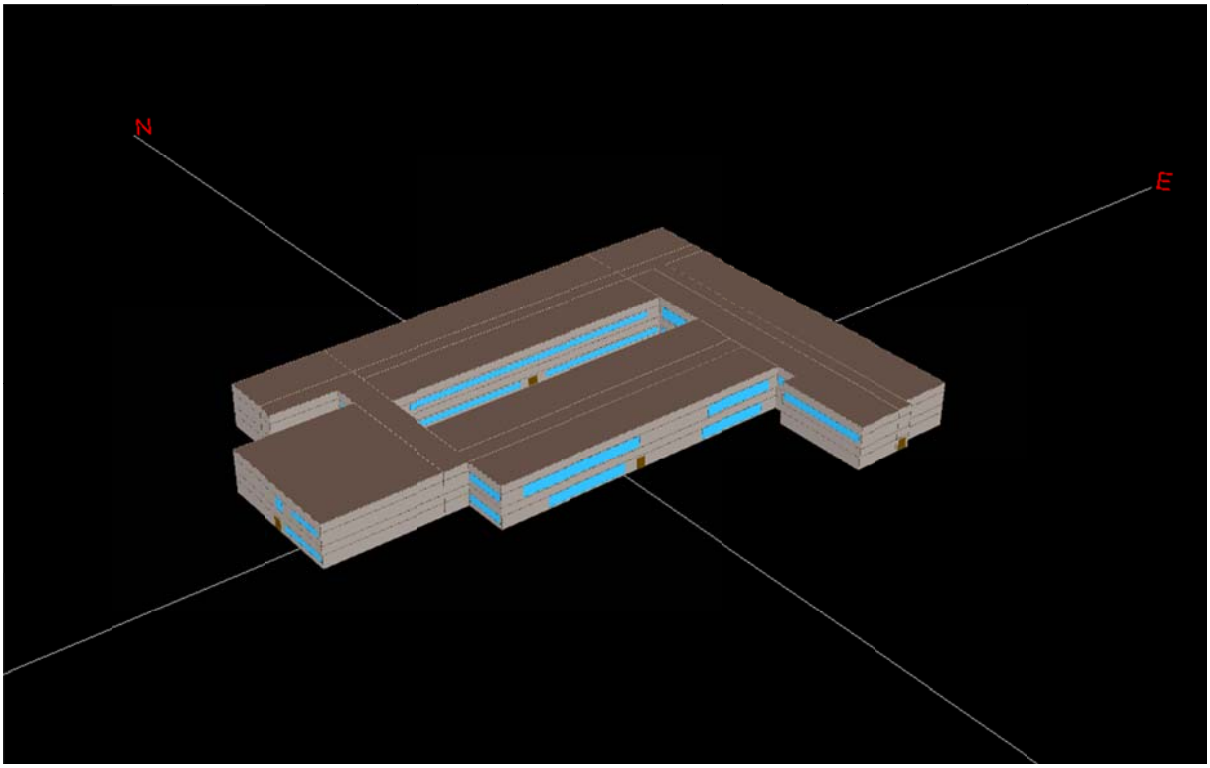

Figure 3: Building 1292 (eQuest Model)

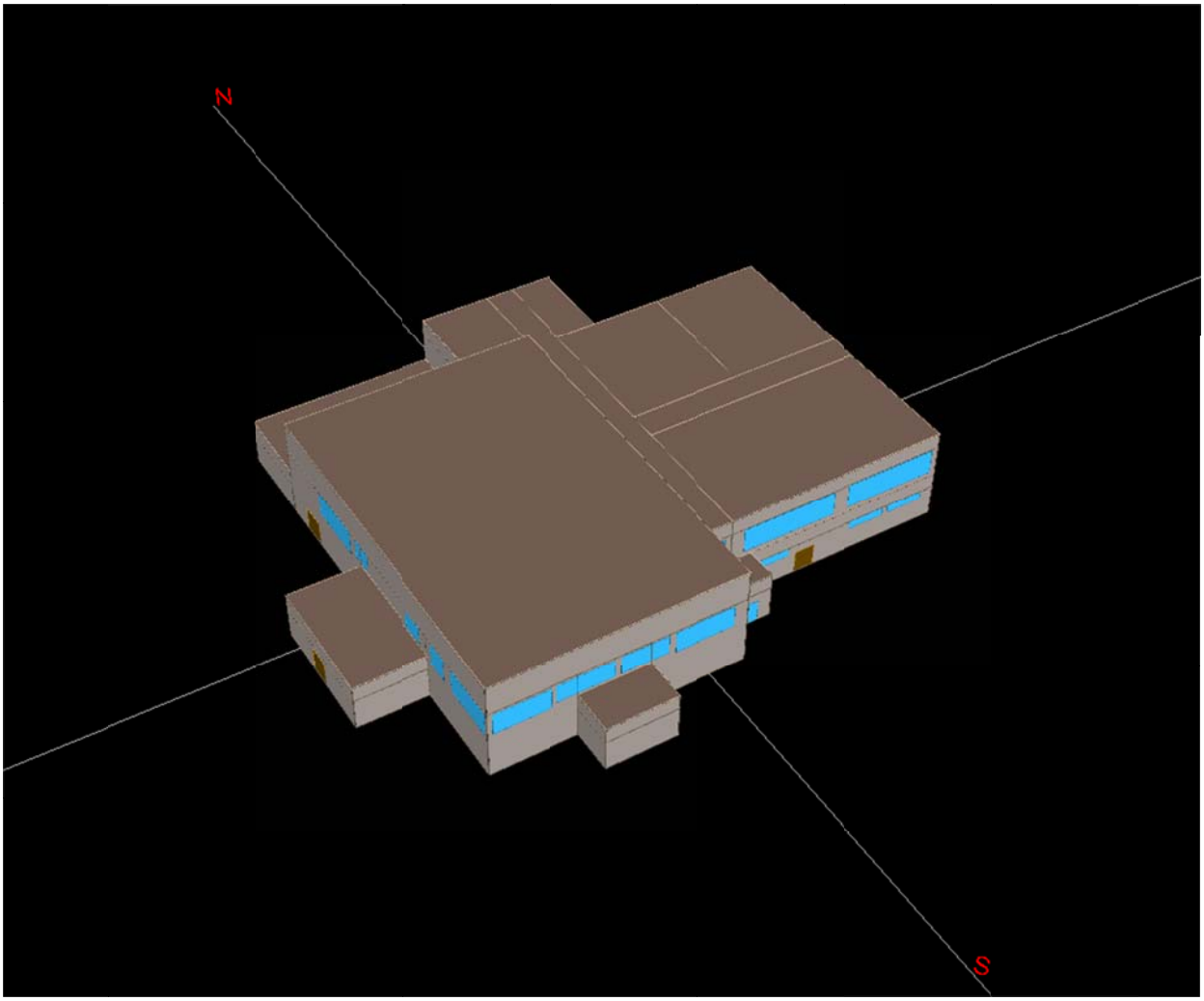

Figure 4: Building 3858 (eQuest Model)

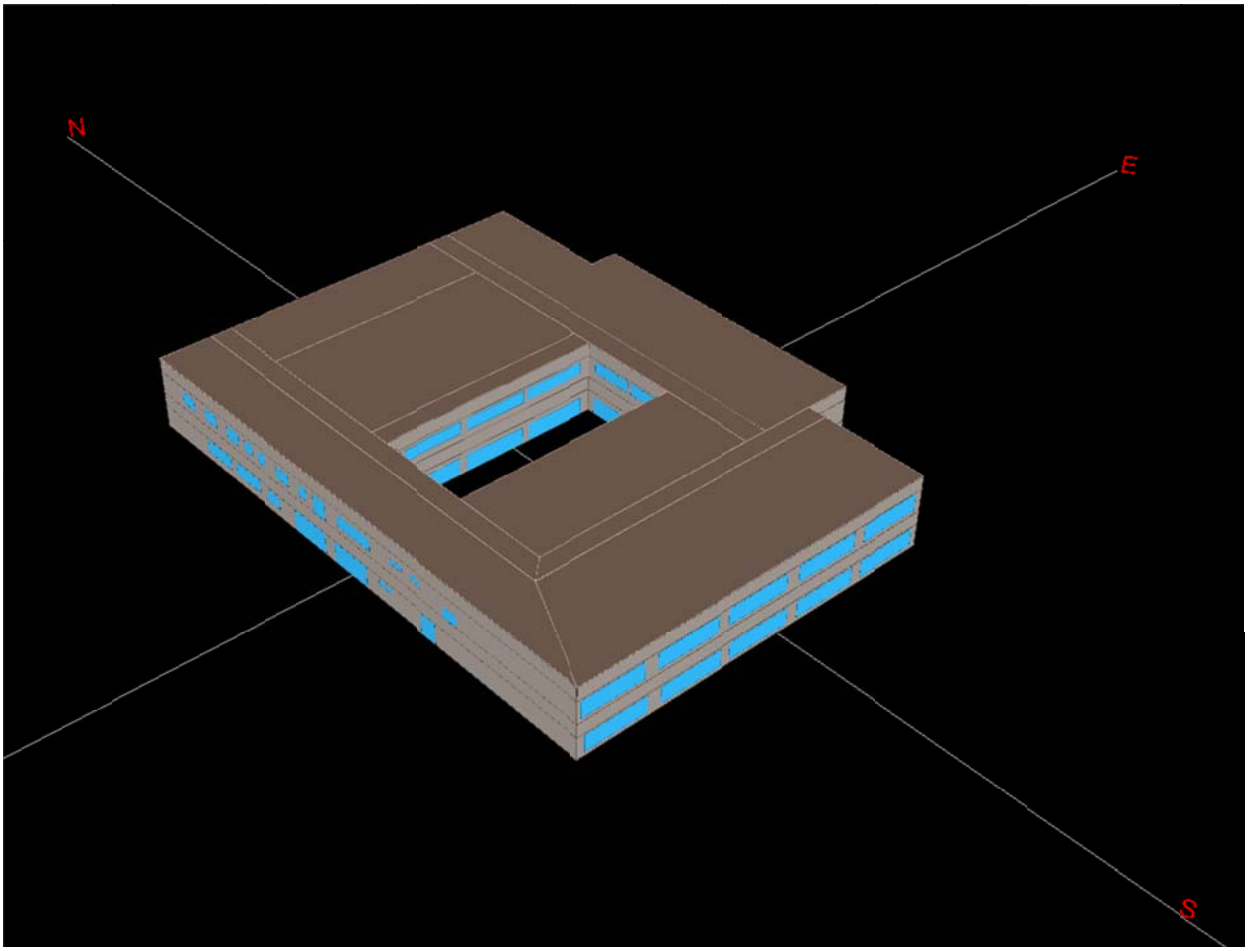

Figure 5: Building 3859 (eQuest Model)

Fiscal Year	Bldg	Electricity		Steam		
		Meter #	Consumption (kWh)	Meter #	Consumption (kg)	Consumption (MMBtu) at Building
FY 2002	3859	091639	546,370	18-6531Z	252,500	601
FY 2003	3859	091639	599,130	18-6531Z	313,000	745
FY 2004	3859	091639	569,350	18-6531Z	298,900	711
FY 2005	3859	091639	601,800	18-6531Z	287,620	684
FY 2006	3859	091639	607,400	18-6531Z	255,880	609
FY 2007	3859	091639	638,230	18-6531Z	303,100	721
FY 2008	3859	091639	783,470	18-6531Z	325,500	774
Average	**3859**	**091639**	**620,821**	**18-6531Z**	**290,929**	**692**
FY 2002	1292+3858	091638	1,174,430	C10-6369 FN	803,500	1,911
FY 2003	1292+3858	091638	1,299,100	C10-6369 FN	1,346,100	3,202
FY 2004	1292+3858	091638	1,324,300	C10-6369 FN	831,500	1,978
FY 2005	1292+3858	091638	1,390,520	C10-6369 FN	954,030	2,269
FY 2006	1292+3858	091638	1,410,930	C10-6369 FN	1,251,500	2,977
FY 2007	1292+3858	091638	1,460,270	C10-6369 FN	787,000	1,872
FY 2008	1292+3858	091638	1,779,220	C10-6369 FN	842,800	2,005
Average	**1292+3859**	**091638**	**1,405,539**	**C10-6369 FN**	**973,776**	**2,316**

Table 1: Historical Annual Energy Consumption (Electricity and Steam)

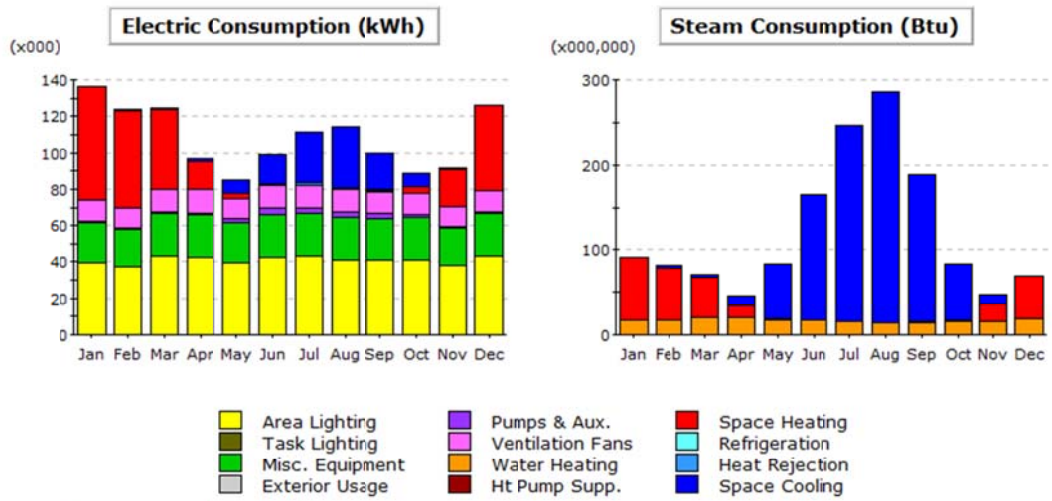

Electric Consumption (kWh x000)

	Jan	Feb	Mar	Apr	May	Jun	Jul	Aug	Sep	Oct	Nov	Dec	Total
Space Cool	-	0.3	0.2	1.2	6.8	16.3	27.8	33.8	20.4	7.3	1.2	-	115.4
Heat Reject.	-	-	-	0.0	0.1	0.4	1.0	1.1	0.6	0.1	0.0	-	3.3
Refrigeration	-	-	-	-	-	-	-	-	-	-	-	-	-
Space Heat	62.2	53.4	44.4	15.7	3.0	0.3	0.0	-	0.4	3.5	20.2	47.0	250.1
HP Supp.	-	-	-	-	-	-	-	-	-	-	-	-	-
Hot Water	-	-	-	-	-	-	-	-	-	-	-	-	-
Vent. Fans	11.3	10.9	12.3	12.6	11.5	12.6	12.6	12.0	12.0	12.0	10.9	11.8	142.5
Pumps & Aux.	0.8	0.8	0.8	0.7	1.8	3.0	3.0	3.4	2.8	1.6	0.8	0.7	20.3
Ext. Usage	-	-	-	-	-	-	-	-	-	-	-	-	-
Misc. Equip.	22.1	20.7	23.8	23.6	22.1	23.6	23.8	22.9	22.7	22.9	21.1	23.8	273.0
Task Lights	-	-	-	-	-	-	-	-	-	-	-	-	-
Area Lights	39.6	37.3	42.9	42.7	39.6	42.7	42.9	41.3	41.1	41.3	37.8	42.9	492.3
Total	136.0	123.5	124.4	96.6	84.8	98.8	111.1	114.6	100.1	88.7	91.9	126.2	1,296.8

Gas Consumption (Btu x000,000)

	Jan	Feb	Mar	Apr	May	Jun	Jul	Aug	Sep	Oct	Nov	Dec	Total
Space Cool	-	2.9	2.0	11.8	64.4	148.0	229.6	270.4	173.1	65.4	10.0	-	977.7
Heat Reject.	-	-	-	-	-	-	-	-	-	-	-	-	-
Refrigeration	-	-	-	-	-	-	-	-	-	-	-	-	-
Space Heat	73.3	60.3	47.8	13.8	2.1	0.2	-	-	0.2	2.4	21.6	50.9	272.7
HP Supp.	-	-	-	-	-	-	-	-	-	-	-	-	-
Hot Water	18.0	17.6	20.4	20.0	17.2	17.4	16.3	14.9	14.8	15.4	15.0	18.5	205.5
Vent. Fans	-	-	-	-	-	-	-	-	-	-	-	-	-
Pumps & Aux.	-	-	-	-	-	-	-	-	-	-	-	-	-
Ext. Usage	-	-	-	-	-	-	-	-	-	-	-	-	-
Misc. Equip.	-	-	-	-	-	-	-	-	-	-	-	-	-
Task Lights	-	-	-	-	-	-	-	-	-	-	-	-	-
Area Lights	-	-	-	-	-	-	-	-	-	-	-	-	-
Total	91.3	80.9	70.2	45.6	83.7	165.6	245.9	285.3	188.2	83.3	46.6	69.4	1,455.8

Figure 6: As Built Simulated Energy Consumption for Building 1292 (Steam Consumption at Building)

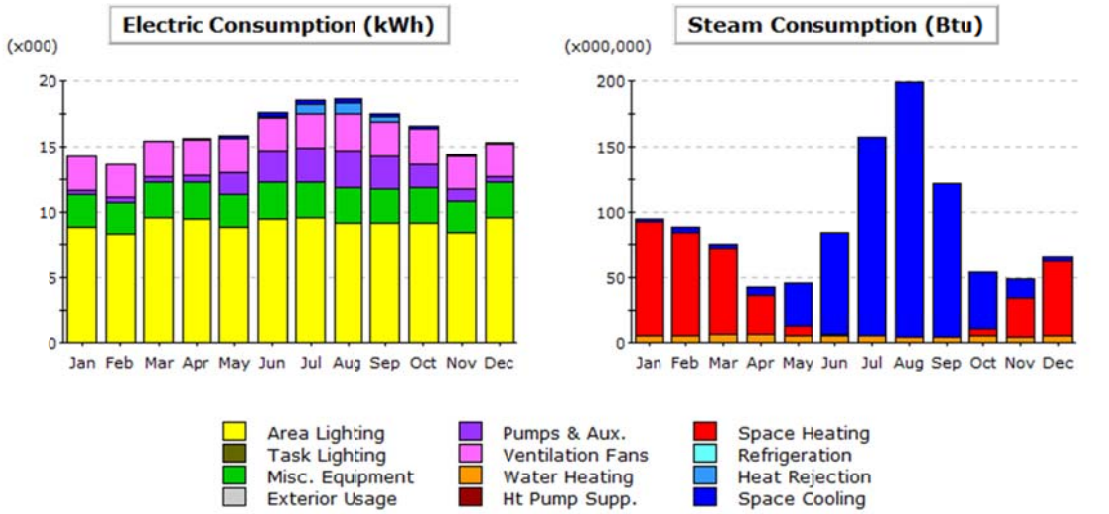

Electric Consumption (kWh x000)

	Jan	Feb	Mar	Apr	May	Jun	Jul	Aug	Sep	Oct	Nov	Dec	Total
Space Cool	0.01	0.02	0.02	0.03	0.17	0.26	0.27	0.30	0.27	0.19	0.09	0.02	1.66
Heat Reject.	-	-	-	-	0.02	0.13	0.70	0.86	0.40	0.03	-	-	2.13
Refrigeration	-	-	-	-	-	-	-	-	-	-	-	-	-
Space Heat	-	-	-	-	-	-	-	-	-	-	-	-	-
HP Supp.	-	-	-	-	-	-	-	-	-	-	-	-	-
Hot Water	-	-	-	-	-	-	-	-	-	-	-	-	-
Vent. Fans	2.56	2.52	2.71	2.77	2.65	2.56	2.65	2.78	2.55	2.66	2.52	2.53	31.45
Pumps & Aux.	0.28	0.40	0.36	0.52	1.61	2.39	2.57	2.84	2.52	1.83	0.94	0.39	16.66
Ext. Usage	-	-	-	-	-	-	-	-	-	-	-	-	-
Misc. Equip.	2.56	2.42	2.78	2.76	2.56	2.76	2.78	2.67	2.66	2.67	2.44	2.78	31.85
Task Lights	-	-	-	-	-	-	-	-	-	-	-	-	-
Area Lights	8.78	8.28	9.52	9.47	8.78	9.47	9.52	9.15	9.11	9.15	8.37	9.52	109.13
Total	14.20	13.63	15.38	15.56	15.79	17.57	18.49	18.61	17.50	16.54	14.37	15.25	192.88

Gas Consumption (Btu x000,000)

	Jan	Feb	Mar	Apr	May	Jun	Jul	Aug	Sep	Oct	Nov	Dec	Total
Space Cool	1.3	3.8	2.5	6.1	33.9	77.8	151.7	194.5	116.5	44.5	14.8	3.4	650.7
Heat Reject.	-	-	-	-	-	-	-	-	-	-	-	-	-
Refrigeration	-	-	-	-	-	-	-	-	-	-	-	-	-
Space Heat	87.0	78.7	66.3	30.3	7.4	0.6	0.0	0.0	0.0	5.3	29.4	56.6	361.8
HP Supp.	-	-	-	-	-	-	-	-	-	-	-	-	-
Hot Water	5.5	5.4	6.2	6.1	5.3	5.3	5.0	4.6	4.5	4.7	4.6	5.7	62.9
Vent. Fans	-	-	-	-	-	-	-	-	-	-	-	-	-
Pumps & Aux.	-	-	-	-	-	-	-	-	-	-	-	-	-
Ext. Usage	-	-	-	-	-	-	-	-	-	-	-	-	-
Misc. Equip.	-	-	-	-	-	-	-	-	-	-	-	-	-
Task Lights	-	-	-	-	-	-	-	-	-	-	-	-	-
Area Lights	-	-	-	-	-	-	-	-	-	-	-	-	-
Total	93.9	87.9	75.0	42.5	46.5	83.7	156.7	199.0	121.1	54.6	48.9	65.7	1,075.4

Figure 7: As Built Simulated Energy Consumption for Building 3858 (Steam Consumption at Building)

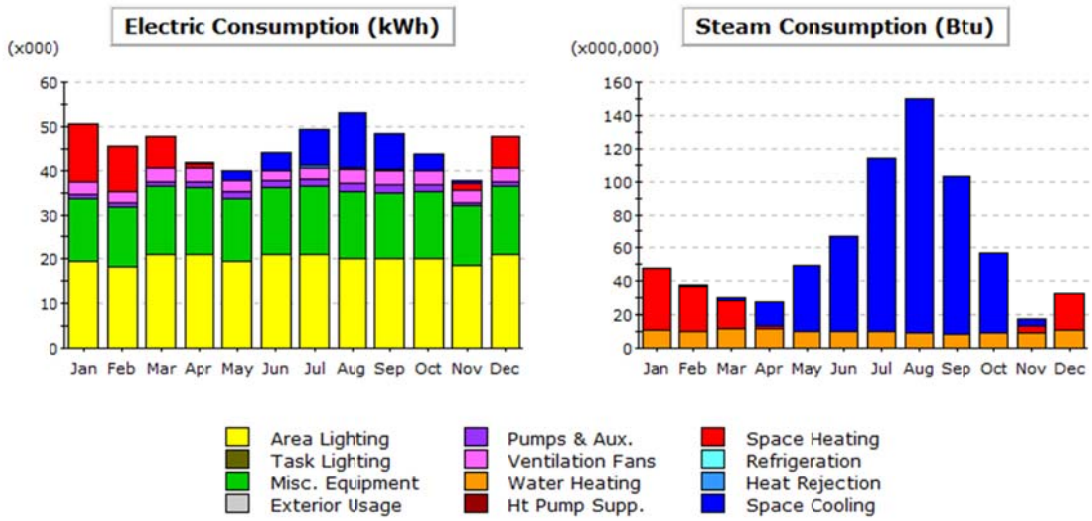

Electric Consumption (kWh x000)

	Jan	Feb	Mar	Apr	May	Jun	Jul	Aug	Sep	Oct	Nov	Dec	Total
Space Cool	-	0.16	0.07	0.48	2.12	4.20	8.34	12.61	8.28	3.66	0.57	-	40.50
Heat Reject.	-	-	-	0.00	0.03	0.13	0.40	0.57	0.29	0.04	-	-	1.46
Refrigeration	-	-	-	-	-	-	-	-	-	-	-	-	-
Space Heat	13.21	10.20	7.05	0.74	0.02	-	-	-	-	0.02	1.49	7.27	39.99
HP Supp.	-	-	-	-	-	-	-	-	-	-	-	-	-
Hot Water	-	-	-	-	-	-	-	-	-	-	-	-	-
Vent. Fans	2.92	2.77	3.21	3.21	2.48	2.14	2.58	3.06	3.06	3.06	2.77	3.21	34.46
Pumps & Aux.	0.90	0.82	0.89	1.19	1.53	1.36	1.64	1.95	1.96	1.81	0.73	0.85	15.63
Ext. Usage	-	-	-	-	-	-	-	-	-	-	-	-	-
Misc. Equip.	14.22	13.40	15.41	15.33	14.22	15.33	15.41	14.82	14.74	14.81	13.55	15.41	176.66
Task Lights	-	-	-	-	-	-	-	-	-	-	-	-	-
Area Lights	19.42	18.30	21.04	20.94	19.42	20.94	21.04	20.23	20.13	20.23	18.50	21.04	241.22
Total	50.66	45.64	47.67	41.89	39.82	44.10	49.41	53.24	48.46	43.63	37.61	47.78	549.92

Gas Consumption (Btu x000,000)

	Jan	Feb	Mar	Apr	May	Jun	Jul	Aug	Sep	Oct	Nov	Dec	Total
Space Cool	-	0.95	1.11	14.84	39.24	56.88	103.99	141.31	94.25	47.61	4.30	-	504.48
Heat Reject.	-	-	-	-	-	-	-	-	-	-	-	-	-
Refrigeration	-	-	-	-	-	-	-	-	-	-	-	-	-
Space Heat	36.75	26.67	16.72	1.14	0.04	-	-	-	-	0.05	4.43	21.95	107.76
HP Supp.	-	-	-	-	-	-	-	-	-	-	-	-	-
Hot Water	10.70	10.47	12.09	11.87	10.21	10.30	9.66	8.85	8.79	9.15	8.91	10.96	121.96
Vent. Fans	-	-	-	-	-	-	-	-	-	-	-	-	-
Pumps & Aux.	-	-	-	-	-	-	-	-	-	-	-	-	-
Ext. Usage	-	-	-	-	-	-	-	-	-	-	-	-	-
Misc. Equip.	-	-	-	-	-	-	-	-	-	-	-	-	-
Task Lights	-	-	-	-	-	-	-	-	-	-	-	-	-
Area Lights	-	-	-	-	-	-	-	-	-	-	-	-	-
Total	47.45	38.08	29.92	27.85	49.49	67.18	113.66	150.16	103.04	56.81	17.65	32.91	734.20

Figure 8: As Built Simulated Energy Consumption for Building 3859 (Steam Consumption at Building)

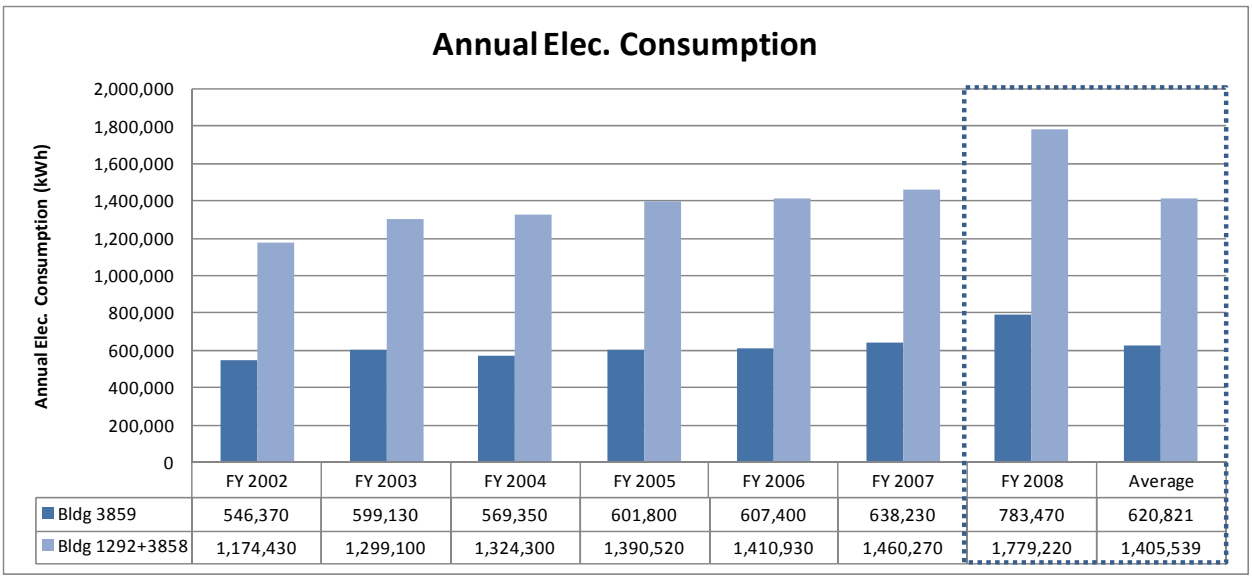

Figure 9: Historical Annual Electricity Consumption and Simulated Consumption

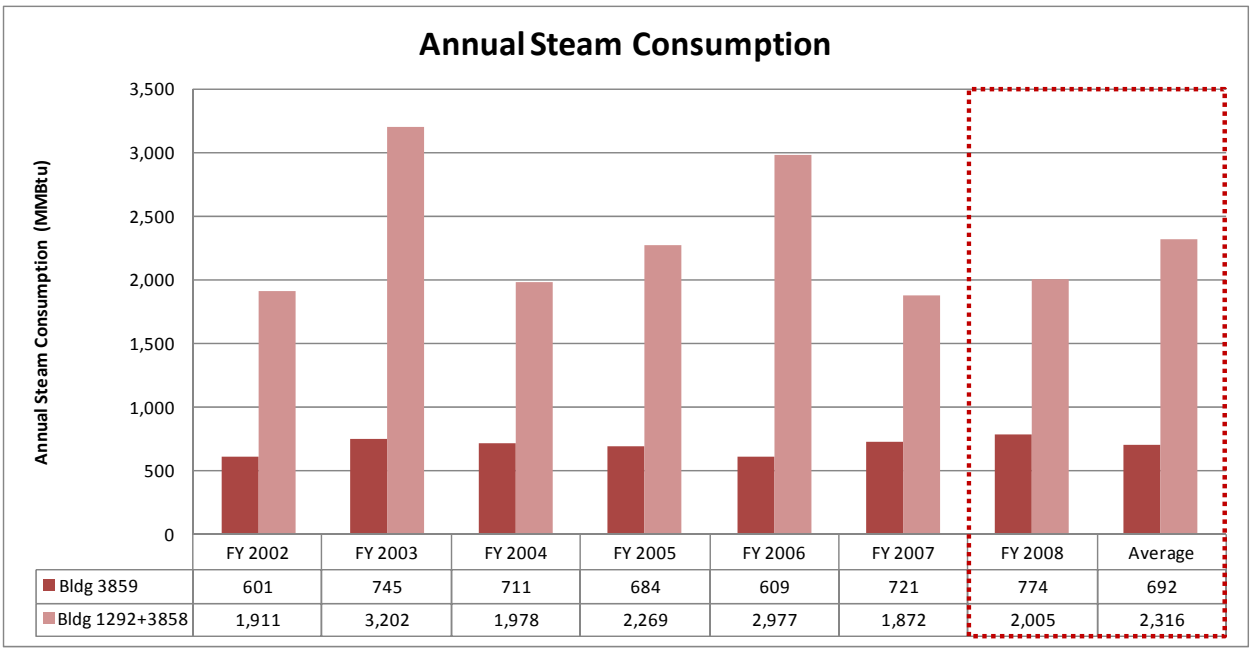

Figure 10: Historical Annual Steam Consumption and Simulated Consumption at Buildings

Season	Month	Temperature (F)
Spring	March	62.6
Summer	June	71.6
Fall	September	59
Winter	December	50

Table 2: Seasonal Temperature Changes in Tokyo Bay (Guo and Yanagi, 1996)

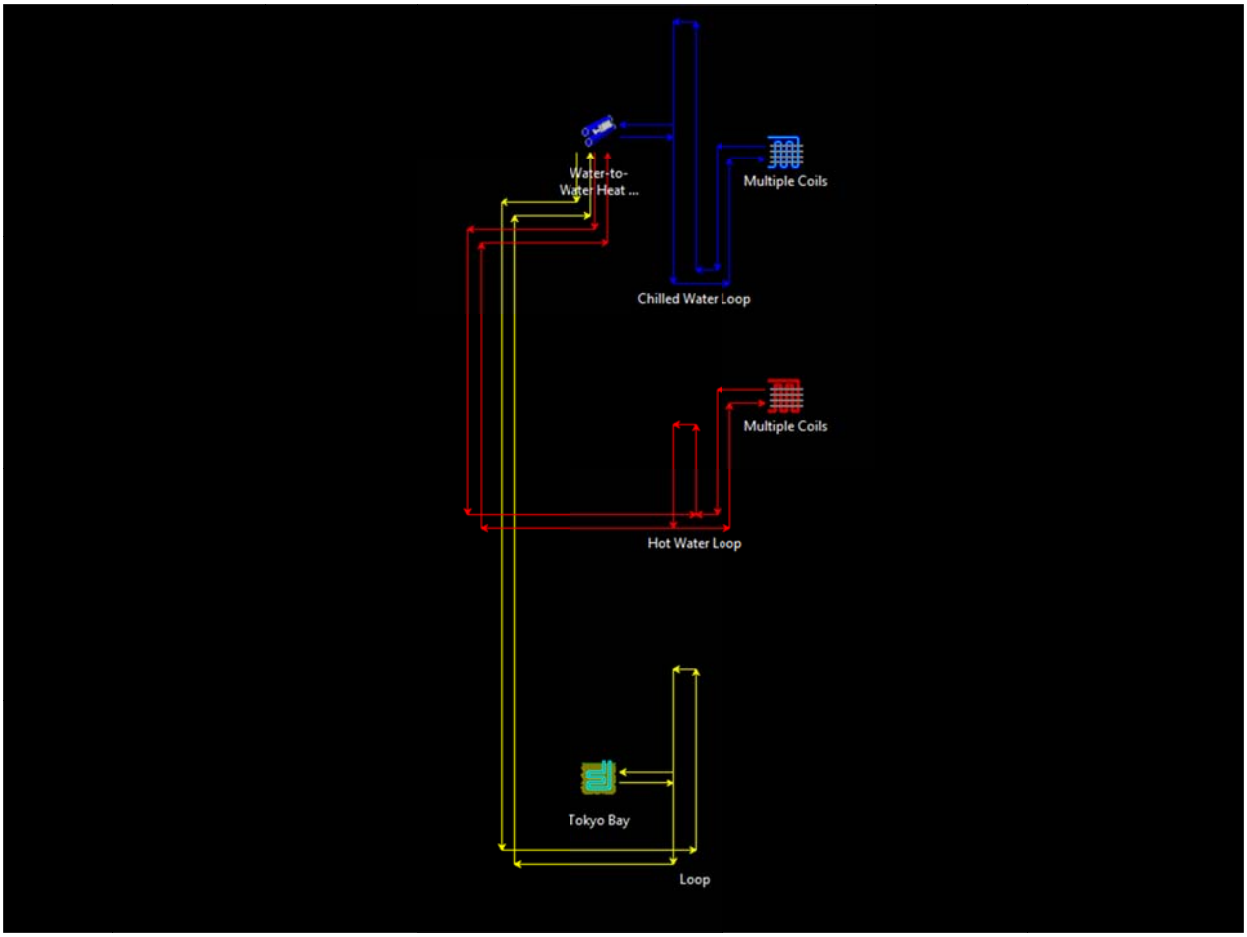

Figure 11: Proposed Ground Source Heat Pump System for Building 3858 and 3859.

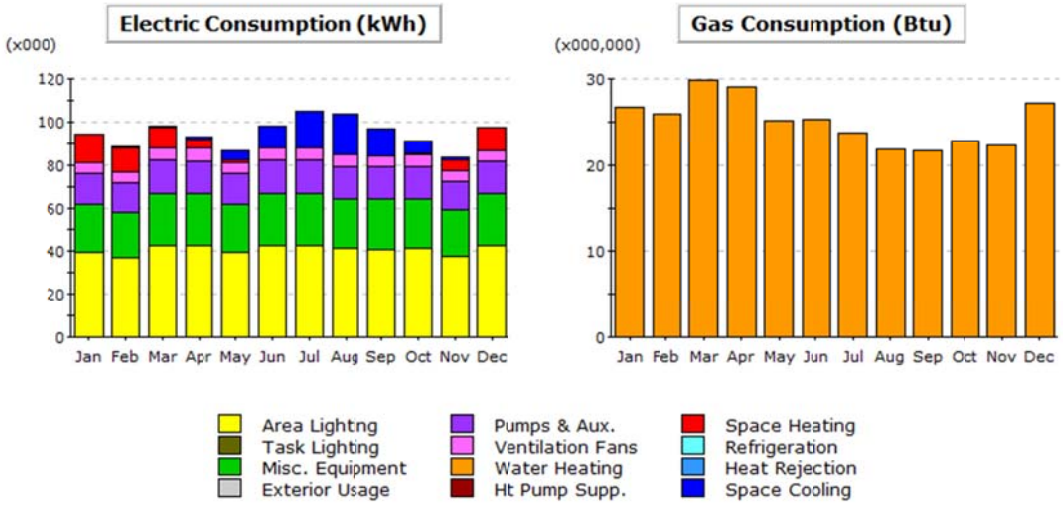

Electric Consumption (kWh x000)

	Jan	Feb	Mar	Apr	May	Jun	Jul	Aug	Sep	Oct	Nov	Dec	Total
Space Cool	0.1	0.3	0.4	1.2	4.8	10.0	16.4	19.0	12.3	5.6	1.2	0.3	71.6
Heat Reject.	-	-	-	-	-	-	-	-	-	-	-	-	-
Refrigeration	-	-	-	-	-	-	-	-	-	-	-	-	-
Space Heat	13.4	11.5	9.9	3.8	0.7	0.1	0.0	-	0.1	0.8	4.7	10.4	55.4
HP Supp.	-	-	-	-	-	-	-	-	-	-	-	-	-
Hot Water	-	-	-	-	-	-	-	-	-	-	-	-	-
Vent. Fans	5.2	5.0	5.6	5.8	5.3	5.8	5.8	5.5	5.5	5.5	5.0	5.4	65.4
Pumps & Aux.	14.1	13.6	15.4	15.7	14.3	15.8	15.8	15.0	15.0	15.0	13.6	14.7	178.0
Ext. Usage	-	-	-	-	-	-	-	-	-	-	-	-	-
Misc. Equip.	22.1	20.7	23.8	23.6	22.1	23.6	23.8	22.9	22.7	22.9	21.1	23.8	273.0
Task Lights	-	-	-	-	-	-	-	-	-	-	-	-	-
Area Lights	39.6	37.3	42.9	42.7	39.6	42.7	42.9	41.3	41.1	41.3	37.8	42.9	492.3
Total	94.5	88.5	98.0	92.8	86.8	98.0	104.6	103.7	96.8	91.2	83.4	97.5	1,135.8

Gas Consumption (Btu x000,000)

	Jan	Feb	Mar	Apr	May	Jun	Jul	Aug	Sep	Oct	Nov	Dec	Total
Space Cool	-	-	-	-	-	-	-	-	-	-	-	-	-
Heat Reject.	-	-	-	-	-	-	-	-	-	-	-	-	-
Refrigeration	-	-	-	-	-	-	-	-	-	-	-	-	-
Space Heat	-	-	-	-	-	-	-	-	-	-	-	-	-
HP Supp.	-	-	-	-	-	-	-	-	-	-	-	-	-
Hot Water	26.69	25.90	29.76	29.07	25.18	25.27	23.76	21.85	21.75	22.75	22.31	27.19	301.47
Vent. Fans	-	-	-	-	-	-	-	-	-	-	-	-	-
Pumps & Aux.	-	-	-	-	-	-	-	-	-	-	-	-	-
Ext. Usage	-	-	-	-	-	-	-	-	-	-	-	-	-
Misc. Equip.	-	-	-	-	-	-	-	-	-	-	-	-	-
Task Lights	-	-	-	-	-	-	-	-	-	-	-	-	-
Area Lights	-	-	-	-	-	-	-	-	-	-	-	-	-
Total	26.69	25.90	29.76	29.07	25.18	25.27	23.76	21.85	21.75	22.75	22.31	27.19	301.47

Figure 12: GSHP Simulated Energy Consumption for Building 1292

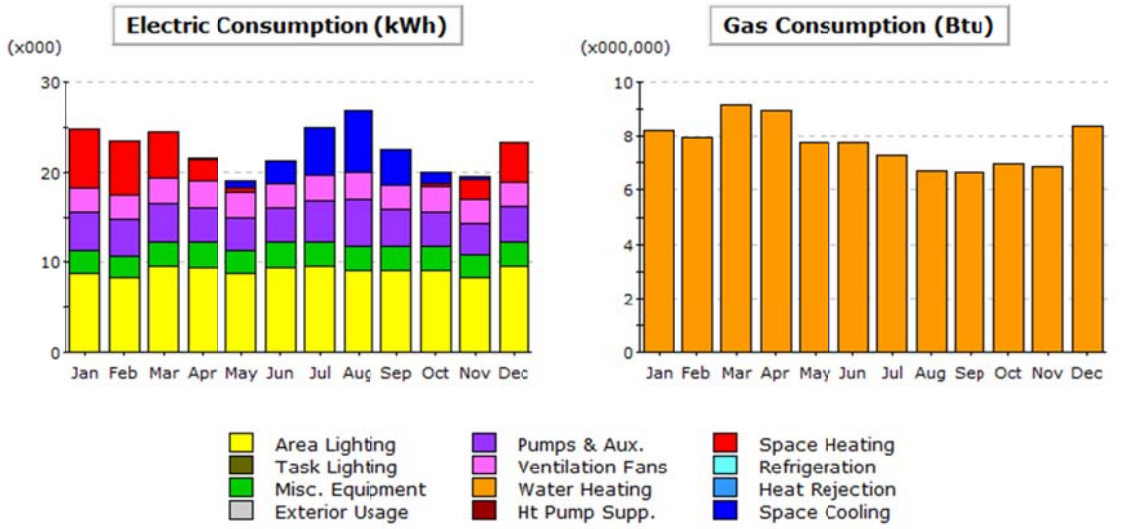

Electric Consumption (kWh x000)

	Jan	Feb	Mar	Apr	May	Jun	Jul	Aug	Sep	Oct	Nov	Dec	Total
Space Cool	-	0.05	0.04	0.12	0.82	2.45	5.31	6.98	3.95	1.17	0.20	-	21.09
Heat Reject.	-	-	-	-	-	-	-	-	-	-	-	-	-
Refrigeration	-	-	-	-	-	-	-	-	-	-	-	-	-
Space Heat	6.64	6.00	5.15	2.37	0.53	0.02	-	-	-	0.41	2.23	4.46	27.82
HP Supp.	-	-	-	-	-	-	-	-	-	-	-	-	-
Hot Water	-	-	-	-	-	-	-	-	-	-	-	-	-
Vent. Fans	2.69	2.65	2.85	2.91	2.79	2.69	2.79	2.92	2.68	2.80	2.65	2.66	33.07
Pumps & Aux.	4.21	4.04	4.22	3.86	3.58	3.79	4.58	5.13	4.11	3.68	3.52	3.87	48.58
Ext. Usage	-	-	-	-	-	-	-	-	-	-	-	-	-
Misc. Equip.	2.56	2.42	2.78	2.76	2.56	2.76	2.78	2.67	2.66	2.67	2.44	2.78	31.85
Task Lights	-	-	-	-	-	-	-	-	-	-	-	-	-
Area Lights	8.78	8.28	9.52	9.47	8.78	9.47	9.52	9.15	9.11	9.15	8.37	9.52	109.13
Total	24.88	23.43	24.55	21.50	19.06	21.19	24.98	26.86	22.50	19.88	19.41	23.29	271.54

Gas Consumption (Btu x000,000)

	Jan	Feb	Mar	Apr	May	Jun	Jul	Aug	Sep	Oct	Nov	Dec	Total
Space Cool	-	-	-	-	-	-	-	-	-	-	-	-	-
Heat Reject.	-	-	-	-	-	-	-	-	-	-	-	-	-
Refrigeration	-	-	-	-	-	-	-	-	-	-	-	-	-
Space Heat	-	-	-	-	-	-	-	-	-	-	-	-	-
HP Supp.	-	-	-	-	-	-	-	-	-	-	-	-	-
Hot Water	8.20	7.96	9.14	8.93	7.73	7.75	7.29	6.70	6.67	6.98	6.85	8.35	92.57
Vent. Fans	-	-	-	-	-	-	-	-	-	-	-	-	-
Pumps & Aux.	-	-	-	-	-	-	-	-	-	-	-	-	-
Ext. Usage	-	-	-	-	-	-	-	-	-	-	-	-	-
Misc. Equip.	-	-	-	-	-	-	-	-	-	-	-	-	-
Task Lights	-	-	-	-	-	-	-	-	-	-	-	-	-
Area Lights	-	-	-	-	-	-	-	-	-	-	-	-	-
Total	8.20	7.96	9.14	8.93	7.73	7.75	7.29	6.70	6.67	6.98	6.85	8.35	92.57

Figure 13: GSHP Simulated Energy Consumption for Building 3858

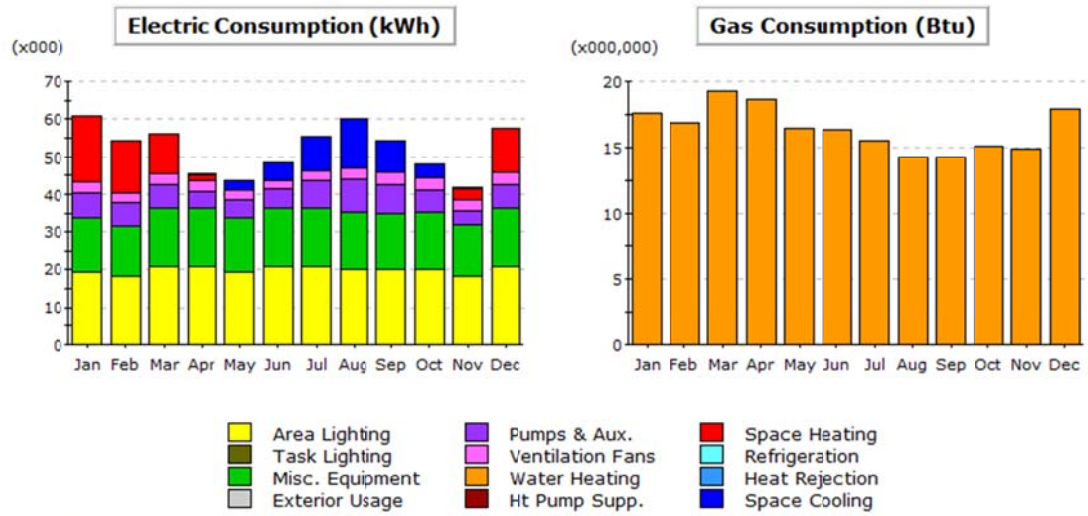

Electric Consumption (kWh x000)

	Jan	Feb	Mar	Apr	May	Jun	Jul	Aug	Sep	Oct	Nov	Dec	Total
Space Cool	-	0.15	0.08	0.64	2.49	4.80	9.26	13.28	8.75	3.77	0.45	-	43.66
Heat Reject.	-	-	-	-	-	-	-	-	-	-	-	-	-
Refrigeration	-	-	-	-	-	-	-	-	-	-	-	-	-
Space Heat	17.88	13.81	10.31	1.16	0.03	-	-	-	-	0.03	2.88	11.67	57.77
HP Supp.	-	-	-	-	-	-	-	-	-	-	-	-	-
Hot Water	-	-	-	-	-	-	-	-	-	-	-	-	-
Vent. Fans	2.92	2.77	3.21	3.21	2.48	2.14	2.58	3.06	3.06	3.06	2.77	3.21	34.46
Pumps & Aux.	6.53	5.89	5.94	4.30	4.98	5.09	6.98	8.88	7.73	6.10	3.60	6.17	72.20
Ext. Usage	-	-	-	-	-	-	-	-	-	-	-	-	-
Misc. Equip.	14.22	13.40	15.41	15.33	14.22	15.33	15.41	14.82	14.74	14.81	13.55	15.41	176.66
Task Lights	-	-	-	-	-	-	-	-	-	-	-	-	-
Area Lights	19.42	18.30	21.04	20.94	19.42	20.94	21.04	20.23	20.13	20.23	18.50	21.04	241.22
Total	60.97	54.31	55.98	45.58	43.62	48.30	55.27	60.27	54.40	48.01	41.75	57.50	625.97

Gas Consumption (Btu x000,000)

	Jan	Feb	Mar	Apr	May	Jun	Jul	Aug	Sep	Oct	Nov	Dec	Total
Space Cool	-	-	-	-	-	-	-	-	-	-	-	-	-
Heat Reject.	-	-	-	-	-	-	-	-	-	-	-	-	-
Refrigeration	-	-	-	-	-	-	-	-	-	-	-	-	-
Space Heat	-	-	-	-	-	-	-	-	-	-	-	-	-
HP Supp.	-	-	-	-	-	-	-	-	-	-	-	-	-
Hot Water	17.63	16.90	19.27	18.59	16.43	16.35	15.45	14.28	14.27	15.03	14.88	17.90	196.98
Vent. Fans	-	-	-	-	-	-	-	-	-	-	-	-	-
Pumps & Aux.	-	-	-	-	-	-	-	-	-	-	-	-	-
Ext. Usage	-	-	-	-	-	-	-	-	-	-	-	-	-
Misc. Equip.	-	-	-	-	-	-	-	-	-	-	-	-	-
Task Lights	-	-	-	-	-	-	-	-	-	-	-	-	-
Area Lights	-	-	-	-	-	-	-	-	-	-	-	-	-
Total	17.63	16.90	19.27	18.59	16.43	16.35	15.45	14.28	14.27	15.03	14.88	17.90	196.98

Figure 14: GSHP Simulated Energy Consumption for Building 3859

Commodity	Unit	DOD Rate	Non DOD Rate
Electricity	MWH	$77.56	$165.23
Potable Water	KGAL	$3.55	$11.42
Non Potable Water	KGAL	$1.00	$1.11
Steam	MBTU	$22.79	$37.01
Sewage	KGAL	$4.17	$5.61
Compressed Air	KCF	$1.00	$1.27
Natural Gas	MBTU	$33.12	N/A
Solid Waste	CUYD	$13.85	N/A

Table 3: Utility Rate for the Target Buildings

Building	Scenario	Annual Elec. Use (MWh)	Annual N.G. Use (MMBtu)	Total Annual Energy Use (MMBtu)	Total Annual Energy Savings (%)	Annual Energy Cost	Cost Savings
Building 1292 (250 ton)	Baseline	1,297	2,912	7,338		$322,029	-
	GSHP	1,136	301	4,178	43.06%	$198,826	$123,203
Building 3858 (70 ton)	Baseline	193	2,150	2,808		$111,441	-
	GSHP	272	93	1,019	63.70%	$48,293	$63,148
Sub Total (1292 + 3898)	Baseline	1,490	5,062	10,146		$433,470	-
	GSHP	1,407	394	5,197	48.77%	$247,118	$186,351
Building 3859 (130 ton)	Baseline	550	1,468	3,345		$145,209	-
	GSHP	626	197	2,333	30.25%	$110,719	$34,490
Total	Baseline	2,040	6,530	13,491		$578,678	-
	GSHP	2,033	591	7,531	44.18%	$357,837	$220,841

Table4: Summary: Energy and Cost Savings

Percent of Initial Cost (%)	Initial Cost ($)	Simple Payback (yr)
50%	1,660,088	7.52
60%	1,992,105	9.02
70%	2,324,123	10.52
80%	2,656,140	12.03
90%	2,988,158	13.53
100%	3,320,175	15.03
110%	3,652,193	16.54
120%	3,984,210	18.04
130%	4,316,228	19.54
140%	4,648,245	21.05
150%	4,980,263	22.55

Table 5: Parametric Study of Initial Cost and Simple Payback

Appendix A: Cost Information for Slim Jim System

SLIM JIM® The Geo Lake Plate
"Pond Loop in a Package"

- The Lake Loop of Choice for Fluid to Fluid Heat Transfer in Water Cooled Equipment - A/C, Heat Pumps, Refrigeration, Etc. (Lakes, Ponds, Rivers, Oceans).
- 304 Stainless Steel, 316 Stainless Steel, AL6XN or Titanium - Spot & Roll Welded
- Easy to Install - Easy to Flush - Labor Friendly
- No Limit to Job Size - Single to Multiple** Units

SLIM JIM® SPECIFICATIONS

DESCRIPTION	DIMENSIONS	PRESSURE DROP (Approx)	VOLUME (WATER/Approx)	304 STAINLESS STEEL WEIGHT	304 STAINLESS STEEL LIST PRICE
SJ-02T	2' x 6' x 3/8"	6 GPM, Approx 1.5 psi	1.2 gal	51 lbs	$ 1,843.00
SJ-03T	4' x 5' x 3/8"	9 GPM, Approx 1.5 psi	2.0 gal	90 lbs.	$ 2,809.00
SJ-04T	4' x 6' x 3/8"	12 GPM, Approx 1.5 psi	2.4 gal	110 lbs.	$ 3,138.00
SJ-05T	4' x 8' x 3/8"	15 GPM, Approx 2 psi	3.2 gal	145 lbs.	$ 3,788.00
*SJ-08T	4' x 12' x 3/8"	24 GPM, Approx 5 psi	4.8 gal	220 lbs.	$ 5,077.00
*SJ-10T	4' x 15' x 3/8"	30 GPM, Approx 6 psi	7.0 gal	275 lbs.	$ 6,049.00

Inlets/Outlets – 1 ¼" MPT

*SJ-08T & SJ-10T - Two (2) Pass (In and Out Same End)

SJ Legs	1 Set (2) - 304 SS	(60" Tall - Provides 12" Clearance from Bottom)	$ 370.00
SJ Legs	1 Set (2) - 304 SS	(36" Tall - Provides 12" Clearance from Bottom)	$ 296.00

316 SS, AL6XN or TITANIUM

Requires Special Quote for Pricing & Availability

Price List Effective 5/1/07

Prices Subject to Change without Notice

**Multiple plates of like capacity can be manifold in field with polyethylene pipe to accommodate larger loads.
Or, we can custom build (pre-manifold multiple plates) with headers equipped with flange connections (Single Point Hookups), reinforced frame, fitted with legs to stand off bottom and lift points to handle larger loads (special quotes required).

Flow Rate: Three (3) GPM per ton equipment.
Approx Heat Transfer Rate**: 100 BTU per Sq. Ft. transfer surface of plate per degree Delta T in still body of water. Both sides of plate are exchanger surface.
(Note, any current accentuates performance greatly and allows for closer grouping of multiple plate assembly – such as river applications)

Example: **SJ-03T Plate**
4' x 5' x 2 = 40
40 x 100 = 4,000
4,000 x 10ΔT = 40,000 BTU approx. heat of rejection

***Shallow bodies of water in colder climates will require additional plate capacity for heating*

For Additional Information & Technical Assistance, Contact :
For Dealer pricing, please fax a written request on Company Letterhead to:

AWEB SUPPLY
7350 Tom Drive, Baton Rouge, LA 70806
225/928-2630 * 888-277-2932 * Fax 225/928-2087
Email: info@awebgeo.com
Website: www.awebgeo.com
Rev. 10/07