SCE Voltage Control Challenges

Charles Vartanian
SCE Distributed Energy Resources (DER)

ORNL DECC Program Meeting
October 11, 2007

SCE Profile

- 50,000 Mile^2 Service Territory
- 120 Years of Service
- $17 Billion T&D Assets

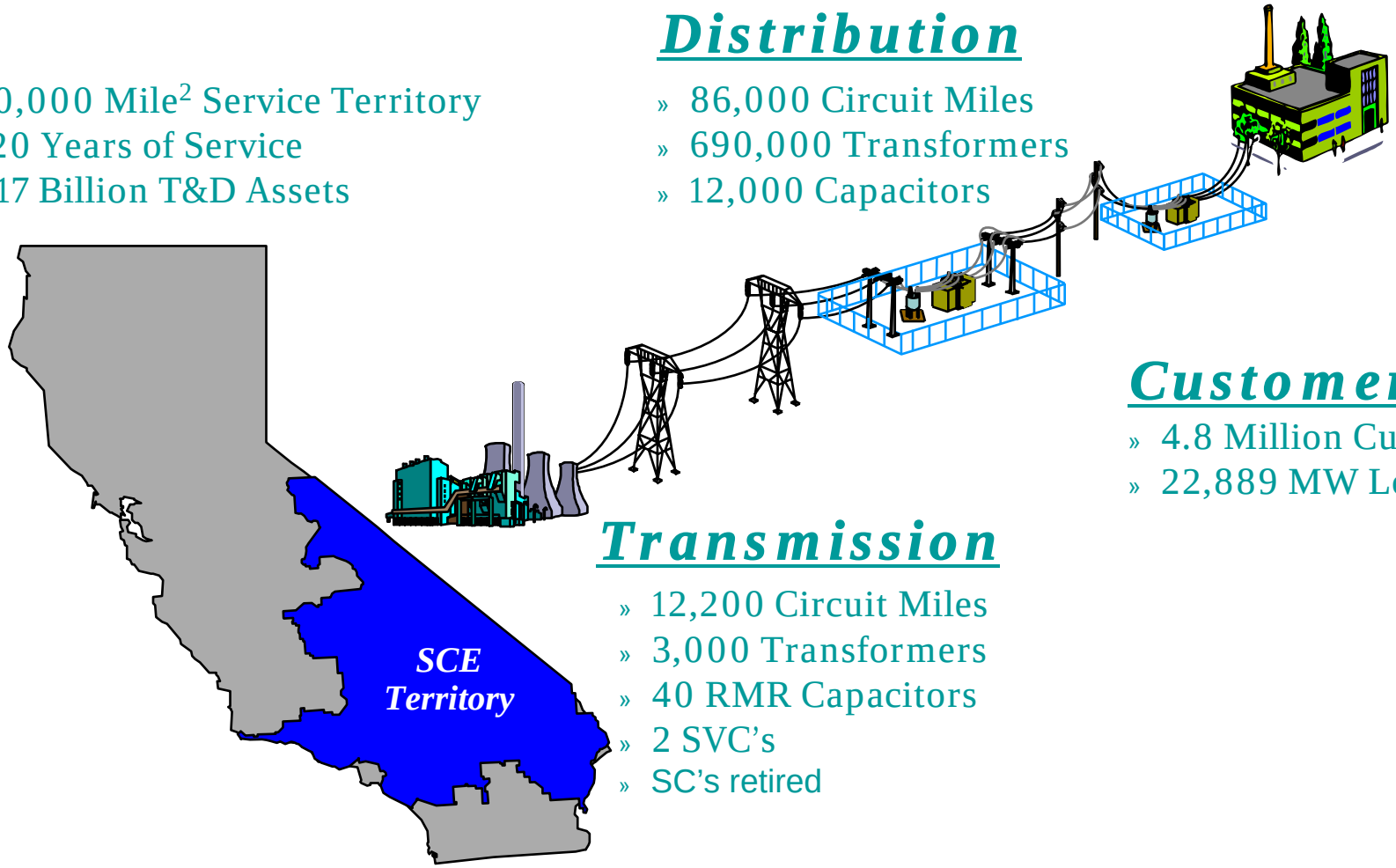

Distribution

- 86,000 Circuit Miles
- 690,000 Transformers
- 12,000 Capacitors

Transmission

- 12,200 Circuit Miles
- 3,000 Transformers
- 40 RMR Capacitors
- 2 SVC's
- SC's retired

Customers

- 4.8 Million Customers
- 22,889 MW Load

System Level VAR Planning

» *VAR Planning Criteria*

- Net Zero, Distribution, Subtransmission, Area Interfaces
- Target Self Sufficiency at Peak
- Conservative, Minimizes Losses, Simplifies Planning and Implementation
- Limits Operational Flexibility and Optimization

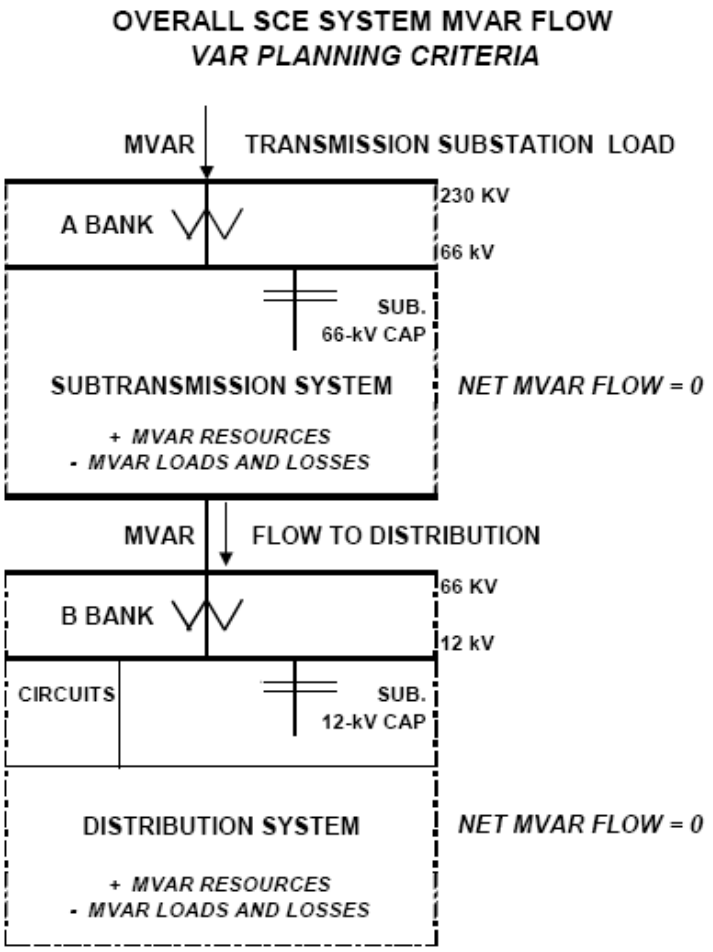

Figure 1.B – Distribution of VAR Resource to Obtain WATT / VAR Ratio

Distribution VAR Planning

» *CPUC Criteria*

- Rule 2, Customer Load, +/- 5% nominal v-range
- Rule 21, Customer Generation, no regulation
- DRIVER – Acceptable service to load

» *Distribution VAR Projects*

- 'Commodity' Solution, Bulk Planning
- Emerging Practices
  - DER/DR For Bulk System Support
  - Centralized Reactive Resource Control
  - Hierarchical Control Schemes
  - Increasing system stress, advancing VAR management practice, Valley, Devers, Rector

Transmission VAR Planning

» *WECC/NERC Criteria*

- Steady State, N-1, 5%
- Post-Transient, N-1, 7%/margin
- Transient, N-1, 20%
- DRIVER - AVOID WIDE AREA CASCADING IMPACTS

» *Transmission VAR Projects*

- Discreet, Highly Engineered Solutions
- RMR Capacitors
  - 3,000 MVAR switched 230 kV caps, 1999-2003
- Valley and Mira Loma 500 kV Shunt Caps
- Devers & Rector 230 kV SVC's

VAR Challenges… to Opportunities

» *System Isolation… to Coordination*

- Distribution
- Subtransmission
- Transmission

» *Fragmented Ownership… to Unified Purpose*

- Field Engineering
- Engineering Advancement
- Transmission & Interconnection Planning

» *Enabling Driver, A/C Stall*

» *Enabling Activity, RD&D*

A/C Stall, An Opportunity

» *System Isolation to Coordination*

- Cross-System Phenomena: Load Through Transmission

» *Fragmented Ownership…to Unified Purpose*

- Across Utility, Across Industry, Across Economy

» *What Is It?*

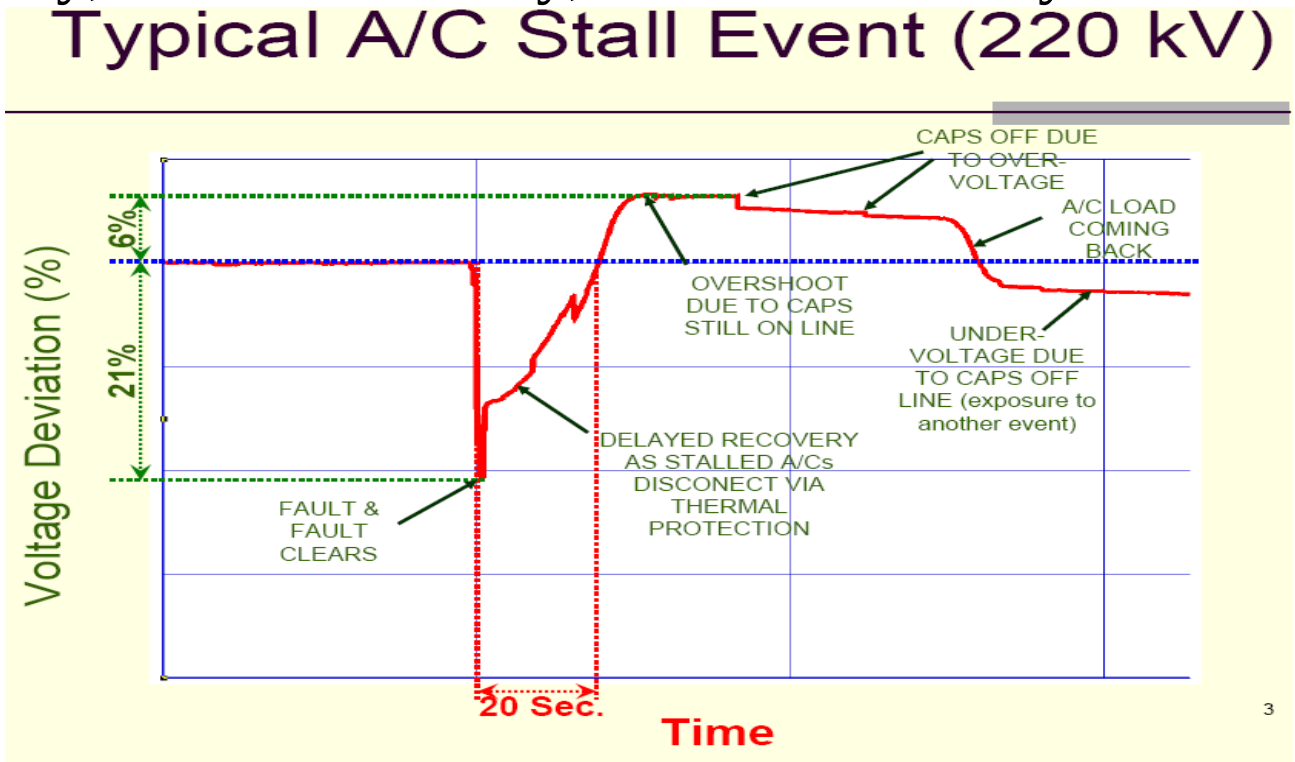

A/C Stall, Transmission Planning

Air Conditioner Stalling

- When: Voltage dips below 80% for a short duration such as during a fault.
- What: Residential air conditioner compressor motors lock up. Once stalled draws six times the running current. Current mostly reactive.
- Why: Drop in voltage decrease energy available for motor to overcome pressure during compression cycle.
- Where: High temperature area with large residential AC load.

On Going Activities

- SCE investigating under voltage load shedding for summer of 2007.
- SCE pursuing under voltage tripping on AC units by manufacturers.
- WECC Load Modeling Task Force
  - Testing AC units (SCE, APS, BPA)
  - CEC providing funds to develop better models

A/C Stall, Eng. Adv. & Field Engineering

Why Are We Concerned?

- Undervoltage event could lead to total system voltage collapse
- Presents voltage sag to all customers in the area
- Getting worse as more homes with air conditioners are built in warm inland areas
- Some circuits trip, but most load lost is A/C units
- SCE has ~2 Million A/C units on

Potential A/C Stalling Solutions

- System Level
  - Measures that can be implemented by utility on electrical system
- A/C Unit Level
  - Solutions that can be implemented at the individual A/C unit (customer side of meter)

A/C Stall, Eng. Adv. & Field Engineering

System Level Measures

- Pros:
  - Can be implemented in few locations
  - Relatively easy to control
  - Should stop problem from spreading to other areas
- Cons:
  - Cannot stop voltage drop in immediate area of fault
  - Could be very costly
  - May not work
  - Presents new risk of load drops

A/C Unit Level Solutions

- Pros:
  - Solve the problem at its source
  - Minimal inconvenience to customers
  - Limit voltage drop period
  - Prevent spread to other areas
- Cons:
  - Need to install equipment a many locations
  - Retrofit process could be difficult and costly
  - Most off-the-shelf units do not help much

Enabling Activity, DER Research

» *Circuit of the future*

- Value of Dynamic VARS

» *DOE DG Integration, Catalina Island*

- Beyond IEEE 1547 Rule 21

SCE's Circuit of the Future, Avanti 12 kV

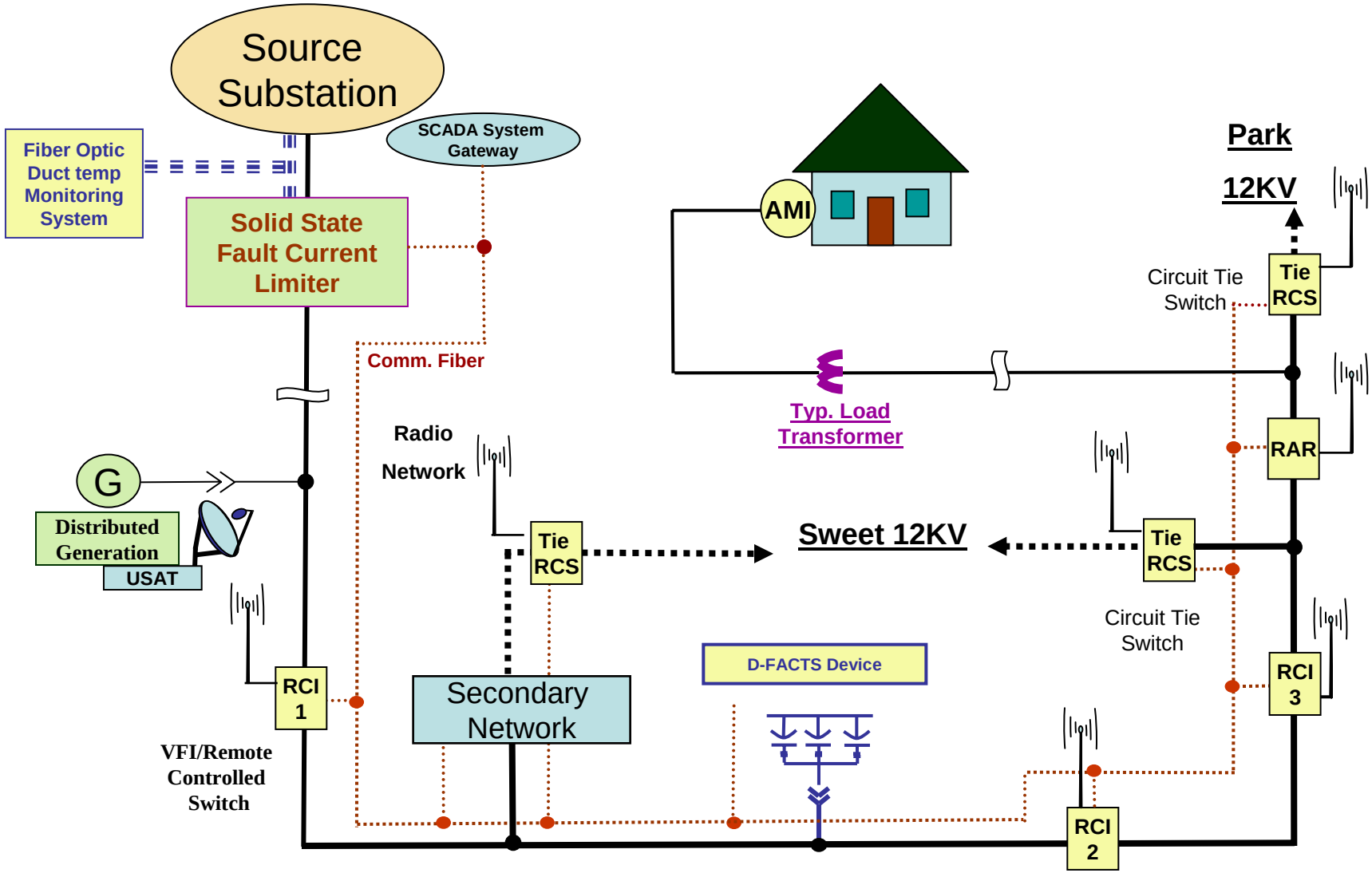

Application of Device

- Provide ***instantaneous*** voltage support to mitigate ***temporary*** primary-level voltage sags that exceed SCE Rule 2's steady-state lower limit; -5% variation from nominal voltage
  - Per IEEE PQ Monitoring Std 1159
    - ***Instantaneous***, 0.5 – 30 cycles, device turn-on time
    - ***Temporary***, 3 seconds to 1 minute, device operation duration
- Device will enable enhanced utility service (beyond Rule 2) by mitigating temporary voltage sags, and increase likelihood of ride-through of end users' CBEMA-ITC compliant devices.

D-FACTS Functionality, D-SVC Spec

Overview

WHAT DO WE WANT?

- Fast response and mitigation of temporary voltage sags
  - Respond and mitigate infrequent temporary deep sags -7 to -12%, (15/year recorded, EPRI DPQ Study)
  - Don't try to fix very infrequent serious events: block device if sag exceeds -12% (Rule 21-based limit)

INPUT FOR DEVELOPMENT OF SPECIFICATION:

- Emulate organization/headings from relevant sections of Rector SVC spec.
  - "Existing Power System Characteristics" (3.8)
  - "Electrical Performance Requirements" (3.9)
  - "SVC Operating Characteristics" (3.10)

  But, much less detail needed. And, distribution vs. transmission focus, i.e., Rule 2 & IEEE PQ Std vs. WECC T-Planning Criteria.

<u>All stated quantities</u> for proposed D-SVC spec refer to or are based on criteria relevant to distribution:

- SCE CPUC Tariff Rule 2
- SCE Voltage Fluctuation Limit Criteria
- IEEE 1559 PQ Monitoring Standard

Modeled "Virtual" Circuit of the Future, WVU DoE Project, D-SVC Sizing

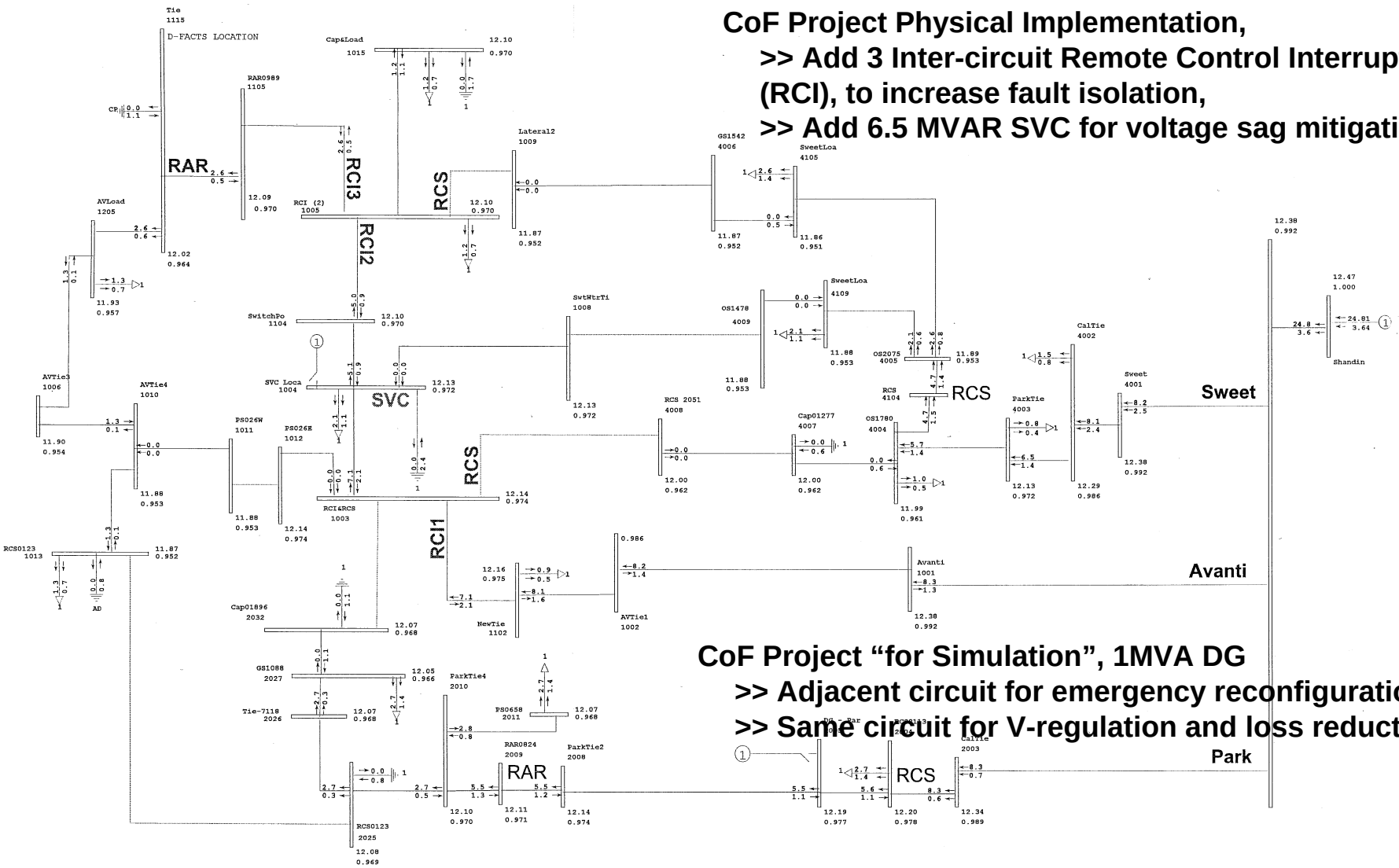

CoF Project Physical Implementation,

>> Add 3 Inter-circuit Remote Control Interrupters (RCI), to increase fault isolation,

>> Add 6.5 MVAR SVC for voltage sag mitigation

CoF Project "for Simulation", 1MVA DG

>> Adjacent circuit for emergency reconfiguration

>> Same circuit for V-regulation and loss reduction

CoF, Notional Benefits of Improved Performance, WVU DoE Project

» *Voltage Improvement and Loss Reduction*

- Circuit Voltages w/ DG, 0.96-0.99 → 0.98-1.00
- Loss Reduction Impact, 140 MWh/yr for CoF
- 7 cents/kWh saved energy procurement, $10K/ckt-yr

» *Reliability Improvement, 2X Fault Isolation*

- Basis: 56 Minutes, System SAIDI, Assumed 25% reduction
  - Avoided lost revenue 11 cents/kWh, or Value of Service $5/kWh?
  - $286K or $51 million, system savings

» *Value' in a Deterministic Planning Paradigm?*

Proposed, Catalina DG Integration

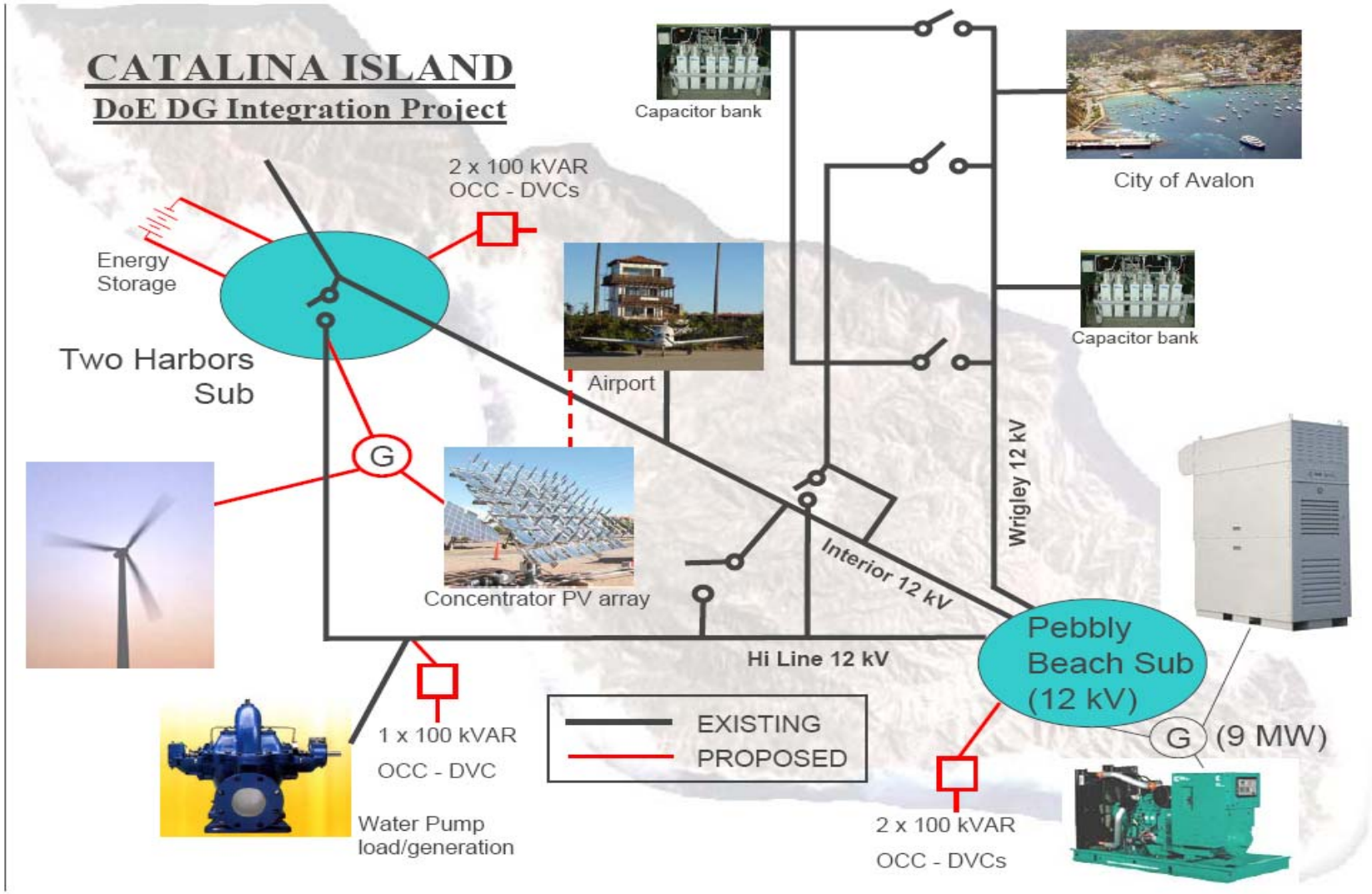

Proposed, Catalina DG Integration

- *Develop and demonstrate use of DER technologies to meet at least 15% of peak load on Catalina Island through use of*
  - Renewable DG: Micro hydro, PV, Wind
  - Energy Storage
  - Dynamic VAR sources
- *Reactive Management Challenges*
  - High Penetration of Intermittent Renewables, Inverters
  - Microgrid Environment, IEEE 1547.4 – Beyond Rule 21
  - Multiple Distributed VAR Sources
- *Project Team; OCC, ORNL, CE, SCE*

Charles Vartanian
SCE DER
Charles.Vartanian@sce.com
1.323.889.5516