Power Electronics Developments for Utility Applications

Leon M. Tolbert

ORNL DECC Program Meeting

October 11, 2007

Need for Advanced Grid Technologies

- **Building new transmission lines or power generation centers is costly.**
- **Operating margins are shrinking on transmission lines.**
- **System is less reliable.**
  - **Local blackouts**
  - **Smaller stability margins**
  - **Line congestion**
- **Need exists for increasing margins for existing power system by controlling power flows and adding more generation at the load sites (distributed generation).**

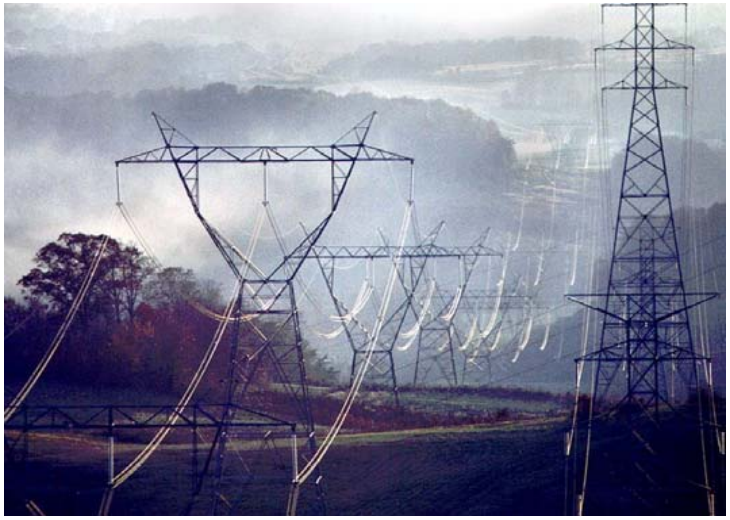

Congestion and Distributed Generation (DG) Installation Costs

- **Congestion costs consumers ~$500 million annually more than what electricity would normally cost if there were no congestion issues.**
- **Many blackouts are mostly due to congestion issues.**
- **Power electronics can account for as much as 30 – 40 % of a DG installation cost.**
- **Need to lower installed cost of DG and to provide additional means of recouping costs other than simply providing real power.**
- **Most utility scale power electronics are custom designed with single functionality which leads to an expensive installation that is not as reliable.**

Present Power Electronics Shortcomings for FACTS Converters

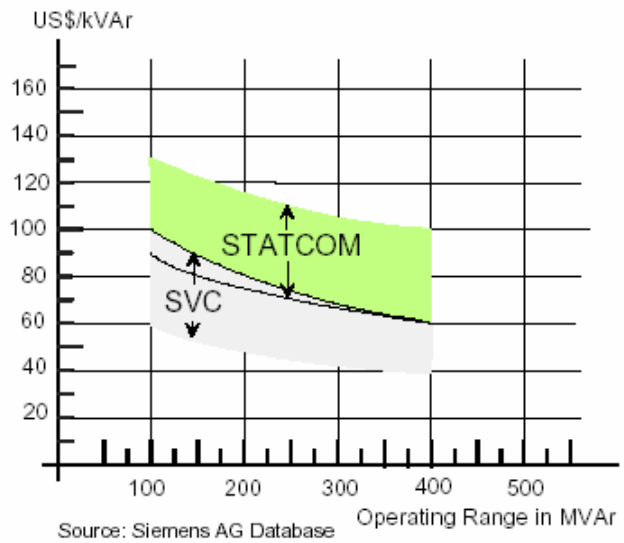

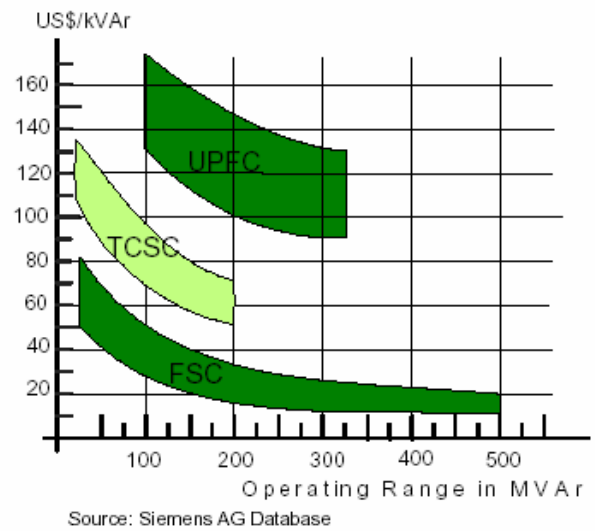

- **Voltage and power ratings of high frequency individual devices is limited.**
- **Utility scale PE is a low volume market.**
- **High power PE is expensive because custom designs are needed for each unique application.**
- **Reliability of power electronics tends to fall short of the utilities' need for 30 – 50 year lifetime.**
- **Modular converters available for low power industries – why not make modular systems available for high power?**

Modular Utility-Scale Converter and Controller

- **Design high power modules that can be combined to make a converter for utility scale applications such as interface with distributed generation (solar cells, fuel cells, microturbines, etc).**
- **Modules/converter will have an intelligent controller.**
- **Modules have protection against faults and can reset or bypass themselves if needed.**
- **Will lead to a high power electronics converter that**
  - **Has high reliability**
  - **Extends the operational capabilities of the present power grid (power flow control, voltage regulation)**
  - **Makes installation of distributed generation (DG) more cost effective**

Interface Requirements

- **Converters connected to multiple types of DG**
  - **Fuel Cells**
  - **Solar Cells**
  - **Wind**
- **Increase reliability of utility and improve power quality.**
- **Ability to readily interface with energy storage devices**
  - **Batteries**
  - **Ultracapacitors**
  - **Flywheels**

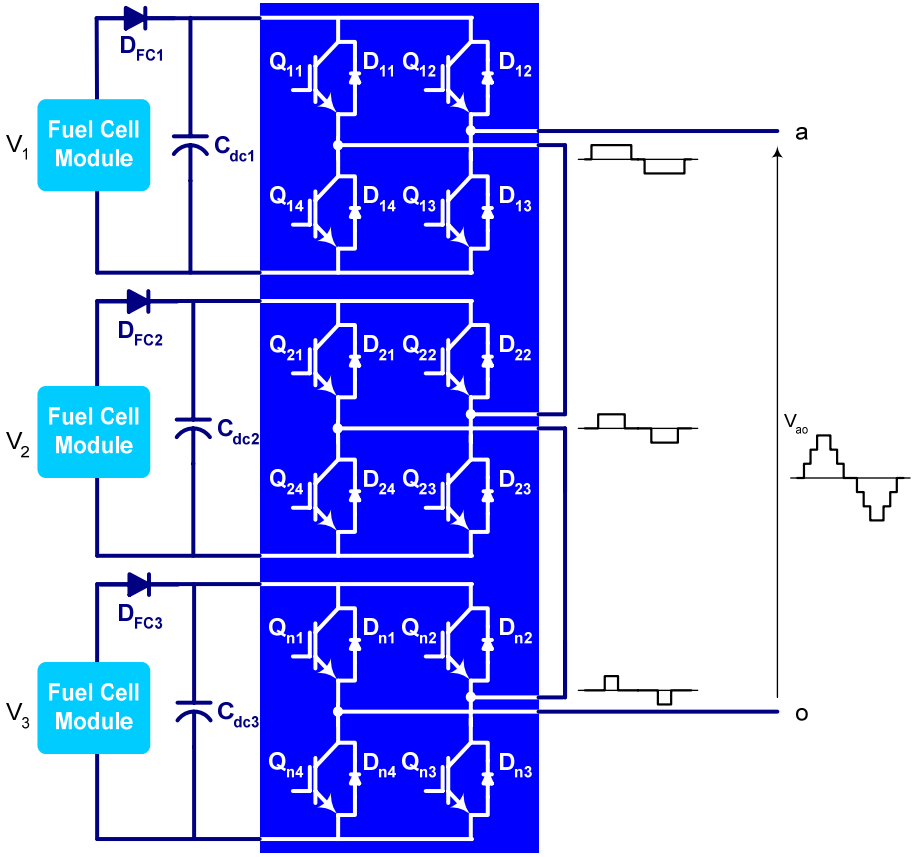

Plug and Play Solar Power Generation
- integrating power conversion with solar panels

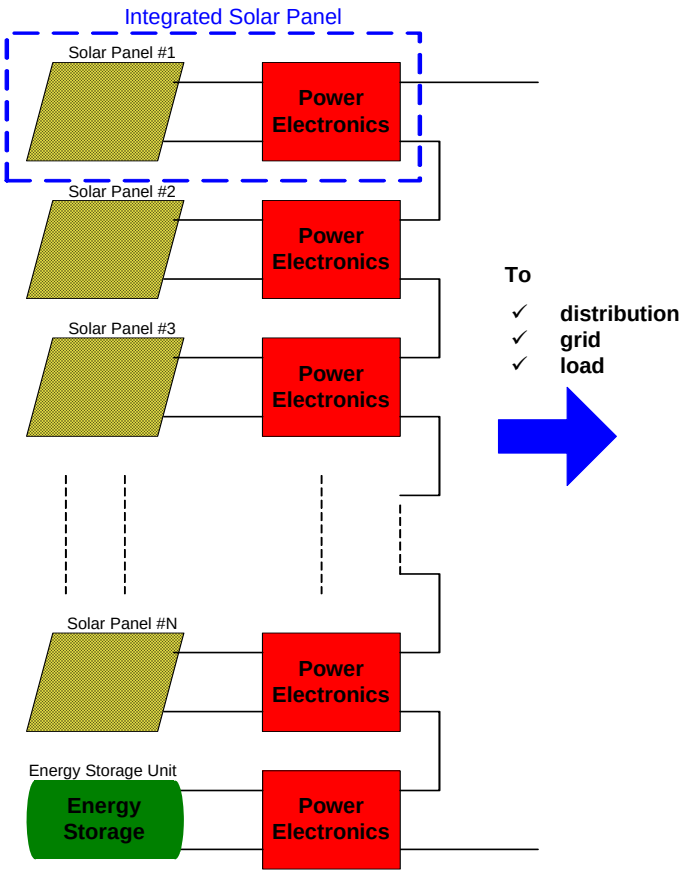

Technical Goals:

- Increase the reliability and modularity while decreasing the cost of the system.
- Ensure continuous availability of power.
- More scalability.

Approach:

- Trade study for aggregation of solar panels using integrated power electronics.
- SiC power devices and their impact on solar power conversion.
- Reconfigurable solar power systems.
- Fault tolerant operation.
- Energy storage and back-up power interface (batteries, H_2 production, etc.)

Multifunctional Module

- **Module will be multifunctional and pre-programmed with a suite of control algorithms so that it is capable of performing multiple tasks or ancillary services.**
  - **Power flow control**
  - **Voltage regulation**
  - **Instability damping**
  - **Power factor correction**
  - **Active filter for harmonics**
  - **Sag compensation**
  - **Grid-connect / stand-alone**
- **Analogous to personal computer that can perform many tasks.**

System Topology of Demonstration Module

- **Layered system topology**
- **Self - synchronization**
- **Scalable and easy integration**
- **Dual loop control structure-switching control loop and data loop**
- **Self-communication fault diagnostic**

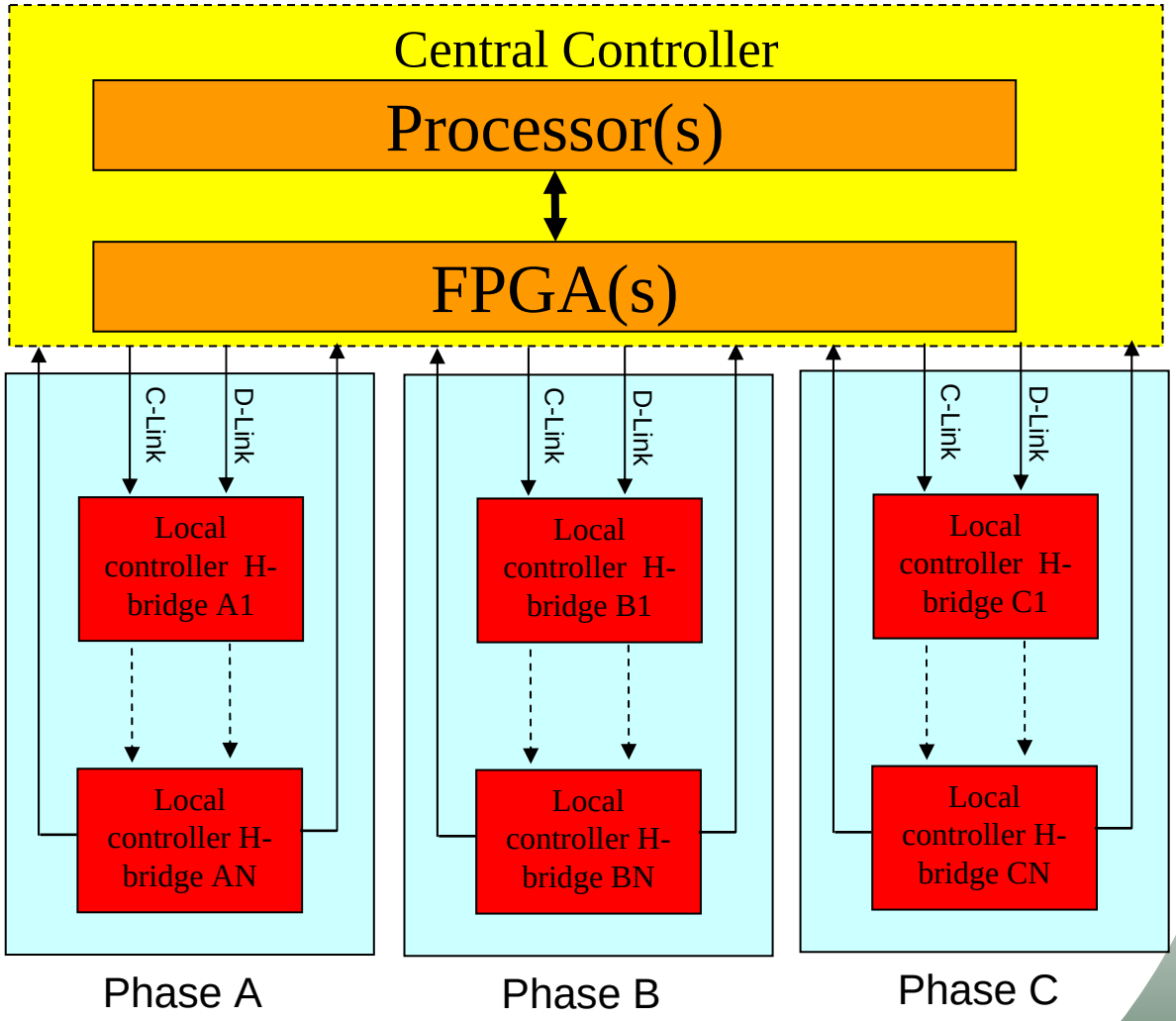

Proof-of-Concept Prototype Work

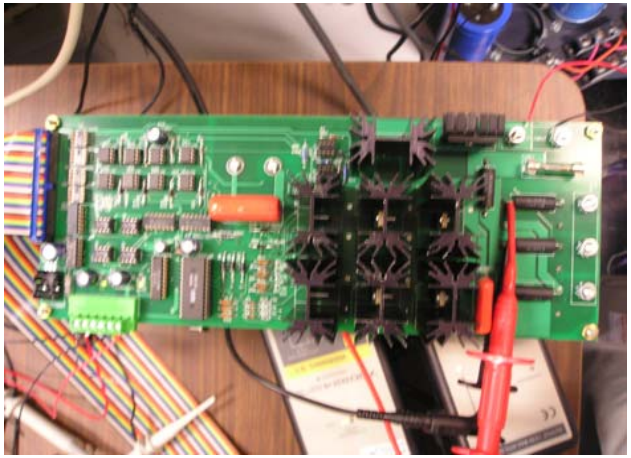

H-Bridge Module

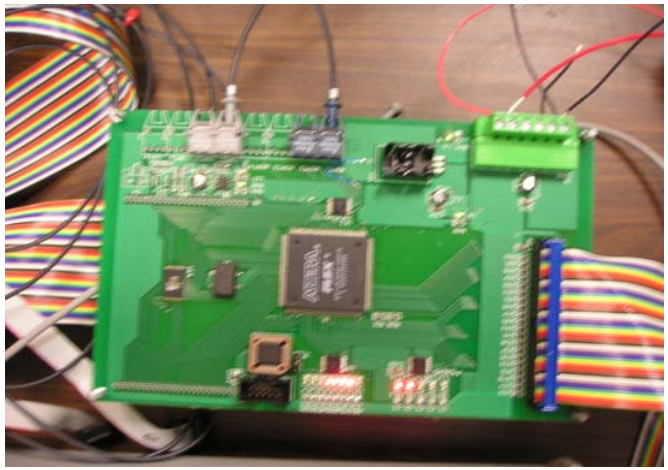

Modular Controller

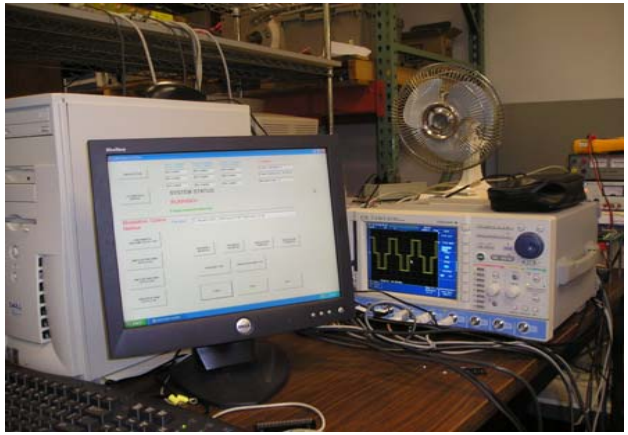

Bench Setup

Bench Testing Interface
Four Modulation Control Methods
(Control Link Is Working)

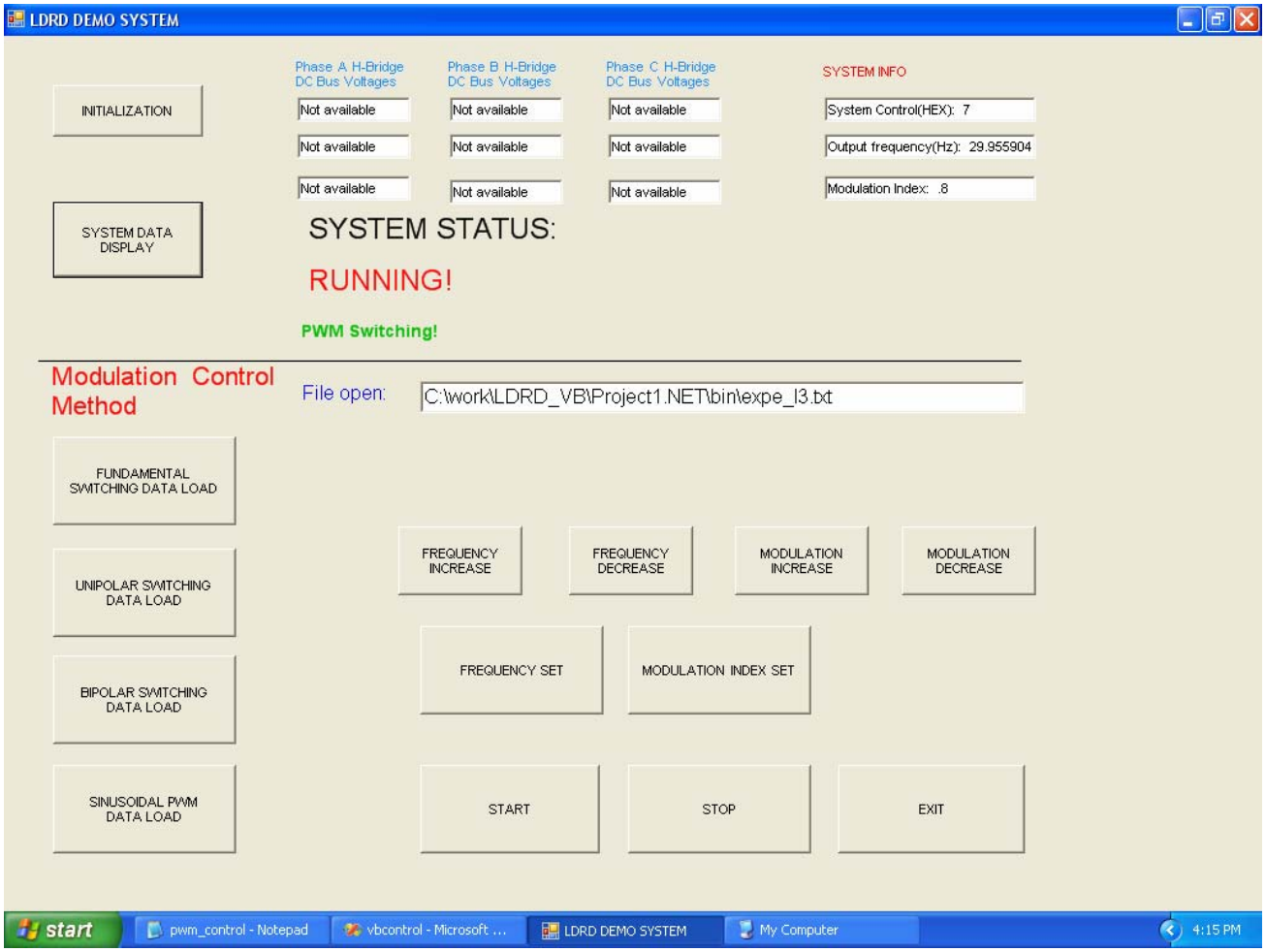

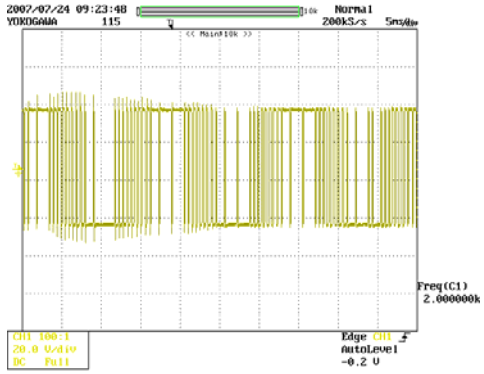

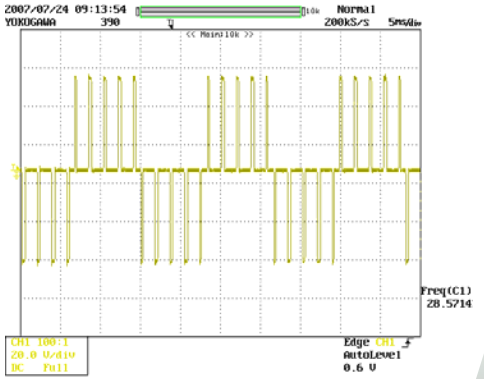

Fault Protection Circuits

Desired features of a fault protection circuit:

- **Shutdown device before it fails**
- **Limit peak fault current to reduce the device stress**
- **Insensitive to noise and transient overcurrent trips**
- **Provide protection for both Hard Switched Fault (HSF) and Fault Under Load (FUL)**
- **Not affect the switching and conduction performance of IGBT**
- **Inexpensive and simple to implement**

Fault Protection Circuits

Hard Switch Fault Protection (HSF)

- **HSF protection involves two steps:**
  - **limiting the fault current**
  - **soft-turn-off the device**
- **Fault current limiting is achieved by varying the gate drive voltage.**
- **Short-circuit (SC) saturation current decreases with decreasing V_{ge}. SC withstanding time t_{sc} *is reduced with increase in SC current.***

$$t_{sc} \propto \left(1/V_{sc} * I_{sc}\right)$$

Fault Under Load Protection (FUL)

- **FUL type of fault involves a dynamic surge current at the time of fault. This causes the collector voltage (V_{ce}) to rise with large dv/dt.**
- **The current limiting for FUL type of fault is achieved by varying the $R_{g\text{-}off}$. Smaller resistance provides a low impedance path and shunts the gate-collector current effectively limiting the peak current.**

$$I_{sc} \propto \left(1/R_{goff}\right)$$

Fault Protection Circuits - HSF

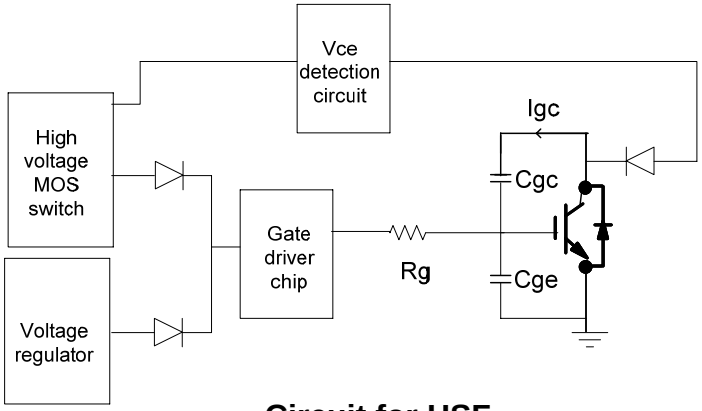

Circuit for HSF

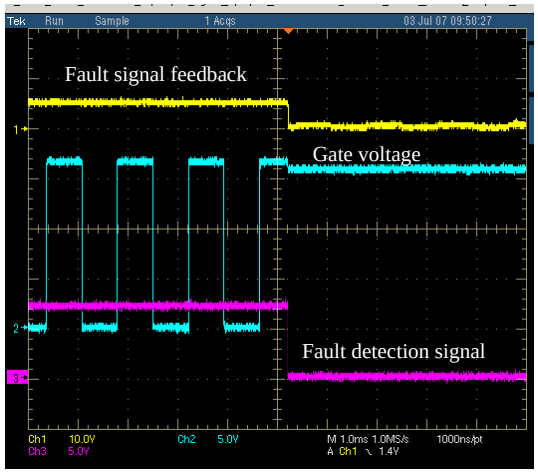

(a)

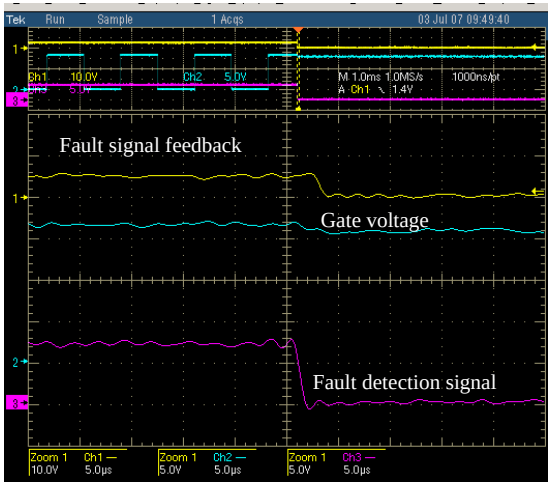

(b)

Test results of the protection circuit : 2a). Normal view, 2b). Zoomed view.

- **Fault current detection is achieved by sensing the Vce across the device.**
- **Blanking time capability prevents nuisance trips because of transient currents.**
- **Wide range of on-state voltage drop between (0-7 V) and under voltage gate protection feature.**
- **The gate voltage is clamped to the preset voltage until the controller commands the turn-off the gate signal.**
- **The gate voltage starts to decrease even before the fault signal is active.**

Fault Protection Circuit – FUL

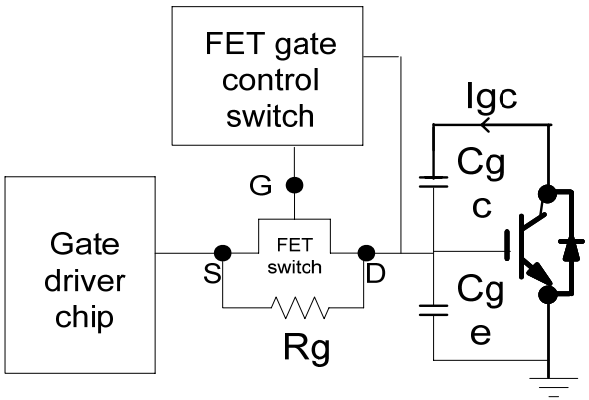

Circuit for FUL

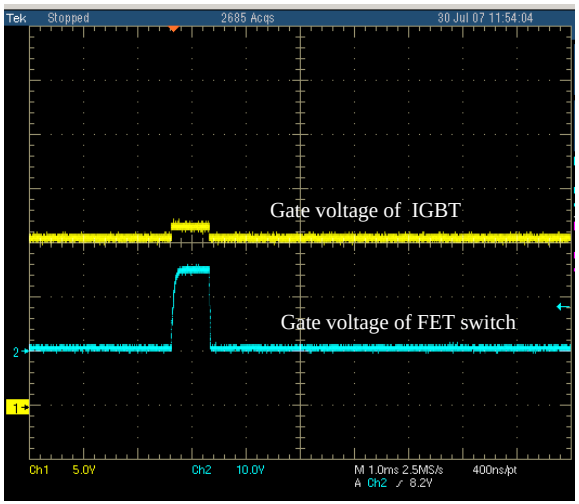

(a)

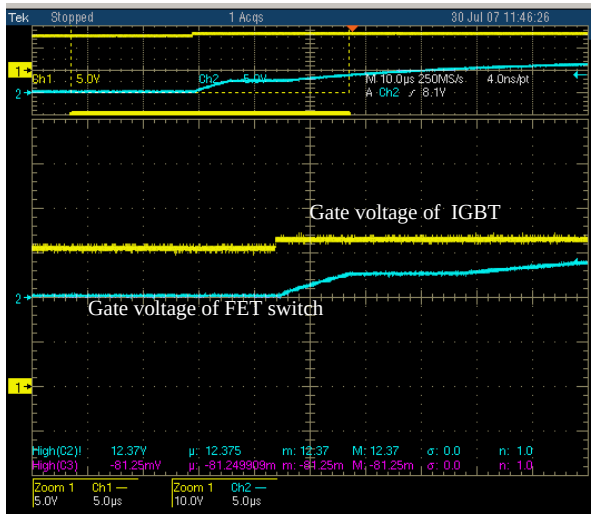

(b)

Test results of the protection circuit : 2a). Normal view, 2b). Zoomed view.

- **Fault current detection is achieved by sensing the V_{ge} across the device (IGBT).**
- **The threshold gate voltage can be varied by adjusting the reference voltage.**
- **The fault detection and fault limiting time is less than 0.7 us.**
- **The FET switch stays on till the gate voltage is higher than the set threshold value.**

Packaging for High Reliability

- **Material combinations must be stable during high temperature exposure with a minimum of interdiffusion and tendency to form deleterious intermetallic compounds.**
- **Have had high-temperature packaging of SiC JETs provided by SemiSouth.**
- **Packaged devices will be tested at different temperatures to evaluate their electrical characteristics and to guide packaging efforts in FY 2008.**

Oak Ridge National Laboratory

Future Work on Modular Converter

- **Data Link – communicate measured data (voltage, current) to central controller.**
- **System Configuration – Develop multifunction software algorithms for various utility applications:**
  - **STATCOM**
  - **DG Interface**
  - **Motor Drive**
  - **Active Filter**
- **Fault Diagnostic – Integrate HSF/FUL circuit into module**
- **Low Power Demonstration**

Future Work on Fault Protection

- **Test integrated HSF and FUL circuits with an IGBT with different fault scenarios.**
- **Study the device transients for designing snubber circuits to integrate into module to increase reliability.**
- **Model effects of utility system faults on power electronic converters.**

Future Packaging Work

- **Packaged devices will be evaluated for high temperature materials stability and reliability.**
- **Designs without wire bonds will be considered.**
- **Components for “flip chip packaging” will be evaluated.**
- **Most appropriate design will be down-selected or components for new designs will be fabricated.**
- **Power FET will be packaged using “flip chip” design and will be characterized for electrical properties and high temperature stability.**

Modular Converter - Summary

- **Modular converter will help to increase production volumes and standard designs will lead to lower installation costs.**
- **Multifunctional converter can be used for several applications instead of custom designed for one and only one use.**
- **Fault current limiting and/or protection is an important feature to increase reliability of converter and gain utility acceptance.**
- **Better packaging can increase reliability and reduce thermal management issues.**
- **Needed to lower DG installation costs and high power utility applications (FACTS).**