Unique Challenges Associated with DE and Possible Solutions

Dr. Engin Ozdemir

Visiting Professor to the University of Tennessee and ORNL

Representing the Kocaeli University from Turkey

Outline

- **Types of Distributed Energy Sources (DE)**
- **Voltage regulation and unique challenges**
- **Special needs of PV & fuel cells**
- **Multilevel inverter as a solution**
- **New instantaneous non-active power technique**
- **Unbalanced compensation**
- **Simulation studies & results**
- **Conclusions**

Types of Distributed Energy Sources (DE) for Voltage Regulation

Types of DE

- **Inverter-based**
  - **Micro-turbine**
  - **Fuel cell**
  - **Photovoltaic (PV)**
- **Rotating-based**
  - **Industrial gas turbine**
  - **Reciprocating engine generator**
  - **Wind turbine**

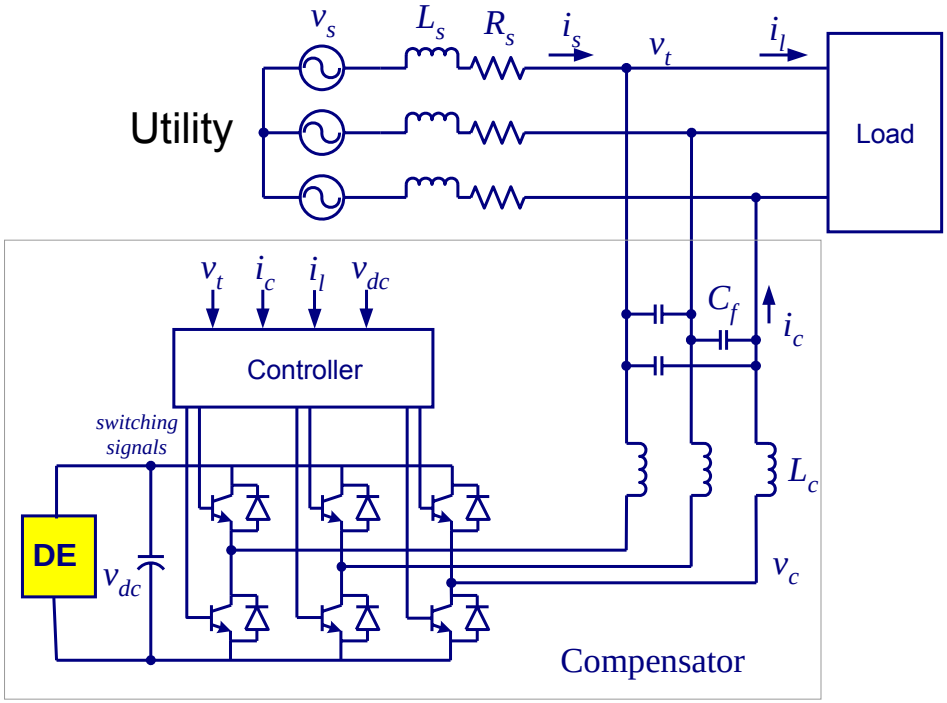

Characteristics of DE

- **Power electronic (PE) interface is required for most DE – providing DE with capability to provide ancillary services with the right controls.**
- **DE connected to utility system near load is ideal for many ancillary services.**
- **Voltage regulation from DE can have a beneficial impact on transmission stability & distribution system capacity & losses.**

Ancillary services possible from DE

- Dynamic voltage regulation
- Unbalanced compensation
  - Unbalanced source voltage compensation
  - Unbalanced load current compensation
- Reactive power compensation
- Power factor correction
- Harmonics compensation

Unique Solutions Possible with DE

Reactive power compensation

- Capacitors are used widely, but don't provide dynamic reactive power
  - Fixed or time controlled capacitor banks can lead to lagging power factor during low loads
  - Capacitor switching can cause voltage transients and also voltage magnification when capacitance matches system inductance
- Reactive power compensation with DE is more effective than capacitor-based compensation
  - Reactive power compensation with capacitors is decreased by voltage squared and thus degrades at lower voltage when it is most needed
  - DE in comparison can provide reactive power compensation continuously and without degradation when the voltage drops
- Future black outs might be prevented by sufficient DE installation
  - Lack of reactive capacity or transport has been one of the leading causes for major cascading outages
- Local voltage support and control will be required to avoid voltage instability
  - DE can supply reactive power based on maintaining local voltage schedules
  - DE can supply reactive power to boost voltage or absorb reactive power to lower voltage

Unique Solutions Possible with DE

PV modules and Fuel Cells can produce DC voltage suitable for DE applications.

- **The output from PVs must be optimized for insolation and temperature, etc.**
- **Fuel Cells do best when operated at fixed levels above 50% without ramping**

PV Power Trend in USA

Lower costs and incentives are driving some of this growth

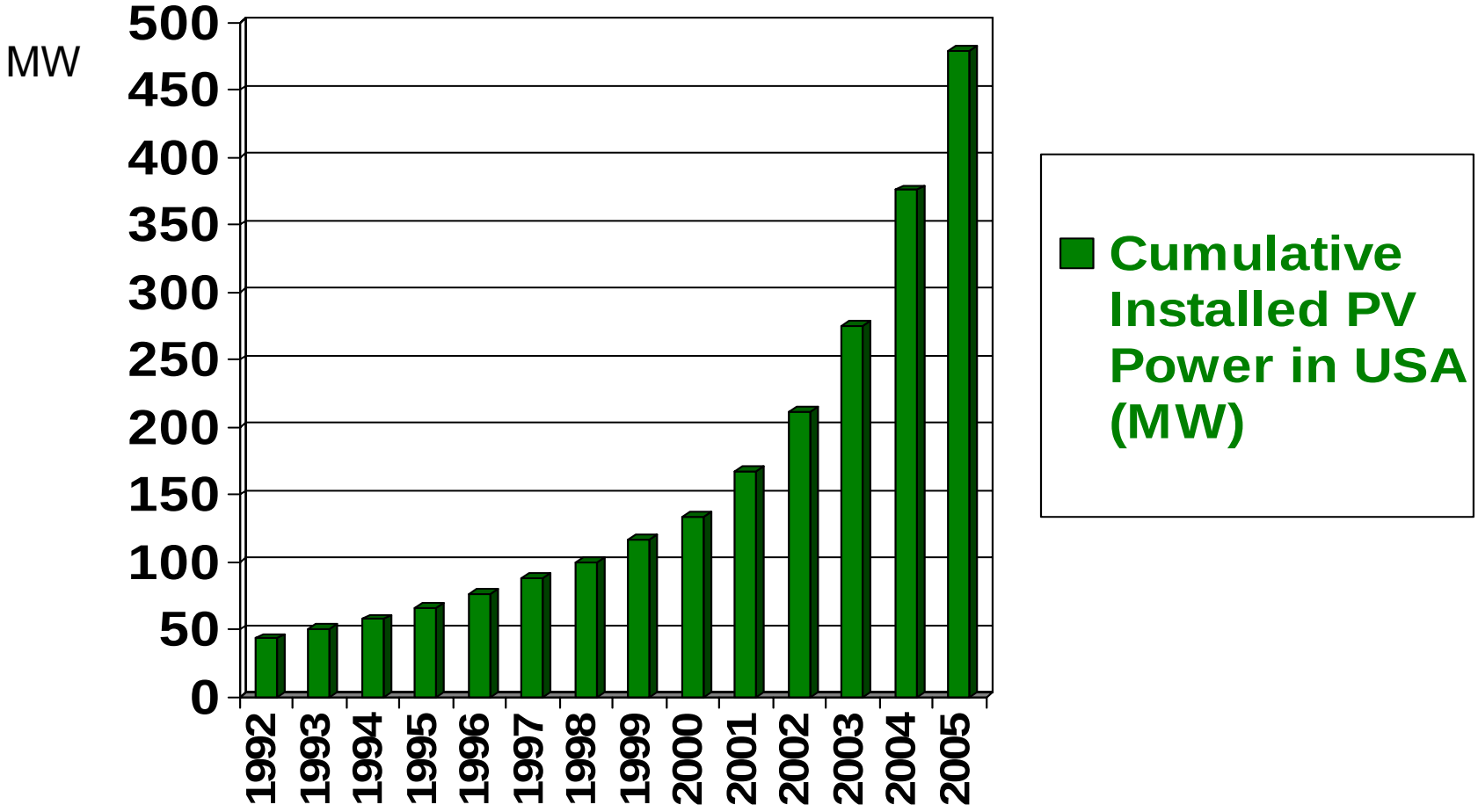

Trends in Photovoltaic Applications Survey report of selected IEA countries between 1992 and 2005.

Total PV Power Installed in IEA in 2005

Off-grid PV Capacity (MW)		Grid-connected PV capacity (MW)		Total installed PV power (MW)	PV Power installed in 2005 (MW)	Grid-connected PV power installed in 2005 (MW)
domestic	Non-domestic	distributed	centralized			
202	**311**	**3,022**	**160**	**3,696**	**1,092**	**1,039**

Installed PV power in reporting International Energy Agency (IEA)* member countries as of the end of 2005.

**IEA includes the US, Europe, Turkey, Japan, Canada, Australia, South Korea*

Multilevel Inverter is an optimal converter type for DE integration

Staircase waveforms can be produced

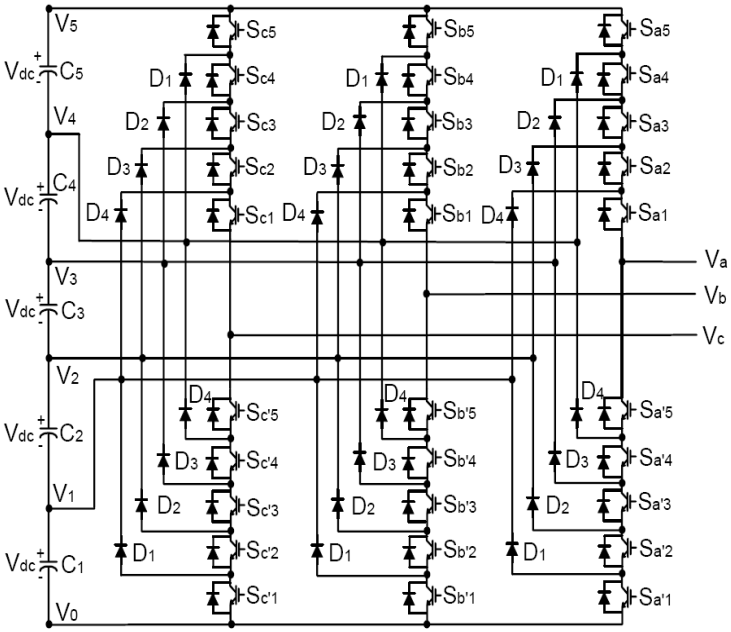

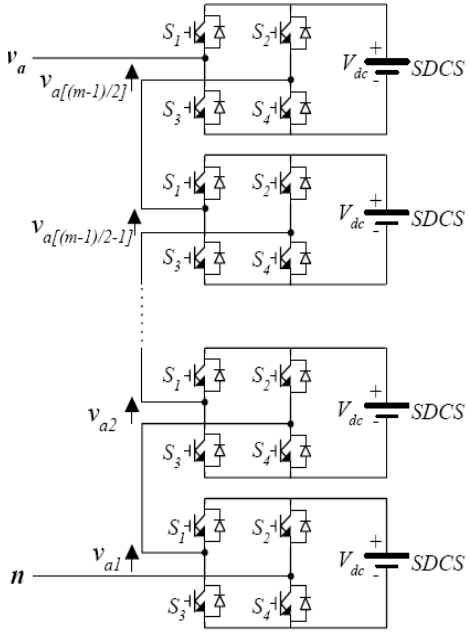

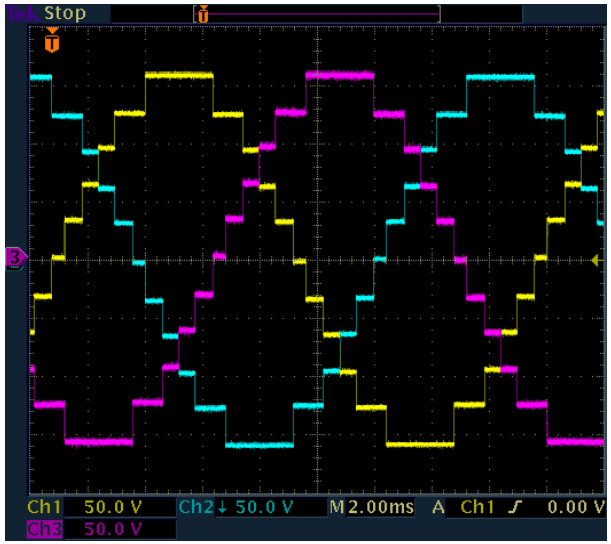

Diode-clamped and cascaded H-bridge multilevel inverters

The possibility for several sources on the dc side of the converter makes multilevel inverter technology attractive for DE applications which require control of DC voltage.

Multilevel Inverter Integration for High Power

Renewable energy sources such as photovoltaic and fuel cells can be easily interfaced to a multilevel inverter for a high power application

Advantages:

- Staircase waveform quality with low distortion
- Input current with low distortion.
- Operate at both fundamental frequency and PWM

Disadvantages:

- Greater number of switches are needed
- Overall system more expensive and complex.

Instantaneous Non-active Power Theory (I)

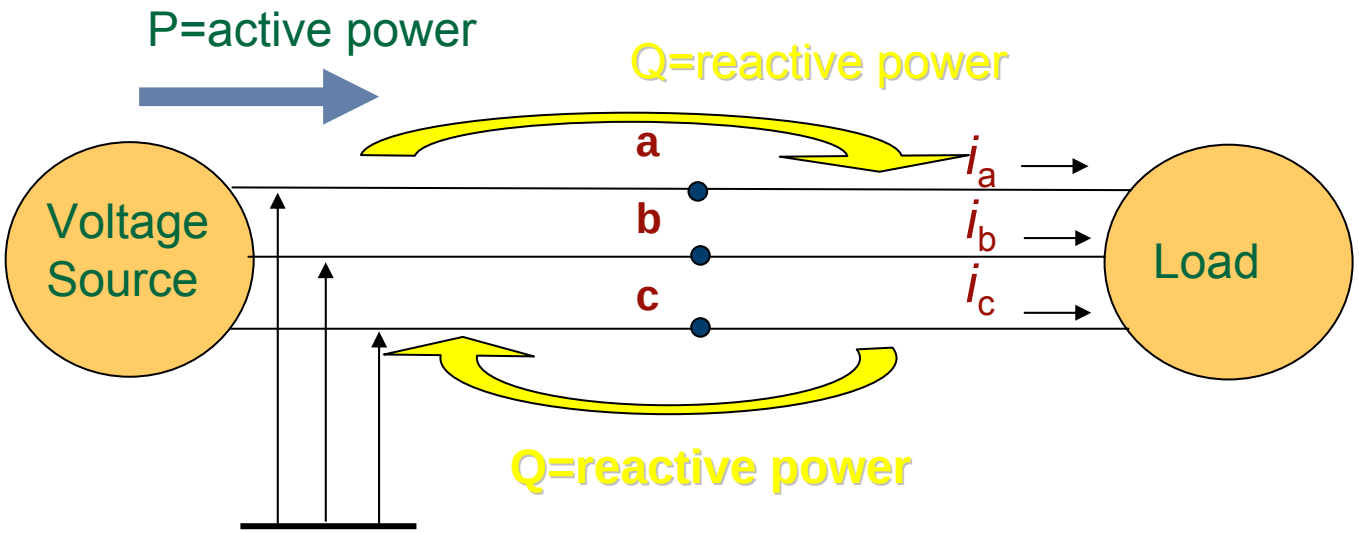

Active Power provides energy that does real work while non-active power, such as reactive power, provides stored energy for electric fields in motors.

ORNL has developed a new definition for instantaneous power. All of the following are defined:

- Instantaneous, average and apparent active current
- Instantaneous, average and apparent non-active current

The theory is adopted for the real-time analysis and control of DE ancillary services in this study.

Instantaneous Non-active Power Theory (II)

- **Instantaneous Non-active Power Theory** is different from conventional theory since it does not have the same limitations:
  - Not limited by the number of the phases
  - Voltage and current can be sinusoidal or non-sinusoidal
  - Waveforms can be periodic or non-periodic
  - Other theories have above limitations.
- The Instantaneous Non-active Power theory is valid for
  - Single-phase or multi-phase systems
  - Sinusoidal or non-sinusoidal systems
  - Periodic or non-periodic systems
  - Balanced or unbalanced systems
  - Ideal for real-time calculations and control

Benefits of Instantaneous Non-active Power Theory (I)

- The definitions can be used for control of DE non-active-power-related ancillary services including:
  - Non-active power compensation,
  - Power factor correction,
  - Voltage and/or current unbalance compensation,
  - Harmonics compensation,
  - Voltage regulation.

- The theory can be used for rotating and PE based DE.

- The only limitations is that rotating-based devices can't address all non-active power (harmonics, unbalance, etc.) as the inverter unless they are single-phase and will be much slower.

Benefits of the Instantaneous Non-active Power Theory (II)

- **Three of the ancillary services are achieved by controlling the current of the compensator*:**
  - **Non-active power compensation,**
  - **Current harmonics compensation,**
  - **Current unbalance compensation.**
- **The compensator current can be controlled so that the utility current is fundamental sinusoidal, unity power factor and balanced.**

*The broad term of compensator is used to represent the power-electronics based DE.

Instantaneous Non-active Power Theory Definitions (I)*

Voltage and current in a three-phase system:

$$\boldsymbol{v}(t) = [v_1(t), v_2(t), v_3(t)]^T \qquad \boldsymbol{i}(t) = [i_1(t), i_2(t), i_3(t)]^T$$

Instantaneous power and average power:

$$p(t) = \boldsymbol{v}^T(t)\boldsymbol{i}(t) = \sum_{k=1}^{3} v_k(t) i_k(t) \qquad P(t) = \frac{1}{T_c}\int_{t-T_c}^{t} p(\tau)d\tau$$

- T_c is the averaging interval.
  - In a periodic system with period T, T_c = kT/2, k = 1, 2, 3, …
- The average power *P(t)* is a variable changing with time.

*Mathematical definitions of the theory are shown.

Instantaneous Non-active Power Theory Definitions (II)

Instantaneous active current and non-active current:

$$\boldsymbol{i_a}(t) = \frac{P(t)}{V_p^2(t)}\boldsymbol{v_p}(t) \qquad \boldsymbol{i_n}(t) = \boldsymbol{i}(t) - \boldsymbol{i_a}(t)$$

RMS value of the reference voltage:

$$V_p(t) = \sqrt{\frac{1}{T_c}\int_{t-T_c}^{t} \boldsymbol{v_p^T}(\tau)\boldsymbol{v_p}(\tau)d\tau}$$

- $v_p(t)$ is the reference voltage & $V_p(t)$ is the RMS value of $v_p(t)$.
  - $v_p(t)$ could be the system voltage itself,
  - or another reference, based on compensation objectives.
- $i_a(t)$ is the active component in current i(t),
- $i_n(t)$ is the non-active component in current i(t).
  - $i_a(t)$ and $i_n(t)$ are orthogonal.

Instantaneous Non-active Power Theory Definitions (III)

RMS values:

$$V(t) = \sqrt{\frac{1}{T_c}\int_{t-T_c}^{t} \boldsymbol{v}^{\boldsymbol{T}}(\tau)\boldsymbol{v}(\tau)d\tau}$$

$$I(t) = \sqrt{\frac{1}{T_c}\int_{t-T_c}^{t} \boldsymbol{i}^{\boldsymbol{T}}(\tau)\boldsymbol{i}(\tau)d\tau}$$

$$I_a(t) = \sqrt{\frac{1}{T_c}\int_{t-T_c}^{t} \boldsymbol{i}_{\boldsymbol{a}}^{\boldsymbol{T}}(\tau)\boldsymbol{i}_{\boldsymbol{a}}(\tau)d\tau}$$

$$I_n(t) = \sqrt{\frac{1}{T_c}\int_{t-T_c}^{t} \boldsymbol{i}_{\boldsymbol{n}}^{\boldsymbol{T}}(\tau)\boldsymbol{i}_{\boldsymbol{n}}(\tau)d\tau}$$

- $I_a(t)$ is the active current RMS value
- $I_n(t)$ is the non-active current RMS value
- Average & RMS values in the instantaneous non-active power theory are variables changing with time
- These definitions are suitable for real-time control & calculation and have been implemented in our simulations and tests.

Unbalanced compensation

- **In reality, neither the grid voltages nor the loads are balanced.**
- **Unbalances cause numerous problems such as:**
  - **Additional losses and overheating of transformers**
  - **Shortened equipment life**
  - **Higher noise, oscillatory torque, and mechanical stress in rotating machines**
  - **Interference with communication networks**
  - **Malfunction of sensitive electronic equipment etc.**
- **Therefore, it is vital for power electronics based DE to be able to handle unbalanced sources and/or loads.**
- **A DE can perform both current and voltage unbalance compensation, either individually or together, depending on the compensation objectives.**

Unbalanced Voltage and Current Compensation

- **<u>Unbalanced Voltage(s):</u>**
  - **Caused by other loads or generators or phase imbalances in the system**
  - **Results in unbalanced load current even the load is balanced.**
- **<u>Unbalanced Current(s):</u>**
  - **Caused by the load not being balanced**
  - **Results in unbalanced voltage at the service panel (source)**
- **A grid-interfaced Power-electronic-based DE can compensate the unbalanced voltage by controlling the magnitudes and phase angles of the individual phases.**
- **The DE can perform both current and voltage balance compensation with proper control schemes.**

Simulation of Unbalance Load Compensation

In an unbalanced load current condition, balanced voltage and current are desired

Unbalanced load currents lead to unbalanced load voltages

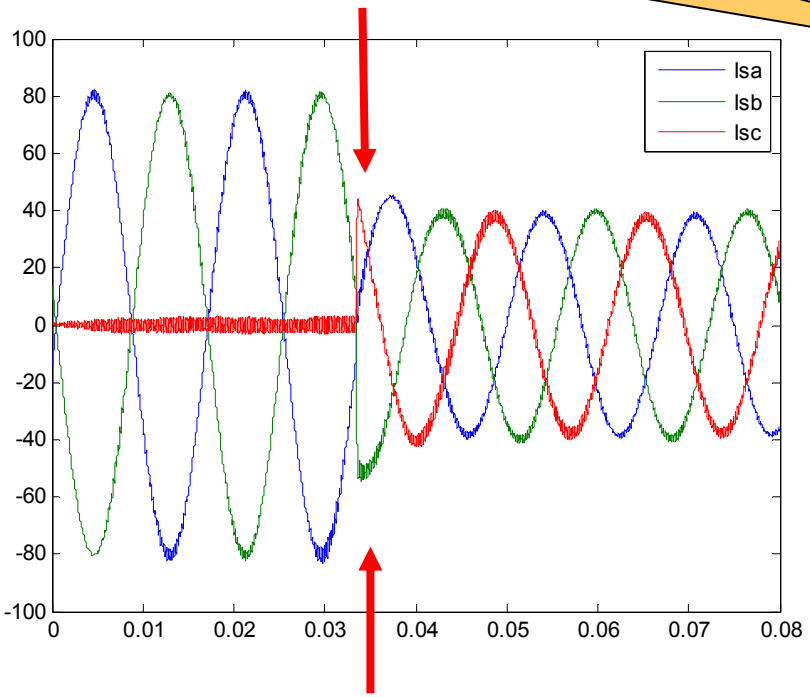

Unbalanced source currents
(load compensation starts at 0.35 second)

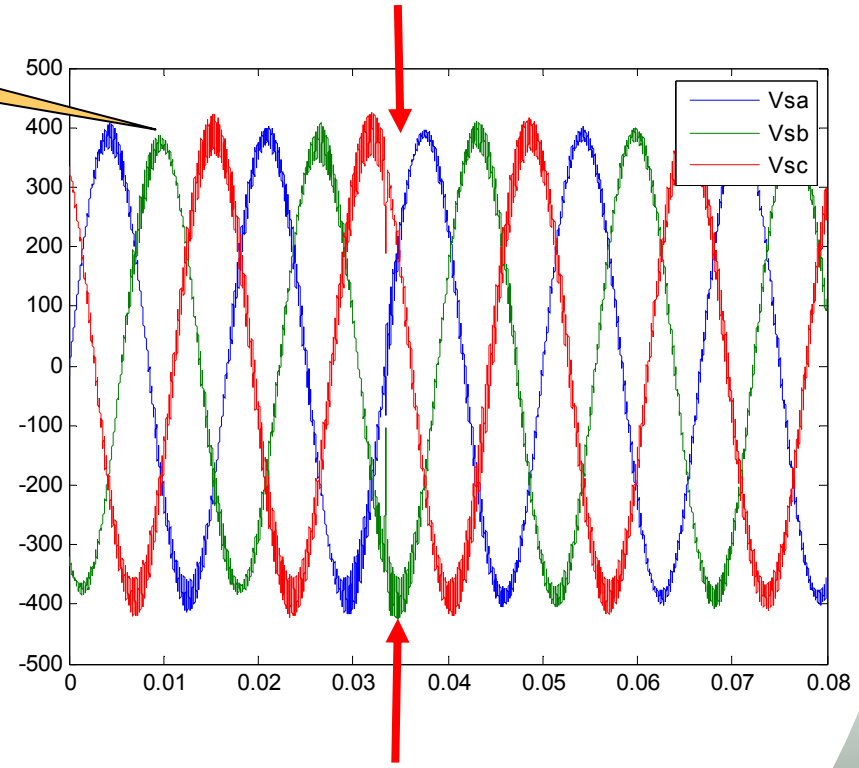

Source voltages before and after compensation of unbalanced load current condition

Loss of a phase is severe case which is proof of principle

Simulation of Unbalanced Voltage Compensation and Reactive Power Compensation

Three-phase source voltages and source current (phase a only) before and after compensation in unbalanced voltage source condition.

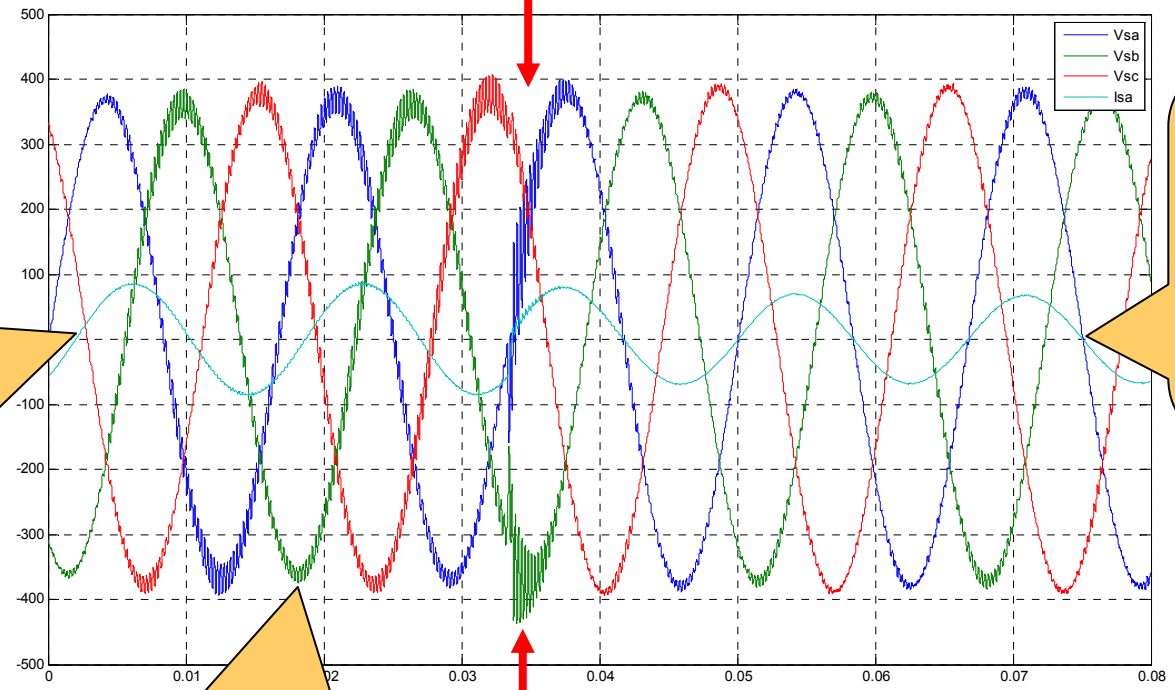

Power factor before compensation

Power factor after compensation*

Unbalanced source voltage

load compensation starts at 0.35 second

*Corrected to unity (1.0) power factor; no reactive power demanded from the system.

Simulation Results

- **With the proposed new definitions and control algorithm, power electronic-based DE has the following features:**
  1. **<u>When the three-phase line voltages are balanced:</u> the line currents will be sinusoidal and follow the zero-sum components of the line voltages, the DE can control its reactive power output to raise or lower the local voltage to maintain a reference level.**
  2. **<u>When loads are unbalanced:</u> the DE can automatically generate non-active (harmonic and unbalanced reactive) currents to cancel those from unbalanced loads to keep the line currents balanced and at unity power factor.**

Conclusions

- **Using our developed instantaneous non-active power theory, ancillary services can be provided by DE.**
- **DE can perform real-time local voltage regulation by controlling reactive power compensation to maintain a voltage reference.**
- **PV modules and Fuel Cells can produce DC voltage suitable for DE applications but their operating limitations need to be considered.**
- **The multilevel inverter, together with the new definitions will be extremely powerful in solving common distribution system problems.**
- **Future black outs might be prevented by sufficient DE installation in the power system.**