Voltage Regulation with Multiple Distributed Energy Systems: Challenges, Solutions, & Vision

Fran Li, Ph.D., P.E.
UT/ORNL

DECC Meeting
October 11th, 2007

Introduction

- **Future distribution systems may contain multiple distributed energy resources (DE) with flexible Var capability.**
- **Local dynamic voltage regulation is possible**
  - **Conventional synchronous condensers**
  - **Generator-based DEs**
  - **Inverter-based power electronic DE interface to the grid**
- **Challenges arise on how to coordinate the control of multiple DEs**
  - **Want stable dynamic process**
  - **Optimal parameter settings for most effective control**
- **Vision of future DE control**
  - **Scalable, Autonomous and Adaptive**
  - **Minimal to zero communications preferred**

Possible Multiple DE Configurations

Parallel Operation

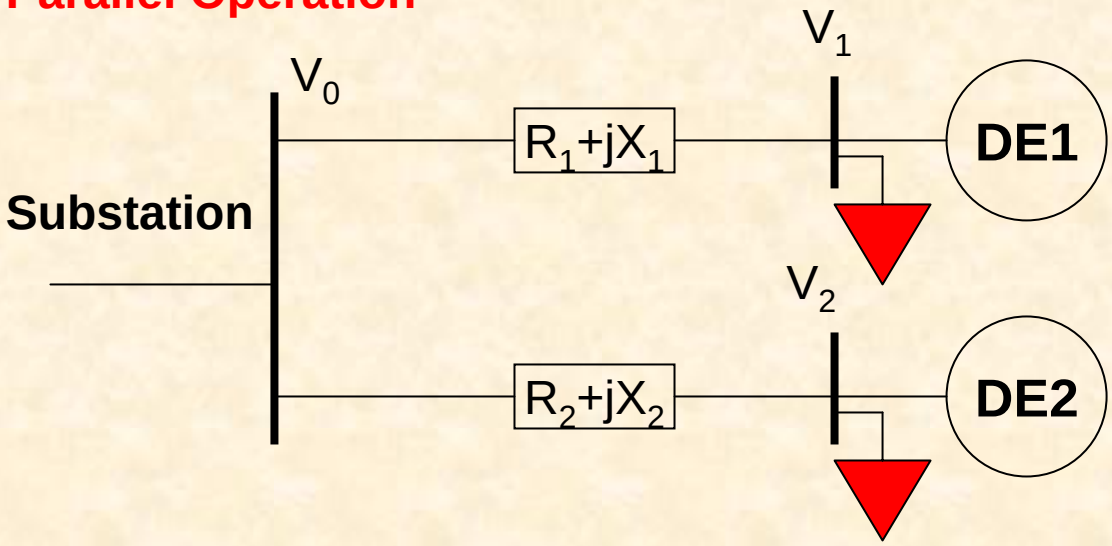

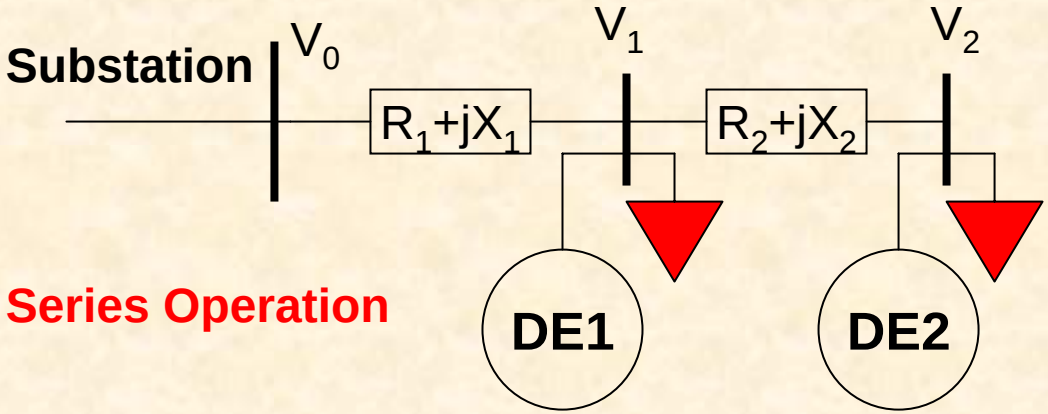

Series Operation

Voltage Schedule (1)

- **If the voltage schedules are given at each controlled bus, there is a unique steady-state solution.**
  - **Proven as in power flow theory.**
  - **The amount of how much Var injection from each DE is unique.**

- **Voltage schedule settings (based on offline study)**
  - **Take load duration curve**
  - **Consider Var injection & absorption cases**

Voltage Schedule (2)

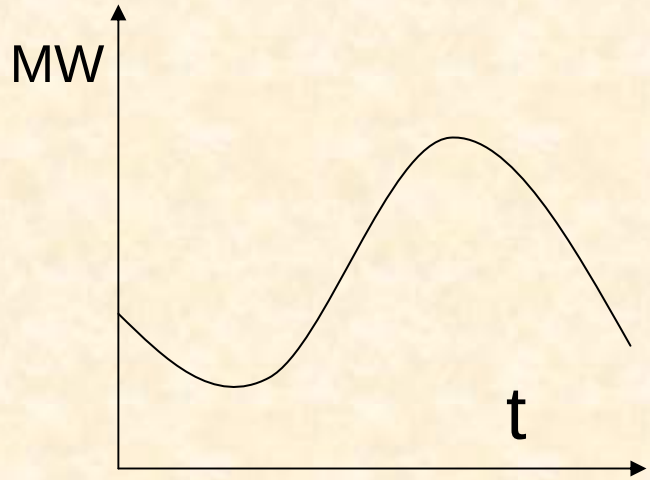

Chronological Load Curve

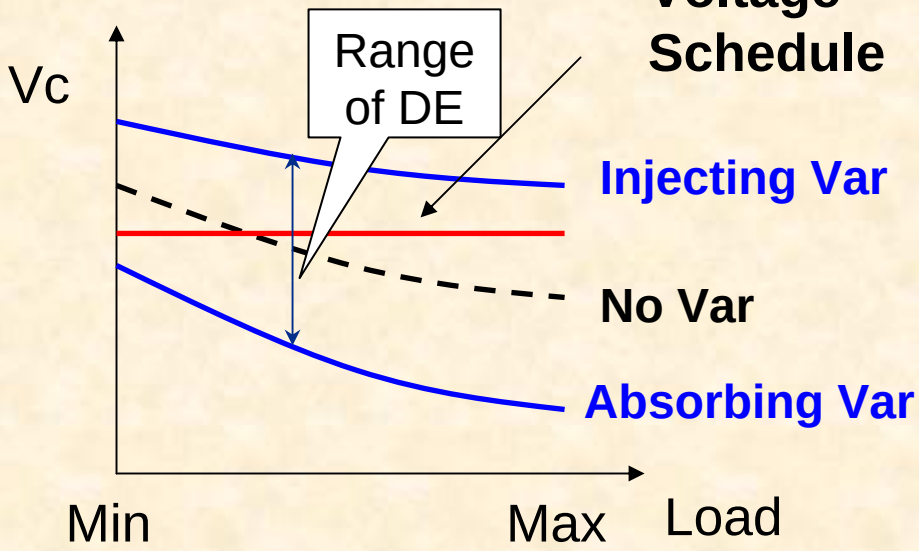

Voltage vs. load

- **Same approach can be applied to different patterns (weekdays vs. weekends, summer vs. winter, etc.)**
- **Requirement of different systems may vary.**
- **DE can provide Var output over entire range while capacitor banks can only provide in steps**

Voltage Control Challenges

- **The steady-state solution is unique for each loading case.**
- **But there could be many different transitions (dynamic processes), depending upon the control parameter settings.**
- **Challenges: Possibility of an instable or slow transition if control parameters are not in the appropriate range; such as over/undershoot of control response**
- **Eventually, an optimal combination of different control parameters are desired.**

Simulation Study of System with Multiple DERs

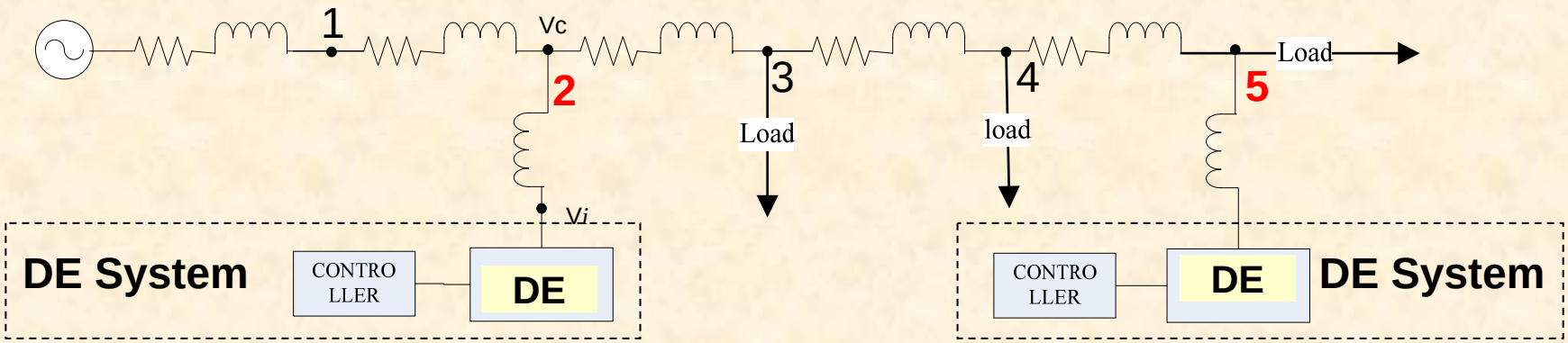

One-line diagram of the test system

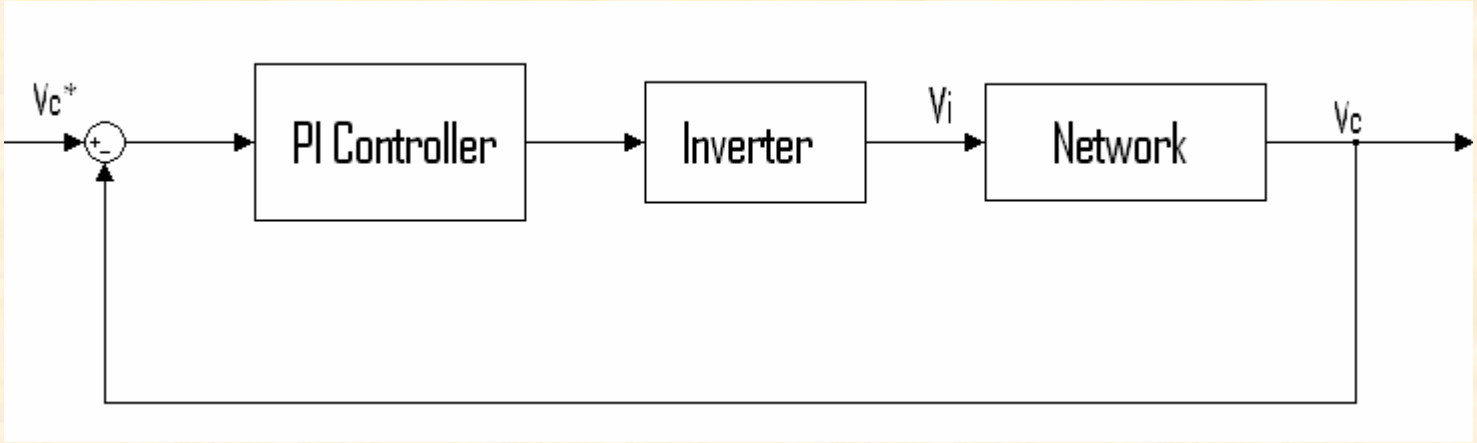

Illustrative Diagram of the DE compensator system

Simulink Model of DE connected to distribution system

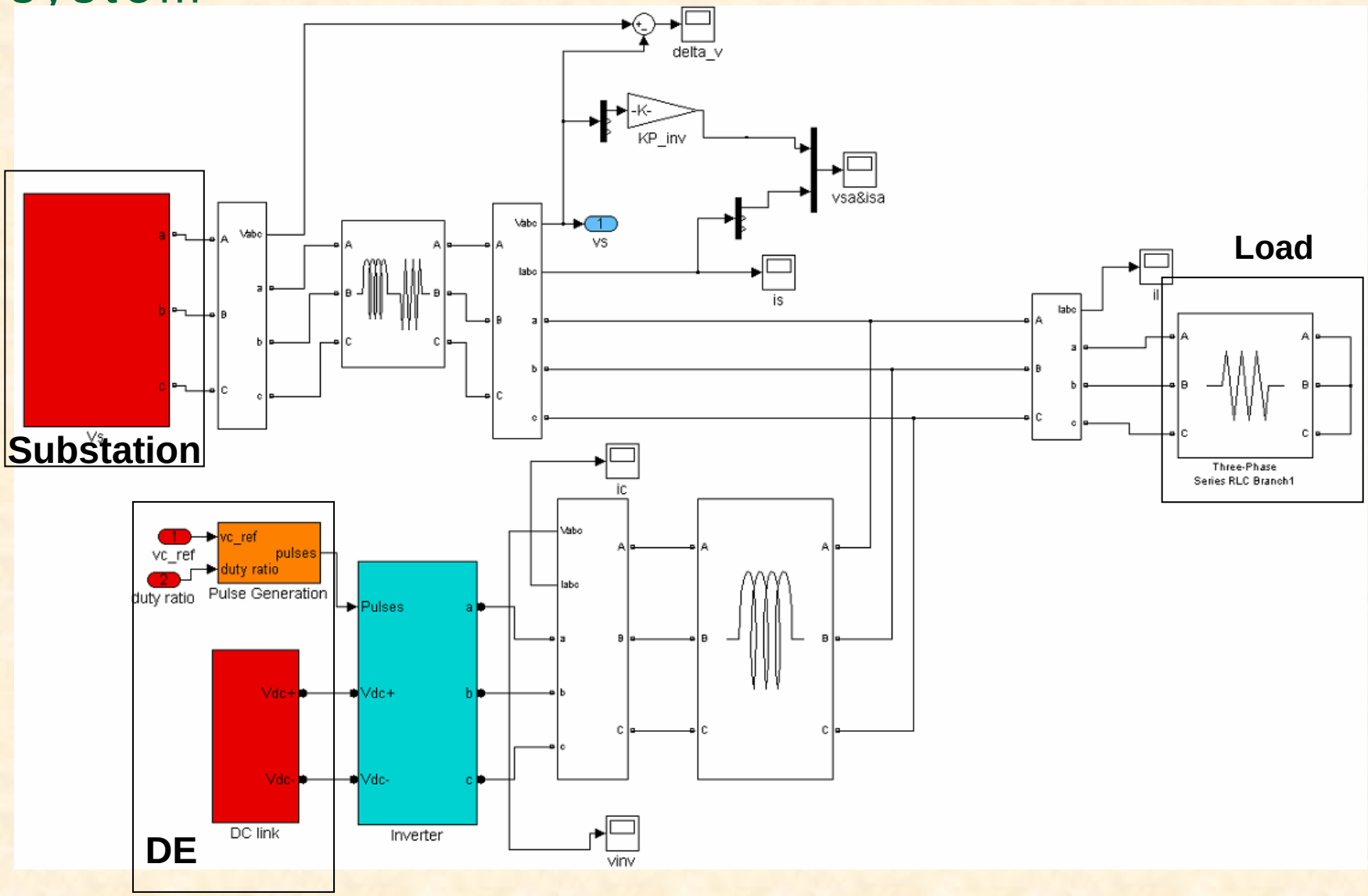

DE Voltage Response vs PI Control Parameters: Only a Single DE at bus 2

268

263

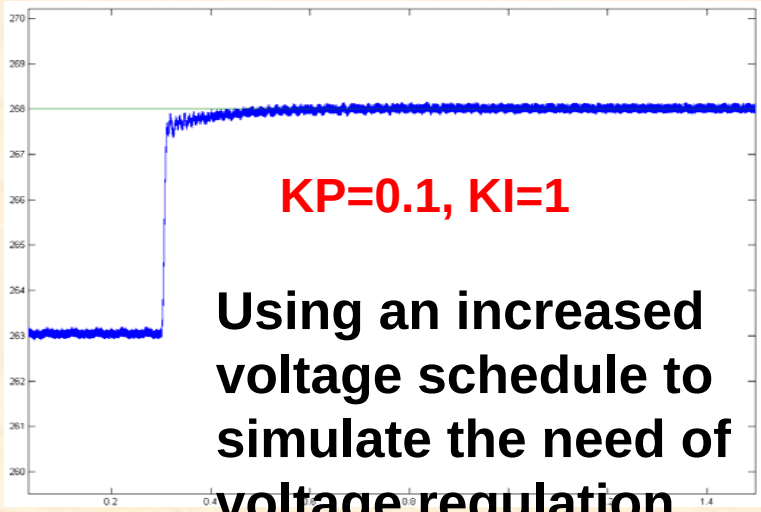

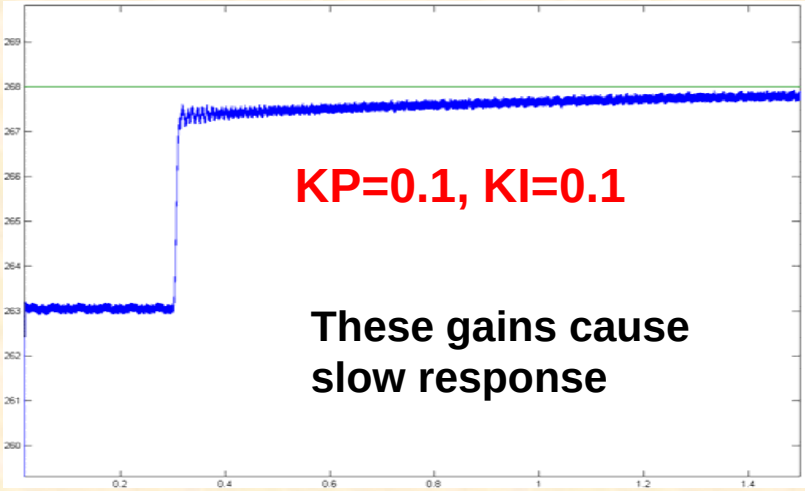

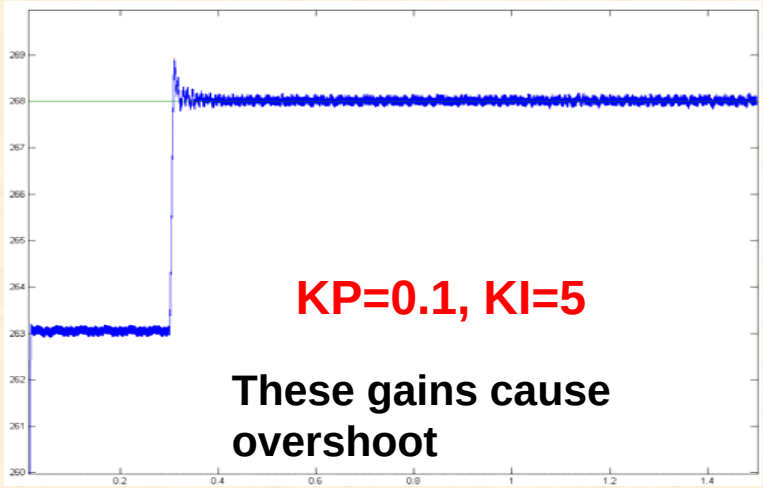

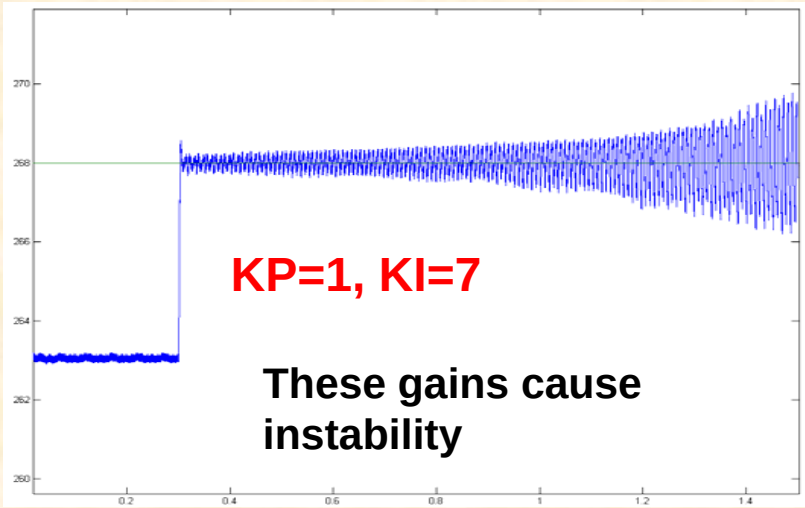

Voltage Response vs PI Parameters: 2 DEs

DE at Bus 2 | **DE at Bus 5**

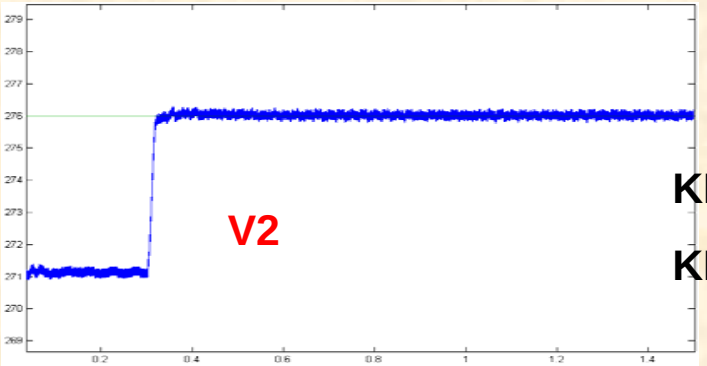

KP1=KP2=0.01

KI1=KI2=0.8

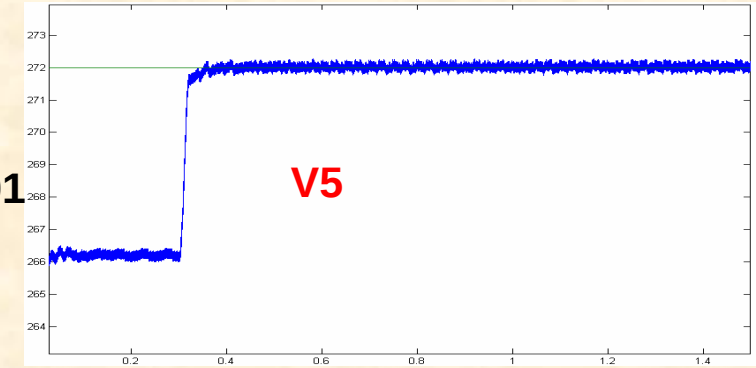

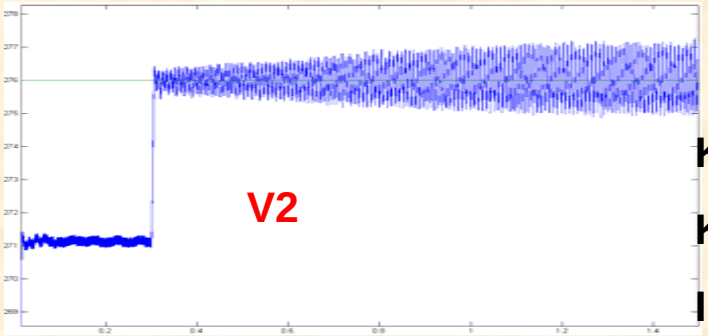

KP1=KP2=0.3

KI1=KI2=3

Instability

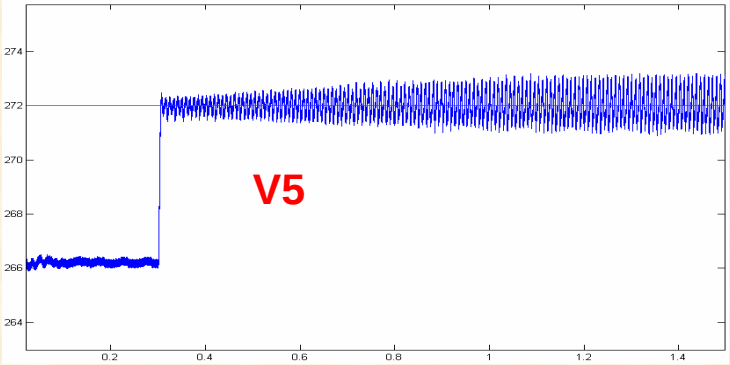

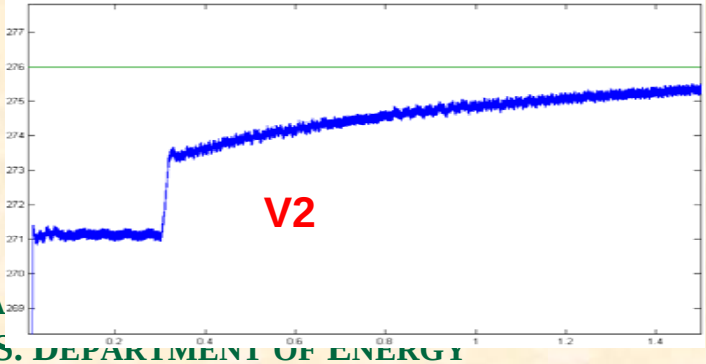

KP1=KP2=0.01

KI1=KI2=0.05

Slow Response

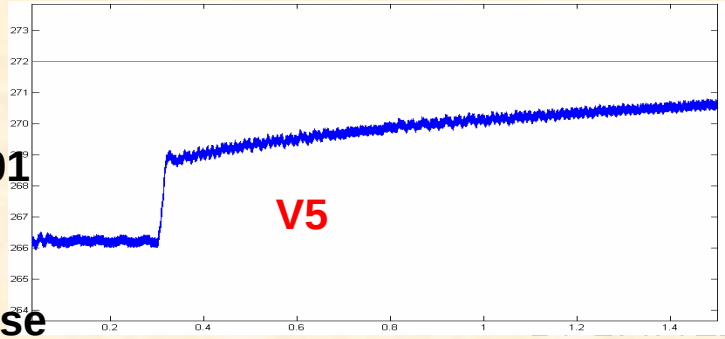

Voltage Response vs Location of DEs

A. DE1 at bus 2, DE2 at bus 5

KP1=KP2=0.01, KI1=KI2=0.8

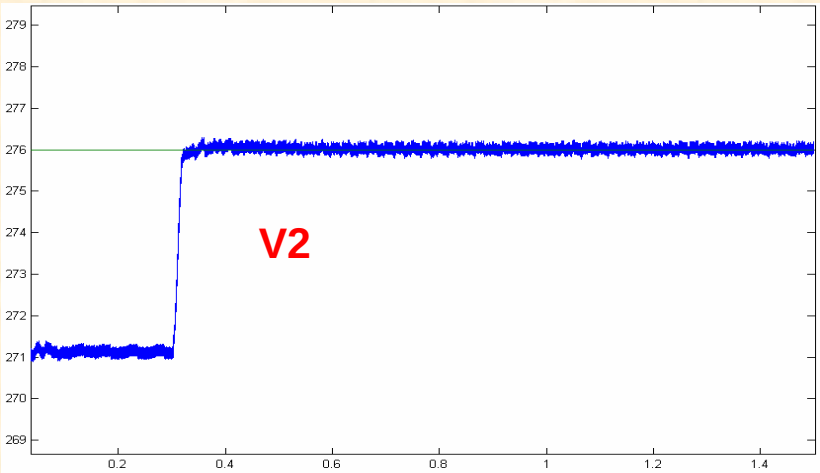

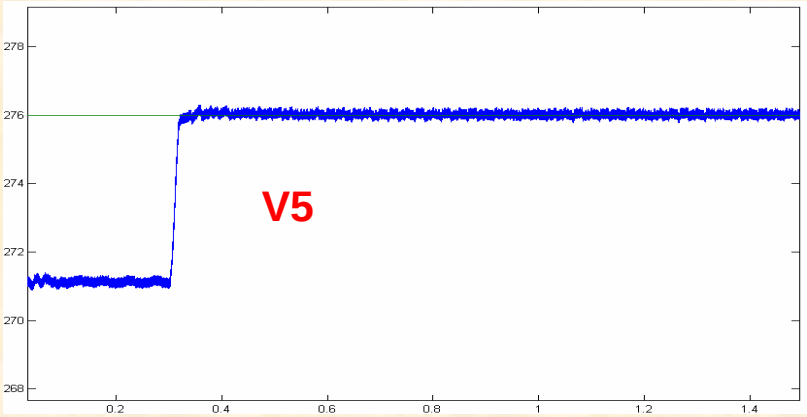

B. DE1 at bus 1, DE2 at bus 5

KP1=KP2=0.01, KI1=KI2=0.8

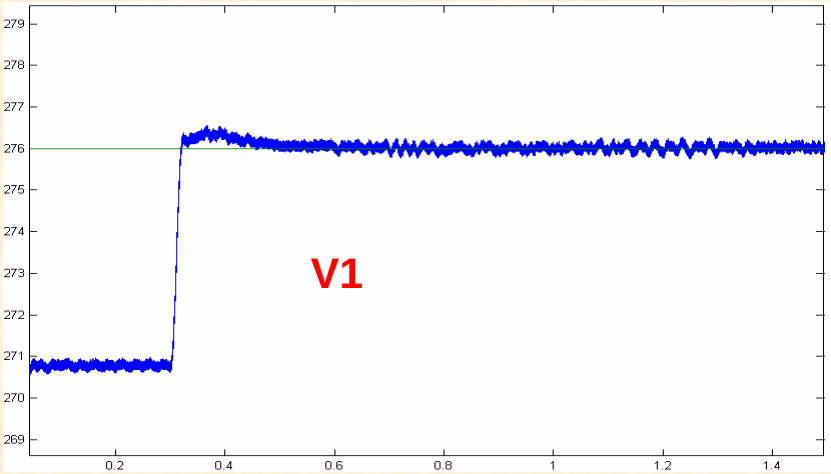

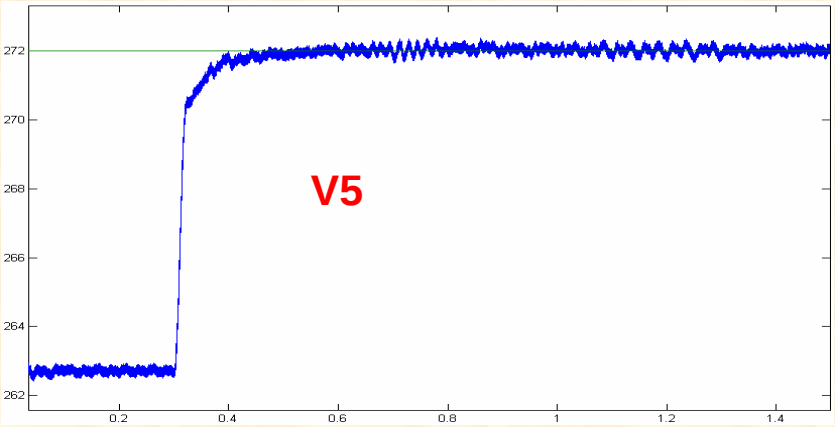

Voltage Response vs Load Level

A Load at bus 3 is 13.6kW, 2.1kVAR

KP1=KP2=0.01, KI1=KI2=0.8

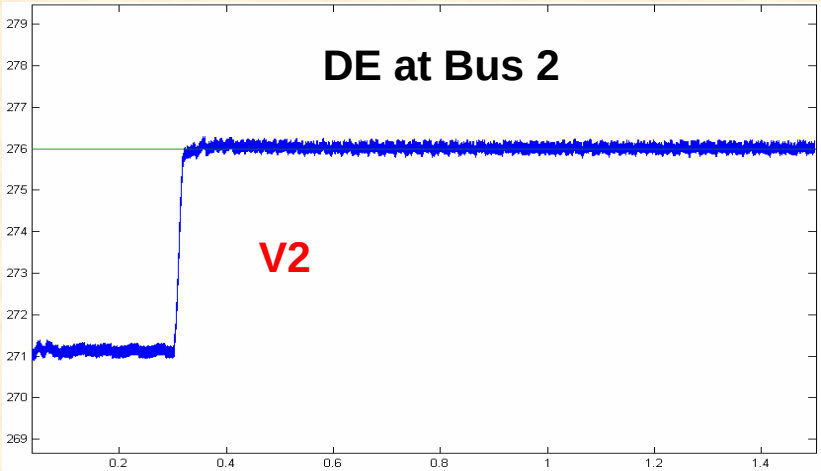

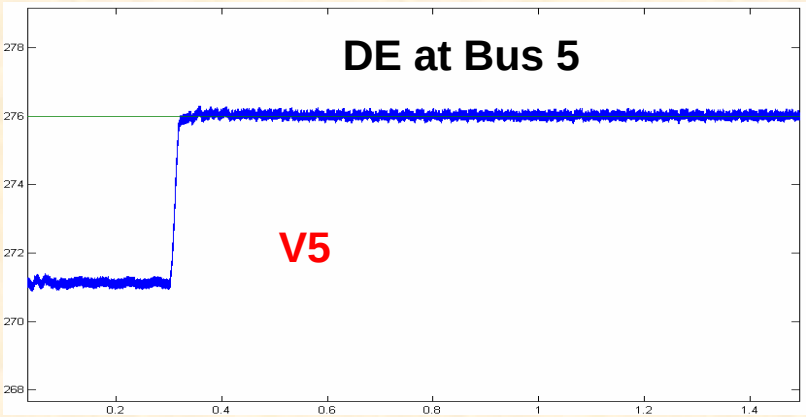

B. Load at bus 3 is 40.8kW, 2.1kVAR

KP1=KP2=0.01, KI1=KI2=0.8

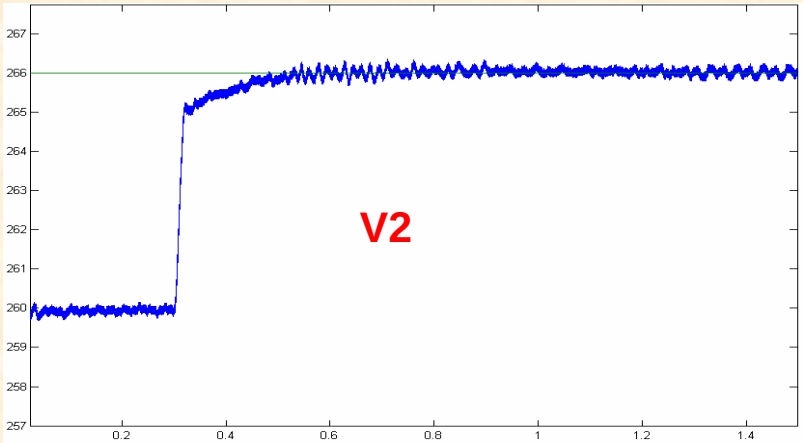

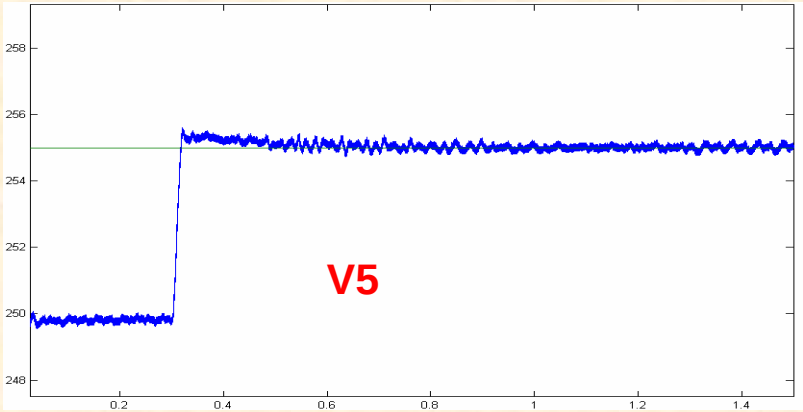

Observations From Simulation

- **PI controller parameters, KP and KI, determine the dynamic process of voltage regulation.**
- **Both of DE location and the load affect the voltage regulation, which suggests that network parameters affect the determination of PI controller parameters.**
- **We need a judicious method of choosing PI parameters to avoid instability or response that is too slow to be effective.**
- **Network model is the key to find the desired range of PI controller parameters for optimal effectiveness.**

Dynamic Network Model of DE

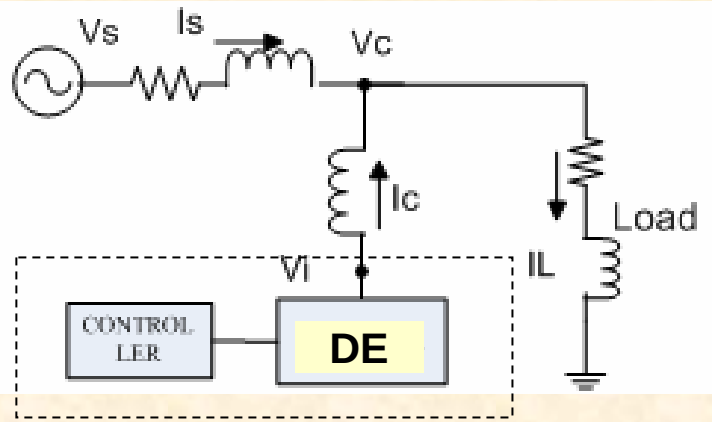

1. **Steady state network model is not applicable for studying the dynamic process.**
2. **Network dynamic characteristic should be considered.**

$$\begin{cases} V_I(S) - V_C(S) = L_C \cdot S \cdot I_C(S) \\ I_s(S) = I_L(S) - I_C(S) = \dfrac{V_C(S)}{R_L + L_L \cdot S} - I_C(S) \\ I_s(S) = \dfrac{V_s(S) - V_C(S)}{L_s \cdot S} \end{cases}$$

Using Laplace Transform, it can be represented this way

$$V_C(S) = \frac{(sL_sL_L + R_LL_s)\cdot V_I(S) + (sL_LL_C + R_LL_C)\cdot V_S(S)}{s(L_SL_C + L_CL_L + L_SL_L) + (R_LL_C + R_LL_S)}$$

Dynamic Network Model with Multiple DEs

$$\begin{bmatrix} I_G(S) \\ \underline{0} \end{bmatrix} = \begin{bmatrix} Y_{GG}(S) & Y_{GL}(S) \\ Y_{LG}(S) & Y_{LL}(S) \end{bmatrix} \begin{bmatrix} V_G(S) \\ V_L(S) \end{bmatrix}$$

$I_G(S)$ is vector of the current injection at bus connected with DEs; $V_G(S)$ is the corresponding voltage vector. $V_L(S)$ is the voltage vector of the load buses.

$$\Longrightarrow \quad V_L(S) = -Y_{LL}^{-1}(S) * Y_{LG}(S) * V_G(S)$$

Voltage dynamics of load bus is determined by network parameter, voltage source and load change.

Simulation with Dynamic Network Model

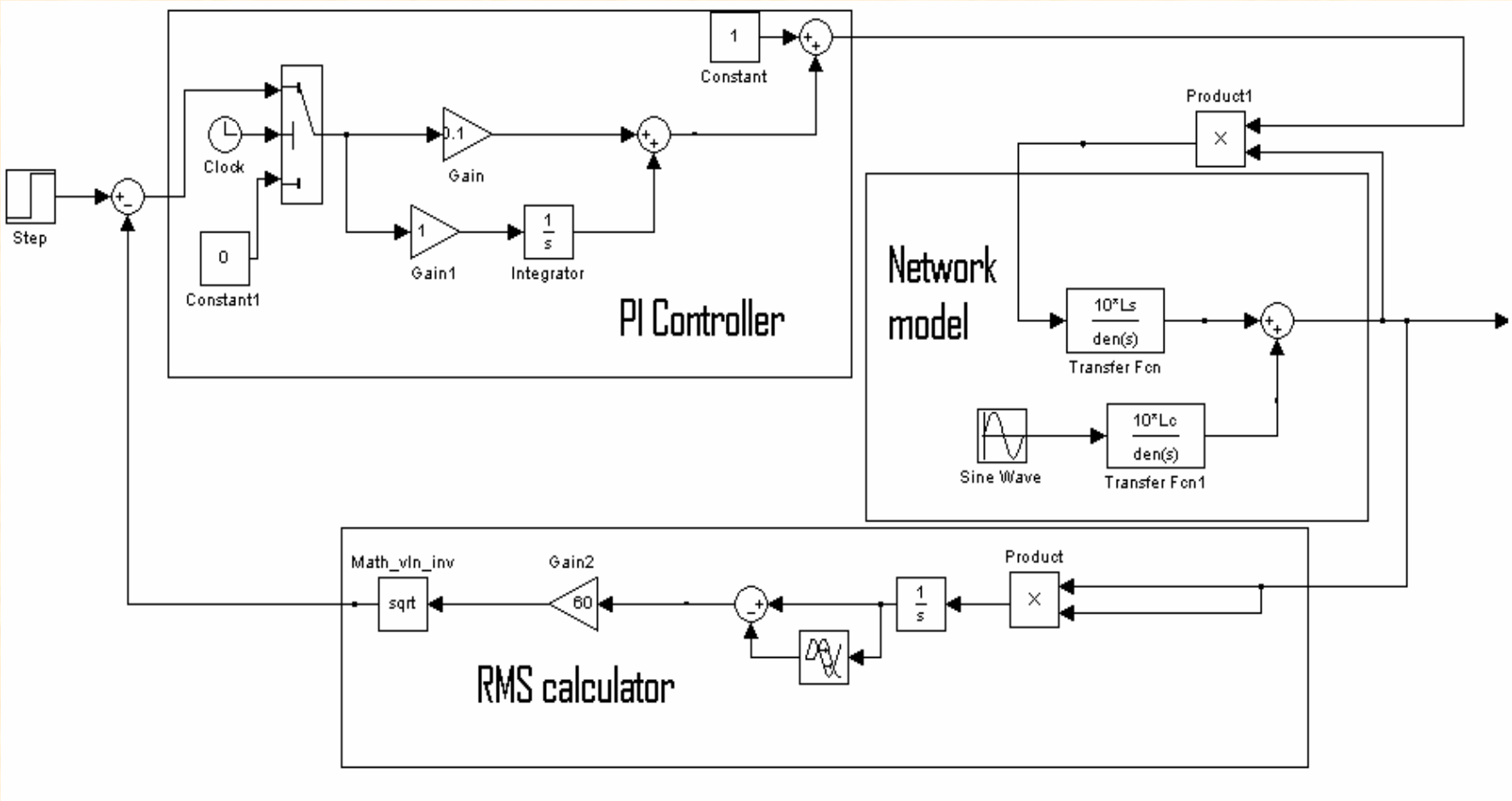

Results from Simulink model versus derived transfer function model

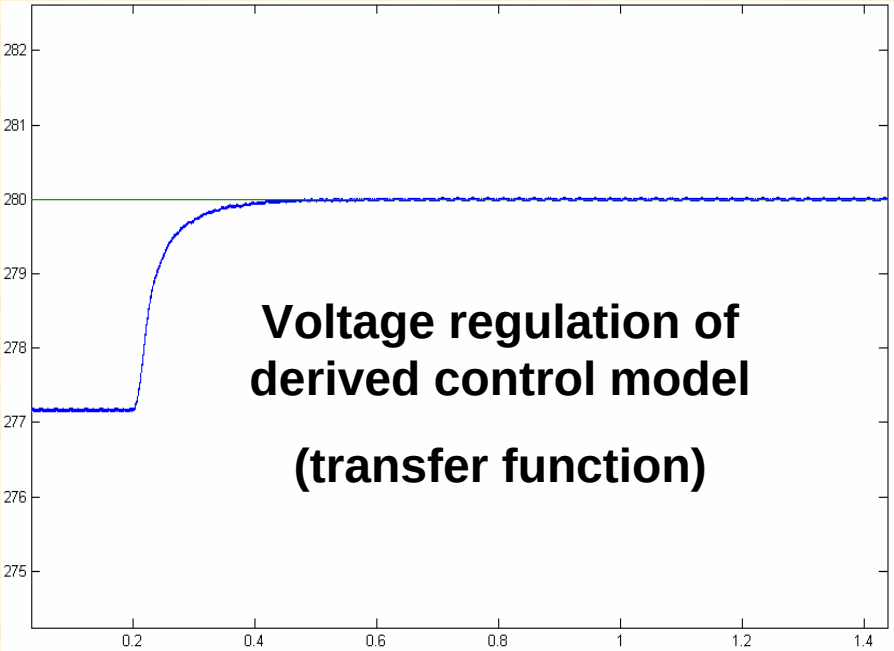

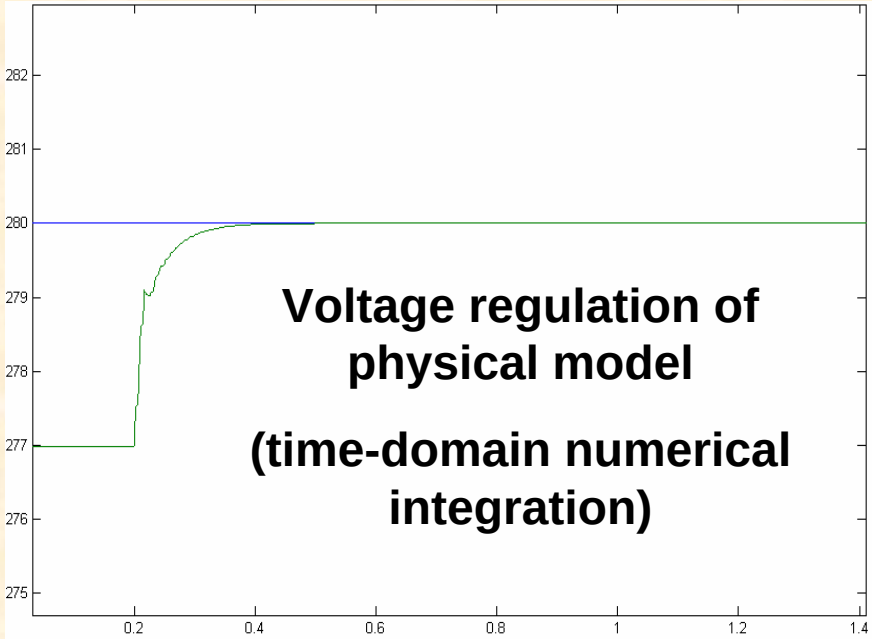

Simulation results show: the voltage response of the two models are almost identical.

Transfer function model: simple; capable to compute the stability region.

Future Research

- **The present model includes continuous network model and discrete RMS calculator model.**
- **The present model makes it difficult to generalize a transfer function for the ranges of PI Control parameters (KP and KI).**
- **We need to develop an equivalent continuous model to represent RMS.**
- **Eventually, an optimal combination of control parameters at various DEs should be determined.**

Vision of Future DE Integration for Voltage Regulation: Scalable, Autonomous and Adaptive

- **Scalable**
  - **We can easily employ the same model or strategy to a bigger power system with a greater number of DEs.**
- **Autonomous**
  - **A DE is self-configurable with minimum involvement of operators and minimal communications with outside entities; other DE devices can identify a new DE.**
- **Adaptive**
  - **When the distribution system configuration changes or as new devices are added, the DE control can identify the change and modify its parameter settings.**
- **Communication**
  - **It is preferred to have no communication to keep it a low-cost solution.**