Milestone Highlight (May 1, 2007)[1]
Distribution Energy Communications & Controls Laboratory

Oak Ridge National Laboratory
Power Systems Research Program
Cooling, Heating & Power Technologies Group[2]

Overview of Achievement

The Distribution Energy Communications & Controls (DECC) Laboratory, formerly known as the Reactive Power Laboratory, achieved this significant ORNL control milestone on April 30 and May 1 using a unique control algorithm[3] that we developed and tested with the simultaneous operation of three distributed energy (DE) resources (shown in Figure 1) in close proximity and connected to the ORNL electric distribution system. Two of the devices were dynamically regulating their end-use voltages using our developed control algorithm for local, independent control. The two devices, a 300-kVar synchronous condenser (SC) and 150A (or 125kVar) inverter, use feedback control with our unique control algorithms to adjust their reactive power output based on the measured local voltage at their power panels. One set of tests involved voltage changes of 0.5 to 5V to verify the quick response of the two devices to correct their end-use voltages. A second set of tests involved creating a severe voltage sag (over 55V on the SC panel, which corresponded to ~6V on the inverter panel) with the start-up of the 250hp synchronous motor to assess how quickly and effectively the inverter could respond to a very fast voltage sag.

The control algorithms[4] use only a local measurement of voltage and do not require communication between DE. Next steps include the development of independent algorithms that can be used over a wide-spread distribution network (10 miles or more) to support voltage in areas of reactive power shortage and to expand the network's margin to voltage collapse without interfering with existing utility control.

The dynamic control of local voltage is important for improving power quality to local and nearby loads, reducing circuit capacity and improving line losses because the injection of reactive power offsets the demand by local loads reducing the delivery current from the utility. Conventionally, shunt feeder capacitors and line regulators are used to control distribution voltages, but they are slow and are not continuous (fixed step sizes). Also, reactive power from capacitor banks drops off with the square

---

[1] http://www.ornl.gov/sci/decc/
[2] http://www.ornl.gov/sci/engineering_science_technology/
[3] A number of reports that document our developed and tested control algorithms and analyses are complete and in preparation and mentioned in this write-up.
[4] *Dynamic Voltage Regulation in Multiple Distributed Energy Resources Systems* - abstract has been prepared and accepted for the iREP Symposium: Bulk Power System Dynamics and Control – VII, August 19-24. *Nonactive-Power-Related Ancillary Services Provided by Distributed Energy Resources* – paper on DECC analysis and simulation has been prepared and accepted for publication at the 2007 IEEE Power Engineering Society (PES) General Meeting June 24-28. *Voltage and Current Unbalance Compensation Using a Parallel Active Filter* - paper has been prepared and accepted for publication at the 38th IEEE Power Electronics Specialists Conference (PESC 07), June 17-21. Voltage unbalance compensation in the DECC lab has been tested using this method.

of the voltage, so capacitors provide diminishing value at low voltage when they are most needed. Further, capacitor switching can cause transients on the distribution network, and in the worst cases they can cause magnified voltages when capacitance and inductance of the network is matched. DE can also improve voltage stability of the power grid by providing reactive power during system stress, i.e., when there is a shortfall or transport limitations on reactive power delivery from central generators and on major transmission lines.

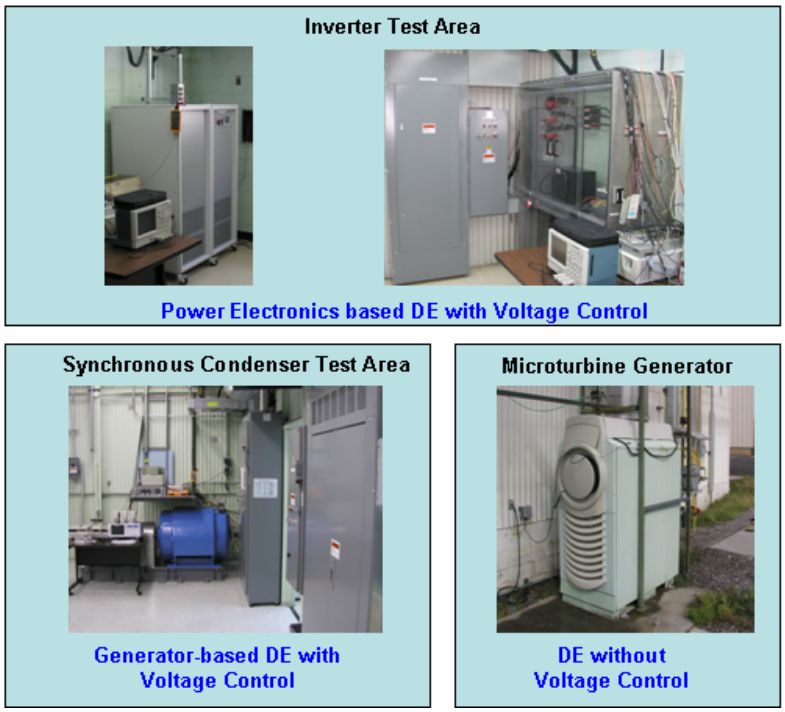

Figure 1. Inverter, synchronous condenser, and micro-turbine-generator that were tested simultaneously.

Our industry partners view DE providing local voltage regulation as the wave of the future. The use of DE is growing, and local voltage regulation is a necessary ancillary service for ensuring power quality for more demanding loads, such as computers and electronics-based loads, which are increasingly showing up on the power system. One of our utility partners, Southern California Edison (SCE), is looking toward implementation of this technology on their "Distribution System of the Future." They envision providing more than 30% of the reactive power needs of the distribution circuit using local DE. Our vision is that DE will provide dynamic local voltage regulation and will provide a known, expanded margin to voltage collapse. While doing this, DE will improve circuit efficiency and power quality, and release capacity in the distribution and transmission system.

DECC Path Forward

The completion of this milestone is just the beginning of our control algorithm development and evaluation/testing of multiple DEs with local and autonomous reactive power injection/voltage regulation capability. As one can imagine, the various complexities associated with the dynamic control and operation of DE resources creates many challenges. Variables such as (1) the number of DE technologies to choose from, (2) the myriad configurations across different feeders, and (3) the functional requirements of the DE devices, etc. create challenges in deploying a universal approach and cost-effective solutions for utilities. As a result, ORNL has established a two-prong vision and approach for the integration of DE into the grid. First, develop general engineering guidelines or "rules

of thumb" for utilities given that some DE resources will employ these dynamic active and non-active power regulating capabilities and control while other DE resources (such as existing conventional resources) on the same system will not have these capabilities. Rules of thumb will address such issues as (1) what is an appropriate level of DE penetration on a given feeder, (2) where should DE resources be located, (3) how should they be operated for maximum benefit, and (4) what are appropriate time delays for DE responses. Second, develop a "universal control" that provides a framework for controlling DE resources. The goal is to have a control framework that requires only modest modifications to control algorithms, i.e., adjustment of parameters depending on requisite applications, DE technology or manufacturer requirements, DE device limitations, etc. The goal of the control algorithms is to provide dynamic local voltage regulation, system voltage support and voltage collapse mitigation to make DEs an asset for improved system reliability and efficiency. Also, this new type of control provides the capability for DE power factor compensation, non-active power compensation (i.e., mitigate harmonics, correct voltage or load unbalances) and DE control under both normal and abnormal system conditions. This document highlights our testing of some initial analytical control techniques for independently controlled DEs in parallel for providing local dynamic voltage regulation. In parallel with this testing, we are conducting simulation analyses of these control algorithms in the Matlab/Simulink software environment. In this software environment, we are continuing to analyze the dynamic operation of our two DEs (inverter and SC) with various instantaneous control algorithms along with the dynamic models of the immediate electrical network of the DECC laboratory and local substation. Also, we have developed an initial methodology documented in a draft technical paper[5] for extending the margin to voltage collapse. The methodology uses the dynamic voltage-regulating capability of these DEs with voltage droop capability to extend the margin as the system gets closer to the knee of the P-V curve or voltage collapse point. We are continuing to develop and evaluate control algorithms[6] for the DEs under various system conditions. These include various DE locations, sizes, configurations and penetration levels using the ORNL electrical network model and other network models provided by our SCE utility partner. Our DECC laboratory will continue to focus on testing, evaluating and refining the various control algorithms that we develop for the inverter and synchronous-machine based DEs.

We have developed a test matrix for our path forward that considers a number of operational test scenarios for evaluating our dynamic DE control algorithms. These scenarios involve (1) balanced/unbalanced voltage conditions (i.e., sags), (2) various dynamic load conditions (i.e., motor starts), (3) changing load conditions (i.e., step load changes), (4) severe abnormal conditions (i.e., when there is a fault; we will use several sizes of three-phase motors — single-phased so that they can't start — to produce severe/unbalanced voltage sags for several cycles similar to that due to a fault), and (5) changing voltage schedules for the DEs which involves the use of a voltage-band based control. Based on the results of these tests, general engineering guidelines or "rules of thumb" will be developed along with a control methodology framework that will provide a streamlined engineering approach for utilities to implement various ancillary services using DE resources.

---

[5] *The Use of Distributed Energy Resources to Extend the Margin to Voltage Collapse* - paper prepared based on simulations and submitted for the IEEE Transactions on Power Systems but not accepted. We plan on resubmitting the paper with significant changes especially in the introduction to give background on the state-of-the-art and what is offered by this new DE approach. *Use of a Voltage Schedule and Independent DER Control Algorithm to Increase Margin to Voltage Collapse* - outline developed for a paper to be prepared with Southern California Edison (SCE) targeted for policy makers.

[6] We are coordinating with SCE to simulate our DE methods for voltage control using their distribution system models. We are examining the impact of our control algorithm methods on the "micro voltage collapse" events they have had on their system.

DECC facility

The Oak Ridge National Laboratory (ORNL) developed the Distributed Energy Communications and Controls (DECC) Laboratory for studying dynamic voltage and power factor control supplied from DE resources. This unique laboratory currently has installed both rotating and inverter-based technologies. Figure 2 shows the one-line electrical diagram of the DECC Laboratory and its connection to the ORNL distribution system. ORNL is unique in that it owns and operates its own electric distribution utility for the laboratory campus and can configure the distribution system to provide optimum opportunities for testing of non-active power (including reactive power) injection effects from rotating and inverter-based DE. Real-time monitoring and programmable controls are available at the end-user laboratory level for testing and developing local controls for DE. Also, there is a real-time monitoring system for the overall distribution system via the PowerNet® System and power meters located at all of the ORNL substations. A complete hierarchy of power distribution system testing, such as load changes, startup of dynamic loads, and feeder reconfiguration, is offered by DECC via the existing end user laboratory and its linkage with the ORNL distribution system that ties in with the TVA bulk transmission system.

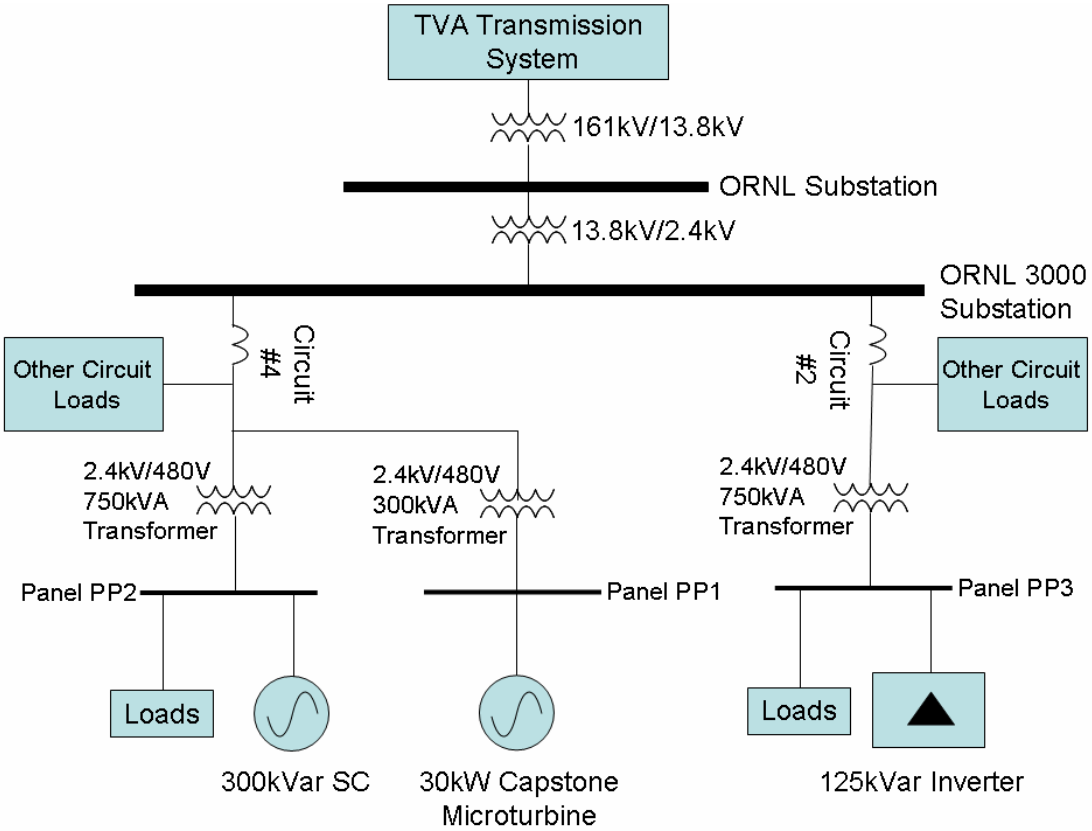

Figure 2. Electrical diagram of the DECC Laboratory and equipment.

As evident in this milestone achievement, DECC offers the capability to test technologies in a real-world distribution system and at substation environments and simulate the integration of multiple technologies on the electric grid. It provides the link between testing and simulation needed to ensure accuracy of experimental results. Additionally, renewable energy technologies, many being inverter-based like photovoltaics (PV), can be accommodated in the DECC facility. We estimate that approximately 20 inverter-based technologies up to 1MVA could be tested in parallel at the same time.

Results of Distributed Systems Testing

The two devices, SC and inverter, were controlled separately, which was also unique since it didn't involve any central communications and control or the need for the two devices to talk to each other. The test was significant from the perspective of showing how conventional DE operates with "smart" DE that can dynamically control its local voltage.

During the test, our 300kVar synchronous condenser, which is a 250-hp synchronous motor that is overexcited, and the 30-kW Capstone Micro-turbine were running on their individual 480V power panels connected to circuit #4. Simultaneously, our 150A inverter was running on circuit #2 on its individual 480V power panel. All three devices are connected to the same substation, ORNL's 3000 substation. ORNL is a direct distributor from the TVA 161kV backbone transmission system. We have designed local controls using Matlab/Simulink and dSpace software and hardware to operate both our SC and inverter to provide voltage regulation locally and dynamically. The SC and inverter operate as reactive power generators or sinks depending upon the voltage needed: they generate reactive power to boost voltage and improve a lagging power factor when voltage is low and absorb reactive power to lower voltage when it is too high and keep the power factor from going too leading. The Capstone Micro-turbine uses conventional inverter controls and is designed to operate only when grid voltage is present and within specified limits and to provide active power locally or to the grid. It doesn't perform any voltage regulation or power factor correction support of any kind.
#
The SC system has a response time in the millisecond range while the inverter system has a response time in the microsecond range. With small voltage changes, such as 0.1V, the two devices can respond quickly but with larger voltage changes, such as 0.5 to 4V, it takes them 0.5 to 1 sec to settle to a new steady-state voltage condition. The response can be made more rapid but at the tradeoff of higher control gains and overshoot versus lower gains and virtually no overshoot in voltage.

The first set of plots (figures 3 and 4) shows the response of the synchronous condenser and inverter to end-user voltage changes at their local power panel. They can regulate their own service voltage independently from the other. The synchronous condenser can provide up to 300kVar (kVar is a kilovolt-ampere reactive, a measure of reactive power) and can easily accommodate a 5V change, as shown in Figure 3. The inverter is about one-third the size in capacity and so can accommodate a 1V change, as shown in Figure 4. The tests involved changing the reference voltage for the two controllers, which is the same as what would happen with a large load connected to the same circuit being turned on or off.

The next set of plots (Figure 5) shows the starting of the 250hp synchronous motor on circuit #4 with and without the inverter operating, which is on circuit #2. The inverter was able to reduce the voltage sag due to the motor start even though they are on different circuits and power panels. With a larger inverter, the sag would have been reduced even more. This is significant because the inverter detected a voltage change on the distribution network and adjusted its reactive power output dynamically and extremely quickly to correct the change and thus improve the power quality to end-users. The plot also shows the speed of response of the inverter operating at 12.5 kHz. Almost immediately, the inverter responded to adjust the voltage dip by changing its reactive power output.

By incorporating larger generators in rotating DE (such as reciprocating gen-sets) and larger inverters in micro-turbine or fuel cell DE, end-users can have the ability to meet both their active power and non-active or reactive power needs to support their end-user and system voltages. The active power is what performs actual work and reactive power is what inductive loads need to store energy, such as for the operation of motors. Even idle motors, such as those used in industry, could be modified like our 250hp synchronous motor to provide reactive power at the customer site. Incentives for end-users to

provide reactive power support are growing, and perhaps in a few years they will match the incentives for providing active power.

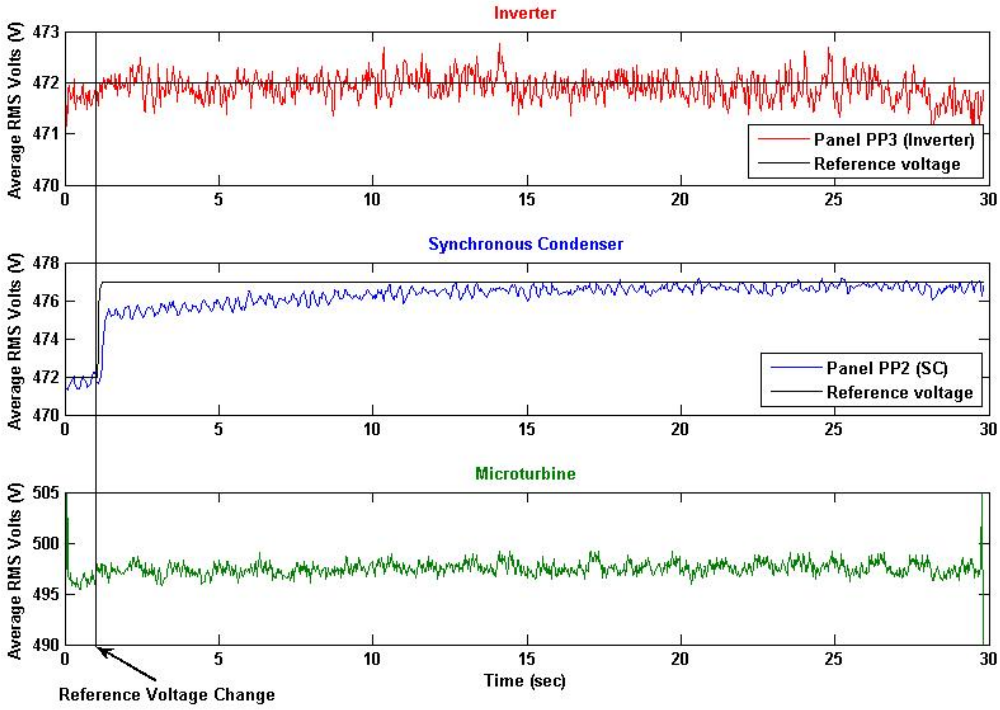

Figure 3. DE devices operating simultaneously: response of SC to 5V reference change.

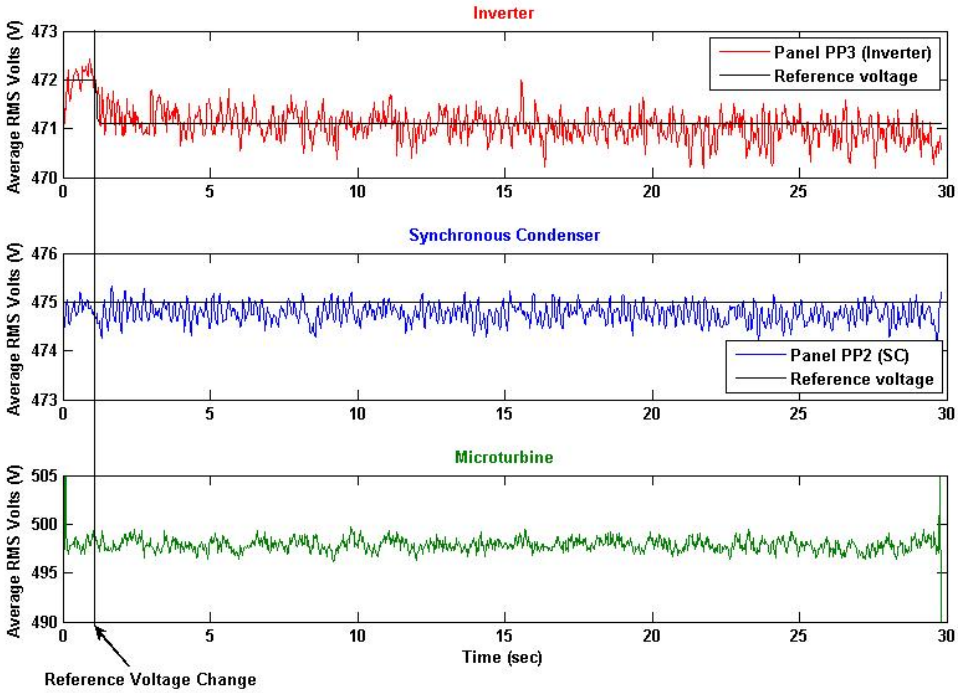

Figure 4. DE devices operating simultaneously: Response of inverter to 1V reference change.

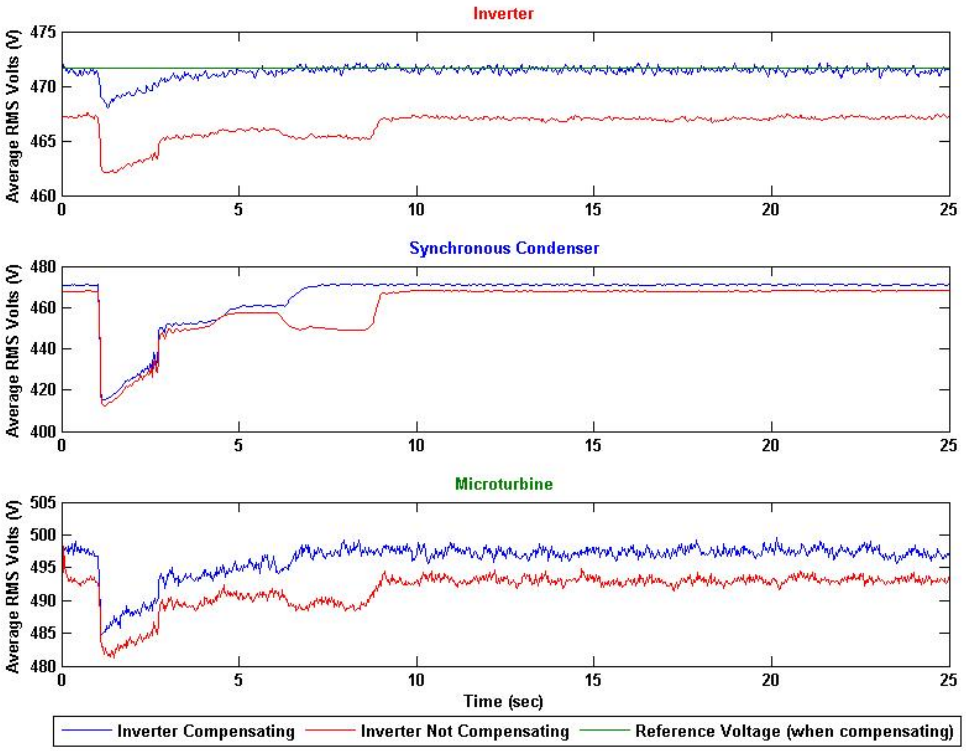

Figure 5. Severe voltage dip from synchronous motor startup without and with inverter voltage control.