The Benefits of Small Scale Cogeneration using *Microturbines*

January 20-22nd 2004

Tony Hynes
President
Bowman Power Systems, Inc.

HIGGINS BRICK

What are Microturbines?

Self-contained power generation units that are:

Low in maintenance

Low in emissions

Low in noise

Low in vibration

Portable

One moving part

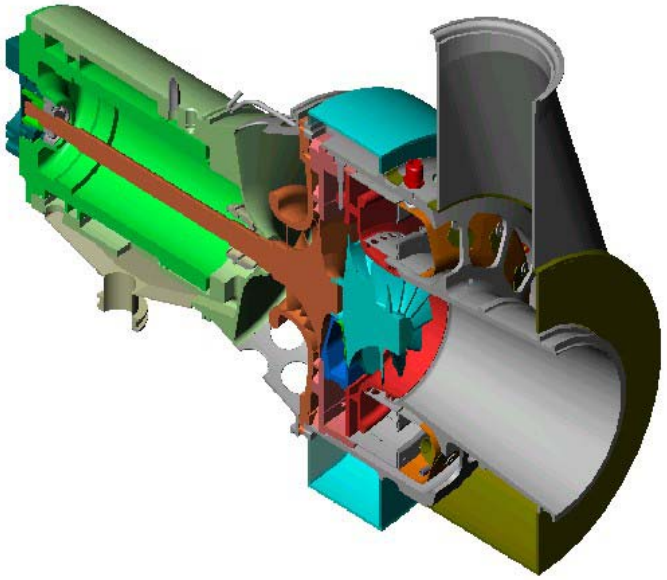

An alternative or Supplement to the Grid

What are Microturbines?

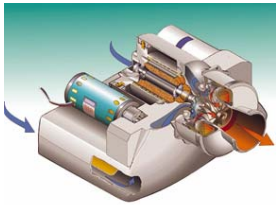

- Based on:

  –Efficient, low emission gas turbines

  –High speed generator technologies

  –Power electronics and conditioning

  –Integral heat recovery system

  –Optimal use of microturbine

IS BRICK

The Project at Higgins Brick

Higgins Brick Background

- Founded in 1927
- Produced 4 billion bricks in its 76-year history
- Located in Chino Hills, CA
- Total capacity is 60 million bricks annually
- Remains family enterprise to this day, directed by Ronald Higgins, Sr., as well as several fourth generation family members
- Manufactured some of the largest brick projects ever undertaken in California - Including:
  - Market Street in San Francisco
  - Parkloft in San Diego

What are we doing?

Ultimate Objective:

Total Energy Savings to Higgins Brick

How?

By reducing the amount of gas their gas burners consumed

And, offsetting a percentage of the electricity delivered by the local utility and replace with lower cost electricity.

Over what period?

Immediate cost savings with no capital outlay

Long term commitment to the energy service provider

Why is Bowman doing this?

Electrical Efficiency Alone Not Adequate for Most Applications

MTG 25-30%

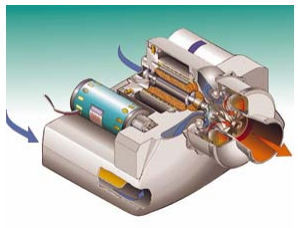

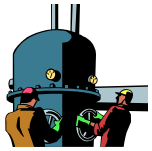

Heating or Cooling

45-55%

Economic payback

Concept & Approach

Bowman will design, install and operate the necessary hardware to produce electricity and heat to achieve the desired efficiencies

And Bowman will sell the electricity to Higgins Brick at a discounted rate (40%) from the utility prices

Higgins will purchase the necessary natural gas to fuel the Bowman Microturbine systems

Configuration Options

Option 1

Turbine exhaust ducted directly into Kiln

Challenges

- Turbine exhaust was to low for preheat zone in Kiln
- Turbines exhaust temperature = 950°F - 1100°F
- Preheat zone's required temperature = 1300°F - 1450°F

Option 2

Turbine exhaust boosted using an after burner before being ducted into Kiln.

•**Challenges**

- Turbines exhaust could be boosted to 1500°F with an after burner
- After burners would consume further fuel to raise to required temperature
- Configuration and control system for the after burner exceeded budgeted cost

Option 3

Turbine exhaust ducted directly into burner combustion air

Challenges

- Burners require a minimum of 21% Oxygen. Oxygen content from TG80RG is 16%
- Combustion blowers can not operate with elevated temperatures
- How to regulate combustion air flow when X number of TG80RG's are operating. Would also have to bleed ambient air into combustion blowers

Option 4

Turbine exhaust ducted into combustion air through two heat exchangers

- Burners have sufficient oxygen
- Combustion blowers still take in ambient air
- Process is not effected if TG80RG's are down for repair or maintenance
- Fourth TG80RG is used for peak shaving and redundancy

Option 5- Advantages

- Burners have sufficient oxygen
- Combustion blower still takes in ambient air
- Process is not effected if TG80RG's are down for repair or maintenance
- Utilization one heat exchanger allows for total cost reduction
- Elimination of pre-heat combustion blower by only using furnace combustion blower for both zones, thus reducing the parasitic loss of preheat combustion blower

Plant Layout

Drawing of Configuration

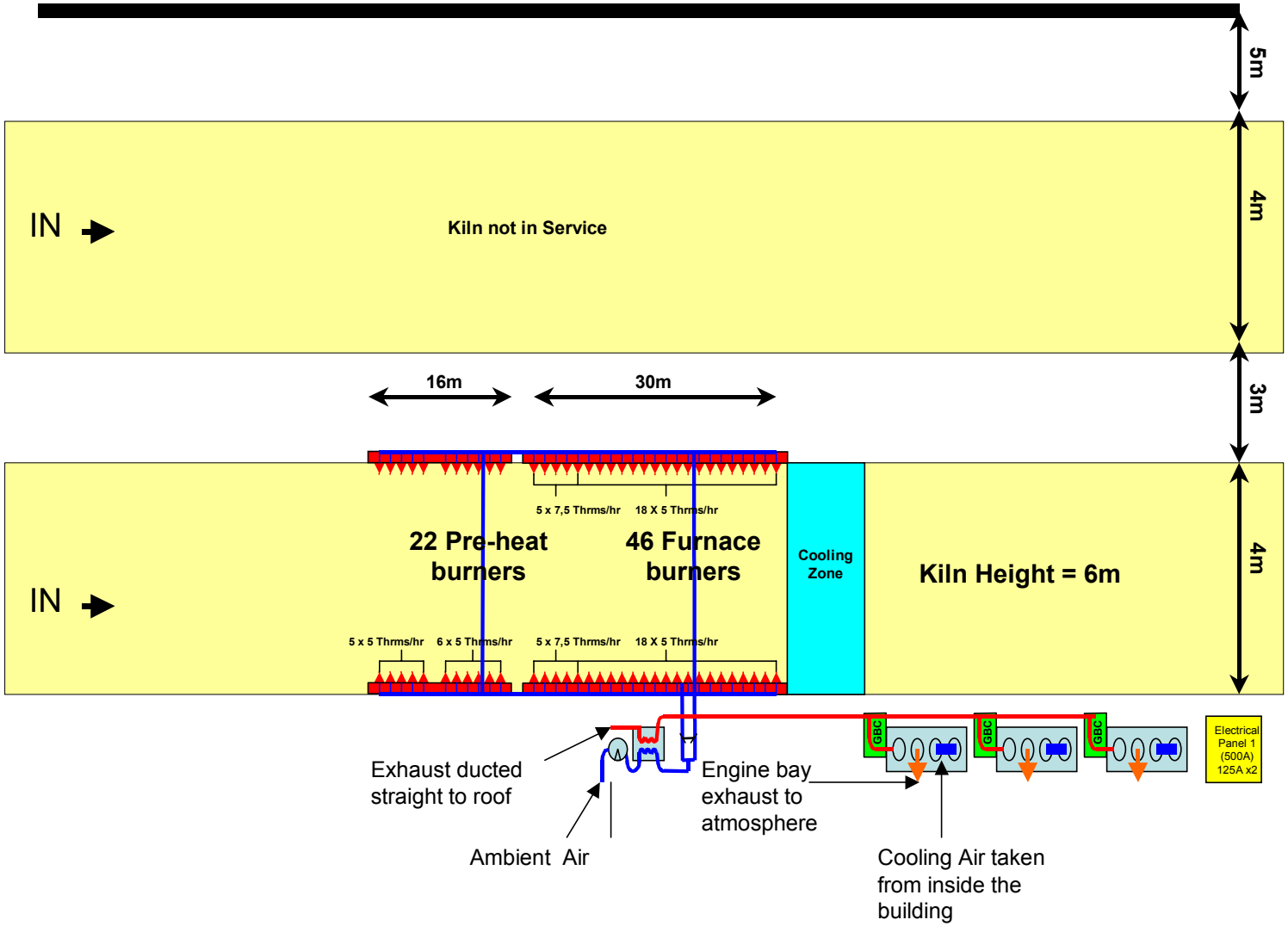

Diagram

Process Diagram

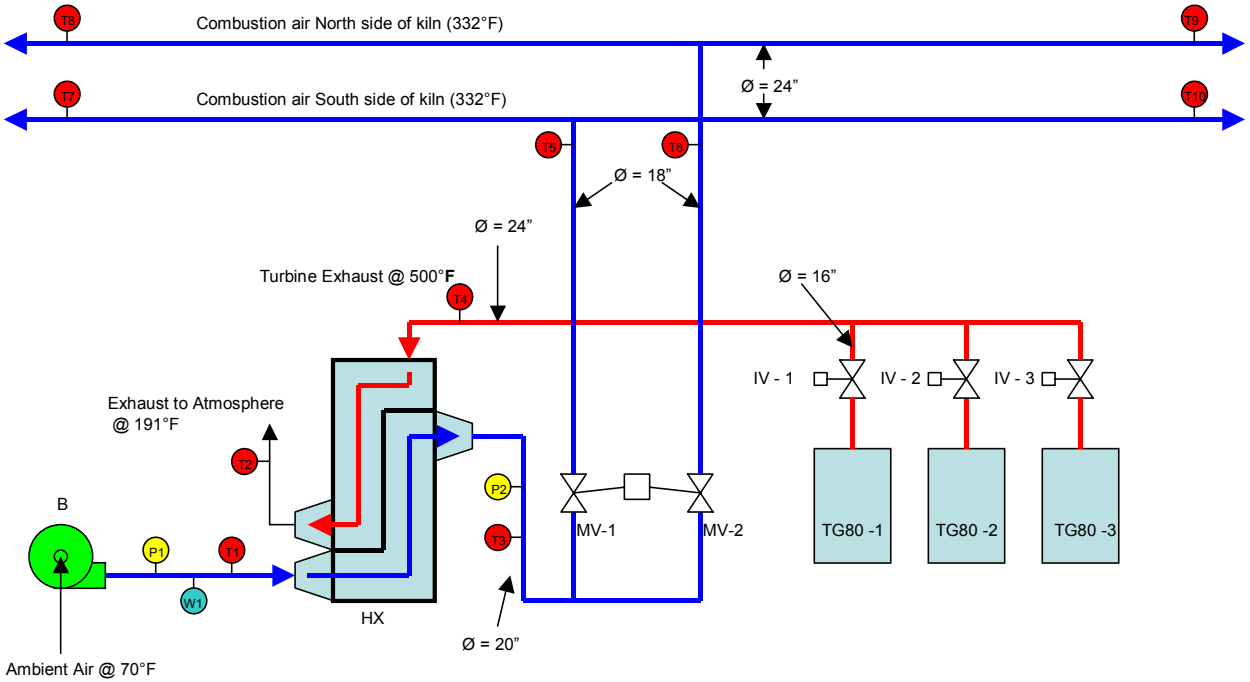

W - Mass Flow Meter

T - Temperature Gauge

P - Pressure Gauge

IV – Isolation Valve
MV – Modulation Valve (existing)
B – Blower (existing)
HX – Heat Exchanger
TG80 – Turbo Generator – 80kW

Basic Conditions

Turbine Exhaust	19.760 lbs/hr	500°F ?	191°F
Combustion Air	23.775 lbs/hr	70 °F ?	332°F
Thermal Recovery	1,506,000 BTU/hr		
Minimum Recovery	1,038,300 BTU/hr		

Projected Savings

Higgins Brick Savings with 3 x TG 80 Recuperated Systems at 73 kWe net

Energy Unit Rates	Year	1	2			
Electricity - Utility Price	c/kWh	13.9	11.8	Machines 1 to	5450	Hrs p.a.
Electricity - Bowman ESCO Price	c/kWh	8.0	6.8	Machine 4		Hrs p.a.
Gas Price	c/therm	41.0	41.0			

Energy Usage				
Gas Burned in all burners	kW		therms/hr	22.0
Gas Burned reduction due to preheat	kW	390.0	therms/hr	13.3
Gas Burned per TG 80	kW	293.0	therms/hr	10.0
Net Electricity Generated per TG 80	kW	73.0	kW	73.0

Energy Costs and Savings	Year	1	2
Gas Cost Avoided by preheating burner air		$29,757	$29,757
Electricity Cost Avoided - SCE		$165,901	$140,956
	Total	**$195,658**	**$170,713**
Gas Cost - TG80's		$67,067	$67,067
Electricity Cost - Bowman ESCO		$95,483	$81,160
	Total	**$162,549**	**$148,227**
Net Savings to Higgins		**$33,108**	**$22,486**

Information

More Information or Questions Contact:

Tony Hynes

Bowman Power Systems, Inc.

(818) 999 6709;

(818) 884-0991 FAX;

E-mail: **ahynes@bowmanpower.com**