CSIRO

ENERGY TECHNOLOGY

CSIRO Energy Technology: CHP and Cooling using Micro Turbines in Australia

By Glen Watt, Rob Helstroom, Tony Vassallo, CSIRO Energy Technology

DOE/CETC/CANDRA Workshop on Microturbine Applications

January 21-23, 2003 in Calgary, Alberta, Canada

CenDEP

Australian Microturbine Installations

- ***As at January 2003:***
- ***Operating:***
- *CSIRO Energy Technology, North Ryde, NSW*
- ***Approved:***
- *Hornsby City Council Library, NSW*
- *CSIRO Newcastle Energy Centre, NSW*
- *CSIRO Forestry Products, Clayton, Victoria*
- *Newcastle University, NSW*
- ***Under Active Investigation:***
- *CSIRO Atmospheric Research, Aspendale, Vic*
- *CSIRO Marine Research, Cleveland, Qld*

Where Are The Projects?

Brisbane: CSIRO Marine,Cleveland

Newcastle: University & CSIRO Energy Centre

Sydney: CSIRO ET North Ryde & Hornsby Library

Melbourne: CSIRO Atmospheric Research, Aspendale

CSIRO

ENERGY TECHNOLOGY

CSIRO Energy Technology North Ryde Installation

CSIRO Energy Technology North Ryde Installation

- *North Ryde, a north west suburb of Sydney*
- *Project Manager & Funding: CSIRO Energy Technology*
- *30 kW Capstone Micro Turbine using natural gas*
- *Air Bearing Gas Compressor (one of the first – no problems so far)*
- *Australia's only operational microturbine (December 2003)*
- *Grid Connected, feeds CSIRO Energy Technology building, no export but can*
- *No Waste Heat Recovery*

North Ryde Installation

- *Engineer: Robbie McNaughton, CSIRO ET*
- *Installation began in June 2001, first operated July 2001*
- *Final approvals received August **2002***
- *Major delays electrical authority approvals for installation & grid connection – combination of first of a kind new technology, our learning and authorities learning*
- *Natural Gas valve train modified to meet Australian Standards*
- *Approvals simpler and less costly in future*

North Ryde Installation

- *Natural Gas supplied at 100kPa (14psi)*
- *Inlet pressure to compressor 85kPa (12psi)*
- *Supplier Support from Capstone and local agent good*
- *No warranty issues to date*
- *Problem due to use of additional acoustic panels – temperature difference between inlet turbine air and electrical cooling air caused shut down*
  _ problem fixed when panels removed
- *Future market is cooling, heating and power combinations, provided costs can come down*

North Ryde Installation

- *Estimated Cost Table ($US)*

Item	*Actual*	*100% Hindsight*	*50th Installation*
Turbine	*40,000*	*40,000*	*40,000*
Mechanical	*2,500*	*2,500*	*2,500*
Electrical	*5,000*	*2,500*	*1,500*
Civil	*1,500*	*1,500*	*1,500*
Project Engineering	*5,000*	*4,000*	*2,500*
Capstone Course	*4,500*	*0*	*0*
TOTAL	*58,500*	*50,500*	*48,000*

North Ryde Installation

- ***As at 19 December 2002:***
- *Hours Operation: 2365*
- *Running 24 hrs/day since August 2002 when approvals gained*
- *No. Starts: 189*
- *Power output 20kW (low) to 28 kW (high) - set by operator*
- *Turbine Flue Temp. 273C (523F)*
- *Plant Room Temperature typically 3C higher than ambient*

North Ryde Installation

- ***As at 19 December 2002:***
- *Average Electrical Performance ~24% LHV, ~22% HHV*
- *Estimated Parasitic Losses ~ 2kW (mainly gas compressor)*
- *No power quality tests done*
- *No emissions testing done, but planned*
- *No availability outages*
- *No O&M costs to date*

Projects Approved and Being Implemented

Hornsby Shire Council Central Library, Sydney

South-east main entrance

Building Overview

- ~ 3,000 m^2 floor area (~33,000ft^2)
- ~ 4,300 h/yr service
- ~ 450 MWh/yr electricity
- ~ $A38,000/yr energy ($A2=$C1.80=$1US)
- ~ 438 tonnes(CO_2)/yr
- ~ 62% HVAC (140 + 195 kWt)

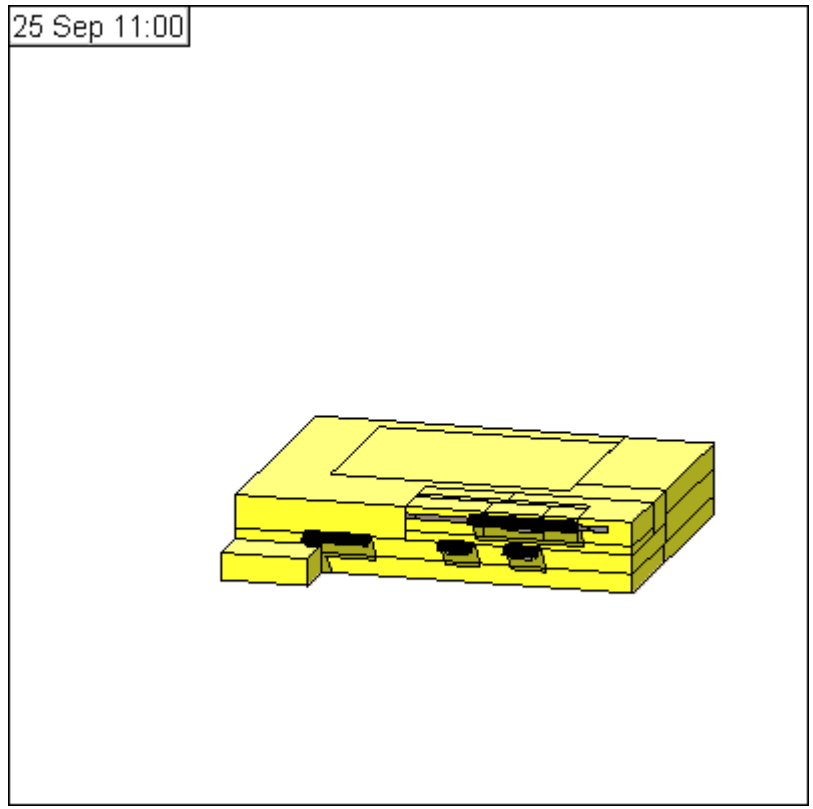

Heat Load Modelling

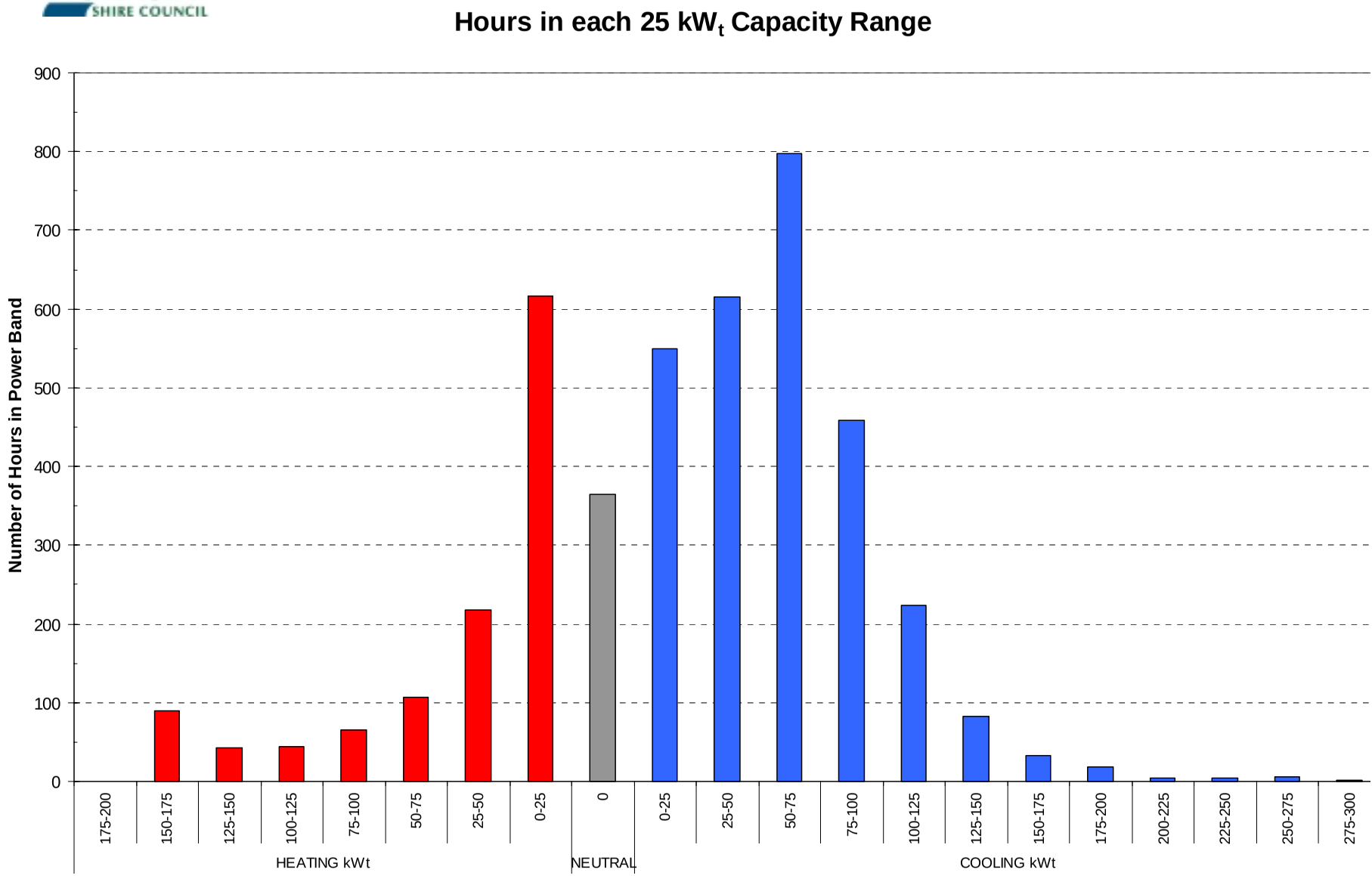

Hornsby Library

Existing Air Conditioning System

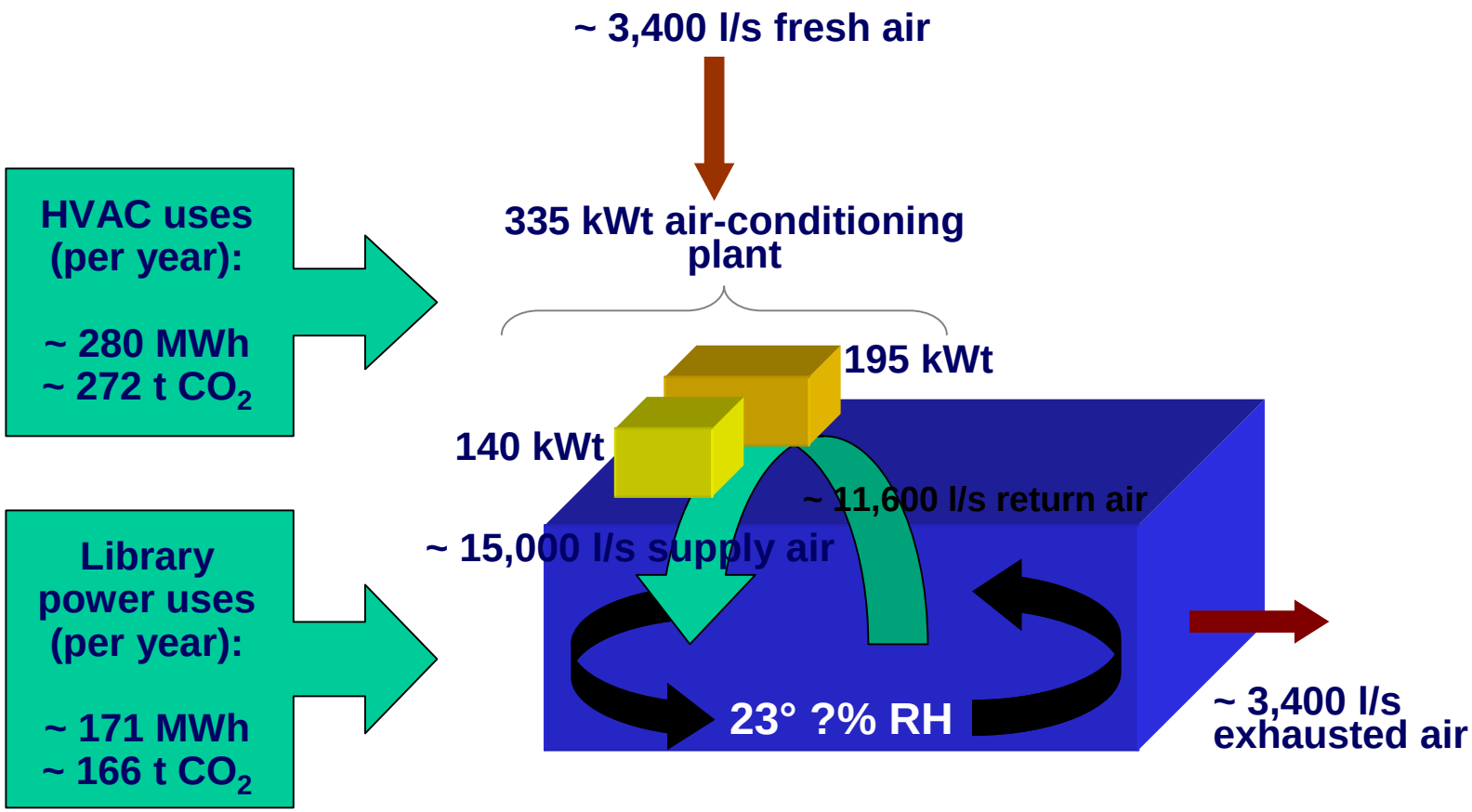

451 MWh Black Coal Electricity
438 tonnes of Greenhouse Gas

Hornsby Library

Proposed Air Conditioning System

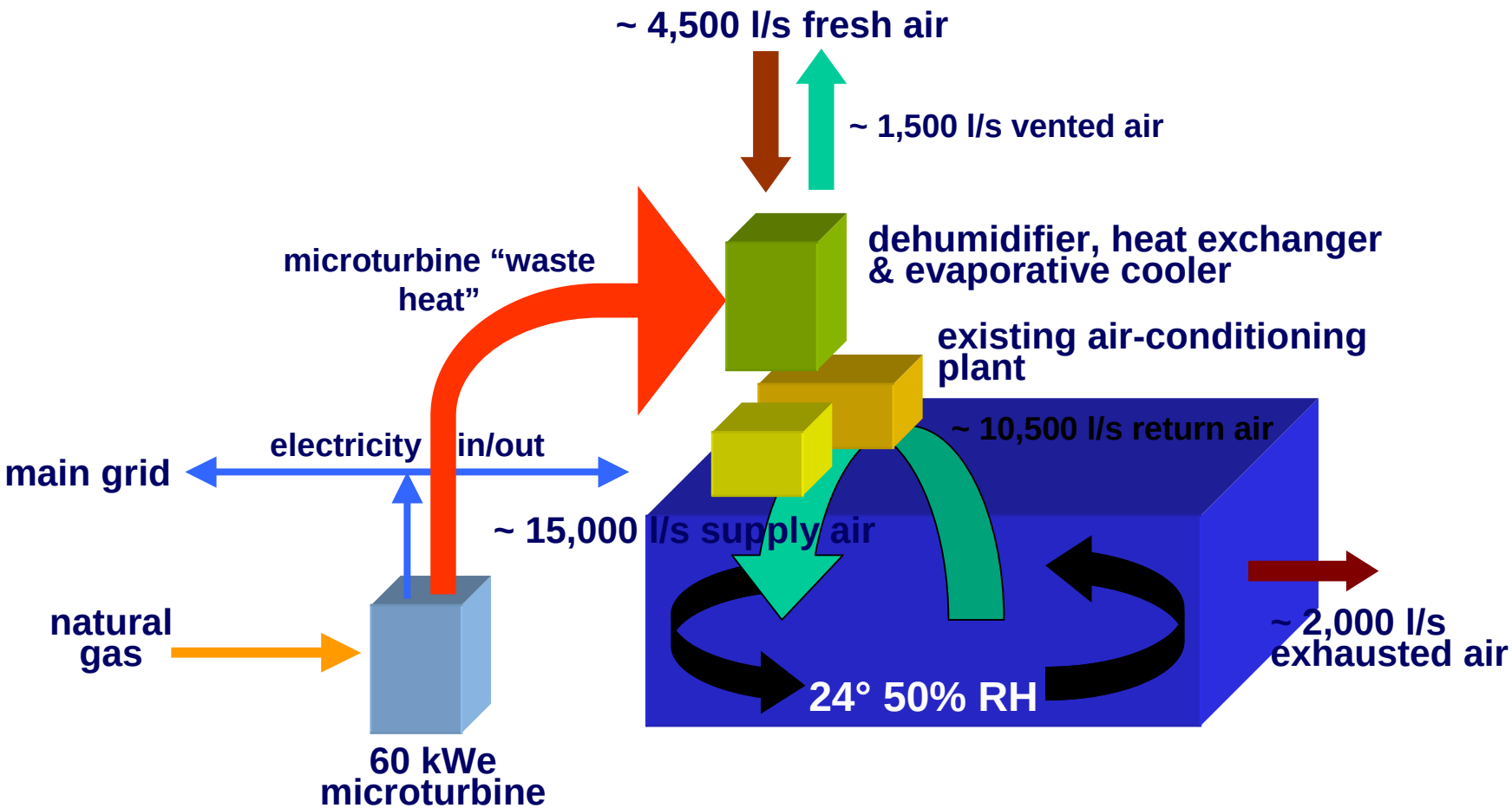

230 tonnes CO_2 saving from gas use
+ 30 tonnes CO_2 displaced electricity

Proposed System

- microturbine and dual wheel desiccant cooler

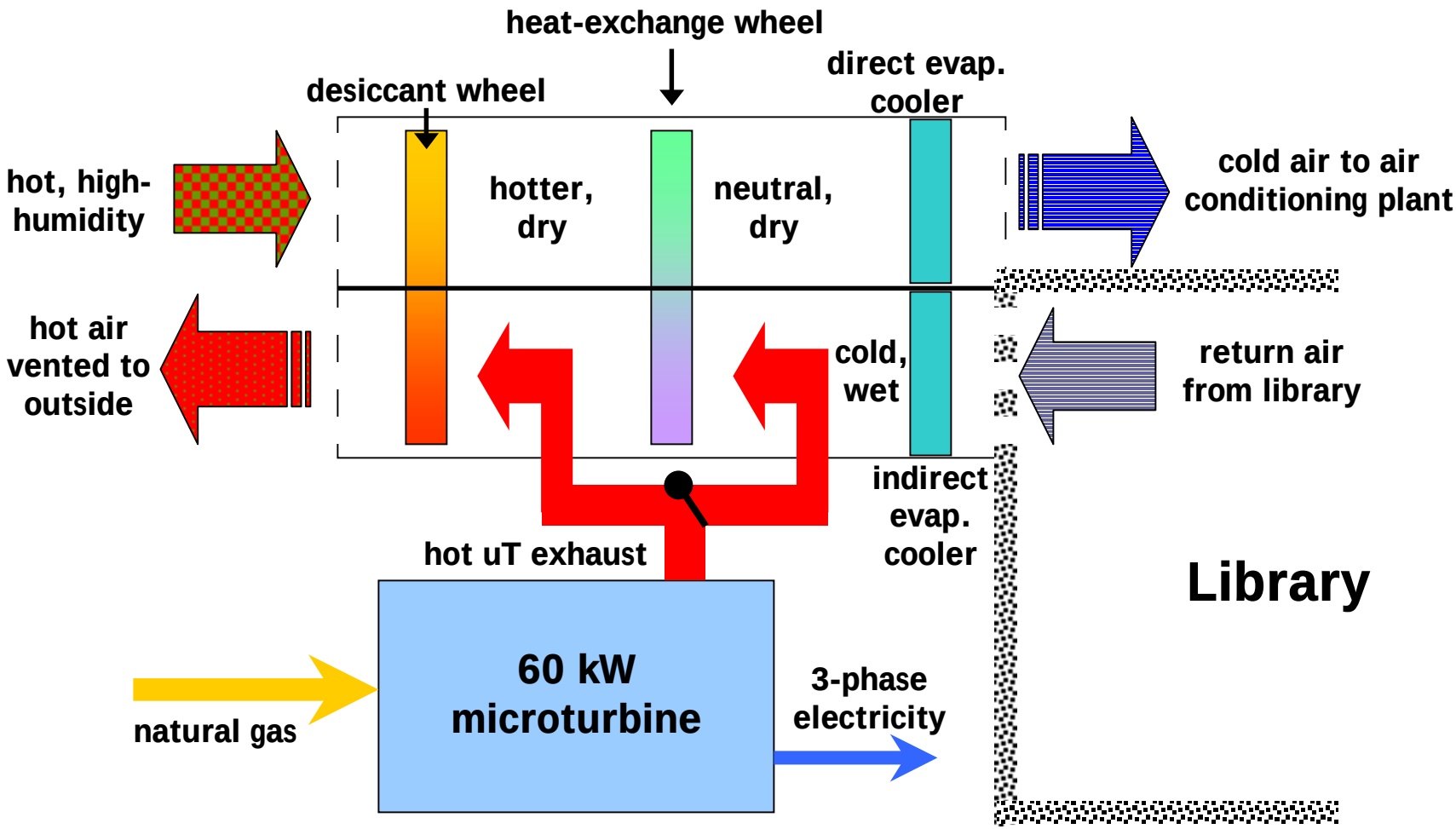

Proposed System Components

- microturbine and dual wheel desiccant cooler

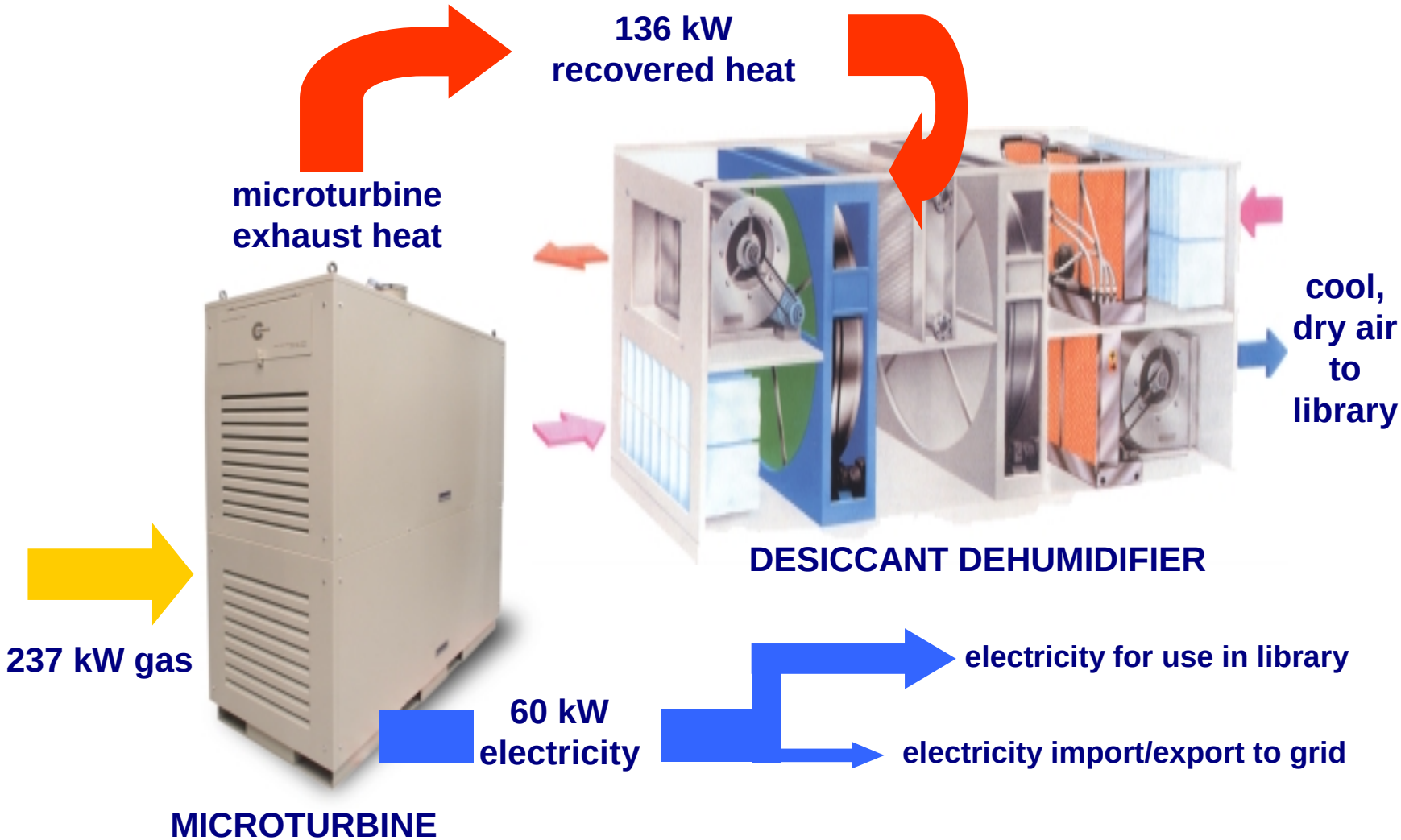

CSIRO Modelling of Proposed System

PRESENT

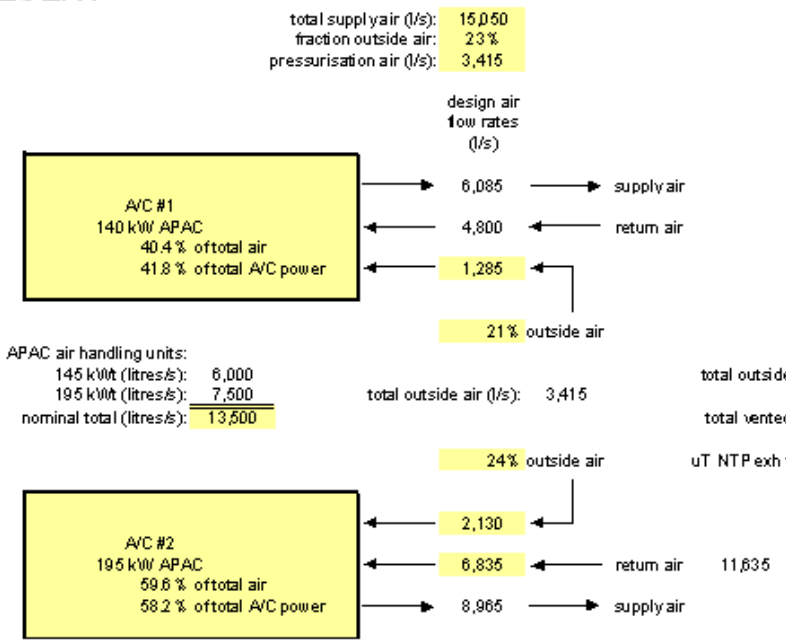

PROPOSED

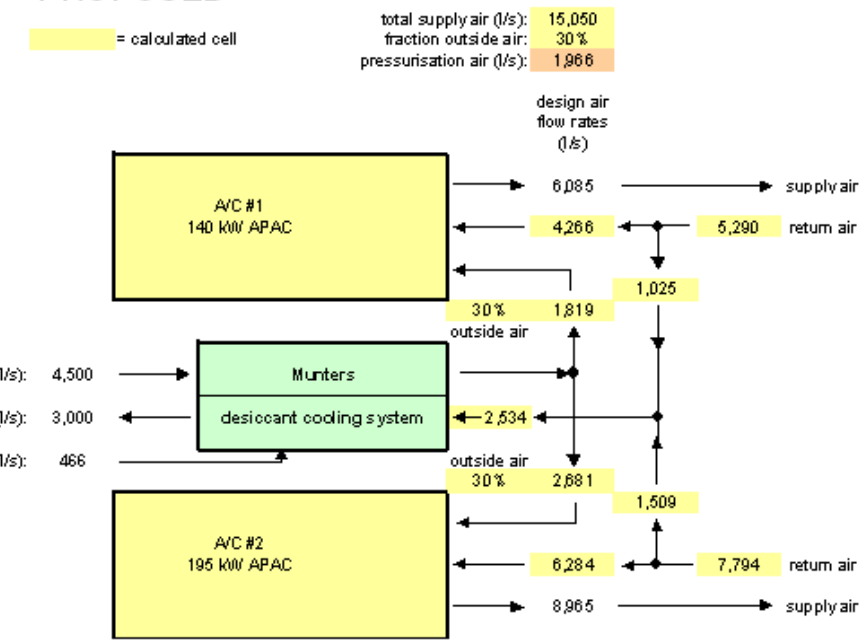

Building pressurisation requirements

"rule of thumb" excess air flow per m2 of floor area (l/s per m2):	0.25	
library floor area (m2):	3,000	
excess air requirement (l/s):	750	

0.193672
0.299003

Additional ventilation rates (l/s)

EF-1 (ground floor W/C):	547	controlled with A/C plant
EF-4 (mezzanine floor W/C):	102	controlled with A/C plant
EF-2 (photocopy room):	500	controlled via switch in photocopy room
EF-3 (tenant W/C):	90	controlled with room light switch

TOTAL minimum required pressurisation air (l/s): 1,989

Funding for Hornsby Library Project

Funding Providers:

- *Hornsby Shire Council*
- *Australian Greenhouse Offices*
- *CSIRO Energy Technology (project management)*

Project Manager

- *CSIRO Energy Technology*
- *Engineer Rob Helstroom*

Estimated Project Cost:

- *$US250,000*
- *Equipment Cost $US170,000*

Future for Hornsby Library Project

- *Feb/March - microturbine installed*
- *March - desiccant cooler installed*
- *April - system commissioning & optimisation*
- *May CO_2 count commences*
- *May 2004, CO_2/energy savings determined*

New CSIRO Energy Centre

- *Located in Newcastle, large regional coastal city 200 km north of Sydney*
- *Expected occupation July 2003*
- *April 2003 - system commissioning & optimisation*

CSIRO

ENERGY TECHNOLOGY

THE CSIRO NEWCASTLE ENERGY CENTRE

- *An international showcase demonstrating current and future energy technologies*
- *A base for industry partnership in energy R&D*
- *An energy and environmental resource centre for local industry and community*
- *An education centre for the application of clean energy technologies*

Features

Active Energy Systems

- *Two 60 kW natural gas fired Capstone micro turbines*
- *Three 20 kW and one 100 kW wind turbine*
- *Photovoltaic arrays up to 90 kW*
- *Waste heat from generation systems used for hot water and office/laboratory heating*
- *Grid interactive*

Future Additions:

- *Four 25 kW fuel cells powered by natural gas*
- *Battery power storage of 500 - 1000 kWh*

CSIRO

ENERGY TECHNOLOGY

CSIRO Forestry Products

- *Wood gasification coupled with microturbine technology*
- *Aims to produce electricity in 30-200kW range*
- *Process produces high value carbon char plus electricity using residual gas from process*
- *Target location in regional areas where wood resources available and local electricity cost high*
- *Prototype Green Gasifier Generator targeted for prototype operation in 2004*

CSIRO

ENERGY TECHNOLOGY

Newcastle University

- *University located in Newcastle, north of Sydney*
- *Internationally recognised for practicing ecologically sustainable principles on its Callaghan Campus*
- *Currently installing 30kW Capstone in Medical Science building*
- *Provides power and hot water to building*
- *Using Unifin heat exchanger*
- *Low gas pressure at site, 7 kPa (1 psi)*
- *Commissioning due end January 2003*
- *Unit to operate Peak/Shoulder (i.e. Mon - Fri 7am to 10pm).*

Summary

Project	*Micro Turbine*	*Operation*	*Waste Heat Use*	*Thermal Eff. %*
Nth Ryde	*30kW*	*24 hrs*	*None*	*22*
Newcastle Uni	*30kW*	*7am-10pm wk dys*	*HW*	*60+*
CSIRO Energy Centre	*2x60kW*	*7am-10pm wk dys*	*HW*	*70+*
Hornsby Library	*30kW*	•*Sun:1200 - 1700* •*Mon-Fri: 0800 - 2100* •*Sat: 0800 - 1700*	*Regentn*	*70+*
CSIRO Forestry	*30kW*	*24 hrs*	*Process*	*60+*
CSIRO Atmospheric Research	*60-80kW*	*7am-7pm wk dys*	*HVAC*	*70+*
CSIRO Marine	*60kW*	*7am-10pm wk dys*	*HVAC/HW*	*70+*

CSIRO Energy Technology

- *For more information contact us at:*

  www.det.csiro.au

  Then click on “About Us”

Projects Currently Under Evaluation

CSIRO Atmospheric Research

- *Located in Melbourne bayside suburb of Aspendale*
- *Aspendale site currently experiences problems with quality of power & has critical power needs for laboratories*
- *Atmospheric Research seeks to improve environmental performance, especially greenhouse gas emissions, whilst servicing standby power and HVAC requirements*
- *Already lowest greenhouse gas performance for CSIRO*

CSIRO Atmospheric Research

- *The proposed process consists of microturbine(s) to supply electricity and direct heat to an absorption chiller and for space cooling & heating*
- *To eliminate the need for a cooling tower for the absorption unit, proposed that the local high water table be examined as a heat sink*
- *To keep microturbine performance at peak, also proposed to cool inlet air through ground water during summer*

CSIRO Atmospheric Research

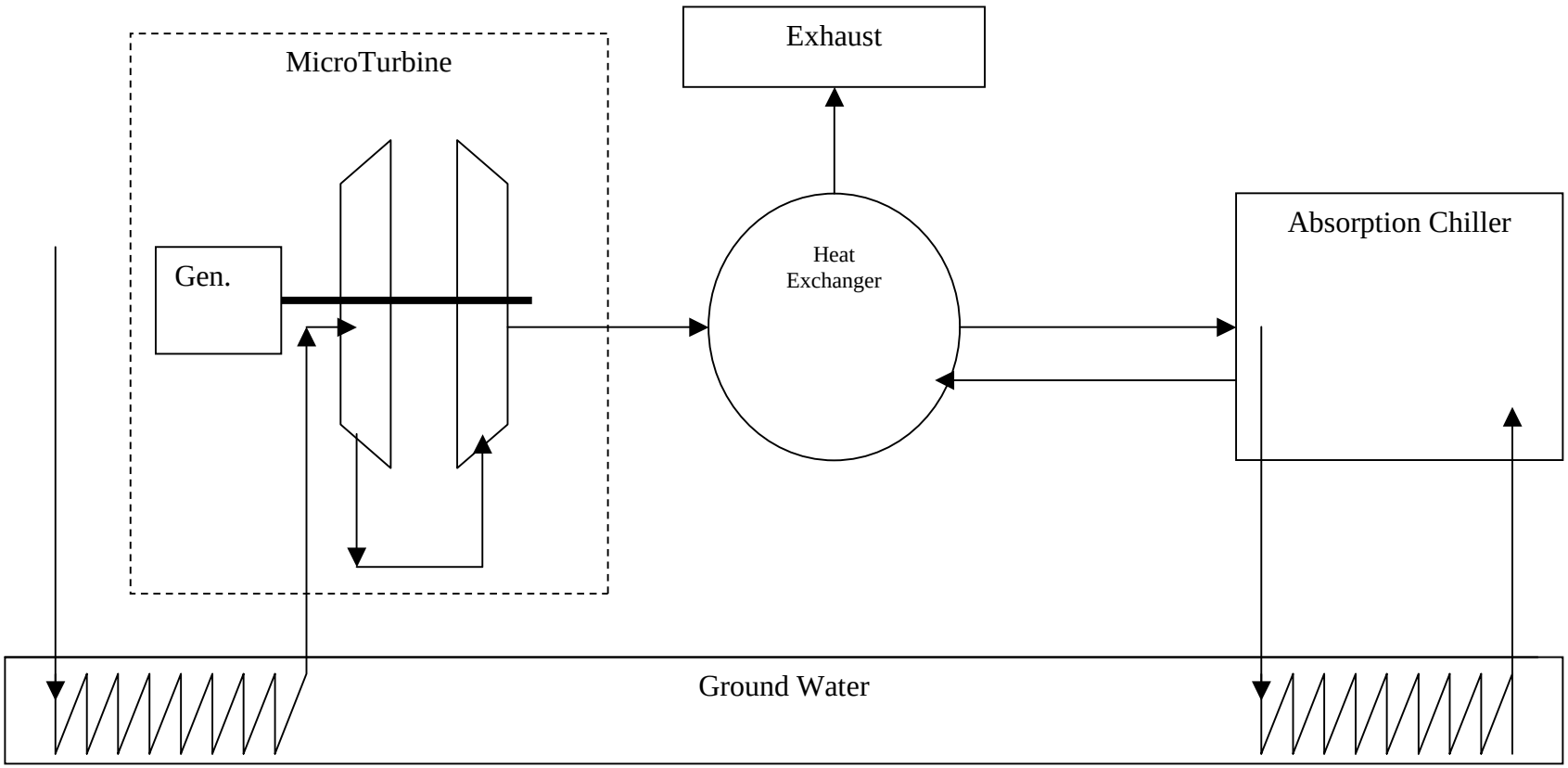

CSIRO Marine Research

- *Located at Cleveland, a Brisbane suburb on Moreton Bay*
- *Critical need to protect prawn (shrimp) breeding stock*
- *Desire to lower site summer peak electrical demand charges and greenhouse gas emissions*
- *Sea water used for breeding provides possible ideal heat sink for low grade waste heat*

CSIRO Marine Research

- *Examining the feasibility of using microturbines in conjunction with absorption chillers (direct use) for air conditioning and power purposes on the Cleveland site.*
- *Site has critical power supply needs because of breeding stock.*
- *To improve the microturbine efficiency in summer, the project will look at drawing the microturbine combustion air from the exhaust air from the conditioned space.*
- *Feasibility study to look at system integration feasibility, heat exchange of absorption waste heat to sea water, capital costs, operating costs, possible use as industry model and reduction of greenhouse gas emissions.*
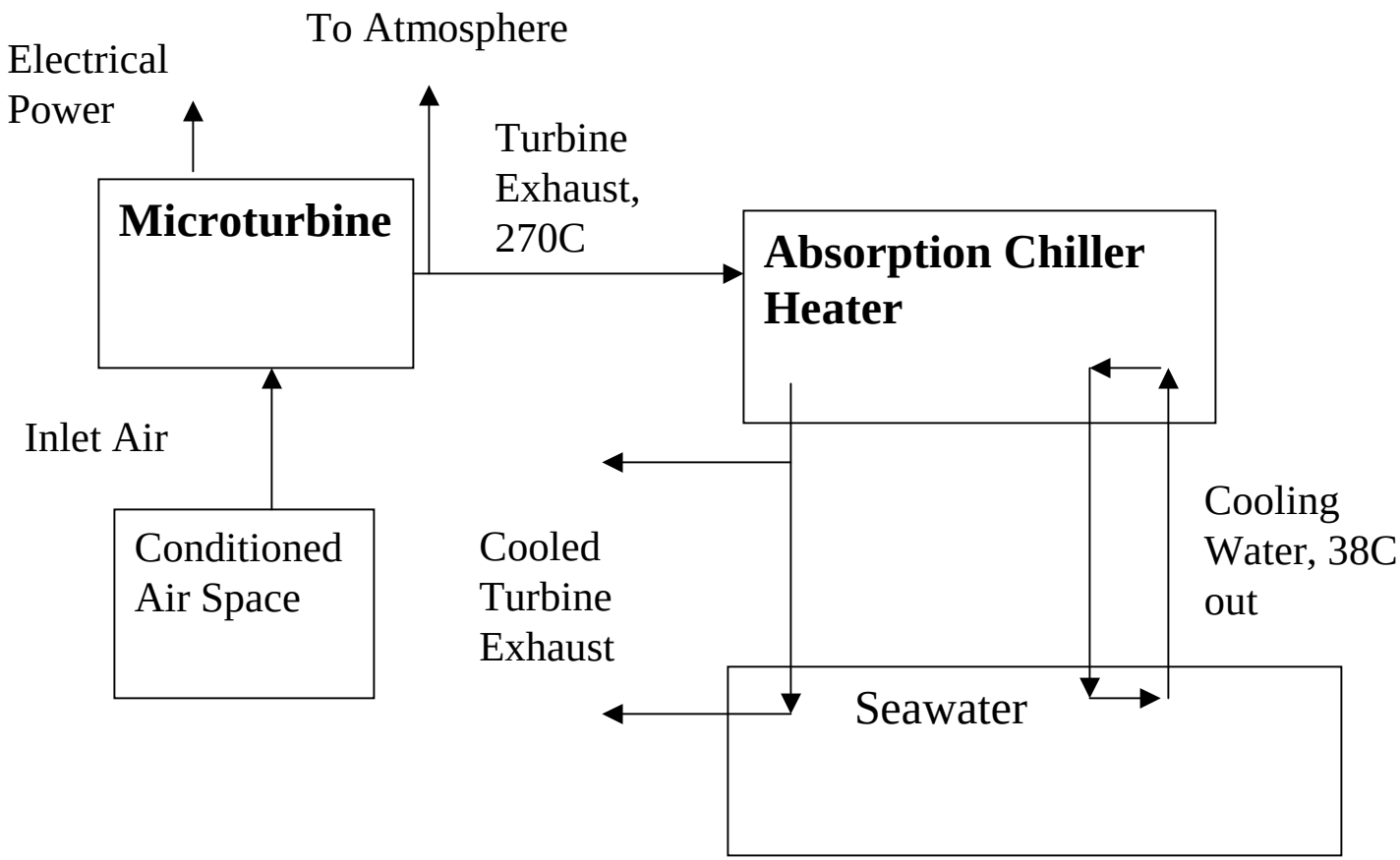
CSIRO Marine Research