175 kW Microturbine Development

John Bowen GE Global Research

Advanced
Integrated
Microturbine
System

imagination at work

Organization

Project Manager(s): Mike Bowman/Karl Sheldon

Funding Partners: DOE

Engineer: John Bowen

Project Plan: Design/Build and Operate 175 kW Microturbine with focus on AIMS program objectives

Project Description and Goals/Objectives

Project Objective

The objective of the AIMS program is to develop the next generation microturbine system that will advance the current generation system into a more efficient, cost effective, and environmentally friendly system. The resulting system will be designed such that it addresses both the current and emerging distributed generation markets.

Objectives

- 35% Efficient Design w/ Growth to 40%
- 175 kW Output with growth to +250 kW
- ≤ 10 ppm NOx on Natural Gas
- ≤ 10 ppm CO on Natural Gas
- ≤ $500/kW unit cost
- 11,000 hour maintenance interval
- 45,000 hour life

Project Team/Partnership

AIMS Program

Market Study

Onsite Energy/ GE Energy
- Market Study

Technology Concepts

GE Research
- Thermal analysis of cycle
- Advanced technology screening

GE Research /PSEC/GEIS
- Control system definition

Laboratory Evaluation

GE Research/Turbo Genset
- Integration of developed components into the new system
- Evaluation of the system in a laboratory environment

Demonstration

GE Research / GE Energy
- 4000 hour demonstration of developed microturbine system

Component Development

GE Research/ Concepts NREC/ GE Energy
- Component development & testing

GE Research/ Kyocera/ ORNL
- Advanced material components
- Advanced material characterization
- Ceramic testing for database

GE Research/ GEIS/ Turbo Genset
- Power electronics development
- High speed alternator development

Systems Design

GE Research/ GEPS
- System integration issues
- Acoustic considerations

GE Research/ GEIS/ GEPS
- Control system development

Business Plan

GE Energy
- Business plan based on market analysis, product feasibility and technology maturity

Task Definition and Activities by Task

Task Name	Definition	Activity
Market Study	Conduct an in-depth market study to understand impact of a “new” microturbine design. Use results to steer R&D efforts.	Complete
Conceptual Design	Re-evaluate proposed design based on market study results and more detailed analytical analysis	Complete
Component Design	Conduct detailed design and fabrication of specific system components.	Complete
System Design	Design of component integrations, balance of plant, controls and safety systems.	Complete
Lab Evaluation	Conduct detailed subsystem and full system experimental evaluations & compare with analytical predictions	In Process
Demonstration	Implement developed system into operation for a designated period of time	On Hold Pending Lab Results
Business Plan	Business plan for utilization of the developed technology	On Hold Pending Lab Results

175 kW Microturbine

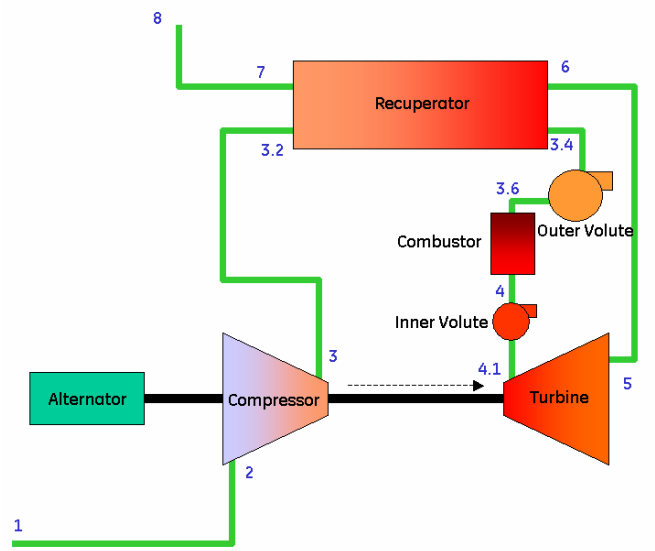

Schematic

Actual Installation

Milestones Completed and Planned

Program Milestones	Scheduled Completion
Market Study	Dec. 2000
Conceptual Design Complete	Apr. 2001
Component Designs Complete	Nov. 2002
System Design Complete	May 2003
Component Fabrication Complete	Feb 2005 (Aug 2003)
Systems Integration	May 2005 (Oct 2003)
Systems Evaluation	May 2006 (Jan 2004)
Business Plan	Jun 2006 (Mar 2004)
Demonstration	On Hold (Sep 2004)

Key Technical Barriers

40% Electrical Efficiency → Materials Challenges

Actions:

- Drive component efficiencies as high as possible to minimize temperature requirement
- Optimize flow path to reduce losses
- Prove out all but new materials by building a “low” temperature system

In case of Turbine, result is higher exhaust temperature which drives material requirements on recuperator.

Higher combustor inlet temperatures makes controls more difficult.

Project Risks

- Rotor stability of the cantilevered system
- Alternator construction because of material requirements
- Transition of speed control from electrical to chemical
- Combustion stability, ignition and dynamics
- Transient operation with stored energy in recuperator
- Material stresses and life and full speed full load conditions
- Realized performance levels

Project Risks – Initial Operation

Event: Wire failure and rotor assembly movement

- Electrically spinning assembly to validate rotor dynamics
- Spinning at ~31000 rpm (69% speed) when drive system shut down

Issue: Wire failure inside Power Electronics cabinet

- After wires were replaced, system had a turbine rub
- Assembly CT Scanned to detect any separation
- Assembly pressed to reseat and rebalanced

Theory: Compressor wheel was hotter than turbine due to compressor work thereby causing compressor to expand more than turbine which opened interference fit

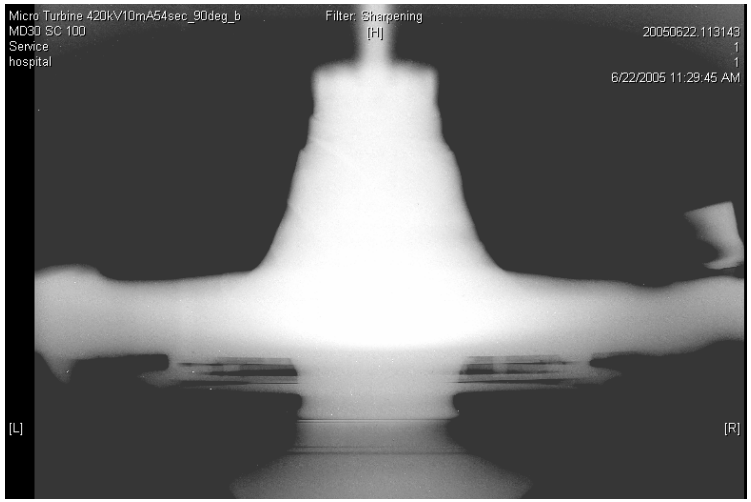

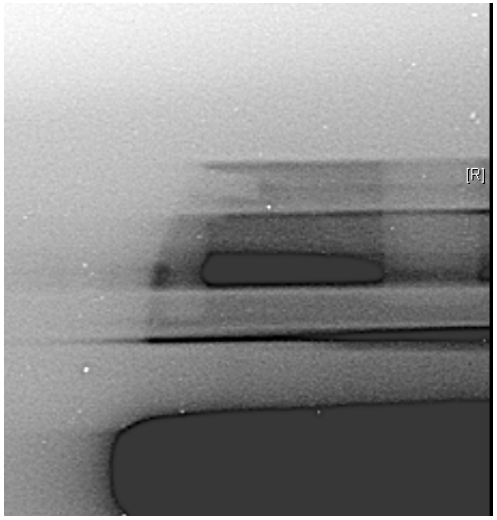

Experimental Results

Temperature Distribution Around Nozzle Ring

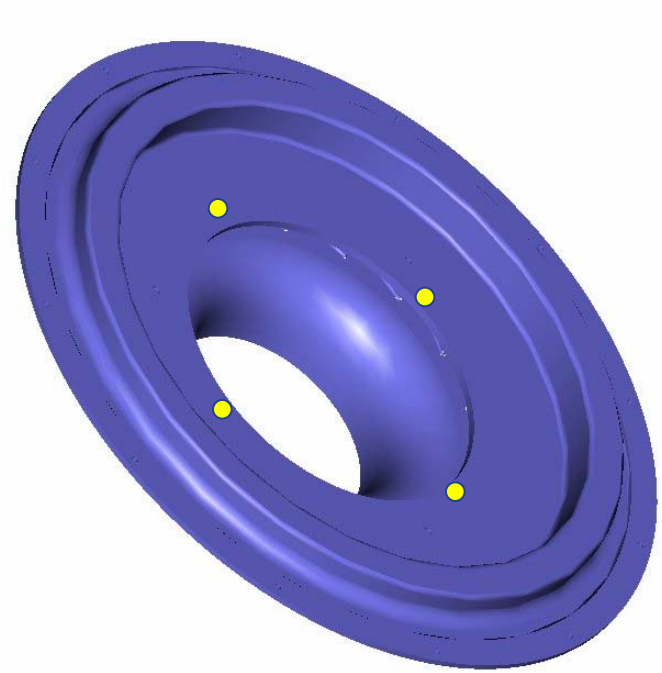

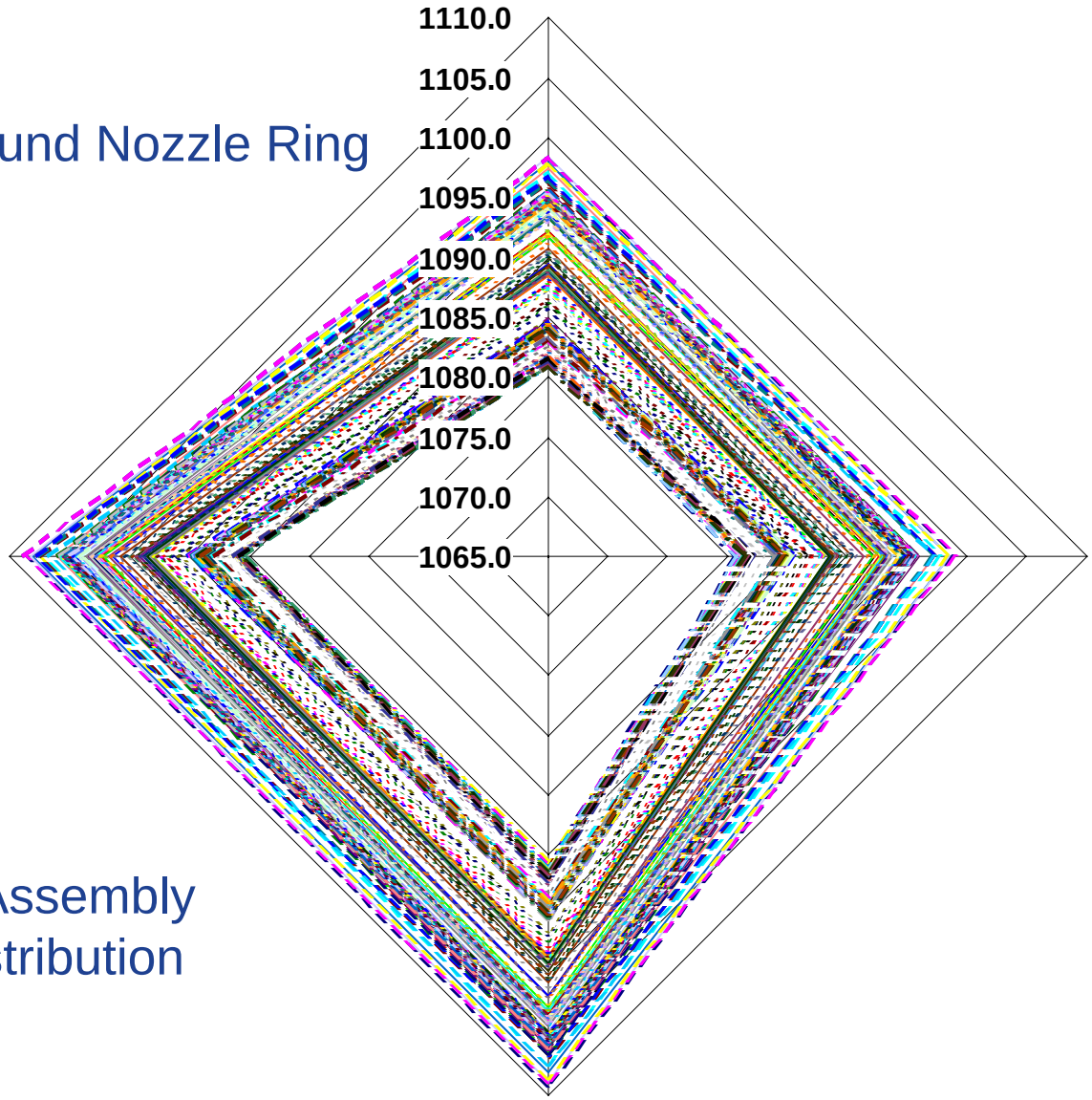

- Highest Stress Piece in Assembly
- Minimal Temperature Distribution

imagination at work

Experimental Results

Recuperator Time Constant Determination

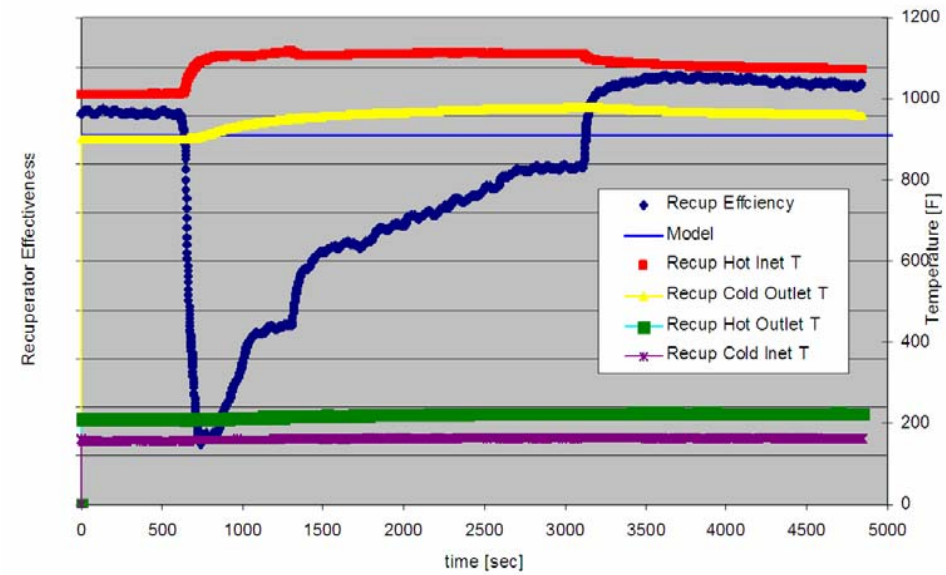

Increase of 100F into Recuperator

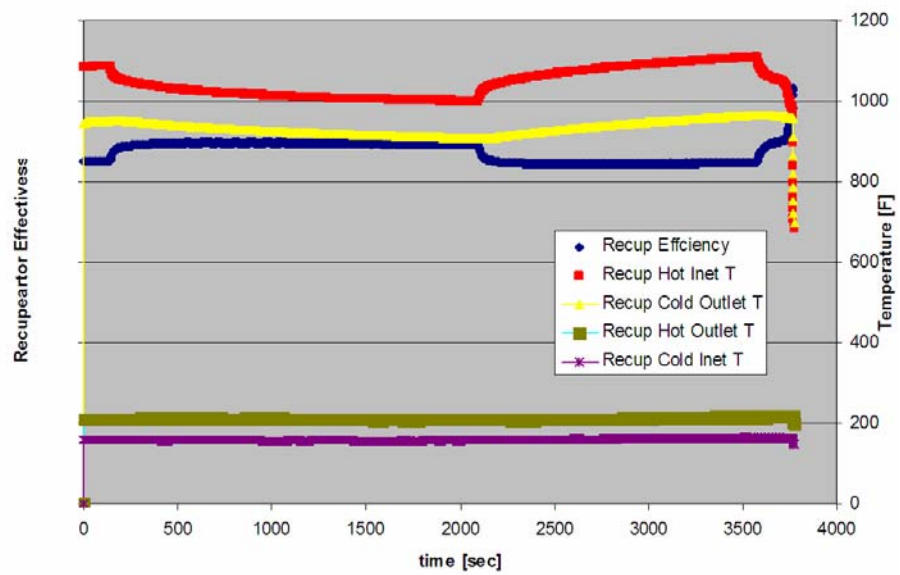

Decrease of 100F into Recuperator

Time Constant is key for Control Logic

imagination at work

Experimental Results

First Run with Speed Control via Combustion

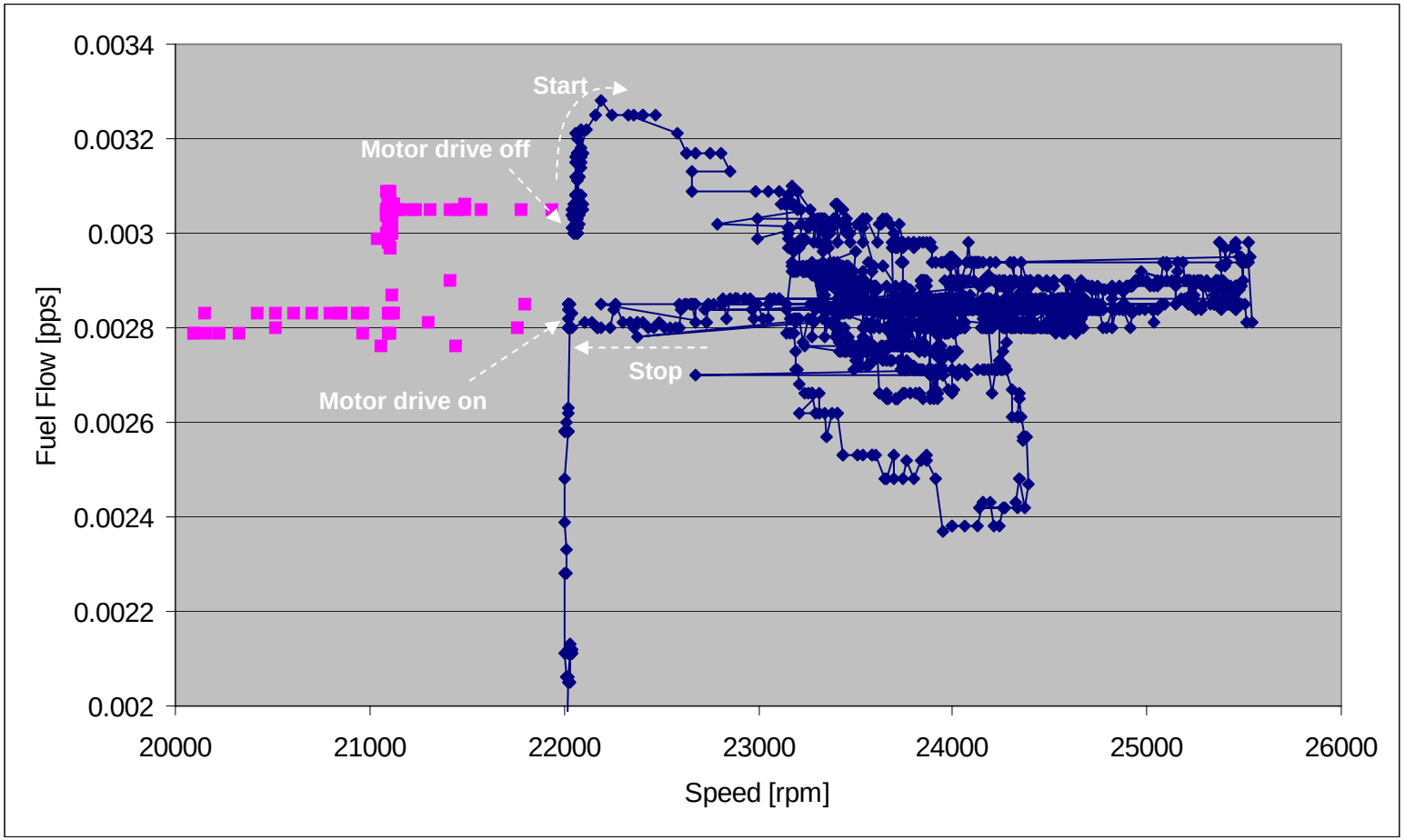

- Verified transition from Electrical to Chemical
- Speed very sensitive to fuel flow
- System is semi-self damping

imagination at work

Key Technical Progress

Idle Point Testing

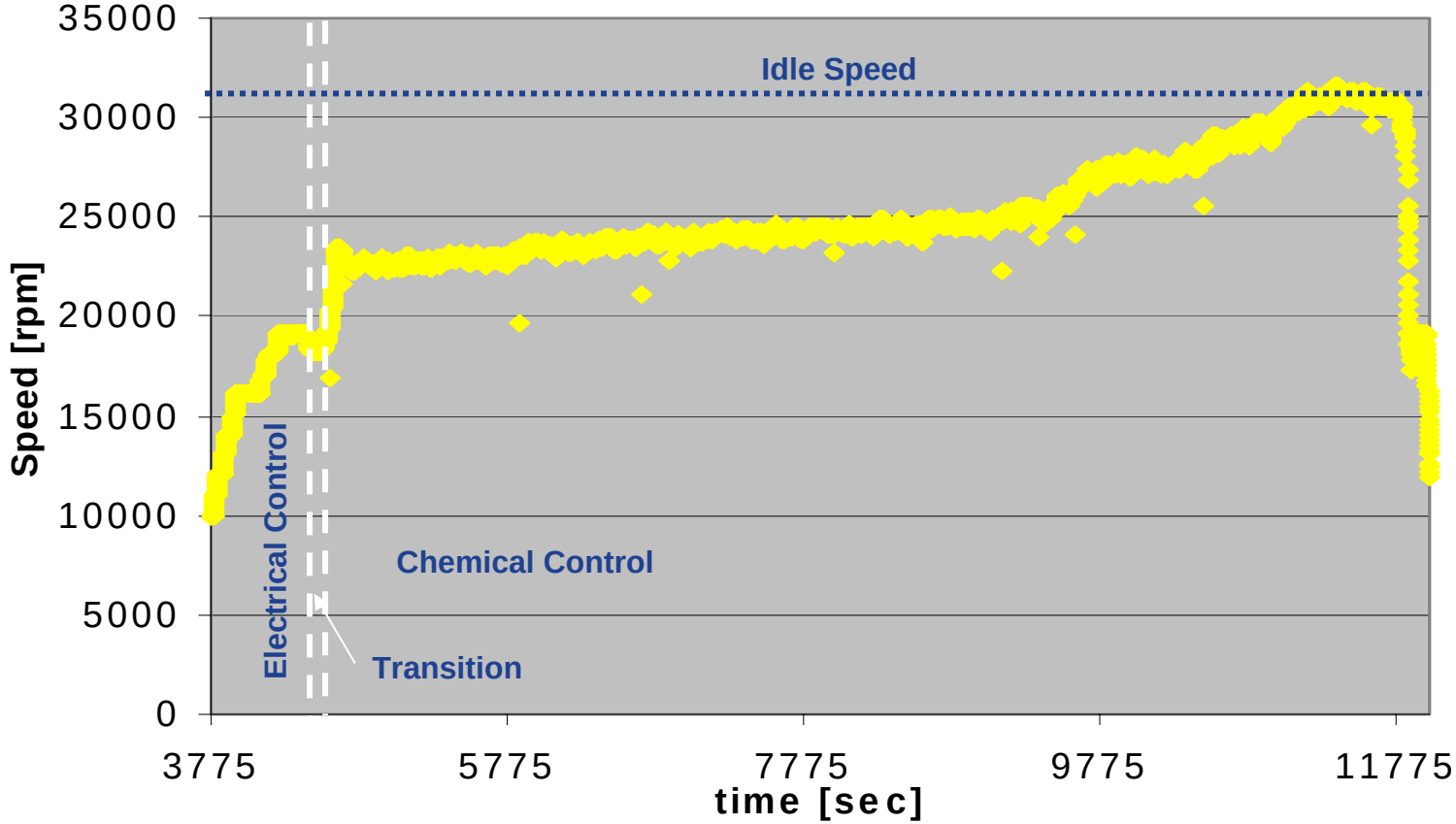

- Stable Operation through 2nd Critical
- Very Controllable on Combustion
- Ability to "Idle" at any point in speed range

imagination at work

Key Technical Progress

	Average Data from 081805b.xls (t=1.0 thru 1.2)	Model Prediction	% Error
T_fuel	75.14	Matched on	N/A
T2s	101.30	Matched on	N/A
T3s	201.57	Matched on	N/A
T32s	201.48	201.53	0.02%
T34s	898.12	903.33	0.58%
T36s	796.28	Matched on	N/A
T41	1074.27	Matched on	N/A
T5s	971.81	Matched on	N/A
T6s	967.96	968.33	0.04%
T7s	284.03	Matched on	N/A
P3s	21.67	Matched on	N/A
P36s	21.21	21.2	0.05%
P5s	14.72	14.75	0.19%
P6s	14.84	14.82	0.14%
Speed	24343	Matched on	N/A
Recup Cold DP	0.472	Matched on	N/A
Recup Hot DP	0.113	Matched on	N/A
Combustor DP	0.442	Matched on	N/A
Fuel Flow	0.00286	0.00227	20.72%
HPX	0	Matched on	N/A
Airflow	No Direct Measure	1.025	N/A
Eta_rec	No Direct Measure	88.48%	N/A
Eta_comp	No Direct Measure	66.45%	N/A
Eta_tur	No Direct Measure	73.03%	N/A
Rotor Loss	No Direct Measure	1.529 hp	N/A
HPC Power	No Direct Measure	35.2 hp	N/A
HPT Power	No Direct Measure	36.78 hp	N/A

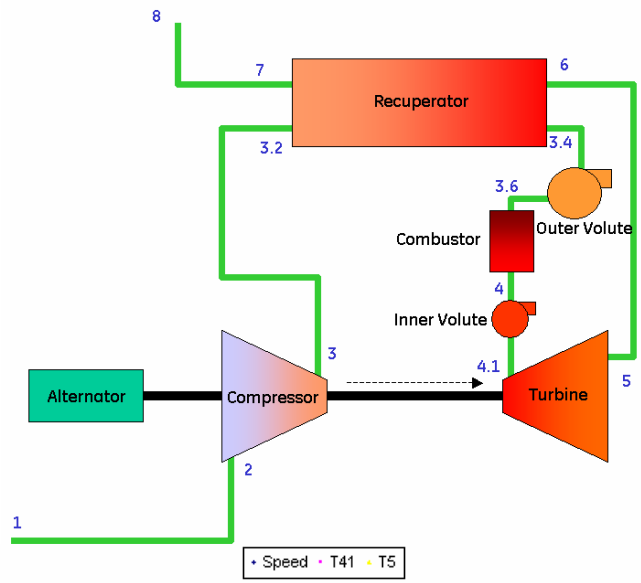

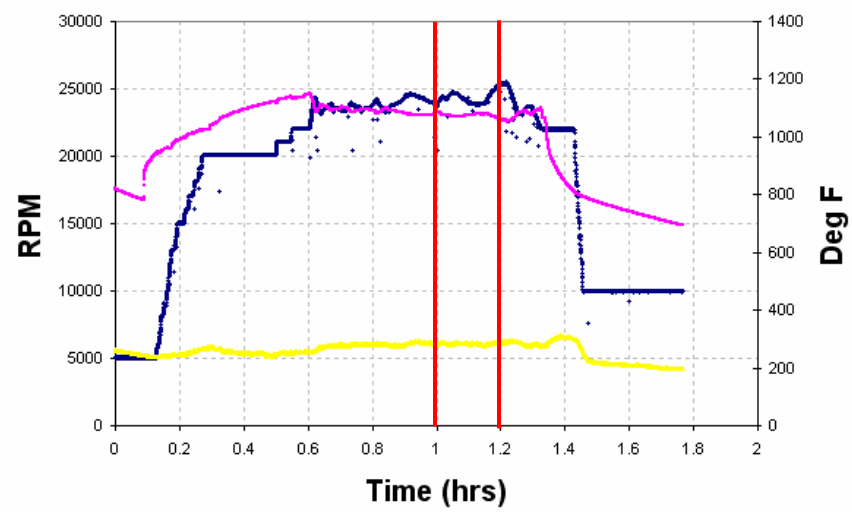

Benchmark of experimental data to performance model at idle condition

imagination at work

Key Technical Progress

Test Objective: Full Speed

- Achieved 90% when incident occurred
- Failure mechanism was exactly as designed
- In process of assembling new alternator
- RCA work suggests no design flaws or operational concerns

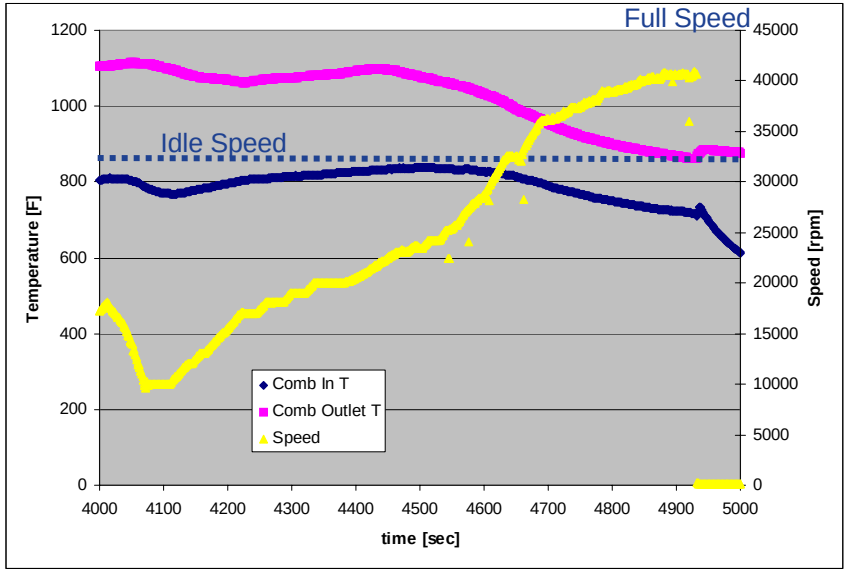

Performance Specifications to Achieve 40%

35% Efficient Machine

Pr=3.8

T_{41}=1750 F

η_{comp}=0.83

η_{turb} =0.87

η_{recup} =0.90

Hot Section Technology:

- REN108
- Hastelloy-X
- GTD222

40% Efficient Machine

Pr=4.2

T_{41}=2000 F

η_{comp}=0.83

η_{turb} =0.87

η_{recup} =0.92

Hot Section Technology:

- NiSb
- Silicon Nitride
- Turbine Cooling (axial)

imagination at work

Impact of Project

Action	Impact
- The project is developing state-of-the-art turbo machinery	- The result will be a very efficient microturbine system
- Ultra-low combustion system (3.4 ppm NOx & 8.4 ppm CO)	- Environmentally conscious design
- Design knowledge for a 40% electrical efficient system and materials data for the specific conditions	- Smart, practical design decisions that will result in a prudent product
- Advanced casting methods for super alloys	- Improved performance of large frame GT's and Aero Engines

Summary
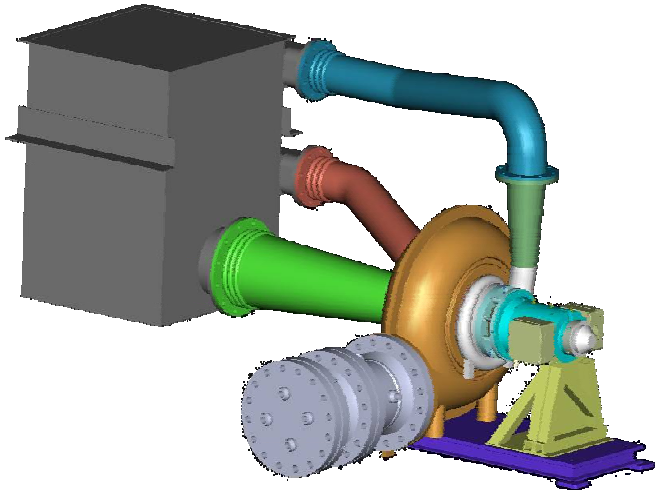
- Team has made tremendous progress
- A few technical issues but worked through them
- Project is now on track to demonstrate full system
- Continue to have close tie with GE Businesses