Capstone Microturbine CHP/Absorption Chiller Applications

January 17, 2006

Presented by: EBMUD

Dado Hernandez, P.E. – Frank Pizzimenti, P.E.

Outline

- Project Organization
- Project Plan Vs Actual Dates
- Project Scope
- Costs
- Construction Activities
- Performances – Electrical, Thermal, Emission and O&M
- Experiences

Project Organization

- Dado Hernandez - Project Manager
- Frank Pizzimenti - Project Engineer
- Ted Lam – Maintenance Superintendent
- Contractor – Marelich Mechanical Co., Inc.
- Capstone Supplier – CALPWR, Inc.

Project Plan Vs Actual Dates

Schedule

- Planning – 10/2001
- Design – 5/2002
- Construction – 11/2002
- In-Service – 12/2002

Actual

- Planning – 10/2001
- Design – 4/2002
- Construction – 12/2003
- In-Service – 8/2003

- Air Quality Permit – 1 Year

Project Scope and Benefits

- Project constructed the following systems:
  - 600 kW Microturbine Cogeneration at Admin Bldg (AB)
  - 200 Ton Absorption Chiller at AB
  - 120 kW Microturbine Cogeneration at Adeline Maintenance Center (AMC)
  - 30 kW Photovoltaic at AMC
- Project Benefits:
  - $ 900K Rebate from PUC/PG&E
  - $ 2M Low-interest loan at 3% from CEC
  - $ 200K in District's annual net energy cost savings

Project Costs

Actual	100% Hindsight
Planning - $50K	Planning - $100K
Design - $200K	Design - $100K
Const Mgmt - $470K	Const Mgmt - $260K
Construction - $3.8M	Construction - $3M

Unexpected Costs:
-Air Permit (Community Outreach)
-Modification of Rate Structure
-Hired Financial Consultant
-Worked with PG&E and CEC on Grants and Loans
-Building Permit Coordination

Detailed Project Costs - AB Only

Actual: Total = $2,510K

- Design - $125K
- Permit - $30K
- 10-MT - $1,100K
- EMCS - $85K
- Waste Heat - $80K
- Installation, CM - $410K
- Elec. Conn. - $75K
- Gas. Conn. - $55K
- Mobilization - $90K
- Absorp. Chiller = $360K
- Warranty - $100K

Construction Activities

- Project Scope at AB:
  - 600 kW Capstone Microturbines
  - 200 Ton York Absorption Chiller

- Technical Aspects:
  - Combined Heat and Power
  - Heating and Cooling

The Big Crane

The Lift

Up Up and Away

The Squeeze

Inches to Spare

com

Chiller In-place

The Micros In-Place

d.com

The Turbines and the Tribune

com

The Compressors In-Place

Early A.M. Shift

Power Conduits and Pipes

com

Electrical Performance

YEAR	kWh	$/kWh	PG&E $/kWh	Demand Red. Months/Yr (*)
2003 (6 mo.)	811,960	0.110	0.149	2
2004	1,851,417	0.108	0.139	9
2005	1,569,668	0.136	0.133	10

(*) – Average Demand Reduction = 400 kW

Electrical Performance (cont'd)

Hours of Operation

- MT Unit 1 = 19,000
- MT Unit 2 = 14,000
- MT Unit 3 = 11,000
- MT Unit 4 = 7,000 (*)
- MT Unit 5 = 8,000
- MT Unit 6 = 5,000 (*)
- MT Unit 7 = 6,000
- MT Unit 8 = 6,000
- MT Unit 9 = 7,000
- MT Unit 10 = 6,000

* Turbine Replaced

Compressors

- Compressor 1 = **
- Compressor 2 = 11,000
- Compressor 3 = 8,000
- Compressor 4 = 7,000
- Compressor 5 = 6,000

** Replaced 2X

Chiller

- Chiller = 3,300

Microturbine Cogeneration System Schematic

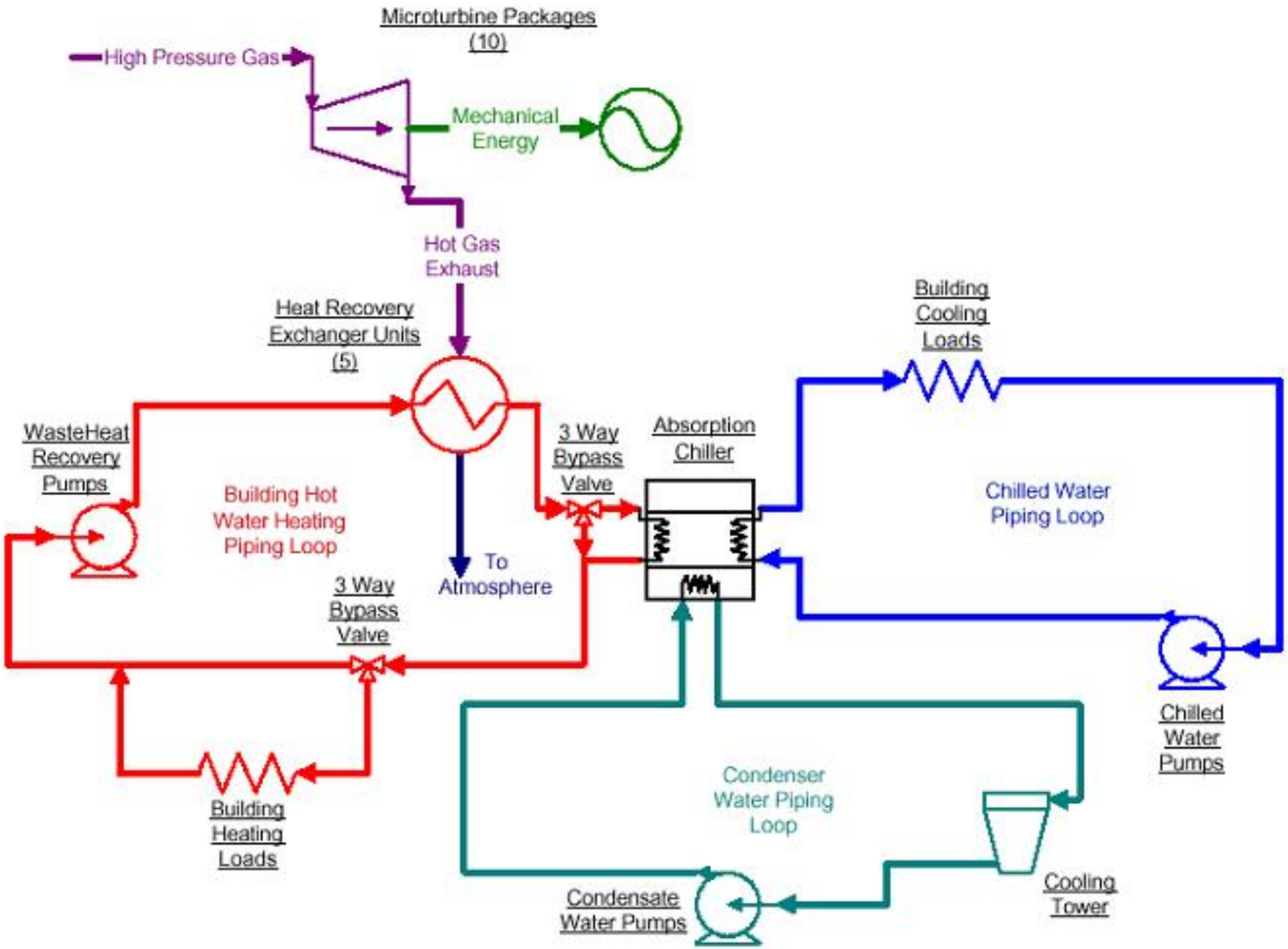

NAB - Prep Microturbines Plant Efficiency

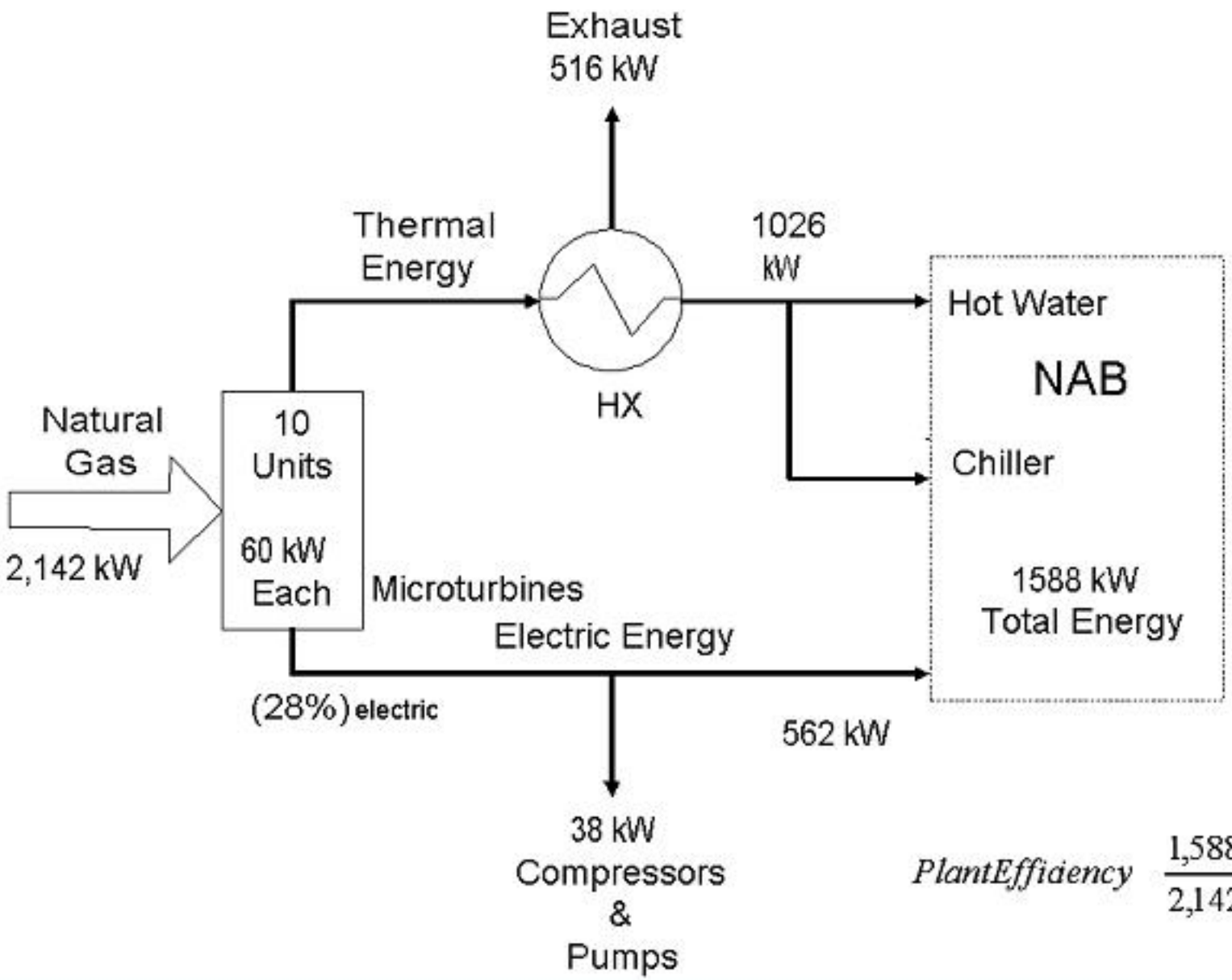

$$PlantEfficiency \quad \frac{1{,}588kW}{2{,}142kW} \quad 74.14\%$$

74%

Thermal Performance

- Thermal Output = 1,026 kW
- Ave H_2O Supply Temp = 180^0 F
- Ave Delta T across HX = 10^0 F
- CHP Efficiency = 74%
- Cooling System Performance COP = 0.85

Emission Performance

Parameter	Ave. of 3 Tests
Nitrogen Oxides, NOx	= 2.01 ppm
NOx @ 15% O_2	= 3.79 ppm
NOx Emission Rate	= 0.02 lb/hr
Carbon Monoxide, CO	= 2.39 ppm
CO, @ 15% O_2	= 4.50 ppm
CO Emission Rate	= 0.01 lb/hr
Total NMOC	= 0.90 ppm
VOC Emission Rate	= 0.002 lb/hr
Oxygen, O_2	= 17.77%
Stack Gas Flow Rate	= 1,078 dscfm

Emission Performance (cont'd)

Pollutant	Emission Factor (lb/MMscf)	Annual Emissions (lb/yr)	BAAQMD Trigger Level (lb/yr)	Exceeds Trigger? (Yes/No)
1,3 Butadiene	1.33E-04	9.54E-03	1.10E+00	NO
Acetaldehyde	5.11E-01	3.63E+01	7.20E+01	NO
Acrolein	6.93E-02	4.92E+00	3.90E+00	YES (Note 1)
Benzene	9.90E-02	7.03E+00	6.70E+00	YES (Note 1)
Formaldehyde	6.52E-02	4.63E-07	3.30E+01	NO
Hexane	3.82E-01	2.71E+01	8.30E+04	NO
Naphthalene	7.88E-03	5.60E-01	2.70E+02	NO
PAHs	7.78E-04	5.53E-02	4.40E-02	YES (Note 1)
Benzo(a)anthracene	1.34E-04	9.52E-03	4.40E-02	NO
Benzo(a)pyrene	9.16E-05	6.51E-03	4.40E-02	NO
Benzo(b)fluoranthene	6.72E-05	4.77E-03	4.40E-02	NO
Benzo(k)fluoranthene	6.72E-05	4.77E-03	4.40E-02	NO
Chrysene	1.50E-04	1.07E-02	4.40E-02	NO
Dibenz(a)anthracene	1.34E-04	9.52E-03	4.40E-02	NO
Indeno(1, 2,3-cd)pyrene	1.34E-04	9.52E-03	4.40E-02	NO
Propylene Oxide	5.87E-02	4.17E+00	5.20E+01	NO
Toluene	1.68E-01	1.19E+01	3.90E+04	NO
Xylene	6.26E-02	4.45E+00	5.80E+04	NO

Note 1: Based on BAAQMD calculation, these annual emissions produced by 10 MTs would have a maximum increased cancer risk of 0.2 in a million and a maximum increased chronic hazard index of 0.02. Acceptable is 1 in a million and a chronic hazard index of 1.

Operational Experiences

- Capstone Digital Power Controllers (DPC) failures due to overheating
- CompAir compressors failures due to bronze oil filters
- Capstone Igniters failures
- MicoGen Heat Recovery Unit failures
- MicoGen Inlet Gas Diverters replacement
- Energy Management Control System improvement is needed

Institutional Experiences

- Air Quality Permit – 1 Year Process, 1000 feet from Schools, RSA performed
- Building Permit – Gas connections, Fire Codes, Noise Ordinances
- PG&E Permit – Interconnection on a Network, Reverse Power Relays, etc.
- Contractor Support – Transfer of warranties by equipment suppliers
- CEC Loan & PG&E Rebate – Performance of Energy Study, Economic Analysis, Agreements.

Questions?
NOV 27 2002