Synchronization of chaotic mode hopping

Yun Liu and Peter Davis

ATR Adaptive Communications Research Laboratories, 2-2 Hikaridai, Seika-cho, Soraku-gun, Kyoto 619-0288, Japan

Received December 14, 1999

We propose and demonstrate a scheme for generating synchronized chaotic mode hopping in two wavelength-tunable lasers whose tuning range covers multiple longitudinal modes. Chaotic mode hopping resulting in large hops in wavelength is induced by delayed electrical feedback. We show that, by coupling part of the output of one laser into another, one can synchronize the chaotic mode hopping of two separate lasers and obtain synchronized chaotic on–off modulation patterns in multiple corresponding wavelength bands. © 2000 Optical Society of America

OCIS codes: 140.1540, 140.2020, 140.3600, 140.5960.

The topic of synchronization of chaotic oscillators has attracted increased attention in recent years because of its possible relevance to communications and biological systems.[1,2] In the context of communication, a key problem is the synchronization of a slave oscillator in a remote receiver by injection of a signal sent from a master oscillator in the transmitter. This synchronization is important when one is applying chaos to both cryptography and spectrum-spread systems, in which chaotic oscillations are used to mask or multiplex information in signals.

Although early research on chaos synchronization was performed with electric circuits,[2,3] recently there has been interest in synchronization of laser chaos. Many of the systems studied so far employed lasers with delayed feedback, owing to the simplicity of implementation and feasibility of extension to high-speed operation.[4–6] Delayed-feedback laser systems also have the potential to generate very high-dimensional and complex chaotic dynamics.[7] Another attractive aspect of chaos in a laser is the possibility of generating signals with multiple wavelengths.

In this Letter we show that it is possible to generate chaotic mode hopping among multiple longitudinal modes in a wavelength-tunable distributed Bragg reflector (DBR) laser with delayed electrical feedback. We also show that mode hopping in two similar lasers can be synchronized. The key features of mode hopping are that (a) the laser lases in one mode at a time, (b) the laser hops among different modes, and (c) the total optical power is nearly constant. Synchronization of mode hopping in two similar lasers is possible by coupling of the feedback signal of one laser into the feedback of a second laser.

The system that we use is related to the scheme used by Goedgebuer *et al.*[5] They used delayed feedback to a wavelength-tunable laser to generate chaotic oscillation and synchronized chaotic oscillation in two similar lasers. In their experiment they used a birefringence plate between crossed polarizers to generate a signal that is a nonlinear function of wavelength to feed back and control the wavelength tuning. The variation range of the wavelength was a few subnanometers, which is within the continuous-tuning range of a single mode of the wavelength-tunable laser.

In our system we use a wavelength-tunable DBR laser that has a wide tuning range over multiple longitudinal modes. We also use a wideband optical filter to obtain a nonlinear function of wavelength over a wide, multinanometer range of wavelength variation, covering multiple longitudinal modes of the laser. We tune the wavelength of the laser by changing the current injected into the DBR section of the laser. A large change in current can result in a switch to a new mode. However, since the output power is only weakly dependent on the lasing mode, the laser power can stay nearly constant even if the mode changes. With this system we are able to generate large hops in wavelength without large fluctuations in output optical power.

The experimental setup is shown schematically in Fig. 1. The light source is a wavelength-tunable DBR laser diode with a fiber output. An optical isolator with 55-dB isolation is employed within the laser

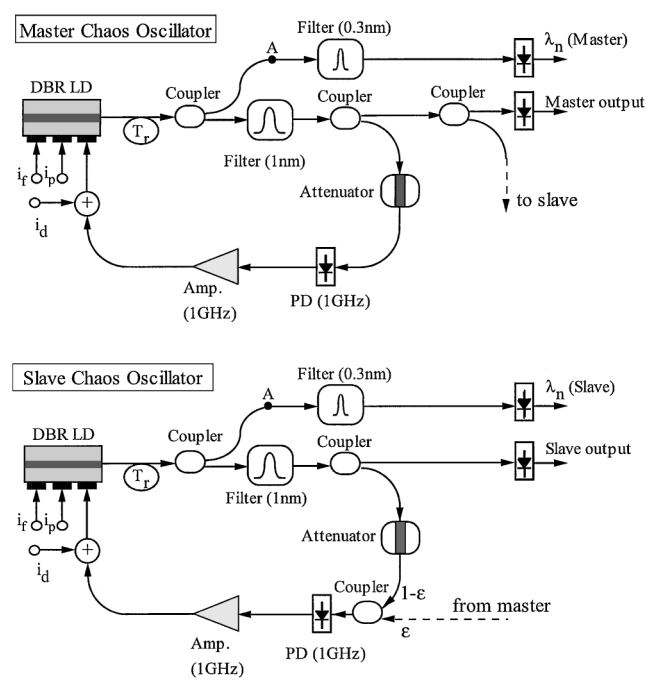

Fig. 1. Schematic diagram of experimental setup for synchronization of chaotic wavelength hopping: i_d, offset DBR current; i_p, phase-control current; i_f, laser-diode (LD) pump injection current; ϵ, coupling coefficient. The total laser output is measured at A before the wavelength filter. T_r, time delay; PD's, photodiodes.

0146-9592/00/070475-03$15.00/0 © 2000 Optical Society of America

package, which prevents external optical feedback from the fiber facet or the coupler. The wavelength of the DBR laser is tunable over 11 longitudinal modes from 1546.5 to 1554 nm. The side-mode suppression ratio is more than 45 dB, which guarantees single-mode operation. Part of the light output is passed through a polarization-independent optical tunable filter. The intensity of light output from the optical filter, which depends nonlinearly on the laser wavelength, is detected with a photodiode (New Focus 1611; 1-GHz bandwidth), and the signal is amplified with a rf amplifier (HP8447D; 0.1–1300 MHz) before being fed back to drive the DBR section of the laser diode. The 3-dB bandwidth of the commercially available optical filter is ~1 nm, and the center wavelength is continuously tunable from 1535 to 1565 nm. We employ a fiber line and an optical attenuator in the feedback loop to adjust the delay time and the feedback gain, respectively. The second part of the light output of the optical filter is detected with another photodiode (New Focus 1611; 125-MHz bandwidth) and monitored with a digital oscilloscope (LeCroy 9362; 750-MHz bandwidth).

Figure 2(a) shows the wavelength-tuning characteristic of the DBR laser obtained experimentally. This characteristic tuning contains 11 segments corresponding to the 11 modes within the 7.5-nm tuning range of the laser. The characteristic is adjustable by use of a phase-control current, i_p. When the DBR tuning current i_d is constant, the laser is always in a single-mode state, regardless of the pump level. Bifurcations from a stable state to periodic and chaotic oscillations are observed when the feedback gain, the offset DBR current, or the center wavelength of the optical filter is varied. The results in the remainder of this Letter were obtained for oscillations in the chaotic regime with DBR laser parameters at $i_d = 15$ mA, $i_p = 0$ mA, and $i_f = 30$ mA and with the center wavelength of the filter set to 1550 nm.

Figure 2(b) shows a typical example of the optical spectrum of the laser when the system output exhibits chaotic oscillations. The long-time optical spectrum contains seven wavelength peaks, which correspond to seven segments of the laser-tuning characteristic shown in Fig. 2(a). This multipeak spectrum is a key characteristic of the wavelength hopping in this system.

Figure 3 shows examples of time series of changes in the amplitudes of individual modes observed with a narrow-band optical filter (bandwidth, ~0.3 nm). The time series show that individual modes are on–off intensity modulated with a chaotic modulation pattern. Different modes have different intensity-modulation patterns, and at any one time most of the lasing energy is concentrated in just one of the seven modes. Note that this abrupt wavelength hopping occurs as a result of the mode hopping. This feature in particular is different from the behavior described in Ref. 5. Note also that the total light output of the laser measured at A in Fig. 1 shows a nearly constant level, independently of the fluctuations of the wavelength of the output.

The mechanism for this chaotic mode hopping can be understood from a relatively simple dynamic model describing the relaxation of a single slow variable, such as the tuning current of the DBR section. The current injected into the DBR section determines the refractive index and thus the effective reflectivity of the DBR. This in turn determines the lasing mode, its wavelength, and its amplitude.[8] Since the pump level is kept fixed, the carrier density in the active section of the laser can be regarded as constant. Furthermore, the relaxation of the optical field in the laser owing to changes in the refractive index in the DBR section is fast compared with the response of the electrical feedback driving the refractive-index changes, so we can assume that the lasing state adiabatically follows the change of the electrical feedback signal. Therefore we can describe the dynamics of the chaotic mode hopping in terms of the relaxation of a single slow variable such as tuning current with delayed electrical feedback.

The dynamics of the chaotic mode hopping can be mathematically modeled by use of a delay-differential equation for the relaxation of the tuning current with a single nonlinear feedback function representing the compounded effects of variation of laser output wavelength and amplitude with refractive index, the optical filter transmission characteristics, and the dependence of the electrical feedback signal on the optical intensity. In numerical simulations of such a delay-differential equation, we have reproduced chaotic mode hopping waveforms and bifurcation routes that show excellent agreement with experimental observations.

To perform synchronization of chaotic mode hopping we couple a part of the light from one laser, the master system, to the feedback loop of another laser, the slave system. Before coupling of the light, the

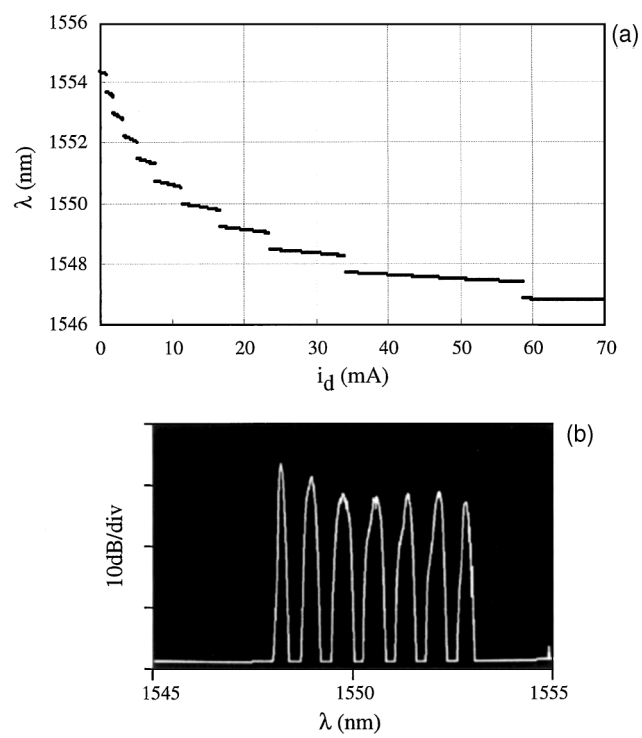

Fig. 2. (a) Wavelength-tuning characteristics of the DBR laser diode and (b) optical spectrum of the laser in the state of chaos.

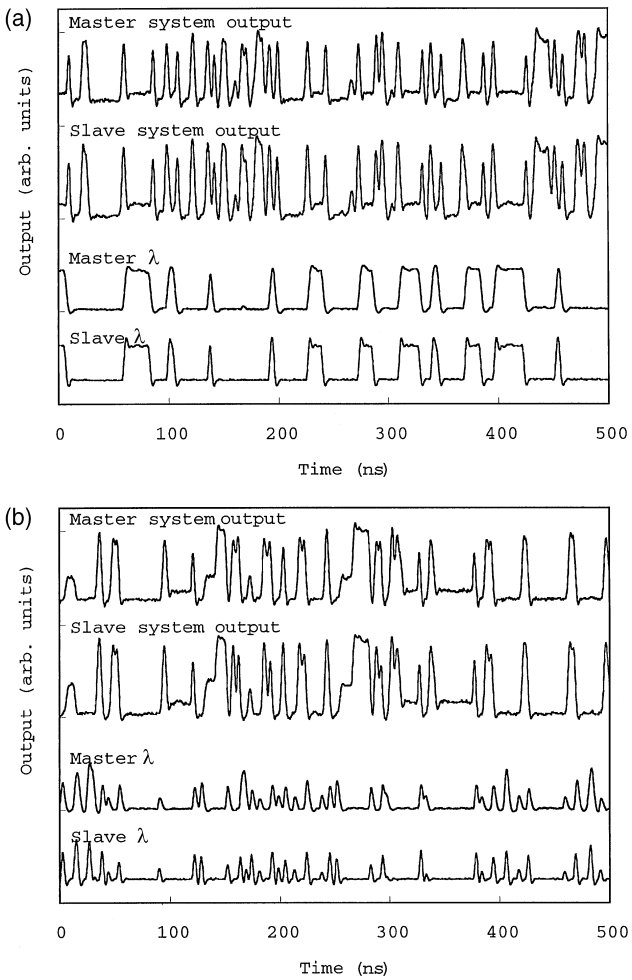

Fig. 3. Typical waveforms of the synchronized master and slave systems at $i_d = 15$ mA and $\lambda_c = 1550$ nm. All traces are on the same relative scale. (a) Waveforms of the system output and mode 1 ($\lambda = 1548.25$ nm). (b) Waveforms of the system output and mode 4 ($\lambda = 1550.51$ nm).

parameters of the slave system are adjusted so that the spectrum and the output waveform (amplitude, main frequency) of the slave system are similar to those of the master. This process includes adjustments of the laser parameters (i_f, i_d, i_p), the center wavelength of the filter, and the feedback gain. Then, when we are coupling the two systems, we tune the feedback gain of the slave system with a fiber attenuator so that the total feedback strength (feedback from the slave laser itself plus the transmitted signal from the master laser) is at the same level as before coupling. The coupling coefficient is denoted ϵ, as shown in Fig. 1. Thus $\epsilon = 0$ corresponds to the noncoupled state, and $\epsilon = 1$ means that the whole feedback signal of the slave system is replaced by the signal transmitted from the master system. The output of the slave system is taken right after the wavelength filter and compared with the output of the master system.

Figure 3 shows two typical waveforms of both the master and the slave system's output in the synchronized state. The parameters for the master system are the same as for Fig. 2(b). In both Fig. 3(a) and Fig. 3(b), the top two waveforms correspond to the light output of the master and the slave systems, and the two bottom waveforms show the signals of one particular wavelength of the master and the slave lasers. Specifically, the bottom waveforms in Fig. 3(a) show the time series of the wavelength $\lambda = 1548.25$ nm, which corresponds to the first peak in Fig. 2(b), and those in Fig. 3(b) show the time series $\lambda = 1550.51$ nm, the fourth peak in Fig. 2(b). In both cases we recognized the excellent coincidence between the master and the slave outputs. The output for other modes was also checked, and synchronization between the corresponding modes was observed. Synchronization was found to be possible for coupling strength greater than $\epsilon = 0.7$. The influence of the parameter mismatch between the master and the slave systems (DBR current, center wavelength of the filter, feedback gain) on the correlation feature between the output from the two systems was investigated, and the results showed that the synchronization could be recognized for as much as 5% of the relative parameter mismatch. For the optimal match that is achievable experimentally, the stable synchronization can last as long as several tens of hours.

In conclusion, we have shown that synchronized chaotic mode hopping can be generated in a delayed-feedback system that consists of a DBR laser diode and a wavelength filter. Chaotic mode hopping among as many as seven longitudinal laser modes has been observed. Each mode exhibits a different intensity oscillation pattern, and the total laser output itself shows a nearly constant intensity level. We achieved synchronization of mode hopping between the master and the slave lasers by coupling part of the light output from the master system to the slave system. Synchronization was observed between the on–off intensity modulation patterns of each pair of corresponding longitudinal laser modes.

We are grateful to B. Komiyama and T. Aida for continual encouragement and K. Inagaki for experimental help. The authors' e-mail addresses are, in order, y-liu@acr.atr.co.jp and davis@acr.atr.co.jp.

References

1. H. Fujisaka and T. Yamada, Prog. Theor. Phys. **69,** 32 (1983).
2. L. M. Pecora and T. L. Carroll, Phys. Rev. Lett. **64,** 821 (1990).
3. K. M. Cuomo and A. V. Oppenheim, Phys. Rev. Lett. **71,** 65 (1993).
4. G. D. Van Wiggeren and R. Roy, Science **279,** 1198 (1998).
5. J. P. Goedgebuer, L. Larger, and H. Porte, Phys. Rev. Lett. **80,** 2249 (1998).
6. S. Sivaprakasam and K. A. Shore, Opt. Lett. **24,** 466 (1999).
7. K. Ikeda and K. Matsumoto, Physica D **29,** 23 (1987).
8. A. Tsigopoulos, T. Sphicopoulos, I. Organos, and S. Pantelis, IEEE J. Quantum Electron. **28,** 415 (1992).