MARTIN MARIETTA ENERGY SYSTEMS LIBRARIES
3 4456 0387466 2

ornl

ORNL/TM-12441

OAK RIDGE NATIONAL LABORATORY

MARTIN MARIETTA

Proposed Atomic Energy of Canada Ltd. ^{99}Mo Waste Calcination Process

D. W. Ramey
J. F. Birdwell
K. A. Coltharp
P. A. Haas
R. T. Jubin
D. W. Malkemus
C. P. McGinnis
E. S. Meyers
B. D. Patton

OAK RIDGE NATIONAL LABORATORY
CENTRAL RESEARCH LIBRARY
CIRCULATION SECTION
4500N ROOM 175
LIBRARY LOAN COPY
DO NOT TRANSFER TO ANOTHER PERSON
If you wish someone else to see this report, send in name with report and the library will arrange a loan.
UCN-7969 (3 9-77)

MANAGED BY
MARTIN MARIETTA ENERGY SYSTEMS, INC.
FOR THE UNITED STATES
DEPARTMENT OF ENERGY

This report has been reproduced directly from the best available copy.

Available to DOE and DOE contractors from the Office of Scientific and Technical Information, P.O. Box 62, Oak Ridge, TN 37831; prices available from (615) 576-8401, FTS 626-8401.

Available to the public from the National Technical Information Service, U.S. Department of Commerce, 5285 Port Royal Rd., Springfield, VA 22161.

This report was prepared as an account of work sponsored by an agency of the United States Government. Neither the United States Government nor any agency thereof, nor any of their employees, makes any warranty, express or implied, or assumes any legal liability or responsibility for the accuracy, completeness, or usefulness of any information, apparatus, product, or process disclosed, or represents that its use would not infringe privately owned rights. Reference herein to any specific commercial product, process, or service by trade name, trademark, manufacturer, or otherwise, does not necessarily constitute or imply its endorsement, recommendation, or favoring by the United States Government or any agency thereof. The views and opinions of authors expressed herein do not necessarily state or reflect those of the United States Government or any agency thereof.

ORNL/TM-12441

510

Chemical Technology Division

PROPOSED ATOMIC ENERGY OF CANADA Ltd. ^{99}Mo WASTE CALCINATION PROCESS

D. W. Ramey
J. F. Birdwell*
K. A. Coltharp†
P. A. Haas
R. T. Jubin*
D. W. Malkemus
C. P. McGinnis
E. S. Meyers
B. D. Patton

* Robotics and Process Systems Division, ORNL
† Summer intern, Chemical Technology Division

Date Published: October 1994

Prepared by
OAK RIDGE NATIONAL LABORATORY
Oak Ridge, Tennessee 37831-6285
managed by
MARTIN MARIETTA ENERGY SYSTEMS, INC.
for the
U.S. DEPARTMENT OF ENERGY
under contract DE-AC05-84OR21400

MARTIN MARIETTA ENERGY SYSTEMS LIBRARIES

3 4456 0387466 2

CONTENTS

LIST OF FIGURES v

LIST OF TABLES vii

EXECUTIVE SUMMARY ix

1. INTRODUCTION 1

1.1 DESCRIPTION OF THE TASK AND PROJECT GOALS 1
1.2 CRITERIA FOR PROCESS SELECTION 2

2. PROCESS FLOWSHEET 3

3. EQUIPMENT FLOWSHEET 5
3.1 FEED CONCENTRATION 7
3.2 MERCURY EXTRACTION SYSTEM, MERCURY POOL ELECTRODE 7
3.3 CALCINER 7
3.4 RUTHENIUM TRAPS 8
3.5 SCRUBBER 8
3.6 IODINE ADSORBER 9
3.7 HEPA FILTRATION 9
3.8 MATERIAL BALANCE 9
3.9 OPERATIONAL SEQUENCING 11

4. LIQUID DECAY TANK REQUIREMENTS 11

5. GAS DELAY PIT REQUIREMENTS 15

6. CELL SPACE REQUIREMENTS 15

7. MERCURY REMOVAL METHOD 15

8. OFF-GAS COMPOSITION AND TREATMENT 20

9. WASTE FORM CAN LOADING AND PROPERTIES 22

9.1 EXPERIMENTAL STUDIES 22
9.1.1 Apparatus 23
9.1.2 Procedures 23
9.1.3 Calcine Density Results 23
9.1.4 Calcine and Condensate Compositions 32
9.1.5 Feed Rate Versus Canister Diameter 35
9.1.6 Other Experimental Measurements 36

9.2 CALCULATED HEAT LOADINGS AND ALLOWABLE DENSITIES 37

9.3 CALCULATED EFFECTS OF RADIOLYTIC DECOMPOSITION 37

9.4 WASTE RETRIEVAL PROCESS 39

10. PROCESS OPTIMIZATION 39

10.1 CALCINATION PROCESS 40
10.2 OFF-GAS PROCESSES 40
10.3 WASTE CAN PROCESS 41

11. SECONDARY WASTE STREAMS INFORMATION 41

12. COST ESTIMATION INFORMATION 42

12.1 PROJECT INTEGRATION 42
12.1.1 Process Optimization 42
12.1.2 Design 42
12.1.3 Construction 43
12.1.4 Preoperational Testing 43

12.2 SCHEDULE AND COST ESTIMATE 43

12.3 DESIGN AND CONSTRUCTION BASIS FOR ESTIMATE 43

13. SAFE OPERATIONS 46

14. OPERABILITY, RELIABILITY, AND MAINTENANCE 46

14.1 OPERABILITY 46
14.2 RELIABILITY 48
14.3 MAINTENANCE 49
14.4 POT CALCINATION ADVANTAGES RELATIVE TO OTHER CALCINATION METHODS 49

15. CONCLUSIONS 49

REFERENCES 51

LIST OF FIGURES

1. Proposed ^{99}Mo waste calcination conceptual flowsheet 4

2. Proposed AECL ^{99}Mo waste calcination process detailed flowsheet with stream numbers 6

3. Proposed AECL ^{99}Mo waste calcination process sequencing chart 14

4. Equipment layout in Cells 1 and 2, plan view 16

5. Equipment layout in Cells 1 and 2, front view 17

6. Equipment layout in Cell 2, side view facing east 18

7. Equipment layout in Cell 1, side view facing west 19

8. Schematic of the mercury pool electrode 21

9. Schematic of the AECL ^{99}Mo waste calciner experimental apparatus 24

10. Experimental setup of the AECL calciner 25

11. Proposed AECL ^{99}Mo waste calcination process schedule of activities 44

LIST OF TABLES

1. Chemical composition of ^{99}Mo waste 1

2. Process decontamination factor goals 3

3. Approximate concentration levels of major chemical constituents in the feed after evaporation 7

4. Estimated volatility factors for the evaporator overheads 7

5. Estimated volatilization factors from the calciner into the off-gas stream 8

6. Estimated decontamination factors for the wet scrubber system 9

7. Material balance estimates 10

8. AECL off-gas treatment system material balance 12

9. Off-gas treatment system effluent stream compositions 22

10. Test conditions and results for ^{99}Mo waste calcination, Test 1-21 27

11. Densities and variables for ^{99}Mo waste calcination 33

12. Chemical analysis of products: ^{99}Mo waste tests 34

13. Condensate analysis for metals 35

14. Mercury distribution in Test 9 35

15. Results of densification by mild crushing or grinding 36

16. Recalcination results 37

17. Air exposure conditions and weight gains 38

18. Calcine weight gains versus air exposure times 38

19. ORNL project cost estimates 45

20. Detailed cost estimates for design and construction 47

EXECUTIVE SUMMARY

Atomic Energy of Canada Limited (AECL), at its Chalk River Laboratory, generates from 3000 to 5000 L/year of high-level fissile waste solution from the production of ^{99}Mo. In this ^{99}Mo process, highly enriched uranium (93 wt % ^{235}U, total uranium basis) contained in uranium-aluminum alloy target rods is irradiated to produce the ^{99}Mo product. The targets are removed from the reactor and dissolved in a mercury nitrate-catalyzed reaction with nitric acid. The ^{99}Mo product is then recovered by passing the solution through an alumina (Al_2O_3) column. The effluent waste from this column is concentrated by evaporation and then stored as aqueous waste.

AECL is developing and actively pursuing a comprehensive waste management strategy which will include the treatment of this ^{99}Mo waste to produce a solid waste as the storage form. During discussions with personnel from the Oak Ridge National Laboratory (ORNL) on September 10, 1992, the ORNL-developed technology formerly applied to the solidification of aqueous uranium waste (Consolidated Edison Uranium Solidification Program or CEUSP) was judged potentially applicable to the AECL ^{99}Mo waste. Under a Work-for-Others contract (no. ERD-92-1132), which began May 24, 1993, ORNL was tasked to determine the feasibility of applying the CEUSP (or a similar) calcination process to solidify AECL's ^{99}Mo waste for >30 years of safe dry storage. This study was to provide sufficient detailed information on the applicability of a CEUSP-type waste solidification process to allow AECL to select the process which best suited its needs. As with the CEUSP process, evaporation of the waste and a simultaneously partial destruction of acid by reaction with formaldehyde followed by in situ waste can thermal denitration waste was chosen as the best means of solidification. Unlike the CEUSP material, the ^{99}Mo waste has a considerable number of problem volatile and semivolatile constituents which must be recovered in the off-gas treatment system. Mercury removal before calcination was seen as the best option.

A preliminary cost estimate has been prepared for the design and construction of a process to solidify the aluminum-based waste. The process will solidify 140 L of aqueous waste per week, resulting in the generation of 5 waste cans, each with a 4-L volume. The 140 L of waste can be processed in as little as 3.5 days assuming a 24-h workday. The proposed solidification system produces a welded can of dry solid waste with a volume reduction ratio of 7, which includes a 20% freeboard void volume in each waste can. The process utilizes a simple pot calcination method to produce an aluminum oxide (Al_2O_3) waste form with a bulk density of approximately 0.5 g/cm^3 and with residual water and nitrates totaling <1 wt %. Aqueous waste, concentrated by a factor of 2, is fed into parallel calcination furnaces at an average rate of 12 mL/min each. Calcination temperatures will range from 600 to 700 °C.

A simple off-gas system has been designed to handle the fission products and other volatile components evolving from the calcination process. In this design, secondary waste streams produced during each processing run have been limited to water and nitric acid, excess elemental mercury, and NO/NO_2. Other secondary waste streams (solid waste) produced on a periodic basis are ruthenium-loaded ferric oxide traps (annually), spent zeolite from iodine recovery (annually), and high-efficiency particulate air filters (as needed). The release of mercury to the low-level waste (LLW) system is approximately 3 orders of magnitude lower than the maximum allowable 5×10^{-4} g/L (0.5 ppm). The total β-γ activity is approximately 5 orders of magnitude below the maximum allowable 3×10^{-3} Ci/L.

The proposed process is configured from well-established technology with the only exception being a mercury removal process. However, the electrolytic process proposed for mercury removal is viewed as a simple means of eliminating a problem waste with no secondary waste stream to treat. The mercury removal process is based on a simple electrochemical principle, is a simple design, and is easy to control and operate. No additives are required, and the equipment is compact and relatively inexpensive. All the required components are designed to be operated without difficulty in a hot cell environment, require minimal and inexpensive maintenance, and are of a size that will fit into the existing hot cells (Building 234) at AECL. The processes are believed to be uncomplicated, easy to control, simple to operate, and inherently safe. Little if any entrainment of material in the off-gas system is expected, and all operations are relatively dust free and not prone to leaks or spills. All secondary waste streams have met the goal of being easily manageable with little or no further processing required. The recycle of a process resource (mercury) has been achieved in an uncomplicated manner. Emission limits to AECL's LLW system are easily met. Air emissions will also be of little concern with the mercury release being quite low.

A cost estimate for specific project elements in this report including equipment design and construction, equipment cold testing and process optimization, fabrication, and preoperational checkout at AECL was made. Elements not included in this estimate were cost of equipment installation and required hot cell modifications at AECL, cost of AECL operating crew during preoperational checkout, and cost of installation of the required decay tanks. The estimated total cost was approximately $7.7 million. This is a rough conceptual cost, which is conservative based upon current assumptions. Final cost estimates will be done during the next phase of this work. ORNL will work closely with AECL to develop the revised cost estimate when authority to proceed is obtained from AECL.

1. INTRODUCTION

1.1 DESCRIPTION OF THE TASK AND PROJECT GOALS

Atomic Energy of Canada Limited (AECL), at its Chalk River Laboratory, generates from 3000 to 5000 L/year of high-level fissile waste solution from the production of ^{99}Mo. This nitric acid–based waste is currently stored in underground tanks. In the ^{99}Mo process, highly enriched uranium (93 wt % ^{235}U, total uranium basis) contained in uranium-aluminum alloy target rods is irradiated for 10.5 days in a 10^{14}-n/(cm^2·s) neutron flux. The targets are removed from the reactor and dissolved in nitric acid after a 16- to 20-h cooldown. Mercury nitrate is used to catalyze the dissolution reaction. The ^{99}Mo product is removed by passing the solution through an alumina (Al_2O_3) column. The effluent waste from this column is concentrated by evaporation and then stored as aqueous waste. The composition of the ^{99}Mo nitric acid waste solution is given in Table 1.

Table 1. Chemical composition of ^{99}Mo waste

$Al(NO_3)_3$	1.070 mol/L
HNO_3	0.830 mol/L
^{235}U	0.021 mol/L (5 g/L)
Uranium (other)	0.002 mol/L average (0.5 g/L)
Hg $(NO_3)_3$	0.038 mol/L
H_2O	46.600 mol/L
Fission products	0.500 g/L

AECL is developing and actively pursuing a comprehensive waste management strategy which will include the treatment of this ^{99}Mo waste to produce a solid waste as the storage form. This solidification process must use proven technology either to produce a product that is suitable for interim storage (>30 years) with potential retrievability and reprocessing into an ultimate disposal form or to produce a product which is itself suitable for ultimate disposal. During discussions with personnel from the Oak Ridge National Laboratory (ORNL) on September 10, 1992, the ORNL-developed technology formerly applied to the solidification of aqueous uranium waste (Consolidated Edison Uranium Solidification Program or CEUSP) was judged potentially applicable to the AECL ^{99}Mo waste.[1] This waste process was viewed as a simple waste calcination technique that offered many advantages.

Under a Work-for-Others contract (no. ERD-92-1132), which began May 24, 1993, ORNL was tasked to determine the feasibility of applying the CEUSP (or a similar) calcination process to solidify AECL's ^{99}Mo waste for >30 years of safe dry storage. This study was to provide sufficient detailed information on the applicability of a CEUSP-type waste solidification process to allow AECL to select the process which best suited its needs. Other waste processes under consideration by AECL are rotary calcination and cementation.

ORNL was to determine the feasibility of installing the proposed process in an existing hot cell complex at AECL. ORNL was also to evaluate the suitability of these existing hot cells and an associated facility in light of the proposed process. Depending on the process selected, ORNL was to determine if decay tanks were required to store the aqueous waste for a period to allow decay of the waste before processing and if gas delay pits were required as a part of the process off-gas treatment.

1.2 CRITERIA FOR PROCESS SELECTION

The following is a list of criteria derived from a combination of discussions with AECL, past design experiences, and similar equipment operations at ORNL. These criteria were determined by the design team to be important as a basis for a sound process design.

- The process should treat from 3000 to 5000 L/year of high-level fissile waste in a nitric acid-based solution from the production of ^{99}Mo.
- Addressing the mercury nitrate used to catalyze the ^{99}Mo target dissolution reaction was of primary importance.
- The process must provide a solid material as the storage form.
- The solidified product must be either suitable for interim storage (> 30 years) with potential retrievability and reprocessing into an ultimate disposal form or suitable for ultimate disposal.
- The solidification process must use proven technology requiring little if any research or long-term development work.
- The process should be uncomplicated, simple to operate, and inherently safe.
- The secondary waste streams should be minimized to the degree possible.
- Any compounds which could be reused in the target dissolution process should be recycled.
- Secondary waste streams which cannot be recycled should be easily manageable with little or no further processing required.
- Processes selected must be suitable for remote operations, require minimal maintenance, and be compatible with existing hot cells.
- Processes should avoid steps which could result in hot cell gross contamination (e.g., dust producing or leak prone).
- The process must be economically feasible within the framework of AECL's isotope production budget constraints.
- The off-gas treatment system must be designed to remove Ru, Cs, Sr, NO_x, I, and trace levels of mercury.
- The off-gas system must control the accumulation of ruthenium to a specific selected location.
- Off-gas emission limits were assumed to be consistent with U.S. requirements. No site-specific modeling was to be done in the preliminary estimate.
- The maximum limit of mercury in any aqueous stream discharged to the low-level waste (LLW) system was to be 0.5 ppm (5×10^{-4} g/L).

- The maximum limit of β-γ activity discharged to the LLW system was to be 3×10^{-3} Ci/L.
- Off-gas decontamination factor goals were as listed in Table 2.
- Dual high-efficiency particulate air (HEPA) filtration of all off-gas streams would be required.
- Equipment should be skid mounted, if possible.

Table 2. Process decontamination factor goals

Component[a]	Decontamination factor
Iodine	10^3
Mercury	10^4
Ruthenium	10^3
Cesium	10^2
Strontium	10^2
Cerium	10^2
Tellurium	10^2
NO	1
NO_2	2

[a]The values for the radionuclides, mercury, NO, and NO_2 listed are based on published literature and are referenced in the discussion in Sect. 2.

2. PROCESS FLOWSHEET

The concept of the CEUSP process involved evaporation of the waste while simultaneously performing a partial destruction of acid followed by thermal denitration of the concentrated aqueous waste to form a porous solid uranium oxide in situ in the waste storage can. The off-gas treatment for the CEUSP process merely focused on preventing unacceptable releases of NO_x and radon. However, AECL's ^{99}Mo waste has a considerable problem with volatile and semivolatile constituents (fission products and mercury), which must be addressed. The conceptual process proposed to treat AECL's ^{99}Mo waste is illustrated in Fig. 1.

The feed withdrawn from the waste storage tanks should be concentrated by evaporation. This feed conditioning step should proceed only to a point where the concentrated waste does not exceed a level where there is a danger of components precipitating from the liquid phase. This action removes bulk water that would otherwise have to be handled as off-gas from the calciner. The water removed by evaporation (and nitric acid destruction) will be orders of magnitude cleaner than water evolving from the calcination step with respect to radionuclides. Concentrating the feed by evaporation also allows for a partial destruction of nitric acid, with the addition of formaldehyde, which reportedly will aid in reducing the volatility of ruthenium during calcination.[2]

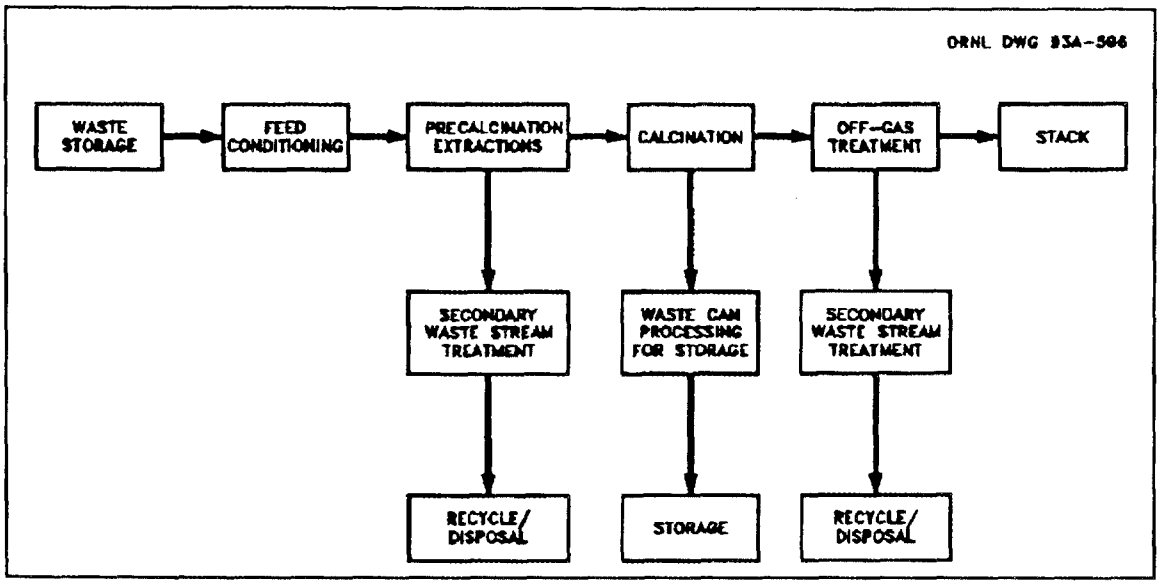

Fig. 1. Proposed ^{99}Mo waste calcination conceptual flowsheet.

Removal of mercury from the waste process both before and after calcination was considered. Location of a mercury recovery process prior to calcination was deemed desirable based on greater potential for mercury recycle and avoidance of secondary waste stream generation. Based on the waste characterization that was supplied to ORNL, failure to recover and recycle mercury from the ^{99}Mo process waste would result in the disposal of approximately 1 kg of mercury per 140 L of waste treated (i.e., 1 kg per week).

Postcalcination off-gas treatment methods for removal of mercury (ion-exchange process) generally result in the generation of a secondary waste stream. This waste form will generally be a hydrochloric acid solution from HCl scrubbing of the off-gas (to recovery mercury as $HgCl_2$).[3] As an alternative, mercury can be recovered after calcination in an oxide form, which must be dissolved and nitrated if it is to be recycled to the dissolution process. Processing of the mercury as a solid separate from the calcined waste has the added disadvantage of requiring in-cell solids-handling equipment in addition to that required for packaging of the calcine.

Both the chemical extraction and the electrolytic recovery processes were considered for use upstream of the calciner. Electrolytic processing was selected based on its simplicity, apparent reliability, minimal parts, separation efficiency ($\sim$99%)[3], and apparent selectivity. The apparent selectivity of the process for mercury is considered a very attractive advantage.

Calcination of the concentrated aqueous follows the mercury-removal step. In the operation of the CEUSP calciner, the concentrated feed waste was metered into a heated waste can surrounded by a three-zone calcination furnace. Starting temperatures for the three zones were 400°C (bottom), 300°C, and 100°C with each zone being ramped to between 700 and 800°C during the course of metering in the feed at 9 mL/min. Experimental work was undertaken to determine a reasonable rough cut of the performance criteria for the calcination process. A literature search indicated that a

higher initial furnace temperature (i.e., >500°C) may significantly reduce the ruthenium volatility during calcination.[4] However, as a conservative design factor for the ruthenium traps, all the ruthenium was assumed to volatize during calcination.

The off-gas treatment system must be designed to remove Ru, Cs, Sr, NO_x, I, and trace levels of mercury. The primary criterion for selection of a ruthenium treatment process was minimization of ruthenium retention in the off-gas treatment system. The propensity for ruthenium to plate out in the off-gas systems of reprocessing facilities has been well documented.[5,6] Mechanisms of ruthenium deposition include physical adsorption of gaseous ruthenium species accompanied by chemical reaction to form insoluble ruthenium compounds. Adsorption of ruthenium on ferric oxide beds was selected for application to this ^{99}Mo waste calcination off-gas stream. This selection was based on demonstrated satisfactory performance of this process at elevated temperatures (>500°C) as compared with other removal processes (e.g., silica gel with 80°C maximum temperature).[7] The selection of ferric oxide will permit location of the ruthenium trapping immediately downstream of the calciner. Supplemental electric heating of the calciner off-gas prior to ruthenium trapping will be used at startup and during steady-state operation (as needed) to minimize ruthenium condensation in undesirable locations.

Processes considered for NO_x removal were wet scrubbing and selective catalytic reduction using ammonia. The removal efficiencies of both processes suffer because of the application-specific factors. Catalytic destruction of NO_x has proved to be difficult to perform effectively when the concentrations of the constituent compounds vary.[8] A significant expenditure for instrumentation in order to respond to concentration changes such that the ammonia addition rate is adequately controlled is probable. The efficiency of NO_x removal by wet scrubbing is limited by the heights of the AECL cells in which the equipment is to be located. Fortunately, material balance calculations indicate that even without an NO_x abatement, processing NO_x emission from the ^{99}Mo waste process will not exceed allowable limits, based on total off-gas flow and dispersion values provided by AECL. Though NO_x treatment is not required to meet NO_x emission standards, a wet scrubbing process has been included in the off-gas treatment flowsheet. This system, while providing modest NO_x removal capability, has the desirable advantages of removing entrained Cs, Hg, Ce, and Sr from the off-gas and reheating the off-gas stream prior to the iodine removal and HEPA filtration steps. Trapping of ^{129}I will be accomplished by adsorption onto a Norton zeolite 900 bed (silver mordenite) which contains 18-20% silver. The off-gas passes from the iodine adsorber through two HEPA filters in series before exiting the hot cell.

3. EQUIPMENT FLOWSHEET

The detailed flowsheet for the proposed ^{99}Mo waste calcination process is illustrated in Fig. 2. The stream numbers indicated in Fig. 2 are labeled for the purpose of material balance discussions to be presented in a later section of this report. Feed from the decay tank is transferred into a feed evaporator. An evaporator of the thermal-syphon type used for the CEUSP process was chosen for the design basis for this report. Formaldehyde will be added in the evaporation step to partially destroy free nitric acid. The feed will be evaporated to the approximate levels of concentration listed in Table 3 and will result in an approximate 50% reduction in volume.

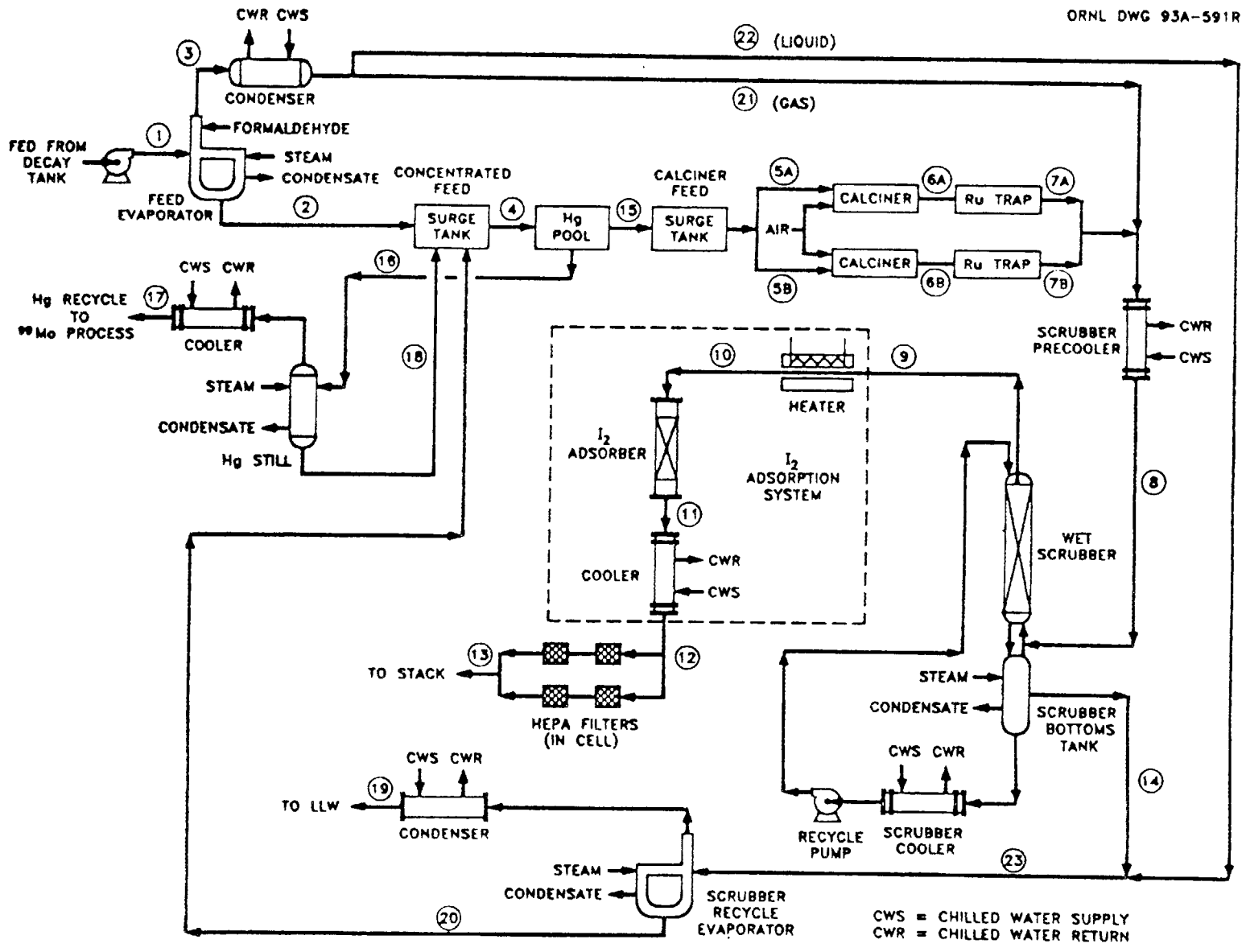

Fig. 2. Proposed AECL ^{99}Mo waste calcination process detailed flowsheet with stream numbers.

Table 3. Approximate concentration levels of major chemical constituents in the feed after evaporation
(All units are moles per liter)

$Al(NO_3)_3$	2.000
HNO_3	0.150
$Hg(NO_3)_2$	0.071
$UO_2(NO_3)_2$	0.046
H_2O	42.100

The following is a discussion of the design considerations of specific components of the flowsheet.

3.1 FEED CONCENTRATION

Standard evaporation technology is utilized to concentrate the feed to the calciner. The feed will be concentrated by a factor of approximately 2. Overheads will be primarily water and nitric acid with some NO_x, CO, and CO_2 from the destruction of nitrates with the formaldehyde addition. The overheads will be sent to the scrubber recycle evaporator and the NO_x sent to the wet scrubber. Table 4 lists the estimated volatility factors for the vapor evolving from the evaporator.

Table 4. Estimated volatility factors for the evaporator overheads

Component	Volatility factor[a]
Iodine	0.00
Mercury	10^{-4}
Ruthenium	10^{-6}
Cesium	10^{-6}
Strontium	10^{-6}
Cerium	10^{-6}
Tellurium	10^{-6}
NO	10^{-6}
NO_2	Equilibrium concentration with nitric acid[b]
CO	1
CO_2	1

[a]These same volatility factors apply for the scrubber recycle evaporator for the appropriate constituents.
[b]Additional NO_2 is evolved from formaldehyde destruction of HNO_3.

3.2 MERCURY EXTRACTION SYSTEM, MERCURY POOL ELECTRODE

The operational characteristics of this electrolytic mercury extraction process are described in Sect. 7 of this report. The decontamination factor (DF) for this process is estimated to be 100.

3.3 CALCINER

Table 5 lists the estimated design factors for the off-gas stream evolving from the calciner.

Table 5. Estimated volatilization factors from the calciner into the off-gas stream

Component	Volatilization factor
Water	1.00
Iodine	1.00
Mercury	0.50[a]
Ruthenium	1.00
Cesium	0.01
Strontium	0.01
Cerium	0.01
Tellurium	0.00004
NO	0.02 of nitrate in calciner feed evolved as NO
NO_2	0.98 of nitrate in calciner feed evolved as NO_2

[a]Based on experimental results from this work.

3.4 RUTHENIUM TRAPS

The ruthenium traps are designed to recover ruthenium on a bed of ferric oxide. The DF is assumed to be 1000 for two beds in series. This is a conservative assumption because reported DFs for single traps are in the range of 100 to 1000.[9] The loading capacity of the ferric oxide is >5 g of ruthenium per liter of ferric oxide. The beds are to be operated nominally at 500°C. The bed will require electric resistance heating to achieve startup temperature, but once the calciners are in full operation, the bed temperature may possibly be maintained by a combination of decay heat and the hot gas stream coming off the calciner.

Oxidation of 50% of the NO in the off-gas stream to NO_2 is anticipated at this temperature and with the oxygen concentration present in the ruthenium traps.

3.5 SCRUBBER

The scrubber uses water to scrub the off-gas stream; the process serves two primary purposes. First, it removes the bulk of the water from the off-gas stream and recovers NO_x as nitric acid. Second, it recovers portions of the Hg, Cs, Ce, and Sr, as well as some particulate matter. The scrubber is operated cold (approximately 10°C) to achieve a reasonable NO_2 recovery. The effluent streams from the calciner are cooled to 30°C by the action of the wet scrubber precooler. Operational experience at the Integrated Equipment Test Facility (IETF) at ORNL with equipment of similar size that is operated under similar conditions has shown the condensation/wet-wall action of the precooler will remove approximately 50% of the NO_2 as nitric acid.[10] In addition to the precooler action, the wet scrubber is designed to reduce the NO_2 content in the off-gas stream by an additional 50%, resulting again in a nitric acid product. The recovery of NO is assumed to be small due to the short residence time in the precooler and the wet scrubber. In fact, NO is generated in the scrubber during the scrubbing of the NO_2 (i.e., a DF of 0.5). The NO_2 recovery itself is restricted because of the limited hot cell height, which in turn limits the number of effective stages that can be achieved in the scrubber. During the scrubbing process, a fraction of the iodine in the gas stream is recovered in the scrubber liquor. The scrubber bottoms tank is heated to revolatilize the iodine, and the solution from the bottoms tank is circulated to the top of the scrubber column, where the iodine is stripped by the

gas stream evolving from the scrubber. However, there will be an equilibrium fraction of iodine that remains in the scrub solution. The scrubber solution containing the recovered water and nitric acid is sent to be processed for recycling. In order to achieve a "clean" acid stream for recycle, this stream is processed through an evaporator (scrubber recycle evaporator). The bottoms from this evaporator, which will contain small amounts of Hg, Cs, I, Ce, etc., are recycled for mercury removal and recalcination, while the condensate from this evaporator is dumped to the LLW system. Table 6 lists the estimated DFs for the wet scrubber system.

Table 6. Estimated decontamination factors for the wet scrubber system

Component	Decontamination factor
NO	0.5
NO_2 (including the precooler)	4.0
Mercury	100.0
Cesium	100.0
Cerium	100.0
Strontium	100.0
Ruthenium	10.0

3.6 IODINE ADSORBER

The iodine removal unit will utilize a solid sorbent bed of silver-exchanged mordenite (AgZ). This bed is sized to provide an iodine DF of 1000. The gas stream is preheated to 150–250°C, and the bed itself should be operated between 150 and 225°C. Loading capacity of the AgZ is estimated in this design to be 100 mg of iodine per gram of AgZ. While the AgZ has been experimentally regenerated using a high-temperature hydrogen process, regeneration is not recommended since the AgI formed in the AgZ zeolite matrix is a more stable waste form than the resulting PbI in a lead-exchanged zeolite used to trap the HI produced in the regeneration process. Following the AgZ beds, the gas stream is cooled to below 50°C prior to passing through the HEPA filters and being discharged to the facility stack. No credit is taken for removal of other elements in the iodine adsorbers. However, some deposits of ruthenium and the oxidation of NO can be expected.

3.7 HEPA FILTRATION

During HEPA filtration, a DF of 10 is assumed for each stage of filtration for Cs, Ce, and Sr. The HEPA filters will also recover >99.94% of any dust arising from the AgZ beds. This dusting is not accounted for in the material balance flowsheet and is estimated to be extremely small.

3.8 MATERIAL BALANCE

The flowsheet material balance is based on processing a 40-L batch of unconcentrated feed that has been decayed for 90 days. The other estimates for the flowsheet are listed in Table 7 and have the following basis. The 98% conversion of NO to NO_2 in the calciner is based on the high oxidation potential of NO at the temperature of the calcination process. Nearly complete conversion of any NO present in the off-gas to NO_2 is likely to occur. The 50% conversion of NO to NO_2 in the ruthenium traps is again an estimate based on the high temperature of the gas and the residence time in the traps. The 50% NO_2 removal efficiency in the precooler is based on experience in the IETF at ORNL.

Removal efficiencies of this magnitude have been observed when cooling the off-gas from a uranium dissolution process. The processing temperatures for the IETF and AECL off-gas streams are similar. The NO_2 concentration in the AECL stream is higher than that in the IETF flowsheet, potentially resulting in higher NO_2 removal efficiencies for the AECL process (due to a more favorable reaction equilibrium).

Table 7. Material balance estimates

Nitrate from calcination process	98% NO_2
Conversion of NO to NO_2 in ruthenium trap	50%
NO_2 removal efficiency	
Precooler	50%
Scrubber	50%
NO removal efficiency	
Precooler	0%
Scrubber	5%
Cesium volatility during calcination (approx.)	1%
Cerium volatility during calcination (approx.)	1%
Strontium (nonvolatile during calcination)	
Tellurium volatility during calcination (approx.)	0.004%
Cesium decontamination factors	
Ruthenium trap	10
Scrubber	100
HEPA filters	100
NO_2 removal overall	75%
Calciner air purge (per calciner)	0.07 scfm (2 L/min)
Calciner processing rate	14.4 L per 20 h
Mercury recovery in mercury pool	99%
Fraction of scrubber product liquid effluent to LLW	
I_2	0.95
H_2O	0.95
HNO_3	0.95

The estimated NO_2 removal in the scrubber is an extrapolation from experience in the IETF, based on the anticipated column height in the AECL process. As is the case with the precooler, NO_2 concentrations are expected to be higher for the AECL process, which will promote more efficient removal than has been obtained in IETF. Removal efficiencies for NO are, likewise, estimates based on operating experience in the IETF.

The cesium volatilization value was taken from a 1982 International Atomic Energy Agency report.[6] This 1% value is reported for calcination of waste, whereas a volatilization factor of approximately 10% is reported for vitrification processes. The volatilization factor for tellurium is cited in the same reference. The cerium volatilization value is based on data from the waste solidification engineering prototype off-gas treatment system at the Battelle Pacific Northwest Laboratory.[11] The actual volatilization from this process is 0.004%. A volatilization value of 0% for strontium is based on the published vaporization temperature of anticipated strontium compounds.

Cesium DFs for scrubbing and HEPA filtration of 690 and 280, respectively, were reported from tests in the Waste Calcining Facility (WCF) at the Idaho Chemical Processing Plant.[12] Note that these values were for waste which was calcined in a fluidized bed where a much larger entrainment problem and much finer particles are present. The DF for cesium across the ruthenium trap is an estimate based on cesium removal values for silica gel beds at the WCF. The DFs for cerium were estimated to be the same as for cesium.

Table 8 is a material balance of all the streams shown in the detailed equipment flowsheet. The stream numbers listed in Table 8 are shown in Fig. 2.

3.9 OPERATIONAL SEQUENCING

The proposed ^{99}Mo waste treatment system will be a series of batch operations. Since each operation has a throughput unique to the process taking place, a sequencing schedule of each batch process was developed as a method of illustrating how individual components would interact with each other to produce an overall waste processing rate. The sequencing chart illustrated in Fig. 3 is a representation of the time sequencing required to process 140 L of waste per week. The mercury pool electrode equipment is assumed to process 20 L of waste in 9 h. The volumes listed are actual accumulative volume levels of aqueous waste fed into each specific piece of process equipment. The effects of each specific process on the volume (volume reduction by evaporation, etc.) are accounted for on the chart. Time lags for sampling, equipment setup, and can welding are included. The total run time to process 140 L is approximately 82 h (~3.5 days assuming a 24-h workday). The sequencing chart assumes a concentrated feed rate to the calciners (two each) of 12 mL/min, producing a calcine density of approximately 0.5 g/cm^3. Each waste can has the capacity to accommodate the calcine volume from approximately 14 L of concentrated liquid waste. Assuming a waste can internal volume of 3.456 L and an 20% freeboard void volume in each can, a total of about five cans of waste will be generated per week from processing 140 L of waste. With the external volume of the waste can at 4 L, this process will provide a volume reduction ratio of 7. Volume reduction ratio is defined as the volume of the unconcentrated aqueous waste processed divided by the volume of the total number of waste cans generated.

4. LIQUID DECAY TANK REQUIREMENTS

All indications are that a minimum decay time of 90 days will be required before the waste can be processed. Two 1800-L tanks (minimum volume) will be required to accommodate a 140-L/week feed rate decayed for 90 days. Some of the more important benefits derived from decaying the waste before processing are as follows:

1. Maximum waste can heat loading will be exceeded without decaying the waste.
2. Less processing will be required of secondary waste streams to meet the LLW system discharge requirements for radionuclides.
3. Xenon off-gas treatment equipment can be eliminated.
4. Radiation exposure will be reduced.
5. Fewer routine decontamination problems will be encountered, resulting in reduced operating cost.

Table 8. AECL off-gas treatment system material balance
(Stream numbers are indicated in column heads; units are grams per hour unless otherwise noted)

Component	1	2	3	4	5A/5B	6A/6B
Iodine	6.840E-02	6.840E-02	0.000E+00	7.093E-03	2.293E-03	2.293E-03
H_2O	3.358E+04	1.625E+04	1.733E+04	1.685E+03	5.448E+02	5.448E+02
NO	0.000E+00	0.000E+00	4.499E+02	0.000E+00	0.000E+00	2.799E+00
NO_2	0.000E+00	0.000E+00	6.898E+02	0.000E+00	0.000E+00	2.103E+02
Hg	3.049E+02	3.049E+02	3.049E-02	3.162E+01	2.034E-01	1.017E-01
Ru	1.342E-02	1.342E-02	1.342E-08	1.392E-03	4.499E-04	4.499E-04
Ce	1.678E-01	1.678E-01	1.678E-07	1.741E-02	5.627E-03	5.627E-05
Cs	6.363E-01	6.363E-01	6.363E-07	6.599E-02	2.133E-02	2.133E-04
Sr	3.884E-01	3.884E-01	3.884E-07	4.027E-02	1.302E-02	1.302E-04
Te	1.281E-04	1.281E-04	1.281E-10	1.329E-05	4.296E-06	1.718E-10
Air	0.000E+00	0.000E+00	0.000E+00	0.000E+00	1.407E+02	1.407E+02
HNO_3	2.092E+03	2.025E+02	0.000E+00	2.100E+01	6.790E+00	0.000E+00
Temp., °C	25	105	105		40	750
Vol. flow, L/h (I)	40.00	21.43		2.22	0.72	
Vol. flow, L/h (V)			30297.38			3337.44
Post evap $Al(NO_3)_3$	2.00	Molar				

Table 8 (continued)

Component	7A/7B	8	9	10	11	12
Iodine	2.293E-03	4.586E-03	4.540E-03	4.540E-03	4.540E-06	4.540E-06
H_2O	5.448E+02	1.017E+03	2.167E+00	2.167E+00	2.167E+00	2.167E+00
NO	1.399E+00	5.738E+02	6.344E+02	6.344E+02	6.344E+02	6.344E+02
NO_2	2.124E+02	5.573E+02	2.787E+02	2.787E+02	2.787E+02	2.787E+02
Hg	1.017E-01	2.034E-01	2.034E-03	2.034E-03	2.034E-03	2.034E-03
Ru	4.499E-07	8.998E-07	8.998E-08	8.998E-08	8.998E-08	8.998E-08
Ce	5.627E-05	1.125E-04	1.125E-06	1.125E-06	1.125E-06	1.125E-06
Cs	2.133E-04	4.266E-04	4.266E-06	4.266E-06	4.266E-06	4.266E-06
Sr	1.302E-04	2.604E-04	2.604E-06	2.604E-06	2.604E-06	2.604E-06
Te	1.718E-10	3.437E-10	3.437E-12	3.437E-12	3.437E-12	3.437E-12
Air	1.407E+02	2.814E+02	2.814E+02	2.814E+02	2.814E+02	2.814E+02
HNO_3	0.000E+00	5.089E+02	0.000E+00	0.000E+00	0.000E+00	0.000E+00
Temp., °C	550	30	10	250	225	30
Vol. flow, L/h (I)		1.50				
Vol. flow, L/h (V)	2684.96	1017.94	859.78	1588.92	1512.97	920.54
Post evap $Al(NO_3)_3$						

Table 8 (continued)

Component	13	14	15	16	17	18
Iodine	4.540E-06	4.586E-05	7.093E-03	0.000E+00	0.000E+00	0.000E+00
H_2O	2.167E+00	9.784E+02	1.685E+03	0.000E+00	0.000E+00	0.000E+00
NO	6.344E+02	0.000E+00	0.000E+00	0.000E+00	0.000E+00	0.000E+00
NO_2	2.787E+02	0.000E+00	0.000E+00	0.000E+00	0.000E+00	0.000E+00
Hg	2.034E-03	2.014E-01	3.162E-01	3.130E+01	3.099E+01	3.130E-01
Ru	8.998E-08	8.098E-07	1.392E-03	1.392E-09	0.000E+00	1.392E-09
Ce	1.125E-07	1.114E-04	1.741E-02	1.741E-08	0.000E+00	1.741E-08
Cs	4.266E-07	4.224E-04	6.599E-02	6.599E-08	0.000E+00	6.599E-08
Sr	2.604E-07	2.578E-04	4.027E-02	4.027E-08	0.000E+00	4.027E-08
Te	3.437E-13	3.402E-10	1.329E-05	1.329E-11	0.000E+00	1.329E-11
Air	2.814E+02	0.000E+00	0.000E+00	0.000E+00	0.000E+00	0.000E+00
HNO_3	0.000E+00	2.544E+02	2.100E+01	0.000E+00	0.000E+00	0.000E+00
Temp., °C	25	90		25	40	
Vol. flow, L/h (I)		1.17	2.22	0.00	0.00	
Vol. flow, L/h (V)	920.54					
Post evap $Al(NO_3)_3$						

Table 8 (continued)

Component	19	20	21	22	23
Iodine	4.357E-05	2.293E-06	0.000E+00	0.000E+00	4.586E-05
H_2O	1.739E+04	9.153E+02	0.000E+00	1.733E+04	1.831E+04
NO	0.000E+00	0.000E+00	4.499E+02	0.000E+00	0.000E+00
NO_2	0.000E+00	0.000E+00	6.898E+02	0.000E+00	0.000E+00
Hg	2.319E-05	2.318E-01	0.000E+00	3.049E-02	2.319E-01
Ru	8.232E-13	8.232E-07	0.000E+00	1.342E-08	8.232E-07
Ce	1.116E-10	1.116E-04	0.000E+00	1.678E-07	1.116E-04
Cs	4.230E-10	4.230E-04	0.000E+00	6.363E-07	4.230E-04
Sr	2.582E-10	2.582E-04	0.000E+00	3.884E-07	2.582E-04
Te	4.684E-16	4.684E-10	0.000E+00	1.281E-10	4.684E-10
Air	0.000E+00	0.000E+00	0.000E+00	0.000E+00	0.000E+00
HNO_3	2.417E+02	1.272E+01	0.000E+00	0.000E+00	2.544E+02
Temp., °C		30	30	30	30
Vol. flow, L/h (I)	16.79	0.91		16.99	18.16
Vol. flow, L/h (V)			1011.86		
Post evap $Al(NO_3)_3$					

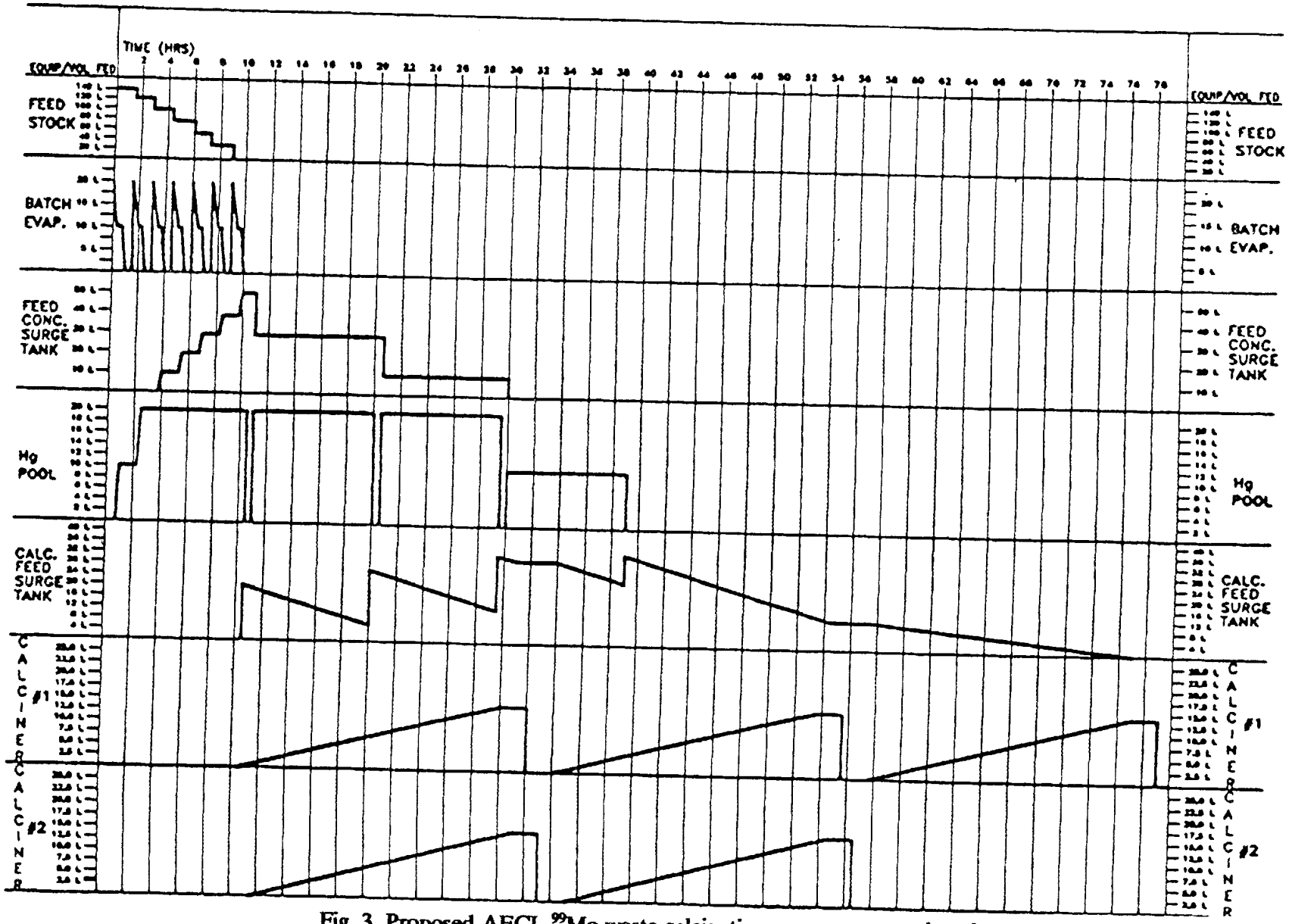

Fig. 3. Proposed AECL ^{99}Mo waste calcination process sequencing chart.

5. GAS DELAY PIT REQUIREMENTS

With the required 90-day decay, calculations indicate that no gas delay pit will be needed to regulate the release of Xenon. All other gaseous and volatile radionuclides, with the exception of ^{129}I, will also be eliminated from consideration in the calcine off-gas stream. However, a gas delay pit (column) and iodine trapping will be required as an integral part of the off-gas venting system for the 90-day-decay tanks.

6. CELL SPACE REQUIREMENTS

Various views of the proposed equipment layout are shown in Figs. 4, 5, 6, and 7. The layout depicted in these figures has not been examined completely for optimum configuration with respect to intended operations, required interconnections and service penetrations, and required maintenance. The equipment has been positioned at various elevations to take advantage of gravity feeds wherever feasible. This "draft" of the equipment layout is intended only to indicate that the proposed equipment will fit into Hot Cells 1 and 2 in Building 234. Floor space in the cells appears to be adequate. However, the height of these existing cells was restrictive. The height of the wet scrubber system required that this system extend above the hot cell hoist-bridge structure in Cell 1. Similarly, the two evaporator systems extend above the cell hoist-bridge structure in Cell 2. These pieces of equipment have been positioned to minimize the restricted movement of the hoists. All operational factors are to be considered during the required process optimization phase of this work to determine the optimum hot cell equipment layout.

Some of the required modifications for these hot cells will be to relocate the cell lighting and restrict cell-hoist movement so as not to inadvertently damage the equipment extending above the bridge support structure. Penetrations to connect the various pieces of process equipment will need to be made in the common wall between the cells. Other modifications will include improved manipulators with contamination boots, the installation of in-cell HEPA filters, and the addition of a chemical charging station to Cell 2.

7. MERCURY REMOVAL METHOD

The simplest method for mercury removal is to allow it to be collected in the NO_x scrubber system as recommended in communications with INEL personnel.[13] This approach would eliminate the need for specific mercury removal equipment. With this approach, however, the logistics of recycling the mercury nitrate/nitric acid solution to the ^{99}Mo processing facility creates a problem. Recycling bulk quantities of the recovered nitric acid/mercury nitrate solution to the ^{99}Mo process is not feasible since the two processes will be in separate buildings and the transportation of contaminated liquid is viewed as too hazardous an operation. Therefore, a separation process had to be chosen that would selectively extract only elemental mercury. Since it was unclear what effect large amounts of mercury would have on the ruthenium trapping kinetics, provisions had to be made to extract the mercury prior to calcination. Experimental work for this report has indicated that if the waste is calcined without first removing the mercury, the mercury will be partitioned between the calcine and the off-gas system. In general, the mercury behavior during calcination will be difficult to predict.

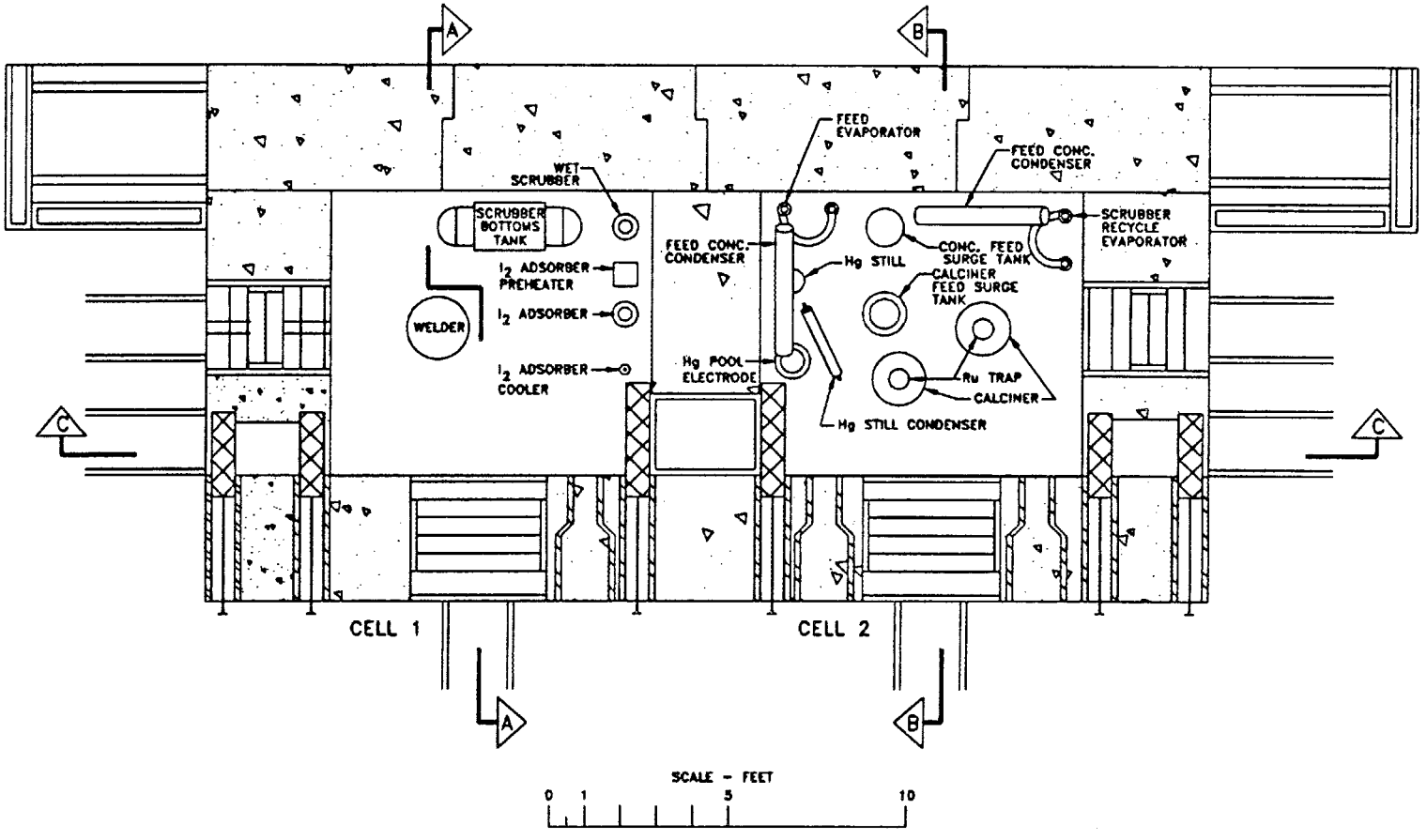

Fig. 4. Equipment layout in Cells 1 and 2, plan view.

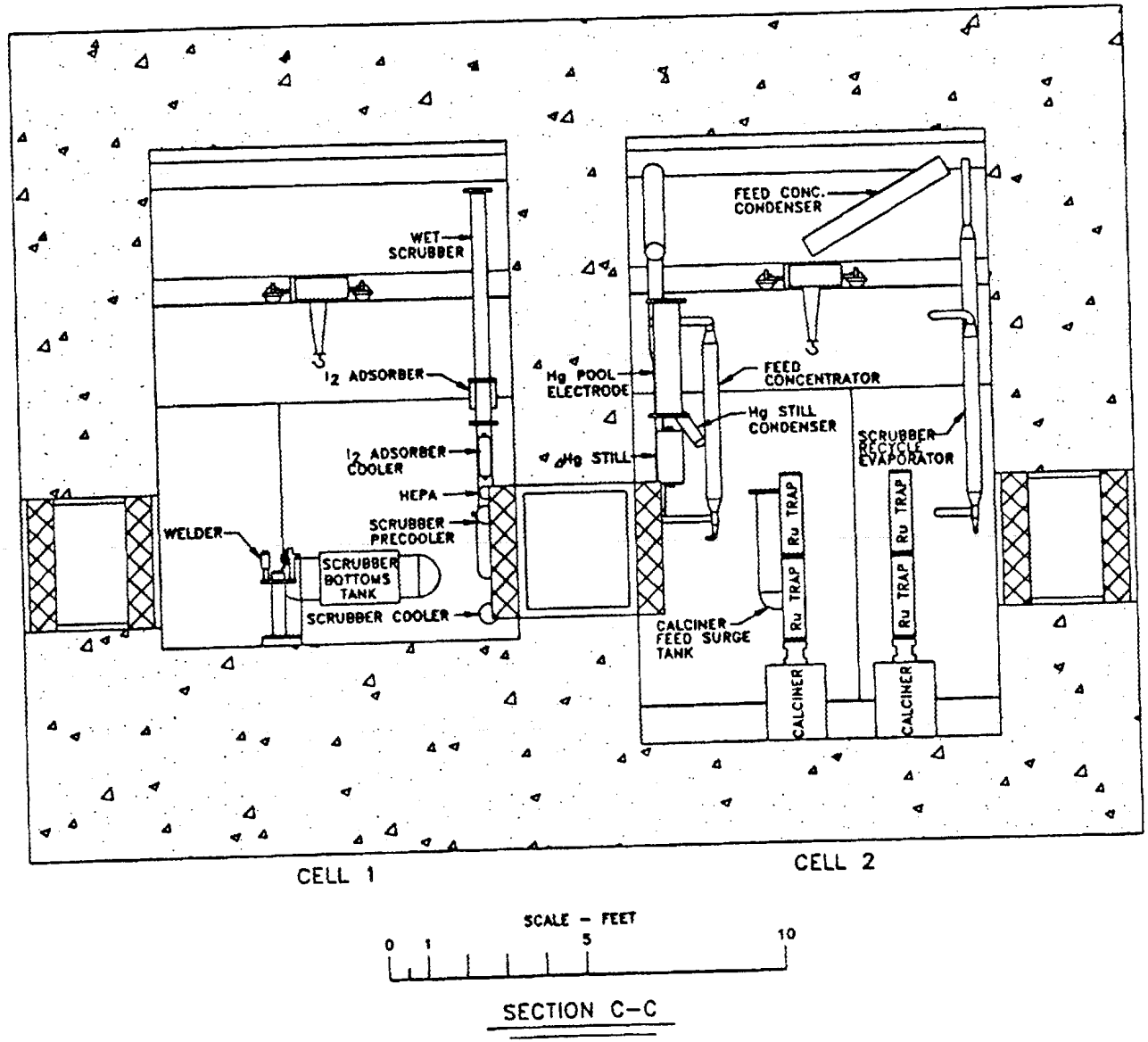

Fig. 5. Equipment layout in Cells 1 and 2, front view.

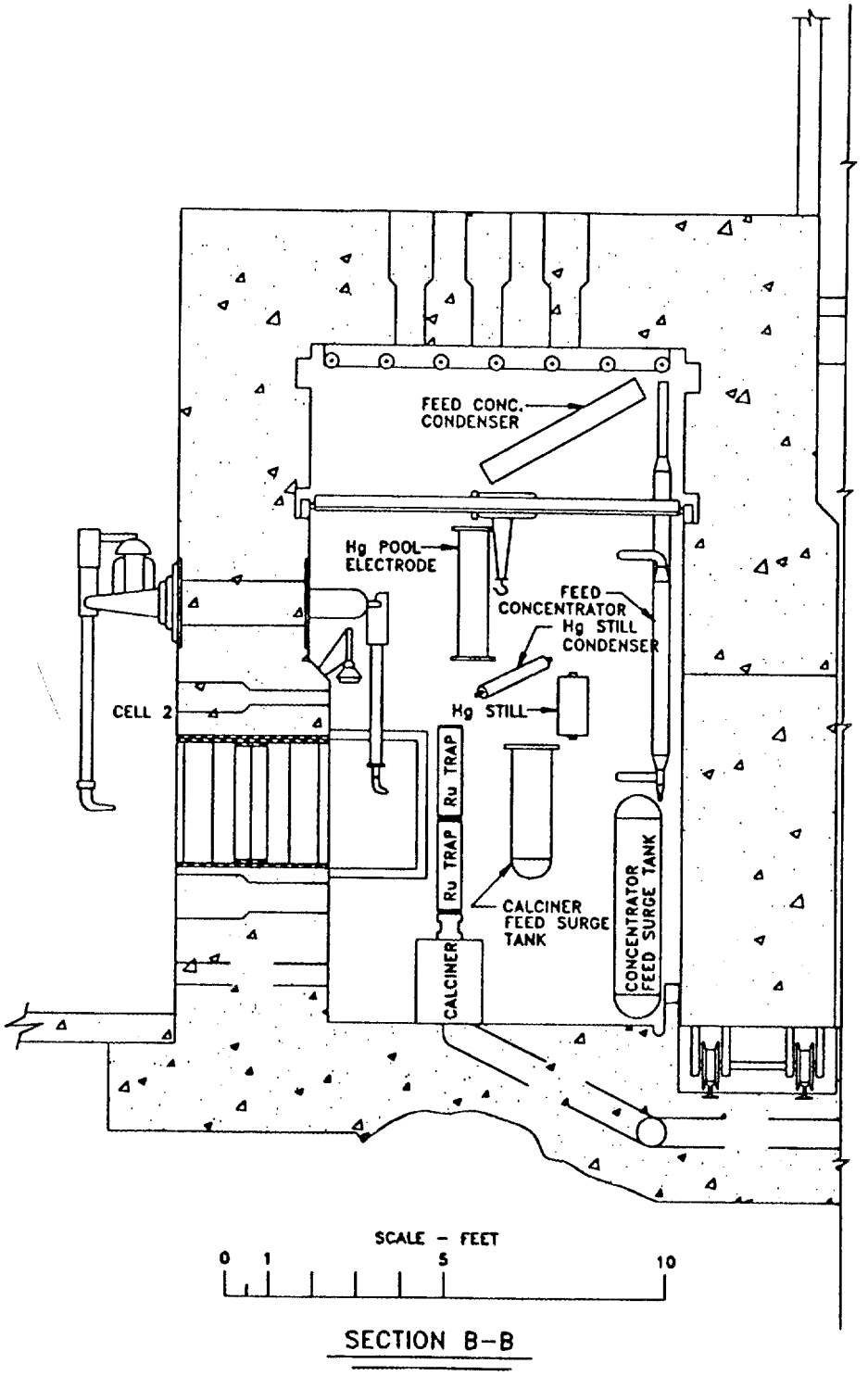

Fig. 6. Equipment layout in Cell 2, side view, facing east.

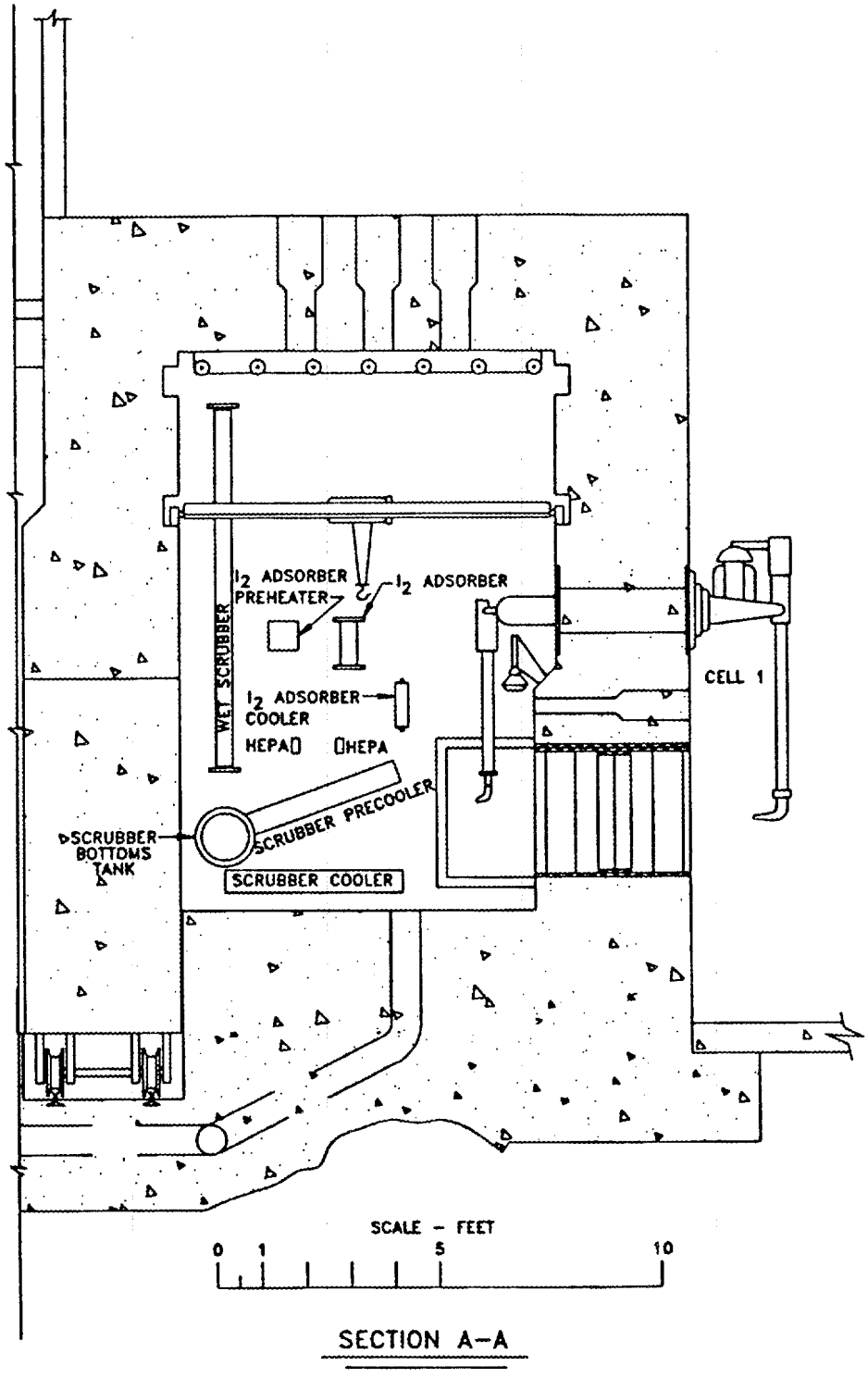

Fig. 7. Equipment layout in Cell 1, side view, facing west.

An electrolytic separation process has been chosen as the most advantageous method of mercury removal. This process will be applied prior to calcination. A so-called "mercury pool electrode" process has been evaluated by Idaho National Engineering Laboratory (INEL) personnel as a potential mercury extraction process for application in their waste calcination process.[14] Mercury removal before calcination is seen as the best option based on information from INEL. The INEL waste calcination process has a very large fraction of mercury (98.5%) evolving as a condensable vapor during calcination.[15] Approximately 6 g of mercury per day is released to the environment from this process even after passing through a very extensive off-gas treatment system. At present, INEL's method of processing the mercury is by recycling all secondary waste streams containing mercury back to the aqueous waste tanks. However, INEL has recently made the decision to investigate the application of the mercury pool electrolysis process as a means of extracting the mercury from the waste process.[16] It should be noted that the INEL process has the capacity to treat more than 7680 L/day of aluminum waste with a mercury content (including recycle) on the order of 24 kg/day and that the release of 6 g of mercury per day represents a DF of 4000.

This mercury extraction process is schematically represented in Fig. 8. The apparatus consists of a vessel where the pool of mercury in the bottom of the vessel acts as a cathode. The nitric acid/mercury nitrate solution (an ideal electrolyte) is fed into the vessel containing a platinum anode. Using a dc power supply (potentiostat) to provide the driving force (voltage), the elemental mercury is extracted (plated out) into the mercury pool cathode at the bottom of the vessel.

The calculated throughput of this mercury removal process indicates that 140 L of feed can be processed in approximately 54 h with a 99% mercury removal efficiency. Using a 6-in. mercury pool electrode, a 20-L batch of liquid waste can be treated in about 18 h, requiring approximately 11 A of current. The rate of this process depends on the size of the electrode and the current density applied during electrolysis. Therefore, this process can easily be scaled up to reduce the run time if necessary.

Possible radionuclides that may collect at the cathode (mercury electrode) are rhodium and ruthenium. The only product generated at the platinum anode is gaseous oxygen. Using a potentiostat power supply, the voltage of the process can easily be monitored to indicate the completion of a run. The process can be stopped by simultaneously draining the pool of mercury from the vessel and switching off the power supply. The mercury may contain other radionuclides from which it must be separated in order to ease the need for bulky shielding during transport of the mercury to the ^{99}Mo process facility. For this reason a mercury still has been incorporated into the design to purify the mercury before recycle to the ^{99}Mo processing facility. The bottoms from this still will be transferred to the calciner feed surge tank.

This electrolytic process is viewed as a simple means of eliminating a problem waste with no secondary waste stream to treat. The process is simple to operate, no additives are required, and the equipment is compact and relatively inexpensive.

8. OFF-GAS COMPOSITION AND TREATMENT

The off-gas treatment system of the calcination process is used for removing certain constituents from the gas stream leaving the calciner in order to make this gas suitable for release to the environment. After traveling through this treatment system, the gas stream exits the process through a stack and

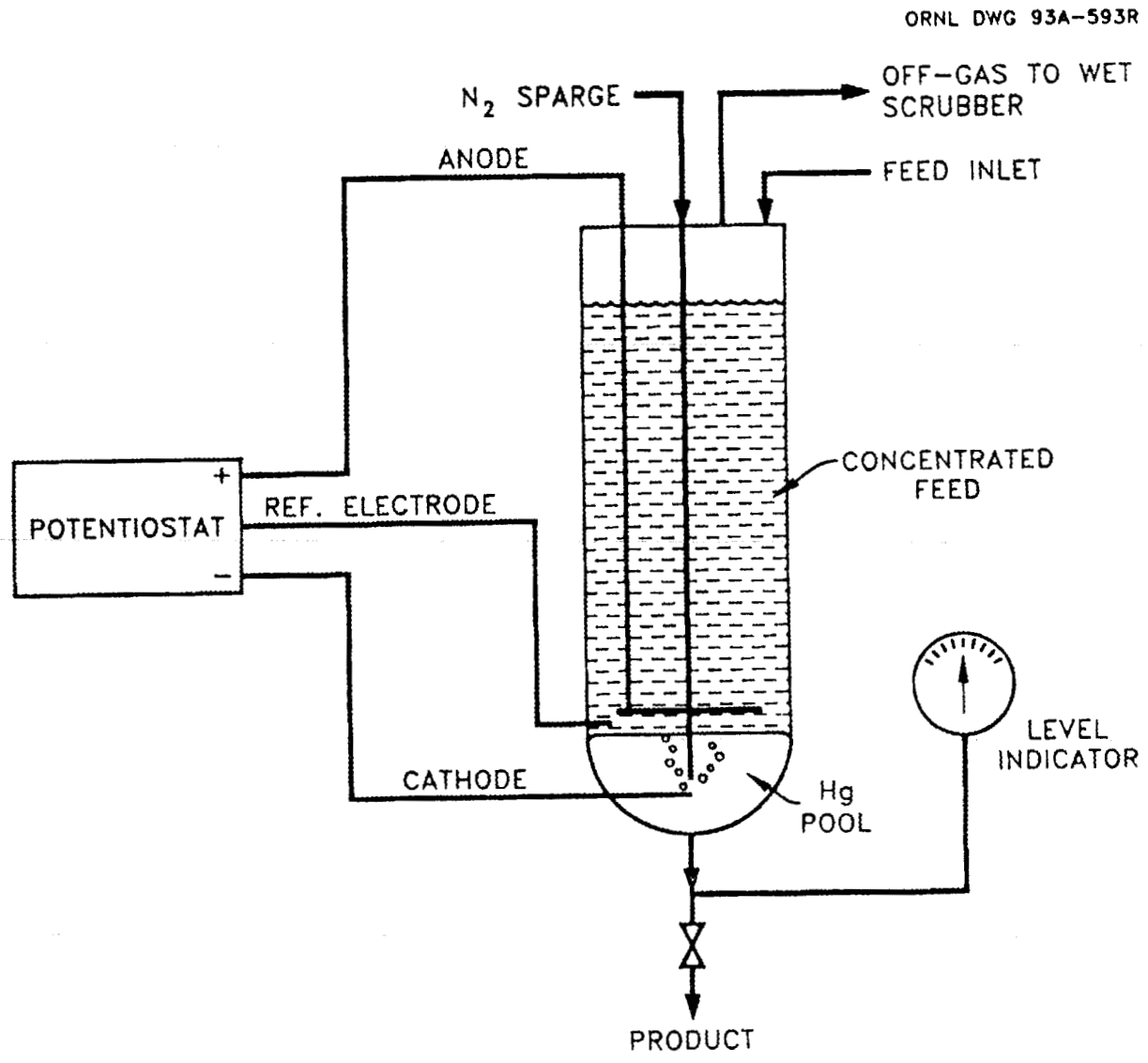

Fig. 8. Schematic of the mercury pool electrode.

goes into the atmosphere. From the material balance table found in Sect. 3 (Table 8), the compositions of the effluent waste streams evolving from the off-gas treatment system may be calculated based on each stream's respective volumetric flow rate. The concentrations of mercury, NO, NO_2, and the pertinent fission product radionuclides are listed in Table 9. Also listed are the total radionuclide concentrations for the aqueous stream (Stream 19) which will be discharged to the LLW system. It should be pointed out that the gaseous waste stream (Stream 13) will be diluted by mixing with the high volume flow of the cell ventilation stream before being exhausted to the atmosphere.

Table 9. Off-gas treatment system effluent stream compositions

Component	Concentration	
	Stream 13 (gas)	Stream 19 (aqueous)
Hg	2.21×10^{-6} g/L	1.38×10^{-7} g/L
NO	6.89×10^{-1} g/L	0
NO_2	3.03×10^{-1} g/L	0
I	8.73×10^{-13} Ci/L	4.59×10^{-10} Ci/L
Ru	3.27×10^{-7} Ci/L	1.64×10^{-10} Ci/L
Ce	3.90×10^{-7} Ci/L	2.18×10^{-9} Ci/L
Cs	4.01×10^{-8} Ci/L	2.12×10^{-8} Ci/L
Sr	3.93×10^{-8} Ci/L	2.14×10^{-9} Ci/L
Te	3.51×10^{-12} Ci/L	2.62×10^{-13} Ci/L
Total radionuclides	7.97×10^{-7} Ci/L	2.61×10^{-8} Ci/L

9. WASTE FORM CAN LOADING AND PROPERTIES

9.1 EXPERIMENTAL STUDIES

Experimental studies were made to determine the calcination behavior and the properties of the calcine product. The CEUSP waste solutions were primarily uranyl nitrate with a large amount of cadmium nitrate and some gadolinium nitrate. The ^{99}Mo waste solutions are mainly aluminum nitrate; they contain small percentages of mercuric nitrate and uranyl nitrate and parts-per-million amounts of many fission products. Therefore, the CEUSP results can only provide a preliminary estimate of the results for ^{99}Mo waste solutions.

The experimental studies started with a simulated feed of aluminum nitrate and nitric acid. The amount of nitric acid and the total nitrate in this simulated feed are the quantities expected for the ^{99}Mo waste after concentration by evaporation and a chemical reduction to remove most of the nitric acid. A calcination procedure and the properties of the Al_2O_3 calcine were determined with the feed rates and furnace temperatures as variables. The selected procedure and conditions were used to determine the effects of mercury, uranium, and some stable elements to represent some of the most common fission products. Some of the calcine characteristics of concern for long-term storage were measured.

9.1.1 Apparatus

The test apparatus schematically represented in Fig. 9 used stainless steel or quartz canisters of 3.5-cm ID and 250-mL working volume. These are scaled down from the probable AECL canister size by factors of about 2.5 for inside diameter (or 2.5^3 in volume). The canisters are heated in a single-zone laboratory muffle furnace of 5-cm ID. The feed solution drips from a tube on the canister centerline. The feed connection, an air purge connection, and the discharge through a water-cooled condenser are in a borosilicate glass cap sealed to the canister by a coupling using rubber O-ring or sleeve seals. The feed solution was metered by a Masterflex tubing pump with a variable-speed motor that allowed rates of about 0.5 to 33 mL/min. The actual test apparatus is shown in Fig. 10.

9.1.2 Procedures

The power to the furnace was controlled manually using a timed on-off controller. Three thermocouples were positioned in the annulus between the canister and the ceramic furnace liner. Large radial and axial temperature gradients were observed with the solution feed rate and the amount of calcine in the canister as important variables.

The startup procedure was different for the stainless steel and quartz canisters. The stainless steel canisters were heated up while empty, and the feed of solution was started after the thermocouples indicated the selected test temperatures. The quartz canisters were charged with 30 to 50 mL of feed solution at room temperature. The furnace was turned on, and the feed of solutions was started when brown fumes (NO_x) were observed in the condenser. After the feed of solution was completed, the furnace power and purge airflow continued until there were no more brown fumes leaving the canister. After a cooldown period, the calcine and the condensate weights and volumes were measured. All the calcines had top surfaces that were flat enough to allow a simple measurement of volume by measuring the length of void above the calcine. Samples of condensate were titrated to pH = 7 using 1 *M* NaOH solution.

The preceding procedures were applicable to all the canister-loading experiments. The detailed procedures applicable to specific tests or measurements of calcine properties and behavior are described with the results of such tests in the following subsections.

The conversion of the aluminum nitrate–nitric acid solutions into calcined Al_2O_3 solids in the test apparatus went very well mechanically without any difficulties from foaming, eruptions, or other upsets that were typical of CEUSP initial experimental tests. The conditions and results for the 14 tests are in Table 8. The calcination behavior for a continuous feed was observed visually using an open-top stainless steel beaker in a pot furnace. The solids formed at the beaker walls and bottom. The fluid in the center boiled vigorously, but without any eruptions or splattering. The fluid wetted the stainless steel poorly and was usually contained inside a film or cavity of solids that appeared to be both Al_2O_3 and decomposing $Al(NO_3)_3$ solids.

9.1.3 Calcine Density Results

The density of calcine in the waste can is a very important result since high densities reduce the number of waste cans that must be processed and stored. A quantitative measure of this result is the volume reductions from the original liquid waste volume to the final sealed-canister volume. The typical ^{99}Mo waste concentration is 1.07 *M* aluminum (as unconcentrated feed), which is equivalent to

ORNL DWG 93A-595R2

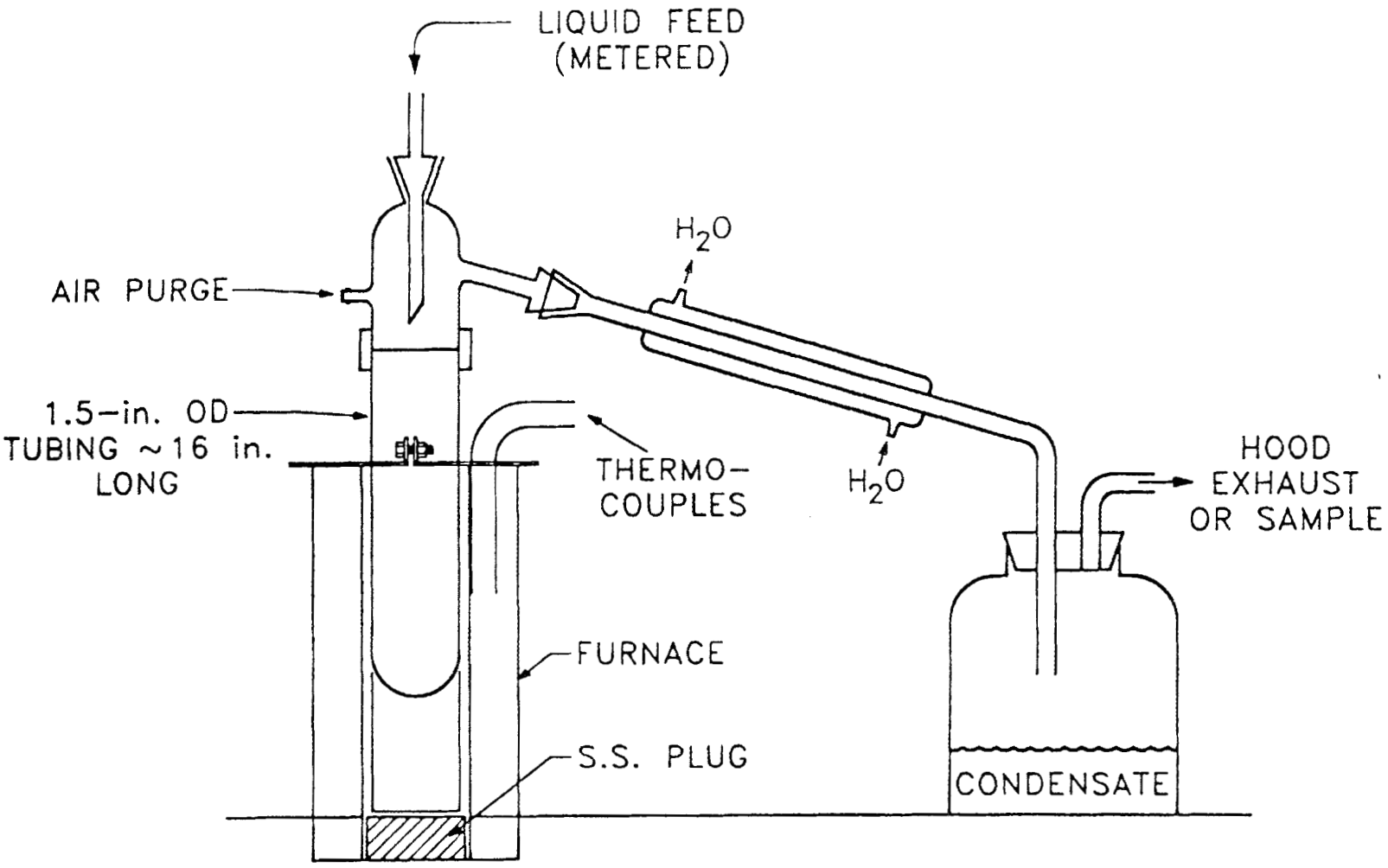

Fig. 9. Schematic of the AECL ^{99}Mo waste calciner experimental apparatus.

Fig. 10 Experimental setup of the AECL calciner.

about 55 g/L of Al_2O_3. For solidification of ^{99}Mo waste by cementation, the volume changes from the processes of concentration, neutralization, and solidification will give a volume increased by a factor of approximately 1.6. Calcination is a somewhat more complex process, but will be more advantageous than cementation by producing a volume reduction ratio of 7 or more. The first objectives of our experimental studies of calcination were to demonstrate simple trouble-free calcination results and a useful volume reduction.

The first three experimental tests showed low calcine densities of 0.23 to 0.25 g/cm^3 (Table 10). These densities indicate aluminum concentrations of about 4.4 times that in the ^{99}Mo waste solutions and would give volume reduction ratios of less than 4, allowing for some freeboard above the calcine. For Test 1, a bubbling, off-white slurry was visible through the quartz tube wall above the furnace after 500 mL of the simulated feed had been fed to the quartz tube. After 10 min without feed, feed was resumed at a lower rate. After an additional 50 mL was fed, the bubbling slurry was again visible. The product resulting after calcination was complete was a soft, porous agglomerate with many voids between agglomerates and with no wetting or scaling to the tube walls. The Test 3 calcine was easily emptied into a beaker. Half of the calcine poured out when the canister was tipped, and the remainder poured out when the tilted tube was tapped lightly.

The appearance and results for these tests can be explained as follows. The evaporation with continuous feed gives a thick slurry of solids with many vapor bubbles. A solid foam forms at the bottom of the thick slurry. The calcination of this solid foam gives the loose agglomerates with many voids, but the feed liquid does not penetrate the solid foam layer to fill these voids. Test 2, with a lower feed rate and temperature; Test 3, with a metal canister and higher temperatures; and Test 5, with a very low feed rate all gave the same calcine appearance and low densities. For Test 4, $NaNO_3$ was added to the feed to give a Na/Al mole ratio of 1. This gave a higher calcine density of 0.40 g/cm^3, but the amount of Al_2O_3 was unchanged at 0.23 g/cm^3. This calcine was a plug instead of loose agglomerates, and the top was concave from wetting of the calciner tube wall. The plug was loose in the tube and was easily shaken out as several pieces of cylindrical shape.

A significant increase in the calcine density was demonstrated by using high feed rates for short periods and longer periods of zero or low feed rates. The concept was that the slug of feed would collapse the calcine structure to greatly reduce the porosity. Test 5 was conducted with 50 mL-increments of feed at about 33 mL/min with about 21 min of zero feed between additions. The feed nozzle plugged between additions due to evaporation of water at the nozzle tip. Tests 7 and 8 used low feed rates (about 0.5 mL/min) to prevent this plugging and the high rate to give total feed amounts of 50 or 60 mL per cycle.

This feed procedure gives porous plugs of calcine with some layered appearance. The last cycle of feed addition gives a more porous or loose agglomerate layer on the top. This procedure gives very high vapor rates when the high rate of feed drips on to the hot, dry calcine. Peak condensate rates of 12 mL/min were measured for two cycles of Test 8, and some vapor is lost because the high rates overload the condenser. This high rate of vapor would require a larger ruthenium trap and a larger condenser than for a constant feed rate.

Test 9 was made with mercuric nitrate added to the base feed of aluminum nitrate and nitric acid. The feed cycle was also modified to limit the maximum vapor rates. The cycle tested was about 0.5 mL/min for 20 min and then increased to 8 mL/min to give 60 mL total per cycle.

Table 10. Test conditions and results for ^{99}Mo waste calcination, Tests 1-21

	1	2	3	4
Canister type	Quartz	Quartz	Stainless steel	Quartz
Changes in test conditions	First test	Lower feed rate and temp.	Metal can and higher temp.	$NaNO_3$ in feed
Feed concentrations				
Total NO_3^-, *N*	8	8	8	8
% NO_3^- as $Al(NO_3)_3$	95	95	95	72
% NO_3^- as HNO_3	5	5	5	4
% NO_3^- as $NaNO_3$	0	0	0	24
Initial feed, mL	50	30	0	30
Feed rate, mL/min	3.26	2.28	2.31	2.86
Total feed, mL	550	400	400	515
Total feed, g	764	556	556	720
Furnace temperature,[a] °C	500→775→700	600 ± 15	720 ± 20	800 ± 30
Condensate, mL	542	391	395	505
Condensate, g	663	486.3	483.2	616.8
Calcine weight, g	71.4	52.0	51.8	89.4
Calcine volume, cm^3	285	229	236	225
Calcine density, g/cm^3	0.25	0.23	0.22	0.40 (Al_2O_3→0.23)
Calculated Al_2O_3, g	71.0	51.7	51.7	51.7 (Na_2O→31.4)
Volatilities by difference, g	30	18	21	14
Condensate acid, *N*	7.14	6.80	6.68	7.22
Condensate acid as % of feed NO_3^-	86	83	82	88

Note for Tests 1-4:

[a]Canister wall temperatures are lower than the furnace temperatures; 100+°C lower for quartz canister and about 40°C lower for stainless steel.

Table 10 (continued)

	5	6	7	8
Canister type	Stainless steel	Quartz	Quartz	Stainless steel
Changes in test conditions	Intermittent feed	Low feed rate	Intermittent feed	Intermittent feed
Feed concentrations				
Total NO_3^-, *N*	8	8	8	8
% NO_3^- as $Al(NO_3)_3$	95	95	95	95
% NO_3^- as HNO_3	5	5	5	5
% NO_3^- as $NaNO_3$	0	0	0	0
Initial feed, mL	0	20	50	40
Feed rate, mL/min	2.2 ave. [a]	1.10	2.6 ave. [b]	3.4 ave. [c]
Total feed, mL	350	300	900	820
Total feed, g	486	417	1251	1140
Furnace temperature,[d] °C	670 ± 40	720 ± 20	680-780	680-840
Condensate, mL	343	292	890	800
Condensate, g	418.6	361.6	1078.7	966.6
Calcine weight, g	44.1	38.1	114.2	104.2
Calcine volume, cm^3	~110	190	224	245
Calcine density, g/cm^3	~0.40	0.20	0.51	0.43
Calculated Al_2O_3, g	45.2	38.7	116.2	105.9
Volatilities by difference, g	23.0	17.0	58	67.3
Condensate acid, *N*	7.16	7.12	7.02	6.90
Condensate acid as % of feed NO_3^-	88	87	87	84

Notes for Tests 5-8:

[a]Feed cycle was 50 mL/cycle; 50 mL in 1½ min and 0 for 21 min.

[b]Feed cycle was 50 mL/cycle; ~0.5 mL/min for 18 min and 33 mL/min for 1.2 min.

[c]Feed cycle was 60 mL/cycle; ~0.5 mL/min for 17 to 24 min and 33 mL/min for 1.2 min.

[d]Canister wall temperatures are lower than the furnace temperatures; 100+°C lower for quartz canister and about 40°C lower for stainless steel.

Table 10 (continued)

	9	10	11	12
Canister type	Quartz	Quartz	Quartz	Stainless Steel
Changes in test conditions	$Hg(NO_3)_2$ feed rate	Feed rate	$UO_2(NO_3)_2$	$UO_2(NO_3)_2$ higher HNO_3 & lower temp.
Feed concentrations				
Total NO_3^-, *N*	8.2	8.0	7.8	7.64
% NO_3^- as $Al(NO_3)_3$	92.6	95	94	79
% NO_3^- as HNO_3	4.9	5	5	20
% NO_3^- as other metals	Hg → 2.5	0	U → 1.2	U → 1.1
Initial feed, mL	50	40	33	0
Feed rate, mL/min	2.3 ave. [a]	2.4 ave. [b]	2.4 ave. [b]	2.1 ave. [c]
Total feed, mL	470	640	513	525
Total feed, g	658	889.6	717	716
Furnace temperature,[d] °C	680 ±	710 ±	720 ± 40	610 ± 20
Condensate, mL	468	625	509	523
Condensate, g	578.2	751.5	621.0	639.0
Calcine weight, g	64.7	81.9	68.3	60.2
Calcine volume, cm^3	212	230	260	151
Calcine density, g/cm^3	0.31	0.36	0.26	0.40
Calculated Al_2O_3, g	60.7	82.7	63.3	53.5
Volatilities by difference, g	15	56.2	28	17
Condensate acid, *N*	7.26	6.88	7.14	7.06
Condensate acid as % of feed NO_3^-	91	84	91	93

Notes for Tests 9-11:

[a]Feed cycle was 60 mL/cycle; ~0.5 mL/min for 20 min; then to 60 mL at 8 mL/min.

[b]Feed cycle was 60 mL/cycle; ~0.5 mL/min for 20 min; then to 60 mL at 10 mL/min.

[c]Feed cycle was 40 mL/cycle; 3.5 mL/min for 10 min; then ~0.5 mL/min for 10 min.

[d]Canister wall temperatures are lower than the furnace temperatures; 100+°C lower for quartz canister and about 40°C lower for stainless steel.

Table 10 (continued)

	13	14	15	17
Canister type	Quartz	Quartz	Quartz 3.5-cm ID	Quartz 5.0-cm ID
Changes in test conditions	Add cesium Higher temp. than #12	Add barium	Feed rate equal to cond rate	Like #15 but 5.0-cm ID
Feed concentrations				
Total NO_3^-, *N*	7.66	7.61	8.0	8.0
% NO_3^- as $Al(NO_3)_3$	78	79	95	95
% NO_3^- as HNO_3	20	20	5	5
% NO_3^- as other metals	U → 1.1 Cs → 0.2	Ba → 0.5	--------	--------
Initial feed, mL	45	33	50	120
Feed rate, mL/min	2.2 ave. [a]	2.7 ave.[b]	3.4	5.9
Total feed, mL	545	700	400	660
Total feed, g	745	943	--------	--------
Furnace temperature,[c] °C	715	660 ± 50	650	650
Condensate, mL	543	633	389	599
Condensate, g	664.7	774	--------	--------
Calcine weight, g	63.4	74.5	51.9	85.9
Calcine volume, cm^3	189	141	223	355
Calcine density, g/cm^3	0.34	0.53	0.23	0.24
Calculated Al_2O_3, g	53.5 UO_x → 6.5 Cs_2O → 1.4	72.4 BaO → 2.2	51.7	85.2
Volatilities by difference, g	17	94		
Condensate acid, *N*	7.10	7.36		
Condensate acid as % of feed NO_3^-	92	87		

Notes for Tests 13-17:

[a]Feed cycle was 20 mL/cycle; 3.5 mL/min for 10 min; then to 0.5 mL/min for 10 min.

[b]Feed cycle was about 40 mL/cycle; low for 15 min, 33 mL in 1 min.

[c]Canister wall temperatures are lower than the furnace temperatures; 100+ °C lower for quartz canister and about 40 °C lower for stainless steel.

Table 10 (continued)

	18	19	21
Canister type	Stainless steel can 8.25 cm ID	Stainless steel can 8.25 cm ID	Stainless steel can 8.25 cm ID
Changes in test conditions	Like 17 but SS can	Continue feed to test 18 can	Copper plate under can
Feed concentrations			
Total NO_3^-, *N*	8.0	8.0	8.0
% NO_3^- as $Al(NO_3)_3$	95	95	95
% NO_3^- as HNO_3	5	5	5
% NO_3^- as other metals	--------	--------	--------
Initial feed, mL	20-H_2O	0	125
Feed rate, mL/min	7.4[a]	<5 ave[a,b]	<6 ave.[a,b]
Total feed, mL	1000	800 or 1800	875
Total feed, g	--------	--------	--------
Furnace temperature,[b] °C	490[b]	640[b]	640[b]
Condensate, mL	--------	--------	--------
Condensate, g	--------	--------	--------
Calcine weight, g	129.1	233.4	121.9
Calcine volume, cm^3	444	409	282
Calcine density, g/cm^3	0.29	0.57	0.43
Calculated Al_2O_3, g	129.2	232.5	113.1

Notes for Tests 18-21:

[a]The short furnace and can height give a different (poor) heat transfer as compared to the canisters.

[b]Intermittent feed with 100- or 125-mL batches.

[c]Canister wall temperatures are lower than the furnace temperatures; 100+°C lower for quartz canister and about 40°C lower for stainless steel.

Tests 11, 12, 13, and 14 were made with additions of uranyl nitrate, barium nitrate, cesium nitrate, or additional nitric acid to the base feed solution.

The results (Table 11) show only small effects on the calcine density for the following variables:

1. continuous feed rates of 1.1, 2.3, and 3.3 mL/min,
2. stainless steel versus quartz canisters,

3. Hg/Al ratio of 0.036 mol/mol versus no mercury,
4. U/Al ratios of 0.020 or 0.022 mol/mol versus no uranium,
5. Ba/Al or Cs/Al ratios of 0.01 mol/mol, and
6. HNO_3/Al ratios of 0.76 mol/mol versus 0.16 mol/mol.*

The only major effect on calcine density was from intermittent feed rates (Table 9). The effects were as follows:

1. A high intermittent feed rate for 8% of the time doubled the density.
2. An intermittent feed rate for about 10% of the time increased the density about 50%.

The furnace temperature had a significant effect on calcine densities. For otherwise similar conditions, the calcine densities were 10% higher for 600 to 660°C tests as compared to 700 to 760°C tests.

The calcine density appeared to be lower (more voids) at the calciner walls. A test in a 1.6-cm-ID canister gave vapor bubbles that pumped or perked fluid to the top and resulted in a very low (0.1-g/cm^3) and anomalous density. For more normal calcination behavior, the calcine density increased with ID as follows:

- 3.5-cm-ID quartz canister: 0.22 or 0.23 g/cm^3,
- 5.0-cm-ID quartz canister: 0.24 g/cm^3, and
- 8.25-cm-ID stainless canister: 0.29 g/cm.^{3}**

The furnace temperatures were 620 to 660°C for the quartz canisters and 490 to 520°C for the stainless steel canister; this temperature difference probably causes most of the higher density for the can.

With no allowance for freeboard in the canister during calcination, the highest calcine densities show aluminum concentrations that are 9 to 10 times those in waste tank solutions. The maximum practical volume reductions defined as the solution volume divided by the canister volume (which included an approximate 20% freeboard void volume) for process design are probably about 7. These require the intermittent feed procedure.

9.1.4 Calcine and Condensate Compositions

The preferred calcination result is to leave all the metals as oxides in the canister and to remove all the water and nitrate as gases to the off-gas system. The removal of nitrate and water is limited by equilibrium and kinetic limits. Metals can be lost to the off-gas system by entrainment or as volatile compounds. Analyses and material balances determined for nitrate, water, and metals in the calcine or condensate are shown in Table 12.

---

*The 0.76 ratio is that of the tank waste, and the 0.16 could result from chemical denitration during evaporation.

**Much of this increase could be from the lower furnace temperature.

Table 11. Densities and variables for ^{99}Mo waste calcination

^{99}Mo test no.	Bulk density (g/cm^3)	Calciner material	Feed rate (mL/min)		Feed composition			Average furnace temperature (°C)
			Average	Maximum	HNO_3/Al (mol/mol)	Other metal	Metal/Al (mol/mol)	
14	0.53	Quartz	2.7	33	0.76	Ba	0.01	660
7	0.51	Quartz	2.6	33	0.16	None	—	760
8	0.43	Stainless steel	3.4	33	0.16	None	—	760
5	0.40	Stainless steel	2.2	33	0.16	None	-	670
4	0.40	Quartz	2.86	2.86	0.16	Na	1.0	800
12	0.40	Stainless steel	2.1	3.5	0.78	U	0.022	610
10	0.36	Quartz	2.4	10	0.16	None	-	710
13	0.34	Quartz	2.1	3.5	0.78	U Cs	0.020 0.010	710
9	0.31	Quartz	2.3	8	0.16	Hg	0.036	680
11	0.26	Quartz	2.4	8	0.16	U	0.020	720
1	0.25	Quartz	3.26	3.26	0.16	None	—	Variable (500 → 775)
2	0.23	Quartz	2.28	2.8	0.16	None	—	600
3	0.22	Stainless steel	2.31	2.31	0.16	None	-	720
6	0.20	Quartz	1.1	1.1	0.16	None	-	720

Table 12. Chemical analysis of products: ^{99}Mo waste tests

Metals in feed	Furnace temperature (°C)	Test no.	Calcine analysis		Condensate	
			Nitrate (wt %)	Metal (symbol/wt)	Symbol	Parts per million volume (mg/L)
Al	600	2	1.60			
	710	10			Al	150
	760	8	1.79			
	760	7	0.32			
Al, Hg	680	9	0.47	Hg/4.4	Hg	7200
Al, U	610	12	1.79	U/8.4	U	28
Al, U	720	11	0.67		U	<0.1
Al, U, Cs	710	13	1.05	U/9.20 Cs/2.15	U, Cs, Al	9.3, <0.1, 52
Al, Ba	660	14	1.04	Ba/210	Ba	TBD
Al, Na	800	4	9.85			

With the exception of mercury, the amounts carryover of metals into the condensate were all small values of 0.3 wt % or less. The condensate analysis showed the amounts listed in Table 13 based on the salts dissolved in the feed solutions.

Large amounts of a yellowish or a reflective film deposited on the top canister walls and the quartz cap walls during Test 9. This was probably condensed mercury compounds that would not appear in either the calcine or the condensate samples. The cap weight gain was measured and assumed to be HgO. The analysis and measurements from the run with mercury gave the results as listed in Table 14.

The deposits observed on the calciner tuber wall could easily account for the remaining mercury (1.81 g mercury or 1.95 g HgO). These results show an approximately equal three-way division: one third in the calcine, one third in the condensate, and one third as deposits on the system walls. These deposits are probably easily soluble in condensed nitrate acid. Depending on the system configuration, the deposits can accumulate or can dissolve in condensate that returns to the calcine or to the condensate collection. Since the deposit on the calciner tube wall was in the tube (but not in the calcine), the division of mercury was almost exactly half in the calciner tube and half to the off-gas system.

The calcine analyses for Ba, Cs, and U all show 94 to 102% of the amounts in the feed. Considering that the solids may not be completely homogeneous and the exact volumes of feed were not accurately measured, these results give reasonable material balances.

Table 13. Condensate analysis for metals

Test no.	Metal	Condensate amount (% of feed)
10	Al	0.22
12	U	0.27
11	U	<0.01
13	Al	0.08
	U	0.10
	Cs	<0.01

Table 14. Mercury distribution in Test 9

Component	Mass (g)	Distribution (wt %)
Feed solution:	9.58	100
Calcine	2.85	30
Condensate	3.37	35
Cap (1.6 g HgO)	1.55	16
Total measured	7.77	81

9.1.5 Feed Rate Versus Canister Diameter

For the batch calcinations in waste cans, the waste feed rate and the loading time increase with can diameter. The sizes of the waste cans for the ^{99}Mo waste were selected to be convenient for the AECL storage facilities. Our experimental tests were scaled down in size about 2.5 in inside diameter (or 2.5^3 in volume).

The allowable feed rate depends on the behavior during calcination and must be determined experimentally. For the CEUSP wastes (primarily UO_3), the controlling heat transfer was through the solids deposited on the canister wall. This results in a scaleup effect of feed rate proportional to can diameter. The CEUSP values for a continuous, constant feed rate were approximately as follows:

Feed rate (mL/min) = Canister ID (can).

The calcination of ^{99}Mo waste did not give a film of solids on the wall. The observed behavior could be expected to result in feed rate proportional to the square of the inside diameter (instead of proportional to the inside diameter as for CESUP). Experimental tests were made to determine the relationship.

Experimental tests were made using quartz tubes of 1.6-, 3.5-, and 5.0-cm can ID and in an open-top stainless steel can of 8.25-cm ID. For the quartz tubes, the accumulation of condensate was measured and the feed rate was adjusted to maintain solution inventories of about one-eight of the quartz tube volume. The furnace temperature was controlled at 650°C. The smallest quartz tube of 1.6-cm ID did not give a useful result as large gas bubbles lifted solution out of the furnace due to a coffee percolator effect. The condensate rates were 3 to 4 mL/min for the 3.5-cm ID and 5.5 to 6.0 mL/min for the 5-cm ID. The 8.25-cm-ID can was operated with an open top to permit visual

observation of the behavior. This was in a different furnace, and the furnace temperatures were 490°C at full furnace power. Operations at a feed rate of 10 mL/min appeared to give a steady-state inventory of fluid and a reasonable calcination behavior. Overall, the results indicate that the allowable feed rate for CEUSP or CRL waste can would be ≥12 mL/min. If the feed rate is proportional to $(ID)^k$, then k is probably about 1.4. For the proposed CRL canister of 9.6-cm ID, the feed rate could be as high as 23 mL/min.

9.1.6 Other Experimental Measurements

A variety of measurements were made and are reported here to answer some flowsheet questions.

9.1.6.1 Densification of Calcine in Water

A test was made with one product (Test 2) to determine if flooding with water would settle it into a dense bed. This calcine (original density of 0.13 g/mL) had been handled to inspect and sample and had a bulk density of 0.26 g/mL. The 46.1 g of calcine plus 150 mL of water became very warm (almost hot), indicating a large heat of hydration. It did not settle or compact to any measurable extent. The canister was capped and shaken vigorously to slurry the calcine in water. The agglomerates did not show any visible change and sounded like gravel against the canister wall. The calculated Al_2O_3 density after settling was 0.29 g/mL (very little density improvement). The increase appeared to result from filling of some large voids without any significant breakup of the agglomerates.

9.1.6.2 Densification of Calcine by Crushing

The Test 3 and Test 7 calcines were emptied into beakers and crushed by using a pestle. This was done with 50 applications of moderate pressure without use of a mortar of intentional grinding. The bulk density of the sample was measured after each treatment, and the results are shown in Table 15. The Test 7 calcine was then ground by using a mortar and pestle, and the bulk density of the powder was measured.

Table 15. Results of densification by mild crushing or grinding
(Units are grams per cubic centimeter)

	Test 3	Test 7
No treatment	0.22	0.51
First treatment	0.48	0.49
Second treatment	0.50	0.54
Third treatment	0.52	0.61
Grinding	----------	0.96

The Test 3 calcine had large voids, and the first crush treatment gave a large increase in bulk density. The Test 7 calcine was a cylindrical plug without large voids, and the first crush treatment gave a reduced density. The calcination of the same waste in a rotary kiln with breaker bars or rods would probably give densities like those for the crushing treatments but would probably not equal the density from grinding.

9.1.6.3 Recalcination at 850°C

Four calcine products were recalcined in the canister for 2 h at 850°C. The results are shown in Table 16.

Table 16. Recalcination results

Test no.	Original calcination temperature (°C)	Weight loss based on original weight (%)
2	600	3.2
6	720	1.5
7	760	2.5
12	610	0.9

9.1.6.4 Weight Gains for Calcines Exposed to Air

The weight gains by calcines exposed to air probably indicate the pickup of water. These weight gains can be much larger than the amount of water initially remaining in the calcine products. The measurements were made without any selection or careful control of the air exposure conditions. The results (Table 17 and Table 18) show that increases in weight are possible. The approximate 6 wt % weight gains in open beakers may be near equilibrium with air at about 30°C and 70% relative humidity. A different experiment with 46 g of calcine and 150 g of water when mixed together resulted in a very warm (almost hot) temperature.

9.2 CALCULATED HEAT LOADINGS AND ALLOWABLE DENSITIES

Calculations were made to estimate the decay heat expected in the canisters after calcination. Assuming the usable space in the waste can is filled with calcine (20% freeboard void volume), it is conceivable that one could exceed the allowable watt loading of the waste can if the calcined material were too dense. The maximum allowable heat loading per waste can is 16 W. The 16 W per can is based on the assumption that one of the AECL "storage baskets" will be filled about every 3 months, and allowing for decay, the average wattage per can (36 cans per basket) will be the required 12 W per can by the time the basket is placed in the concrete storage canister (concrete silo). The maximum allowable bulk density of the waste, assuming a 16 W per can maximum and 90 days decayed waste, is then calculated to be 1.02 g/cm^3.

9.3 CALCULATED EFFECTS OF RADIOLYTIC DECOMPOSITION

One important concern for storage of the solidified waste is the radiation damage effects. The radiation damage to the calcined oxides and the metal canisters will not be significant. The water and the nitrate remaining in the calcined oxides can be decomposed into gaseous products. For solidification by cementation, the amounts of gaseous products are large; therefore, the storage containers must be vented. After calcination in canisters, the amounts of water and nitrate per mole of aluminum (or per unit amount of fission products) are about 0.001 of those in cementation solids.

Table 17. Air exposure conditions and weight gains
(For canisters with open tops or loose caps in ambient air)

Test no.	Days after calcination	Weight gain (g)	(wt %)
1	18	1.6	2.2
2	11	1.1	2.1
3[a]	8 (~4 in beaker)	3.2	5.8
4	6	1.4	1.5
5	5	0.6	1.3
6	5	0.8	2.1
7	4	1.33	1.2

[a]Calcine in open beaker.

Table 18. Calcine weight gains versus air exposure times
(For canister tops open to ambient air)

	Calcine no.				
	6	8	9	10	11
Calcine weight, g	37.4	104.2	61.4	81.9	68.3
Date calcined	7-21[a]	7-20	7-22	7-23	7-26
Weight, wt %					
7-26-93	0.5	1.2	0.3	0.2	0
7-27-93	0.8	1.4	1.0	0.6	0.6
7-28-93	1.3	1.5	1.3	0.9	0.9
7-30-93	2.1	1.8	1.8	1.2	1.5
8-02-93	----	2.2	2.2	[b]	2.3

[a]This product was recalcined to 850°C on 7-21-93.
[b]Calcine from Test 10 in open-top beaker gained 4.6 g in 3 days or 6.8 wt % total gain.

Acceptable storage of sealed canisters without venting could be indicated by two different calculations. One is to calculate a rate of gas formation that is too low to cause difficulty over the planned storage life. This calculated rate would be low for low nitrate and water contents but is difficult to calculate. The other calculation is the very conservative one of calculating the gas pressure by assuming that all the nitrate and water remaining in the calcine are decomposed.

It has been estimated that the residual water and nitrates for this calcine will be in the range of < 1% total. These estimates have been verified by experimental data (see Table 12). As a conservative estimate, 1% each of water and nitrates has been assumed in making a calculation of the gas pressure resulting from the radiolytic decomposition of these constituents. Approximately 1.4 mol of H_2 and

0.2 mol of N_2 will be generated from the residual water and nitrates. It is assumed that the O_2 will be consumed as oxides of the canister metal. With an estimated capsule storage temperature of approximately 250°C, the calculated internal pressure is 372 psig. The calculated stress for an AECL proposed capsule (3½-in.-diam Schedule 10 pipe, 19.6 in. long, 0.12-in. wall) is 6800 psi. The allowable stress for stainless steel is 10,300 psi at 250°C. Therefore, if residual water and nitrates are maintained below 1% each, the increased pressure due to gas generated from the radiolytic decomposition of residual nitrates and water will not affect the integrity of the waste can, and venting of the waste can will not be necessary. The CEUSP waste cans have been in storage now for 7 years, and there has been no indication of any problems with capsule integrity. It should be noted that the CEUSP capsule has a wall thickness of 0.083 in. versus the heavier AECL waste can wall thickness of 0.12 in.

9.4 WASTE RETRIEVAL PROCESS

Results of experiments on the calcination of surrogate waste have indicated that the calcine in not likely to adhere to the inside surface of the waste can. Tests indicate that the waste material will pour out of the waste can with little if any effort and that acid dissolution from the waste can will not be necessary. However, acid dissolution may be necessary if, at a later time, it becomes desirable to reprocess the calcified waste to recover the highly enriched uranium or it becomes necessary to reprocess the calcine into a final waste form suitable for permanent disposal. Due to the limited time for experimental work, the schedule did not permit acid dissolution experiments to be conducted. However, work on a similar aluminum-type calcined waste[17] at INEL indicated that, even after 12 years of storage, from 89 to 95% of the waste dissolved in 8 *M* nitric acid at 90°C in 30 min. This waste had been in storage for 12 years at a maximum temperature of 525°C. The waste was originally calcined at a temperature of 550°C. It should also be noted that during initial developmental stages of the CEUSP process, surrogate waste containing depleted uranium was repeatedly recovered by acid dissolution from CEUSP experimental runs and reprocessed for future use.

During the optimization phase of this work, a series of systematic acid dissolution runs should be made to correlate calcine dissolution with such parameters as calcination temperature, the effects of trace elements, acid types and normality, and dissolution temperature. This work should also be influenced, whenever possible, by the possible future waste reprocessing scheme that may be required.

10. PROCESS OPTIMIZATION

The following is a listing of topics which, if completed, have the potential to optimize the size of the proposed process. Information on some of these topics already exists and needs only to be located while other areas will require a process optimization program to resolve the questions.

Following each topic is a category listing which designates why the topic was included in the list. Category 1 identifies data required to complete the process design. The majority of these items focus on the unique composition of the ^{99}Mo waste stream and its behavior in the calciner itself or on specific AECL/Canadian regulatory or other requirements. Category 2 identifies the topics related to design optimization. These topics have the potential to simplify the process design and to reduce the equipment size. Currently all of the process steps have been demonstrated to some degree and could

be scaled up or down as required. Design contingency factors would be reduced by completing these tests. Category 3 items are those which focus on providing Operational Support data to the actual hot operation of the equipment. Category 3 also includes the preliminary determination of operating parameters which will result in improved process reliability and waste form stability.

10.1 CALCINATION PROCESS

1. Verify all calcination parameters in full-size testing with surrogate feed. (Category 2)

2. Verify best calcination conditions on actual waste material. (Category 3)

3. Investigate the influence of additives and process parameters on fission product volatility, leachability, redissolution, and calcine density. Additives such as silicon to produce the insoluble cesium mineral pollucite (cesium aluminosilicate) and possibly the insoluble strontium compound of $SrSiO_3$. The addition of titanium to form a leach-resistant strontium titanate. (Category 3)

4. Investigate methods to improve density of calcine material. Compaction with a simple ram followed by additional feed and calcination, vibratory compaction during or after calcination, application of ultrasound during calcination to break up bubbles, and formation of a slurry of the calcine with water followed by reheating to 800°C. (Slurrying would also remove any leachables and improve the long-term waste-form properties.) (Category 2)

5. Determine the typical (nominal) void volume of the waste can. (Category 2)

6. Determine the nominal levels of residuals in the calcined material (e.g., H_2O, NO_3). Develop appropriate analytical techniques. (Category 2/3)

10.2 OFF-GAS PROCESSES

1. Determine distribution of Ru, Cs, Ce, Sr, and Hg as a result of calcination. (Category 2)

2. Determine a suitable excess-mercury disposal method (e.g., mercury amalgam with aluminum or another process). (Category 1)

3. Perform characterization studies of the mercury pooled electrode mercury removal method:

   3.1 Throughput/processing time versus electrode area (Category 2)
   3.2 Electrode design (Category 2)
   3.3 Configuration/agitation optimization (Category 2)
   3.4 Relation of voltage with product yield (Category 2)
   3.5 Other radionuclides extracted by the process (Category 1)

4. Perform characterization studies of the mercury distillation/purification process. Determine effects of other noble metals precipitating with the mercury. (Category 2)

5. Determine emission limits for AECL facility. (Category 2)

6. Perform characterization studies of the ruthenium trap:

   6.1 Operating temperature (Category 2)
   6.2 Flow conditions (Category 2)
   6.3 Trapping efficiency (Category 2)
   6.4 Method for detecting saturation (Category 1)
   6.5 Final disposal treatment (Category 1)
   6.6 Effects of water vapor, nitric acid vapor, and mercury vapor on trapping efficiency (Category 2)

7. Determine inventory requirements for mercury when equilibrium is reached between ^{99}Mo production process and the waste treatment process. (Category 3)

10.3 WASTE CAN PROCESS

1. Determine secondary can closure method, crimp or welded closure. (Category 1)

2. Determine recommended waste can material. (Category 1)

3. Determine if the weld joint design of the CEUSP-type can is adequate for AECL needs. (Category 1)

4. Assess the waste can welding parameters/program. (Category 2)

5. Determine hygroscopic characteristics of calcined material. (Category 1)

6. Assess waste retrieval process. (Category 1/3)

11. SECONDARY WASTE STREAMS INFORMATION

The elimination or minimization of secondary waste streams from this waste treatment process has been one of the controlling factors in the development of this flowsheet. In some cases, a more efficient off-gas removal process could have been selected but would have resulted in a secondary waste stream that was difficult or impossible to treat given the size limitations of the existing AECL hot cells. The secondary waste streams have been limited to water and nitric acid, ruthenium-loaded ferric oxide traps, excess elemental mercury, spent zeolite from iodine recovery, and NO/NO_2.

12. COST ESTIMATION INFORMATION

12.1 PROJECT INTEGRATION

To facilitate prompt and manageable execution, the project will be divided into four phases. The four phases are process optimization, engineering design, construction, and preoperational testing. The ORNL project integration effort will ensure a smooth transition between the different phases, integrate all activities, and track progress relative to the proposed schedule and cost estimate.

12.1.1 Process Optimization

Due to the unique nature of this particular waste stream, operating parameters may need to be optimized to minimize equipment size/cost as the equipment is scaled to the proper size to meet the desired processing rate. The individual processes selected for inclusion in the waste treatment process application are based on well-proven technology. But the integration of all of the selected processes into a single process train as proposed has not been demonstrated.

All cold testing with simulated nonradioactive material will be conducted at ORNL. Because the equipment is relatively small and to eliminate any scaleup uncertainty, the cold test apparatus will be full scale. The details of the activities to be conducted in these cold tests were presented in Sect. 10 of this report.

A very limited number of laboratory-scale hot tests will be conducted at AECL to verify the cold testing program at ORNL. These tests would be conducted by AECL personnel with ORNL process development engineering support. The hot test presently envisioned will simply confirm the best evaporation and calcination process conditions developed in cold testing. These tests will be conducted in scaled-down equipment similar to the preliminary test apparatus used at ORNL for scouting tests. These hot tests are needed to confirm behavior of the actual waste and to verify product densities and final waste-form impurity levels.

12.1.2 Design

The conceptual design will begin immediately when the project is authorized. Initial effort in the conceptual design will be to target the elimination of process design uncertainties. All existing data relative to the design will be evaluated, and limited process development experiments may be required to develop additional engineering data. Design engineers will work closely with process development engineers to ensure that the optimization activities provide the needed engineering data.

The detailed design will provide design drawings for fabrication of the in-cell equipment and equipment layout drawings (both elevation and plan view). The initial effort will be to define needed cell services and any impact that equipment layout has on process operations to allow AECL to proceed with hot cell modification to accommodate the process. Actual design of hot cell modifications is not part of ORNL's scope of work. All ORNL design work will be supported by well-documented design calculations with all assumptions carefully defined.

12.1.3 Construction

The actual process equipment for hot cell installation will be fabricated at ORNL, by outside fixed-price fabrication shops, or by AECL and delivered to ORNL for testing. Required inspection will be conducted by ORNL inspection engineering and project design team members. AECL personnel are encouraged to accompany ORNL inspection teams to the fabrication shops. Where possible, equipment modules will be tested at ORNL immediately following fabrication, but in all cases the equipment will be tested with water before shipment to AECL. A detailed shipping plan will be developed to ensure that equipment will not be damaged in shipment to AECL. ORNL will provide engineering personnel at AECL to coordinate installation of the process equipment by AECL construction forces.

12.1.4 Preoperational Testing

ORNL will provide design and process development engineering support for preoperational tests. ORNL will also prepare a preoperational test plan to guide this testing phase. The tests will begin with water as a test fluid and proceed to the use of a simulated waste.

Cold-test data will be verified with simulated waste in the hot cell-installed process equipment. ORNL will assist in this phase with procedure development at AECL for hot operations. ORNL will also assist, if needed, in the hot startup of the facility and provide process engineering expertise on an as-needed basis throughout the hot operational phase.

12.2 SCHEDULE AND COST ESTIMATE

The schedule for the four phases of the project, as defined in Sect. 12.1, is shown in Fig. 11. In order to compress the schedule, the different phases of the project are shown with concurrent segments. Smooth transition between project phases and schedule oversight will be provided by the project integration activity. The total duration of the project is 5 years from project authorization to the start of hot operations.

The ORNL project cost estimates are provided in Table 19. The costs are itemized for the phases of the project, as defined in the project integration section, with the addition of the project integration activity. In addition to the 5-year project leading up to hot operation, this estimate includes $50,000 for ORNL to provide technical assistance during the first year of hot operations. The total cost for the project is approximately $7,700,000.

12.3 DESIGN AND CONSTRUCTION BASIS FOR ESTIMATE

Listed below is a breakdown of the cost estimate pertaining to the equipment construction and assembly, cold testing, etc. This estimate is a rough order of magnitude approximation of the possible cost of the aforementioned project. A team of engineers and chemists from the Chemical Technology and Robotics and Process Systems divisions at ORNL provided all the equipment descriptions and a very preliminary flowsheet. The design was based on the CEUSP system that operated in the 1980s time frame. There were no design engineering disciplines involved in this project (i.e., detailed engineering design was not a part of this estimate due to the time constraints

ORNL DWG 93A-590R

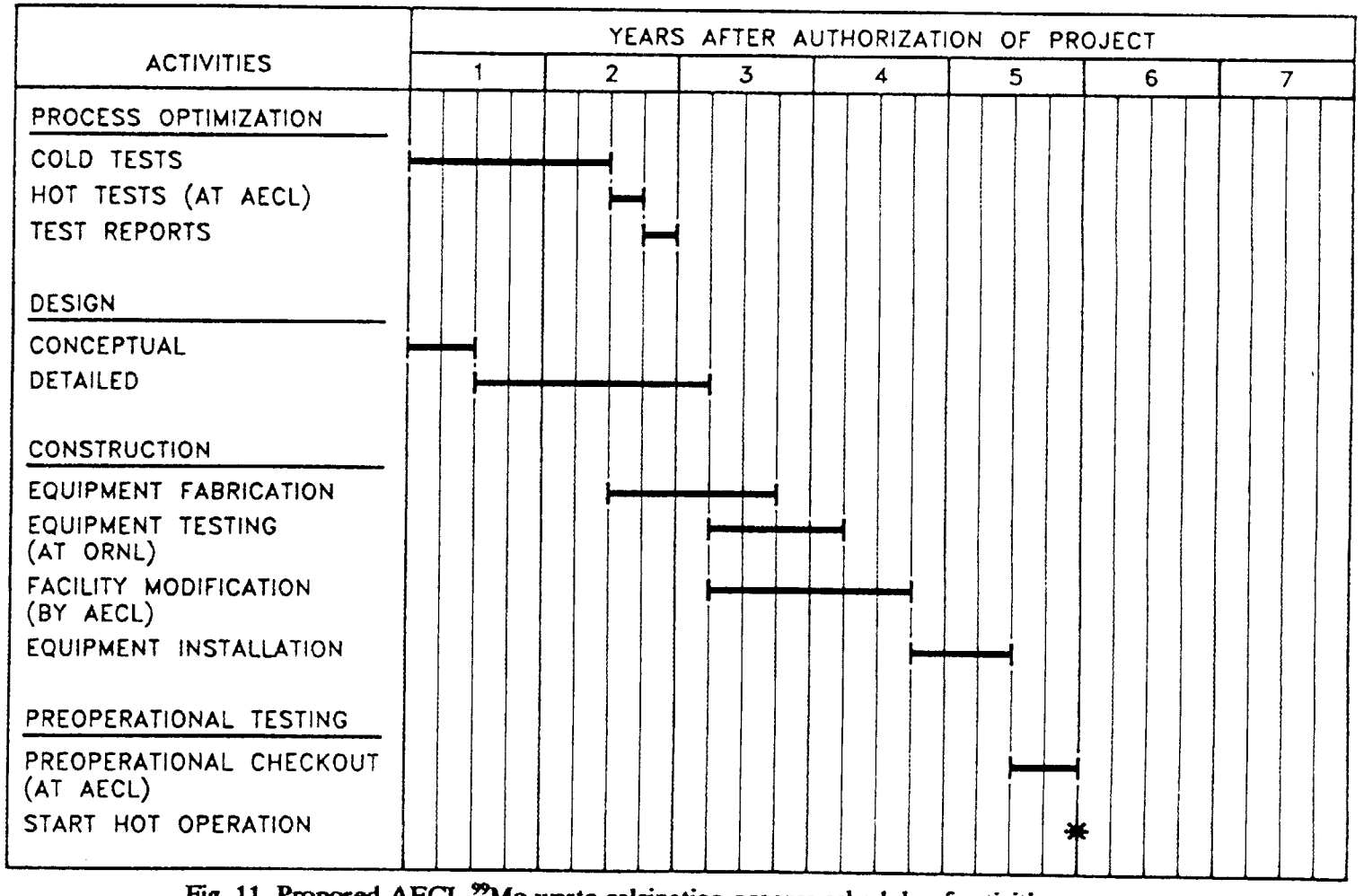

Fig. 11. Proposed AECL ^{99}Mo waste calcination process schedule of activities.

Table 19. ORNL project cost estimates

	Estimated cost by project year ($K)					
Project phase	1	2	3	4	5	Total
Project integration	200	200	200	200	100	900
Process optimization[a]	500	500[a]	0	0	0	1000
Design	600	600	125	0	0	1325
Construction	0	2000	1500	250	0	3750
Preoperational checkout[b]	0	0	200	300	150	650
Total	1300	3300	2025	750	250	7675

[a]Hot test to be conducted at AECL facility with only ORNL technical support included.
[b]Cost does not include operating crew—only Engineering support.

associated with the project). However, the system component pieces were designed by engineers with many years of experience in the design and construction of similar systems. The estimate was provided by an experienced estimator familiar with the costs of similar systems for hot cell operations. The system was assumed to be designed to the requirements of the U.S. Department of Energy (DOE) within the confines of the United States. All designs will conform to all applicable regulations as follows:

1. DOE general design criteria 6430.1A will be observed.
2. All DOE 5400 series of orders dealing with worker safety will be followed.
3. Vessels will have the American Society of Mechanical Engineers (ASME) code stamp.

The following is the assumed method of accomplishment:

1. Martin Marietta Energy Systems (MMES) will design and test the system and then ship it to AECL.
2. Design of the system will be performed by MMES Central Engineering Services.
3. Fabrication of the system will be performed by an outside fabrication shop.

All appropriate overhead charges have been included. A contingency has been added to the estimate. This estimate does not include any installation of the equipment at the AECL site. It is based upon very preliminary design information. More detailed flowsheet and equipment design need to be completed before a detailed estimate can be prepared. Dollar amounts are stated in the FY 1993 time frame, and no escalation is included. AECL will provide the costing for the decay feed tanks. All service feedthroughs into the proposed hot cell location of the equipment will be provided by AECL.

The estimates shown in Table 20 cover the requirements to fabricate a skid-mounted assembly that is tested and ready to install in the AECL facility. Mounting the equipment on approximately five skids appears to be feasible. No layout of the equipment has been made; therefore, the number of skids is an educated guess. These skids will be designed to allow for remote maintenance of any and all components of these skids.

13. SAFE OPERATIONS

The proposed equipment will operate at a moderate temperature and near atmospheric pressure. The chemical reactions, with the exception of the reaction of formaldehyde in the feed concentration evaporator, are of low energy. The formaldehyde reaction can be easily controlled as demonstrated in the safe operations of the CEUSP process. Little or no electrical shock hazards exist. The entire process in the hot cells is of relatively low hazard with respect to industrial safety.

Based on information received from AECL, the question of criticality safety in the calcined waste form that this process will generate has been examined by AECL and found to be of no consequence. Therefore, criticality safety issues with respect to the manipulation of liquid in tanks or special configurations of the solid calcine waste can were not considered in this report. However, in the unlikely event that uranium is transferred from the calciner by entrainment or some other means and is deposited in the ruthenium traps, a method of uranium detection is needed to guard against this accumulation. An X-ray system can be used to monitor these iron oxide traps to detect any buildup in uranium and thus mitigate any concerns of a criticality problem.

Facility modifications required for safer operations will include connecting Cell 2 to the high stack ventilation system and modifying Building 234 to have the building structure provide a secondary containment structure around the hot cells.

The design of the hot cell access penetrations and ports with respect to maintaining the proper seals when processing alpha material was examined. It is recognized that the quantity of high-hazard alpha material contained in the waste to be processed is relatively small (e.g., 7.6×10^{-6} g/L of ^{240}Pu)[18]. However, the following opinion is based on the conservative nature of this report. In general, the service penetrations of the hot cell could most probably be retrofit with an improved design to maintain a proper contamination control. However, the large "moving wall" rear access doors of Cells 1 and 2 will present a sealing problem that will require a considerable engineering effort to design and retrofit a seal/containment system considered safe for alpha work. It should be noted that this evaluation is an opinion based on one visit to the facility and on the review of schematics of the hot cells. No detailed engineering drawings were examined.

14. OPERABILITY, RELIABILITY, AND MAINTENANCE

14.1 OPERABILITY

The process controls of the proposed flowsheet are simple and unsophisticated. Operating parameters are broad with no process needing tight control.

Table 20. Detailed estimates for material and labor costs for design and construction

Item	Description	Total cost	Item	Description	Total cost
1	Concentrator evaporator (2 reqd)	$140,500	**Piping**		
2	Concentrated feed surge tank	6,660	Please note that the equipment layout is not complete; therefore, piping lengths are best guess.		
3	Feed concentrator condenser	7,500	24	Piping spec.	$124,500
4	Hg pool electrode vessel	4,580	25	Pipe sizes	56,250
5	40 AMP potentiostat	18,000	26	Fittings	80,000
6	Calciner feed surge tank	4,320	27	Valving	66,250
7	Calciner furnace (2 reqd)	12,000	28	Swaglok fittings	34,500
8	Feed nozzle with quick disconnect	9,160	29	NDT testing	$65,000
9	Ruthenium traps (14 reqd)	22,480		**SUBTOTAL**	**$426,500**
10	Off-gas precooler	2,500	**Instrumentation**		
11	Wet scrubber	11,300	30	Instrumentation	$150,000
12	York mesh demister	1,500		**SUBTOTAL**	**$150,000**
13	Scrubber bottoms tank	5,620	**Other support items**		
14	Scrubber cooler	2,500	31	Steel skids	$61,500
15	Iodine adsorber preheater	2,000	32	Misc. supports	$82,500
16	Iodine adsorber	3,580	33	Misc. electrical connectors	$82,500
17	Heat exchanger	2,500	34	Remote maintenance	250,000
18	Hg still	4,500	35	ORNL overhead	666,591
19	Iodine adsorber cooler	2,830	36	Procurement services	55,533
20	100 CFM HEPAs filter housing	50,000	37	Work-for-Others markup	$48,632
21	Stream jets (4 reqd)	2,250		**TOTAL DIRECT**	**$2,159,536**
22	Can welder with rotary table	15,000		**OVERHEAD**	**0**
23	Can seamer	4,500		**TOTAL**	**$2,159,536**
	SUBTOTAL	**$335,780**			

Table 20 (continued)

Item	Description	Total Cost	Item	Description	Total cost
Engineering and design			**Assembly and cold testing (con't)**		
1	Mechanical design drawings	$41,250	6	ORNL overhead	$101,400
2	Process engineering	$41,250	7	Procurement services	8,450
3	Engineering mechanics	206,250	8	Work-for-Others markup	$7,411
4	Electrical	16,500		**TOTAL DIRECT**	**$328,511**
5	Instrumentation	82,500		**OVERHEAD**	**0**
6	Project management	41,250		**TOTAL**	**$328,511**
7	Engineering services	41,250	**Cost summary**		
8	Work-for-Others markup	16,445		Line item cost	$2,974,742
	TOTAL DIRECT	**$486,695**		Total tax	0
	OVERHEAD	**$139,049**		**SUBTOTAL**	**$2,974,742**
	TOTAL	**$625,744**		Total indirect	0
Assembly and cold testing				**SUBTOTAL**	**$2,974,742**
1	Assembly of all components	$100,000		Overhead	139,049
	SUBTOTAL	**$100,000**		**SUBTOTAL**	**$3,113,791**
2	Cold testing of system	$55,000		Contingency	1,244,023
	SUBTOTAL	**$55,000**		**SUBTOTAL**	**$4,357,814**
3	Clean up after testing	$11,750		Market adjustment	0
4	Prepare skids for shipment to Canada	$29,500		**TOTAL**	**$4,357,814**
5	Freight to Canada	$15,000			

14.2 RELIABILITY

For the most part, standard processing equipment has been selected. The one exception is the electrolytic separation of mercury. However, this electrolytic process is viewed as simple to operate, requires no additives, and uses equipment that is compact and relatively inexpensive. Steam heat and process and chilled water have been utilized where feasible. Dependable and simple tube and shell heat exchangers are also utilized except in cases where only electrical heat is required or where it would be impractical (because of small size) to use steam. Mechanical pumping has been kept to a minimum, and gravity flow and steam jetting have been used wherever possible. This flowsheet contains very few moving parts, which should add to the reliability. Simplicity in design and therefore low maintenance is present in all components.

14.3 MAINTENANCE

Maintenance required for this flowsheet is believed to be minimal. The ruthenium and iodine traps have approximately a 2-year capacity. The anode material of the electrolyses is platinum, which will require little if any maintenance. The routine change out of the HEPA filters and the intermittent electrical heater replacements are seen as the only possible maintenance activities needed more frequently than annually.

14.4 POT CALCINATION ADVANTAGES RELATIVE TO OTHER CALCINATION METHODS

A pot calciner has low off-gas flows and therefore a smaller off-gas system compared with a rotary kiln or a fluidized-bed calciner. Even in a fluidized-bed system of minimum practical diameter (10 cm), a large gas flow rate is required just to keep the material that is being treated suspended in the heat zone. A rotary kiln generally requires a larger air purge than a pot calciner, and entrained particles will need to be trapped. A pot calciner has the advantage of having the calcination vessel also serve as the waste storage vessel, thus minimizing the handling of calcined material. Both the rotary kiln and the fluidized bed discharge solids which must be transferred and metered. The pot calcination apparatus is significantly simple. A rotary kiln has moving parts and seals which would require remote maintenance and replacement. The fluidized bed requires complicated control procedures and startup requirements.

15. CONCLUSIONS

At the request of AECL, a preliminary cost estimate has been prepared for the design and construction of a process to solidify the aluminum-based waste generated from AECL's ^{99}Mo production process. The process will solidify 140 L of aqueous waste per week resulting in the generation of five 4-L waste cans. The 140 L of waste can be processed in as little as 3½ days, assuming a 24-h workday. This proposed solidification system produces a welded waste can of dry solid waste with a volume reduction ratio of 7, which includes a 20% freeboard void volume in each waste can. The process utilizes a simple pot calcination method to produce an aluminum oxide (Al_2O_3) waste form with a bulk density of approximately 0.5 g/cm^3 and with residual water and nitrates totaling < 1 wt %. Aqueous waste, concentrated by a factor of 2, is fed into parallel calcination furnaces at an average rate of 12 mL/min. Calcination temperatures will range from 600 to 700°C.

A simple off-gas system has been designed to handle the fission products and other volatile components evolving from the calcination process. In this design, secondary waste streams have been limited to water and nitric acid, ruthenium-loaded ferric oxide traps, excess elemental mercury, spent zeolite from iodine recovery, and NO/NO_2. The release of mercury to the LLW system is approximately 3 orders of magnitude lower than the maximum allowable 5×10^{-4} g/L (0.5 ppm). The total β-γ activity is approximately 5 orders of magnitude below the maximum allowable 3×10^{-3} Ci/L.

The proposed process is configured from well-established technology with the only exception being a mercury removal process. However, this electrolytic process proposed for mercury removal is viewed as a simple means of eliminating a problem waste with no secondary waste stream to treat.

The mercury removal process is based on a simple electrochemical principle, is a simple design, is easy to control and operate, requires no additives, and uses compact and relatively inexpensive equipment. INEL presently plans to apply this process to its off-gas system.

In general, all the required components are designed to be operated without difficulty in a hot cell environment, require minimal and inexpensive maintenance, and are of a size that will fit into the existing hot cells (Building 234) at AECL. The processes are believed to be uncomplicated, easy to control, simple to operate, and inherently safe. Little if any entrainment of material in the off-gas system is expected, and all operations are relatively dust free and not prone to leaks or spills. All secondary waste streams have met the goal of being easily manageable with little or no further processing required. The recycle of a process resource (mercury) has been achieved in an uncomplicated manner. Emission limits to AECL's LLW system are easily met. Air emissions will also be of little concern with the mercury release being quite low.

A cursory comparative analysis of rotary kiln calcination, fluidized-bed calcination, and pot calcination was made. Comparative analysis of applying a 10-cm-diam fluidized-bed calciner* as a possible AECL waste treatment process revealed that the size of the off-gas system would be prohibitively large. For example, the volumetric flow evolving from a 10-cm-diam fluidized-bed system is approximately 340 L/min, which is very large when compared with this report's proposed pot calciner, which has an off-gas rate of approximately 20 L/min. This 17-fold increase in volumetric flow would, for example, require the ruthenium trapping system to be 25 in. in diameter (or would require 17 traps, each with a 6-in. diameter). Other off-gas equipment would also have to be comparably scaled up. Also, the controls of a fluidized-bed calciner are much more complicated than those of a pot calciner.

The application of a rotary kiln to the AECL ^{99}Mo process has the disadvantages of having high-maintenance moving parts that are expensive to replace; a lower practical operating temperature, which translates into higher residual nitrates and water; and operations that will require control of dust.

A cost estimate for specific project elements in this report—including equipment design and construction, equipment cold testing and process optimization, fabrication, and preoperational checkout at AECL—was made. Elements not included in this estimate were cost of equipment installation and required hot cell modifications at AECL, cost of AECL operating crew during preoperational checkout, and cost of installation of the required decay tanks. The estimated total cost was approximately $7.7 million. This is a rough conceptual cost which is conservative based upon current assumptions. Final cost estimates will be done during the next phase of this work. ORNL will work closely with AECL to develop the revised cost estimate when authority to proceed is obtained from AECL.

---

*A 10-cm-diam bed is the smallest practical size of fluidized-bed calciner. Calciners of this size are presently operating at INEL for pilot-scale testing for the larger calciner.

REFERENCES

1. C. P. McGinnis, E. D. Collins, R. Hall, J. K. Johnson, A. M. Krichinsky, B. D. Patton, J. T. Shor, and R. J. Vedder, "Development and Operation of a Unique Conversion/Solidification Process for Highly Radioactive and Fissile Uranium," *Nuclear Technology* 77(2), 210-19 (May 1987).

2. R. Odoj, E. Merz, and R. Wolters, "Effect of Denitration on Ruthenium Volatilization," pp. 911-917 in *Proceedings of the International Seminar on Chemistry and Process Engineering for High-Level Waste Solidification, 1-5 June 1981*, Institute for Chemical Technology, Julich, Germany, 1981.

3. J. P. Bibler, R. M. Wallace, and M. A. Ebra, "Mercury Removal from SRP Radioactive Waste Streams Using Ion Exchange",*Proceedings Waste Management '86 Symposium*, p. 471, Tucson, AR., vol. 2, R. G. Post, Ed., 1986.

4. R. E. Schindler, "Fluidized Bed Calcination of LWR Fuel—Reprocessing HLLW: Requirements and Potential for Off-Gas Cleanup," pp. 82-94 in *15th DOE Nuclear Air Cleaning Conference*, February 1979.

5. S. Weisenburger and K. Weiss, "Ruthenium Volatility Behavior During HLLW Vitrification in a Liquid-Fed Ceramic Waste Melter," in *Proceedings of the International Seminar on Chemistry and Process Engineering for High-Level Liquid Waste Solidification, 1-5 June 1981*, Institute for Chemical Technology, Julich, Germany, 1981.

6. *Control of Semivolatile Radionuclides in Gaseous Effluents at Nuclear Facilities*, Technical Reports Series No. 220, International Atomic Energy Agency, Vienna, 1982.

7. A. R. Bancroft, L. C. Watson, and C. W. Hoelke, *The Volatilization and Collection of Ruthenium and Cesium from Incorporating Fission Products into Glass*, CRCE-1004, AECL Research and Development, January 1961.

8. J. A. McCray and R. D. Boardman, *NO_x Abatement Pilot Plant 90-Day Test Results Report*, Idaho National Engineering Laboratory, September 4, 1991.

9. J. D. Christian, "Process Behavior and Control of Ruthenium and Cerium," presented at the ANS-AICHE Topical Meeting on Controlling Air Borne Effluents from Fuel Cycle Plants, August 5-6, 1976.

10. J. F. Birdwell, R. T. Jubin, and B. E. Lewis, *Evaluation of Iodine and NO_x Behavior in the Dissolver Off-gas and IODOX Systems in the Oak Ridge National Laboratory Integrated Equipment Test Facility*, ORNL/TM-11597, February 1992.

11. McElroy, J. L., et al., *Evaluation of WSEP High Level Waste Solidification Processes: Waste Solidification Program Summary Report*, Vol. 11, Battelle Northwest Laboratories, BNWL-1667, 1972.

12. B. J. Newby and D. W. Rhodes, *Ruthenium Behavior During Calcination*, ICP 1164, Idaho National Engineering Laboratory, September 1978.

13. D. D. Siemer, Applied Technology Department, Idaho National Engineering Laboratory, personal communication to J. F. Birdwell, June 29, 1993.

14. D. D. Siemer, Patent disclosure #WIN-91-011, Idaho National Engineering Laboratory, submitted August 2, 1991.

15. A. K. Herbst, *Mercury Concentrations in the Effluent Streams of the Idaho Chemical Processing Plant*, ACI-378, Allied Chemical, May 1979.

16. D. D. Siemer and B.A. Staples, Idaho National Engineering Laboratory, personal communication to D. W. Ramey, August 12, 1993.

17. B. A. Staples, G. S. Pomiak, and E. L. Wade, *Properties of Radioactive Calcine Retrieved from the Second Calcined Solids Storage Facility at ICPP*, ICP-1189, Idaho National Engineering Laboratory, March 1979.

18. R. D. Singh, *Reference Composition for ^{99}Mo Production Waste*, p. 15, IWMP-00132-TN-01, Rev. 0, AECL Protected Document, October 1993.

INTERNAL DISTRIBUTION

1. J. F. Birdwell
2. P. A. Haas
3. R. T. Jubin
4-8. D. W. Malkemus
9-13. C. P. McGinnis
14. L. E. McNeese
15. E. S. Meyers
16-20. B. D. Patton
21-30. D. W. Ramey
31. Central Research Library
32. Y-12 Technical Library
Document Reference Center
33. ORNL Patent Section
34-35. ORNL Laboratory Records
36. ORNL Laboratory Records, RC

EXTERNAL DISTRIBUTION

37. K. A. Coltharp, 286 Littleton St. Apt. 102, West Lafayette, IN 47906
38. R. J. Harrison, Chalk River Laboratories, Chalk River Ontario, Canada, K0J 1J0
39. B. H. O'Brien, Westinghouse Idaho Nuclear Company, Inc., Box 4000, Idaho Falls, ID 83415-5218
40-45. N. E. Pothier, Chalk River Laboratories, Chalk River Ontario, Canada K0J 1J0
46. D. D. Siemer, Westinghouse Idaho Nuclear Company, Inc., Box 4000, Idaho Falls, ID 83415-5213
47. R. D. Singh, Chalk River Laboratories, Chalk River Ontario, Canada K0J 1J0
48. B. A. Staples, Westinghouse Idaho Nuclear Company, Inc., Box 4000, Idaho Falls, ID 83415-5213
49. Office of Assistant Manager, Energy Research and Development, DOE-ORO, P.O. Box 2008, Oak Ridge, TN 37831-6269
50 -51. Office of Scientific and Technical Information, P.O. Box 62, Oak Ridge, TN 37831