MARTIN MARIETTA ENERGY SYSTEMS LIBRARIES
3 4456 0377039 1

ORNL/TM-12296

ornl

OAK RIDGE NATIONAL LABORATORY

MARTIN MARIETTA

Evaluation of Pressure Sensing Concepts: A Technology Assessment

R. L. Shepard
L. H. Thacker

ACKNOWLEDGEMENT

The work reported in ORNL/TM-12296 was supported by the Electric Power Research Institute, under contract RP 8004 "Evaluation of Pressure Sensor Technologies." The project was managed by J. M. Weiss who also provided leads to useful information and technical guidance that is very much appreciated.

OAK RIDGE NATIONAL LABORATORY
CENTRAL RESEARCH LIBRARY
CIRCULATION SECTION
4500N ROOM 175
LIBRARY LOAN COPY
DO NOT TRANSFER TO ANOTHER PERSON
If you wish someone else to see this report, send in name with report and the library will arrange a loan.

MANAGED BY
MARTIN MARIETTA ENERGY SYSTEMS, INC.
FOR THE UNITED STATES
DEPARTMENT OF ENERGY

This report has been reproduced directly from the best available copy.

Available to DOE and DOE contractors from the Office of Scientific and Technical Information, P.O. Box 62, Oak Ridge, TN 37831; prices available from (615) 576-8401, FTS 626-8401.

Available to the public from the National Technical Information Service, U.S. Department of Commerce, 5285 Port Royal Rd., Springfield, VA 22161.

This report was prepared as an account of work sponsored by an agency of the United States Government. Neither the United States Government nor any agency thereof, nor any of their employees, makes any warranty, express or implied, or assumes any legal liability or responsibility for the accuracy, completeness, or usefulness of any information, apparatus, product, or process disclosed, or represents that its use would not infringe privately owned rights. Reference herein to any specific commercial product, process, or service by trade name, trademark, manufacturer, or otherwise, does not necessarily constitute or imply its endorsement, recommendation, or favoring by the United States Government or any agency thereof. The views and opinions of authors expressed herein do not necessarily state or reflect those of the United States Government or any agency thereof.

ORNL/TM-12296

Instrumentation and Controls Division

EVALUATION OF PRESSURE SENSING CONCEPTS: A TECHNOLOGY ASSESSMENT

R. L. Shepard
L. H. Thacker

Date Published—September 1993

ACKNOWLEDGEMENT

The work reported in ORNL/TM-12296 was supported by the Electric Power Research Institute, under contract RP 8004 "Evaluation of Pressure Sensor Technologies." The project was managed by J. M. Weiss who also provided leads to useful information and technical guidance that is very much appreciated.

Prepared by
OAK RIDGE NATIONAL LABORATORY
Oak Ridge, Tennessee 37831-6285
managed by
MARTIN MARIETTA ENERGY SYSTEMS, INC.
for the
U.S. DEPARTMENT OF ENERGY
under contract DE-AC05-84OR21400

MARTIN MARIETTA ENERGY SYSTEMS LIBRARIES

3 4456 0377039 1

CONTENTS

LIST OF TABLES v

ABSTRACT vii

1. INTRODUCTION 1
   1.1 PROBLEM STATEMENT 1
   1.2 OBJECTIVE AND SCOPE OF INVESTIGATION 1
   1.3 REFERENCES 2

2. APPROACH 3
   2.1 REQUIREMENTS AND SPECIFICATIONS 3
   2.2 SCIENTIFIC LITERATURE AND PATENT SEARCH 12
   2.3 COMMERCIAL LITERATURE SEARCH 14
   2.4 SPECIFICATION MATRIX 15
   2.5 EVALUATION AND SELECTION PROCESS 15
   2.6 REFERENCES 16

3. FINDINGS AND ASSESSMENT 17
   3.1 COMPARISON OF EXISTING INDUSTRIAL PRODUCTS 17
   3.2 DESCRIPTIONS OF MAJOR APPLICABLE TECHNOLOGIES 22
      3.2.1 Silicon Pressure Sensors 18
      3.2.2 Fiber-Optic Pressure Sensors 27
   3.3 INNOVATIVE PRESSURE SENSOR TECHNOLOGY 32
   3.4 COMPARISON OF INNOVATIVE SENSORS 34
   3.5 ADVISORY COUNCIL REVIEW 40
   3.6 REFERENCES 41

4. CONCLUSIONS AND RECOMMENDATIONS 45
   4.1 POSSIBLE SOLUTIONS FOR PRESENTLY INSTALLED TRANSMITTERS 45
   4.2 POSSIBLE EXISTING REPLACEMENTS 45
   4.3 PROMISING TECHNOLOGIES FOR DEVELOPMENT OF NEW DESIGNS 46
      4.3.1 Shear-Mode Quartz Resonance Technology 46
      4.3.2 Ultrasonic Technology 46
      4.3.3 Variable Reluctance or Eddy-Current Technology 46
      4.3.4 Silicon Technology 47
      4.3.5 Fiber-Optic Technology 47
      4.3.6 Nonquartz Resonant Structure Technology 48
   4.4 TECHNOLOGIES FOR LONG-TERM SOLUTIONS 48
   4.5 SUMMARY 49
   4.6 REFERENCES 49

5. ACKNOWLEDGMENTS 50

BIBLIOGRAPHY Bib-1

APPENDIX A: CONVENTIONAL PRESSURE TRANSMITTER EXAMPLES . . A-1

APPENDIX B: INNOVATIVE PRESSURE GAUGE CONCEPTS B-1

APPENDIX C: PATENT SEARCH C-1

LIST OF TABLES

Table 2.1. EPRI pressure sensor acceptance criteria 3

Table 2.2. EPRI pressure sensor [A] acceptance criteria—expanded form 5

Table 2.3. Keywords for preliminary literature search 13

Table 2.4. Search based on pressure titles and descriptors plus modifiers with up to three intervening words 14

Table 2.5. Search based on pressure titles only plus modifiers with no intervening words 14

Table 3.1. Conventional plant pressure transmitters 19

Table 3.2. Innovative pressure gauge summary 33

Table 3.3. Representative innovative pressure gauge summary 39

ABSTRACT

Advanced distributed control systems for electric power plants will require more accurate and reliable pressure gauges than those now installed. Future developments in power plant control systems are expected to use digital/optical networks rather than the analog/electric data transmission used in existing plants. Many pressure transmitters now installed use oil filling to separate process fluids from the gauge mechanism and are subject to insidious failures when the oil leaks. Testing and maintenance of pressure channels occupy a disproportionately large amount of effort to restore their accuracy and verify their operability. These and similar concerns have prompted an assessment of a broad spectrum of sensor technologies to aid in selecting the most likely candidates for adaptation to power plant applications. Ten representative conventional and thirty innovational pressure sensors are described and compared. Particular emphasis is focused on two categories: silicon-integrated pressure sensors and fiber-optic sensors, and both of these categories are discussed in detail. Additional attractive concepts include variable reluctance gauges and resonant structure gauges that may not require oil buffering from the process fluid.

1. INTRODUCTION

1.1 PROBLEM STATEMENT

Analog instruments, including pressure and differential pressure (dP) sensors, are used as the primary means of measurement in all process industries, including fossil and nuclear power plants. Existing sensor techniques use numerous active components to convert a process pressure input to an output signal. Pressure and dP sensors utilize differential capacitance, strain gauge, force balance, or bourdon tube technology to convert process pressures to proportional 4- to 20-mA signals.

Starting in the late 1980s, analog centralized control systems were being replaced by digital distributed control systems (DCS). The accuracies of the conventional analog instrumentation are of the same order of magnitude as typical analog control systems (~2–3% uncertainty). However, DCS can provide improved process regulation to <0.25% uncertainty. The DCS designs require that instrument accuracies improve significantly to make the control system improvements possible, but this has not been accomplished to date. The basic signal inputs to such systems as boiler and turbine controls in fossil plants do not meet the new accuracy requirements of DCS. In nuclear plants, extensive calibration is required to meet system accuracy requirements. These procedures substantially affect operations and maintenance (O&M) costs and plant performance.

Many of the most commonly used pressure sensors have failure modes that could significantly affect the ability of any control system to adequately control plant processes. These insidious failure modes significantly alter the operability of the sensors and are not observable during steady state conditions. One failure mode, the loss of fill fluid (oil) from an oil-filled sensor, significantly increases its response time and may limit its dynamic range.[1] Background information for this oil loss problem is described in a series of symposia, reports, and journal articles over the past four years.[2-6] Most pressure sensors now installed in power plants have an age-related degradation (drift) inherent in their design. Smart microprocessors cannot compensate for these basic deficiencies in the sensors because the smart electronics do not test for leaks, measure response time, or perform self-calibrations.

Additionally, power plant O&M costs have been rising at an alarming rate for both fossil and nuclear plants. A significant portion of this O&M cost is due to instrument surveillance and testing, including calibration and response time verification. Improved sensor design and smart signal processors could substantially reduce these costs.

1.2 OBJECTIVE AND SCOPE OF INVESTIGATION

This document is the final report on Phase 1 of a three-phase project that has the overall objective of identifying and assessing improved pressure-sensing concepts for both nuclear and fossil-fueled commercial power plants. These improvements include improved reliability, stability, and accuracy; compatibility with operating environments; self-calibration and condition monitoring capabilities; extension of the operating system life span; and reduction of operating and maintenance costs.

The overall three-phase project scope includes an evaluation of new sensor technology that may be used in power plants for gage pressure and for differential pressures used in flow and level measurements. Sensors (pressure gauges), fluid-filled capillaries, transmitters, and signal processors—the entire signal channel—are included. Testing and maintenance

requirements are considered in evaluating the acceptability of new technologies. Effects of radiation and normal operating and postaccident environmental conditions on the accuracy and reliability of the pressure channels are addressed; and recommendations for hardening of selected sensors and signal processors are presented. The possible effects of electromagnetic interference (EMI) and radio-frequency interference (RFI) on measurement channel performance are addressed.

In Phase 1, the technical literature was thoroughly searched for relevant published technologies. Concepts for advanced pressure sensing have been sought from laboratory and industrial personnel, and particular attention has been given to novel and unexplored pressure measurement concepts and those concepts that have been used to improve other process variable instruments. This report includes a matrix of applicable technologies against the desired acceptance criteria, including evaluation of perceived limitations of the new technologies and the efforts required to correct or circumvent these limitations. The questions of amenability of the new technologies to retrofitting in existing plants and the impacts on new plant designs are addressed. The report recommends those development and qualification efforts that should be supported under Phases 2 and 3 of the pressure instrument improvement program.

1.3 REFERENCES

1. J. Weiss, "Slow Oil Loss in Pressure Transmitters," InTech, pp. 40–43 (October 1992).

2. J. M. Weiss and R. L. Shepard, "Evaluation of Advanced Pressure Sensor Technology," 8th Power Plant Dynamics, Control, & Testing Symposium, May 27–29, 1992, Knoxville, Tennessee; Second International Joint ISA/EPRI Controls and Instrumentation Conference, June 3–5, 1992, Kansas City, Missouri.

3. J. M. Weiss, C. Mayo, and V. Swisher, "Justification of Response Time Testing Requirements for Pressure and Differential Pressure Sensors," *Proceedings of the Thirty-Fourth Power Instrumentation Symposium, St. Petersburg, Fla., June 3–5, 1991,* Vol. 34, pp. 271–73.

4. H. M. Hashemian and K. M. Petersen, "Response Time Testing of Pressure Transmitters in Nuclear Power Plants," 1st Annual ISA/EPRI Joint Controls and Automation Conference, St. Petersburg, Florida, June 3–5, 1991.

5. V. I. Swisher, C. W. Mayo, and J. M. Weiss, *Investigation of Response Time Testing Requirements*, EPRI NP-72453, Electric Power Research Institute, May 1991.

6. H. M. Hashemian, K. M. Petersen, R. E. Fain, and J. J. Gingrich, *Effect of Aging on Response Time of Nuclear Plant Pressure Sensors, Phase I Report*, NUREG/CR-5383, Analysis and Measurement Services Corp., June 1989.

2. APPROACH

2.1 REQUIREMENTS AND SPECIFICATIONS

A list of acceptance criteria for advanced pressure sensors was provided by the Electric Power Research Institute (EPRI) early in the program. These criteria were reviewed and interpreted by Oak Ridge National Laboratory (ORNL) and accepted as guides for assessing potential development candidates. These criteria are listed in Table 2.1. The criteria were used as a basis for a request for proposal (RFP) (EPRI RFP 3462) issued in mid-year 1992.

Table 2.1. EPRI pressure sensor acceptance criteria

Stability	<0.05% of full-scale indication (FSI)
Drift	<0.05% change of FSI over 36 months
Accuracy	±0.1% of FSI
Repeatability	±0.1% of FSI
Hysteresis	±0.05% of FSI
Response time	<100 ms
Dead band (pressure channel)	<±0.01% of FSI
Temperature compensation	<±0.1% of FSI
Operating range	0–3500 psig (gage) or 0–1000 in. water (differential), with various models to cover portions of the full operating range
Overpressure protection	>150% of rated span (gage); >1000% of rated span, and >150 psid (differential)
Maintenance capability	Sensor should be operable and meet the requirements of this specification without need for scheduled or corrective maintenance for a minimum of 18 months without scheduled or corrective maintenance
On-line calibration capability	Provide means for determining the accuracy of the gauge at a minimum of one pressure in addition to the null or zero condition, without removing it from service
Sealed unit/process boundary	No elastomeric O-rings or gaskets are to be used in the pressure gauge/process interface
Failure mode detectability	All failure and degradation modes are detectable
Cost (sensor)	<$1000 per sensor
Environmental qualification	>10-year qualified life in harsh (IEEE 323)(nuclear only), and >40-year life in benign environments, with a 95% confidence limit

Table 2.1 (continued)

EMI/RFI immunity	The pressure signal error shall not exceed the accuracy limits due radio-frequency interference immunity to the presence of a radiated electric field of 10 V/m over a frequency range of 10 kHz to 1 GHz
Power supply requirements	110 VAC 60 Hz or ±24 VDC, and require not more than 150 mW per sensor and 1000 W for a signal processor
Output signal requirements	Analog electric output signals shall be 4 to 20 mA carried on two wires; digital output signals shall meet the requirements of FIELDBUS-50, per ISA SP-50
Smart capability	The sensor/signal processor shall have some identifiable inherent capability for signal verification, fault analysis (self-diagnostics), or self-calibration
Measurement principle	The gauge and signal processor shall provide a direct rather than an inferred measurement of the process pressure
Temperature limits on sensor	Upper ambient temperature limit >150°F.
Compatibility	The portions of the compatibility gauge wetted by the process fluid shall resist chemical attack at the normal process operating pressures, temperatures, flow rates, and related process conditions and retain their required properties for at least 40 years
State of development	The pertinent pressure-sensing technology has been developed and implemented in prototype devices
Sensor size (footprint)	The sensor should be no larger and no heavier than existing sensor designs
Acceleration and vibration	The sensor or signal processor shall be provided with inherent features or filters to prevent acceleration or vibration of the sensor from degrading its accuracy, response, or reliability
Pressure cycling	The sensor shall survive at least 10,000 cycles of zero to full-scale pressure cycling during its 40-year life without failure under the normal environmental and process conditions of the intended application

Since the precise meanings of some of the characteristics were thought to be subject to differences in interpretation, an expanded form of the acceptance criteria was prepared that attempts to define each term, state the acceptance requirements, and provide some additional interpretation. This expanded material is presented in Table 2.2. Six references[1-6] were consulted in obtaining the most appropriate definition(s) of the terms listed. Substantial disagreement was noted among the references for even the simplest terms.

Table 2.2. EPRI pressure sensor [A] acceptance criteria—expanded form

Stability
definition: Ability of an instrument to retain its performance throughout its specified operating and storage life.[1,2] Dynamic stability—the ability to recover promptly and completely from a transient—is related to response time.
requirement: 0.05% of full-scale indication [B].
interpretation: Stability is interpreted to be the instrument's continuing ability to provide consistent indications of pressure, within some statistical limits. Drift is interpreted as long-term changes in calibration and is an indication of instability.

Drift
definition: Drift is an undesired variation in output over a period of time. This variation is unrelated to input, operating conditions, or load.[3]
requirement: <0.05% change of full-scale indication over 36 months.
interpretation: The pressure indication shall change less than 0.05% of its full-scale reading after the gauge has been operated at a fixed, variable, or cyclic level in its normal operating range for at least 36 months, and is then subjected to the same reference pressure as was measured initially.

Accuracy
definition: The degree of agreement of individual or average measurements obtained with a particular instrument with an accepted reference value or level or with the true value of the magnitude of the quantity measured.[2]
requirement: Less than ±0.1% of full-scale indication.
interpretation: The pressure indication shall not disagree with the "true" pressure by more than ±0.1% of the maximum operating range of the process for which the gauge was selected, independent of other changes in the process or environmental conditions such as process fluid temperature or flow rate, environmental temperature, atmospheric pressure, etc.

Repeatability
definition: A measure of the variability (precision) of results obtained by the same operator using the same instrument in successive measurements of a constant measured parameter.[2] The capability of an instrument to generate a measurement signal the magnitude of which will stay within the stated limits of repeatability under identical process conditions.[3]
requirement: ±0.1% of full-scale indication.
interpretation: Repeatability is distinct from reproducibility, which is the capability of a second instrument operated by another person to obtain the same value for the same measured property.

Hysteresis
definition: The maximum difference in signal output at a given value of the input variable observed when the input value is approached from zero and when the input value is approached from full scale.
requirement: ±0.05% of full-scale indication.
interpretation: Readings of a particular true pressure taken from ascending and descending measurements shall not differ by more than 0.05% full-scale indication (half the accuracy requirement). The hysteresis limit must necessarily be smaller than the accuracy limit or drift restriction.

Response time
definition: The time required for the change in pressure indication to reach 63% of the change in steady-state pressure after a relatively instantaneous change of the pressure in the chamber[2] or the

difference between the time that a process undergoing an unterminated ramp increases or decreases to a certain value and the time at which the instrument indicates that value.
requirement: <100 ms.
interpretation: This requirement is applicable to pressure gauges that have first-order responses but may require additional interpretation for higher-ordered, undamped ("ringing") systems, where "settling time" might be more appropriate. See also ANSI/ISA-S51.1 (Ref. 1) definitions for "response, time" and "time constant."

Dead band
definition: The maximum value by which a monitored pressure can change from an initial value without initiating any statistically significant change in the pressure indication.
requirement: $<\pm 0.01\%$ of the full-scale indication.
interpretation: Pressure gauges that are mechanically linked may have clearances that must be taken up before a change in sensing signal is generated. It is understood that the pressure input is changing slowly so that dead band will not include response time effects. Pressure sensors whose dynamic responses are not simple first-order responses may appear to have dead times in their initial responses to pressure transients. This requirement addresses only the first of these two possibilities. If the measured pressure changes by as much as $\pm 0.01\%$ of the operating pressure, the gauge must show some indication of a change in that direction, but is not required to meet the accuracy requirements of 0.05% initially until the pressure stabilizes at some new pressure.

Temperature compensation
definition: Special construction, supplemental devices, circuits, or materials incorporated into the sensor or signal processor to minimize or estimate errors due to variations in temperature (adapted from definition of "compensation" in Ref. 1).
requirement: Passive compensation to achieve a pressure accuracy of $<\pm 0.1\%$ of full-scale indication, independent of ambient or process temperature variations covering the entire range of temperatures for which the gauge is qualified.
interpretation: Devices would be acceptable if they do not require off-line recalculation of the indicated pressure based on some ancillary measurement of the gage or process temperature. Such "passive" compensation could be achieved by real-time digital or analog signal processing, by design features that produce a compensating change in pressure indication for a temperature change, or by devices whose pressure indications are characteristically insensitive to temperature changes. The compensation must not allow temperature variations to affect the accuracy of the gauge by more than the required accuracy.

Operating range
definition: The range of measured pressures over which the instrument will meet all performance specifications (ASTM).[2]
requirements: Up to 0–3500 psig (for gage pressure transducers) and up to 0–1000 in. water (for differential pressure transducers).
interpretation: It is expected that gauges that were capable of meeting these limits would be produced for smaller pressure ranges without essential modifications of design features, such as 0–150 psig and 0–30 in. water differential.

Overpressure protection (gage pressure transducers)
definition: Design features that prevent distortion, damage, failure [C], degradation, or significant changes in pressure indication or response time when the gauge is subjected to pressures in excess of their rated pressures.
requirement: $>+150\%$ of full-scale indication.
interpretation: The gauge should not be affected irreversibly by subjecting the sensor to pressures up to 150% of the full-scale indication (i.e., a 50% overpressure) for brief or extended periods of time,

Table 2.2 (continued)

at some moderate rate of increase of pressure. The gauge is not required to meet accuracy and response requirements at pressures in excess of its stated operating range.

Overpressure protection (differential pressure transducers)
definition: Design features that prevent distortion, damage, failure, degradation, or significant changes in pressure indication or response time when a differential gauge is subjected to pressures in excess of their rated pressures.
requirement: >+1000% of rated differential pressure span and >150 psig.
interpretation: The gauge should not only not be affected irreversibly by subjecting the sensor and/or signal processor to differential pressures up to 10 times the rated span but should also not be damaged by inadvertent application of the entire unopposed process pressure to one side of the gauge for brief or extended periods of time. This condition could occur inadvertently in some flow measuring applications. Consideration should be given to the rate of increase of pressure to exclude sonic effects. The gauge is not required to meet accuracy and response requirements at pressures in excess of the stated operating range.

Maintenance capability
definition: Features in the design of the pressure gauge or signal processor that minimize the need for routine maintenance, that allow for maintenance to be performed without removing the gauge from the process, or that permit maintenance to be performed on-line during normal operation of the process being monitored.
requirement: A suitable pressure gauge should be operable and meet the requirements of this specification without need for scheduled or corrective maintenance under conditions found in a typical electric power plant for a minimum of 18 months.
interpretation: The gauge design should be subjected to a failure mode effects analysis (FMEA) that provides assurance at a 95% confidence level that the gauge will not fail or require maintenance during an 18-month period under conditions of the application for which it is intended. If corrective maintenance is required after an 18-month interval to allow the gauge to achieve a 40-year life, some requalification may be required (see **Environmental qualification**).

On-line calibration capability
definition: Provision in the design of a pressure gauge and/or signal processor for calibration without removal from service.
requirement: The gauge system shall provide means for determining on-line the accuracy of the gauge at a minimum of one pressure in addition to the null or zero condition, without removing the gauge from service and during normal process operation.
interpretation: Devices would be acceptable if they (1) are intrinsically capable of in-situ on-line calibration, (2) have been provided with ancillary features that allow for such calibration, or (3) have diverse means for pressure determination incorporated in their structure. These provisions should allow calibration to be performed on-line (during normal operation), in-situ (without removing the gauge from the process) to within the accuracy of the original specification. A calibration should be possible at the normal operating pressure of the gauge in service and at the null point achieved by bypassing the gauge or under shutdown conditions. If possible, additional points should be used to determine whether the characteristic shape of the pressure response curve has changed.

Sealed unit/process boundary
definition: Process boundary—All surfaces that are topologically equivalent to the interior surface of the process system, including any joints or seals in these surfaces.

Table 2.2 (continued)

requirement: No elastomeric O-rings or gaskets are to be used at the pressure gauge/process pressure interface that would allow leakage through the boundary that could affect the accuracy or response of the gauge.
interpretation: In conventional force balance gauges, leakage between the process and the reference pressure volume in the gauge can affect the pressure reading insidiously, that is, without the effect being noticeable. Eliminating elastomeric O-rings and gaskets could avoid this failure mode but might affect the design adversely in other respects such as requiring excessive maintenance. Consideration will be given to the use of metallic gaskets at critical boundaries if required for on-line maintenance but only if provision is made for independent verification of the integrity of these seals. Use of O-rings and gaskets that do not affect gauge performance is permitted.

Failure mode detectability
definition: Features or provisions of a sensor or signal processor design that allow operational status, failure [C], or degradation to be detected without removal from service.
requirement: All failure and degradation modes are detectable.
interpretation: The intention of this specification is to provide a gauge system that shows obvious indications of any failure or degradation and that allows on-line diagnostics, calibration, or response time testing. It should be possible to determine whether the gauge performance has or has not changed. This requirement permits scheduled maintenance to be replaced by corrective maintenance.

Cost (sensor)
requirement: Cost < $1000 per sensor.
interpretation: It is intended that large numbers (thousands) of sensors designed to these specifications will be purchased and installed in electric power plants and that the price level will become substantially less than the stated requirement. The cost of the gauge should not include the additional expense incurred in qualifying the gauge to meet nuclear standards and requirements, which may increase the cost of the gauge to the utility by factors of 10–100.

Cost (channel)
requirement: As low as possible and practical.
interpretation: The cost of the signal processor and balance of channel instrumentation, which could substantially exceed the cost of the sensor, will depend on whether more than one gauge can be operated from a single signal processor, whether the output signals are to be multiplexed or transmitted directly, and whether the processor/transmitter is required to meet additional (nuclear) specifications.

Environmental qualification
definition: The procedure(s) by which it is determined that a sensor and signal processor can be expected to operate properly when it is installed and used in a particular industrial environment.
requirement: >10-year qualified life in harsh environments [per IEEE 323 (Ref. 4)] and >40-year life in benign environments at a 95% confidence level.
interpretation: The qualified life is that time in which the gauge system meets these requirements for accuracy, response, etc., in a harsh or benign industrial environment. To qualify a gauge, signal processor, or channel, a sufficient number of units must be subjected to the specific environmental conditions singly or in combinations of conditions for significant periods of time so that an estimate can be made of their failure probability. Hence, their mean time to failure (MTTF) must exceed the number of years specified above, allowing some reasonable statistical uncertainty. Units are required to meet this specification, without scheduled maintenance. Corrective maintenance may be performed

Table 2.2 (continued)

at intervals >18 months (see **Maintenance capability**) to provide the required life, but the units may require requalification after certain types of maintenance procedures.

Electromagnetic interference/radio-frequency interference (EMI/RFI) immunity
definition: The pressure channel output signal shall not be biased (dc level) by the presence of electromagnetic or radio frequency fields at the sensor or signal processor locations or the cables connecting them. Also, the EMI and RFI fields shall not cause the signal to be obscured by the ac noise so that the sensor cannot meet the accuracy requirements at the lowest end of the measurement range.
requirement: The pressure signal error shall be within the accuracy limits due to the presence of a radiated electric field of 10 V/m over a frequency range of 10 kHz to 1 GHz, and pressure signals shall not be lost in induced ac signal noise at the low end of the gauge range.
interpretation: For some sensors and gauges, this is a nonissue; for others, it may be important to determine the actual levels (field strengths) and immunity levels (percentage change of reading) to be allowed. Equivalent specifications are found in SAMA PMC-33.1 (1978) Electromagnetic Susceptibility of Process Instruments, MIL Std 462 Test Method RSO-3, and MIL Std 461-C Test Requirements.

Power supply requirements
definition: The power voltage, wattage, and frequency required to operate the sensor and signal processor.
requirement: The sensor and signal processor shall be operable from typical industrial plant services of nominally 110 VAC 60 Hz or ±24 VDC and require not more than 150 mW per sensor and 1000 W for a signal processor. If special power conditioning is needed to meet accuracy or other performance requirements, such provisions shall be incorporated into the signal processor.
interpretation: See ANSI/ISA S 50.1 (Ref. 5).

Output signal requirements
definition: The output signal requirements are those characteristics that the output signals from a signal processor must have that allow these signals to be compatible with conventional displays or controllers, whether the signals are analog or digital, electrical, optical, pneumatic, or of another type.
requirement: Analog electric output signals shall be 4- to 20-mA dc carried on two wires; digital output signals shall meet the requirements of FIELDBUS-50 (see ISA-S50.1).
interpretation: Some provision may be incorporated to alter the output signal to 0–100 mV or other ranges or to provide analog, digital, or optical output options by exchanging cards in the signal processor. Unless specified otherwise, the 4- to 20-mA option will be supplied for analog electrical outputs. If the system is designed for electric or optical multiplexing, the 4- to 20-mA requirement or equivalent will pertain to the output of the demultiplexer. Digital, optical, pulse code, amplitude, phase, frequency coded, fringe counting, and other outputs that are not degraded by signal transmission may be acceptable if they can be ultimately converted to conventional control signals.

Smart capability
definition: Features of the pressure gauge and/or a signal processor that augment normal functions by providing signal validation, compensation, range adjustment, diversity, diagnostics, degradation or failure indication, prognosis, or other attributes.
requirement: The sensor/signal processor shall have some identifiable inherent capability for, for example, signal verification, fault analysis (self-diagnostics), or self-calibration.
interpretation: This criterion permits ancillary means for diagnostics that can be used on-line and automatically. Signal processor features could include self-calibration, autorange changing, variable

Table 2.2 (continued)

damping, zero and range adjustment, range expansion, reasonableness checks, diagnostics such as signal noise signatures, or other provisions produced automatically or on demand.

Measurement principle
definition: The fundamental function(s) by which a process pressure is converted to a quantitative signal that can be transmitted and displayed.
requirement: The gauge and signal processor shall provide a direct rather than an inferred measurement of the process pressure.
interpretation: It is desirable that the measurement principles be identified as intrusive or nonintrusive, that is, whether the pressure gauge sensor is directly immersed in a process fluid or separated from the fluid with a diaphragm or some force transmitter. Pressure sensing that uses measurements of other process parameters to infer process pressure are not to be considered (e.g., use of steam temperature to infer pressure).

Temperature limits on sensor
definition: The range of environmental temperatures to which the pressure gauge and signal processor may be subjected without exceeding operating specifications.
requirement: Upper ambient temperature limit >150°F. Upper process temperature limit >1100°F.
interpretation: It is understood that the pressure sensor will not necessarily be directly exposed to the process temperature in most applications. The sensor and signal processor should meet the stated environmental temperature limits requirement. In some pressure sensor designs, portions of the sensor are exposed directly to the process fluid. In the intended applications for electric power generating plants, process fluid temperatures may range from 600°F (350°C) in light water nuclear plants to at least 1100°F (650°C) in high-efficiency fossil or advanced nuclear generating plants. Such directly immersed pressure sensor designs that have these extended capabilities should be identified (see **Temperature compensation**).

Compatibility
definition: Capability of the materials of the process boundary of the sensor to resist chemical attack by the process fluid.
requirement: The portions of the sensor wetted by the process fluid shall resist aqueous (water or steam plus solutes) chemical attack at normal process operating pressures, temperatures, flow rates, and related process conditions and retain their required properties for at least 40 years.
interpretation: The materials of pressure gauge must resist attack by the process fluid, specifically the gauge structures that are in direct contact with the fluid. Fluids include aqueous media—water or steam and mixed phases—that may contain various solutes (chlorine ions, borates, etc.). Sensitive portions of the gauge may be isolated from the process by diaphragms or capillaries to prevent attack on sensitive portions of the gauge, possibly at the loss of some response or sensitivity.

State of development
definition: The identification of the stage of development, proof of principle, testing, qualification, and commercialization of the technologies on which a gauge concept depend.
requirement: The basis for and the assessment of the degree to which the technology has progressed shall be stated.
interpretation: The assessment of an innovative pressure sensor design should include any impediments to developing a suitable source of supply. These might be undemonstrated principles, additional equipment needed for gauge operation that is not available, patent or proprietary issues, materials that are not readily available, or other deterrents that have not been identified in the specifications.

Table 2.2 (continued)

Sensor size (footprint)
definition: The projected area required to install the pressure sensor on a pipe or vessel wall and the clearance needed between the sensor and adjacent structures or components.
requirement: The general requirement is that the sensor should be no larger than existing sensor designs.
interpretation: A quantitative estimate is to be provided of a typical "footprint" or the space required to attach the sensor to the process. This footprint may be as small as the diameter of a capillary tube or as large as a pneumatic gauge head. The requirement leaves a wide latitude and is provided as an advisory requirement.

Acceleration and vibration
definition: Transient or oscillatory mechanical, hydraulic, or acoustic forces that impinge on the pressure gauge, caused by fluid flow; pump operation; and other continuous, normal sources inherent in the plant or process.
requirement: The sensor or signal processor shall be provided with inherent features or filters to prevent acceleration or vibration of the sensor from degrading accuracy, response time, and reliability, or catastrophic failure [D].
interpretation: This requirement does not deal with seismic events or accident conditions. In some nuclear power plant applications, additional requirements for seismic, separation (IE), diversity, redundancy, postaccident monitoring, and others would be added to the requirements stated in this specification. This specification is concerned with any induced oscillatory vibrational noise or impulse response that would limit gauge accuracy and with the durability of the gauge structure. Specific requirements are given in note D.

Pressure cycling
definition: Operation of pressure sensors under repeated changes of input pressure from process shutdown to full-operation conditions.
requirement: The sensor shall survive at least 10,000 cycles of zero to full-scale pressure cycling during its 40-year life without failure or degradation under the normal environmental and process conditions of the intended application.
interpretation: This requirement differs from the acceleration and vibration requirement in that large pressure excursions are presumed (zero to full scale). Both degradation and failure [C] are consequences to be avoided. The cycling requirement is concurrent with the long-term drift requirement.

Notes and Terminology for Table 2.2

[A] **Pressure sensor** refers to a basic device that includes a diaphragm, bellows, or bourdon tube that is in contact with the process fluid and strain or deflection measuring devices but not with the circuitry needed to convert strain-produced resistance changes to a change in electrical current, or the equivalent devices in other forms of pressure-measuring apparatus.

Pressure transducer includes the functions of the sensor and in addition, a **signal processor** or means for converting the change in pressure to a change in an electrical, hydraulic, pneumatic, or optical quantity that can be quantified over a range of values.

Pressure switch is equivalent to a pressure transducer except that the change in pressure is converted to a bistable quantity that is either 'on' or 'off'.

Table 2.2 (continued)

Pressure transmitter is a pressure transducer to which are added the power supply, temperature compensation, and output signal conditioning so that a signal can be transmitted to a remote pressure indicator or process controller.

Pressure gauge is a generic term that denotes a device that measures pressure, which might include manometers, dead weight testers, mechanical gauges, and any other direct means for measuring pressure.

[B] The term **"operating range"** listed in the original Criteria has been replaced with **"full-scale indication"** to accommodate some variations in gauge design, range designations, and scale indications. In a typical gage pressure application, the gauge will have a zero indication at one atmosphere of process pressure and will be constructed and its scale graduated to read some maximum pressure such as 400 psig. This gauge can then be said to have a 400-psi operating range. The criteria require that its stability, drift, accuracy, and repeatability be some percentage of the full-scale indication or of 400 psig. Other gauges, including those of the same basic construction, may be graduated to measure gage pressures from 200 to 300 psig, with a suppressed zero and a limited upper-range indication. This gauge has an operating range of 100 psi. This gauge would be required to meet the criteria based on a percentage of 300 psi, not of 100 psi. Differential pressure gauges may be graduated to read from 0 to 100 in. water, and their accuracy would be based on a percentage of 100 in. water. Gauges of the same construction but graduated to read from 0 to 10 in. water would meet criteria based on 10 in. water.

[C] **Failure** is defined as complete and obvious loss of function, sometimes referred to as catastrophic failure.

Degradation is defined as a change in characteristics that no longer meet the requirements of this specification or the installed application. Degradation may not be immediately obvious.

[D] **Vibration and Acceleration** requirements shall be based on methods described in MIL STD-202F, "Test Methods for Electronic and Electrical Component Parts," and the requirements listed as Table 3 "Vibration Test Parameters" in ASTM E 1137, "Standard Specification for Industrial Platinum Resistance Thermometers," which requires testing at double amplitude of 0.05 in. (3 g's peak) over a frequency range of 5 to 500 Hz for 3 h at each of three axes, including 30 min at each resonant frequency.

Although these efforts attempt to be definitive, it is clear that the terms "stability," "drift," and "repeatability" are somewhat commingled, as are other terms. It is also apparent that not all of these criteria can be met in any given gage or pressure measuring system and, to that extent, represent desirable development objectives rather than firm specifications.

2.2 SCIENTIFIC LITERATURE AND PATENT SEARCH

An extensive literature search for new pressure-measuring concepts and for little-known (or little-recognized) physical effects that may permit development of effective new sensors was completed. Pressure-measuring concepts of particular interest in the search were those based on fiber-optic and advanced silicon technologies.

A preliminary search was performed in the 14 databases judged most appropriate among those available from the ORNL Central Research Library's Dialindex™ service. To obtain some idea of how many possible references might be available to us, we searched for only the number of references containing the following keywords and modifiers in their titles and descriptors and found the extremely large number of potential items indicated in Table 2.3.

Table 2.3. Keywords for preliminary literature search

Search parameters[a]	Total references
Pressure/TI,DE	556,013
Sensing/TI,DE	80,834
Sensor?/TI,DE	179,551
Detect?/TI,DE	558,076
Measure?/TI,DE	981,302
Transducer/TI,DE	41,448
Pressure(3N)(Sensing or sensor? or detect? or measure? or transducer)/TI,DE	41,195

[a]DE = Descriptors.
TI = Title.

As noted above, the search fields in each database were the titles (TIs) and the abstractor's descriptors (DEs) for the references. The search objects were titles and descriptors containing the indicated keyword and, in the case of the final search, the keyword in conjunction with any one or more of the listed words as modifiers, with no more than three intervening words (3N) between the keyword and the modifier.

The search with the modifiers [Pressure(3N) (sensing or sensor? or detect? or measure? or transducer)/TI,DE] was evaluated as the most significant, and the numbers of potential sources (Table 2.4) were obtained from the separate databases.

In an attempt to reduce the file to a manageable number of truly significant references, the search was tightened on five of the most appropriate databases by eliminating the descriptor from the search and by requiring that any modifier be contiguous with the keyword, rather than allowing up to three intervening words. This more restrictive search significantly reduced the numbers of selected files (and, we believe, enhanced the potential significance of each as shown below). The Derwent World Patents Index was further refined by limiting the language to English with the very dramatic reduction in the number of calls shown in Table 2.5.

Title lists were printed out for the potential sources from the databases from both tables above marked with an asterisk (*) and were analyzed to select references for further investigation. As an example of the productivity of this approach, analysis of the Derwent World Patents Index printout produced 10% of the titles worthy of further investigation. Abstracts were printed out and reviewed for the most promising titles identified by the search, and journal article copies were obtained for those evaluated as most applicable. These selected articles form the bulk of the references listed in the report. See Appendix C for abstracts of the 42 references selected from the Derwent World Patent Index.

Table 2.4. Search based on pressure titles and descriptors plus modifiers with up to three intervening words

Data base	Potential sources
IEE publications	5176
Compendex plus 1970–1991 (Engineering)	6620
National Technical Information Service	4033
Chemical Engineering & Biotechnology Abstracts 1971–1991*	253
Current Technology Index 1981–1991*	65
Electric Power Data Base 1972–1991*	12
Energy Science & Technology 1983–1991	6364
Japan Technology 1985–1991	434
Conference Papers Index 1973–1991	730
Derwent World Patents Index 1981–1991	11502
Scisearch 1974–1991	5147
ABI/Inform 1971–1991	2
PTS Promt 1972–1991	747
Trade and Industry Index 1981–1991*	80

Table 2.5. Search based on pressure titles only plus modifiers with no intervening words

Data base	Potential sources
IEE Publications*	1811 (vs 5176)
Compendex plus 1970–1991 (Engineering)*	1388 (vs 6620)
National Technical Information Service*	863 (vs 4033)
Conference Papers Index 1973–1991*	432 (vs 720)
Derwent World Patents Index 1981–1991*	423 (vs 11502)

Finding

This search provides the information resources necessary to examine the state of the art in pressure-sensing concepts and early developmental approaches.

2.3 COMMERCIAL LITERATURE SEARCH

Potential commercial sources for appropriate pressure transducers and applicable technologies were identified from personal experience, reviews of nuclear power publications, instrumentation trade magazines, buyers guides, etc. A large volume of technical material, applications data, and catalogs was collected through queries to companies thus identified. Some existing commercial techniques and products offer promising possibilities for development programs leading to a new generation of pressure transducers for nuclear and fossil-fueled power plants. These devices are evaluated in the body of this report.

Almost all of the information reported in the summaries and abstracts presented in this report were obtained from manufacturers' or vendors' literature, either directly or through published reports in trade journals. The form and terminology of specifications provided by the vendors differ so widely that is extremely difficult to make relative evaluations.

No technical data were produced by tests of pressure gauges at ORNL for inclusion in this report.

Finding

This search established the state of the art in technologically mature, currently available pressure sensors.

2.4 SPECIFICATION MATRIX

A matrix was prepared for listing the published characteristics of two sets of selected pressure gauges. The first set was a group of six commercially obtainable, conventional pressure transmitters, comparable to and including the Rosemount Model 1151 and 1154 capacitative sensors that are discussed in Sect. 3. The second set of selections consists of 29 different pressure gauges grouped into nine classes according to basic principle of operation, also discussed in Sect. 3. Almost all the information entered into these matrices were taken from commercial publications provided by the manufacturer, with some additional information from trade journals and scientific reports. Not all the information to fill out the matrices were available in most cases, and sometimes it was difficult to associate published data with the intended descriptions of the matrix headings. Generally, the manufacturer was given the benefit of any doubts.

2.5 EVALUATION AND SELECTION PROCESS

The information in the specification matrix and in other printed materials provided by the manufacturer was compared. The full matrix (Table 3.2 in Sect. 3) of innovational sensors was reduced to a more manageable summary matrix. An 11-item selection of representative innovational pressure gauge types is shown in Table 3.3 in Sect. 3. In this subsidiary matrix, where the characteristics of the particular pressure gauge were clearly superior to the characteristics of the conventional gauges, that item was given a plus mark (+); where they were essentially equivalent, the item was given a check mark (√); where they were clearly inferior, the item was given a minus mark (−). Where no information was listed, the item was given an X or a question mark (?) that did not enter into its rating. The net number of pluses and minuses for the six conventional gauges was used to order the ratings of the six gauges.

In the 11-item matrix of innovative gauges (Table 3.3 in Sect. 3), additional factors were considered by attempting to assess the difficulty and likelihood of developing a gauge suitable for electric power plants and the potential benefits of doing so. The relative number of pluses and minuses and a rating scale of risks and benefits were combined to give an ordered numerical rating for these potential developments. Admittedly subjective, the ratings indicate our assessment of relative values of conventional gauges and relative possibilities for developmental gauges.

2.6 REFERENCES

1. *Process Instrumentation Terminology*, Instrument Society of America ANSI/ISA - S51.1-1979.

2. *Compilation of ASTM Standard Definitions*, 7th ed., American Society for Testing and Materials, 1990.

3. B. G. Liptak, *Instrument Engineer's Handbook*, Vol. 1, Chilton Book Co., 1969.

4. *IEEE Standard for Qualifying Class IE Equipment for Nuclear Power Generating Stations*, New York, IEEE 323, Institute of Electrical and Electronic Engineers, Inc.

5. *Compatibility of Analog Signals for Electronic Industrial Process Instruments*, ANSI/ISA SP 50.1.

6. *IEEE Standard Dictionary of Electrical and Electronic Terms*, New York, ANSI/IEEE Std. 100-1988, Fourth Edition, Institute of Electrical and Electronic Engineers, Inc.

3. FINDINGS AND ASSESSMENT

3.1 COMPARISON OF EXISTING INDUSTRIAL PRODUCTS

The material in this section is presented to provide a database against which improved pressure sensing methods can be evaluated. The tables and figures describe and compare the characteristics of five fully or partially nuclear-qualified pressure transmitters and one (PS-04) nonqualified but very promising transmitter that has recently come on the market. The sensing techniques represented range from force balance devices to differential capacitance, resonant wire, and three strain gauge types. The most common characteristic across the full range of types is that all but two employ silicone oil isolation of the sensing mechanism from the process. The two nonisolated instruments are the Weed (formerly manufactured by Foxboro) force balance transmitter and a bourdon tube version of the Foxboro N-820 Series resonant wire transmitter.

Characteristics and operating principles of individual transmitters are listed in Appendix A. This selection is not intended to be exhaustive, but representative of various styles of pressure instruments used in electric power plants. In general, each manufacturer's series contains absolute, gage, and differential pressure instruments, each type with a variety of pressure ranges. The selected conventional transmitters described in Appendix A are

PS-01 Rosemount Series 1151–1154 capacitance sensors,
PS-02 ITT Barton 760 Series Bourdon tube with silicon strain-gauge sensors,
PS-03 Camille Bauer Series 32 film strain-gauge sensors,
PS-04 Honeywell ST3000 Series silicon piezoresistive sensors,
PS-05 Foxboro N-820 Series resonant wire gauges, and
PS-06 Weed Series NE-11 and -13 force balance gauges.

The characteristics of these six products are summarized in Table 3.1, which uses the evaluation criteria developed in this study; the characteristics are described further in Sect. 2. In several cases, the information to complete this table was not available in the manufacturer's literature, making the comparisons somewhat limited in scope. Often, it was necessary to interpret the manufacturer's data in the light of the definitions that we prepared for the evaluation criteria, perhaps not always in the way in which they were intended.

Nevertheless, all of the gauges show satisfactory accuracy, pressure range, overpressure tolerance, usable output signals, temperature tolerance, and environmental tolerance, to a greater or lesser degree. None provide in situ validation of calibration; most use oil filling; most can be provided as nuclear-qualified units. Some are now adding smart transmitters to the gauges to allow remote alignment and some diagnostics.

Pressure sensing in the Rosemount differential capacitance sensor and in the Foxboro resonant wire sensor is by frequency change in a resonant circuit as pressure change produces change in resonant frequency; transmitter output is analog current (4–20 or 10–50 mA).

Pressure is sensed in the Weed (formerly Foxboro) force balance transducer by measuring the current required in a coil/actuator to restore a displaced diaphragm/lever system to its null position; transmitter output is again 4- to 20-mA or 10- to 50-mA analog current. Two of the three strain gauge-based sensor types apply metal film or silicon strain gauges to mechanical flexures and provide 4- to 20- or 10- to 50-mA dc analog output. The third of the three, the Honeywell ST 3000, employs a micromachined, silicon sensor that

contains three separate sensors on a single chip: a differential pressure sensor, a static pressure sensor, and a temperature sensor; the static and temperature sensors provide improved pressure and temperature compensation and improved accuracy.

None of these commercial products provides means for in situ, on-line calibration of the pressure signal. Only one (the Weed force balance NE-10 series, PS-06) provides a method for in situ, on-line response time validation. If the balance current is turned off and then turned on, the rate of return to its equilibrium indication yields information on the gauge's time response. The response time of some of the other gauges may be validated by using process noise response, but this test method requires additional information about the repeatability of the process input noise from an independent measurement. Because changes in calibration, dynamic range, and response time are affected by loss of filling fluid, the ability to measure one of these characteristics (response time) could be beneficial in establishing that the other characteristics (calibration and range) have not changed.

Finding

Six different styles of pressure sensors are available from industrial vendors, offering satisfactory accuracy, range, response times, durability, and nuclear qualification; but those which use an oil-filled capsule to transfer pressure from the process to the sensing element are vulnerable to insidious degradation if the oil leaks, which is true at least for five of the six.

3.2 DESCRIPTIONS OF MAJOR APPLICABLE TECHNOLOGIES

3.2.1 Silicon Pressure Sensors

3.2.1.1 Introduction

In the last two decades, single-crystal and polycrystalline silicon pressure sensors produced by micromachining and integrated circuit manufacturing techniques have evolved from primitive devices with limited capabilities and a small number of specialized applications into a wide range of innovative and well-engineered pressure sensors that are rapidly replacing conventional technologies in many scientific and industrial applications. In addition to a large number of new companies devoted totally to silicon sensors, some of the old, main-line instrument companies are beginning to integrate silicon technology into their line of products (e.g., Honeywell's ST 3000 Smart Transmitter with piezoresistive pressure sensors; Foxboro's Silicon Specialty House, Foxboro/ICT, which produces a line of silicon pressure sensors; and Rosemount's new Model 2088 repairable, 0.5% accuracy, low-cost pressure transmitter, which is the first in their line to use silicon strain-gauge sensing technology instead of their acclaimed capacitive sensing). Innovation in silicon technology continues at a rapid rate, bringing new capabilities and improved performance to this class of sensors.

The two basic types of silicon pressure sensors that have been developed to the level of commercial products are capacitive sensors and piezoresistive strain-gauge sensors; however, the piezoresistive type still accounts for nearly all commercial production. The capacitive sensors are tiny (down to 100 μm on a side) capacitors with one thin plate (1 μm to tens of micrometers thick) spaced a distance of one or more micrometers from a fixed base plate. The thin plate, usually of single-crystal silicon, is the pressure sensing diaphragm that changes

Table 3.1. Conventional plant pressure transmitters[a]

Conventional plant pressure sensor acceptance criteria comparison		PS-01		PS-02			PS-03		PS-04		PS-05		PS-06	
		Rosemount		ITT Barton			Camille Bauer		Honeywell		Foxboro		Weed (Foxboro)	
		1151	1154H	763 Gage	764ΔP	765ΔP	32PGPA1	32DP1	ST3000		N-820 series		NE-11	NE-13
		Capacitance		Silicon strain gauge			Film strain gauge		Silicon	Piezoresist.	Resonant wire		Force balance	
Criteria	Specification	Nonsafety	Nucl. Qual.	Bourdon	Bellows	Bellows	Gage/abs	ΔP	Gage/abs	ΔP	Gage/abs	ΔP		
Stability	<0.05% FSI	±0.1%/6		40-year qualified design life @ 122°F			±0.2% FS/6 months				±0.1% FS			
Drift	<0.05% FSI in 36 months		±0.2% FSI/18 months	<±1% FSI/year							±0.1%/6 months		0.33%/year	0.25%/year
Accuracy/repeatability	±0.1% FSI	±0.1%	±0.25%	±0.5% FSI	±0.5% FSI	±2% FSI	±0.25% FSI	±0.2% FSI	0.08%		±0.2%/FS		±0.5 to 1.25%	
Hysteresis	±0.05% FSI			Incl.	Incl.	Incl.					±0.05% FS		0.15% FSI	0.10% FSI
Nonlinearity	± % FSI	±0.1%		Incl.	Incl.	Incl.					±0.05% FS			
Response time (sensor)	<100 ms	>200 ms	200 ms	<180 ms for 10–90% step			0.2 s/50%		250 ms		500 ms	200 ms		
Dead band (or zero pressure offset)	<±0.01% FSI	±0.25%	<±0.66%	Incl.	Incl.	Incl.								
Temperature compensation coefficient	<±0.1% FSI	±0.5%/100°F		±1.5% FSI/100°F		±2.5% FSI	±1%/100°F at FS		0.18%		±1%/100°F			
Operating range maximum	Up to 0- to 3,500-psi gage	6,000 psi	3,000 psi	3,000 psi	X	X	6,000 psi		6,000 psi		6,000 psi		6,000 psi	
minimum	psi gage			100 psi	X	X	100 psi		15 psi		10 psi		70 mm Hg	
maximum	Up to 0- to 1,000-in. w.c. differential	1,000 w.c.		X	300 psid	10-in. w.c.		800-in. w.c.	400-in. w.c.	4,500 psid		750 w.c.	2,000 psi	850-in. w.c.
minimum	in. w.c. differential	5-in. w.c.		X	100-in. w.c.	0.8-in. w.c.		16-in. w.c.	1-in. w.c.	400-in. w.c.		5	350 psi	25-in. w.c.
Overpressure protection	>150% of span (gage)	4,500 psi	4,500 psi	150% FSI	3,000 psig	1 psig		150% FSI	9,000 psi		9,000 psi		9,000 psi	3,000 psi
	>1,000% and >150 psig (differential)	2,000 psi		X	X	X	3,600 or 10,000 psi		3,000 psi	3,000 psi		6,000 psi		
Maintenance	>13,000-h interval			?	?	?					5-year warranty			
On-line calibration capability	On line, in situ	X	X	X	X	X	X	X	X	X	X	X	X	X
On-line response time verification		X	X	X	X	X	X	X	X	X	X	X	Power interrupt	
Sealed unit/process boundary	No gaskets or O-rings								Metal gasket		Gasket			
Failure mode detectability	All modes detectable	X	X	X	X	X	X	X	Yes		X	X	Yes	
Environmental qualification	>10 years in harsh environment	Yes							No				10 years @ 134°F	
Reliability (mean time to failure)	>40 years in benign environment	Yes		>40 years	>40 years	>40 years			No		35 years	35 years	20 years @ 106°F	
EMI/RFI immunity	10 V/m @ 10 kHz to 1 GHz	30 V/m		?	?	?	Yes	Yes	30 V/m		20 V/m @ 27–500 MHz			
Power supply requirements	110 VAC; ±24 VDC	12 to 45 VDC		15 to 50 VDC			24 VDC/24 mA		Yes		12.5–90 VDC			
Smart capability	Self-diagnostics	Yes		?	?	?			Yes	Yes	Yes	Yes	No	No
Output A/D/O span	4–20 mA; 0–100-mV full-scale output	Yes		4–20 or 10–50 mA			4–20 or 10–50 mA		Yes		4–20 or 10–50 mA		4–20 or 10–50 mA	
Output resolution	% FSI			±0.01% of FSI										
Measurement principle	Nonintrusive or direct	Direct	Direct	Direct	Direct	Direct	Direct	Direct	Direct	Direct	Direct	Direct	Direct	Direct

Table 3.1 (continued)

Conventional plant pressure sensor acceptance criteria comparison		PS-01		PS-02			PS-03		PS-04		PS-05		PS-06	
		Rosemount		ITT Barton			Camille Bauer		Honeywell		Foxboro		Weed (Foxboro)	
		1151	1154H	763 Gage	764ΔP	765ΔP	32PGPA1	32DP1	ST3000		N-820 series		NE-11	NE-13
		Capacitance		Silicon strain gauge			Film strain gauge		Silicon	Piezoresist.	Resonant wire		Force balance	
Criteria	Specification	Nonsafety	Nucl. Qual.	Bourdon	Bellows	Bellows	Gage/abs	ΔP	Gage/abs	ΔP	Gage/abs	ΔP		
Temperature limits (compensated)	T(E) > 150°F (environment)	185°F	200°F	320°F	320°F	320°F	85°C		70°C		180°F	180°F	0 to 80°C	
	Lower limit	-40°F	-40°F				-30°C				-40°F	-40°F		
	T(P) > 1,100°F (process)								70°C		250°F	250°F	0 to 80°C	
	Sensor								110°C					
Compatibility	40-year life								Yes					
State of development		Product	Product	Product	Product	Product	Product	Product	Product		Product	Product	Product	Product
Sensor size (footprint)	Same as existing	4.5 × 4.5 in.							5 × 8 in.		5 × 5 × 3 in.			
Acceleration and vibration	MIL STD 202	±0.05%	±0.5%/8.5 g	0.6% SSE	0.7% SSE	10.5% SSE	10 g SSE				±0.1% FS @ 3 g and 200 Hz			
Pressure cycling	10,000 cycles (0–FS) in 40 years			500,000	5,000,000	500,000			Yes					
Radiation resistance	Gamma dose (Mrad)	To 110 Mrad		200 Mrad	200 Mrad	200 Mrad	86 Mrad						150 Mrad TID	
Seismic qualified—IEEE 344		Yes		Yes	Yes	Yes	Yes	Yes	No		Yes	Yes	Yes	Yes
IEEE 323 qualified		Yes		Yes	Yes	Yes	Yes	Yes	No		No	No	Yes	Yes
Oil-filled		Yes			Yes	?	Yes	Yes	Yes	Yes	Yes	Yes	No	No

[a]A/D/O = analog/digital/optical; abs = absolute; EMI/RFI = electromagnetic inference/radio-frequency inference; FS = full scale; FSI = full-scale indication; g SSE = gravity (acceleration) for safe shutdown earthquake; MTTF = mean time to failure; Nucl. Qual. = nuclear qualified; Piezoresist. = Piezoresistive; ΔP = differential pressure; T(E) = temperature of environment; T(P) = temperature of process; TID = total integrated dose; w.c. = water column; X = no known capability; ? = insufficient information.

the capacitance of the sensor when it is deflected by pressure to change the spacing to the base plate. On- or off-chip signal conditioning circuits excite the transducer and convert the capacitance change to an electrical signal related to pressure. Piezoresistive sensors have a silicon mechanical structure much like that described for the capacitive type, except that piezoresistive strain gauges or other devices are deposited or implanted on the diaphragm. Strain gauges, which account for the vast majority of commercial sensors, are usually arranged in a four-arm Wheatstone bridge that is excited and conditioned off-chip. Other strain sensing devices are discussed below.

The two basic silicon sensor types are often extrapolated in the conception and implementation of innovative variations. These variations include such things as integration of complementary metal-oxide semiconductor (CMOS) ring oscillators on the silicon chip so that strain of the diaphragm piezoresistively alters the frequency of the ring oscillator, giving a pressure-related frequency output; another variation integrates a pair of resonant strain gauges on the silicon diaphragm and monitors the strain-induced change in resonant frequency to produce an output functionally related to pressure.

Because of the uncertain mechanical and electrical characteristics of polycrystalline silicon and the dependence of those characteristics on grain size, polycrystalline devices will not be included in this summary. Also, because of the rapid evolution of developments in this field, work reported more than five years ago will generally be deemphasized or excluded.

3.2.1.2 Capacitive silicon pressure sensors

Any capacitive pressure sensor is a variable capacitor or differential capacitor, one plate of which consists of a thin diaphragm that is deflected by the application of pressure. Silicon capacitive pressure sensors are based on a thin single-crystal or polycrystalline silicon diaphragm. They are characterized by high pressure sensitivity and markedly low temperature sensitivity. They can operate up to about 300°C and remain almost free of hysteresis. The gauge capacitances are small (generally 1–3 pF), and the sensors have a nonlinear (but well defined) response characteristic; the full scale change in capacitance can be in the range 20–200% (Refs. 1, 2).

The objective of some recent work was to produce a capacitive silicon pressure sensor optimized for a low temperature coefficient of zero shift and excellent long-term stability.[3] The sensing element is a variable-gap capacitor located between two single-crystal silicon chips, one of which contained a micromachined pressure-sensitive diaphragm. The silicon chips, as well as the pressure port tube, are sealed together by anodic bonding. No circuitry is implemented on the silicon, because the work was intended to test the characteristics of only the sensor. The thermal zero shifts (TCOs) of ten presumably identical units (the sensors were taken directly from assembly to the tests without any screening procedure) are between 0.009% and 0.012% of full-scale output (FSO) per degree Celsius. The shifts are characterized as being "quite linear and would be easily compensated." With respect to the long-term stability of the zero-pressure capacitance, after a settling time of 5–30 h it was not possible to detect any long-term drift of the zero point within the uncertainty of the measurement system, which is estimated to be 0.01% FSO.

Another developer has combined a capacitive pressure sensor chip with a standard CMOS oscillator chip to produce a sensor having resolution better than 0.01%.[4] The sensor is very stable, with hysteresis and long-term drift (>600 days) well below 0.1%. The temperature coefficient of the capacitance (C) is below 100 ppm/°C and reproducible. The

nonlinearity of C^{-1} is greater than 1% but could be approximated to better than one part in 10^4 by a fourth-order polynomial.

3.2.1.3 Piezoresistive silicon pressure sensors

Piezoresistive pressure sensors consist of silicon diaphragms on which strain gauges are either deposited or implanted. With proper placement of the strain gauges, the diaphragm acts as a stress amplifier and improves the output of the gauges. These sensors exhibit a linear response to low levels of stress. The monocrystalline silicon gauges are characterized by a pressure sensitivity two or three times greater than that of laser-recrystallized polysilicon gauges. The major problem encountered with piezoresistive sensors is their high temperature sensitivity, which has to be reduced by means of resistor compensation networks. The sensors with gauges diffused or implanted in the diaphragm should be able to operate up to 200°C, whereas deposited gauges extend the operating range up to 300°C. The comparison of normalized response data indicates that the sensitivity to pressure of piezoresistive sensors is less than that of capacitive sensors.

Recent development work at Lucas NovaSensor has produced a unique silicon fusion bonding technique that allows production of ultrastable, high-temperature pressure sensors[5] and sensors capable of withstanding at least 500X overpressure without damage.[6]

The ultrastable, high-temperature sensors were designed for operation over the −40 to 250°C temperature range. They achieve a best-fit-straight-line pressure nonlinearity of less than 0.02% routinely for pressure ranges from 15 to 5000 psi. Repeatability and reproducibility were measured by extensive pressure and temperature cycling over the full operating pressure and temperature ranges. Stability of offset voltage and full-scale output is better than ±0.1% of FSO during a two-month period of repeated pressure/temperature cycling. Short-term stability (>24 h) better than 0.01% FSO is typical. These performance capabilities result in passively compensated transducers with overall error budgets less than ±0.5% over a 300°C temperature range. In contrast, one recent report[7] on polysilicon-based pressure sensors quoted typical drifts of 0.5%/1000 h at a constant temperature of only 127°C.

The sensors with 500–1000X overpressure protection were also produced by using the silicon fusion bonding technique. A shallow cavity (0.5 to 3.5 μm deep) was etched in a silicon wafer to provide both a reference volume and a diaphragm backstop. A second silicon wafer that would become the diaphragm with isolated single-crystal silicon strain gauges was fusion bonded over the cavity to complete the structure. Various geometries and pressure ranges were tested. The most striking result was that of a sensor with a round diaphragm having a measured sensitivity of 3.2 (mV/V)/psi at low pressures, which would be suitable for 5-psi full-scale applications; the sensor was subjected to multiple overpressures of 5000 psi and continued to operate without fracture of the diaphragm. This accomplishment must be viewed against the fact that a conventional silicon pressure sensor will typically fail at pressures in the range of 10–30 times rated full-scale pressure. Efforts continue toward commercialization of this class of sensors in mass produced form.

Another particularly interesting product development has been that by the CEC Instrument Division of IMO Industries[8] of a diffused silicon wet/wet differential pressure sensor and transducer for the temperature range from −100 to +120°C. Both sides of the sensor can be in direct contact with insulating or conducting liquids, providing only that there are no volt-level electrical potentials between the sensor and the liquid in the conducting

case. Six standard pressure ranges are available between 10 and 500 psid. They tolerate a maximum line pressure of 500 psi on either side and have the following specifications:

Nonlinearity and hysteresis	max. 0.25%
Repeatability	better than 0.05%
Standard compensated temperature range	-65°F to +250°F
Thermal zero stability	±0.15% FSO
Thermal sensitivity stability	±0.15% FSO

In Germany, workers at Siemens AG have reported[9] development work on a silicon pressure sensor with a frequency output that makes use of the piezoresistive effect in MOS field-effect transistors in CMOS ring oscillators integrated into the diaphragm of the sensor. Serious cross-sensitivities of pressure with temperature and supply voltage are nearly eliminated by a signal-conditioning approach using the ratio (R) of the frequencies of two specifically located ring oscillators in the relationship, signal = R - 1/R. This signal provides an increase in pressure sensitivity by a factor of 4 over that of the individual ring oscillators. The work has demonstrated the feasibility of a silicon pressure sensor with frequency output that offers a chance to integrate tailored signal conditioning circuitry on the sensor chip; such an integrated pressure sensor has capacity for on-chip calibration and compensation of the digitized signal.

Earlier work by a Japanese group at Toyota Central Research and Development Laboratories[10] produced an integrated pressure sensor with both voltage and frequency outputs. The sensor has two piezoresistive bridges, temperature compensation circuitry, high-level amplifiers, and a frequency converter on a single-crystal silicon chip. The sensor was developed for automotive engine control and industrial robot control. Characteristics include temperature coefficient of sensitivity of the voltage output <0.06%/°C over the temperature range -20 to 110°C, nonlinearity <0.4% of full-scale output (FSO), and a stable transistor-transistor logic-level frequency output. The output voltage span is 1 to 4 V for a pressure range of 0 to 750 mm mercury, giving a voltage sensitivity of about 4 mV/mm mercury at a dc supply voltage of 5 V. For the frequency output, the nominal zero-pressure frequency is 210 kHz; the sensitivity of the frequency output is about 30 kHz for a pressure change from 0 to 750 mm mercury with a nonlinearity <3% FSO.

3.2.1.4 Exotic silicon pressure sensors

Through the years, silicon pressure sensing technology has been extrapolated far beyond the "conventional" piezoresistive and capacitive sensor applications by many developers. Some examples of prototype experiments are noted below:

A Japanese group at Yokogawa Electric Corporation[11] has developed a high-precision pressure sensor fabricated from a single-silicon crystal with two resonant strain gauges in vacuum cavities on the surface of the diaphragm. The epitaxially grown, selectively anisotropically etched vacuum cavities isolate the resonant strain gauges from the effects of the surrounding fluid, which include reducing the Q-factor of the resonator and reducing the stability. In the vacuum cavities, the resonators have a Q-factor of about 50,000, with an oscillation stability better than 1 ppm. The temperature coefficient is only -40 ppm/°C, and the difference between the two gauges <5 ppm/°C. A permanent magnet in the sensor housing provides magnetic bias for the strain gauges, which are maintained in resonant vibration by an ac feedback circuit. The output frequencies of the two strain gauges are

multiplexed and processed in an electronic counter and a personal computer. Pressure is related to frequency by a third-order equation that fits the data with an error of about 0.05% FSO when resonator amplitude is not controlled; the error of fit is reduced to <0.01% when a self-oscillation with amplitude control is used. The vacuum microcavity is reported to withstand >14,500 psi.

A very innovative experimental design called a PRESSFET was developed and tested by a Dutch group.[12] It is a metal-oxide-semiconductor field-effect transistor- (MOSFET-) based pressure sensor incorporating an air gap whose thickness is a function of pressure and a permanently charged dielectric layer (electret) between the gate and the bulk of the MOS structure to obtain a MOSFET with a precharged variable gate capacitance. The authors claim a maximum sensitivity about ten times higher than that of a piezoresistive pressure sensor of comparable dimensions. A great deal of work will be required to reduce this prototype to a practical sensor, but the technology may have some very long term developmental possibilities.

Silicon Hall-effect devices have been found to have an offset voltage that is very sensitive to mechanical strain.[13] The Japanese group that discovered the effect and named it the Kanda effect analyzed its possible use as strain and pressure sensors. They proposed a pressure sensor for miniature biomedical applications, but apparently none has ever been implemented.

3.2.1.5 Summary

The rapid progress of solid state silicon pressure sensing technology through the application of micromachining and integrated circuit techniques makes this a very promising area, where a moderate amount of development support now may produce significantly improved pressure sensors for power plant applications within a reasonable time frame. The advantages and disadvantages of silicon sensors can be summarized:

Advantages: While not as small as some fiber-optic sensors, silicon pressure sensors are 2 to 3 orders of magnitude smaller than typical conventional pressure sensors. Because they are fabricated by integrated circuit mass production techniques, the unit cost is very much lower than that of conventional sensors. The combination of small size and low cost makes it feasible to consider locating multiple sensors at each measurement location with the increased reliability and cross-comparison advantages inherent in such an arrangement. The fact that some silicon sensors are inherently digital (i.e., have a frequency output) makes them particularly compatible with digital data acquisition and processing techniques with all of the attendant advantages.

Disadvantages: It may not be possible to take complete advantage of the small size of silicon sensors, because of the large high-pressure housings often required for pressure sensors; however, it may well be possible to contain multiple sensors in a single high-pressure housing. We have only limited information about the radiation tolerance of silicon pressure sensing systems, but it is not expected to be much better than a total integrated gamma dose of 1 Mrad. Techniques for radiation hardening silicon integrated circuits will certainly be applicable to many parts of a pressure sensing system.

Findings: Silicon pressure sensors will be used in many industrial applications where cost and convenience are the controlling considerations, and their small size and ease of

incorporation into integrated control circuits provide compelling commercial advantages. However, they may require a higher degree of protection from interactions with process fluids; high-temperature, high-radiation environments; and EMI/RFI inducers than some of the conventional transducers in current use. Their use is expected to increase dramatically in the near term (1–5 years) in balance-of-plant applications in nuclear power stations and in most control systems in fossil-fueled steam plants.

3.2.2 Fiber-Optic Pressure Sensors

3.2.2.1 Introduction

Fiber-optic technology for communications is mature and is broadly and profitably applied worldwide. The great success of these communication applications has led to extensive development work to apply the advantages of fiber-optic systems to sensors of a wide range of physical variables, including pressure. Despite the research and development to date, fiber-optic pressure sensing technology is definitely not mature, and very few devices have reached the stages of industrial application or commercial product. However, the development of high-quality components for fiber-optic data communication systems makes such essential components as single and multimode cables, connectors, and data transmitters and receivers available for application in fiber-optic sensor systems.

3.2.2.2 Advantages and disadvantages of fiber optics

Fiber-optic pressure sensors can exhibit numerous advantages, the most important of which are immunity to electromagnetic interference (EMI) and electromagnetic pulses (EMP), isolation of electrical power from hazardous areas, small size (intrinsic sensors), large bandwidth, good performance in dynamic pressure measurements, and extreme sensitivity (i.e., the ability to detect extremely low signal levels and small signal changes). However, collateral with these advantages are certain disadvantages and limitations, which vary with the particular type of fiber-optic system employed. These disadvantages include cross sensitivity to other variables (particularly temperature), fragility, poor compatibility with process environments, radiation-induced darkening, the requirement for very complex and expensive signal processors for many applications, and poor performance in static pressure measurements. When one or more of the unique advantages of fiber-optic sensors is essential to an application and the disadvantages can be alleviated or tolerated, fiber optics can reasonably be the technology of choice.

3.2.2.3 Sensor types

Before discussing fiber-optic pressure measurement systems, it is useful to examine the typical characteristics of "fiber-optic sensors" as they have been analyzed by many workers in the field. Several organizational outlines of fiber-optic functions and components are in use. The material that follows will make use of concepts from several sources and is a structural rather than a functional analysis.

Fiber-optic sensors are usually considered to fall into two basic structural classes, extrinsic and intrinsic.

The **extrinsic sensor** is in fact not a fiber-optic sensor at all. The fiber is passive and is actually used only to transmit light to and from an off-fiber sensor. In this class, light may be transmitted from a source to a remote (ex-fiber) sensor, exit the fiber to be quantitatively modified by the sensor, then return to the original or to some other fiber to be transmitted to an electro-optic transducer for conversion to an electrical signal. If the ex-fiber sensor is not photoactivated, the fiber may only transmit an optical signal from the sensor to an optoelectronic detector. Obviously, in this class any tendency of the fiber to modify the signal is undesirable. Extrinsic sensors may or may not have the characteristic fiber-optic advantages of removing electrical components from hazardous areas, freedom from EMI effects, and small size, depending on the nature of the ex-fiber sensor. They can provide noncontacting sensing in applications where machinery is moving or through a window when a process must be enclosed. The specific disadvantages of the extrinsic sensors stem from having the light exit from and return to the same fiber or to another fiber; these include problems with alignment, vibration, contamination of surfaces, and possible stray light effects. Extrinsic sensors may modulate the amplitude, phase, state of polarization, spectral distribution of the exciting light, or a time-related parameter such as the decay constant of a fluorescent scintillator or the frequency of a quartz resonator.

In the **intrinsic sensor**, the fiber itself is the active element. Such devices are contacting or immersion sensors. The fiber is used both to quantify the parameter to be measured as an optical signal and to transmit light from the source through the sensor to the electro-optic transducer. The phenomenon to be measured must alter the fiber characteristics in an unambiguous way so the transmitted light is related to the measured parameter in a defined functional relationship. Intrinsic sensors usually have a measuring fiber and a reference fiber to provide first-order compensation for extraneous effects. Two basic types of intrinsic fiber-optic sensors are phase sensing and amplitude sensing: Phase sensors use the optical phase shift caused by straining the fiber or altering its index of refraction. All phase-sensing types require complex and expensive optical equipment and signal-processing electronics. For this reason, they are ordinarily used only in sophisticated applications where ultimate sensitivity is required (e.g., naval defense hydrophones and fiber-optic gyros). Phase sensors are of two distinct types: phase modulation and polarization rotation.

In phase modulation sensors, the dominant parameter is fiber length change, but diameter and refractive index changes also occur and affect the output. The optical systems used are usually fiber-optic interferometers of the Mach-Zender or Michelson designs. In the most sensitive mode of operation, the change in phase is measured along the edge of a single fringe, giving an analog (intensity) output; in a less sensitive mode, fringes are counted, giving a digital output with attendant advantages of freedom from spurious attenuation effects and other factors that affect analog measurements. Extreme sensitivities can be attained, but major problems with the phase modulation sensor include sensitivity to multiple parameters (e.g., temperature), the fact that usually phase modulation must be converted to an intensity modulation prior to detection, and the problem of initializing the output to the value of the measured parameter on powerup (for either fringe counting or intensity modulation types). It is possible to improve selected parameters and reduce cross sensitivities by detailed fiber design, special coatings, and often complex electromechanical ex-fiber devices.

Polarization rotation types depend on polarization of coherent radiation in a single-mode fiber. For one type of pressure sensor, an initial birefringence is produced by wrapping the fiber around a cylinder under tension. Additional strain from pressure causes a rotation of the plane of polarization and a measurable change in amplitude of the output. Alternatively, the angle of rotation of the polarization could be measured by a servo device seeking an

intensity maximum or minimum. Any amplitude measuring type is sensitive to degradation from radiation-induced darkening of the fiber.

Amplitude sensors use the fiber as the sensor and detect the change in intensity of transmitted light caused by light loss through the cladding as a function of microbending, flexing, refractive index effects, or surface effects. Note that the fiber is intrinsically detecting an external effector; but an external, calibrated pressure sensing mechanism is required to produce the quantified attenuation effects in the fiber. This type is compatible with multimode fiber technology and can provide relatively simple, effective sensors adequate for many process applications. However, all instruments that encode data as variations in intensity or amplitude of light are subject to a large number of corrupting effects. Transmitted intensities are affected by connector alignments, connector contamination, or changes in alignment during maintenance; changes in the specific configuration of the fiber run; any movement, bending, or vibration of the fiber; deterioration in the low-index-of-refraction core cladding; radiation-induced darkening; and changes in source intensity or photosensor sensitivity. These problems are particularly unfortunate, because the intensity-dependent intrinsic sensors are much simpler and less expensive than the phase modulation types.

In contrast to amplitude-coded signals, some optical sensors produce time-coded signals (i.e., frequencies, wavelengths, or decay rates that are essentially independent of signal amplitude or attenuation in transmitting cables and connectors). Such signals must be received at levels greater than the system noise floor. Fabry-Perot sensors for pressure and for temperature and pulse laser-activated phosphor time decay for temperature provide such time-coded information and might be useful in radiation environments. It should be noted, however, that time-coded (digital) information always requires more signal processing time than simple amplitude (analog) information and may not provide a detectable change in process conditions soon enough for some safety applications.

Workers at the Babcock and Wilcox Research and Development Division[14] have developed a fiber-optic pressure gauge usable over the temperature range of 20 to 430°C with a total deviation over this temperature range of <1.2% of full scale. In this gauge, the deflection of a high-strength steel super alloy diaphragm is detected with a microbend fiber-optic sensor. A second fiber is used to reduce the effect of light source fluctuations. The gauge is usable to pressures of 22.8 MPa (3300 psi) and is accurate to 0.58% of full-scale pressure.

Workers at ORNL on a U.S. Air Force contract identified[15] an intrinsic multimode fiber-optic sensor for measuring impulse pressures up to 10,000 psia using microbend and refractive index mechanisms. Some investigations of pressure-sensitive phosphors are also reported, but the phosphors could not be used directly at pressures less than 10,000 psi. A piston device was suggested to increase the force on the phosphor at lower working pressures.

Other classifications of fiber-optic sensor systems are based on a breakdown by type of light source; fiber type (e.g., single or multimode, polarization-maintaining, specialized); and sensor modulation techniques (e.g., intensity, polarization, wavelength, frequency, Doppler shift, path difference, index of refraction, time modulation). A very extensive and detailed classification of fiber-optic sensors and components is contained in reference 16.

3.2.2.4 Discussion

Additional insights into fiber-optic sensor applications can be gained by iterating and expanding on the functional aspects of the structural types and by considering some examples.

A unique extrinsic sensor is the Fabry-Perot interferometer implemented in silica and of a size comparable to the light-transmitting fiber optic. The interferometer on the distal end of a single multimode fiber is excited by a relatively narrow band of wavelengths from a light-emitting diode. Pressure on the thin outer surface of the very shallow resonant cavity deflects that surface and changes the tuning of the cavity, thus affecting the spectral distribution of light retroreflected to the signal detector. The reflected light is divided into two wavelength bands by filters and analyzed to provide a signal that is dependent on the ratio of the intensities in the two wavelength bands. Use of the ratio technique alleviates the effects of spurious attenuations, even those of radiation darkening, provided only that the reduction in transmission is uniform for all wavelengths of interest. This approach is the basis of the one widely commercialized fiber-optic pressure sensor, the Metricor ColorOptic.

A similar, somewhat simpler extrinsic fiber-optic pressure sensor was developed for measuring pressure transients in a laser cavity where massive levels of EMI ruled out any electrical sensors.[17] Workers at Los Alamos National Laboratory used a commercial displacement-measuring fiber-optic sensor, made by Mechanical Technology, Inc. (Model KD-100 Fotonic sensor), to measure the deflection of a 0.25-in.-diam, 0.0035- or 0.005-in.-thick diaphragm mounted on the end of the fiber-optic bundle. The device provided a full-scale pressure of 100–150 psi with a signal band width of ~30 kHz for resolving the pressure transients to ~20 μs.

The mature technology of fiber-optic digital data transmission can be used to advantage even if intrinsic fiber-optic digital pressure sensors are not available. Almost any extrinsic sensor data can be processed at the sensor to frequency modulate a light-emitting diode and permit EMI-free transmission of digital data by fiber-optic cables. If the data from each sensor in a network are wavelength or frequency-band coded, a number of sensors can be multiplexed on a single fiber-optic cable. The optical fiber is used only to transmit data, and many of the previously listed advantages of fiber-optic systems may be forfeited (e.g., isolation of electrical power from hazardous areas and small sensor size).

A possibility exists for a type of extrinsic fiber-optic pressure sensor based on the effect of pressure on the fluorescent decay constant of an appropriate scintillator. The scintillator would be excited by a short laser pulse, and the fluorescence decay rate at a specific wavelength would be measured. Such a sensor would be analogous to previously reported temperature sensors and would depend upon finding a scintillator for which the pressure effect on the decay constant is significant at pressures of interest and for which temperature effects are either negligible or can be adequately compensated. Known scintillators exhibit detectable pressure response at only very high pressures (in the gigapascal range), and the probability of succeeding in development of such a device is not high, but the advantages of such an intensity independent sensor would be great.

Herzog et al.,[18] have reported the principle of an optical-fiber differential pressure sensor, a new technique to calibrate the sensor and a way to achieve "a satisfactory correction of temperature effects." The sensor itself consists of a double-fiber Mach-Zender interferometer to compensate for temperature effects. The system has automatic pressure equalization zeroing, which eliminates the pervasive problem of interferometer initialization and "most of the long-term drift." The sensor is set into an insulating box to decouple variations in room temperature. Optical phase shifts are measured with a resolution better than 5×10^{-4} fringe, providing a smallest detectable pressure difference of around 0.0145 psi at 14.5 psi. A sample of 16 measurements showed a bias error of 1.5% and an accuracy, at 95% confidence level, of 0.5%. Strangely, the device appears to be quite sensitive to the liquid medium applying the pressure (e.g., water, oil, or ethanol). The authors state that

"Practical applications are thus far limited by the high temperature and vibration sensitivity of the lead fibers."

Bock et al.[19] have reported theoretical and experimental development, construction, operation, and temperature desensitization of a 14,500-psi fiber-optic pressure sensor. The sensor can be regarded as a one-fiber Mach-Zender interferometer, carrying two modes differing in polarization and whose phase delays exhibit different responses to the external pressure on the highly birefringent polarization-maintaining fiber. Application of a new temperature compensation technique reduces the temperature response to ±8% change in sensor output over the temperature range 270–310 K (vs ±87% for an uncompensated sensor). The data suggest that a 3500-psi transducer could be produced with proper choice of sensing fiber length and that improvements in the temperature compensation are possible. The authors state that "To achieve an industrially acceptable device, however, a microprocessor controlled system will have to be integrated with the fiber optic sensor to increase resolution, to provide automatic calibration and drift compensation and to allow for remote interrogation of a number of sensors at various ranges, sensitivities and resolutions, according to the needs of the particular application." Despite the fact that the polarization effect is a phase-shift phenomenon, the sensor is an amplitude type, making use of only one edge of one fringe.

Electricite de France (EdF) has embarked on an extensive program[20] looking into the technological outline of the next generation of pressurized water reactor power stations, which will start to appear in the years 2015–20. One part of this program is investigating the potential for distributed sensors and optical-fiber networks in the electric power industry. They are evaluating both continuous and discrete fiber-optic sensors connected in a variety of possible fiber-optic communication network geometries. Continuous measurement uses light backscattering phenomena produced by injection of a laser pulse into the fiber (e.g., Rayleigh scattering, Raman effect, fluorescence). Temporal analysis of the resulting signal is used to localize and quantify the physical parameter detected along the fiber. Light modulated at frequencies up to a few gigahertz can also be injected with frequency analysis of the backscattered signal. Temporal analysis has a range of several kilometers with space resolution of a few meters, whereas frequency analysis offers centimeter resolution over a range of a few meters. A number of fiber-optic sensor and network projects are currently under development at EdF or are supported contractually at other installations; interestingly, none of the reported effort is directed toward fiber-optic pressure sensors. EdF's medium-term outlook and objectives are stated as follows:

"Although optical fiber sensors are the subject of intense R&D programs, their industrial market remains small. Currently available optical fiber sensors are simple, often working on an on/off basis with the fiber used only to transmit light. Optical fiber sensor networks are a more recent development, and have not yet entered the industrialization phase, although plans do exist for industrial scale networks. The reliability and economic viability of optical fiber sensor networks remain to be proven in the field. Optical fiber sensor and network technologies are important developments that may prove to be decisive in years to come, because:

(i) they are insensitive to electromagnetic interference, are compact and light, and intrinsically safe and have a high data-throughput capacity;
(ii) they are part of a leading-edge technology which is in progress;

(iii) their costs are expected to drop;
(iv) there is increasing demand for top quality, reliable sensors offering excellent prospects."

"These factors have prompted EdF to pursue its research and development activities and to enter cooperation agreements with various other scientific and industrial organizations. Remaining active in the field will allow EdF to integrate new developments into the range of technologies it already uses."

Findings: Fiber-optic pressure sensors could provide a more extensive sampling of plant process pressures, an improved mode of signal transmission and processing, and freedom from EMI/RFI in nuclear and fossil steam plant monitoring. Small sensor size, large signal band width, rapid dynamic response, and high sensitivity are favorable characteristics; potential incompatibility with process materials, limited static performance and stability, significant cross sensitivity to other process conditions, and expensive signal processors are trade-off disadvantages. Fiber-optical systems must be designed to minimize the effects of nuclear radiation on optical materials and installation deficiencies, and those materials must also be protected from deleterious contact with process fluids. The expected improvements in this technology should permit extensive replacement of conventional analog electromechanical sensor systems with digital fiber-optic sensor systems within the next decade. These finding are consistent with EPRI plans for developing advanced distributed control systems and the requisite sensors and data communication systems for the next generation of electric power plants.[21]

3.3 INNOVATIVE PRESSURE SENSOR TECHNOLOGY

A wide variety of innovative pressure-measuring concepts have been proposed or actually used in various industrial and scientific applications, each providing some special benefit or seeking to overcome some deficiency in conventional, commercially available pressure gauges. While we do not even attempt to provide a comprehensive listing of such gauges, nine categories were selected for some special interest or applicability to electric power plant use. These categories are

I. Electro- or fiber-optic pressure gauges;
II. Electromechanical pressure gauges;
III. Integrated silicon strain-gauge pressure gauges;
IV. Foil strain-gauge pressure gauges;
V. Magnetomechanical pressure gauges (linear variable differential transformer and variable reluctance);
VI. Piezoelectric pressure gauges;
VII. Quartz acoustic pressure gauges;
VIII. Mechanical resonance pressure gauges; and
IX. Bulk material properties (e.g., ultrasonic, acoustic, magnetic, phosphor).

Although it has not been possible to find actual examples of gauges made and characterized that incorporate some of these phenomena, particularly those in category IX, many (at least 13) commercial products use the silicon technology listed under category III. The items surveyed are listed in Table 3.2.

Table 3.2 Innovative pressure gauge matrix[a]

Pressure sensor technology assessment acceptance criteria comparison		Electro-optic and fiber-optic pressure gauges			Electromechanical pressure gauges				Integrated silicon strain gauge transducers													Foil Strain Gauge Pressure Gauges				Magneto-Mechanical Pressure Gauges			Piezo Electric Pressure Gauges		Quartz Pressure gauges	Acoustic Resonant	Mechanical Resonance
		B&W Devel.	B&W AMTEC FoSure	Metricor P104	Honeywell ST3000		Rosemount 1151	Rosemount 1154H	Gulton GMS110	NovaSensor NPH	Endevco 8515B	Sensym SCC ISO	IC sensor 154	Motorola MPX2200	MicroSwitch 14PC	Foxboro 1224	Revere PT11	Sensotec TJE	Viatran 22	Data Instrum SA	Schlumberger Statham	TransMetrics P21L	West Coast Research PA194SH	Gulton Servonic 3588-42	Teledyne-Taber 2412	LVDT Robinson Halpern 150	LVDT Shaevitz P3000	Var. Reluct Kaman Instrum KP1911	PCB Piezotronics 102A		Saw Kollmann	Resonant Quartzdyne, Inc. Q55K	Yokagawa Tuning Fork 2661
				Cavity			Capacitance																										
Criteria	Specification		Microbend	Reflectance	Analog	Digital	Nonsafety	Nucl. qual.	Analog	Analog	Analog	Analog	Analog	Analog	Analog	Analog	Analog	Wetwet				Foil	Foil	Thin Film	?								Digital
Stability	<0.05% FSI	0.30%	<1%				0.1/6 months					0.10%								±0.25%	<±1%	±0.15%											High
Drift	<0.05% FSI in 36 months	<2%						0.2%/18 months																								< 0.03%/year	
Accuracy/repeatability	±0.1% FSI	0.30%	<1%	±0.5%	0.08%	0.05%	±0.1%	±0.25%	0.05%			0.20%	±0.25%		0.75%	<±0.5%	±0.05%	±0.1%	<±0.4%	<±1%		<±1%		±0.10%	0.20%	±0.5%	<±0.5%				±0.02%	0.01%	±0.01%
Hysteresis	±0.05% FSI	0.15%							±0.05%	±0.05%		0.50%			0.75%					<±1%				±0.10%	0.50%							0.01%	
Nonlinearity	% FSI						±0.1%		±0.25%	±0.2%	0.50%			<±0.25%	0.50%					<±1%			<0.05%	±0.20%	0.50%						<0.8%	0.01%	
Response time (sensor)	<100 ms	<10 ms	<1ms	200 ms	250 ms		>200 ms	200 ms																								<1 s for 99.5% FS	0.6 ms
Dead band (or zero pressure offset)	<±0.05% FSI	<0.05%					±0.25%	<±0.66%						±0.12%				±0.25%				±2%											
Temperature compensation coefficient	<±0.1% FSI	0.16%	<1%		0.18%	0.13%	±0.5%/100°F			1%/120°F	<4%	0.50%	1%	±1.3%		±2%			±2%	±1%	<±0.01%/°F			±0.065%/°F			±0.02%/°F				0.06 ppm/°F	
Operating range Maximum	Up to 0 to 3,500 psi (gage)	3,750 psi	3,000 psi	1,000 psi			6,000 psi	3,000 psi	to 5,000 psi		50 psi		0 to 300 psi	0–30 psi	0–15 psi	5,000 psi	10,000 psi	750 psi	10,000 psi	5,000 psi		15,000 psi		15 to 5,000 psi		300 psi	100 psi	5,000 psi	5,000 psi		1.5 to 16 psi	5,000 psi	–15 to 30 psi
Minimum	psi (gage)												0 to 5																				
Maximum	Up to 0- to 1,000-in. w. c. differential		100 psid		400 in. w.c.		300 psid					30													±500 psid		50 psid	1,000 psi					
Minimum	in. w.c. differential				1 in. w.c.		0.5 in. w.c.			1 or 2 in. w.c.															±1 psid		0–2 in. w.c.	5 psi					
Overpressure protection	>150% of FSI (gage)	>150%	300% FS				4,500 psi	4,500 psi		500%							200%	>200%	>150%	>150%				150%	1,200 psid		>150%					150%	113%
	>1,000% and >150 psig (differential)				3,000 psi		2,000 psi																				Variable						
Maintenance	>15,000-h (interval)	?																															
On-line calibration capability	On-line, in situ	Yes																															
Sealed unit/process boundary	No gaskets or O-rings	Yes			Yes																						O-rings						
Failure mode detectability	All modes detectable	Yes			Yes																												
Environmental qualification	>10 years in benign environment	?																															
Mean time to failure	>10 years in benign environment																																
EMI/RFI immunity	10 V/m at 10 kHz to 1 GHz	?			30 V/m		30 V/m													<1% @ 10 V/m											Excellent		
Power supply requirements	110 VAC, ±24 VDC	Yes		115 VAC	Yes		12 to 45 VDC		10 VDC			1.5 mA	1.5 mA		10 VDC		12 VDC	10 VDC	10–28 VDC	9–20 VDC		5 VDC		24 VDC	20 to 36 VDC		10 to 32 VDC	15 VDC	8 to 20 VDC				115 VAC
Smart capability	Self-diagnostics	Yes			Yes		Yes																										
Output A/D/O span	4- to 20-mA or 0- to 100-mV FSI	Yes		–10/+10 V	Yes		Yes		2.5 mV/V	75 mV	300 mV	65 mV	100 mV	0–40 mV	250 mV	100 mV			6 V	5 V	1 to 5 VDC	5 VDC	>1 V	0 to 5 VDC	5 VDC		5 V	1 V	10 to 60 kHz				2 VDC
Output sensitivity	% FSI										6 mV/psi	65 mV/psi		1.4 mV/psi	16 mV/psi		2 mV/V	2 mV/V	2 mV/V				0.001% FS						1 mV/psi	6.9 kHz/psi		67 mV/psi
Measurement principle	Nonintrusive, direct	Direct			Direct							SGB																					
Temperature limits (compensated)	T(E) > 150°F (environment)	Yes	800°F	570°F	Yes		185°F	250°F	250°F	158°F	250°F	122°F	176°F	257°F		180°F	150°F	250°F	170°F	185°F	180°F	160°F		250 (nonscompensated)	160°F	150°F	150°F	1,000 (noncompensated)°F		260°F	>>160°F	350°F	104°F
	Lower limit		–22°F	–40°F			–40°F	40°F	–85°F	32°F	–65°F	32°F	14°F	–40°F		–20°F	–40°F	–70°F	70°F	30°F	–20°F	0		–45°F	–10°F	25°F	25°F	–100°F		75°F			41°F
	T(P) > 1,100°F (process)				257																												
	Sensor																																
Compatibility	40-year life	Yes			Yes																			1 m									
State of development	Current	Current		Product	Product				Experimental	Product	Product	Product	Product	Product	Product	Product	Product	Product	Product	Product	Product	Product	Product	Product	Product	Product	Product	Product	Product	Product	Experimental		Product
Sensor size (footprint)		Yes	1.1-in. OD	0.032-in. diam	5 × 8 in.		4.5 × 4.5 in.					0.68-in. diam						3-in. diam									2.75 in. sq.			2-in. dia			
Acceleration and vibration	MIL STD 202	Yes					±0.05%	±0.05%/8.5 g												50 g for 5 s				50 g, 2–2,000 Hz						<0.02 psi/g	Excellent		
Pressure cycling	10 k cycles MTTF 0 to FS 40 years	Yes			Yes																												
Radiation resistance	Mrad						to 110 Mrad																										
Temperature coefficient Zero	%/°F			0.014%/°F					0.005%/°F				0.01%					0.003%		0.01%				±0.05%			0.02 %	<0.02%			±0.4%/°C		±0.0005%/°F
Span	%/°F			0.014%/°F					0.005%/°F				0.01%					0.003%		0.01%				±1.25%			0.02%	<0.02%			±.085%/°C		±0.0005%/°F
Null offset (difference)	Volts																			1 ± 0.15 V													
Resolution	%FS or psi																																±0.0003% FS

[a]A/D/O = analog/digital/optical; EMI/RFI = electromagnetic interference/radio-frequency interference; FS = full scale; FSI = full-scale indication; MTTF = mean time to failure; Nucl. qual. = Nuclear qualified; SGB = strain-gauge bridge; T(E) = temperature of environment; T(P) = temperature of process; w.c. = water column.

Ten representative examples of innovative pressure sensing technology are listed on separate sheets (PS-1 through PS-10) in Appendix B, as follows:

PS-1 Metricor Fiber-Optic ColorOptic™ Fabry-Perot Pressure Probe,
PS-2 CEC/IMO Wet/Wet Silicon Piezo-Resistive Differential Pressure Sensor,
PS-3 Novasensor's Fusion-Bonded Single-Crystal Silicon Pressure Sensor,
PS-4 Gulton Servonic Silicon-Film Strain-Gauge Pressure Sensor,
PS-5 Kaman's Variable Reluctance Pressure Sensor,
PS-6 Quartzdyne's Shear-Mode Quartz Resonator Pressure Sensor,
PS-7 Yokagawa's Mechanical Resonator Tuning-Fork Pressure Sensor,
PS-8 Kollsman's Quartz Standing Acoustic Wave Resonant Pressure Sensor,
PS-9 Ultrasonic Pressure Sensing, and
PS-10 Fluorescent Decay-Time Pressure Sensing.

No commercial products are known that employ the principles in PS-9 and PS-10, but they are listed because they represent potential development possibilities. At least the first seven are represented by commercial products; PS-8 appears to have been at least produced as a prototype.

The first of these (PS-1), the Metricor Fiber-Optic ColorOptic™ pressure sensor, was described briefly under Fiber-Optic Pressure Sensors. It should be noted that Metricor has developed a temperature sensor using the same principles as the pressure sensor. In the pressure sensor, the Fabry-Perot interferometer detects a displacement of the distal surface of an evacuated cavity. In the temperature sensor, the "cavity" is filled with a material whose index of refraction changes with temperature. The two photodetectors compare the amplitudes of two fringes in the interference pattern within a narrow wavelength band so that any degradation of transmission is likely to affect both fringes equally. This is a novel and potentially very useful fiber-optic pressure sensor.

Sensors PS-2, -3, and -4 were discussed under Silicon Pressure Sensors.

The variable reluctance pressure sensor (PS-5) produced by Kaman Instruments, Inc., (Fig. B.5 in Appendix B) offers one of the more promising technologies for developing differential pressure transducers that do not require isolation from process fluid. This transducer (Model KP-2025) is very similar to a variable reluctance sensor described in a U.S. Department of Energy publication[22] of November 1981. Although the KP-2025 is a single-sided pressure transducer, the variable reluctance technique is easily amenable to differential designs. The Kaman sensor is only one type of magnetomechanical sensor that includes eddy-current[23] and linear variable differential transformer (LVDT) sensors,[24] which are all inherently amenable to nonisolated, differential pressure designs. In these devices, in contrast to the variable capacitance device built by Rosemount, Inc. (P-01), the sensing mechanism is separated from the process by an elastic diaphragm, usually metal, whose displacement is measured magnetically. This feature avoids the necessity of maintaining a fluid buffer between the gauge and the process; that is particularly important in the Rosemount device, which depends on the dielectric properties of the filling fluid. Absence of filling fluid also allows the Kaman sensor to operate at temperatures as high as 540°C, a capability that may be of value in fossil plants and in some advanced nuclear power plants that are gas cooled or liquid-metal cooled. Liquid-metal-cooled plants that require measurement of pressure of sodium at 650°C or gas pressure above that of liquid sodium have used NaK-filled capillaries to transmit pressures from limp bellows at the distal end to stiff bellows at the proximal end where the gauge sensors are located. These developments

are summarized in an Energy Technology Engineering Center (ETEC) report.[25] One such device is offered commercially by Kaman Sciences (Model HP-1911). The variable reluctance, eddy-current, LVDT sensor technology is mature and widely applied to measuring displacement in various demanding applications. High-quality signal-conditioning and transmission systems for transducers of this type are commercially available. These technologies offer the most direct route to short-term development of satisfactory alternative nuclear-qualified single-sided and differential pressure transducers.

The downhole pressure transducer (PS-6) manufactured by Quartzdyne, Inc., for oil field exploration (Fig. B.6 in Appendix B) uses shear-mode quartz resonance technology to provide an instrument with exceptional accuracy and ruggedness. The pressure sensor is a hollow, machined single-crystal quartz resonator that changes frequency of resonance as a function of applied pressure and retains the repeatable performance inherent in single-crystal quartz. A quartz resonator temperature sensor provides digital temperature compensation over the calibrated range and a measurement of the sensor temperature. Because the temperature and reference signals are all quartz crystal vibration frequencies, many of the problems associated with the transmission and acquisition of analog signals are eliminated. The quoted capability of the sensor to operate at a maximum temperature of 350°F seems to be unnecessarily restrictive and might be raised for some advanced fossil or nuclear applications. Current implementations of the technology allow only absolute pressure measurements; however, this technology offers the most promising developmental approach to a superior new transducer for extreme conditions in power plant service. As noted in connection with the passivated silicon wet/wet gauges, high-pressure hot water will dissolve quartz and would force the use of some buffering fluid or protective coating for the quartz transducer. Nuclear qualification of the existing gauges would be necessary for nuclear applications.

Two innovative pressure gauges employ resonant structures to measure pressures, as does the Quartzdyne gauge: the Yokagawa tuning fork and the Kollsman standing acoustic wave (SAW) gauge. The Yokagawa tuning fork gauge (PS-7), of which there are several alternative structures that use the same principle, is described in a scientific report.[26] The pressure exerted on a diaphragm is imposed on a tuning fork vibrating element to change its resonant frequency. Other designs reported in the literature use single-ended or double-ended tuning forks. These devices could be relatively robust and insensitive to temperature and produce a frequency-coded signal that can be transmitted without attenuation. They have not, however, been notably successful in commercial products, excepting the resonant wire sensor now being produced by Foxboro (PS-05). The heavy fork structure may be less sensitive to seismic vibration than the thin wire.

The Kollsman SAW device (PS-8), although not a commercial product, has been reported in the scientific literature.[27] It uses SAW technology (which is currently being applied to many different types of measurements) to measure the stress created in quartz plates under compression and tension in a force balance structure made from BeCu metal that has a low temperature coefficient and good elastic properties. The pressure is transmitted through a metal bellows to the BeCu force structure all contained within an evacuated steel housing. This gauge may be rather susceptible to vibration or to loss of vacuum but is very sensitive with a frequency-coded signal of 4600 Hz/psi and a temperature coefficient of 25 Hz/°C or 0.4%/°C—not a particularly favorable ratio for a "temperature compensated" device. As described, it has a maximum pressure limitation of only 16 psi, but the basic principle might be redesigned into a more usable industrial version.

Ultrasonic technology[28] has been used extensively to measure physical parameters (e.g., temperature, flow, level, and pressure) in process industries, in many cases noninvasively.

Several approaches (PS-9) are shown in Fig. B.9 in Appendix B: (A) conventional cross transmission to measure pressure in a medium whose velocity of sound changes with pressure; (B) an application of Lamb (or Rayleigh or shear) waves in a pipe to measure the hoop stress caused by pressure inside the pipe; and (C) a device that uses the properties of an ideal gas contained in a T-shaped tube, isolated from the process with a compliant bellows.

The ultrasonic cross-transmission approach (A)—although simple, direct, and noninvasive—requires knowledge of the acoustic properties of the liquid contained in the pipe, its temperature, its level within the pipe, and possibly its flow rate. It could be clamped onto existing pipes and processes. As frequently found with ultrasonic methods, more than one property can be determined from a single measuring system, but in some, subsidiary measurements (of temperature) are required.

The ultrasonic Lamb-wave detection system (B) induces ultrasonic pulses in a pipe wall and measures their received amplitude, which is affected by the material properties of the pipe (rather than the fluid).[29] The attenuation of pulses transmitted in the pipe is related linearly to the stress induced in it by the pressure of the fluid contained in the pipe up to pressures as high as 650 bar (9400 psi) in a 12-in. pipe with a 1.2-in. wall. The method is noninvasive and retrofittable.

The ideal gas transmission method (C) uses two basic ultrasonic principles: that the transit time and the acoustic attenuation of pulses in a gas are separately dependent on the gas' pressure and temperature.[30] These pulses could be transmitted and received at one end of a side tube with a reflector at the other end to double the path length. This device requires an attachment to the system, a bellows to isolate the ideal gas from system fluid, but could be implemented with commercially available ultrasonic signal processors.

Fluorescent decay-time techniques (PS-10) have been used successfully[31] to measure temperatures on moving or otherwise inaccessible structures at temperatures from the helium point (4.2 K) to as high as 1500°C. The phosphor deposited on the subject whose temperature is desired is excited with a short laser light pulse and emits light at a characteristic wavelength that decays exponentially in microseconds. The decay-time constant is proportional to the temperature of the phosphor. Thus, a time-coded signal is produced that does not depend on the amplitude or gain of the excitation, the emission, the transmission, or the reception of the system. Similar behavior has been reported[32-39] for ruby, quartz, alkali halides, and oxide phosphors at very high pressures—[>1 GPa (145,000 psi)]. These phosphors have been used almost exclusively in ultrahigh pressure experimental devices known as diamond anvil presses where no other means are possible. The effect is undetectable at pressures of interest to the electric power industry using existing materials, but some possibility exists that other fluorescent materials might be found that would display these characteristics at pressures of interest to industry. It is, however, likely that the fluorescent decay in such materials would also be temperature dependent. It would probably be possible to separate pressure and temperature effects by using two different lines or two different phosphors in such a system. It should be noted again that the desirability of a time-coded signal is somewhat offset by the necessity of the time of acquisition and processing of exponential decay data.

There appear to be no "first principles" pressure gauges comparable to the Johnson noise thermometer for temperature measurements. Such gauges would be independent of the materials from which they were constructed, would not require calibration, and would allow calculation of pressure for measurements made of other physical parameters. Some gauges approach the absolute pressure gauge that involve the properties of a pure reference material (water or mercury) in a manner similar to the steam pressure-volume-temperature

relationships.[40,41] Other gauges that would qualify as absolute gauges include the mercury manometer and the Knudsen gauge, described by Strong,[42] and other references to vacuum gauge technology. Most of these gauges, including thermocouple and ionization gauges, are peculiar to vacuum measurements, use the properties of reduced atmospheres, and do not appear to be adaptable to power plant use.

Finally, it should be emphasized that the examples selected do not necessarily describe all of the innovative pressure measurement possibilities that might be developed for fossil and nuclear power plant applications.

3.4 COMPARISON OF INNOVATIVE SENSORS

The ten selected innovative sensor examples were compared (shown in Table 3.3) with the published attributes of conventional, commercial pressure gauges. Based on their published or projected capabilities, several of these gauges could be superior to the conventional gauges, eliminating oil filling, providing improved accuracy and range, offering on-line calibration, reducing maintenance, and extending reliable operational life. The quartz resonator gauge (PS-6), one of the silicon gauges (PS-3), and an ultrasonic gauge (PS-9) concepts could provide significant improvement. Another consideration should be added to the technical assessment: the risk of development of a usable pressure gauge for electric power plants (the "risk") and the possible value (the "benefit") of such a development. Adding these considerations to the comparison of performance characteristics, the ratings shift to show the quartz resonator (PS-6), the variable reluctance (PS-5), and a silicon sensor (PS-3) as good possibilities for further development. The SAW acoustic wave gauge (PS-8), a wettable silicon sensor (PS-2), and the fluorescent concept (PS-10) rated low due to perceived difficulties in providing reliable plant hardware or compatibility with process fluids. The thin film stain gauges (PS-4), a fiber-optic pressure gauge (PS-1), and the tuning fork resonator (PS-7) probably would have useful plant applications despite some limitations. These assessments are admittedly subjective and might be well off the mark, if some clever engineering were applied to some of the concepts. As an added comment, only the diaphragm-isolated variable reluctance gauge (PS-5) and possible an ultrasonic (PS-9) gauge could operate in direct contact with the primary coolant fluids in electric power plants; all others would require some intermediate fluid buffer. Even the dielectrically isolated silicon gauges would need some additional protection against reactions between high-temperature water and silicon oxide.

3.5 ADVISORY COUNCIL REVIEW

A one-day briefing on the interim results of the EPRI pressure sensor evaluation project was held at ORNL on March 31, 1992. Review council participants were invited from utilities and universities. The council members are listed below.

Marvin Belew, Tennessee Valley Authority
Fairman Bockhorst, Florida Power Corp.
Edward Bradley, Tennessee Valley Authority
Richard Fromberg, Pacific Gas & Electric
Robert Nelson, Georgia Power
Keith Norris, Tennessee Valley Authority
Massoud Rezapour, Duke Power Company
Robert Uhrig, The University of Tennessee

Table 3.3. Representative innovative pressure gauge summary[a]

Pressure sensor technology assessment—Selected representative examples of innovative pressure gauges										
	PS-1	PS-2	PS-3	PS-4	PS-5	PS-6	PS-7	PS-8	PS-9	PS-10
Manufacturer/Developer	Metricor	CEC-IMO	NovaSensor	Gulton	Kaman	QuartzDyne	Yokagawa	Kollsman	Panametrics, Rockwell, et al.	
Sensor type	Tuned cavity reflectance	Wet/wet piezoresist	Fusion bonded piezoresist	M 3588-42 Strain gauge	KP1911 Variable	Shear mode Quartz	Tuning fork mechanical	Quartz SAW resonant	Ultrasonic pulse echo	Fluorescent phosphor time decay
Category	Fiberoptic	Silicon IC	Silicon	Thin Film	Reluctance	Resonant	Resonant	Acoustic	Acoustic	Optic
Attribute										
Accuracy (short term)	-	√	+	√	-	+	+	-	-	-
Stability (long term)	√	√	√	√	√	+	+	-	+	-
Response time	+	+	+	+	√	+	-	+	+	√
Pressure limits	√	-	+	+	+	+	-	-	+	+
Temperature cross-sensitivity	√	-	+	+	√	+	+	-	-	-
Reliability/durability	-	+	√	√	√	+	-	-	√	-
Max sensor temperature	+	√	+	√	+	√	-	-	?	+
On-line calibration and/or response capability	X	X	X	X	X	X	X	X	?	X
EMI/RFI/vibration immunity	+	+	+	+	√	+	-	+	+	+
Radiation resistance	-	?	?	?	?	+	+	+	+	-
Overpressure withstand	√	-	+	-	-	√	-	-	+	+
Development status	Product	Product	Product	Product	Product	Product	Product	Concept	Developmental	Conceptual
Best feature	EMI immunity Small size	Wet/wet No oil	Stability Overpressure	High sensitivity	High temperature No oil filling	Accuracy Low drift	Accuracy Stability	Digital	Noninvasive	Amplitude independent
Worst drawback	Abs. press. only Durability	Low process temperature	Immature technology	Lack of information	Low accuracy	Bulkiness (?)	Orientation Slow response	Temperature and radiation effects	Depends on fluid property	Temp. sensitivity High press. only

[a]Abs. = absolute; EMI/RFI = electromagnetic interference/radio frequency interference; FS = full scale; press. = pressure; REF = reference value; temp. = temperature; URL = upper range limit; X = no known capability; (+) improvement, (√) acceptable, (-) limitation; ? = insufficient information.

Marcia Katz, The University of Tennessee
Thomas Kerlin, The University of Tennessee
Charles Mayo, North Carolina State University
Robert Weingard, Philadelphia Electric
J. M. Weiss, Electric Power Research Institute

Presentations were made by R. L. Shepard of Oak Ridge National Laboratory on the pressure sensor program performance criteria and assessments and by Marcia Katz of The University of Tennessee on studies of resistance temperature detector (RTD) drift.

Along with other comments, the advisory group recommended:

"Choose a sensor that doesn't need filling fluid, move the signal processor away from the sensor outside the containment, the best sensor has the fewest moving parts" (Bockhorst); "Keep it simple" (Bradley); "LVDT is an old technology used with success, concern with distance between sensor and electronics, quartz sensor sounds good, need to fix the Rosemount transmitter" (Belew); "The Kaman sensor looks simplest and has no solid-state circuitry in the sensor, methodology is needed for detecting failures, on-line validation" (Weingard); "Fiber optics looks best, the Rosemount transmitter needs a large reservoir of oil" (Fromberg); need better analysis of the Rosemount performance data, better use of signal analysis and smart sensors" (Nelson); "Try to introduce perturbations into the plant processes to exercise pressure sensors and detect failures, the Metricor (PS-1) pressure sensor is simple and good" (Uhrig); "Fix the Foxboro transmitters" (Norris); "Provide backfit devices that work with existing control systems and data highways, fix the existing Rosemount sensors, use the silicon and quartz technology for best improvement of pressure sensors, develop smart sensors for the future" (Mayo). In general, these comments suggest fixing the existing Rosemount gauge, augmenting it with the simplest gauge structure possible, avoid filling fluid designs, consider fiber-optic sensors, remote the signal processing from the sensor, develop methods for detecting degradation or failure, and develop smart sensors.

The group provided valuable discussion of the applicability of the results of this study to practical applications in electric power plants and thereby pointed out a suitable direction for the evaluations presented in this report, for which the authors are grateful.

3.6 REFERENCES

1. G. Blasquez, P. Pons, and A. Boukabache, "Capabilities and Limits of Silicon Pressure Sensors," *Sensors and Actuators* **17**, 387–403 (1989).

2. Wen H. Ko, "Solid State Capacitive Pressure Sensors," *Sensors and Actuators* **10**, 303–320 (1986).

3. A. Hanneborg and P. Ohlckers, "A Capacitive Silicon Pressure Sensor with Low TCO and High Long Term Stability," *Sensors and Actuators* **A21–A23**, 151–154 (1990).

4. A. Jornod and F. Rudolf, "High-Precision Capacitive Absolute Pressure Sensor," *Sensors and Actuators* **17**, 415–421 (1989).

5. Kurt Petersen et al., "Ultra-Stable, High-Temperature Pressure Sensors Using Silicon Fusion Bonding," *Sensors and Actuators* **A21-A23**, 96–101 (1990).

6. Christel Lee et al., "Single-Crystal Silicon Pressure Sensors with 500 X Overpressure Protection," *Sensors and Actuators* **A21–A23**, 84–88 (1990).

7. E. Obermeier et al., "Characteristics of Polysilicon Layers and Their Applications in Sensors," *Tech. Digest*, IEEE Solid State Sensor Workshop, Hilton Head Island, S.C., June 6–9, 1988.

8. N. E. Samek and M. Mei, "Diffused Silicon Wet/Wet Differential Pressure Sensor and Transducer for Minus 100 to Plus 120°C," *Sensors and Actuators* **A21–A23**, 155–158 (1990).

9. R. Schorner, M. Poppinger, and J. Eibl, "Silicon Pressure Sensor with Frequency Output," *Sensors and Actuators* **A21–A23**, 73–78 (1990).

10. S. Sugiyama et al., "Integrated Piezoresistive Pressure Sensor with Both Voltage and Frequency Output," *Sensors and Actuators* **4**, 113–120 (1983).

11. Kyoichi Ikeda et al., "Silicon Pressure Sensor Integrates Resonant Strain Gauge on Diaphragm," *Sensors and Actuators* **A21–A23**, 146–150 (1990).

12. J. A.Voorthuyzen and P. Bergveld, "The PRESSFET: An Integrated Electret-MOSFET Based Pressure Sensor," *Sensors and Actuators* **14**, 349–360 (1988).

13. Y. Kanda and A. Yasukawa, "Hall-Effect Devices as Strain and Pressure Sensors," *Sensors and Actuators* **2**, 283–296 (1982).

14. J. W. Berthold, W. L. Ghering, and D. Varshneya, "Design and Characterization of a High-Temperature, Fiber-Optic Pressure Transducer," *IEEE J. of Lightwave Technology* **LT-5**(7), 1–6 (July 1987).

15. S. W Allison et al., "Fiber Optic Schemes for Fast-Response Pressure Sensing," *Proc. SPIE* **987**, 20–28 (September 1988).

16. Y. N. Yang et al., "A Systematic Classification and Identification of Optical Fibre Sensors," *Sensors and Actuators* **A29**, 21–36 (1991).

17. C. R. Tallman, F. P. Wingate, and E. O. Ballard, "Fiber-Optic Coupled Pressure Transducer," *ISA Trans* **19**(2), 49–53 (1980).

18. J. P. Herzog, P. Roth, and P. Meyrueis, "Optical Fiber Flowmeter with Temperature Correction," *Sensors and Actuators* **A25–A27**, 219–223 (1991).

19. W. J. Bock et al., "Development of a Polarimetric Optical Fiber Sensor for Electronic Measurement of High Pressure," *IEEE Trans. on Instru. and Measur.* **39**(5), 715–721 (October 1990).

20. P. Ferdinand et al., "The Potential for Distributed Sensors and Optical Fibre Sensor Networks in the Electrical Power Industry," *Measurement Science and Technology* **1**, 908–916 (1990).

21. J. Weiss, W. Esselman, and R. Lee, "Assess Fiberoptic Sensors for Key Powerplant Measurements," *Power*, 55–58 (October 1990).

22. Merlin E. Yancey, "Design and Evaluation of a Pressure Sensor for High Temperature Nuclear Application," EGG-Idaho, Inc., EGG-2135, November 1981.

23. T. R. Billeter, *Summary Report of Pressure Sensor for Loss of Fluid Test (LOFT) Reactor*, U.S. Nuclear Regulatory Commission, Washington, D.C., Hanford Engineering Development Laboratory, NUREG/CR-1720, HEDL-TME 80-53, February 1981.

24. L. H. Thacker, *High Temperature Pressure Transducer (Mk I)*, Los Alamos, N.M., Los Alamos Scientific Laboratory, LA-2727, September 1962.

25. G. J. Twa, *Sodium Pressure Measurement System Development Status Report*, Energy Technology Engineering Center, Rockwell International, ETEC-8417, September 1984.

26. T. Ueda, K. F. Kohsaka, and E. Ogita, "Precision Force Transducers Using Mechanical Resonators," *Measurement* **3**(2), 89–94 (June 1985).

27. M. R. Risch, "Precision Pressure Sensor Using Quartz SAW Resonators," *Sensors and Actuators* **6**, 127–133 (1984).

28. L. C. Lynnworth, *Ultrasonic Measurements for Process Control: Theory, Techniques, and Applications*, Academic Press, San Diego, 1989.

29. P. Diodati, "Ultrasonic Method for Static Pressure Measurement," *Rev. Sci. Instrum.* **57** (2), 293–295 (February 1986).

30. L. C. Lynnworth, personal communication.

31. B. Dooley, "New Applications of Phosphor-Based Sensors," *EPRI Exploratory Research Letter* 10, pp. 7–8, February 1992.

32. W. D. Drotning and H. G. Drickamer, "High-Pressure Optical Studies of Doped Alkali Halides. I. Peak Shifts and Peak Shape Changes," *Phys. Rev. B* **13**(10), 4568–74 (May 1976).

33. D. M. Adams, R. Appelby, and S. K. Sharma, "Spectroscopy at Very High Pressures, Part X, Use of Ruby R-lines in the Estimation of Pressure at Ambient and at Low Temperatures," *J. Physics E* **9**, 1140–44 (1976).

34. J. E. Whitmore, C. L. Bruzzone, and R. Ingalls, "Automated Spectrometer for Pressure Measurement Using Ruby Fluorescence," *Rev. Sci. Instrum.* 53(10), 1602–03 (October 1982).

35. Gilbert R. Haugen, "Remote Measurement of Pressure in Shock Wave Environments Using Fiber Optic Sensors," UCID 20922, Proposal, Lawrence Livermore National Laboratory, Nov. 12, 1986.

36. Y. Hibino and H. Hanafusa, "Stress-Induced Photoluminscence in Pure Silica Optical Fibers," *J. Non-Crystalline Solids* **107**, 23–26 (1988).

37. Timothy P. Beales and Colin H. L. Goodman, "Effect of Pressure on the Luminescence of $CaWO_4$:Nd," *High Temperatures and Pressures* **21**, 227–231 (1990).

38. M. Ayub, C. Spooner, and B. E. Jones, "Measurement of the Temperature Dependency of the Stress-Optic Coefficient of Photoelastic Materials," *Inst. Phys. Conf. Series No. 111* (1990).

39. Y. M. Gupta and X. A. Chen, "Potential Use of the Ruby R_2 Line Shift for Static High-Pressure Calibration," *Appl. Phys. Lett.* **58**(6), 583–85 (February 1991).

40. J. V. McAllen, "The Effect of Pressure on the Water Triple-Point Temperature," *Temperature* 5(1), 285–289 (1982).

41. J. Lusk, "Calibration of Gas Pressure Using the Mercury Melting Curve in Conjunction with Eutectic Ice-Salt Mixtures," *Measurement Science & Technology* 1(9), 852–56 (September 1990).

42. J. Strong, *Procedures in Experimental Physics*, pp. 138, 148, Prentice Hall, New York, 1938.

4. CONCLUSIONS AND RECOMMENDATIONS

This study leads to several conclusions that address different requirements and development scenarios. The problems facing the electric power industry can be divided into immediate and long term. The immediate problems can be addressed by (1) correcting the design problems in the existing, otherwise adequate pressure transducers; (2) identifying and qualifying existing commercial devices to replace the installed transducers; or (3) developing new designs based on existing and well-known technologies to replace the installed transducers. To address the long-term problems properly, entirely new concepts for pressure sensing, transduction, and transmission should be developed and implemented as the next generation of truly modern, computer-compatible pressure transmitters. Given some limitation on the resources that are available to support this program of pressure sensor upgrade, the advantages and limitations of existing and innovative technology should be balanced against the desired benefits and a realistic estimate of the possibilities of developing attractive concepts into usable products. These considerations form the basis for the evaluations presented in Table 3.3. The factual basis for this process is described in the following paragraphs.

4.1 POSSIBLE SOLUTIONS FOR PRESENTLY INSTALLED TRANSMITTERS

Widely used pressure transmitters from several manufacturers have shown tendencies to leak filling fluid. One of these, the Rosemount Model 1154, except for its propensity to leak the filling fluid, is an excellent pressure transmitter for nuclear power plant applications. Leakage has been experienced in approximately 3% of installed Rosemount transmitters; expensive periodic transient testing is therefore necessary since leakage of the fill fluid affects the response time and dynamic range adversely and the leakage is not detectable in its early stages by observation during steady-state operation. Rosemount's analysis of the problem concludes that the defect is random rather than production-batch specific, and they believe that appropriate design changes that they are instituting will eliminate the problem. If Rosemount does, in fact, correct the design, manufacturing, or installation flaw that allows oil leakage, the immediate pressure sensing problem can be considered resolved. However, this only provides a time buffer that allows development and qualification of the next generation of pressure sensors to proceed in a rational rather than a panic mode.

4.2 POSSIBLE EXISTING REPLACEMENTS

Any new transmitter type that requires fluid isolation from the process liquid should, in principle, be examined for the possibility of fill fluid leakage with the attendant time response distortions. If otherwise satisfactory alternate types require fluid-filled isolation, the best solution may well be to correct the leakage problem in the Rosemount transducers and continue to use them while initiating a program to develop and qualify a satisfactory wet/wet transducer not requiring such fluid isolation.

Five available (conventional) nuclear qualified pressure transmitters and one promising potentially qualifiable transmitter are described in detail in Figs. A.1 to A.5 in Appendix A. All gauges feature oil-filled isolation from the process fluid except the Weed NE-10 Series

force balance transducers (formerly produced and sold by Foxboro). At this time, it is unclear as to the extent of the oil leakage problem among other items in this group of transmitters.

4.3 PROMISING TECHNOLOGIES FOR DEVELOPMENT OF NEW DESIGNS

Pressure transducers employing some possible alternate measurement technologies are described and evaluated in detail in Figs. B.1 to B.10 (Appendix B) and in Table 3.3. This examination and comparison allows some conclusions with respect to the potential of the technologies in the development of new designs, as described in the following sections.

4.3.1 Shear-Mode Quartz Resonance Technology

A down-hole pressure transducer manufactured by Quartzdyne, Inc., for oil field exploration (Fig. B.6) uses shear-mode quartz resonance technology to provide an instrument with exceptional accuracy and ruggedness. The pressure sensor is a hollow, machined, single-crystal quartz resonator that changes its frequency of resonance as a function of applied pressure and retains the repeatable performance inherent in single-crystal quartz. A quartz resonator temperature sensor provides digital temperature compensation over the calibrated range and a measurement of the sensor temperature. Since the temperature and reference signals are all quartz crystal vibration frequencies, many of the problems associated with the transmission and acquisition of analog signals are eliminated. Present implementations of the technology allow only absolute pressure measurements, and it may be difficult or impractical to develop differential pressure transducers; however, this technology offers the most promising developmental approach to a superior new nondifferential transducer for extreme conditions in power plant service. Nuclear qualification would be necessary for nuclear applications.

A closely related technology, represented by the Kollsman Standing Acoustic Wave Resonant Pressure Sensor, shown in Fig. B.8 and Table 3.3, is judged to offer a significantly lower potential for useful development, judging its design to be less rugged and more susceptible to vibration than the Quartzdyne device.

4.3.2 Ultrasonic Technology

Some variations of the ultrasonic technology described in Fig. B.9 offer developmental possibilities for noninvasive measurement of both pressure and temperature. Since ultrasonic devices tend to be application specific, a development program would be necessary to properly evaluate their applicability to power plant pressure and flow measurement problems. Ultrasonic techniques are not amenable to differential pressure measurements, but both flow and level (which are often measured by differential pressures) can be measured directly using ultrasonics.

4.3.3 Variable Reluctance or Eddy-Current Technology

Variable reluctance or eddy-current technology, as exemplified in the Kaman Model KP-2025 pressure measurement system (Fig. B.5), is a more promising technology for developing wet/wet differential pressure transducers that does not require fluid isolation from process fluid. This transducer is very similar to a variable reluctance sensor described in a

DOE publication[1] of November 1981, which may well have been an example of DOE technology transfer. Although the KP-2025 is a single-sided pressure transducer, the technique is easily amenable to differential designs. Closely related to the variable reluctance and eddy-current devices are linear variable differential transformers (LVDTs), which are also inherently amenable to nonisolated, differential pressure designs. It is highly likely that nuclear qualified devices could be developed by extrapolation of basic designs of gauges such as the Lucas Shaevitz wet/wet commercial differential pressure transducers. High-quality signal conditioning and transmission systems for transducers of this type are commercially available. These technologies are evaluated to offer the most direct route to short-term development of satisfactory alternative nuclear-qualified single-sided and differential pressure transducers.

4.3.4 Silicon Technology

The many variations of silicon micromachined sensor technology are covered in considerable detail in Sect. 3 under the heading "Silicon Pressure Sensors." Three specific examples—the commercially available Gulton Servonics silicon-film strain gauge Model 3588-42 single-sided pressure transducer, the near commercially available CEC/IMO wet/wet silicon piezo-resistive differential pressure transducer, and the developmental Lucas NovaSensor fusion-bonded single-crystal pressure sensor—are shown in Figs. B.2 to B.4 (Appendix B). A very large fraction of the new commercial offerings in high-quality pressure transducers is based on silicon technology. Many transducers are already qualified for aerospace applications and should be examined for potential nuclear qualification. The three examples noted here reflect three different stages of development, and one (the CEC/IMO) offers differential pressure measurement, possibly without a requirement for process fluid isolation. It is noted, however, that silicon oxide passivation of silicon devices will not be compatible with high-temperature water and that some isolation may be required. The silicon technologies offer the highest promise for high-quality transducers at moderate-to-low prices.

4.3.5 Fiber-Optic Technology

Fiber-optic technology and its applications to pressure measurement have been discussed in some detail in Sect. 3 under the heading "Fiber-Optic Pressure Sensors." The only known commercial fiber-optic pressure sensor, the Metricor ColorOptic Fabry-Perot pressure probe, is summarized in Fig. B.1 and in Table 3.3. The ColorOptic is a hybrid, "near-intrinsic" sensor that measures pressure by measuring the change in the ratio of energy in two adjacent wavelength bands as the optical resonance of a microcavity is changed by pressure displacement of the distal face of the cavity. The wavelength ratio method makes this transducer nearly independent of the cable and connector attenuation effects that plague many analog signal transmission systems. The technique is very creative and effective, and small variations in the sensor design permit measurements of temperature and refractive index as well. While the sensor temperature is limited to 570°F, note that the reference Rosemount 1154 is limited to only 220°F. Pressure measurements are limited to absolute pressures, as are almost all of the developmental fiber-optic techniques. Developmental extrapolations of the Metricor techniques should produce pressure sensors useful for some applications in fossil and nuclear power plants.

Recent information has been obtained from Optofra Division de Framatome in France which implies commercial availability of fiber-optic sensors for pressure, temperature, level, flow, and speed. They also show a fiber-optic system layout that features a central processing

unit and optical rack based on time and wavelength division multiplexing that serves 128 fiber-optic sensors in 16 subgroups of eight sensors each. They quote the maximum switching frequency per sensor as 200 Hz to 20 kHz, depending on system layout.

While fiber-optic technology represents the least mature of the pressure measuring techniques, it offers the greatest conceptual possibilities for a radical new generation of pressure sensors and for new and effective methods of power plant instrumentation and control. It has particular advantages in reduction of electromagnetic/radio-frequency interference, in reduction of cabling requirements, and in increased sensor coverage and redundancy due to small sensor size and low costs. The problems of practical utilization, conversion of optical to electrical signals, and process compatibility and ruggedness need concerted attention before fiber-optic pressure transmitter use is widespread in power plants.

4.3.6 Nonquartz Resonant Structure Technology

This technology is exemplified in this study by the Yokagawa double-ended tuning fork mechanical resonator which forms the basis for Yokagawa's Type 2655 and 2661 high-precision, high-accuracy digital pressure transmitters (Fig. B.7 and Tables 3.3). The technology appears to offer high potential for development of absolute and gage pressure transducers, with somewhat lower potential for differential pressure transducers. Pressure and temperature ranges for existing models are quite limited, but development effort should extend these ranges. Note that this gauge uses another frequency measuring technique that is inherently free of many of the problems of analog data transmission.

4.4 TECHNOLOGIES FOR LONG-TERM SOLUTIONS

Although fiber-optic technology has been addressed above as an interim solution for pressure measurement, it is very close to the status of a "new" technology requiring extensive development and implementation work but promising to revolutionize the field in the long term. Accordingly, the main thrust of long-term development support should be to the fiber-optic area in an attempt to translate fiber-optic potentials to reality.

A possible, but much less accessible new technology is in the area of fluorescence decay-time pressure sensing technology (Fig. B.10 and Table 3.3.). With presently identified materials, the lower pressure limit is about 10,000 psi, and the technique is uniquely applied to superpressure diamond anvil processes. It is intrinsically an absolute pressure measuring technique and would have limited usefulness in any foreseeable applications in power plants in its present form.

As noted at the beginning of this section, the search for long-term solutions to fossil and nuclear power plant pressure measurement problems (and instrumentation and control problems in broader generality) must include the search for new concept technologies and/or new application concepts of known technologies. Accordingly, some research and development support should be provided by this program for long-range investigations to explore conceptually promising fields.

4.5 SUMMARY

The conclusions of this section can be summarized in the following recommendations:

1. As a solution to the immediate problem of pressure measurements in power plants, modify the Rosemount Model 1154 design as required to eliminate the oil leakage and continue to use this superior transmitter.

2. As an alternative solution in the short term, extrapolation of some existing variable reluctance or LVDT designs to meet the requirements of fossil and nuclear power plant operation offers a rapid route to nonisolated, wet/wet pressure and differential pressure transducers.

3. For midterm applications involving integration of pressure sensing with distributed (digital) control systems—particularly in fossil or nuclear balance-of-plant use—silicon-integrated pressure sensing is extremely attractive.

4. For the long term, development of fiber-optic pressure sensors and the associated data transmission and control systems for fossil and nuclear power plants should be supported by the electric power industry.

4.6 REFERENCES

1. Merlin E. Yancey, *Design and Evaluation of a Pressure Sensor for High Temperature Nuclear Application*, Idaho Falls, Idaho, EG&G Idaho, Inc., EGG-2135, November 1981.

5. ACKNOWLEDGMENTS

Special appreciation is expressed to Joseph M. Weiss, Electric Power Research Institute project manager, for his support and contributions to the discussion. Additional acknowledgment is offered for the members of the industry/university project review panel. Efforts of K. G. Young in the early phase of the investigation, R. C. Kryter and C. W. Ricker in reviewing the manuscript, Kathy McIntyre in typing the manuscript, and the personnel of the Publications Division are also appreciated.

BIBLIOGRAPHY

Dabkiewicz, P., and K. Jansen. "Fiber-Optic Pressure Sensor Using Birefringence in Side-Hole Fiber." *Fibre Optics '87: Fifth International Conference on Fibre Optics and Opto-Electronics. SPIE* **734** (1987): pp. 202–206.

Dakin, J. P., C. A. Wade, and P.B. Withers. "An Optical Fibre Pressure Sensor," *Fibre Optics '87: Fifth International Conference on Fibre Optics and Opto-Electronics. SPIE* vol. **734** (1987): pp. 194-201.

Delcher, R., D. Dinnsen, and S. Barkhoudarian. "Fiber Optics in Liquid Propellant Rocket Engine Environments," Paper 1369-14.

Farmer, Ed., "Making Pressure Measurements" *Instruments and Control Systems* (May 1981): pp. 75–80.

Foster-Miller, Inc. "Fiber-Optic Sensing Workshop." Palo Alto, Calif.: Electric Power Research Institute. *Proceedings*. (October 1989) EPRI ER-6537 .

Giallorenzi, T. G., et al. "Optical Fiber Sensor Technology." *IEEE Journal of Quantum Electronics* **QE-18**(4) (1982): pp. 626–665.

Gustafsson, K., and B. Hok. "A Fiber Optic Pressure Sensor in Silicon Based on Fluorescence Decay." *Sensors and Actuators* **19** (1989): pp. 327–332.

Haiming, Xie. "Birefringent Fiber Optic Pressure Sensor with High Sensitivity." *Chinese Physics* **9** (3) (July–Sept. 1989): pp. 843–847.

Hall, James E. "Silicon Sensors Upgrade Pressure Measurements." *Intech* (July 1991): pp. 32–33.

Hane, K., Y. Inahara, and T. Goto. "A Remote Pressure Sensing Technique by Using the Photothermal Bending Effects." *Rev. Sci. Instrum.* **61** (10) (October 1990): pp. 2691–2695.

IEEE Standard Dictionary of Electrical and Electronic Terms. Fourth Edition. New York: Institute of Electrical and Electronic Engineers, Inc., November 1988, ANSI/IEEE Std 100-1988.

Jackson, D. A. "Overview of Fibre Optic Interferometric Sensors." *Fibre Optic Sensors.* IOP Short Meetings, IOP Publishing Ltd. (1987).

Kersey, A. D., F. Bucholtz, and A. Dandridge. "Sensor Technology: Fiber-Optics." *Fiber Optics Engineering: Processing and Applications* 258 **83** (1987): 58–67.

Lawless, W. N., C. F. Clark, and G. A. Samara. "Quantum-Ferroelectric Pressure Sensor for Use at Low Temperatures." *Rev. Sci. Instrum.* **56** (10) (October 1985): pp. 1913–16.

Merritt, R. "Keeping up with Pressure Sensors." *Instruments and Control Systems* (April 1982): pp. 43–48.

Ormond, T., ed. "Pressure Sensors and Transducers." *EDN* (August 4, 1988): pp. 107–118.

Oscroft, G. "Intrinsic Fibre Optic Sensors," *Fibre Optics '87: Fifth International Conference on Fibre Optics and Opto-Electronics. SPIE* vol. 734 (1987): pp. 207–213.

Pressure, Strain, and Force Measurement Handbook and Encyclopedia, Stamford, Conn.: OMEGA Engineering, Inc., 1987.

Stemme, Goran. "Resonant Silicon Sensors." *J. Micromechanics and Microengineering* **1** (1991): pp. 113–125.

Stockdale, R. B., "Advanced Pressure Sensor Designs Benefit Control Systems," *Control Engineering* (June 1991): pp. 58–61.

Tinham, Brian, "What's Behind Your Pressure Transmitters?" *Control and Instrumentation* (November 1991): pp. 70–72.

Vincent, D. R., and Ross, J. N. "An All-Optical Single-Fiber Micromachined Silicon Resonant Sensor: Towards a Commercial Device." *Sensors and Actuators* **A25–A27** (1991): pp. 209–212.

Waterbury, R. C. "Transmitters Face Market Pressures," *InTech* (July 1992): pp. 26–29.

Appendix A:

CONVENTIONAL PRESSURE TRANSMITTER EXAMPLES

ROSEMOUNT DELTA CELL™
CAPACITIVE PRESSURE TRANSMITTER

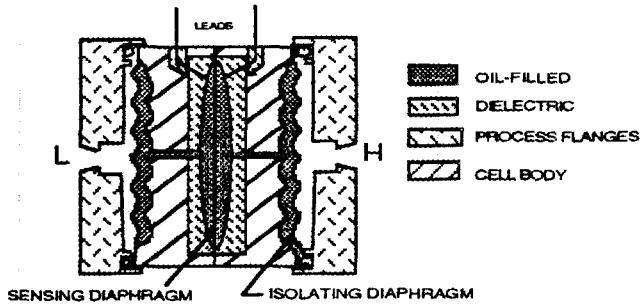

Description

The Rosemount Model 1154 nuclear-grade oil-filled capacitively sensed diaphragm deflection pressure transmitter—gauge, absolute or differential—isolates the process fluid from the sensor by a compliant isolating diaphragm. A silicone oil that fills both sides of the gauge cavity transmits the deflection of the isolating diaphragm to the stiff sensing diaphragm causing it to deflect slightly—thousandths of an inch or less. This deflection is sensed by the change in capacitance between the metal sensing diaphragm and a metallized layer on the concave inner surface of an insulating material surrounding the sensing diaphragm. The change in capacitance is measured by electronics mounted above the gauge block. The oil must be dielectric to avoid shorting out the capacitance between the diaphragm and the metallized layer. When the gauge is over-pressured, the sensing diaphragm is restrained by the concave insulator and the isolating diaphragm by a pattern embossed on the facing surface of the cell body.

Best Features: Ruggedness, sensitivity, simplicity, extensive experience in powerplant use, availability as nuclear qualified units. Smart signal processor for Model 1151.

Worst Limitations: Leakage of filling oil from the sensing cavity through the lead wire penetrations may create longer response times, which may not be apparent until the gauges are tested. Rather low temperature limit on delta-cell: 220°F

Key Specifications

Accuracy:	±0.25% FS	Overpressure:	to 3000 PSI
Stability:	±0.25%	EMI/RFI:	Excellent to 30 V/M
Sensor Response Time:	0.2 -0.5 s	Vibration:	Excellent to 7 g's
Pressure Limits:	3000 psi	Radiation	100 MRads (?)
Sensor Temp. Limits:	220°F	Reliability	Needs improvement

Development Status: This family of pressure transmitters provides a combination of ruggedness, simplicity, and sensitivity that has made it one of the most widely used gauges in the power industry. It is a mature product.

Potential for Development: A built-in reference pressure response-time sensor could eliminate much of the response time uncertainty related to oil loss, but would add some additional complexity to the signal processor. Need to apply smart signal processor to nuclear-grade Model 1154.

Fig. A.1. Conventional Pressure Transmitter, Item PS-01.

ITT BARTON SILICON STRAIN GAUGE PRESSURE TRANSMITTER

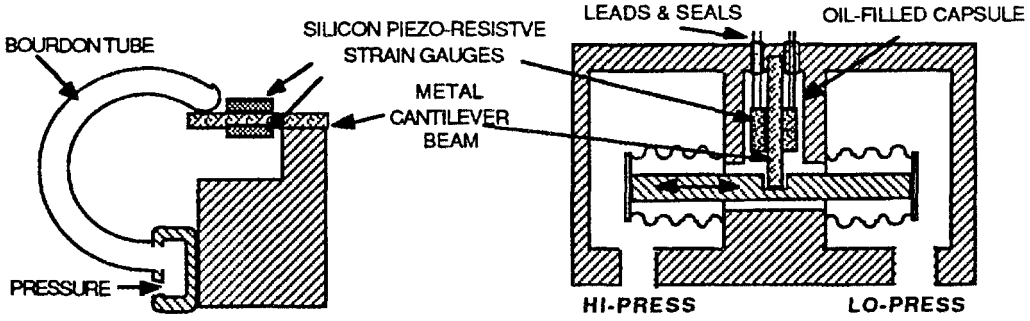

MODEL 763 GAGE PRESSURE

MODEL 764 ΔP GAUGE

Description: Three models on the market use similar technology and have been qualified for nuclear service: Model 763 , a gauge pressure transmitter; Model 764 a high-range differential pressure gauge(ΔP) transmitter; and Model 765 a low-range high-sensitivity ΔP differential pressure transmitter. Each of these apparently uses a fluid-filled isolator to separate process fluids from the sensing elements. Model 763 uses a bourdon tube to sense pressure and a silicon piezo-resistive strain gauge to sense the bourdon tube deflection. Model 764 use two piezo-resistive strain gauges to sense the position of a metal beam that is deflected by two bellows. This gauge is intended for feedwater, steam, and coolant flow, and level indication up to 300 psid. Model 765 uses a single bellows, a metal beam, and two piezo-resistive strain gauges in a bridge circuit. It is designed for gas and air flow measurements up to 10 in. w.c.

Best Features: Designed for ruggedness, long life, extremes of qualification, wide coverage of pressure ranges, and reasonable accuracy. Claim a 200 MRad gamma dose tolerance.

Worst Limitations: Somewhat larger drift and larger temperature compensation required than others claim.

Key Specifications

Accuracy:	0.5% FS	Overpressure:	150% or 3000 PSI
Stability:	Not given	EMI/RFI:	Not given
Sensor Response Time:	180 ms	Vibration:	Not given
Pressure Limits:	3000 psi	Radiation:	200 MRad (gamma)
Sensor Temp. Limits:	320°F	Reliability:	40 year qual. life

Development Status: This family of pressure transmitters provides a selection of similar designs that cover three major applications in power plants, using silicon strain gauge technology. A mature product. Complete nuclear IE, IEEE 323, and seismic qualification has been performed.

Potential for Development: No mention is made of smart aspects of the transmitter, which could be developed. Possibilities of leakage of fluid and its detection are not addressed. No specifications are provided for vibration effects, but are not expected to be large.

Fig. A.2. Conventional Pressure Transmitter, Item PS-02.

CAMILLE BAUER FILM STRAIN GAUGE PRESSURE TRANSMITTERS

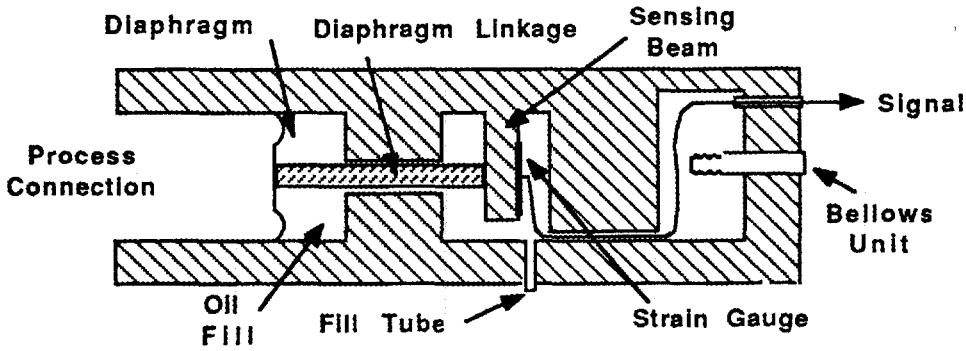

Description

Two basic sensors (32 DP and 32 PG/PA) and two levels of nuclear qualification (-P1 and-P2) of transmitters are on the market and use similar technology. The 32DP are differential pressure and the 32 PG/PA are gage or absolute pressure instruments. The gauge uses a vacuum-deposited (presumably metal) thin-film strain gauge. The primary sensing element is protected by silicone oil and the differential pressure capsule is oil-filled and hermetically sealed "thus assuring long life and high reliability." The P2 qualification withstands 68 MRads and 216°C while the P1 level withstands 10 MRads and 121°C service. Units are qualified to IEEE 323 and 344, and NUREG 0588. This gauge was formerly manufactured by Tobar, Veritrak, and Westinghouse.

Best Features: Designed for ruggedness, long life, extremes of qualification, wide coverage of pressure ranges, and reasonable accuracy.

Worst Limitations: Somewhat larger drift and larger temperature compensation required than others claim.

Key Specifications (for Gage or Absolute)

Accuracy:	0.2% FS	Overpressure:	1.5x or 3600 PSI
Stability:	Not given	EMI/RFI:	adequate
Sensor Response Time:	200 ms	Vibration:	Not given
Pressure Limits:	6000 psi	Radiation	68 MRad(γ)
Sensor Temp. Limits	120°C	Reliability	Not given

Development Status: This family of pressure transmitters provides a selection of similar designs that cover three major applications in power plants, using silicon strain gauge technology. A mature product. Complete IE, IEEE 323 and seismic qualification has been performed. No other unusual capabilities.

Potential for Development: No mention is made of smart aspects of the transmitter, which could be developed. Possibilities of leakage of fluid and its detection are not addressed. No specifications are provided for vibration effects, but are not expected to be large.

Fig. A.3. Conventional Pressure Transmitter, Item PS-03.

HONEYWELL SILICON PIEZO-RESISTIVE PRESSURE TRANSMITTERS ST 3000

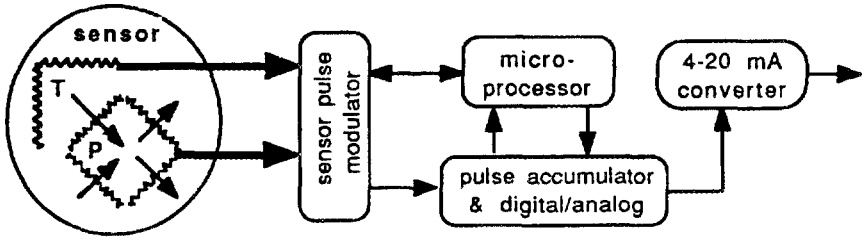

Description

The sensing portion of the gauge is a silicon substrate with embedded contacts for two piezoresistive sensors that form arms of a bridge circuit. Additional contacts provide temperature sensing. The process pressure interface is not described except that a filling oil or fluorocarbon fluid is used. The prominent unconventional feature of the pressure channel is a digital-processed smart transmitter and field communicator that can replace the 4-20 mA DC output and provide intercommunication between the pressure unit and the operator for remote control of the transmitter.

Best Features: Smart transmitter provides on line diagnostics, remote interrogation and alignment, etc. Sensor uses embedded-channel silicon piezoresistive substrate for excellent temperature compensation. Higher accuracy claimed than most similar gauges. Very high ranges for gage, absolute, and differential pressures;

Worst Limitations: Requirement for a buffer fluid to isolate sensor from process fluid.

Key Specifications

Accuracy:	0.08% FS	Overpressure:	900 PSI
Stability:	0.25%/yr (DP)	EMI/RFI:	adequate
Sensor Response Time:	250 ms	Vibration:	Not given
Pressure Limits:	3000 psi	Radiation	up to 1 MRad(γ)
Sensor Temp. Limits	110°C	Reliability	360 yr MTBF

Development Status: This family of pressure transmitters provides a selection of ranges using common silicon piezo-resistive technology. A mature product. Complete nuclear IE, IEEE 323, and seismic qualification has not been performed.

Potential for Development: Possibilities of leakage of fluid and its detection are not addressed. No specifications are provided for vibration effects, but are not expected to be large.

Fig. A.4. Conventional Pressure Transmitter, Item PS-04.

FOXBORO RESONANT WIRE PRESSURE GAUGE

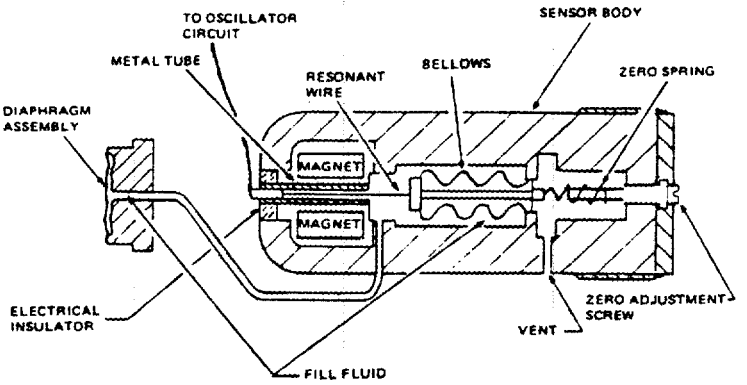

Diagram of 821GM Sensor Assembly © The Foxboro Company,1988

Description

The Foxboro N-820 Series is a nuclear-qualified family of absolute, gage, and differential pressure transmitters that use a resonant wire to sense the force produced on a diaphragm by an external pressure. The resonant frequency of the wire suspended in a magnetic field is converted in an oscillator circuit to a dc output signal. The internals of the gauge are oil filled. Several material options are available for the pressure sensing diaphragm and the process-wetted parts of the gauge. Smart sensor options are available on non-nuclear models.

Best Features: Resonant wire design provides superior accuracy and long-term stability. Differential pressure gauge design provides static pressure limits of 3000 psi. A 35-yr MTBF reliability is claimed. A drift rate of 0.1%of FS in 6 months is smaller than other manufacturers claim. Excellent RFI tolerance.

Worst Limitations: Time response of 500 ms for gage pressures is longer than most comparable gauges and too long for some safety system applications.

Key Specifications (for Gage or Absolute Pressures)

Accuracy:	±0.2% FS	Overrange pressure limit : 9000 psi (Gage), 900 psi (Absolute)	
Stability:	0.1% per 6 months	EMI/RFI:	20 V/m @ 27-500MHz
Sensor Response Time:	500 ms	Vibration:	±0.1%FS @ 3G to 200 Hz
Pressure Range Limits:	6000 psi	Radiation:	Not given
Sensor Temp. Limits:	180°F	Reliability:	35 yr MTBF

Development Status: Fully developed commercial product, which has replaced the force balance transmitters previously provided. That product is now marketed by Weed Instruments (See PS-06)

Potential for Development: Effects of filling fluid leakage need to be addressed. Methods for in situ calibration and in situ response time testing need to be provided. Response time of gauge and absolute transmitters should be reduced for nuclear safety applications.

Fig. A.5. Conventional Pressure Transmitter, Item PS-05.

WEED (FOXBORO) FORCE BALANCE PRESSURE TRANSMITTERS

SIMPLIFIED DRAWING

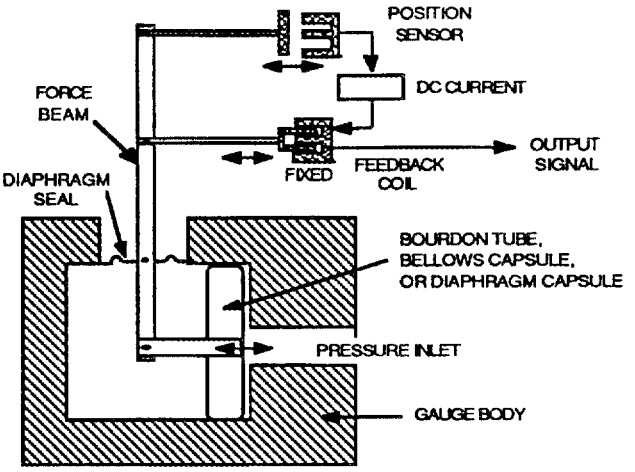

Description Models NE-11 and NE-13 use a similar technique for sensing the deflection of a bellows, diaphragm, or bourdon tube with a force beam and an inductive armature detector. The deflection of the beam is restored to a null position by a feedback coil, whose restoring current provides the pressure-indicating signal. Absolute, gage, and differential models are available.

Best Features: High overpressure (to 9000 psi) and gamma dose (200 MRad) with differential pressures as low as ±25 in w.c. full scale and gage pressures as high as 6000 psi. Extensive IEEE 323, IEEE 344, and IE qualification, but limited to 20 yr life. Suitable for in-containment, safety-related applications. Basic gauge appears not to be oil-filled. Suitable for in-situ time response using power interrupt technique.

Worst Limitations: Mechanical design may limit vibration tolerance and is not conducive to digital signal or remote alignment.

Key Specifications (for Gage or Absolute Pressures)

Accuracy:	0.5 to 1.25% FS	Overpressure:	to 9000 PSI
Stability:	Not given	EMI/RFI:	Not given
Sensor Response Time:	Not given	Vibration:	Not given
Pressure Limits:	6000 psi	Radiation:	200 MR
Sensor Temp. Limits	216°C (DBE)	Reliability:	high

Development Status: This product line is mature and traditional, sold by Foxboro to Weed, and replaced by Foxboro with a new series N-820 which has not been qualified yet for safety-related nuclear service.

Potential for Development: Very little likelihood of any major development effort based on this measurement principle.

Fig. A.6. Conventional Pressure Transmitter, Item PS-06.

Appendix B:

INNOVATIVE PRESSURE GAUGE CONCEPTS

METRICOR FIBER-OPTIC COLOROPTIC™ FABRY-PEROT PRESSURE SENSOR

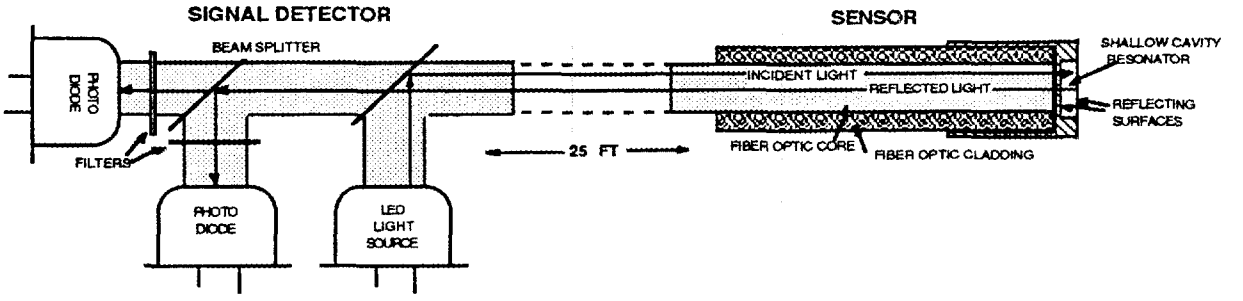

Description

The sensor is a tiny Fabry-Perot interferometer mounted on the end of a fiber optic cable. It is excited by a relatively narrow wavelength band of light from a light-emitting diode. Pressure on the outer surface of the hollow, shallow cavity changes the tuning of the cavity, and thereby affects the spectral distribution of light reflected from the cavity to the signal detector. The reflected light is then analyzed in two wave length bands to provide a signal that is proportional to the ratio of the two color intensities. This ratio is affected by the external pressure, the displacement of the diaphragm , and the tuning of the Fabry-Perot cavity. Losses in the fiber optic lines are compensated (if they are "grey") by the two-color ratio method. While not a high accuracy device (~0.5%), it is capable of 0.1 psi pressure resolution.

Best Features: EMI/RFI immunity and extremely small size of the immersion sensing element <0.063 in. OD.

Worst Limitations: Provides only absolute pressures; differential pressures would require two sensors.

Key Specifications

Accuracy:	±0.5% FS	Overpressure:	3000 psi
Stability:	not known	EMI/RFI:	excellent
Sensor Response Time:	<100 ms	Vibration:	probably good
Pressure Limits:	1000 psi	Radiation	unknown, doubtful
Sensor Temp Limits:	570°F	Reliability	unknown

Development Status: Standard products on the market for special applications.

Potential for Development: Needs attention to compatibility of immersion-type probe with process fluids, to long term reliability, and to radiation resistance. Present device might be used as a diverse sensor in some applications, for which small size is a definite advantage.

Fig. B.1. Innovative Pressure Gauge, Item PS-1.

CEC/IMO WET/WET SILICON PIEZO-RESISTIVE DIFFERENTIAL PRESSURE SENSOR

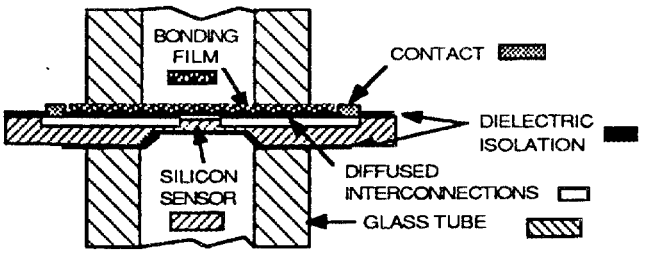

Description:

The CEC/IMO pressure sensing element uses diffused piezo-resistive strain gauges on a single crystal silicon diaphragm to measure pressure. It differs from other similar designs in that the silicon sensing surfaces, that are coated with a dielectric isolation material, allow water to come in contact with them without affecting the electrical resistance. This eliminates need to fill with oil or other isolating fluids. A bonding film seals the silicon wafer between two glass tubes. The entire structure is mounted inside a titanium container that is used to attach the sensor to the process and to the signal conditioning electronics.

Best Features: The wet/wet design that does not require intermediate fluids, providing fast response and high sensitivity.

Worst Limitations: Possible lack of ruggedness and a lack of commercial experience. Lack of information on the compatibility of the film material that is in contact with the process fluid and various aqueous media found in power plants.

Key Specifications

Accuracy:	0.25%	Overpressure:	800 psi max
Stability:	not given	EMI/RFI:	not given
Sensor Response Time:	not given	Vibration:	not given
Pressure Limits:	500 psi	Radiation	not given
Sensor Temp. Limits:	250°F Compensated	Reliability	not given

Development Status: Conceptual design based on advanced and unusual silicon wafer passivation and bonding technology. Only limited information on application of the gauge to and the performance of the gauge in typical industrial applications.

Potential for Development: Sensor design could be used as is for direct contact with some process fluids at fairy low temperatures (up to about 250°F), but would need to be adapted with isolation techniques (capillaries, limp bellows, etc) for use in measurements of water or steam pressures in power plants. As a direct contact non-isolated gauge, it should have exceptional response time and possibly high sensitivity, but limited pressure and temperature range.

Fig. B.2. Innovative Pressure Gauge, Item PS-2.

NOVASENSOR'S FUSION-BONDED SINGLE-CRYSTAL SILICON PRESSURE SENSOR

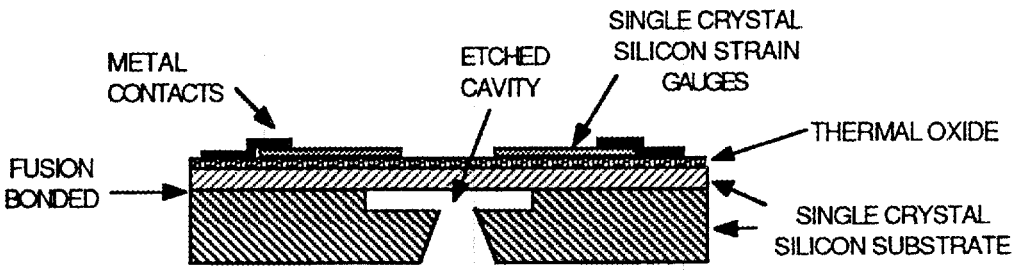

GAGE PRESSURE CONFIGURATION

Description:

A fusion-bonded piezo-resistive single crystal silicon pressure sensor that provides operation to 250°C (480°F) with <0.2% of FS nonlinearity, high overpressure tolerance (500x), stability, and temperature compensation (<0.4% FS). During over pressure, the single crystal silicon diaphragm is stopped by the bottom of the etched cavity below it.

Best Features: High stability and ruggedness. Excellent use of silicon fabrication technology

Worst Limitations: Isolation is required to prevent shorting of contacts by some process fluids. Possible temperature and radiation limits for some applications

Key Specifications

Accuracy:	<0.1% FS	Overpressure:	500 X FS
Stability:	<0.1% short term	EMI/RFI:	not known
Sensor Response Time:	short	Vibration:	probably good
Pressure Limits:	>> 300 psi	Radiation	? <1 MRad
Sensor Temp. Limits:	480°F	Reliability	not known

Development Status: Preliminary; developed with support of Schlumberger Industries.

Potential for Development: Provides fundamental architecture and fabrication for sensors with extensive uses in many applications. Needs product development and smart signal processing. Also needs attention to compatibility and pressure interface design.

Fig. B.3. Innovative Pressure Gauge, Item PS-3.

GULTON SERVONIC SILICON-FILM STRAIN GAUGE PRESSURE SENSOR

Model 3588-42

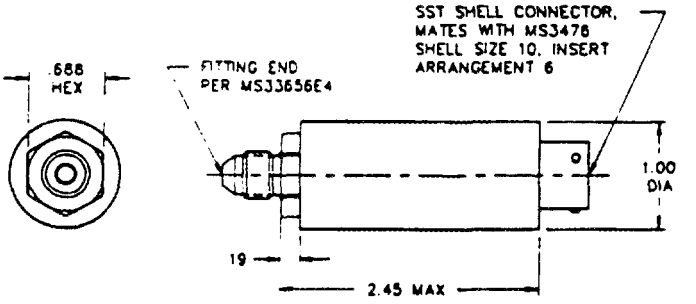

(No internal details provided)

Description

The sensor is formed by sputtering a thin film strain gauge onto a monocrystalline diaphragm of silicon or sapphire, depending on the pressure range. The sputter deposited gauges eliminate the need for bonding, linkages, and all moving mechanisms. The mono-crystalline diaphragm structure assures perfect elasticity, eliminates hysteresis, enhances linearity, and assures repeatability. The inherently high natural frequency of the element provides vibration insensitivity and high speed response.

Best Features: Extremely high mean-time-to-failure and instant response are claimed. Status as a product qualified for military, aerospace, and commercial aircraft applications.

Worst Limitations: Would need to be isolated from some process fluids, apparently.

Key Specifications:

Accuracy:	0.25% + 0.005% per °F	Overpressure:	7500 psia(burst)
Stability:	not given	EMI/RFI:	not given
Sensor Response Time:	not given	Vibration:	50 g (negligible); 100 g for 11 ms
Pressure Limits:	15 to 5000 psi; 150% FS overrange	Radiation:	limited by solid state electronics in package.
Sensor Temp. Limits:	-65 to +250°F	Reliability:	"Extremely high MTBF"

Development Status: Fully developed product

Potential for Development: Some special adaptation to particular power plant applications would be required. Some enhancement of specific characteristics would be possible.

Fig. B.4. Innovative Pressure Gauge, Item PS-4.

KAMAN SCIENCE'S VARIABLE RELUCTANCE PRESSURE SENSOR

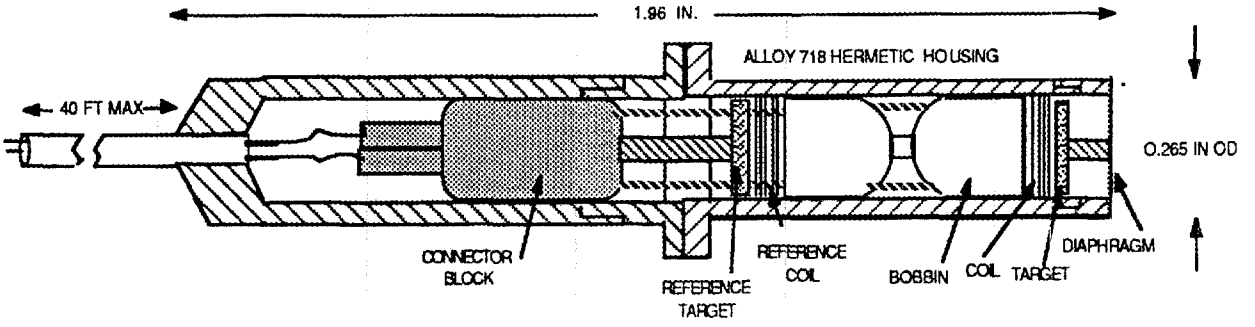

Description: Models KP 1911 (Not Shown) and KP 2025 (Shown Above)
The variable reluctance pressure sensor is a metal-jacketed, hermetically sealed unit with integral metal-sheathed cable, which can be directly exposed to aggressive media—steam, sodium, etc. Pressure on face of cylindrical element alters the internal spacing of coils and targets to change the *electrical impedance of the sensor, which is proportional to pressure.* Absolute(shown above), gage, or differential designs are provided. Signal conditioning electronics are provided. No information on internal atmosphere within sensor. Sensor diameters are 0.635 in. (KP 1911) and 0.265 in. (KP 2025).

Best Features: Probably unexcelled for very high temperature and pressure applications. Pressure ranges include 0–5 and 0–5000 psi. Frequency ranges of 1–46 kHz. Hermetic, integral-cable construction. Gauge can stand 650°C short time exposure. Small footprint.

Worst Limitations: Expensive >>$1000/unit. Unit may unbalance in transient due to temperature differences within the jacket.

Key Specifications

Accuracy:	0.1–0.5%	Overpressure:	to 5500 psi
Stability:	not given	EMI/RFI:	not given
Sensor Response Time:	< 1 msec	Vibration:	not given
Pressure Limits:	to 5000 psi	Radiation:	probably good
Sensor Temp. Limits:	to 540°C (1000°F)	Reliability:	probably very good

Development Status: Product on market.

Potential for Development: Effect of temperature transients on pressure indication need to be determined. Pressure transient settling times, vibration, and EMI/RFI effects need to be determined. Diagnostic methods and condition monitoring should be possible and should be explored. This gauge could be a satisfactory substitute for oil-filled gauges now in use for gage pressures; possibly not for differential pressures.

Fig. B.5. Innovative Pressure Gauge, Item PS-5.

QUARTZDYNE'S SHEAR-MODE, QUARTZ RESONATOR PRESSURE SENSOR

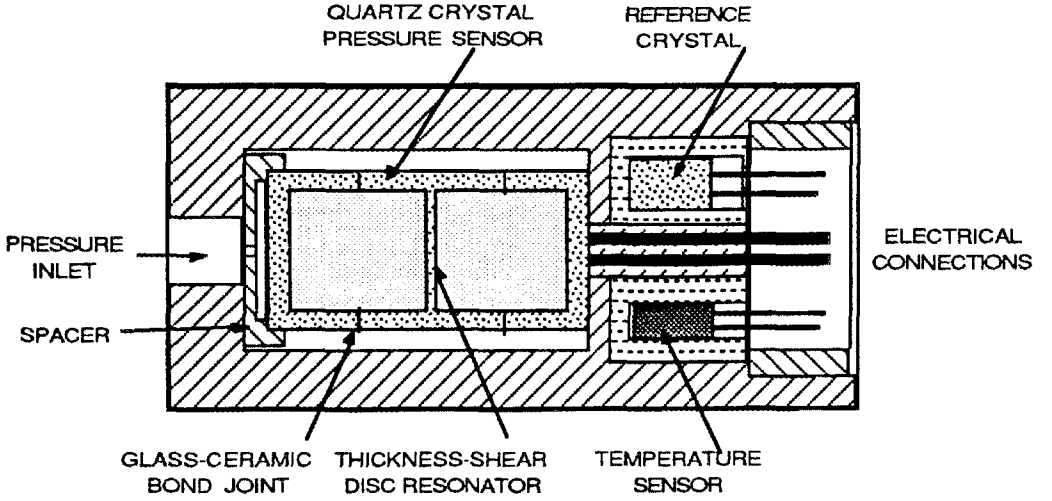

Description:
A hollow, machined single-crystal quartz resonator body changes the frequency of resonance with application of external pressure. The sensor can operate up to 40,000 psi and temperatures as high as 177°C (350°F). It is extremely durable and shock resistant for use down bore holes in well drilling operations. The properties of quartz provide stability, lack of hysteresis, linearity, and some temperature effect minimization. Active temperature compensation is also provided. The basic sensor design would expose the quartz body to process fluids, which might react with quartz, so the manufacturer has provided Inconel bellows process isolation for temperatures up to 177°C without decreasing sensor accuracy. A smart transmitter is being developed.

Best Features: Exceptional accuracy and ruggedness. Can provide separate temperature signal. Uses resonant frequency rather than signal amplitude; frequency coding provides high resolution of temperatures and reduces transmission line loss effects.

Worst Limitations: Requires additional bellows for isolation from process fluid (can be supplied). Oscillator electronics must be installed in or near the sensor. Sensor measures absolute pressures, requiring two gauges to measure differential pressures.

Key Specifications:

Accuracy:	<±0.02%	Overpressure:	>5X
Stability:	<0.03%	EMI/RFI:	not given
Sensor Response Time:	<0.1s	Vibration:	100g
Pressure Limits:	300–5000 psi	Radiation:	> 1 MRad
Sensor Temp. Limits:	350°F	Reliability:	>1 yr Maintenance Interval

Development Status: Products on market for well-drilling applications. Developing smart signal processor. Alternative designs for lower pressures being studied.

Potential for Development: Study is needed of effects of radiation on quartz sensor. If sensor size could be reduced, it would have somewhat more applicability. Process isolation techniques for high temperature sensing are needed.

Fig. B.6. Innovative Pressure Gauge, Item PS-6.

YOKAGAWA'S MECHANICAL RESONATOR TUNING-FORK PRESSURE GAUGE

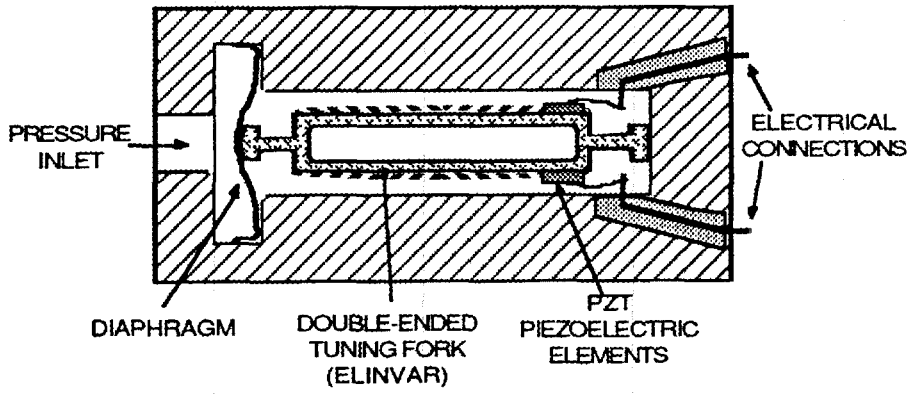

Description:
The resonant frequency of a double-ended Elinvar tuning fork changes with force applied to the ends of the tuning fork. This force is produced by pressure on a diaphragm linked to the tuning fork support. The natural oscillations of the fork are detected by one piezoelectric element, amplified and fedback by a second element to sustain oscillations. This natural frequency is used to measure the pressure. The length of the Elinvar structure is only slightly dependent on temperature. A similar device has been made using a quartz force transducer.(A pressure sensor that works on the same general principle, but uses a cylindrical resonator and has a 15 psi range, is described by Nakaasa Instrument.)

Best Features: Device provides very high stability, resolution, and minimal temperature effects. Nearly immune to EMI. The absolute style is easily adapted to differential or gauge by adding taps in the base. However, filling the resonant fork chamber with fluid may affect accuracy. The sensor is isolated from the process by the diaphragm, and could be filled with process liquid up to that point without affecting the fork's response. Temperature compensation is very good.

Worst Limitation: Relatively small pressure range described in article, but not an inherent deficiency. Vibration might be a problem.

Key Specifications:

Accuracy:	~0.05% FS	Overpressure:	+10%
Stability:	~0.001%	EMI/RFI:	probably slight
Sensor Response Time:	~ est. 0.01 s	Vibration:	not given
Pressure Limits:	30 psi	Radiation:	not given
Sensor Temp. Limits:	~104°F	Reliability:	not given

Development Status: Reported in literature in 1985. Seven commercial models (absolute and gage pressure) and signal processor listed in catalog.

Potential for Development: The simplicity of these devices is attractive and the frequency-coded output signal reduces transmission loss errors. Overpressure protection could be provided by means used in other types of gauges. EMI/RFI have no effect on the mechanical resonance, but might interfere with electrical signals from the piezoelectric crystals. Attention needs to be paid to effects of mechanical vibration and on changes in mechanical properties with irradiation (excluding gamma).

Fig. B.7. Innovative Pressure Gauge, Item PS-7.

KOLLSMAN'S QUARTZ SAW RESONANT PRESSURE SENSOR

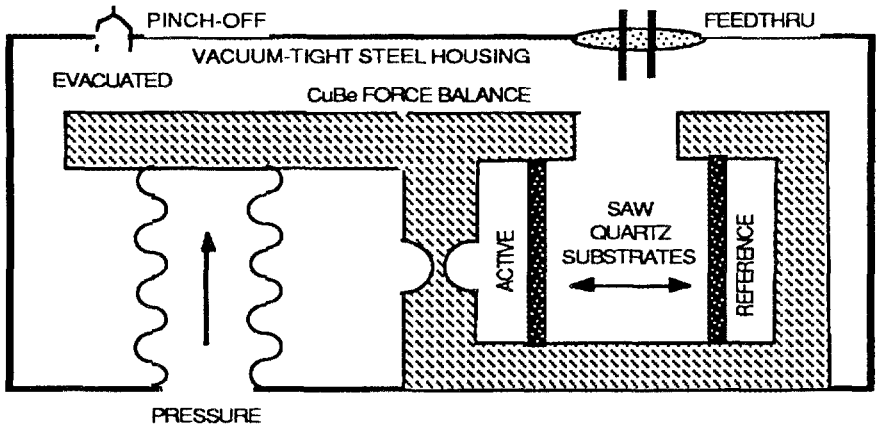

Description:
This sensor uses standing acoustic waves (SAW) to monitor the resonant frequency of a quartz substrate, whose resonant frequency changes with applied force. The extremely high sensitivity achieved (5 kHz/psi) and compensating design reduces the temperature sensitivity to about 0.4%/°C. The design reported in the literature (not as a product) lacks practical elegance, but the SAW concept has major advantages (accuracy, resolution, freedom from vibration effects) and could be designed for industrial use.

Best Features: Very high pressure sensitivity; low temperature sensitivity, low vibration sensitivity. Uses quartz material with usual excellent properties and high stability.

Worst Limitations: Limited pressure range (in this configuration). Lack of product design. *Possibly a limited sensor temperature.*

Key Specifications:

Accuracy:	<0.1%	Overpressure:	>1 atm
Stability:	not given; probably very good	EMI/RFI:	not given; probably very good
Response Time:	short		
Pressure Limits:	16 psi	Vibration:	claimed to be very good
Temperature Limits:	>60°		
Radiation :	not given	Reliability:	not given

Development Status: Experimental results reported in 1984 literature; no known product. Present design is not suited for industrial applications.

Potential for Development: Concept could be applied to a commercial design for very high resolution, temperature compensated sensor with a time-coded (frequency) output signal. Also adaptable to an integrated circuit configuration with quartz SAW substrate replaced with silicon.

Fig. B.8. Innovative Pressure Gauges, Item PS-8.

ULTRASONIC PRESSURE (USP) SENSING

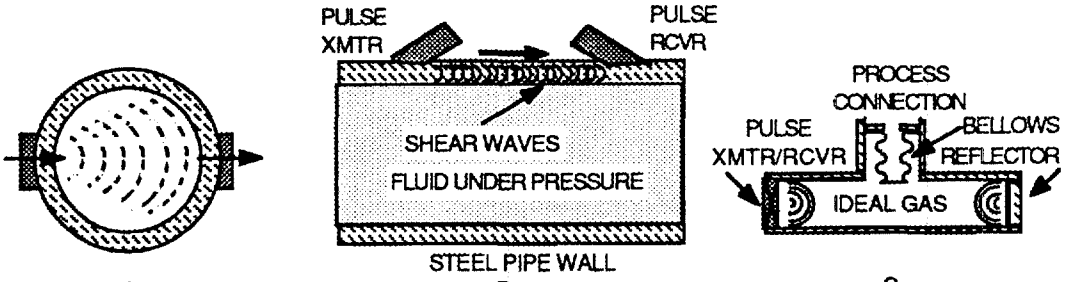

A
CROSS TRANSMISSION

B
PIPE WALL TRANSMISSION

C
IDEAL GAS TRANSMISSION

Description:
The velocity of sound in a liquid or gas depends on the fluid's temperature, density, or pressure. Several methods have been published for measuring pressures non-invasively by propagating acoustic pulses through the medium (A) or in the pipe wall (B) or in an ideal-gas filled appendage (C). The delay between transmission and receipt of a pulse measures velocity, and the attenuation of the received pulse provides additional information, used in method C to separate the temperature and pressure measurement of an ideal gas. Method B propagates shear (Lamb) waves in the pipe wall whose transmission characteristics are well known and whose pulse amplitude is affected by the strain produced by the pressure of the fluid inside the pipe. Method A requires additional information to separate temperature, pressure, and composition information.

Best Features: USP technology can provide non-invasive, retrofit, or diverse pressure measurement in industrial environments, now widely used for level, flow, and temperature. Both pressure and temperature information can be provided.

Worst Limitations: May require knowledge of the process material or fluid properties. May be affected by fluid flow, temperature, or stratification, or process vibration. Requires high accuracy, sophisticated electronics.

Key Specifications: Concept dependent, but estimated typical values

Accuracy:	±0.2%	Overpressure:	not a factor
Stability:	probably good	EMI/RFI:	only slight affect
Sensor Response Time:	10 ms	Vibration:	could be significant
Pressure Limits:	>1000 psi	Radiation:	probably very good
Sensor Temp. Limits:	>800°F	Reliability:	not known

Development Status: USP is being developed or proposed by Panametrics, Rockwell, NASA-JPL, and several others, using combinations or variations of the pictured methods. Emergent technology with some industrial base in related measurements.

Potential for Development: Tends to be application specific. Product line could be developed that met several generic uses, either by using isolators to allow the USP to define its materials, or developing non-invasive strap-on technology and to supply the necessary supporting information for a variety of applications. Particularly attractive for high temperature or corrosive media applications. Suitable for retrofit or add-on instrumentation.

Fig. B.9. Innovative Pressure Gauges, Item PS-9.

Appendix C:

PATENT SEARCH

APPENDIX C

PATENT SEARCH

The Derwent World Patents Index was searched for patents pertinent to this study. Entries were sought for the time period 1981 to 1992 whose titles included PRESSURE (SENSING OR SENSORS? OR DETECT? OR MEASURE? OR TRANSDUCER?) with no additional words between cited words, and only patents in the English language. This reduced the possible list from 105,427 (PRESSURE) to 423 entries that did not refer to medical, projectile or supersonic applications. Titles of these 423 entries were reviewed and 42 were selected for further consideration. Those are listed below by the World Patent Index (WPI) Acquisition Number, **title**, assignee, and summary comments. Listed in inverse chronological order; most recent first.

1. WPI 91-297686/42, "**Pressure sensor using magnetostriction effect** - has film of amorphous magnetic alloy secured to deforming and non-deforming parts with detector elements," Matsushita Elec Ind KK; Detects the change in permeability of an amorphous magnetic alloy film to detect deflection; claimed to improve corrosion resistance and durability.

2. WPI 91-281591/38 "**Optical waveguide pressure sensor for remote sensing** - uses single mode optical waveguide where light is supplied to fibre via polarizer and received after reflection through the same polarizer." Univ. of London; Combines interference between two beams of polarized light in a single mode optical fiber to measure applied to part (but not all) of the periphery of the optical waveguide. Intrinsic. Claims low loss transmission, compact, tough, passive.

3. WPI 91-207581/28, "**Fibre optic temperature pressure sensor** - using variable ratio fibre optic coupler sensor varying coupling ratio in accordance with stress applied to coupler," Sperry Marine Inc; depends on the properties of an encapsulant material whose index of refraction changes with stress applied. The encapsulant surrounds a number of fibers. claims to avoid spark hazards in marine applications.

4. WPI 91-195133/27, "**Determining fuel gas pressure** - using non-membrane based overpressure proof, absolute sensor based on open micro-bridge sensor structure." Honeywell Inc; A thermal response sensor based on an electrically heated film and a resistive sensor film using a heating pulse and observing the transient response. Derives pressure from thermal conductivity and specific heat measurements.

5. WPI-91-075787/11, "**Indirectly excited silicon resonant pressure sensor** - has positive feedback loop maintaining frequency of optical excitation signal equal to the detected beam vibration frequency," Schlumberger Ind; uses optical excitation to produce a resonant response in a beam attached to a pressure sensing diaphragm, beam is transparent. Another optical signal detects the resonant frequency." claimed to be more stable.

6. WPI 90-377576/51. "**Electrostatic pressure sensor with downwardly extending pressure duct** - has latter closed with electrode-bearing diaphragm beneath fixed electrode, with circuit board mounted there above." OMRON Corp (Japan); an electrostatic pressure sensor with integral circuit board. Claimed to be more compact.

7. WPI 90-295885/39. "**Pressure sensor with reduced ambient medium damping effect** - has pressure-sensitive flat capsule vibrating in mechanical resonance with resonance frequency dependent on pressure to be measured." G. Stemme inventor; A capsule with two pressure sensitive membranes formed by crystalline silicon plates, separated by a silicon oxide layer, driven by some mechanism, for which the frequency response of the capsule is detected.

8. WPI 90-269579/36, "**Capacitance semiconductor pressure sensor** - has hinged diaphragm providing linear frequency response." United Technologies Corp. Silicon-on-silicon fabrication technology used to produce a shaped diaphragm to provide more linear capacitance-detected output.

9. WPI 90-179096/24, "**Reliable high pressure sensor usable in hydrocarbon wells** - has two portions of monocrystalline sapphire joined along plane perpendicular to crystal axis, with strain gauge." Schlumberger Techn.; A strain-measuring device with a thin film of electrical resistance material deposited on the outside

surface of the cell. Entire outside surface subjected to pressure but cell is mechanically isolated. Claimed to be more reliable, stable, and accurate and avoids mechanical connection problems.

10. WPI 90-172713/23, "**Highly linear magnetostrictive pressure sensor** - has pressure introducing opening, pressure deforming part, non-deforming part, and permeability detector elements," Matsushita Elec Ind. KK; measures permeability changes in an amorphous magnetic alloy in a differential configuration.

11. WPI 90-164107/21, "**Hall effect pressure transducer** - uses patterned diaphragm and magnetic arrangement to reduce non-linearities," Anent Systems Inc; A shaped pressure deflection diaphragm, O-ring sealed, supports magnets which produce a magnetic field gradient sensed by a Hall effect sensor to detect the diaphragm deflection.

12. WPI 90-123068/16, "**Solid state differential pressure sensor** -has over-pressure stop and free edge construction provided by grooves which define webs." Rosemount Inc.; uses a specially formed brittle diaphragm material and a gauge structure with an internal stop to limit diaphragm travel in overpressure.

13. WPI-90-031356/05, "**Semiconductor pressure transducer for IC engine**"- has pressure detector including Si single crystal oriented parallel to diaphragm. " Toyota Chuo Kenkyus; utilizes the crystallographic orientation of silicon single crystals to produce a voltage proportional to compression force acting on a diaphragm. Claims high reliability and low cost.

14. WPI 90-022242/03, "**Differential capacitive pressure sensor with over-pressure protection** - uses diaphragms with silicon-on-silicon design, and measures capacitance variation with differential pressure," United Technologies Corp.; Two capacitive sensors are bonded together to form a reference cavity chamber. The capacitance of each diaphragm is measured to obtain differential pressures. Overpressure is limited by an internal post between the two plates. Claims to resist damage during over-pressure.

15. WPI 89-340070/46. "**Capacitive pressure sensor circuit** - employs three series-connected operational amplifiers, pressure sensitive capacitor, and further capacitance." Allied-Signal Inc. Operational amplifier circuit to measure change in capacitance that simulates a resonant capacitor-inductor circuit. Provides linear response, minimal frequency jitter, and avoids use of inductor.

16. WPI 89-332400/45. "**Dual capacitive pressure sensor** - has identical value variable capacitors moving in unison in response to external fluid pressure level," Allied-Signal Inc. ; An electrode configuration to provide two diaphragms , one of which is responsive to external pressure, both subject to the same vibration and acceleration forces. Claimed to be immune from vibration and acceleration, and to avoid calibration drift with aging.

17. WPI 89-174572/24 "**Low noise pressure transducer with ceramic diaphragm** - has circuitry connected to resistor for measuring changes due to strain fluctuations," Babcock & Wilcox Co; A thick film resistor on one face of a ceramic diaphragm measures pressure and a resistor that measures changes due to strains or forces applied. Claimed to be compact and highly accurate.

18. WPI 88-3545036. "**Pressure sensor floating diaphragm isolated from external forces** - has diaphragm edge attached to support to form cavity, and having tube through it communicating with cavity." Foxboro Co.; a configuration that includes a gasket that allows replacement of the diaphragm in the event of damage, and to be manufactured from common materials.

19. WPI 88-277943/39 "**Pressure or strain sensitive optical fiber** - has two concentric cores which are optically coupled when pressure is applied to waveguide which is used as a pressure sensor, " Spectran Corp.; Fiber is a three-region device: consists of an inner core, a cladding with a lower index of refraction than the core, and a third outer transmissive layer with an index of refraction greater than that of the intermediate cladding layer. When the fiber is pressurized or stressed, light escapes into the outer layer proportional to the amount of stress. Claims minimum optical dispersion.

20. WPI 88-161732/23, "**Optical micro-pressure transducer, e.g., for microphone** - has beam splitter integrally attached to thin diaphragm, serving as local optical reference plane for entire assembly." Mass. Inst. Tech.: An optical surface connected to the pressure sensing diaphragm splits a coherent source light beam so that one potion of the beam is reflected and acts as a local reference plane. The second part of the beam interferes with the first part and the interference indicates the amount of diaphragm deflection. Claims increased sensitivity and eliminates need for recalibration.

21. WPI 88-161698/23 "**Pressure transducer with integral digital temperature compensation** - has numerical correction data from PROM converted by D-A converter to analog correction signal." Bourns Instr. Inc. Pressure sensor includes temperature sensitive elements and an analog conditioning circuit, PROM, A/D, etc. to correct for temperature effects in a silicon piezoresistive strain gauge.

22. WPI 88-127864/19 "**Pressure sensor for gas or oil well logging** - has ball lens providing optical coupling between fibre and laser powered resonator," STC PLC; consists of a flexible diaphragm and a strain-responsive resonator. Diaphragm and resonator are formed from a silicon single crystal. Evacuated cavity to provide absolute pressure. Fiber function not explained. Cavity resonates at a frequency corresponding to applied pressure. Claims no electrical connection for use in hazardous environment.

23. WPI 88-121199/18 "**Displacement detector e.g. for temperature or pressure transducer** - has path adjuster comprising mechanism moving focusing element and/or reflector in response to movement of object." Univ of Liverpool; uses two-color light source with a filter and means to change path length in response to displacement. Claims use in measurement of position, velocity, acceleration etc., and improved analysis by using the whole color spectrum.

24. WPI 88-001454/01 "**High pressure sensor for vehicle engine combustion chamber** - has silicon chip operating in bending mode having piezo resistors operating in tensile and compression mode." STC PLC: Uses diaphragm to seal silicon chip from corrosive gases and high temperatures and pressures.

25. WPI 87-336386/48 "**Composite piezoelectric material for pressure transducers** - comprises piezoelectric particles dispersed in a polymer matrix," Martin Marietta and Gould Inc. ; Claimed to have improved hydrostatic voltage constant and sensitivity , and time stability for use in hydrophones, microphones, and keyboards.

26. WPI 87-304832/43 "**Pressure sensor with LED and photodetector** - has optical fibres wound around neck of elastic tube." COENECOOP BV, Uses an LED and photodetector to measure transmission of light in a fiber wound around an expanding tube. Claims relative insensitivity to temperature effects.

27. WPI 87-301281/43 "**Temperature compensated remote pressure sensor e.g. for well-logging** - optical power pulses excite transducers into vibration at resonant frequency which is function of pressure or temperature ," STC PLC; system includes two similar vibrational transducers one of which is only sensitive to temperature, and a pulsed light source to maintain the transducers at their respective resonant frequencies. Pressure is determined by measuring the resonant frequency, compensated for temperature. Claimed to be useful for hostile environments such as nuclear reactor monitoring or chemical processes.

28. WPI 87-235114/33. "**Piezoelectric crystal gas pressure transducer** - has phase shifter enabling crystal to oscillate securely in vicinity of electrically resonant frequency for minimum impedance effect." Nangano Keiki Seisak Includes a voltage stabilizer, a current-to-voltage phase shifter and means to minimize crystal impedance. Amplitude of AC voltage is related directly to gas pressure. Claims resistance to noise and temperature effects and good stability.

29. WPI 87-150688/21 "**Corrosion proof differential pressure transducer** - has central disc and two thin diaphragms intercoupled to move together." Kavlico Corp. A differential capacitance sensing gauge with a silicone oil filled space, or a differential configuration, housing and gaskets. Claimed to not be affected by corrosive fluids .

30. WPI 87-031040/05 "**Pressure transducer with three quartz diaphragms** - has electrically conductive layer on each surface of each diaphragm to

reduce sensitivity to temperature changes. " Garrett Corp. Compensated for temperature, vibration, and acceleration by use of reference diaphragm not subjected to pressure. Claimed for use in aircraft and a design that prevents bimetal distortion with change of temperature.

31. WPI 86-233602/36 "**Low thermal response time externally loaded pressure sensor** - uses difference frequency of two SAW devices formed in wall of interior cavity as temperature compensated measure of hydrostatic pressure.": Schlumberger Ltd Frequency of a standing acoustic wave (SAW) device formed on the inner surface of a hollow body varies with pressure. Wall thickness is varied to obtain desired response. Claims 50% increase in sensitivity and 1/3 reduction in response time.

32. WPI 85-305403/49 "**Photoelectric pressure transducer without elastic diaphragm** - has optic fibres conducting light into and out of chamber containing gas-liquid interface." Univ of Leicester ; Optically sensed changes of gas volume and gas-liquid interface caused by pressure changes. Only deformable element of gauge is the compressible gas or liquid. Claimed to have provisions for in-situ calibration and for flushing instrument when required, providing increased robustness and simplicity.

33. WPI 85-291047/47 "**Static load and pressure sensor** -has thin membrane driven into resonant oscillation at frequency dependent on applied load or pressure," Van Berkels Patents Oscillation frequency of a membrane measures applied load. Uses an electrical feedback loop with piezoelectric driver and receiver to drive thin membrane into resonant oscillation.

34. WPI 85-263227/42 "**Pressure compensated differential pressure sensor** - transmits differential and reference signals to digital computer to produce improved output signal" Rosemount Inc; Reference and differential pressure signals are processed in a correlator (digital computer) to provide an improved linear output signal. Claimed for use in aerospace applications.

35. WPI 85-251061/41 "**Pressure transducer diaphragm displacement measurement system** - uses photodetectors and fringe counting circuit to determine deflection from interference of light received via fibers." Babcock and Wilcox Co. A

fringe counting system to measure amount of a fused silica diaphragm deflection. Claimed to be sensitive to small diaphragm deflection and can be used in a high temperature environment.

36. WPI 85-251000/41 "**Solid State pressure transducer** - includes field effect transistor (FET) with elastomer layer between device electrode layers." EMI Ltd. An elastomeric dielectric layer between two electrode layers change electrode spacing due to an applied pressure which causes a change in capacitance. Claimed for article handling machinery.

37. WPI 85-082805/14 "**Signal conditioning circuit for capacitive pressure transducer** - eliminates effect of parasitic capacitance in transducer output." United Technologies Corp; Two 3-plate silicon-glass-silicon capacitive pressure transducers, one of which is a reference, are sampled periodically by a microprocessor system to eliminate effects of parasitic capacitance and enhanced signal-to-noise ratio.

38. WPI 84-282051 "**Vibrating quartz diaphragm pressure sensor** - includes two diaphragms, one varying frequency of thickness shear mode oscillations and the other providing a reference frequency," Sperry Corp. A primary quartz crystal with a diaphragm formed in it and electrodes on each side of the diaphragm. A piezoelectrically excited shear mode oscillator whose frequency responds to the fluid pressure applied to surface of diaphragm. A second identical diaphragm provides a reference frequency to compensate for ambient conditions (temperature, etc). Claimed for high precision air borne measurements.

39. WPI 83-706847/28 "**Digital pressure transducer** -using force-sensitive resonator mounted to non-symmetrical structure producing loads under applied pressure." Paro Scientific Inc; A load-sensitive resonator like a C-shaped Bourdon tube, with a flattened tube generates forces tending to uncurl or straighten the pressure vessel. A change in frequency of oscillation responds to pressure change in a resonator attached to the tube. Claimed to be accurate, low cost , and unaffected by environmental factors.

40. WPI 83-F1602K/16 "**Bridge connected variable reluctance pressure transducer circuit** - has sensing transducer remotely mounted in hazardous location as

within a nuclear reactor." Combustion Eng. Inc ; Provides magnetic sensing of pressure taps with isolation and measurements of reluctance through a magnetically permeable membrane.

41. WPI 83-C1989K/07 "**Inductive differential pressure transducer** - uses pressure-sensing diaphragm having a rigid center formed of or supporting material of high magnetic permeability." Kent-Tieghi Spa. Device measures displacement of a diaphragm by changes in the magnetic reluctance produced, similar to an inherent LVDT method. Provides a dc mA output signal. Design avoids deformation of measuring diaphragm when an over-pressure occurs.

42. WPI 82-N0470E/40 "**Quartz-plate capacitive pressure transducer** - uses common plate to form four capacitors with plates provided on two deflectable discs," Bendix Corp. Four capacitors provide sensing, reference, and feedback capacitors to compensate and minimize susceptibility to noise.

INTERNAL DISTRIBUTION

1-10. R. L. Shepard
11-16. L. H. Thacker
17. M. E. Buchanan
18. J. E. Hardy
19. R. A. Kisner
20. R. C. Kryter
21. F. R. Ruppel
22. M. L. Simpson
23. J. D. White
24. H. R. Brashear
25. B. G. Eads
26. D. N. Fry
27. D. W. McDonald
28. D. R. Miller
29. G. N. Miller
30. R. E. Uhrig
31. J. O. Stiegler
32. K. G. Young
33. D. F. Craig
34-35. Central Research Library
36. Y-12 Technical Reference Section
37-38. Laboratory Records
39. Laboratory Records-RC
40. ORNL Patent Section
41. I&C Division Publications Office

EXTERNAL DISTRIBUTION

42. Office of Assistant Manager in Energy Research and Development, P.O. Box 2001, Oak Ridge, TN 37831-8600
43. J. M. Weiss, EPRI, P.O. Box 10412, 3412 Hillview Avenue, Palo Alto, CA 94303
44. S. R. Martin, Jr., DOE-OR, P.O. Box 2001, Oak Ridge, TN 38731-8600
45. B. Chexal, EPRI, 3412 Hillview Avenue, Palo Alto, CA 94303
46. V. Radeka, Brookhaven National Laboratory, Instrumentation Division, 535-B, Upton, NY 11973
47. M. M. Sevik, Carderock Division, Naval Surface Warfare Center, Code 1900, Bethesda, MD 20084-5000
48. R. M. Taylor, Leeds and Northup, Sunneytown Pike, North Wales, PA 19454
49-50. Office of Scientific and Technical Information, U.S. Department of Energy, P.O. Box 62, Oak Ridge, TN 37831