MARTIN MARIETTA ENERGY SYSTEMS LIBRARIES
3 4456 0368317 3

ORNL/TM-12010

PRODUCTION CAPABILITIES IN U. S. NUCLEAR REACTORS FOR MEDICAL RADIOISOTOPES

S. Mirzadeh
R. E. Schenter
A. P. Callahan
F. F. (Russ) Knapp, Jr.

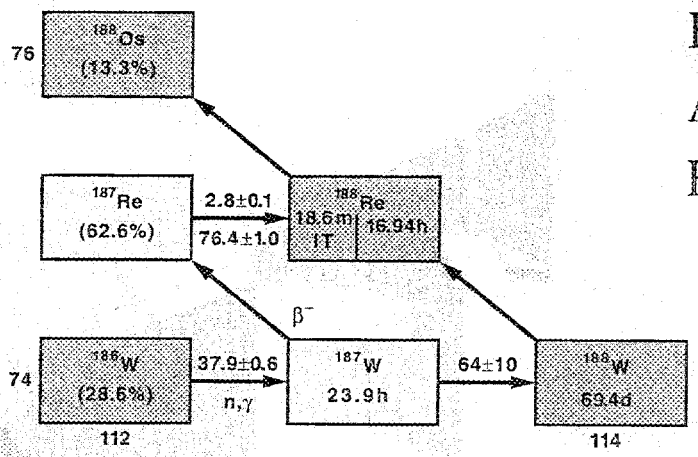

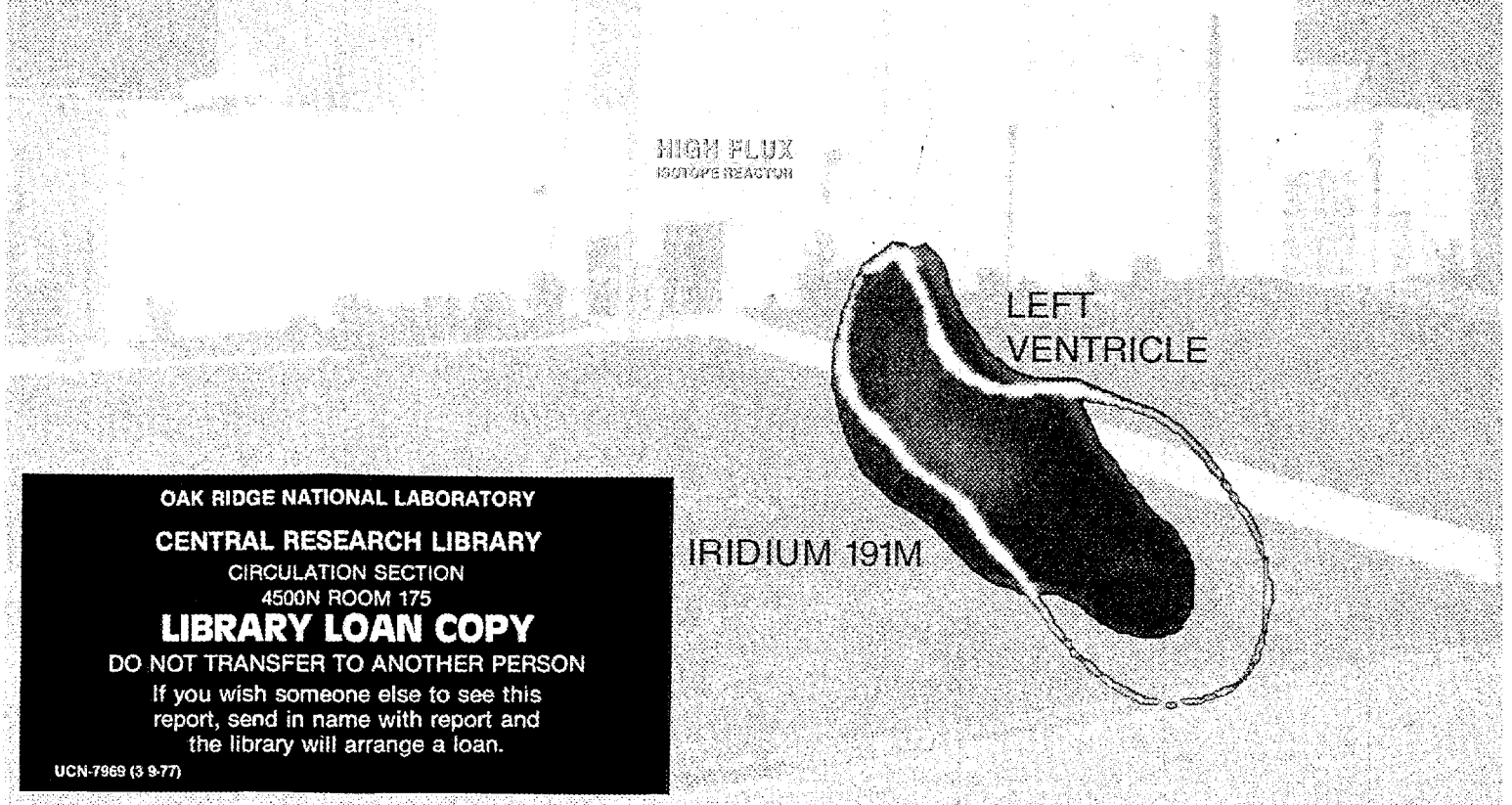

OAK RIDGE NATIONAL LABORATORY
CENTRAL RESEARCH LIBRARY
CIRCULATION SECTION
4500N ROOM 175
LIBRARY LOAN COPY
DO NOT TRANSFER TO ANOTHER PERSON
If you wish someone else to see this report, send in name with report and the library will arrange a loan.
UCN-7969 (3 9-77)

This report has been reproduced directly from the best available copy.

Available to DOE and DOE contractors from the Office of Scientific and Technical Information, P.O. Box 62, Oak Ridge, TN 37831; prices available from (615) 576-8401, FTS 626-8401.

Available to the public from the National Technical Information Service, U.S. Department of Commerce, 5285 Port Royal Rd., Springfield, VA 22161.

This report was prepared as an account of work sponsored by an agency of the United States Government. Neither the United States Government nor any agency thereof, nor any of their employees, makes any warranty, express or implied, or assumes any legal liability or responsibility for the accuracy, completeness, or usefulness of any information, apparatus, product, or process disclosed, or represents that its use would not infringe privately owned rights. Reference herein to any specific commercial product, process, or service by trade name, trademark, manufacturer, or otherwise, does not necessarily constitute or imply its endorsement, recommendation, or favoring by the United States Government or any agency thereof. The views and opinions of authors expressed herein do not necessarily state or reflect those of the United States Government or any agency thereof.

Cover

The ORNL High Flux Reactor has the highest thermal neutron flux and is used to produce tungsten-188 which is the parent for a generator system providing carrier-free rhenium-188 for therapeutic applications. The end-diastolic and end-systolic left ventricular images obtained in a patient were measured with the ultra short-lived iridium-191m radioisotope (half-life 4.96 seconds). The images were kindly provided by P. Franken, M.D., from the Nuclear Medicine Department at the Free University of Brussels. Iridium-191m was obtained from the osmium-191/iridium-191m generator developed at ORNL in conjunction with the Cyclotron Research Center in Liege, Belgium.

MARTIN MARIETTA ENERGY SYSTEMS LIBRARIES

3 4456 0368317 3

ORNL/TM-12010
905 48

Contract No. DE-AC05-84OR21400

Production Capabilities in U. S. Nuclear Reactors For Medical Radioisotopes

S. Mirzadeh[1], R. E. Schenter[2], A. P. Callahan,[1]
and F. F. (Russ) Knapp, Jr.[1]

[1]Nuclear Medicine Group
Health and Safety Research Division
Oak Ridge National Laboratory

and

[2]Applied Systems Programs Group
Engineered Applications Division
Westinghouse Hanford Company

Work sponsored by
DOE Office of Health and
Environmental Research

Date Published - November 1992

OAK RIDGE NATIONAL LABORATORY
Oak Ridge, Tennessee 37831-6285
managed by
MARTIN MARIETTA ENERGY SYSTEMS, INC.
for the
U.S. DEPARTMENT OF ENERGY

To John N. Maddox

Preface

The availability of reactor-produced radioisotopes in the Unites States for use in medical research and nuclear medicine has traditionally depended on facilities which are an integral part of the U.S. national laboratories and a few reactors at universities. One exception is the reactor in Sterling Forest, New York, originally operated as part of the Cintichem (Union Carbide) system, which is currently in the process of permanent shutdown. Since there are no industry-run reactors in the U.S., the national laboratories and universities thus play a critical role in providing reactor-produced radioisotopes for medical research and clinical use. The goal of this survey is to provide a comprehensive summary of these production capabilities.

With the "temporary" shutdown of the Oak Ridge National Laboratory (ORNL) High Flux Isotope Reactor (HFIR) in November 1986, the radioisotopes required for DOE-supported radionuclide generators were made available at the Brookhaven National Laboratory (BNL) High Flux Beam Reactor (HFBR). In March 1988, however, the HFBR was temporarily shut down which forced investigators to look at other reactors for production of the radioisotopes. During this period the Missouri University Research Reactor (MURR) played an important role in providing these services. The HFIR resumed routine operation in July 1990 at 85 MW power, and the HFBR resumed operation in June 1991, at 30 MW power.

At the time of the HFBR shutdown, there was no available comprehensive overview which could provide information on status of the reactors operating in the U.S. and their capabilities for radioisotope production. The obvious need for a useful overview was thus the impetus for preparing this survey, which would provide an up-to-date summary of those reactors available in the U.S. at both the DOE-funded national laboratories and at U.S. universities where service irradiations are currently or expected to be conducted. This document will be helpful not only to staff of DOE-supported nuclear medicine programs, but also other investigators who require reactor service irradiations or require non-commercially-available radioisotopes for their research. In addition, this overview will also prove its usefulness to the students of nuclear science and engineering as a reference document and will provide them with the available opportunities in the nuclear physics, nuclear chemistry and nuclear engineering aspects of "Nuclear Medicine" research.

In Chapter 3, we have compiled information regarding nine U.S. research nuclear reactors; five reactors at the national laboratories and four university reactors. These university reactors are reasonable representations of basic designs used in most university reactors. Some of this information which includes a brief description of each reactor and their capabilities was supplied by the staff of the respective reactors. This information has been directly incorporated into the survey, with the exception of editing for consistency in format and syntax. Among the reactors which are discussed here are the two most powerful research reactors in the world, namely the Advanced Test Reactor (ATR) at the Idaho National Engineering Laboratory and the Fast Flux Test Facility (FFTF) at the Westinghouse Hanford Company. Until recently, these two reactors have been involved in defense related research and breeding reactor programs and were not easily accessible. However, in the past two years there have been serious efforts to allow other research to be conducted in these

reactors, and most recently attempts have been made to convert the FFTF to an "open" research reactor.

In describing the above reactors, some aspects of each reactor have been discussed in more detail than others in order to provide the potential user with a broader view of all the aspects of "production of radioisotopes in a nuclear reactor". For example, the engineering design and the irradiation target facilities of HFIR, Section 3.5, has been discussed in more detail than other reactors. For detailed estimates of irradiation costs and available services, we refer the potential users to section 3.7 describing the MURR. A detailed discussion of the general limitations and safety requirements for irradiation of material in a nuclear reactor are given in Sections 3.4 and 3.8, describing the HFBR and the Oregon State University Triga Reactor (OSTR), respectively. The information compiled in this report, although not covering all the reactors target volume availability or all possible irradiation positions, should help in determining U.S. radioisotope production strategies. It is believed that such information can be used to more efficiently plan and optimize radioisotope production in the limited available fission reactor facilities.

Acknowledgements

The authors would like take this opportunity to acknowledge the contribution of the following individuals who provided the information which has been included in this summary and without their contributions, completion of this survey would have been very difficult if not impossible.

Professor S. E. Binney	Oregon State University Triga Reactor
Professor O. K. Harling, Director	Massachusetts Institute of Technology Reactor
R. W. Hobbs, Ph.D., HFIR Experimental Coordinator	High Flux Isotope Reactor Oak Ridge National Laboratory
R. A. Karam, Ph.D., Director	Georgia Institute of Technology Reactor
P. Miller, Ph.D.	Missouri University Research Reactor
M. M. Minor, Ph.D.	Omega West Reactor -- Los Alamos National Laboratory

The work at Oak Ridge National Laboratory was performed under the auspices of the United States Department of Energy under Contract DE-AC05-84OR21400 with Martin Marietta Energy Systems, Inc. The work at Westinghouse Hanford Company was performed under contract DE-AC06-87RL10930 with the United States Department of Energy.

The authors wish to acknowledge D. E. Erb, C. R. Klee and H. H. Young (retired) of the Office of Energy Research, United States Department of Energy for their views on the first draft of this report and look forward for their views on the future versions of this report. We also thank C. W. Alexander, K. R. Ambrose, R. W. Hobbs, and P. S. Rohwer of ORNL for their critical review and suggestions for completion of the final manuscript. The authors further wish to acknowledge the secretarial assistance of L. S. Ailey.

Finally, this monograph is dedicated to **Mr. John N. Maddox**, staff member of the Medical Applications and Biophysical Division, Office of Health and Environmental Research, Office of Energy Research, United States Department of Energy, for his vision and continuous interest in nuclear medicine research.

Table of Contents

		Page
1.	**Introduction**	**1.1-1.6**
1.1.	The Role of Nuclear Reactors -- A Historic Perspective	1.1
1.2.	Radioisotopes in Medical and Biological Research	1.2
1.3.	Current Requirements and Challenges	1.3-1.4
1.4.	References	1.4
	Table	1.5-1.6
2.	**Reactor-Produced Radioisotopes**	**2.1-2.35**
2.0.	Introduction	2.1-2.2
2.1.	[n,γ], [2n,γ] and [n,n'γ] Reactions 2.1.1. Production of ^{117m}Sn and ^{195m}Pt	2.2-2.4
2.2.	[n,γ]($\beta^- \rightarrow$), [2n,γ]($\beta^- \rightarrow$) Reactions.	2.4
2.3.	[n,p] and [n,α] Reactions 2.3.1. Production of carrier-free ^{47}Sc 2.3.2. Production of carrier-free ^{64}Cu and ^{67}Cu	2.4-2.6
2.4.	Reactor-Produced Parents for Radionuclide Generator Systems 2.4.1. Production of ^{191}Os; ^{191}Os/^{191m}Ir generator 2.4.2. Production of ^{188}W; ^{188}W/^{188}Re generator 2.4.3. Production of ^{194}Os; ^{194}Os/^{194}Ir generator 2.4.4. Production of ^{103}Ru; ^{103}Ru/^{103m}Rh generator	2.6-2.10
2.5.	A Comparison Among Reactors for Radioisotope Production	2.10-2.12
2.6.	Radioisotopic Purity	2.12-2.13
2.7.	Radioisotopes From Both Accelerators and Fission Reactors	2.13-2.14
2.8.	References	2.14-2.18

Table of Contents cont.

			Page
	Tables		2.19-2.30
	Figures		2.31-2.35
3.	**Principal Research Nuclear Reactors in the United States**		
3.0.		Introduction	3.0.1-3.0.7
3.1.	ATR:	Advance Test Reactor, Idaho National Engineering Laboratory.	3.1.1-3.1.11
3.2.	FFTF:	Fast Flux Test Facility, Westinghouse Hanford Company	3.2.1-3.2.12
3.3.	GTRR:	Georgia Institute of Technology Research Reactor	3.3.1-3.3.8
3.4.	HFBR:	High Flux Beam Reactor, Brookhaven National Laboratory	3.4.1-3.4.14
3.5.	HFIR:	High Flux Isotope Reactor, Oak Ridge National Laboratory	3.5.1-3.5.27
3.6.	MITR-II:	Massachusetts Institute of Technology Research Reactor	3.6.1-3.6.11
3.7.	MURR:	Missouri University Research Reactor	3.7.1-3.7.11
3.8.	OSTR:	Oregon State University Triga Reactor	3.8.1-3.8.21
3.9.	OWR:	Omega West Reactor, Los Alamos National Laboratory	3.9.1-3.9.10
4.	**Projection of Availability and Capabilities in 1990's**		**4.1-4.5**
4.1.	An Overview of the ORNL Advanced Neutron Source (ANS)		4.1

List of Tables

		Page
Table 1.1.	A List of Reactor-Produced Radioisotopes of Current Interest to Nuclear Medicine Research and Clinical Applications	1.5-1.6
Table 2.1.1.	Examples of Reactor-Produced Radioisotopes via [n,γ] Reactions	2.19
Table 2.1.2.	Examples of Reactor-Produced Radioisotopes by the [2n,γ] and [n,n'γ] Reactions	2.20
Table 2.1.3.	Reactor Production of ^{117m}Sn	2.21
Table 2.2.1.	Examples of Reactor-Produced Radioisotopes; [n,γ]($\beta^- \rightarrow$), [n,2n]($\beta^- \rightarrow$), [2n,γ]($\beta^- \rightarrow$) and [n,γ]($\beta^- \rightarrow$)[n,γ] Reactions	2.22
Table 2.3.1.	Examples of Reactor-Produced Radioisotopes; [n,p] Reactions	2.23
Table 2.4.1.	Reactor-Produced Parents for Radionuclide Generator Systems	2.24
Table 2.4.2.	Production of Tungsten-188	2.25
Table 2.4.3.	Production of Osmium-194	2.26
Table 2.5.1.	Capture Reaction Rates for Production of Radioisotopes in Several Fast and Thermal Reactors/Irradiation Positions	2.27-2.28
Table 2.5.2.	Achievable Specific Activities of Reactor-produced Medical Radioisotope in Various Reactors/Irradiation Positions	2.29
Table 2.5.3.	Relative Activities of Eu Isotopes Produced as Impurities in the Reactor Produced ^{145}Sm from Enriched ^{144}Sm Targets	2.30
Table 3.0.1.	Operating Power Level and Available Maximum Neutron Fluxes	3.0.4
Table 3.0.2	Group Neutron Fluxes for Various Reactor/Irradiation Positions	3.0.5
Table 3.1.1.	Details of the ATR Reactor Vessel and Internal Statistics	3.1.6.
Table 3.1.2.	Approximate Peak Flux Values for Various ATR Capsule Positions at Maximum Allowable Power (250 MW)	3.1.7
Table 3.2.1.	Typical Core Arrangement of the FFTF	3.2.5

List of Tables cont.

		Page
Table 3.3.1.	Thermal Neutron Flux in the GTRR	3.3.4
Table 3.4.1.	HFBR Statistics	3.4.6
Table 3.4.2.	HFBR Irradiation Facilities and the Corresponding Calculated Neutron Fluxes at 30 MW Power	3.4.7
Table 3.5.1.	Horizontal Midplane Thermal and Fast Neutron Fluxes at 85 MW in the HFIR Flux Trap with Standard Transuranium Target Installed	3.5.13
Table 3.5.2.	Horizontal Midplane Neutron Fluxes at the Vertical Centerline of the Experiment Facilities in the Beryllium Reflector of the HFIR	3.5.14
Table 3.5.3.	Gamma-Heating Rates for the Facilities in the Target Region of the HFIR	3.5.15
Table 3.5.4.	Gamma-Heating Rates for the Experimental Facilities in the Beryllium Reflector of the HFIR	3.1.16
Table 3.6.1.	MITR In-Core Vertical Thimbles	3.6.7
Table 3.6.2.	Horizontal-Radial Beam Ports (6RH1 and 6RH2) including Pneumatic Rabbit Facility (2PH1) at the MITR	3.6.8
Table 3.6.3.	Vertical Thimbles in Graphite Reflector at the MITR (3GV2, 4, 5 and 6)	3.6.9
Table 3.7.1.	Thermal Neutron Fluxes and Sample Dimensions at Various Irradiation Facilities at MURR-II	3.7.7
Table 3.7.2.	MURR, NAP Charge Schedule: 1-Jul-89 to 30-Jun-90	3.7.8
Table 3.7.3.	MURR, NAP Charge Schedule: 1-Jul-89 to 30-Jun-90	3.7.8-3.7.9
Table 3.8.1.	Neutron Fluxes at the OSTR Irradiation Facilities	3.8.13
Table 3.8.2.	Neutron Spectrum in Cadmium-Lined In-Core Tube (CLICT) of OSTR	3.8.14
Table 3.8.3.	Usable Dimensions of the OSTR Irradiation Facilities	3.8.15

List of Tables cont.

		Page
Table 3.8.4.	Methods of encapsulation of target material at the OSTR	3.8.16-3.8.18
Table 3.9.1.	Hydraulic and Pneumatic Rabbit Ports at the OWR	3.9.7
Table 3.9.2.	Core, Beam Ports, and Thermal Column Stringers at the OWR	3.9.8
Table 4.1.	ANS Conceptual Design and Scientific Goals Required by User Communities for an Advanced Neutron Source	4.2-4.4

List of Figures

Figure 2.4.1.	Production scheme of ^{191}Os, showing the production and decay modes of major radionuclides produced in neutron irradiation of highly enriched ^{190}Os (Taken from reference 30)	2.31
Figure 2.4.2.	Production yield of ^{191}Os at EOB as a function of irradiation time for various neutron fluxes; curves represent the theoretical and stars are experimental data (Taken from reference 30).	2.32
Figure 2.5.1.	Production yield of ^{67}Cu at EOB as a function of irradiation time in several Reactors/Irradiation Positions	2.33
Figure 2.5.2.	Production yield of ^{145}Sm ($^{144}Sm[n,\gamma]$) at EOB as a function of irradiation time in several Reactors/Irradiation Positions	2.34
Figure 2.5.3.	Production yield of ^{165}Dy ($^{164}Dy[n,\gamma]$) at EOB as a function of irradiation time in several Reactors/Irradiation Positions	2.35
Figure 3.0.1.	Neutron Spectrum in various Reactors/Irradiation Positions	3.0.6
Figure 3.0.2.	Fast neutron ($1 \geq E_n \geq 16$ MeV) spectrum in various Reactors/Irradiation Positions	3.0.7
Figure 3.1.1.	Horizontal Cross-section of ATR	3.1.8
Figure 3.1.2.	Vertical cross-section of the ATR vessel, showing the control drives and part of the shielding	3.1.9
Figure 3.1.3.	Irradiation positions in the ATR	3.1.10

List of Figures cont.

		Page
Figure 3.1.4.	Typical ATR irradiation capsules	3.1.11
Figure 3.2.1.	Reactor location within the FFTF containment	3.2.8
Figure 3.2.2.	Cutaway view of the FFTF containment building	3.2.9
Figure 3.2.3.	Cutaway view of the FFTF Reactor	3.2.10
Figure 3.2.4.	A typical arrangement of the FFTF core map	3.2.11
Figure 3.2.5.	Materials Open Test Assembly (MTOA) of the FFTF	3.2.12
Figure 3.3.1.	Cutaway perspective view of the GTRR	3.3.6
Figure 3.3.2.	Horizontal cross-section of GTRR at the core midplane	3.3.7
Figure 3.3.3.	GTRR neutron flux at 1 MW power	3.3.8
Figure 3.4.1.	Calculated neutron flux distributions (at 40 MW power) as a function of radial distance from the center of the HFBR core	3.4.11
Figure 3.4.2.	Horizontal cross-section of the HFBR core showing the location of the 28 fuel elements, 9 beam tubes and 6 irradiation facilities	3.4.12
Figure 3.4.3.	Vertical cross-sectional view of the HFBR showing the reactor vessel, and shielding. The operational and experimental area are also indicated	3.4.13
Figure 3.4.4.	Elevation of the HFBR building in the north-south direction.	3.4.14
Figure 3.5.1.	Location of the HFIR core within the reactor pools and Experimental Facilities	3.5.17
Figure 3.5.2.	Vertical cross-section of the HFIR pressure vessel and core	3.5.18
Figure 3.5.3.	Schematic Illustration of the HFIR Core	3.5.19
Figure 3.5.4.	HFIR Fuel Element	3.5.20
Figure 3.5.5.	Cross-section of the HFIR pressure vessel at horizontal midplane showing orientation of beam tubs with respect the core and irradiation facilities	3.5.21

List of Figures cont.

		Page
Figure 3.5.6.	Cross-section of the HFIR core at horizontal midplane showing various irradiation facilities	3.5.22
Figure 3.5.7.	Irradiation positions in the HFIR Flux Trap	3.5.23
Figure 3.5.8.	HFIR neutron flux distribution at core horizontal midplane with reactor operating at 100 MW	3.5.24
Figure 3.5.9.	The absolute and relative thermal and fast neutron fluxes in the Hydraulic Tube array of HFIR (100 MW)	3.5.25
Figure 3.5.10.	Design of HFIR Hydraulic Tube capsule	3.5.26
Figure 3.5.11.	Design of HFIR Irradiation Capsules for the Target and Peripheral Positions	3.5.27
Figure 3.6.1.	View of M.I.T. research reactor, MIRT-II, showing major components and experimental facilities	3.6.10
Figure 3.6.2.	Expanded view of the horizontal cross-section of the MIRT-II	3.6.11
Figure 3.7.1.	View of University of Missouri Research Reactor, MURR	3.7.10
Figure 3.7.2.	Horizontal cross-section of MURR, showing various irradiation facilities	3.7.11
Figure 3.8.1.	Cutaway view of OSTR core arrangement (standard TRIGA Mark II)	3.8.19
Figure 3.8.2.	Horizontal cross-sectional of the OSTR	3.8.20
Figure 3.8.3.	Vertical cross-section of the OSTR	3.8.21
Figure 3.9.1.	Cutaway view of OWR	3.9.9
Figure 3.9.2.	Plan view of the OWR through the vertical center of the core	3.9.10
Figure 4.1.	Figure 4.1. Preliminary Design of the ANS Reactor Assembly	4.5

1.0. INTRODUCTION

1.1. The Role of Nuclear Reactors -- A Historic Perspective

1.2. Radioisotopes in Medical and Biological Research

1.3. Current Requirements and Challenges

1.1. The Role of Nuclear Reactors -- A Historic Perspective

Since the beginning of the "Atomic Age," the importance of the peaceful use of nuclear reactors for the production of radioisotopes for biological research and clinical applications has been clearly realized. The Graphite Reactor at the Oak Ridge National Laboratory (ORNL) was the first full-scale operating reactor prototype and played a key role in the initial production of a variety of radioisotopes with applications in medical and biological research.

Carbon-14 was the first reactor-produced radioisotope for clinical use in nuclear medicine, and was produced at ORNL in 1946 for use at the Barnard Free Skin and Cancer Hospital in St. Louis, Missouri. In fact, nuclear reactors were essentially the foundation on which the discipline of modern nuclear medicine was first built. In the first decade following World War II, a variety of radioisotopes were produced at ORNL and distributed for research through the "ORNL Radioisotope Development Center." This early work, which has been reviewed in a number of publications (1), included production of carbon-14 and phosphorus-32 and radioisotopes of iodine (I-131, I-130, etc.), which rapidly became invaluable tools for application of the "tracer principal" in modern biological research.

A second era in the use of radioisotopes, particularly in nuclear medicine research and clinical nuclear medicine, began in the mid 1960's during an intensive era of research on

radionuclide generator systems (2). The molybdenum-99/technetium-99m ($^{99}Mo/^{99m}Tc$) generator system, primarily available from nuclear reactors from fission-product ^{99}Mo, was first developed at the Brookhaven National Laboratory (BNL) (3) and marked the beginning of a new era in nuclear medicine. Local production facilities and/or the establishment and coordination of rapid transportation systems required to supply the radioisotope from the producer to the user were no longer central factors in providing short-lived radioisotopes for clinical use and research with the availability of radioisotope generator systems. Institutions now had $^{99}Mo/^{99m}Tc$ generators available for routine availability of ^{99m}Tc for on-site radiolabeling a variety of tissue-specific agents. The $^{99}Mo/^{99m}Tc$ technology rapidly moved from the National Laboratory system to industry, and since this early work, ^{99m}Tc has continued to be the "work horse" for clinical nuclear medicine.

Recent studies have estimated that the annual sale of $^{99}Mo/^{99m}Tc$ generators and associated "kits" for the preparation of various tissue-specific agents exceeds $200 million. Although this dollar figure may appear small in contrast to the multi billion $ annual U.S. sale of therapeutic drugs, it is a significant number in terms of the "single dose" use of radiopharmaceuticals used in the specialty of diagnostic nuclear medicine.

1.2. Radioisotopes in Medical and Biological Research

In addition to the $^{99}Mo/^{99m}Tc$ generator system, a variety of other reactor-produced radioisotopes continue to play an important role both in clinical nuclear medicine and in radiopharmaceutical and biological research. A list of radioisotopes currently of interest in nuclear medicine and biology are given in Table 1.1. Productions of these isotopes are discussed in Chapter 2. Key examples of radioisotopes available from generator systems using

reactor-produced parent radioisotopes are presented in Section 2.3 of this report. In section 2.5, a comparison among reactors for production of specific isotopes is given.

1.3. Current Requirements and Challenges

Specific activity[1] is an important parameter since in many cases the availability of very high specific activity or carrier-free radioisotopes is required for biological applications. One example of the importance of high specific-activity is the radiolabeling of tumor-specific antibodies for both diagnostic and therapeutic applications where only very small amounts of the radiolabeled antibodies are administered to insure maximal uptake at the limited tumor cell surface antigen sites. Another example is the use of receptor mediated radiopharmaceuticals that are potentially very important for the clinical evaluation of neurological diseases. Since the population of neurotransmitter sites is very limited, high specific activity agents are required to evaluate site-specific uptake.

Since the specific activity of a radioisotope produced by particle induced reactions is a direct function of the incident particle flux, an increase in the incident particle flux results in an absolute increase in the specific activity of the product. This relationship is linear for simple reactions and non-linear for complex reactions. It is important to note that the half-lives, production and destruction cross sections, and irradiation time are equally important.

Several important radioisotopes have long physical half-lives and low production cross-sections requiring long irradiation periods even in the highest neutron flux available. Examples in this category include two generator parents, tungsten-188 (half-life 69 days; for rhenium-188) and osmium-194 (half-life 6 years; for iridium-194), which are formed by double

[1]Specific activity is defined as the relative abundance of a radioactive isotope to the stable isotopes of the same element in a homogeneously mixed sample. Specific activity is usually expressed in terms of the disintegration rate per unit mass of the element (e.g. mCi/mg).

neutron capture. These radioisotopes appear important for potential cancer therapy and there is widespread interest in their availability for development of new, improved agents.

In addition, the increased flux not only results in higher specific activity products but will result in conservation of the enriched target material. For example, increase of the neutron flux by a factor of two requires only about half of the enriched target material to produce the same amount of radioactive product. Considering the limited availability of the enriched materials, conservation is unavoidable. Sometimes a higher flux increases the potential capacity of the reactor by reaching the equilibrium conditions quicker.

Capability for the production of short-lived radioisotopes in a nuclear reactor is another important criteria to be considered. Access to the reactor irradiation facilities during reactor normal operation (e.g., via hydraulic rabbit tube system) allows short irradiation periods, which are required for the production of many useful short-lived radioisotopes such as ^{47}Sc, ^{64}Cu, ^{67}Cu, $^{1\ 105}Rh$, ^{109}Pd, ^{153}Sm, ^{166}Ho and ^{199}Au. These isotopes all have half-lives of about three days or less. Production of ^{99}Mo can also be enhanced by on-line access to the targets.

1.4. References

1. Bizzell, O. M., *Early History of Radioisotopes from Reactor*, Isotope and Radiation Technology, **4**, 25 (1966).

2. Richards, P., *The Technetium-99m Generator*, in Radioactive Radiopharmaceuticals, PROC. CONF.-651111, ch. 17, pp 323-334, National Bureau of Standards, Springfield, Virginia (1966).

3. Richards, P., *Nuclide Generators*, in Radioactive Radiopharmaceuticals, PROC. CONF.-651111, ch. 10, pp 155-163, National Bureau of Standards, Springfield, Virginia (1966).

4. MIRD: Radionuclide Data and Decay Schemes, (Weber, D. A., Eckerman, K. F., Dillman, L.T. and Ryman, J. C.), The Society of Nuclear Medicine, NY (1989).

Table 1.1. A List of Reactor-Produced Radioisotopes of Current Interest to Nuclear Medicine Research and Clinical Applications

Radio-nuclide	$t_{1/2}$	E_β^{av} [a] (KeV)	$E_\gamma(I_\gamma)$ (keV)(%)	Dose [b] (rad.g/μCi.h)	Comments
^{47}Sc	80.4 h	162.2	159.4(68)	0.578	
^{64}Cu	12.7 h	218.8	511(38.6) 1346(0.48)	0.665	
^{67}Cu	61.9 h	141.5	185(44)	0.575	
^{90}Y	64.0 h	934.8	No γ's	1.99	
^{105}Rh	36.0 h	190.0	319(19)	-	
^{103}Pd	17.0 d	EC[c]	357(0.02)	0.043	
^{109}Pd	13.4 h	360.9	88(4)	0.935	
^{117m}Sn	13.6 d	IT[d]	158.6(86)	0.678	
^{153}Sm	46.7 h	225.0	103(28)	0.699	
^{166}Ho	26.4 h	666.0	80(6)		
^{186}Re	90.6 h	350.0	many low	0.776	
^{188}Re	17.0 h	767.8	155(15)	1.78	$^{188}Re/^{188}W$
^{191m}Ir	4.94 s	IT[d]	129(26)	0.06	$^{191m}Ir/^{191}Os$
^{194}Ir	19.2 h	860.0	329(13)	-	$^{194}Ir/^{194}Os$
^{195m}Pt	4.0 d	IT[d]	99(11) 130(3)	0.552	
^{198}Au	64.8 h	311.4	412(96)	1.56	

Table 1.1. cont.

Radio-nuclide	$t_{1/2}$	E_{β}^{av} [a] (KeV)	$E_{\gamma}(I_{\gamma})$ (keV)(%)	Dose [b] (rad.g/μCi.h)	Comments
^{199}Au	74.4 h	87.0	158(39) 208(22)	0.494	
^{212}Bi	60.6 m	ß 655.0 α7741[e]	239(44) 583(34) 2615(38)	36.5	$^{224}Ra/^{212}Pb/^{212}Bi$
^{213}Bi	45.6 m	ß 425 α 8375	292(38)	-	$^{225}Ac/^{213}Bi/^{209}Pb$
^{252}Cf	2.6 y	α6099[e] SF	43(0.02)	26.9	

[a] E_{β}^{av}; intensity averaged of average ß energies= $\Sigma(E_{\beta}.I_{\beta})/\Sigma I_{\beta}$

[b] Total dose includes contributions from ß particles, secondary electrons, γ-, and X-rays, Reference (4).

[c] EC: Electron Capture

[d] IT: Isomeric Transition

[e] Intensity averaged

2. REACTOR-PRODUCED RADIOISOTOPES

2.0. Introduction

2.1. [n,γ], [2n,γ][2] and [n,n'γ] Reactions
  2.1.1. Production of ^{117m}Sn and ^{195m}Pt

2.2. [n,γ]($\beta^-\rightarrow$), [2n,γ]($\beta^-\rightarrow$) Reactions

2.3. [n,p] and [n,α] Reactions
  2.3.1. Production of carrier-free ^{47}Sc
  2.3.2. Production of carrier-free ^{64}Cu and ^{67}Cu

2.4. Reactor-Produced Parents for Radionuclide Generator Systems
  2.4.1. Production of ^{191}Os; ^{191}Os/^{191m}Ir generator
  2.4.2. Production of ^{188}W; ^{188}W/^{188}Re generator
  2.4.3. Production of ^{194}Os; ^{194}Os/^{194}Ir generator
  2.4.4. Production of ^{103}Ru; ^{103}Ru/^{103m}Rh generator

2.5. A Comparison Among Reactors for Radioisotope Production

2.6. Radioisotopic Purity

2.7. Radioisotopes From Both Accelerators and Fission Reactors

2.0 Introduction

Corresponding to the enormous energy range over which neutrons exhibit appreciable interactions with matter, there is a great variety in the types of interactions. From nuclear reactors alone, neutrons are available in sufficient intensity to make possible studies of interaction with matter from an energy range of 10^{-4} to 10^{7} eV, a range of 10^{11}. From the point of view of radioisotope production, we consider only three types of neutron reactions: neutron capture reactions [n,γ], inelastic scattering [n,n'γ] and peripheral interactions generally occurring at neutron energies of $\geq$ 1 MeV, such as [n,p], [n,α] and [n,2n] reactions.

[2][2n,γ] is notation used for double neutron capture: A[n,γ]B[n,γ]C.

The neutron capture reactions include thermal neutron reactions, where the cross-section typically decreases as the inverse of neutron velocity (1/v component), and also contributions from resonance neutrons, where the cross-section is a combination of the 1/v component and individual resonances. It is important to note the production rate of a radioisotope is a function of both the number of neutrons and their energies.

The production parameters for a variety of reactor-produced radioisotopes of interest in nuclear medicine and biology (Table 1.1) are given in this section. Due to the importance of specific activity, these data are arranged in a manner to emphasize this parameter. In the following tabulations, the production yields represent the half-saturation yields at neutron flux of 1×10^{14} $n.s^{-1}.cm^{-2}$ calculated by equating the irradiation time, t_b, to the half-life of the corresponding radioisotope product. In cases where the product nuclei is formed from decay of the reactor-produced parent, the yields were calculated as above, allowing a post irradiation decay period equal to the half-life of the daughter product. Unless otherwise indicated, the specific activity of the carrier-free[3] products was calculated by assuming 1 ppm of the product elements in the final preparations. The most likely source of these elements are stable nuclei formed through nuclear reactions, present as impurities in the original target material or introduced during chemical manipulations. All relevant nuclear data and unreferenced cross-section values were taken from reference 1 and 2.

2.1. [n,γ], [2n,γ], [n,n'γ] Reactions.

Examples of the radionuclides produced by the (n,γ) reaction are tabulated in Table 2.1.1, and include ^{64}Cu, ^{103}Ru, ^{103}Pd, ^{109}Pd, ^{117m}Sn, ^{153}Sm, ^{166}Ho, ^{186}Re, ^{191}Os, ^{192}Ir, ^{194}Ir and

[3] Carrier-free is defined as radioactive preparations to which no isotopic carrier (stable isotope) has been intentionally added.

^{195m}Pt. Among this list, ^{153}Sm, ^{166}Ho, ^{186}Re and ^{192}Ir can be produced with the highest specific activities. Examples of radioisotopes produced by double neutron capture, [2n,γ], reactions include ^{188}W, ^{194}Os, and ^{199}Au, and examples for the inelastic scattering reactions, [n,n'γ], are ^{117m}Sn and ^{195m}Pt. The corresponding nuclear data and reaction yields for these radioisotopes are summarized in Table 2.1.2.

In general, simple neutron capture or inelastic reactions do not yield products of high specific activities, since the product and the target isotopes have the same atomic number and in most cases are chemically inseparable. In these cases, the reaction yield and specific activity of the product are thus identical. In a few instances, however, where the total capture cross-section is exceedingly high, acceptable specific activity can be obtained by these reactions. Although the applicability for large scale production remains to be demonstrated, the Szilard-Chalmer process (3) offers an indirect method to increase the specific activity, as shown for ^{64}Cu [4,5] and ^{117m}Sn (6,7).

2.1.1. Production of ^{117m}Sn and ^{195m}Pt.

As indicated, ^{117m}Sn and ^{195m}Pt can be produced by both neutron capture and inelastic reactions (Tables 2.1.1. and 2.1.2). In fact, the advantage of production of high spin isotopes such as ^{117m}Sn via the ^{117}Sn(n,n'γ) reaction in the core of the BNL-HFBR has been demonstrated (8). Table 2.1.3. summarizes the data for a series of irradiations at different core positions in the HFBR using natural Sn and highly enriched ^{116}Sn and ^{117}Sn targets. For all three targets, the yields increase with the increase in fast neutron flux, even though the thermal flux decreases. The effect of "burn-up" in these cases was found to be small. These measurements indicate the importance of neutron reactions at the epithermal region to give increased yields of ^{117m}Sn due to strong neutron absorption resonances at neutron energies

of 4-125 eV. The highest specific activity, 8 mCi/mg at saturation, is obtained by irradiating ^{117}Sn at the core-position of HFBR rather than irradiating ^{116}Sn at the hydraulic tube of HFIR, despite a thermal neutron flux only 0.08 times that available at the HFIR.

Platinum-195m ($t_{1/2}$=4.02 d, 100% IT) is an ideal radiolabel for *cis*-dichlorodiammine-platinum(II) and other platinum-based antitumor drugs [9,10]. The yield of ^{195m}Pt produced by the $^{194}Pt(n,\gamma)$ reaction in the hydraulic tube of the HFIR is reported to be about 1.2 mCi/mg of Pt. This suprisingly low yield (specific activity) is attributed to the enormous $1.3x10^4$ b burn-up cross-section of ^{195m}Pt (9). Similar to ^{117m}Sn, higher specific activity ^{195m}Pt could in principle be obtained by the $^{195}Pt(n,n'\gamma)$ inelastic scattering reaction. In this alternate route, the burn-up could be substantially reduced by wrapping the target in Cd foil (which acts as a thermal neutron filter).

2.2. [n,γ](ß⁻→), [2n,γ](ß⁻→), [n,γ](ß⁻→)[n,γ] Reactions

In these reactions the product nuclei are the daughters of ß⁻-unstable nuclei which are formed in single or double neutron capture reactions. In these cases, the product nuclei are carrier-free and the specific activity of the product approaches the theoretical value. The parameters for production of ^{47}Sc, ^{105}Rh, ^{166}Ho, ^{192}Ir and ^{199}Au by these reactions are given in Table 2.2.1.

2.3. [n,p] and [n,α] Reactions

A few important [n,p] and [n,α] nuclear reactions are possible with neutrons available from reactors. These threshold reactions (peripheral interactions) are limited to production of radionuclides with low Z, since only a small fraction of the reactor neutrons have sufficient energies to overcome the potential barrier to charged particle emission. In some light

elements, where Coulomb barriers are low, threshold reactions may compete with [n,γ] reactions and resonances in certain nuclei may allow (n,p) and (n,α) reactions to proceed with epithermal neutrons. Examples include reactions such as $^{14}N[n,p]\ ^{14}C$ and $^{10}B(n,\alpha)^{7}Li$. The epithermal neutron cross-section of later reaction is $4x10^3$ b. Table 2.3.1 lists the radioisotopes of medical interest which are produced by [n,p] and [n,α] reactions in nuclear reactors. Reactors such as the FFTF and HFBR (see Chapter 3) are designed to make use of the fast neutron spectrum, and are obviously most suited for production of radioisotopes via [n,p] and [n,α], as well as [n,n'γ] and [n,2n], reactions. The latter two production modes were discussed in Section 2.1. In spite of small reaction cross-sections, these reactions lead to carrier-free products.

2.3.1. Production of Carrier-free ^{47}Sc

The reported cross-section for production of ^{47}Sc via the $^{47}Ti[n,p]$ reaction is only 11 mb (Table 2.3.1) (11). A production yield of 200 μCi/mg of ^{47}Ti in the hydraulic tube of the HFIR via the above reaction was recently reported (12). This measurement is substantially higher than measurement of Gladney *et al.* (13) at the Omega West reactor at the LANL (see Section 3.9). Assuming 1 ppm of Sc impurities in the enriched Ti target, a specific activity value of ~ 200 mCi/mg can be achieved. In addition to the [n,p] reaction, ^{47}Sc can be obtained from β^- decay of 4.54-h ^{47}Ca. Calcium-47 can be produced by the $^{46}Ca[n,\gamma]$ and/or $^{48}Ca[n,2n]$ reaction with cross-section values of 700 [2] and 20 (11) mb, respectively (Table 2.2.1). The expected yield of ^{47}Sc at half saturation from irradiation of a Ca target of natural abundance in the hydraulic tube of the HFIR is ~ 1 mCi/mg of $^{nat.}Ca$ in comparison to ~ 200 μCi/mg of ^{47}Ti via the [n,p] reaction.

2.3.2. Production of Carrier-Free ^{64}Cu and ^{67}Cu

Copper-64, and ^{67}Cu are attractive radionuclides for diagnosis and therapy with radiolabeled tumor-associated monoclonal antibodies and are produced by [n,p] reactions on ^{64}Zn and ^{67}Zn, respectively. By a series of irradiations ranging from a few hours to several days, the cross-section values for the $^{67}Zn[n,p]^{67}Cu$ reaction at two irradiation positions in the HFBR, in-core and core-edge (see Section 3.4), were found to be 1.23 ± 0.13 and 0.91 ± 0.10 mb, respectively (14a). The lower measured cross-section at the core-edge was attributed to the change in the shape of the neutron spectrum. An earlier measurement of 0.82 ± 0.04 mb was reported for the cross-section of the above reaction (15). The typical half-saturation yields of ^{64}Cu and ^{67}Cu in the hydraulic tube of the HFIR (see Section 3.5) are ~1 mCi/mg of ^{64}Zn and ~50 μCi/mg of ^{67}Zn, respectively (14b). Although, reactor-produced ^{64}Cu and ^{67}Cu suffer from low yields relative to proton-induced reactions (14a,b), the products have much higher specific activities since the target materials are highly enriched in zinc and depleted in copper. Routine reactor production of ^{67}Cu would complement seasonal accelerator production and ensure the availability of this important radioisotope throughout the year.

2.4. Reactor-Produced Parents for Radionuclide Generator Systems

The production of a variety of reactor-produced parent radioisotopes for radionuclide generator systems has been the subject of several reviews (16-21). The $^{99}Mo/^{99m}Tc$ generator system is a unique example, because a large variety of tissue-specific radiopharmaceuticals routinely used for various clinical procedures for diagnosis of diseases of the heart, lungs, skeleton, brain and tumor detection are prepared from ^{99m}Tc. This generator system is commercially available, and information regarding its production can be found elsewhere (22).

Other reactor-based generator systems which are under development are shown in Table 2.4.1. These systems fill a small, yet increasingly important need in providing daughter radioisotopes for medical diagnosis and therapy. These generators include the $^{191}Os/^{191m}Ir$ system which provides the ultra short-lived (4.9 s) ^{191m}Ir for first-pass evaluation of ventricular function (23-34). The $^{188}W/^{188}Re$ generator system (35-39), provides ^{188}Re for various therapeutic applications, most notably for attachment to tumor-specific antibodies for radioimmunotherapy (40-41). Other new examples are the $^{194}Os/^{194}Ir$ and $^{103}Ru/^{103m}Rh$ generator systems.

2.4.1. Production of ^{191}Os; $^{191}Os/^{191m}Ir$ Generator

Because of the widespread interest and benefits in the use of ultra short-lived radioisotopes ($t_{1/2}$ < 1 min) from generators for evaluation of ventricular function by radionuclide angiography (RNA), various prototypes of the $^{191}Os/^{191m}Ir$ generator have been developed (23-34). Iridium-191m has a half-life of only 4.96 s and decays by isomeric transition with the emission of a gamma photon with an energy of 129 keV (25 %) and several X-rays, all of which can be efficiently imaged with the Anger-type gamma cameras available in all nuclear medicine departments. The ^{191}Os parent has a half-life of 15 d and is reactor-produced by the $^{190}Os(n,\gamma)$ reaction. The parameters affecting the large-scale production of ^{191}Os were recently published by Brihaye *et al* (30). The production scheme and the corresponding cross-section values are shown in Figure 2.4.1. In this study the deviation of the experimental and theoretical yields were attributed to the burn-up of ^{191}Os to stable ^{192}Os with an estimated thermal-neutron cross-section of 740 b. The variation of the yield at the end of bombardment (EOB) as a function of irradiation period for neutron fluxes of $2.2x10^{14}$ and $2.5x10^{15}$ $n.s^{-1}.cm^{-2}$ is shown in Figure 2.4.2. The typical yield of ^{191}Os at EOB

for two weeks irradiation in the HFIR at $2.5x10^{15}$ $n.s^{-1}.cn^{-1}$ is about 0.5 Ci per mg of ^{190}Os (30).

2.4.2. Production of ^{188}W; $^{188}W/^{188}Re$ Generator

Currently, there is a considerable interest in ^{188}Re for medical applications (40-42). This interest is due to the following facts: a) Re is an analogue of Tc in chemical behavior and recent advances in the chemistry of Tc for biomedical applications of ^{99m}Tc could in principal be extended to Re (see reference 43 for an example), b) ^{188}Re is a suitable nuclei for radiotherapy applications and c) ^{188}Re is available from a generator system with an expected shelf-half life of several months. Tumor therapy with ^{188}Re-labeled antibodies and treatment of rheumatoid arthritis of the knee joints and other large synovial joints with ^{188}Re-labeled sulfur colloids are two major applications of this radioisotope (27,28).

Rhenium-188 is a β^- emitter and decays to the ground state of stable ^{188}Os 70.6% of the time ($E_{\beta 1}^{max}$=2.118 MeV) and to the first excited state 26% of the time ($E_{\beta 2}^{max}$=1.962 MeV) (29). The convenient 17.01 h (27) half-life, 100% β^- emission with high end-point energies result in an average β^- energy of 764 KeV make ^{188}Re an attractive candidate for therapeutic applications. The total radiation dose delivered to tissue by ^{188}Re is comparable with that of ^{90}Y ($t_{1/2}$=62 h, a pure β^- emitter with no imagable gamma-ray), which is currently used for antitumor therapy (44). The decay of ^{188}Re follows with emission of a predominant gamma ray with energy of 155 KeV with moderate intensity (15.8%) (42) which can be efficiently detected with gamma cameras for *in vivo* biodistribution and kinetic studies. These data can be subsequently used for absorbed radiation dose estimates, which are important in determining the effectiveness, safety and efficacy in using ^{188}Re-labeled agents for therapy.

Rhenium-188 is obtained in carrier-free state from decay of ^{188}W ($t_{1/2}$=69.4 d) in a generator system (27-29). The ^{188}W parent nuclei is produced in a nuclear reactor with

double neutron capture on ^{186}W (28.6 % natural abundance). The production scheme and the experimental and theoretical yields of ^{188}W from four reactors (HFIR, HFBR, MURR, and FFTF) and available maximum neutron fluxes are shown in Table 2.4.2. The experimental yield of ^{188}W at EOB from the HFIR at 85 MW power and for one cycle irradiation (~ 21 days) at a thermal neutron flux of $2x10^{15}$ $n.s^{-1}cm^{-2}$ is 4 mCi/mg of ^{186}W, which is lower than the theoretical value by almost a factor of five. However, for one day irradiation at the HFBR the yield of ^{188}W is lower than the theoretical value by a factor of two (45). As indicated in Table 2.4.2, the yield of ^{187}W at EOB is about 850 times higher than ^{188}W for a 21-d irradiation in the HFIR.

2.4.3. Production of ^{194}Os; $^{194}Os/^{194}Ir$ Generator

Iridium-194 ($t_{1/2}$=19.2 h) is a potential candidate (46) for radioimmunotherapy (RAIT) and decays by β^- emission (E_β^{av}= 805 keV) and also emits a weak gamma ray (318 keV, 13%) which would provide an evaluation of organ distribution by gamma camera imaging. Iridium-194 is obtained by β^- decay of ^{194}Os ($t_{1/2}$=5.9 y). Due to its shorter half-life than ^{90}Y (19.2 h vs 64.1 h) and due to its emission of the imagable gamma-ray ^{194}Ir is a superior nuclei to ^{90}Y which is currently in use for cancer therapy in patients (44). However, the therapeutic effect of ^{194}Ir is comparable to that of ^{90}Y since the mean equilibrium dose constants of ^{194}Ir and ^{90}Y are similar; 1.72 and 1.99 g-rad/μCi-h, respectively. Yttrium-90 is also generator based and is produced from decay of 27-y ^{90}Sr. The possibility of loss of free (ionic) ^{90}Y or the contamination of ^{90}Y radiopharmaceuticals for human use with ^{90}Sr is of major concern due to the *in vivo* toxicity of free ^{90}Y and ^{90}Sr (accumulation in bone). The $^{194}Os/^{194}Ir$ generator does not have this draw-back since neither osmium nor iridium concentrate in bone and both are excreted primarily through the urinary bladder.

Osmium-194 is produced by double neutron capture of ^{192}Os (natural abundance of 41%). An attempt has been made to measure the cross-section of the $^{193}Os(n,\gamma)$ reaction since the reported values differ significantly (2,47). By irradiating an enriched ^{192}Os target at the core-position of the HFBR, a thermal-neutron cross-section of 250 b was calculated for the above reaction (Table 2.4.3) (47). Based on these preliminary results, 12 mCi of ^{194}Os can be expected by irradiating 25 mg of enriched ^{192}Os at HFIR for 60 days ($\phi^{th}_{n}=2x10^{15}$ $n.s^{-1}.cm^{-2}$) (48).

2.4.4. Production of ^{103}Ru for the $^{103}Ru/^{103m}Rh$ Generator

Rhodium-103m ($t_{1/2}$=65.1 m) is a potential radionuclide for radioimmunotherapy when introduced into the cell nucleus. The expected high cytotoxicity of ^{103m}Rh is due to secondary electrons and low energy x-rays which follow its decay, subsequent to total conversion of the 40 keV isomeric decay energy. Carrier-free ^{103m}Rh can be made available through the $^{103}Ru/^{103m}Rh$ generator system. The ^{103}Ru parent nuclei can be produced in a nuclear reactor via the $^{102}Ru(n,\gamma)$ and $^{103}Rh(n,p)$ reactions (see Tables 2.1.1 and 2.3.1) and from ^{235}U fission.

2.5 A Comparison Among Reactors for Isotope Production

A comparison among reactors for the production of 30 medical radioisotopes for several reactor/irradiation positions are given in Table 2.5.1. In this table, the neutron capture reaction rates ($reactions.s^{-1}.atom^{-1}$) are used as a measure of production parameter. The calculation of the production rates was made by Schenter *et al.* (49) using computer codes developed for isotope transmutation and decay which solve the "Bateman" type differential equations. Input to these calculations were cross-sections, decay constants, and branching ratios (both capture and decay). Neutron capture rates determine both "burn in"

and "burn out" of target and product isotopes, respectively. The production rate values are for the "infinite dilute" targets; either small target masses or well-distributed (noncompact) targets. For this analysis the resonance self-shielding and flux perturbation effects are neglected. In any practical situation, these effects need to be considered since they can lead to as much as an order of magnitude reduction in production rate, depending on target size and density. The data shown in Table 2.5.1 show a large variation in the production rates ranging from 4.9×10^{-14} to 7.0×10^{-5} reactions.s^{-1}.$atom^{-1}$, depending on a variety of parameters including the radioisotope, reactor, and irradiation position. For most cases, the primary capture process is the (n,γ) reaction. For this radiative capture, the reaction rate usually peaks in the thermal or epithermal energy ranges, depending on the thermal cross section, the resonance integral, and the location of the lowest-lying resonance.

The comparative production rates of ^{67}Cu, ^{145}Sm and ^{165}Dy, as examples, are given in Figures 2.5.1 - 2.5.3, respectively. In these figures, activities versus irradiation times are shown for several thermal and fast reactor/irradiation positions. These cases were chosen to illustrate three different reactor types which produce the highest levels of activity. Figure 2.5.1 illustrates the production of ^{67}Cu in various reactor/irradiation positions. Figures 2.5.2 shows the production results for ^{145}Sm. As seen in Figures 2.5.1 and 2.5.2, for production of ^{67}Cu and ^{145}Sm the fast energy components dominate, as in the FFTF and EBR2. The comparative productions of ^{165}Dy starting with a ^{164}Dy target are shown 2.5.3. The 2.33-h ^{165}Dy is of interest for the treatment of arthritis of the knee and other large "synovial" type joints. The highest levels for ^{165}Dy occur in reactors with a strong thermal component such as HFIR and ATR. However, in the FFTF, the "hydride" type of target assembly has an epithermal flux-per-unit lethargy value comparable to the flux levels in most thermal reactor systems. Consequently, (n,γ) production rate comparisons can easily be made between these

reactor systems by comparing the thermal cross section with the resonance integral for the target isotope.

A comparison of achievable specific activities of several radioisotopes for thermal and fast reactors are shown in Figure 2.5.4. As seen, ^{14}C, ^{55}Fe, ^{60}Co, and ^{165}Dy are produced very effectively in the predominantly thermal systems, such as the HFIR, ATR, and MURR, whereas ^{153}Sm, ^{186}Re, ^{188}W and ^{194}Os, are produced better in the "hydride" assemblies in the FFTF and EBR2, and the HFIR-PTP. Fast spectrum production is enhanced for ^{153}Gd and ^{145}Sm in the FFTF and EBR2 core positions. Finally, ^{109}Cd and ^{125}I are about evenly produced about equally in all reactor systems.

In conclusion, the yields and the specific activities of radioisotopes in fast and thermal reactors vary significantly depending on the specific target/product isotope combination. Generally, medical radioisotope production yields for fast reactors, such as the FFTF and the Experimental Breeder Reactor (EBR2), complemented thermal reactor production estimates in the ATR, HFBR, HFIR, and MURR. Some radioisotopes are produced more efficiently in thermal reactor systems, while fast reactor systems offer significant production advantages for other specific isotopes. The results presented here, although not covering reactor target volume availability or all possible core positions, should help in determining U.S. radioisotope production strategies. It is believed that such comparative production calculations can be used to more efficiently plan and optimize radioisotope production in the limited available fission reactor facilities.

2.6. Radioisotopic Purity

In the production of almost every medical radioisotope, the radioisotopic purities are of crucial importance and co-production of undesirable radioisotopes or "impurities" needs to be addressed. In most cases, the radioisotope impurities need to be chemically separated.

In the production of ^{145}Sm, for example, several unwanted isotopes of Eu are also coproduced primarily from neutron transmutations of $^{147-154}Sm$ which are present in a small amounts in the enriched ^{144}Sm target. Table 2.5.3 gives the relative activities of ^{152}Eu, ^{154}Eu, and ^{155}Eu produced in four reactors/irradiation positions. Burn-in and burn-out effects play a very important role, since most of these europium and samarium radioisotopes have very large capture cross sections.

Other examples of co-production of radioisotope impurities include production of unwanted ^{192}Ir from ^{190}Os targets in the production of ^{191}Os and ^{194}Os, and the ^{191}Os impurity detected in reactor-produced ^{188}W.

2.7. Radioisotopes from Both Accelerators and Fission Reactors

There are a number of medical radioisotopes which can be effectively produced in either accelerator or fission reactor systems. Copper-67 is a good example, where its production in both the Brookhaven Linac Isotope Producer (BLIP), the HFBR and HFIR were studied in detail (14). A list of radioisotopes which can be produced in either a fission reactor or an accelerator (Linac or cyclotron) include ^{18}F, ^{47}Sc, ^{64}Cu, ^{67}Cu, ^{109}Cd and ^{125}I.

In addition to the neutron reactions discussed earlier, "dual projectile" reactions can also be used to access the some neutron deficient nuclei. In this approach, the secondary light charged particles (tritium nuclei, alphas, protons) produced in the neutron capture or neutron induced reactions are used as projectiles in a second reaction. The neutron striking the primary target produces the charged particle, and the charged particle striking the secondary target produces the desired radioisotope. This method has been examined for the production of ^{18}F (50). The process is following sequence:

1) $^{6}Li[n,\alpha]^{3}H$ (Q=+4.78 MeV)

2) $^{16}O[t,n]^{18}F$ (Q=+1.27 MeV)

where an inorganic compound of lithium such as lithium carbonate was used as the target material. This process takes advantage of the very large thermal and epithermal cross section of ^{6}Li for production of tritium nuclei which are used as the projectile in the 2nd reaction.

References

1. Table of Isotopes, (Lederer C. M. and Shirley V. S. Eds), 7th edn, Wiley, New York (1978).

2a. Neutron Cross Sections, (Mughabghab, S. F., Divadeenam, M. and Holden, N. E.), Vol 1, Part A, Z=1-69, Academic Press, (1981).

2b. Neutron Cross Sections, (Mughabghab, S. F.), Vol 1, Part B, Z=61-100, Academic Press, (1984).

3. Szilard, L. and Chalmers, T. A., *Chemical Separation of the Radioactive Element from its Bombarded Isotope in Fermi Effect*, Nature, **134**, 462 (1934).

4. Herr W. and Gotte H., *Preparation of Practically Carrier-free ^{64}Cu from High Activity Cu Phthalocyanine*, Z. Naturforsch, **5a**, 629 (1950).

5. Hetherington, E. L., Sorby, P. J. and Camakaris, J., *The Preparation Of High Specific Activity Copper-64 for Medical Diagnosis*, Appl. Radiat. Isot. **37**, 1242 (1986).

6. Spano, H., and Kahn, M., *Enrichment of Tin Activity Through the Szilard-Chalmers Separation*, J. Amer. Chem. Soc., **74**, 568 (1952).

7. Mausner, L. F., Mirzadeh, S. and Srivastava, S. C. *Improved Specific Activity of Reactor Produced ^{117m}Sn with Szilard-Chalmers Process*, Appl. Radiat. Isot., in press.

8. Mausner, L. F., Mirzadeh, S. M. and Wards, T. E., *Nuclear Data for Production of Sn-117m for Biomedical Applications*, J. Radiat. Effects, **94**, 59 (1986).

9. Hoeschele, J. D., Butler, T. A., Roberts, J. A. and Guyer, C. E., *Analysis and Refinement of the Microscale Synthesis of the cis-Dichlorodiammine Platinum (II), cis-DDP*, Radiochemica Acta, **31**, 27 (1982).

10. Wyrich, S. D. and Ghaney, S. G., *Synthesis of [^{195m}Pt]-Tetraplatin*, J. Labelled Compounds and Radiopharmaceuticals, **XXVIII**, 753 (19??).

11. Calamand, A. *Cross-sections for Fission Neutron Spectrum Induced Reaction*, in Handbook on Nuclear Activation Cross-sections, Technical Report Series No. **156**, IAEA, Vienna (1974).

12. Mausner, L. F. (unpublished data – personal communication).

13. Gladney, E. S. and Goode, W. E., *Preparation of Carrier-free ^{47}Sc by the ^{47}Ti(n, γ) Reaction with Epithermal Neutrons*, Appl. Radiat. Isot., **37**, 29 (1986).

14a. Mirzadeh, S., Mausner, L. F. and Srivastava, S. C., *Production of No Carrier-added ^{67}Cu*, Appl. Radiat. Isot., **37**, 29 (1986).

14b. Mirzadeh, S., and Knapp, F.F. Jr., *Spontaneous Electrochemical Separation of Carrier-free Copper-64 and Copper-67 from Zinc Targets,* Radiochimica Acta (1992), in press.

15. O'Brien, H. A. Jr., *The Preparation of ^{67}Cu from ^{67}Zn in a Nuclear Reactor*, Appl. Radiat. Isot., 20, 121 (1969).

16. Stang, L. *Radionuclide Generators: Past, Present, and Future*, Brookhaven National Laboratory Monograph (BNL 50186, T-541) (1969).

17. Lebowitz, E. and Richards, P. *Radionuclide Generator Systems*, in Seminars in Nuclear Medicine **4**, 257 (1974).

18. Finn, R. D., Molinski, V. J., Hupf, H. B., and Kramer, H. *Radionuclide Generators for Biomedical Applications*, in Nuclear Sciences Series, Nuclear Medicine, United States Department of Energy, NAS-NS-3202 (DE83016360), 97 (1983).

19. Lambrecht, R. M., *Radionuclide Generators*, Radiochimica Acta 34, 9 (1984).

20. Radionuclide Generators: New Systems for Nuclear Medicine Applications, Knapp, F. F. Jr. and Butler, T. A., Eds, ACS Symposium Series No. 241 (1984).

21. Mani, R. S., *Reactor Production of Radionuclides for Generators*, Radiochimica Acta, **41**, 103 (1987).

22. Boyd, R. E., *Molybdenum-99: Technetium-99m Generator*, Radiochimica Acta, **30**, 123 (1982).

23. Treves, S., Cheng C., Samuel, A., Lambrect, R., Babchyck, B., Zimmerman, R., and Norwood, W. *Iridium-191 Angiocadiography for the Detection and Quantitation of Left-to-Right Shunting*, J. Nucl. Med., **21**, 1151 (1980).

24. Butler T. A., Guyer C. E., and Knapp F. F., Jr., *Reactor Production of Osmium-191: Factors Important for Clinical Application of the Os-191/Ir-191m Ultra Short-Lived Radionuclide Generator*, Proc. of the 3rd World Congress of Nuclear Medicine and Biology, Paris, France, Aug. 29-Sept. 2, 617 (1982).

25. Brihaye, C., Butler, T. A., and Knapp, F. F. Jr., *The Os-191/Ir-191m Generator for Clinical Use. I. Evaluation of Potential Absorbents*, J. Radioanalyt. and Nucl. Chem., **102**, 399 (1986).

26. Brihaye, C., Butler, T. A., Knapp, F. F. Jr., and Guillaume, M., *A New Osmium-191/Iridium-191m Radionuclide Generator System Using Activated Carbon*, J. Nucl. Med., **27**, 380 (1986).

27. Packard A. B., Treves S., and O'Brien G. M., *An Osmium-191/-Iridium-191m Generator Using An Oxalate Osmate Parent Complex*, J. Nucl. Med., **28**, 1571 (1987).

29. Guillaume, M., and Brihaye, C., *Generators of Ultra-short Lived Radionuclides for Routine Clinical Applications*, Radiochimica Acta **41**, 119 (1987).

30. Brihaye C., Dewez S., Guillaume M., Callahan A. P., Rice D. E., and Knapp F. F. Jr., *Reactor Production and Purification of Osmium-191 for Use in a New Osmium-191/Iridium-191m Radionuclide Generator System*, Appl. Radiat. and Isotopes, **40**, 183 (1989).

31. Issachar, D., Abrashkin, S., Weiniger, J., Zemach, D., Lubin, E., Hellman, C., and Trumper, D., *Osmium-191/Iridium-191m Generator Based on Silica Gel Impregnated with Tridodecylmethylammonium Chloride*, J. Nucl. Med., **30**, 538 (1989).

32. Hellman, C., Zafrir, N., Shimoni, A., Issacher, D., Trumper, J., Abrashkin, S., and Lubin, E., *Evaluation of Ventricular Function with First-Pass Iridium-191m Radionuclide Angiography*, J. Nucl. Med. **30**, 450 (1989).

33. Franken, P. R., Dobbeleir, A., Ham, H. R., Brihaye, C., Guillaume, M., Knapp, F. F., Jr., and Vandevivere, J., *Ultrashort-Lived Iridium-191m from a New Carbon-Based Generator System for Left Ventricular First-Pass Angiocardiography*, J. Nucl. Med., **30**, 1025 (1989).

34. Franken, P. R., Dobbeleir, A. A., Ham, H. R., Ranquin, R., Lieber, S., Van Den Branden, F., Van Den Heuvel, P., Brihaye, C., Guillaume, M., Knapp, F. F., Jr., and Vandevivere, J., *Discrepancy Between Myocardial Perfusion and Regional Wall Motion at Rest and During Exercise in Patients with Coronary Artery Disease*, Nucl. Med. Comm., **12**, 473 (1991).

35. Blachot, J., Hermment, J. and Moussa, A., *Un Générateur de ^{188}Re à Partir de ^{188}W*, Appl. Radiat. Isot., **20**, 467 (1968).

36. Muxeeb, H., Пonobuy, B., Pymep, H., Cabeabeb, Г., Boakoba, H., *ГeHepaTop PeHHR-188*, Isotopenpraxis, **8**, 248 (1972).

37. Ehrhardt, G., Ketring, A. P., Turpin, T. A., Razavi, M.S., Vanderheyden, J.-L. and Fritzberg, A. R., *An Improved Tungsten-188/Rhenium-188 Generator for Radiotherapeutic Applications*, J.Nucl. Med. **28**, 656 (1987).

38. Callahan, A. P., Rice, D. E. and Knapp, F. F., Jr., *Rhenium-188 for Therapeutic Applications from an Alumina Based Tungsten-188/-Rhenium-188 Radionuclide Generator*, NucCompact - Eur./Amer. Commun. Nucl. Med. **20**, 3 (1989).

39. Kodina, G., Tulskaya, T., Gureev, E., Brodskaya, G., Gapurova, O. and Drosdovsky, B. *Production and Investigation of Rhenium-188 Generator*, in Technetium and Rhenium in Chemistry and Nuclear Medicine 3 (M. Nicolini and G. Bandoli, editors), Corina International, (1990), pp 635-641.

40. Venkatesan, P. P. Shortkroff, S., Zalutsky, M. R., and Sledge, C. B., *Rhenium Hepasulfide: A Potential Carrier System for Radiation Synovectomy*, Nucl. Med. Biol., **17**, 357 (1990).

41. Griffiths, G. L., Knapp, F. F., Jr., Callahan, A. P., Chang, C.-H., Hansen, H. J., and Goldenberg, D. M., *Direct Radiolabeling of Monoclonal Antibodies with Generator-Produced Rhenium-188 for Radioimmunotherapy*, Cancer Research, **51**, 4594 (1991).

42. Coursey, B. M., Calhoun, J. M., Cessna, J., Hoppes, D. D., Golas, D. B., Schima, F. J., Unterweger, M. P., Callahan, A. P., Mirzadeh, S., and Knapp, F. F., Jr., *Assay of the Eluent from the Alumina-based Tungsten-188-Rhenium-188 Generator*, Radioactivity and Radiochemistry, **3**, 38 (1990).

43. Eckelman, W. C. and Steigman, J., *Direct Labeling with Technetium-99m*, Nucl. Med. Biol. **18**, 3 (1991).

44. Sharkey, R. M., Kaltovich, F. A., Shih, L. B., Fand, I., Govelitz, G. and Goldenberg, D. M. *Radioimmunotherapy of Human Colonic Cancer Xenografts with ^{90}Y-Labeled Monoclonal Antibodies to Carcinoembryonic Antigen*, Cancer Res. **48**, 3270 (1988).

45. Mirzadeh, S., (1983) unpublished data.

46. Mirzadeh, S., Callahan, A. P., and Knapp, F. F., Jr., *Iridium-194 —A New Candidate for Radioimmunotherapy (RAIT) from an Osmium-194/Iridium-194 Generator System*, 38th Annual Meeting of the Society of Nuclear Medicine, Cincinnati, Ohio, June 11-14, 1991, J. Nucl. Med., (1991).

47. Report BNL 325 3rd Ed. (Mughabghab, S. F. and Carber, D. J.) Vol. 1, U.S. Government Printing Office, Washington D.C. (1973).

48. Mirzadeh, S., Knapp, F. F., Jr., and Callahan, A. P., *Production of Tungsten-188 and Osmium-194 in a Nuclear Reactor for New Clinical Generators*, Proceeding of International Conference on Nuclear Data for Science and Technology, May 1991, Julich, FRG, (S. M. Qaim Ed.) ISBN 0-387-55100x, Springer Verlag, NY (1992) pp 595-597.

49a. Schenter R. E., Lawrence, M. C. and Whitten, B. D., Radioisotope Production Technology Development, Westinghouse Hanford Co., Report WHC-SP-0583 (1990).

49b. Schenter R. E., Birney, J. K., Lawrence, M. C. and Whitten, B. D., Radioisotope Production Technology Development, Westinghouse Hanford Co., Reprot WHC-SP-0632 (1991).

50. Knight J. D., Norey T. B., Cannon C. V. and Turkevich A. Radiochemical Studies: The Fission Products, BK3, pp 1916-1923, McGraw Hill, NY (1951).

51. Alexander, C. W., Halperin, J., Knauer, J. B. and Walker, R. L., *The Thermal Neutron Capture Cross-sections and Resonance Integrals of* ^{144}Sm and ^{145}Sm, Nucl. Sci. Eng., **95**, 194 (1987).

52. Linder, M., Phys. Rev., **84**, 240 (1951).

53. Willams, D. C. and Naumann, R. A., Phys. Rev., **134** B289 (1964).

54. Casten, R. F., Namenson, A. I., Davidson, W. F., Warner, P. D. and Borner, H. G., Physics Letters, **76B**, 280 (1978).

55. Mirzadeh, S., (1992) unpublished data.

Table 2.1.1. Examples of Reactor-Produced Radioisotopes via [n,γ] Reactions

Product Radionuclide	$t_{1/2}$	Target Nuclide (Nat. Ab., %)	Production Cross-sections, b		$\sigma_{burn\text{-}up}$, b	yield,[b] mCi/mg	Reference
			thermal	RI[a]			
^{60}Co	5.27 y	$^{59}Co(100)$	$3.7x10^{1}$ (m+g)	$7.4x10^{1}$	2.0	7.5×10^{1} [c,d]	2
^{64}Cu	12.7 h	$^{63}Cu(69.2)$	4.5	5.0	$6.0x10^{3}$	6.4×10^{1}	2
^{103}Ru	39.4 d	$^{102}Ru(31.6)$	1.2	4.2	-	1.3×10^{1}	2
^{103}Pd	17.0 d	$^{102}Pd(1.02)$	3.4	$1.0x10^{1}$	-	2.8×10^{1}	2
^{109}Pd	13.4 h	$^{108}Pd(26.2)$	8.3	$2.4x10^{2}$	-	2.5×10^{2}	2
^{117m}Sn	13.9 d	$^{116}Sn(14.7)$	$6.0x10^{-3}$	$4.9x10^{-1}$	-	3.9×10^{-1}	2
^{145}Sm	340 y	$^{144}Sm(3.1)$	1.64	2.4	$2.8x10^{2}$	5.4 [d]	51
^{153}Sm	46.8 h	$^{152}Sm(26.7)$	$2.1x10^{2}$	$2.9x10^{3}$	$3.1x10^{3}$	2.7×10^{3}	2
^{165}Dy	2.3 h	$^{164}Dy(28.2)$	$2.7x10^{3}$ (m+g)	$3.4x10^{2}$	$3.6x10^{3}$	1.3×10^{4}	2
^{166}Ho	26.8 h	$^{165}Ho(100)$	$6.3x10^{1}$	$6.5x10^{3}$	-	6.2×10^{2}	2
^{186}Re	90.6 h	$^{185}Re(37.4)$	$1.1x10^{1}$	$1.7x10^{3}$	-	1.3×10^{3}	2
^{191}Os	15.4 d	$^{190}Os(26.4)$	$1.4x10^{1}$ (m+g)	$2.2x10^{1}$	$7.4x10^{2}$	6.9×10^{1} [c]	30
^{192}Ir	74.2 d	$^{191}Ir(37.3)$	$9.5x10^{2}$ (m1+g)	$3.5x10^{3}$	$\geq 1.1x10^{3}$	2.3×10^{3}	2
^{194}Ir	19.2 h	$^{193}Ir(62.7)$	$1.1x10^{2}$	$1.4x10^{3}$	-	1.0×10^{3}	2
^{195m}Pt	4.02 d	$^{194}Pt(32.9)$	$9.8x10^{-2}$	3.1	$1.3x10^{4}$	1.4	2&9
^{198}Au	2.69 d	$^{197}Au(100)$	$9.9x10^{1}$	$1.6x10^{3}$	$2.5x10^{4}$	8.5×10^{2}	2

[a] Resonance Integral. [b] At EOB, $t_b=t_{1/2}$, $\phi_n=1x10^{14}$ $ns^{-1}cm^{-2}$, 100% enriched targets. Calculations include: target depletion factor, contributions from resonance integrals [taken $(\phi_{th}/\phi_r)=10.0$] and burn-up. [c] Includes contribution from production of metastable state. [d] $t_b=180$ d.

Table 2.1.2. Examples of Reactor-Produced Radioisotopes by the [2n,γ] and [n,n'γ] Reactions

Product Radionuclide	$t_{1/2}$	Target Nuclide [Reaction] (Nat. Ab., %, or $t_{1/2}$)	Production Cross-sections, b thermal	RI[a]	yield,[b] mCi/mg	Ref.
^{117m}Sn	13.6 d	^{117}Sn(7.7)[n,n'γ]	0.2 [c1]	-	1.3	8
^{188}W	69 d	^{186}W(28.6)[n,γ]^{187}W(23.8 h)[n,γ]	38, 64 [d]	485, 2760 [d]	1.4	2
^{195m}Pt	4.02 d	^{195}Pt(33.8)[n,n'γ]	0.5 [c2]	-	2.0	55
^{194}Os	6.0 y	^{192}Os(41.0)[n,γ]^{193}Os(30.0 h)[n,γ]	2, 250 [d]	-	2.7×10^{-3} [e]	48
^{199}Au	3.14 d	^{197}Au(100)[n,γ]^{198}Au(2.69 d)[n,γ]	99, 25100 [d]	1550, -	2.4×10^{2}	2

a) Resonance Integral.
b) At EOB, $t_b=t_{1/2}$, $\phi_n=1\times10^{14}$ $ns^{-1}cm^{-2}$, 100% enriched targets. Calculations include: target depletion factor, contributions from resonance integrals [taken $(\phi_{th}/\phi_r)=10.0$] and burn-up.
c) Effective cross-section; c1) HFBR (60 MW) V15 $\phi_f=3.0\times10^{14}$, c2) HFIR (85 MW) HT, $\phi_f=4.0\times10^{14}$
d) Corresponding to the 1st and 2nd reactions.
e) $t_b=180$ d.

Table 2.1.3. Reactor Production of ^{117m}Sn

Target	Irradiation location	Primary nuclear reactions	Saturation yield (mCi/mg)
^{nat}Sn	V-14[a]	(n,γ),(n,n'γ),(n,2n)	0.55
^{nat}Sn	V-15[b]	(n,γ),(n,n'γ),(n,2n)	1.27
^{116}Sn	V-14	(n,γ)	2.3
^{117}Sn	V-14	(n,n'γ)	2.2
^{116}Sn	V-15	(n,γ)	5.0
^{117}Sn	V-15	(n,n'γ)	8.0
^{116}Sn	HT[c]	(n,γ)	4.0

Reactor/Position	ϕ_{ts}, $n.s^{-1}.cm^{-2}$	ϕ_{fs}, $n.s^{-1}.cm^{-2}$
[a] HFBR core-edge (60 MW)	8.25×10^{14}	9.0×10^{13}
[b] HFBR in-core (60 MW)	1.95×10^{14}	3.0×10^{14}
[c] HFIR hydrulic tube (100 MW)	2.5×10^{15}	4.7×10^{14}

Table 2.2.1. Examples of Reactor-Produced Radioisotopes; [n,γ]($\beta^- \rightarrow$), [n,2n]($\beta^- \rightarrow$), [2n,γ]($\beta^- \rightarrow$) and [n,γ]($\beta^- \rightarrow$)[n,γ] Reactions.

Product Radionuclide	$t_{1/2}$	Target Nuclide [Reaction] (Nat. Ab., %)	Production Cross-section, b thermal	RI[a]	Yield,[b] mCi/mg	Sp.Act.[c] mCi/mg
^{47}Sc	3.35 d	^{46}Ca(0.004)[n,γ]^{47}Ca(4.54 d)($\beta^- \rightarrow$)	7.4×10^{-1}	9.6×10^{-1}	1.1×10^{1} [d1]	1.1×10^{7}
		^{48}Ca(0.187)[n,2n]^{47}Ca(4.54 d)($\beta^- \rightarrow$)	2.0×10^{-2}	-	~ 1 [d1]	~ 1×10^{6}
^{105}Rh	35.5 h	^{104}Ru(18.7)[n,γ]^{105}Ru(4.4 h)($\beta^- \rightarrow$)	4.7×10^{-1}	4.3	4.2 [d2]	4.2×10^{6}
^{166}Ho	26.8 h	^{164}Dy(28.2)[n,γ]$^{165g\&m}$Dy(1.3 m & 2.35 h)	2.7×10^{3}	6.5×10^{3}		
		[n,γ]^{166}Dy(81.5h)($\beta^- \rightarrow$)	3.9×10^{3}	2.2×10^{4}	4.7×10^{1} [d3]	4.7×10^{7}
^{192}Ir	74.0 d	^{190}Os(26.4)[n,γ]$^{191g\&m}$Os(13.1 h,15.4 d)	1.3×10^{1}	2.2×10^{1}		
		($\beta^- \rightarrow$)^{191}Ir[n,γ]	9.5×10^{2}	2.2×10^{3}	7.7 [d4]	7.7×10^{6}
^{199}Au	3.14 d	^{198}Pt(7.2)[n,γ]^{199}Pt(30.8 m)($\beta^- \rightarrow$)	3.7	-	1.5×10^{1} [d5]	1.5×10^{7}

a) Resonance Integral
b) At EOB, $\phi_n = 1\times10^{14}$ ns^{-1}cm^{-2}, 100% enriched targets, contribution from resonance integrals are not included.
c) A 1-ppm impurity of the product element in the target was assumed

d)	t_b	t_{decay}	
1	4.54 d	3.35 d	
2	35.5 h	4.4 h	
3	81.5 h	0	
4	74.0 d	0	(included a burn-up cross-section of 1.1×10^{3} b for ^{192}Ir[n,γ] reaction)
5	3.14 d	2.0 h	

Table 2.3.1. Examples of Reactor-Produced Radioisotopes; [n,p] Reactions

Product Radionuclide	$t_{1/2}$	Target Nuclide [Reaction] (Nat. Ab., %)	$\sigma_{fission\ averaged}$, mb	Yield,[a] μCi/mg	Sp. Act., mCi/mg[b]	Ref.
^{14}C	5.73×10^3 y	^{14}N(99.6)[n,p]	1.8	2.5×10^{-2} [c]	2.5×10^1	11
^{47}Sc	3.35 d	^{47}Ti(7.4)[n,p]	1.1×10^1	1.9×10^2	1.9×10^5	11
^{64}Cu	12.7 h	^{64}Zn(48.6)[n,p]	3.1×10^1	3.9×10^2	3.9×10^5	14
^{67}Cu	2.6 d	^{67}Zn(4.1)[n,p]	1.23 ± 0.13	1.5×10^1	1.5×10^4	14
^{103}Ru	39.6 d	^{103}Rh(100)[n,p]	0.22	1.74	1.7×10^3	11

a) At EOB, $t_b = t_{1/2}$, $\phi_n = 1 \times 10^{14}$ $ns^{-1}cm^{-2}$, 100% enriched target.
b) A 1-ppm impurity of the product element in the target was assumed.
c) $t_b = 1$ y.

Table 2.4.1. Reactor-Produced Parents for Radionuclide Generator Systems.

Generator Systems Parent/Daughter	Parent $t_{1/2}$	Daughter $t_{1/2}$	Reaction for Production of the Parents	Ref.
$^{90}Sr \rightarrow (\beta^-)\ ^{90}Y$	28.5 y	2.7 d	$^{233,235,238}U$ or $^{239,241}Pu[n,f]$	-
$^{103}Ru \rightarrow (\beta^-)\ ^{103m}Rh$	39.6 d	65.1 m	$^{102}Ru[n,\gamma]$ $^{103}Rh[n,p]$	-
$^{188}W \rightarrow (\beta^-)\ ^{188}Re$	69 d	16.9 h	$^{186}W[2n,\gamma]$	35-39
$^{191}Os \rightarrow (\beta^-)\ ^{191m}Ir$	15.4 d	4.94 s	$^{190}Os[n,\gamma]$	30
$^{194}Os \rightarrow (\beta^-)\ ^{194}Ir$	6.0 y	19.2 h	$^{192}Os[2n,\gamma]$	46,48

Table 2.4.2. Production of Tungsten-188

Reactor/ Irradiation position	Power MW	Neutron Flux, $n.s^{-1}cm^{-2}$ Thermal (2200 ms^{-1})	Fast (≥ 1 MeV)	Target mass, g as WO_3 (Enrichment, %)	Irradiation Period	Yield, mCi/mg at EOB ^{187}W	^{188}W [e]
HFIR-ORNL							
HT position #5	100	$2.5x10^{15}$	$1 x 10^{15}$	10.3 (97.3)	21 d	NM	4.49
" #5	85	$2 x 10^{15}$	$8 x 10^{14}$	49.2 (96.07)	19.5 d	NM	3.94
" #3	85	$2 x 10^{15}$	$8 x 10^{14}$	50.2 (96.07)	21.1 d	$3.25x10^{3}$	3.88
" #5	85	$2 x 10^{15}$	$8 x 10^{14}$	50.2 (96.07)	~ 40 d [c]	NM	6.22
HFBR-BNL							
V-14(core-edge)	60	$8.25x10^{14}$	$9.0x10^{13}$	4.97 (97.06)	24.0 h	NM	$2.62x10^{-2}$ [b]
				8.03 (97.06)	24.0 h	NM	$2.57x10^{-2}$
MURR							
Flux Trap	10	$4.5x10^{14}$	?	92.1 (96.07)	63.4 d	NM	~ 0.3
FFTF-Hanford							
	291	$(2\text{-}3)x10^{13}$	$(1\text{-}2)x10^{14}$ [a]	14.0 (96.07)	10 d	-	$3.89x10^{-2}$ [d]
				12.7 (96.07)	10 d	-	$3.81x10^{-2}$

[a]Epithermal flux per unit lethargy, [b]Mirzadeh *et al.* (1983), [c]Several short and a 3-d shut down, [d]Schenter *et al.* (1990)
[e]Gamma-rays used for activity measurements : ^{187}W; 685.5 keV (31.6%) and ^{188}W; 155.0 keV (15.1%) from ^{188}Re
EOB = End of Bombardment, HT = Hydraulic Tube, NM = not measured

Table 2.4.3. Production of Osmium-194

Nuclear Reactor	ϕ_n^{th}, $n.s^{-1}cm^{-2}$	Target mass, mg[b] *(Enrichment, %)*	T_{irr}	$\sigma_{fission\ av}$, b	Yield, μCi/mg	Ref.
HFBR-BNL	$4.5x10^{14}$ [a]	27.1 *(99.3)*	24 d	240±40[c]	7.3	48
ORNL-Graphite	~ $1x10^{12}$	?	?	200	-	52
MTR	$3x10^{14}$	50 (?)	150 d	8	-	53
?	?	?	?	1540	-	47
ILL/ GAMS1-3	$8x10^{14}$	84 *(99.1)*	on-line	38±10	-	54

[a] Measured; $^{58}Fe[n,\gamma]^{59}Fe$ flux monitoring reaction with σ=1.28 mb.
[b] As Os metal.
[c] Taking σ=2.0±0.1 b for $^{192}Os[n,\gamma]^{193}Os$.

Table 2.5.1 Capture Reaction Rates for Production of Radioisotopes in Several Fast and Thermal Reactors/Irradiation Positions.

Radio isotope	Capture Reaction Rates[a] (10^{-9} reaction.s^{-1}.$atom^{-1}$) for Several Reactor/Irradiation Positions						
	ATR-A11	EBR2-Hyd	FFTF-Core	FFTF-Hyd	HFBR-V15	HFIR-PTP	MURR-FT
^{14}N	$0.3x10^{-2}$	$3.0x10^{-2}$	$2.0x10^{-2}$	$2.0x10^{-2}$	$2.0x10^{-2}$	$1.0x10^{-1}$	$2.0x10^{-2}$
$^{14}N^{b}$	7.8	1.8	$1.9x10^{-1}$	8.2	7.6	$3.5x10^{1}$	8.3
^{59}Co	$1.2x10^{2}$	5.3	2.0	$2.5x10^{1}$	$1.3x10^{1}$	$4.6x10^{1}$	$1.0x10^{1}$
^{60}Co	$8.2x10^{-1}$	$3.3x10^{-1}$	$1.8x10^{-1}$	1.3	1.0	3.3	$7.7x10^{-1}$
^{67}Cu	3.1	1.8	3.1	7.5	5.0	$1.1x10^{1}$	2.4
$^{67}Cu^{b}$	$1.0x10^{-3}$	$4.9x10^{-5}$	$2.4x10^{-3}$	$1.5x10^{-4}$	$4.0x10^{-4}$	$1.4x10^{-4}$	$1.3x10^{-4}$
^{98}Mo	$4.2x10^{-1}$	$4.3x10^{-1}$	$6.4x10^{-1}$	1.7	$9.5x10^{-1}$	$9.8x10^{-1}$	$1.4x10^{1}$
^{107}Ag	$1.6x10^{1}$	6.8	4.0	$2.9x10^{1}$	$1.9x10^{1}$	$6.1x10^{1}$	$1.4x10^{1}$
^{108}Cd	1.0	$9.0x10^{-1}$	1.8	3.4	2.1	3.1	$5.7x10^{-1}$
^{109}Cd	$5.2x10^{2}$	$2.03x10^{-2}$	5.9	$1.1x10^{2}$	$7.8x10^{2}$	$1.6x10^{2}$	$3.2x10^{2}$
^{124}Xe	$1.8x10^{2}$	$1.1x10^{2}$	$1.5x10^{1}$	$4.9x10^{2}$	$2.7x10^{2}$	$4.7x10^{2}$	$8.0x10^{1}$
^{126}Xe	2.0	1.5	5.2	5.9	3.4	6.8	1.4
^{125}I	$9.0x10^{2}$	$5.0x10^{2}$	$5.0x10^{1}$	$2.0x10^{3}$	$1.0x10^{3}$	$2.5x10^{3}$	$4.0x10^{2}$
^{144}Sm	$6.0x10^{-1}$	$2.5x10^{-1}$	$5.7x10^{-1}$	1.0	$7.3x10^{-1}$	2.5	$5.8x10^{-1}$
^{145}Sm	$1.14x10^{2}$	$3.9x10^{1}$	3.8	$1.74x10^{2}$	$1.27x10^{2}$	$3.8x10^{2}$	$1.02x10^{2}$
^{152}Sm	$1.9x10^{2}$	$1.08x10^{2}$	4.7	$5.4x10^{1}$	$2.8x10^{2}$	$5.3x10^{2}$	$9.3x10^{1}$

Table 2.5.1 (Cont'd)

Radio-isotope	Capture Reaction Rates[a] (10^{-9} reaction.s^{-1}.$atom^{-1}$) for Several Reactors/Irradiation Positions						
	ATR-A11	EBR2-Hyd	FFTF-Core	FFTF-Hyd	HFBR-V15	HFIR-PTP	MURR-FT
^{151}Eu	$2.8x10^{3}$	$6.8x10^{2}$	$2.6x10^{1}$	$3.1x10^{3}$	$2.9x10^{3}$	$1.2x10^{4}$	$2.8x10^{3}$
^{152}Eu	$3.4x10^{3}$	$6.3x10^{2}$	6.7	$2.2x10^{3}$	$2.9x10^{3}$	$1.5x10^{4}$	$3.8x10^{3}$
^{154}Eu	$6.2x10^{2}$	$1.7x10^{2}$	$2.0x10^{-1}$	$1.0x10^{3}$	$6.8x10^{2}$	$2.7x10^{4}$	$6.7x10^{2}$
^{152}Gd	$2.3x10^{2}$	$6.0x10^{2}$	8.6	$2.5x10^{2}$	$2.3x10^{2}$	$1.0x10^{3}$	$2.4x10^{2}$
^{153}Gd	$1.5x10^{4}$	$2.6x10^{3}$	7.8	$8.5x10^{3}$	$1.2x10^{4}$	$7.0x10^{4}$	$1.7x10^{4}$
^{164}Dy	$7.9x10^{2}$	$1.6x10^{2}$	4.5	$7.0x10^{2}$	$7.3x10^{2}$	$3.6x10^{3}$	$8.8x10^{2}$
^{165}Dy	$2.2x10^{3}$	$8.6x10^{2}$	$1.5x10^{1}$	$4.0x10^{3}$	$3.0x10^{3}$	$7.2x10^{3}$	$1.5x10^{3}$
^{185}Re	$1.12x10^{2}$	$6.0x10^{1}$	$1.1x10^{1}$	$2.7x10^{2}$	$1.8x10^{2}$	$3.0x10^{2}$	$5.2x10^{2}$
^{186}W	$3.3x10^{1}$	$2.0x10^{1}$	1.6	$8.2x10^{1}$	$4.7x10^{1}$	$9.1x10^{1}$	$1.7x10^{1}$
^{187}W	$1.9x10^{1}$	$1.1x10^{1}$	2.7	$5.0x10^{2}$	$3/3x10^{2}$	$4.3x10^{2}$	6.5
^{190}Os	$4.2x10^{1}$	$1.0x10^{1}$	1.4	$4.7x10^{1}$	$4.1x10^{1}$	$1.8x10^{2}$	$4.4x10^{1}$
^{192}Os	$6.5x10^{-1}$	$1.8x10^{-1}$	$2.2x10^{-2}$	$8.2x10^{1}$	$6.6x10^{-1}$	2.8	$6.6x10^{-1}$
^{194}Pt	$3.5x10^{-1}$	$1.8x10^{-1}$	$9.0x10^{-2}$	$7.7x10^{-1}$	$5.2x10^{-1}$	1.3	$2.8x10^{-1}$
^{226}Ra	$1.9x10^{1}$	8.8	2.6	$4.9x10^{1}$	$3.3x10^{1}$	$4.6x10^{1}$	7.4

[a)] (n,γ) reactions, except as otherwise specified. [b)] (n,p) reaction

Table 2.5.2. Achievable Specific Activities of Reactor-produced Medical Radioisotope in Various Reactors/Irradiation Positions.

Product Isotope	Target Isotope	Specific Activities (mCi/mg of target)						
		Reactors-Irradiation Positions						
		ATR-A11	EBR2-Hyd	FFTF-Core	FFTF-Hyd	HFBR-V15	HFIR-PTP	MURR-FT
^{14}C[a]	^{14}N	1.8	4.0×10^{-1}	1.9	1.9	1.8	7.7	1.9
^{55}Fe	^{55}Fe	2.0×10^{1}	9.0	8.0	1.0×10^{1}	1.2×10^{1}	2.0×10^{1}	1.8×10^{1}
^{67}Cu[a]	^{67}Zn	1.6×10^{-1}	1.0×10^{-2}	5.3×10^{-1}	2.0×10^{-2}	9.0×10^{-2}	2.3×10^{-1}	3.0×10^{-2}
^{60}Co	^{59}Co	9.0×10^{1}	4.0×10^{1}	1.0×10^{1}	6.0×10^{1}	4.0×10^{1}	8.0×10^{1}	5.0×10^{1}
^{109}Cd	^{107}Ag	4.4	7.5	8.0	7.5	6.0	4.1	3.6
^{109}Cd	^{108}Cd	4.8	9.8	8.0	7.6	6.5	4.	4.4
^{125}I[a,b]	^{124}Xe	1.2×10^{1}	8.0	1.0×10^{1}	1.5×10^{1}	1.3×10^{1}	1.2×10^{1}	1.0×10^{1}
^{145}Sm	^{144}Sm	9.5	3.6	4.0×10^{1}	1.2×10^{1}	1.1×10^{1}	1.2×10^{1}	9.5
^{153}Sm	^{152}Sm	1.9×10^{4}	1.1×10^{4}	2.0×10^{4}	4.8×10^{4}	2.7×10^{4}	4.7×10^{4}	1.0×10^{4}
^{153}Gd	^{152}Gd	5.5×10^{1}	2.0×10^{1}	5.4×10^{2}	1.0×10^{2}	6.5×10^{1}	5.0×10^{1}	5.0×10^{1}
^{165}Dy	^{164}Dy	7.0×10^{4}	4.0×10^{4}	6.0×10^{4}	6.0×10^{4}	1.3×10^{5}	3.3×10^{5}	8.0×10^{4}
^{186}Re	^{185}Re	9.5×10^{3}	5.0×10^{3}	8.0×10^{3}	2.3×10^{4}	1.6×10^{4}	2.5×10^{4}	4.5×10^{3}
^{188}W	^{186}W	4.5	1.7	2.5×10^{1}	3.8×10^{1}	1.2×10^{1}	3.7×10^{1}	9.0×10^{-1}
^{194}Os	^{192}Os	3.0	8.0×10^{-1}	1.0×10^{-1}	4.0	2.8	8.0	3.0

[a] Product is carrier-free and the specific activity represent the theoretical value; mCi/mg of product. [b] Ci per cm^3 of target.

Table 2.5.3. Relative Activities of Eu Isotopes Produced as Impurities in the Reactor Produced ^{145}Sm from Enriched ^{144}Sm Targets[a]

	Relative activities of Eu isotopes to the saturation activity of ^{145}Sm			
	Reactors-Irradiation Positions			
Isotope	FFTF-Core	HFIR-PTP	HFBR-V15	MURR-FT
^{152}Eu	4.0×10^{-7}	2.0×10^{-9}	5.0×10^{-8}	3.0×10^{-8}
^{154}Eu	1.0×10^{-4}	1.0×10^{-3}	2.0×10^{-2}	2.0×10^{-2}
^{155}Eu	1.0×10^{-4}	1.0×10^{-3}	1.0×10^{-2}	1.0×10^{-2}
^{145}Sm	1.0	1.0	1.0	1.0

[a)]Elemental composition of enriched ^{144}Sm

^{144}Sm 96.47 (atom percent)

^{147}Sm 1.08

^{148}Sm 0.56

^{149}Sm 0.54

^{150}Sm 0.24

^{154}Sm 0.65

^{154}Sm 0.46

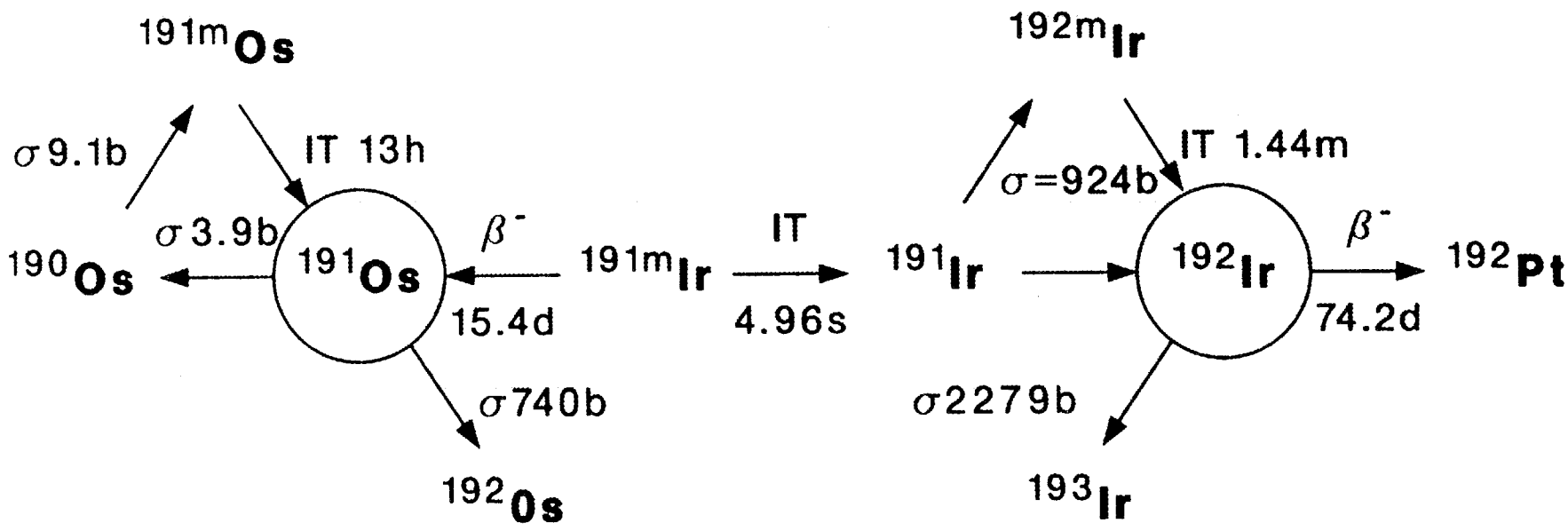

Figure 2.4.1. Production scheme of ^{191}Os, showing the production and decay modes of major radionuclides produced in neutron irradiation of highly enriched ^{190}Os (Taken from reference 30).

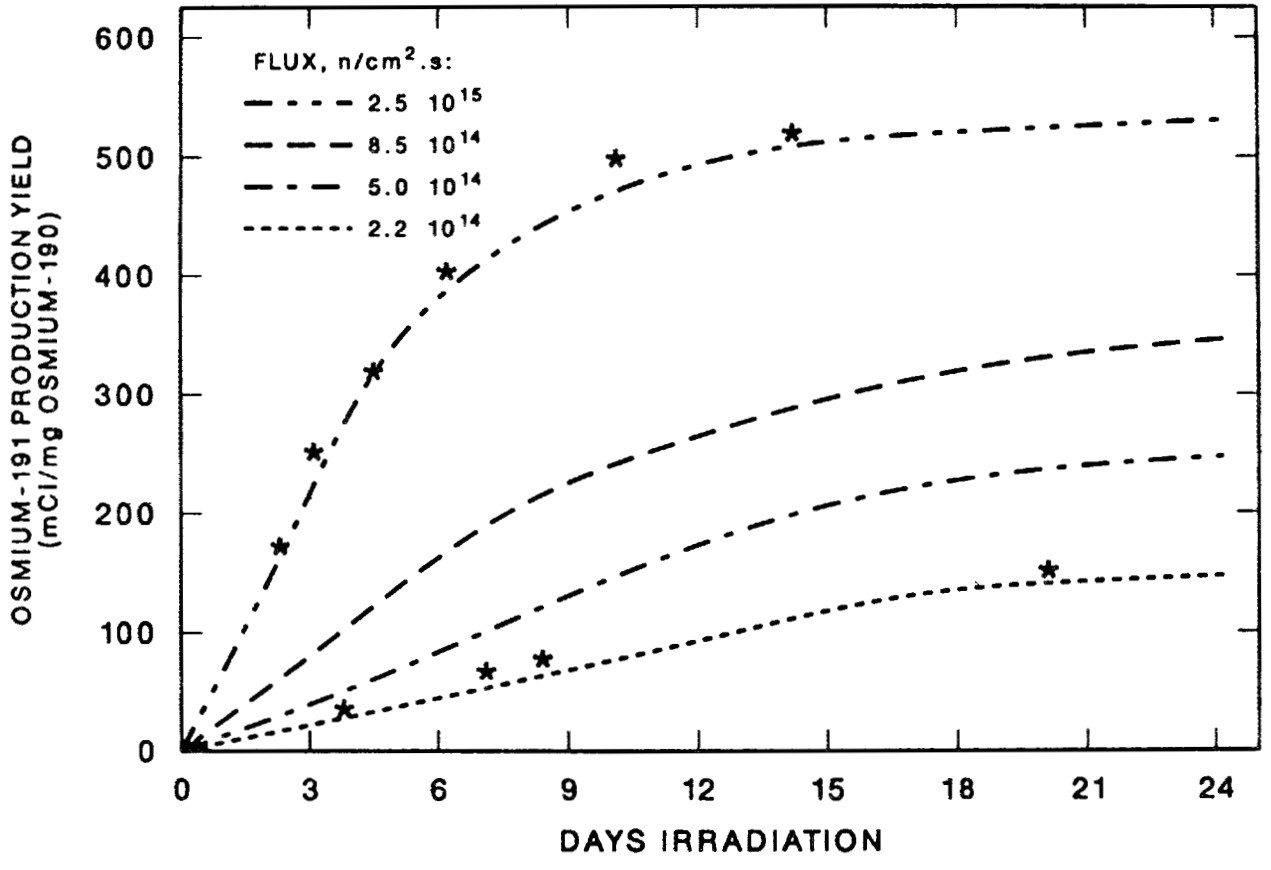

Figure 2.4.2. Production yield of ^{191}Os at EOB as a function of irradiation time for various neutron fluxes; curves represent the theoretical and stars are experimental data (Taken from reference 30).

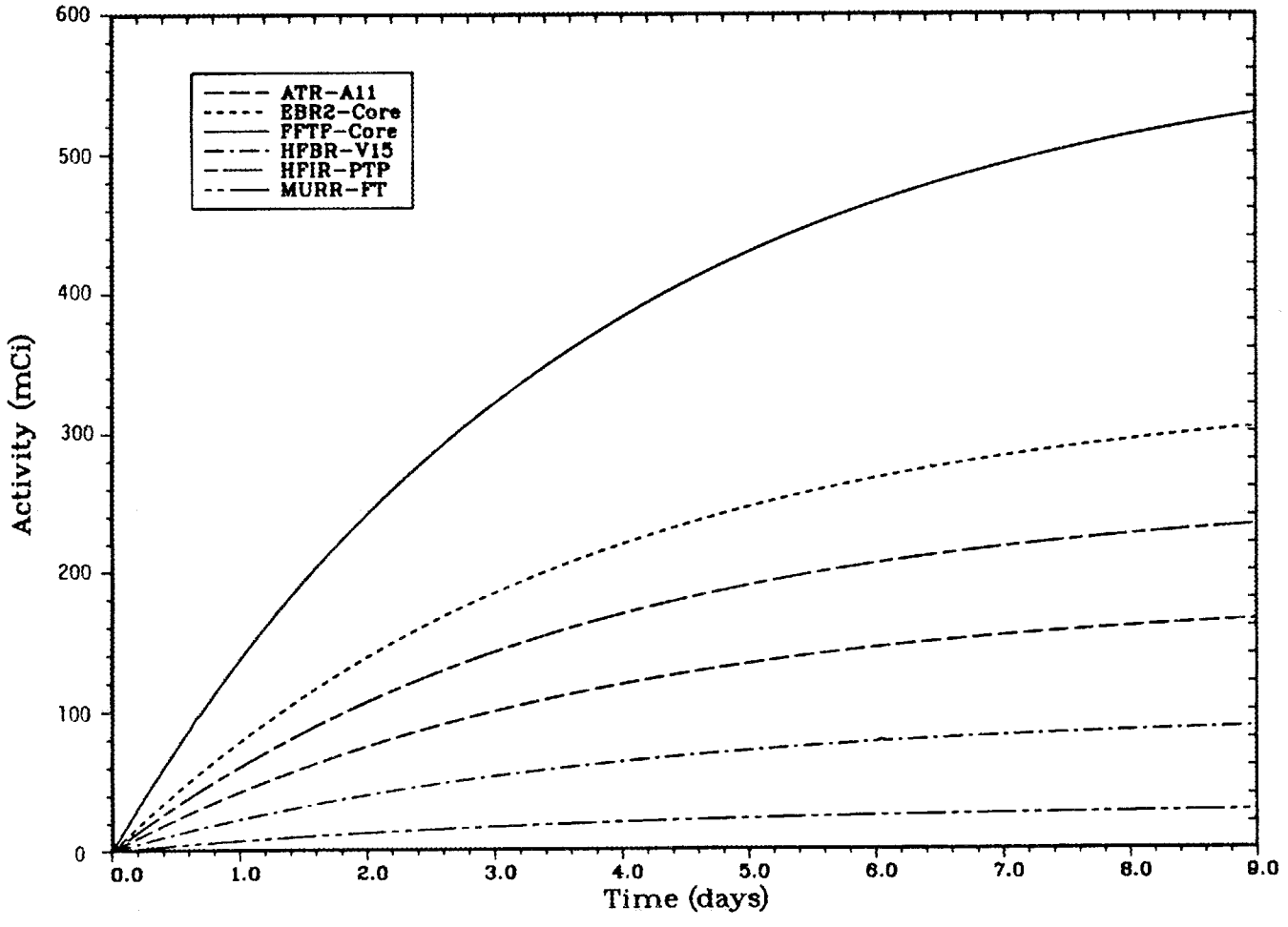

Figure 2.5.1. Production yield of ^{67}Cu at EOB as a function of irradiation time in several Reactors/Irradiation Positions

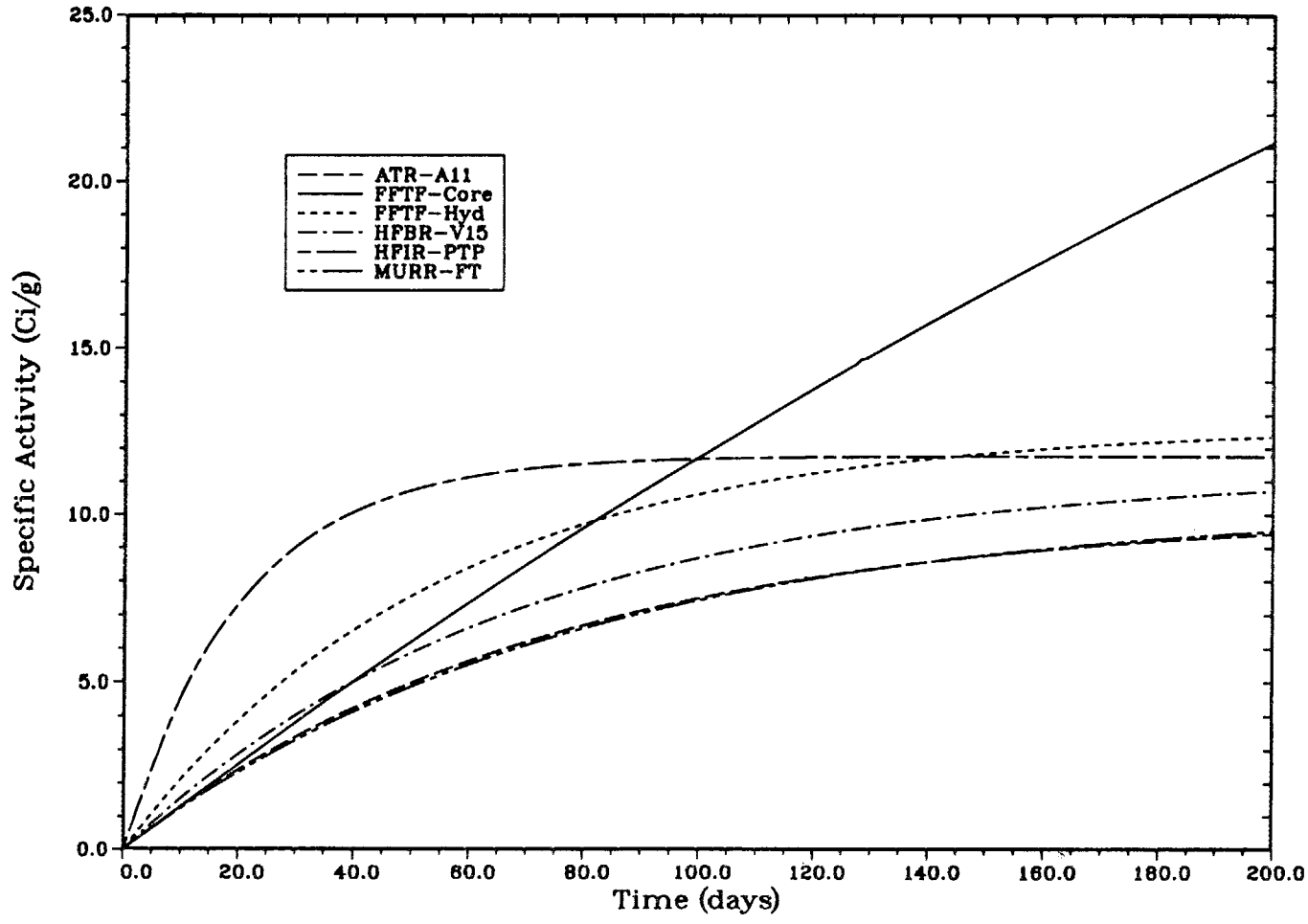

Figure 2.5.2. Production yield of ^{145}Sm ($^{144}Sm[n,\gamma]$) at EOB as a function of irradiation time in several Reactors/Irradiation Positions

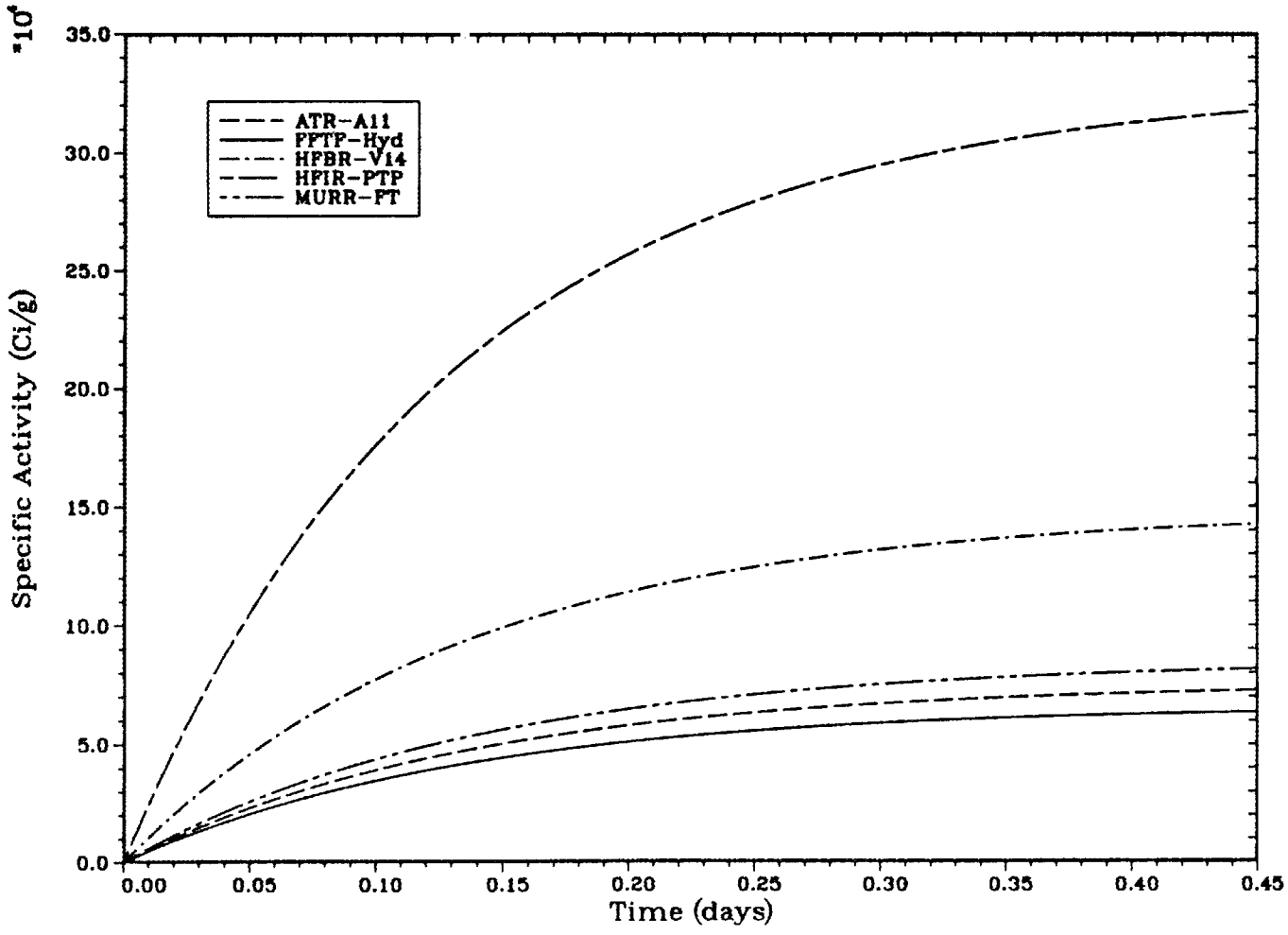

Figure 2.5.3. Production yield of ^{165}Dy ($^{164}Dy[n,\gamma]$) at EOB as a function of irradiation time in several Reactors/Irradiation Positions

3. PRINCIPAL RESEARCH NUCLEAR REACTORS IN THE UNITED STATES.

			page
3.0.		Introduction	3.0.1-3.0.7
3.1.	ATR:	Advance Test Reactor, Idaho National Engineering Laboratory.	3.1.1-3.1.11
3.2.	FFTF:	Fast Flux Test Facility, Westinghouse Hanford Company	3.2.1-3.2.12
3.3.	GTRR:	Georgia Institute of Technology Research Reactor	3.3.1-3.3.8
3.4.	HFBR:	High Flux Beam Reactor, Brookhaven National Laboratory	3.4.1-3.4.14
3.5.	HFIR:	High Flux Isotope Reactor, Oak Ridge National Laboratory	3.5.1-3.5.27
3.6.	MITR-II:	Massachusetts Institute of Technology Research Reactor	3.6.1-3.6.11
3.7.	MURR:	Missouri University Research Reactor	3.7.1-3.7.11
3.8.	OSTR:	Oregon State University Triga Reactor	3.8.1-3.8.21
3.9.	OWR:	Omega West Reactor, Los Alamos National Laboratory	3.9.1-3.9.10

3.0 Introduction

In this chapter, we have compiled information regarding nine U.S. research nuclear reactors. Some of this information which includes a brief description of each reactor and their capabilities was supplied by the staff of these reactors. This material has been directly incorporated into the survey, with the exception of editing in order to have a consistency in format and syntax. Among the reactors which are discussed here are the Advanced Test

Reactor (ATR) at the Idaho National Engineering Laboratory and the Fast Flux Test Facility (FFTF) at the Westinghouse Hanford Company, both of which until recently, have been involved in defense related research and breeding reactor programs and were not easily accessible. However, in the past two years there have been serious efforts to allow other research to be conducted in these reactors, and most recently, attempts have been made to convert the FFTF to an "open" research reactor.

In describing the above reactors, some aspects of each reactor have been discussed in more detail than others in order to provide the potential user with a broader view of all the aspects of "production of radioisotopes in a nuclear reactor." For example, the engineering design and the irradiation target facilities of HFIR, Section 3.5, has been discussed in more detail than other reactors. For detailed estimates of irradiation costs and available services, we refer the potential users to section 3.7 describing the MURR as an example. A detailed discussion of the general limitations and safety requirements for irradiation of material in a nuclear reactor are given in Sections 3.4 and 3.8, describing the HFBR and OSTR, respectively.

A comparison of the maximum operating power of nine reactors evaluated in this report is given in Table 3.0.1. This table also includes the maximum total neutron flux values available from these reactors and the thermal, epithermal, and fast neutron fluxes at the hydraulic rabbit tubes, if this information is available.

A key parameter that primarily determines the differences between various reactors for production of radioisotopes is the effective neutron flux spectrum at the irradiation position. Both the magnitude and shape of the spectrum are important. In Table 3.0.2, flux values for several irradiation positions of the reactors are given for three energy groups; "Thermal" (E_n <0.25 eV, Maxwellian distribution), "Epithermal" or resonance neutrons (0.25

$\leq E_n \leq 100$ keV), and "Fast" ($0.1 < E_n < 16$ MeV). The flux values represent the energy-averaged fluxes over the corresponding energy groups [$\phi_n = (\Sigma E_n \cdot \phi_n)/\Sigma E_n$]. As indicated, among various reactors these flux values vary over a wide range from 1×10^{12} to 6×10^{15} $n.cm^{-2}.s^{-1}$. From a standpoint of the type of interaction, fast neutrons are usually distinguished from intermediate energy, or epithermal neutrons, because most resonance reaction occur with epithermal neutrons. This distinction between fast and epithermal neutrons is rather vague. However, from our standpoint, we consider fast neutrons as those above 100 keV, for which individual resonances are not observed in a "typical" nuclei.

In Figure 3.0.1, the flux density curves are given for five reactors and seven irradiation positions for a broad energy range of 1.0×10^{-2} eV to 10 MeV. As seen, the highest thermal flux is obtained in the HFIR. At the epithermal region, highest flux of 2×10^{14} $n.cm^{-2}.^{-1}$ can be found in the Hydride position of FFTF (Figure 3.0.1). In this reactor, the epithermal spectrum at the Hydride facility is enhanced by the use of a metal hydride moderator (Schenter and Myjak, 1988). This characteristic of FFTF is similar to that of the EBR2 (description of the EBR2 is not included in the report). The irradiation facilities providing large epithermal fluxes are most suitable for production of radioisotopes via neutron capture process with large contributions from resonance integrals. A comparison of the fast neutron fluxes are shown in Figure 3.0.2. The core of the FFTF has the highest fast neutron flux ($E_n > 0.1$ MeV, fission spectrum shape). Production of radioisotopes via threshold or peripheral reactions [e.g. (n,p), (n,α), and (n,n'γ) reactions] which are dominated by the high energy contribution, are best achieved in the following order, core of FFTF, HFIR-PTP, HFBR-V14 or -V15. As discussed in section 2.3, production of ^{67}Cu from ^{67}Zn targets is a good example of this type of reaction, where essentially all of the production occurs at neutrons with energy greater than 2 MeV.

Table 3.0.1. Operating Power Level and Available Maximum Neutron Fluxes

Reactor	Operating Power	Maximum Neutron Flux, $n.s^{-1}.cm^{-2}$			
		Total	Hydraulic Rabbit Tube		
			Thermal (0-0.25 eV)	Epithermal (0.25 eV-100 keV)	Fast (0.1-16 MeV)
ATR	250	$1.4x10^{15}$	None		
FFTF	450	$7.8x10^{15}$	None (proposed)		
GTRR	5	$1.6x10^{13}$	$6.5x10^{13}$	$1.7x10^{12}$	$2.9x10^{12}$
HFBR	30	$1.2x10^{15}$	$7.5x10^{13}$	-	$4.5x10^{10}$
HFIR	85	$2.5x10^{15}$	$2.2x10^{15}$	-	$1.7x10^{15}$
MITR-II	5	~ $1x10^{14}$	$6x10^{13}$	$1.5x10^{11}$	$5x10^{12}$
MURR1	10	$4.0x10^{14}$	-	-	-
OSTR	1*	$3.4x10^{13}$	$1.0x10^{13}$	$4.0x10^{11}$	-
OWR	8	$1.9x10^{14}$	9.6×10^{13}	-	-

*Pulsed up to 3,000 MW

Table 3.0.2 Group Neutron Fluxes for Various Reactor/Irradiation Positions.

Reactor/Irradiation position		Group Neutron Flux ($n.cm^{-2}.s^{-1}$)			
		Thermal (0-0.25 eV)	Epithermal (0.25 eV-1 MeV)	Fast (1-16 MeV)	Total Flux
ATR	A11	$3.6x10^{14}$	$6.7x10^{14}$	$4.1x10^{14}$	$1.4x10^{15}$
	B4	$4.5x10^{14}$	$5.3x10^{14}$	$1.5x10^{14}$	$1.1x10^{15}$
	B10	$1.9x10^{14}$	$1.7x10^{14}$	$3.0x10^{13}$	$3.9x10^{14}$
EBR2	Core	$0.0x10^{12}$	$1.9x10^{15}$	$7.6x10^{14}$	$2.6x10^{15}$
	Hyd/Core	$9.0x10^{13}$	$1.1x10^{15}$	$6.0x10^{13}$	$1.3x10^{15}$
FFTF	Core	$0.0x10^{12}$	$6.6x10^{15}$	$1.4x10^{14}$	$7.8x10^{15}$
	Hyd/Core	$5.2x10^{14}$	$3.8x10^{15}$	$2.0x10^{14}$	$4.5x10^{15}$
	Hyd/MOTA	$1.0x10^{13}$	$3.3x10^{15}$	$3.7x10^{14}$	$3.8x10^{15}$
GTRR	H1	$2.4x10^{13}$	-	-	$2.5x10^{13}$
HFBR	V14	$4.2x10^{14}$	$3.8x10^{14}$	$4.5x10^{13}$	$8.5x10^{14}$
	V15	$1.0x10^{14}$	$1.3x10^{15}$	$1.5x10^{13}$	$1.5x10^{15}$
HFIR	TP	$2.2x10^{15}$	-	$1.1x10^{14}$	$2.3x10^{15}$
	HT	$2.2x10^{15}$	-	$1.7x10^{14}$	$2.4x10^{15}$
	PTP	$1.6x10^{15}$	$1.5x10^{15}$	$5.8x10^{14}$	$3.8x10^{15}$
	RB4	$5.3x10^{15}$	$6.9x10^{14}$	$1.1x10^{14}$	$1.3x10^{15}$
MITR-II	Core	$3x10^{13}$	$3x10^{13}$	$\sim 1x10^{13}$	$\sim 7x10^{13}$
	RH	$6x10^{13}$	$1.5x10^{11}$	$3.3x10^{12}$	$6.3x10^{13}$
	GV	$8x10^{12}$	$7x10^{10}$	-	$8.7x10^{12}$
MURR	FT	$4.2x10^{14}$	$1.6x10^{14}$	$7.0x10^{13}$	$6.5x10^{14}$
	RF	$1.5x10^{14}$	$7.0x10^{13}$	$1.0x10^{13}$	$2.3x10^{14}$
OWR	Core	$9.0x10^{13}$	-	-	-
	SVP	$1.6x10^{13}$	$5.0x10^{12}$	-	-
OSTR	PTT	$1.0x10^{13}$	$4.0x10^{11}$	-	$1.0x10^{13}$
	RR	$3.0x10^{12}$	$1.2x10^{11}$	-	$3.1x10^{13}$

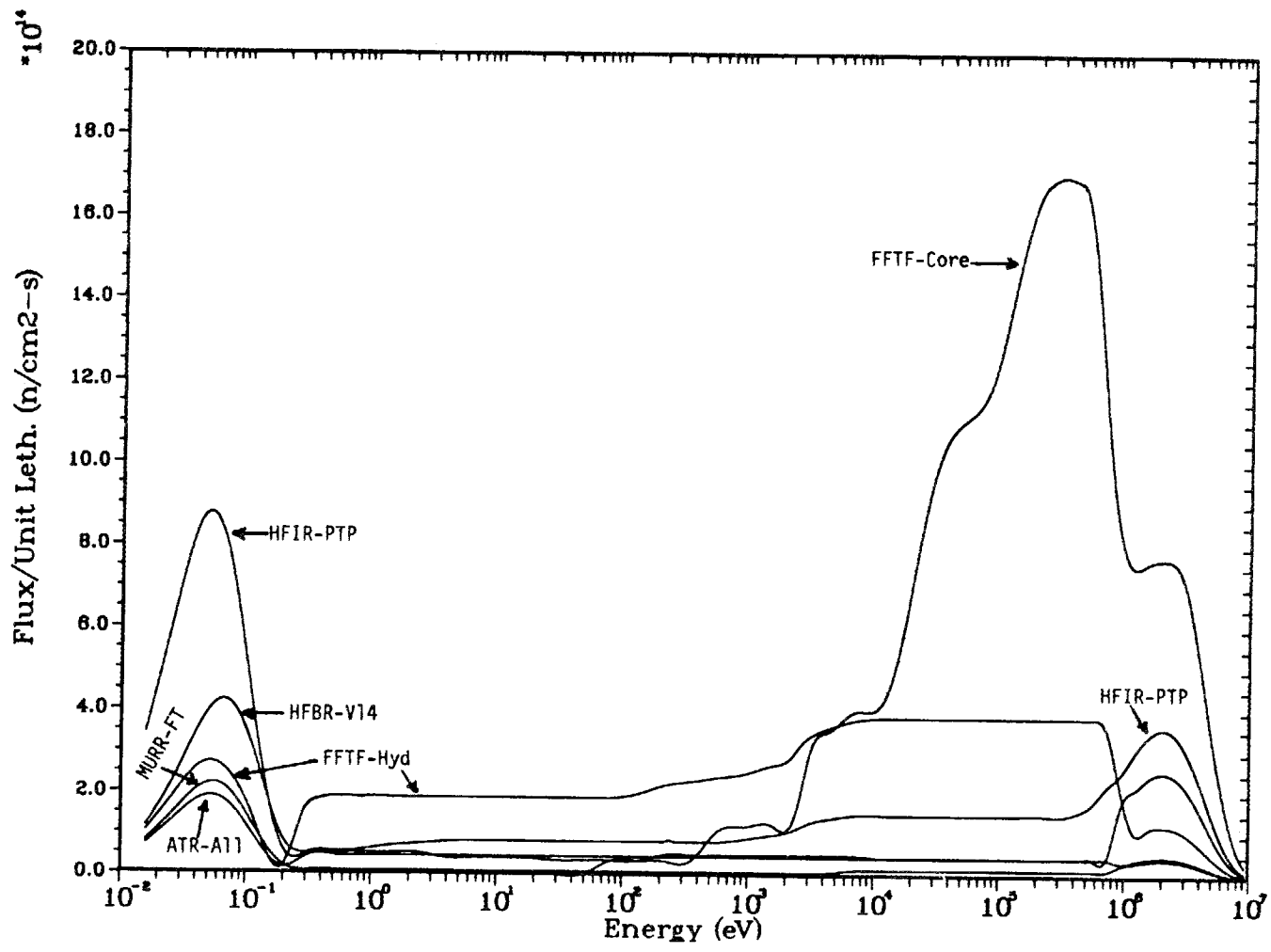

Figure 3.0.1. Neutron Spectrum in various Reactors/Irradiation Positions

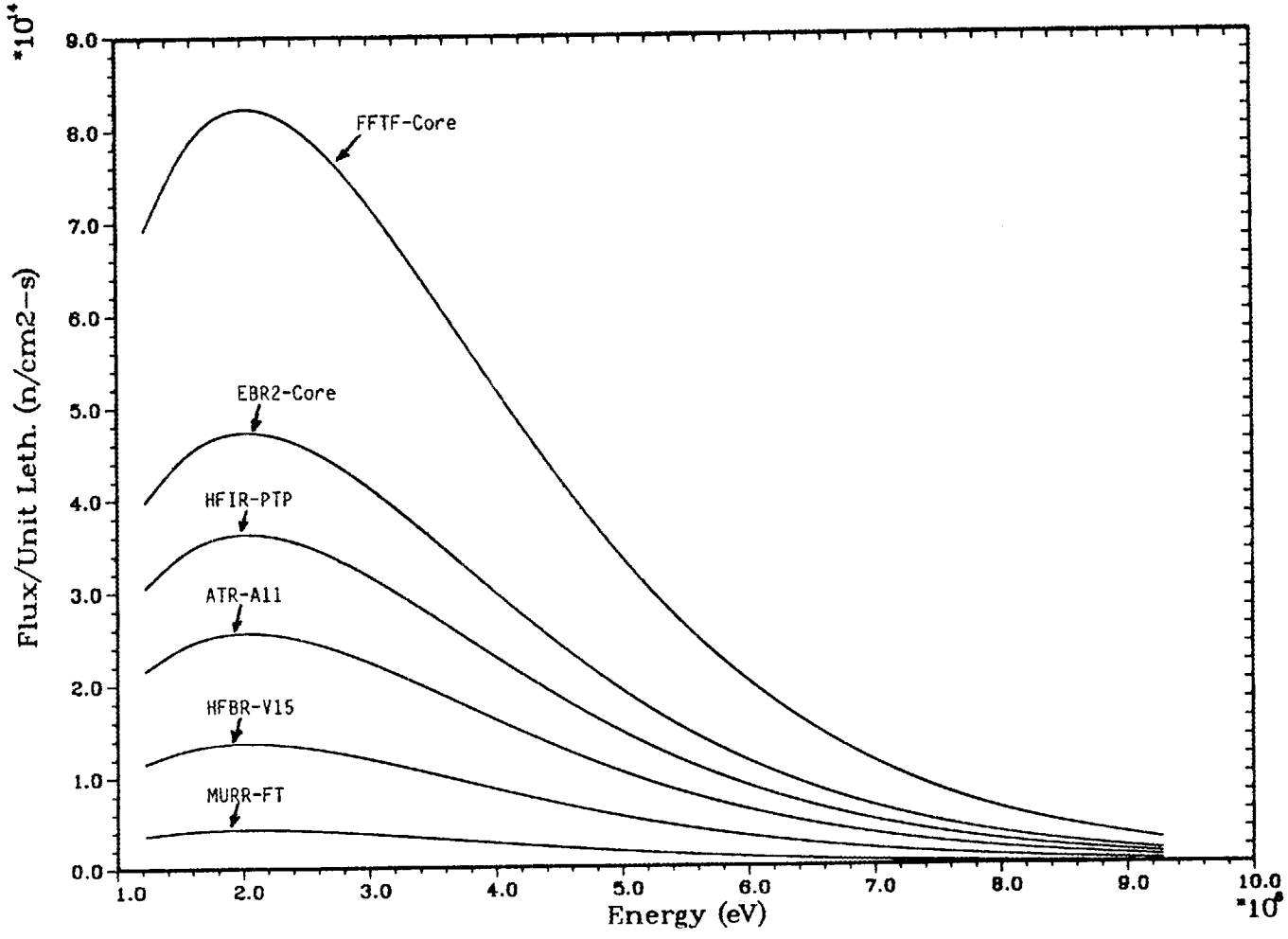

Figure 3.0.2. Fast neutron ($1 \geq E_n \geq 16$ MeV) spectrum in various Reactors/Irradiation Positions

3.1.0. ADVANCED TEST REACTOR – ATR[1]

3.1.1. General
3.1.2. Reactor Description
3.1.3. Irradiation and Experimental Facilities

3.1.1. General

The Idaho National Engineering Laboratory's Advanced Test Reactor (ATR) was designed to study the effects of intense radiation on samples of fuel and other reactor materials. The ATR is located at the Test Reactor Area (TRA) of the Idaho National Engineering Laboratory in addition to three low-power reactors, several hot cells, and other support facilities. The DOE operating contractor for the Test Reactor Area is EG&G Idaho, Incorporated. Sponsors of the tests are industrial firms and national laboratories carrying out atomic energy development contracts for DOE. A few tests not connected with DOE contracts are also accepted when space for them is unavailable in privately-owned test reactors.

The ATR is an evolution in test reactors which followed its predecessors, the Materials Testing Reactor (MTR) and the Engineering Test Reactor (ETR). The high power density in the ATR, aided by the efficient arrangement of fuel and loops, results in intense irradiation, which saves time in testing. Effects of radiation over years in a power reactor can be duplicated in months or weeks in the ATR.

3.1.2. Reactor Description

Details of the ATR reactor vessel and internal statistics are summarized in Table 3.1.1. When viewed from above, the ATR fuel region resembles a four-leaf clover (Figure 3.1.1).

The four loop positions within the four lobes of the clover are almost entirely surrounded by fuel, as is the loop position at the center. Four other loop positions between the lobes of the clover each have fuel on three sides. The curved arrangement means that the fuel approaches the loop pipes more closely on all sides than is possible in a rectangular grid design.

The ATR is unusual in having a solid stainless steel reactor vessel rather than carbon steel clad with stainless. The solid stainless steel vessel was chosen for its freedom from the possibility of brittle fracture after very long exposure to intense irradiation. The top head of the vessel is an elliptical dome bolted to the vessel through a 15-inch-thick flange which does not have to be removed during routine shutdowns for refueling. Instead, cover plates are removed from five elliptical ports in the top head, each about 2 by 3 1/2 feet. Operators reach down through the ports with long-handled tools to change fuel, samples, and core components.

An intermetallic compound of uranium and aluminum, UAlx, is currently used in the ATR fuel in place of U_3O_8. This material is also fabricated into plates by a powder metallurgy technique. Boron may be put in the fuel to serve as "burnable poison," since it absorbs some neutrons while the fuel is fresh but gradually "burns up"[4] and loses its ability to absorb neutrons as the fuel is consumed. The boron can, thus, help compensate for fuel burnup, while minimizing control drum movement necessary to maintain steady power.

The power level (or neutron flux) can be precisely controlled at the various loop positions to meet test requirements, and then held steady during the reactor operating cycle. Nominal ATR power distribution would be 50 megawatts in each of the five lobes, but power

---

[4]Boron-10, the boron isotope that strongly absorbs neutrons, is converted to boron-11, a weak absorber that quickly splits into lithium-7 and helium-4.

shifting allows a maximum lobe power of 60 megawatts, a minimum lobe power of approximately 17 megawatts, and other lobes at intermediate powers. Total power is 250 megawatts. Whereas older test reactors use vertically movable control rods which distort the vertical power distribution as they are slowly withdrawn to compensate for fuel burnup, the ATR uses a combination of control drums and "neck shim" rods to adjust power and hold distortion to a minimum. The control drums are 16 beryllium cylinders in the beryllium reflector surrounding the core. The cylinders have plates of hafnium (a neutron absorber) on 120 degrees of their outer surfaces. When power is raised, by rotating the hafnium away from the core, the effect is uniform along the vertical dimension of the core, and no vertical power distortion occurs.

Coolant water flows down through the channels between ATR fuel plates at the rate of 47.8 feet per second. Although the average coolant temperature after passing through the core is 167°F, certain channels in the "hot spots" of the core are at a considerably higher temperature. The fuel is designed for a surface temperature of about 330°F at beginning of core life. Higher temperatures would cause excessive production of an aluminum oxide film, resulting in an increase in fuel temperature and a corresponding decrease in the structural capabilities of the fuel plates. Water enters the vessel through two 24-inch lines at the bottom, flows up outside cylindrical tanks that support and contain the core, passes through concentric thermal shields, and enters the relatively open upper part of the vessel. From there the water flows down through the core to a flow distribution tank below the core, and leaves the vessel through four 18-inch lines. There are four primary coolant circulating pumps. Two or three pumps are operated, depending on the peak to core average power. The three pumps yield a flow rate of approximately 47,000 gallons per minute whereas two pumps yield approximately 43,000 gallons per minute.

The ATR control cylinders are located within the beryllium reflector that surrounds the core. Beryllium reflector is used to maintain the high neutron flux essential to a test reactor. The ATR beryllium reflector (51" high x 51" O.D.), consists of eight fitted segments that rest on flanges in the reflector support tank. Two vertical holes in each segment allow space for the control cylinders. The control cylinders are driven in pairs by eight horizontal drive shafts entering the reactor vessel through nozzles in the side. The drive motors are located in a service corridor accessible when the reactor is shutdown. The hafnium sections of the cylinders can be rotated toward or away from the core at the rate of 20 degrees per minute. The cylinders are used primarily to shift neutron flux, that is, to adjust power at the individual loop positions. Secondarily, they are used to compensate for fuel burnup. Programming of control drum and neck shim movements in the ATR is complicated by the interaction these control elements have on each other and their effect on the reactor. A computer dedicated to the ATR aids in planning the movements that maintain the desired power pattern. This computer can scan 512 analogue inputs from the reactor at the rate of 2500 bud per second and can calculate and report the power distribution with other information about conditions in the reactor.

The ATR has six tubular safety rods that slip down around the outside of six of the in-pile loop pipes for fast shutdown of the reactor. The safety rods are always cocked above the core before the reactor is taken to power. The action of driving the rods upward compresses a spring attached to each horizontal drive shaft, and the energy in the springs helps accelerate the rods when they are dropped. A "scram" signal from the reactor Plant Protective System disengages magnetic clutches between the drive motor gear boxes and the drive shafts, leaving the shafts free to spin. The springs act on the shafts at the same time the rods are accelerated downward by the forces of gravity and coolant flow. The rods drop

the first 12 inches into the core in 150 milliseconds with 3 primary coolant pumps operating and 170 milliseconds with 2 primary coolant pumps. The remaining 24 inches of fall are slowed by fluid action in snubber tubes in which the drive racks travel, thus preventing mechanical damage at the bottom of the drop.

3.1.3. Irradiation and Experimental Facilities

The major test spaces in the ATR are the nine loops. Eight are pressurized water loops through which water circulates at pressures up to 2200 pounds per square inch. The ninth loop is used for increased temperatures and pressure - to 680° F and 3400 pounds per square inch. Sample capsules are irradiated in vertical holes in the neck shim housing, center flux trap baffle, the beryllium reflector, and in racks that hang on the outside of the reflector. Dozens of holes of various diameters are available for capsules in and near the ATR core. Many holes are contained in two capsule irradiation tanks that hang on the outside of the core-reflector tank (see Figure 3.1.3).

A capsule experiment can be very simple and consists of a bundle of metallurgical specimens in an aluminum tube open to the flow of water in the reactor vessel. More commonly, capsules are sealed, especially if they consist of target materials for the production of fuel. Some capsules have "lead tubes" attached for carrying instrument wires outside the reactor vessel. A capsule may contain a number of postage-stamp-size fuel samples, each with thermocouples attached for monitoring temperature. A capsule experiment may also consist of radioisotopes to meet the needs of medicine, industry, and research.

Much heat is generated in fuel samples by fission and gamma-ray heating, so the temperature of samples is controlled by regulating heat leakage from the capsule. If the sample must run cool, the space between sample and capsule wall is filled with a good heat-

transfer medium, such as sodium-potassium liquid metal. If the sample must run hot, the space is filled with gas as insulator. The temperature of some capsules is controlled with a flowing mixture of helium and argon. The ratio of the two gases, which have different heat transfer rates, is regulated to maintain the desired temperature.

Capsule tests cost much less than loop tests but provide much less flexibility. A fuel development program commonly starts with testing of many samples in capsules, then proceeds to loop tests of the designs that performed best. Capsules may be any length up to 48 inches and the capsules with instrument leads are typically 2 or 3 feet long. Uninstrumented capsules are typically 6 inches long and are stacked in aluminum tubes, called baskets, for ease of handling.

Irradiation capsule diameters, peak neutron flux, and gamma heating values are given in Table 3.1.2. Typical capsule designs are shown in Figure 3.1.4.

Table 3.1.1. Details of the ATR Reactor Vessel and Internal Statistics

Outside dimensions	12 feet in diameter by 35-feet high.
Wall thickness	Minimum 2 inches, maximum 5 inches.
Material	Type 304 stainless steel (<0.06% carbon).
Coolant flow rate	47,000 gallons per minute (see discussion below).
Coolant pressure (pounds per square inch gauge)	Operating: 355 inlet, 255 outlet, design: 390
Coolant temperature	Operating: 125°F inlet, 167°F average outlet, Design: 240°F.
Core location	Top of core is 18-feet below top of vessel.

Table 3.1.2. Approximate Peak Flux Values for Various ATR Capsule Positions at Maximum Allowable Power (250 MW)

Position	Diameter (in)	Thermal Flux (2200 m/s)	Fast Flux (1 MeV)	Gamma Heating (W/g°C)
A-Holes, (A1 - A8)	0.625	4.28×10^{14}	3.83×10^{14}	19.0
(A9 - A12)	0.625	4.64×10^{14}	5.25×10^{14}	20.0
B-Holes, (B1 - B8)	0.875	5.75×10^{14}	1.85×10^{14}	14.5
H-Holes, (H1 - H16)	0.625	4.28×10^{14}	3.83×10^{14}	19.0
I-Holes,				
Large (I1, I6, I11, I16)	5.000	3.89×10^{13}	3.05×10^{12}	1.5
Small (I2 - I5, I7 - I10, I12 - I15, I17 - I20)	3.250	7.71×10^{13}	3.01×10^{12}	1.5
Outer Holes,				
ON-04	-	9.85×10^{12}	2.82×10^{11}	0.34
ON-05	-	8.74×10^{12}	2.50×10^{11}	0.40
ON-09	-	3.83×10^{12}	0.88×10^{11}	0.1
OS-05	-	7.86×10^{12}	2.33×10^{11}	0.32
OS-07	-	7.30×10^{12}	2.52×10^{11}	0.26
OS-10	-	2.98×10^{12}	0.77×10^{11}	0.12
OS-15	-	1.24×10^{12}	0.27×10^{11}	0.045
OS-20	-	0.56×10^{12}	0.08×10^{11}	0.024

*Can be either 0.825 or 3.030.

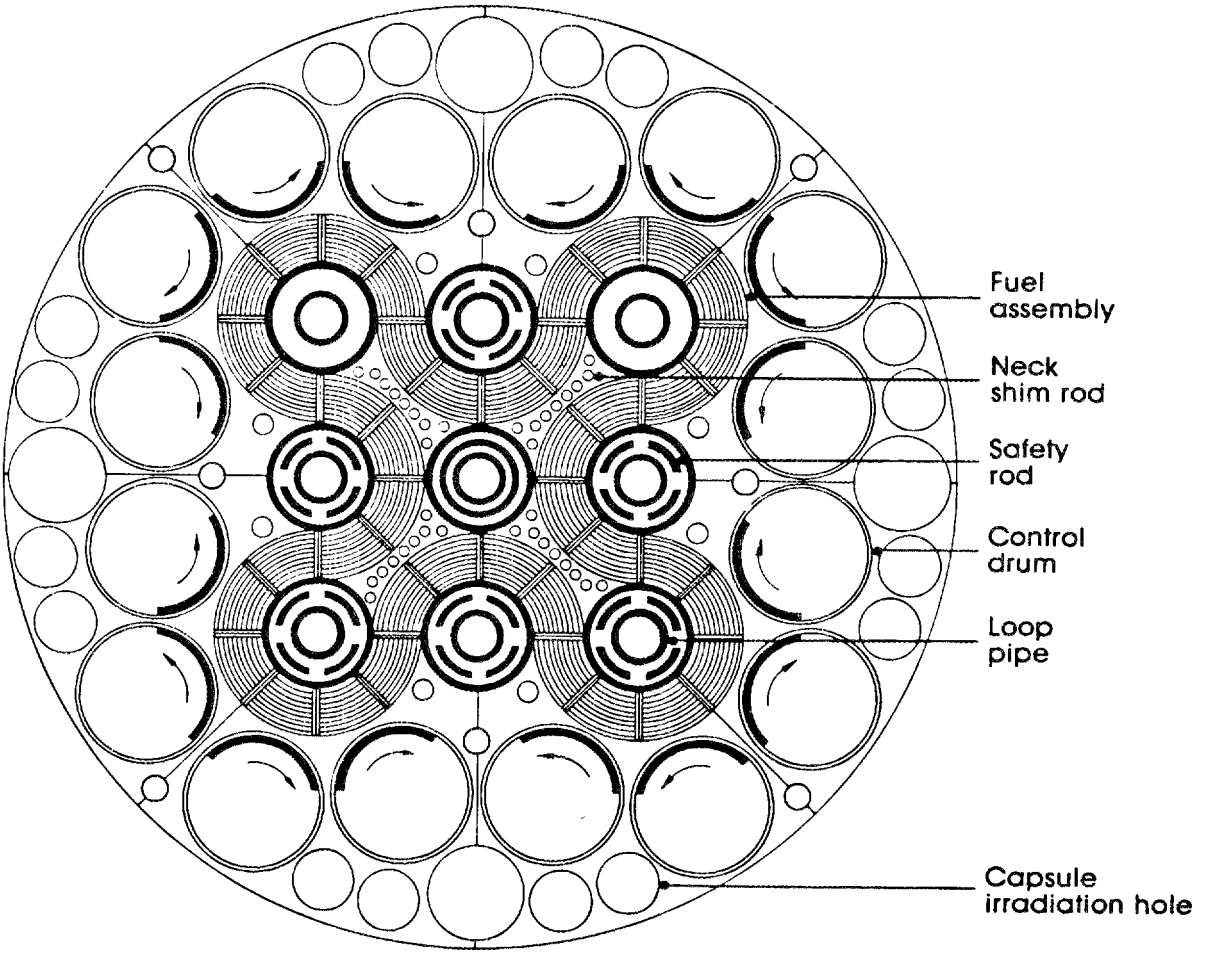

Figure 3.1.1. Horizontal Cross-section of ATR

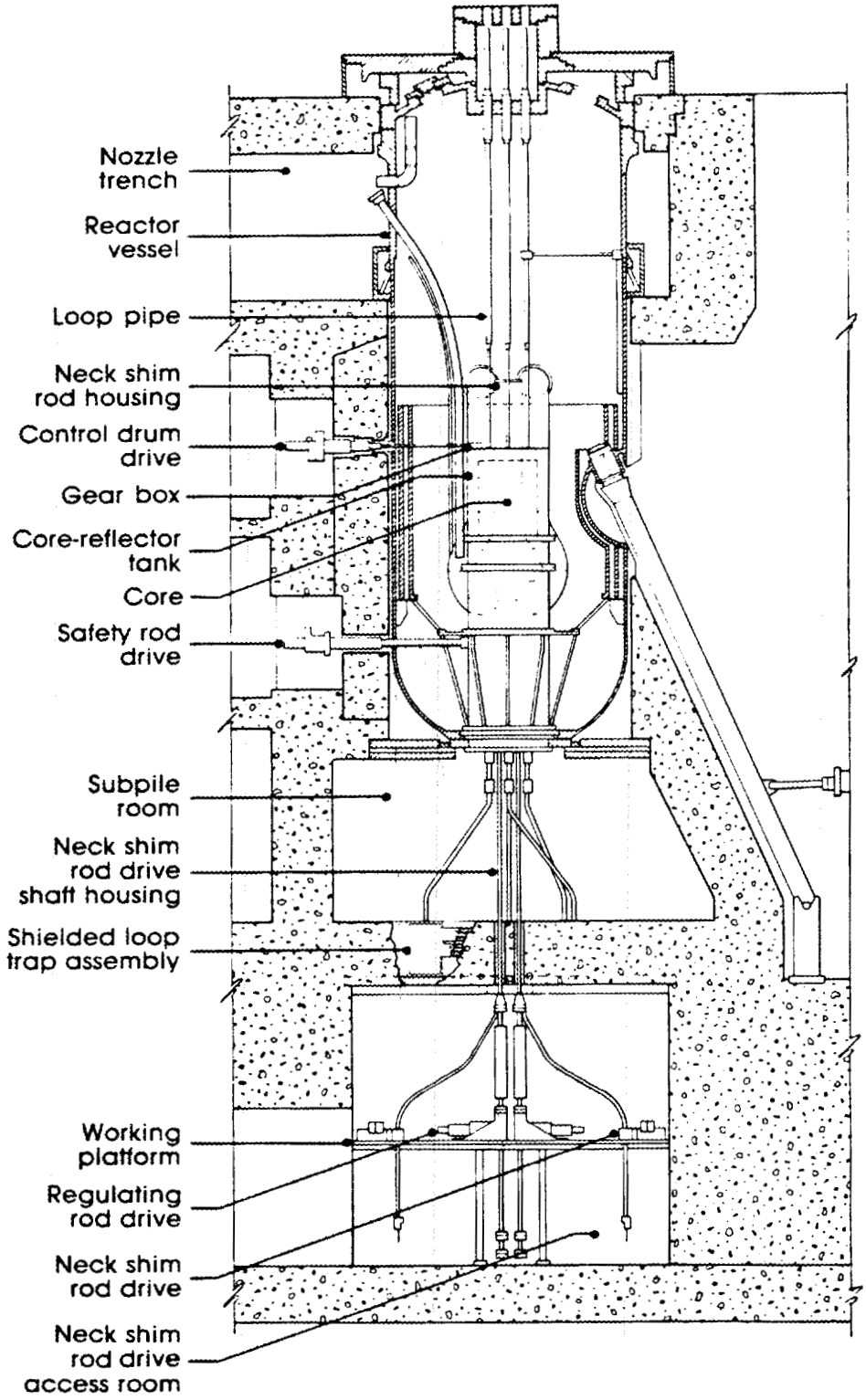

Figure 3.1.2. Vertical cross-section of the ATR vessel, showing the control drives and part of the sheilding

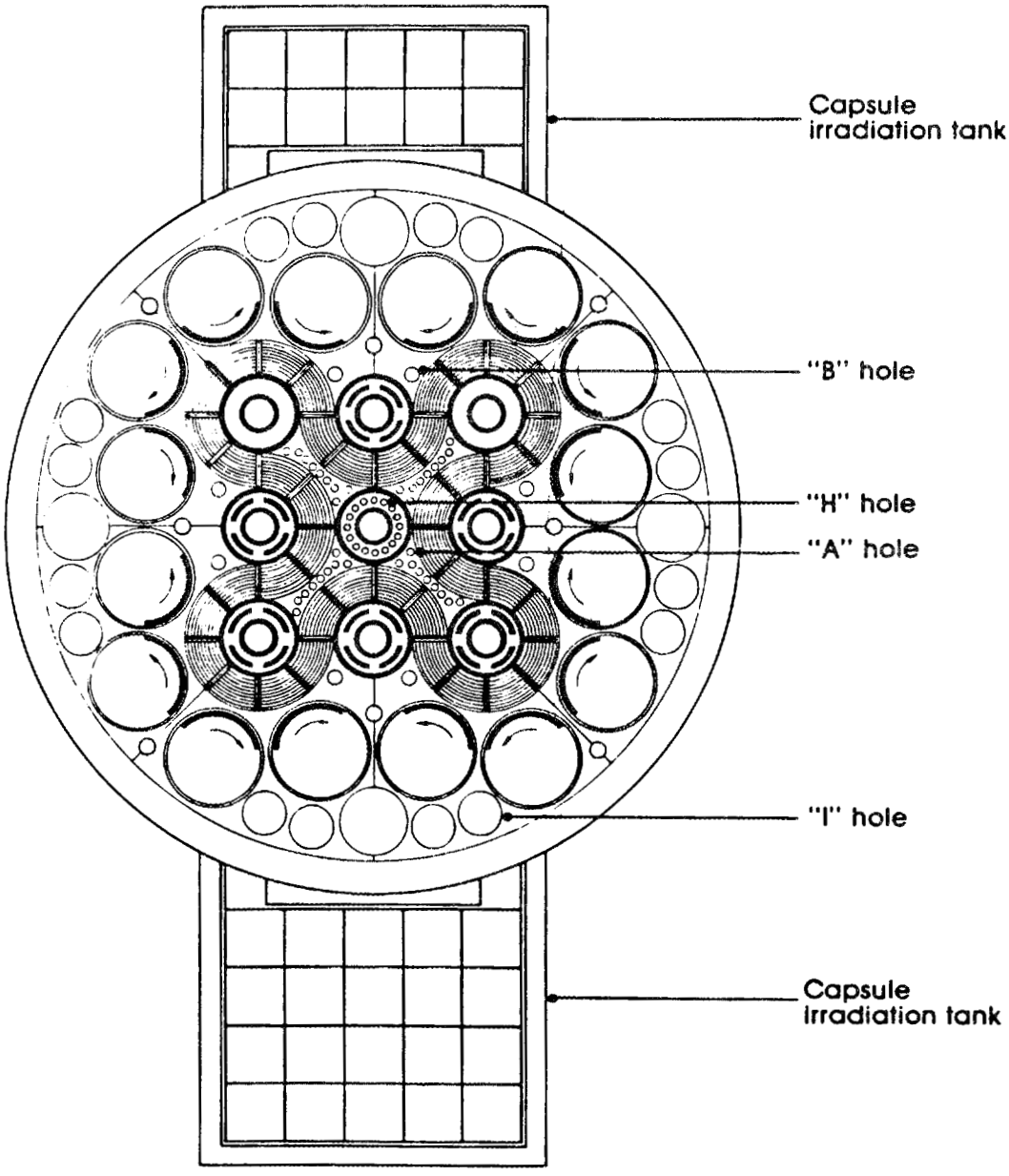

Figure 3.1.3. Irradiation positions in the ATR

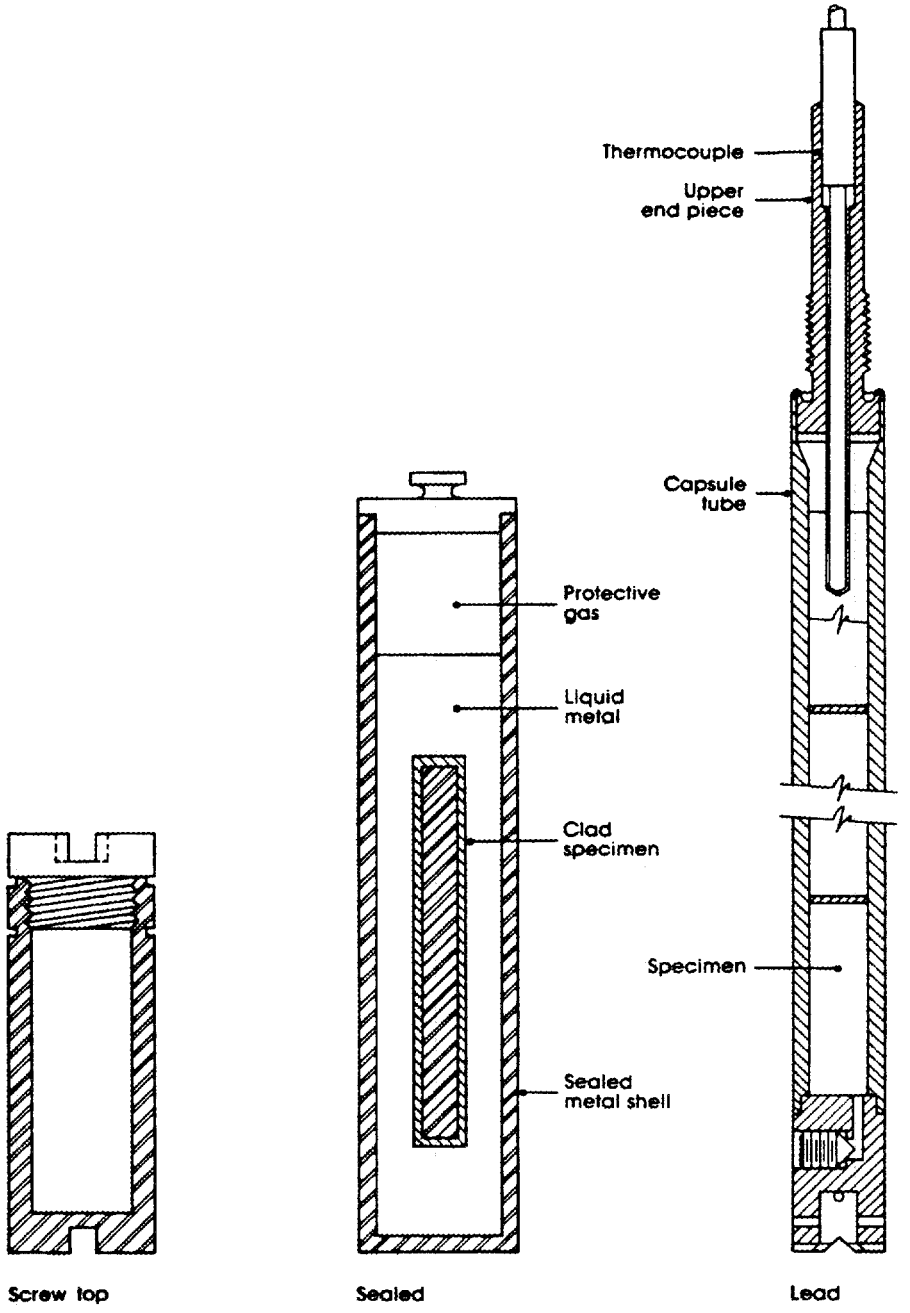

Figure 3.1.4. Typical ATR irradiation capsules

3.2.0. FAST FLUX TEST FACILITY--FFTF

3.2.1. General
3.2.2. Reactor Description
3.2.3. Irradiation and Experimental Facilities
3.2.3.1. Core Arrangement
3.2.3.2. Materials Open Test Assemblies (MOTA)
3.2.4. Operating Schedule
3.2.5. Supporting Services and Facilities
3.2.6. Administrative and Service Contacts

3.2.1. General

The Fast Flux Test Facility (FFTF) is a 400-MW, sodium-cooled, low-pressure, high-temperature, fast neutron flux reactor. This reactor was designed and constructed for irradiation testing of breeder reactor fuels and materials. The FFTF reactor core generates up to 7×10^{15} $n.s^{-1}.cm^{-2}$ of neutron flux ($\sim$65% >0.1 MeV) at a power level of 400 MW. The reactor provides extensive capability for in-core irradiation testing, including eight core positions that may be used with independent instrumentation for the test specimens. Four of these positions may be used for independently cooled test loops. In addition to irradiation testing capabilities, the FFTF provides long-term testing and evaluation of plant components and systems for Liquid Metal Fast Breeder Reactors.

The term FFTF includes the reactor itself, as well as equipment and structures for heat removal, containment, core component handling and examination, instrumentation and control, and for supplying utilities and other essential services. The FFTF is a complex array of buildings and equipment arranged around a reactor containment building. The reactor is located in a shielded cell in the center of the containment. Heat is removed from the reactor by liquid sodium circulated through three primary loops (including primary pumps, piping and intermediate heat exchangers) also located in cells in containment. Figure 3.2.1 shows the

reactor location within containment, and Figure 3.2.2 is a cutaway of the containment building showing the locations of primary pumps and intermediate heat exchangers. Secondary sodium loops transport the reactor heat from the intermediate heat exchangers to the air-cooled tubes of the dump heat exchangers. Heat from the closed loops will be removed by similar but much smaller heat transport systems when they are activated.

3.2.2. Reactor Description

The reactor is located in a shielded cell filled with nitrogen. A cutaway of the reactor is shown in Figure 3.2.3. This complex array consists of the following major components:

- Reactor vessel, reactor guard vessel and reactor head
- Reactor core
- Above-core in-vessel components
- Ex-vessel neutron flux monitors and surveillance equipment

The reactor vessel is constructed of type 304 stainless steel and is approximately 43 feet high with an inside diameter of 20 feet. The wall thickness varies from 2 3/8 in to 2 3/4 in. A pool of liquid sodium fills the reactor vessel from the bottom to the argon cover gas zone near the top. Sodium coolant enters the reactor vessel through three 16-in. nozzles in the lower part of the vessel, flows through the core and other equipment, and then flows out through three 28-in outlet nozzles located approximately at vessel mid-height. The reactor vessel is suspended from its upper section and nested in a bottom-mounted type 304 stainless steel reactor guard vessel whose purpose is to assure that the reactor vessel nozzles remain submerged in sodium in the event of a leak. The reactor head is the closure for the reactor vessel and is 25 ft in diameter, about 22 in thick and weighs 214 tons. Equipment mounted on the head includes drive mechanisms for in-vessel components, seats and shielding for

openings providing access to the vessel interior, and coolant piping for independently cooled test loops.

3.2.3. Irradiation and Experimental Facilities

The core of FFTF consists of 199 core assemblies. The design includes 74 positions for PuO_2-UO_2 driver fuel assemblies, which generate the nuclear flux, nine boron carbide control rod absorber assemblies, and eight positions that may be used for independently instrumented tests of fuel specimens or reactor core materials. All eight independently instrumented positions may be used for open tests cooled by the reactor primary coolant system. In addition to the testing capabilities of the open test assemblies, the 74 positions designed for driver fuel may be used for testing of fuels. These positions are cooled by the main reactor coolant. For each of these positions, coolant outlet flow and temperature are measured by instrumentation suspended above the position.

Nonfissioning materials may be tested in the fueled portion of the core and also in some of the 108 core positions surrounding the fueled zone. The neutron flux in these peripheral positions varies from 0.5×10^{15} to 4×10^{15} $n.s^{-1}.cm^{-2}$. (Nominally, these 108 positions contain Inconel reflectors).

The core periphery positions may also include a variable number (up to 15) absorber assemblies, which remain fixed in the core periphery for reactivity adjustment during a particular fuel cycle. The other peripheral positions are occupied by Inconel reflectors, which are surrounded by radial shielding contained in a core barrel. The core barrel supports six core restraint mechanisms, which hold the core assemblies in proper orientation during nuclear operation. The core barrel is supported by a core support structure, which is welded to the reactor vessel.

3.2.3.1. Core Arrangement

Since FFTF is an irradiation test reactor, the composition and arrangement of the core are subject to change to meet varying testing requirements. A typical core arrangement is shown in Table 3.2.1 and Figure 3.2.4. The core is arranged in the form of concentric hexagonal rings of assemblies surrounding a central assembly, and the central assembly is known as "Row 1." The first ring surrounding the central assembly is known as "Row 2," and so on for a total of nine rows. The first four rows are known as the "inner enrichment zone," and Rows 5 and 6 are known as the "outer enrichment zone." These first six rows constitute the fueled (active) zone of the core, which is 3 ft in axial length and 47.2 in. in equivalent diameter. The first six rows contain the driver fuel assemblies, nine control rod assemblies, and up to eight independently instrumented test assemblies. The active zone of the core is surrounded by three rows (Rows 7, 8, and 9) of assemblies (108 total) consisting of reflectors and fixed shim absorber assemblies. Rows 7, 8, and 9 are surrounded by segmented radial shielding.

3.2.3.2. Materials Open Test Assemblies (MOTA)

The highly instrumented Materials Open Test Assembly (MOTA) (Figure 3.2.5) is designed to eliminate many problems associated with evaluating the irradiation behavior of structural materials. The MOTA provides detailed temperature control and measurement during irradiation as well as density and dimensional measurements on test specimens during reactor shutdown. The MOTA contains 48 specimen canisters, 30 of which have independent temperature control. In its current configuration, the MOTA contains up to 2500 cm^3 of specimen space for in-core irradiation. Eighty-two leads for pressure, temperature and electrical connections may be used.

Table 3.2.1. Typical Core Arrangement of the FFTF

Type of Assembly	Row 1	2	3	4	5	6	7	8	9	Total
Driver Fuel	1	4	9	15	18	27	-	-	-	74
Primary Control Rod	-	-	3	-	-	-	-	-	-	3
Secondary Control Rod	-	-	-	-	6	-	-	-	-	6
Potential Control Rod	-	-	-	-	-	-	9	-	-	9
Fixed Shim Absorber	-	-	-	-	-	-	6	-	-	6
Reflector	-	-	-	-	-	-	21	42	30	93
Open Test	-	2	-	3	-	3	-	-	-	8
Total	1	6	12	18	24	30	36	42	30	199

The MOTA is limited to nonfissioning materials. The MOTA test section is a standard FFTF duct with a "stalk," or upper assembly, mechanically attached to the duct assembly. This arrangement permits the direct removal of the entire assembly from the reactor. The MOTA is designed so that the experiment can be removed from the core at the end of an operating cycle, the test specimens can be examined and the experiment can be reinserted into the core for the start of the next cycle. This rapid turnaround capability further enhances the value of the large irradiation test volume. (Note: The fuels open test assembly provided similar capabilities).

3.2.4. Operation Schedule

As of summer of 1992 FFTF has been placed on a stand-by status.

3.2.5. Supporting Services and Facilities

The FFTF includes facilities for receiving, conditioning, storing, installing in and removing from the core all routinely removable core components and test assemblies, and for storing irradiated fuel. Limited examination and packaging capabilities (for offsite shipment) are also provided. Instrumentation and control equipment provides monitoring and automatic control of the reactor and heat removal facilities, automatic reactor shutdown (scram) if pre-set limits are exceeded, and computerized collection, handling, retrieval and processing of operating and test data. Utilities and services include onsite emergency generation of electrical power (which drives critical equipment to cool the reactor during shutdown conditions and to operate critical control systems), heating and ventilation, radiation

monitoring, fire protection, auxiliary cooling systems for cell atmospheres and other basic components.

3.2.6. Administrative and Service Contacts

For additional information contact

Dr. Robert E. Schenter
Westinghouse Handford Company
MSIN: HO-36
P. O. Box 1970
Richland, WA 99352

(509) 376-3935

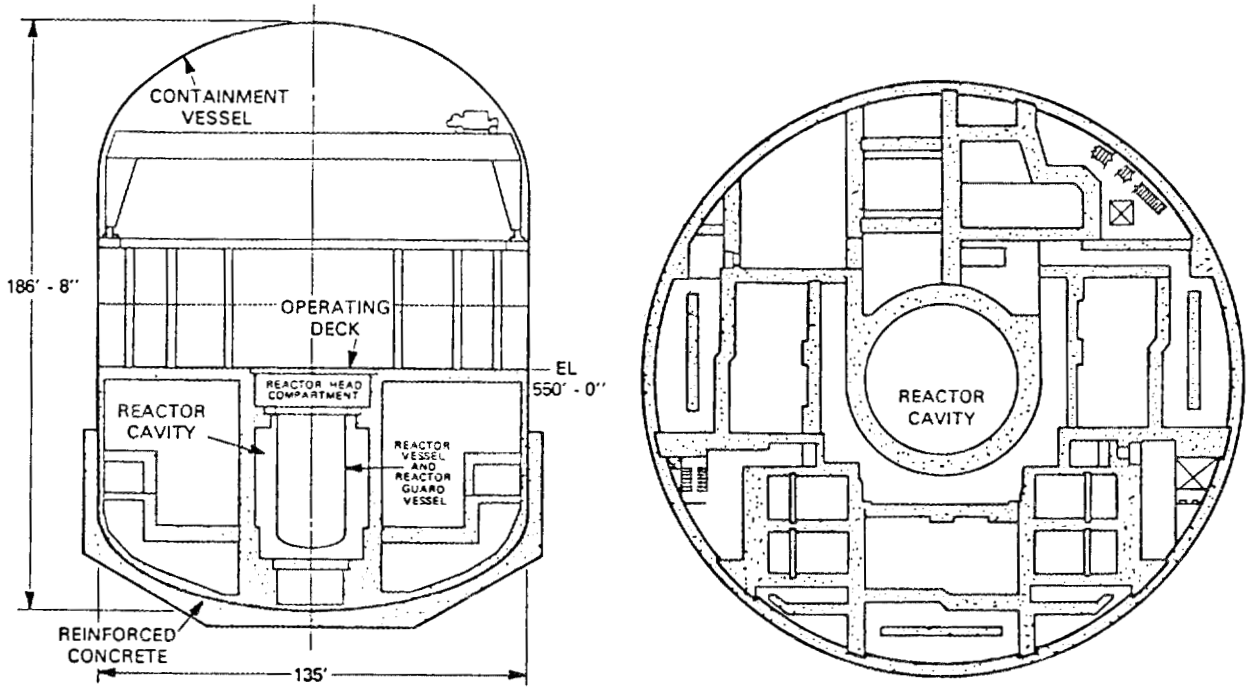

Figure 3.2.1. Reactor location within the FFTF containment

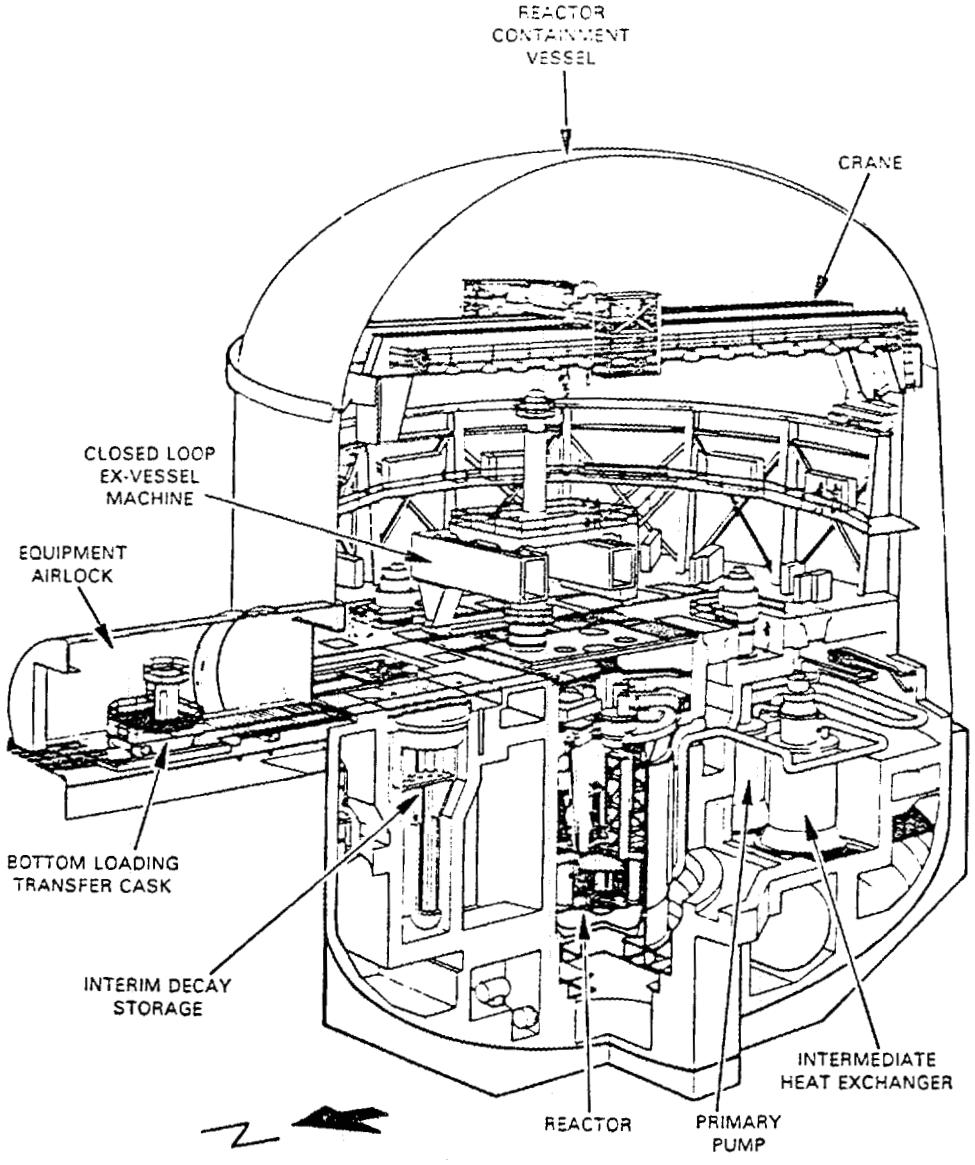

Figure 3.2.2. Cutaway view of the FFTF containment building

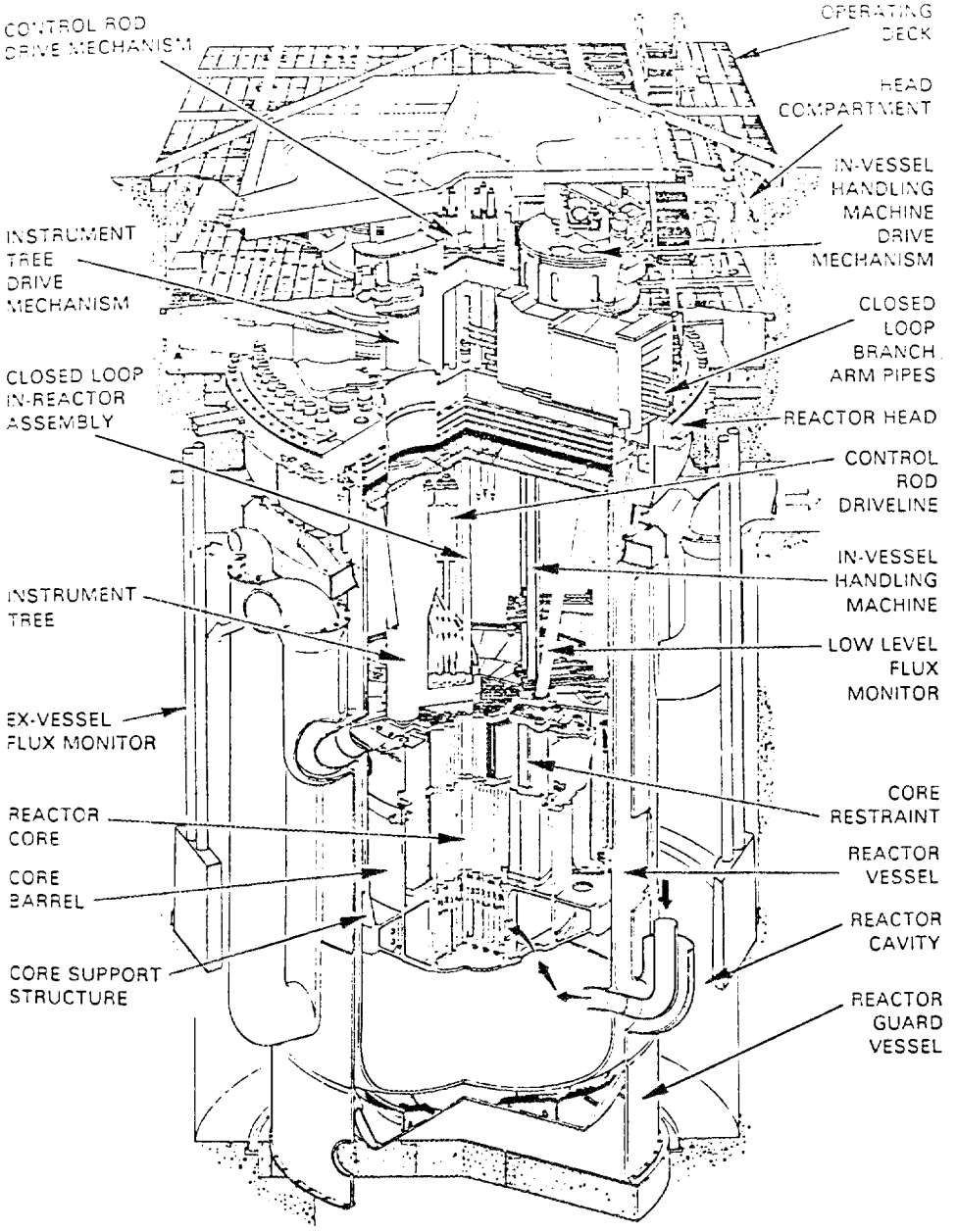

Figure 3.2.3. Cutaway view of the FFTF reactor

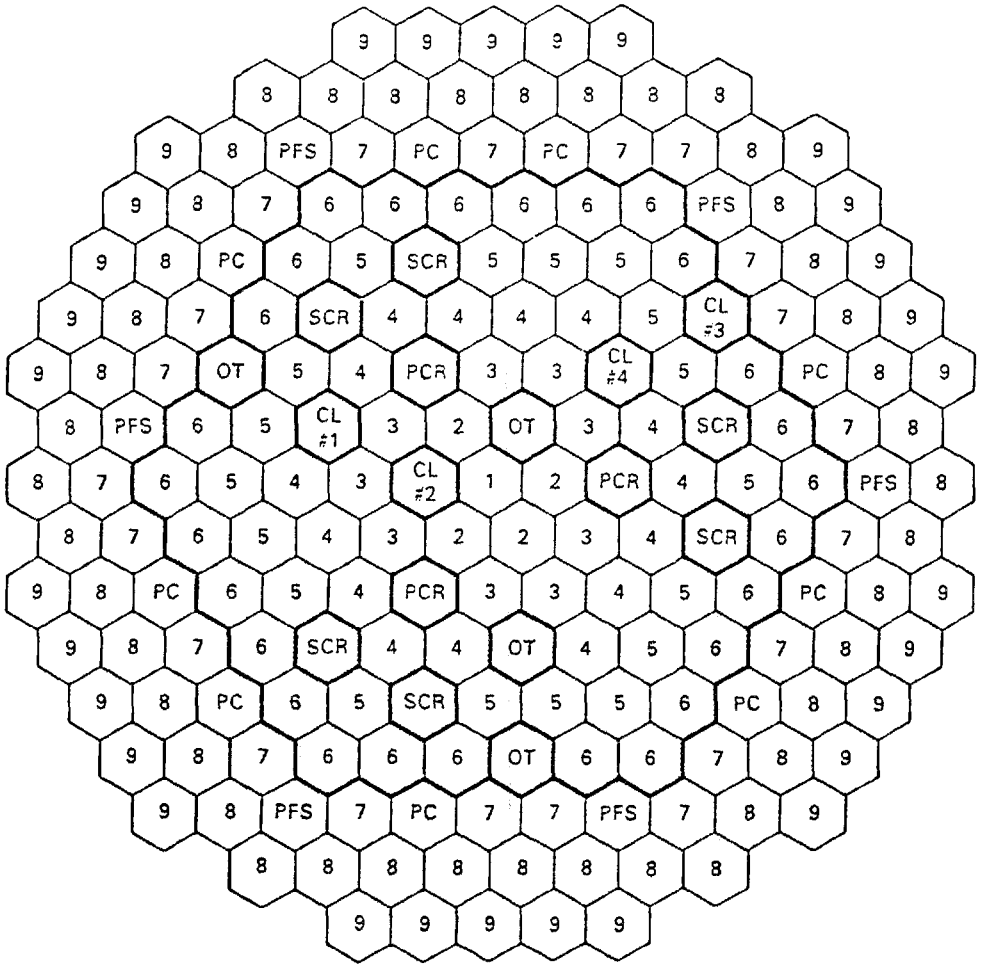

1-9: ROW NUMBER FOR CORE ASSEMBLY. ROWS 1-6 ARE THE FUELED ZONE; ROWS 7-9 ARE THE REFLECTOR ZONE.

CL - CLOSED LOOP POSITION.

SCR - SECONDARY CONTROL ROD ABSORBER POSITION. SIX ASSEMBLIES WERE INSTALLED INITIALLY.

OT - OPEN TEST ASSEMBLY POSITION.

PC - POSITIONS IN WHICH CONTROL RODS MAY BE INSTALLED.

PFS - PERIPHERAL FIXED SHIM ABSORBERS.

PCR - PRIMARY CONTROL RODS. THREE RODS WERE INSTALLED INITIALLY.

Figure 3.2.4. A typical arrangement of the FFTF core map

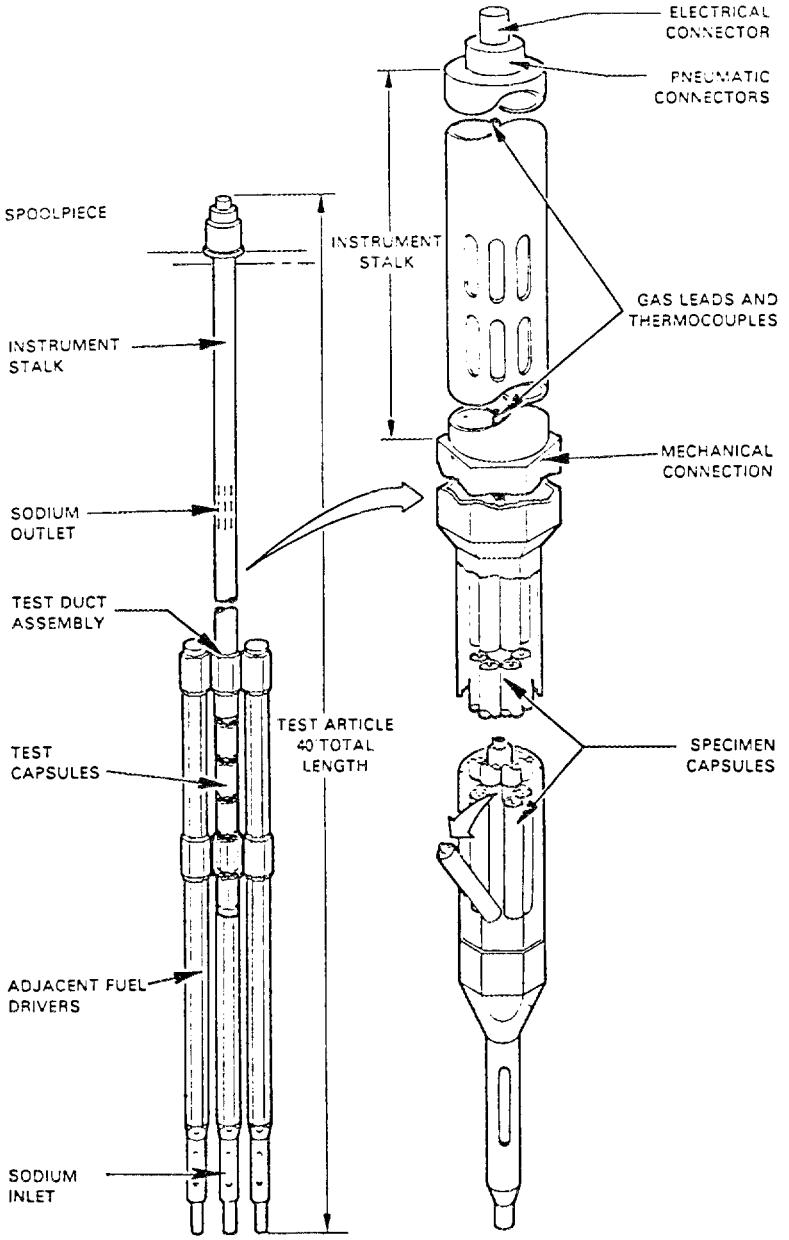

Figure 3.2.5. Materials Open Test Assembly (MTOA) of the FFTF

3.3.0 GEORGIA TECH RESEARCH REACTOR--GTRR

3.3.1. General
3.3.2. Reactor Description
3.3.3. Irradiation and Experimental Facilities
3.3.4. Operating Schedule
3.3.5. Supporting Services and Facilities
3.3.5.1. Hot Cell Laboratory
3.3.6. Administrative and Service Contacts

3.3.1. General

The Georgia Tech Research Reactor (GTRR) and the Hot Cell Laboratory constitute the two major facilities of the Neely Nuclear Research Center of the Georgia Institute of Technology.

The GTRR is a heterogeneous, heavy-water moderated and cooled reactor, fueled with plates of aluminum-uranium alloy. It is designed to produce a thermal neutron flux of greater than 10^{14} $n.s^{-1}.cm^{-2}$ at a power of 5 MW and an exit moderator temperature of 137° F.

3.3.2. Reactor Description

A cutaway perspective view of the GTRR is shown in Figure 3.3.1 and cross sectional view of the reactor showing the vertical and horizontal beam ports is shown in Figure 3.3.2. The reactor core is approximately two feet in diameter, two feet high, and when fully loaded, contains provisions for up to nineteen fuel assemblies spaced six inches apart in a triangular array. Each assembly contains sixteen fuel plates. The total ^{235}U content of a full loading is about 3.2 kg. The fuel is centrally located in a six foot diameter aluminum reactor vessel which provides a two foot thick D_2O reflector completely surrounding the core.

3.3.3. Irradiation and Experimental Facilities

The reactor is equipped with numerous horizontal and vertical experimental facilities to be used for the extraction of beams of fast and slow neutrons and for the performance of irradiations within the facilities. Measured neutron fluxes in some of these facilities are given in Table 3.3.1 and Figure 3.3.3. A thermal column, 5 feet square, is provided as an extension of the graphite reflector. It is fitted with a shutter and with heavy shielding located at the outer face. The shutter opens horizontally giving a port 4 inches by 4 inches or 16 inches by 16 inches. A number of removable graphite stringers which extend up to the reactor tank wall are provided.

A shielded room for biomedical research is located in the side of the reactor opposite the thermal column. This facility is designed to allow accurate exposures of biological specimens to a wide-angle beam of thermal neutrons with a relatively low background of fast neutrons and gamma rays. The facility is fitted with a bismuth gamma shield, water tanks for neutron attenuation, a collimator, shutter, and provisions for a converter plate system. The opening in the reactor is surrounded by the shielded room. The use of a converter plate will permit the fast flux to be increased to about 10^{10}n.cm^{-2}.s^{-1} with a corresponding decrease in thermal flux and increase in gamma rays.

There are two rabbit systems for hydraulically sending and retrieving samples from the GTRR.

3.3.4. Operating Schedule.

The GTRR is operated on an as needed basis. Generally the reactor is operated 5-7 hours every day of the week. Extended, around-the-clock operation is possible for short periods with the present crew of operators.

3.3.5. Supporting Services and Facilities

Technical support is available to provide nuclear, electrical, and/or mechanical support.

3.3.5.1. Hot Cell Laboratory

The design of the Hot Cell Laboratory is unique and very appropriate for qualification testing and major features include the following:

- Quality assurance program that meets the highest standards; ionization chambers calibration traceable to the NIST.
- 700,000 Ci Co-60 sources.
- Master-slave manipulators for remote handling.
- Wall penetrations to allow electrical and/or mechanical monitoring for irradiated objects.
- 15-ton crane for handling heavy objects.
- Large hot cell to accommodate large objects: 7 feet wide x 13 feet high and 23 feet long.
- Water, air, and gas supplies are available.
- Electrical power with the following line voltages:

  120 V, 60 Hz, 10 15 amps, 220 V, 60 Hz, 10 20 amps, 440 V, 60 Hz, 30 60 amps
- A 3-ton crane inside hot cell with remote operation capability.
- The cell has adequate shielding for dose rates up to 1 x 10^7 rads/hour air.
- A vertical pipe irradiation facility located in the Cobalt storage pool for irradiation of small components (3" x 3" x 12" or cylindrical 6" diameter x 12").

Table 3.3.1. Thermal Neutron Flux in the GTRR

Facilities			Thermal Neutron Flux ($n.s.^{-1}cm^{-2}$)	
Symbol	Description	Dimension	Measured at 1 Mw	Projected at 5 Mw
H-1	Horizontal beam tube	6" ID	$2.4x10^{13}$	$1.2x10^{14}$
H-2 to H-9	Horizontal beam tube	4" ID	$1.5\text{-}2.4x10^{13}$	$0.75\text{-}1.2x10^{14}$
H-10	Horizontal beam tube	2"x6"	$2.2x10^{13}$	$1.1x10^{14}$
H-11, H-12	Horizontal thru-tube	6" ID	$2.0x10^{13}$	$1.0x10^{14}$
H-13, H-14	Horizontal thru-tunnel	12"x12"	$5x10^{12}$*	$2.5x10^{13}$
H-15, H-16	Pneumatic tube	1 1/2" ID	$1.3x10^{13}$	$6.5x10^{13}$
V-1 to V-19	Fuel element positions	3"x3"	$3x10^{13}$*	$1.5x10^{14}$
V-20 to V-23	Vertical thimble (core)	2 5/8" ID	$2.3x10^{13}$	$1.1x10^{14}$
V-24, V-25	Vertical thimble (reflector)	3 1/2" ID	$4x10^{12}$*	$2x10^{13}$
V-27, V-28	Fast flux facility	4" ID**	$3x10^{12}$*	$1.5x10^{13}$
V-33 to V-42	Vertical thimble (reflector)	4" ID	$8.4x10^{11}$	$4.2x10^{12}$
V-43 to V-46	Vertical thimble (reflector)	6" ID	$8.1x10^{11}$	$4.5x10^{12}$
	Bio-Medical Facility (port) (room)	4" ID (at port face) 10'x12'(out 3")	$1.0x10^{10}$ $4x10^{9}$	$5.0x10^{10}$ $2.0x10^{10}$
	Thermal column	5'x5'	$1.7x10^{12}$	$8.5x10^{12}$

*Calculated value, **Without U-235 converter

3.3.6. Administrative and Service Contacts

For additional information, contact

Dr. R. A. Karam, Director
Neely Nuclear Research Center
Georgia Institute of Technology
900 Atlantic Drive
Atlanta, GA 30332-0425

(404) 894-3620.

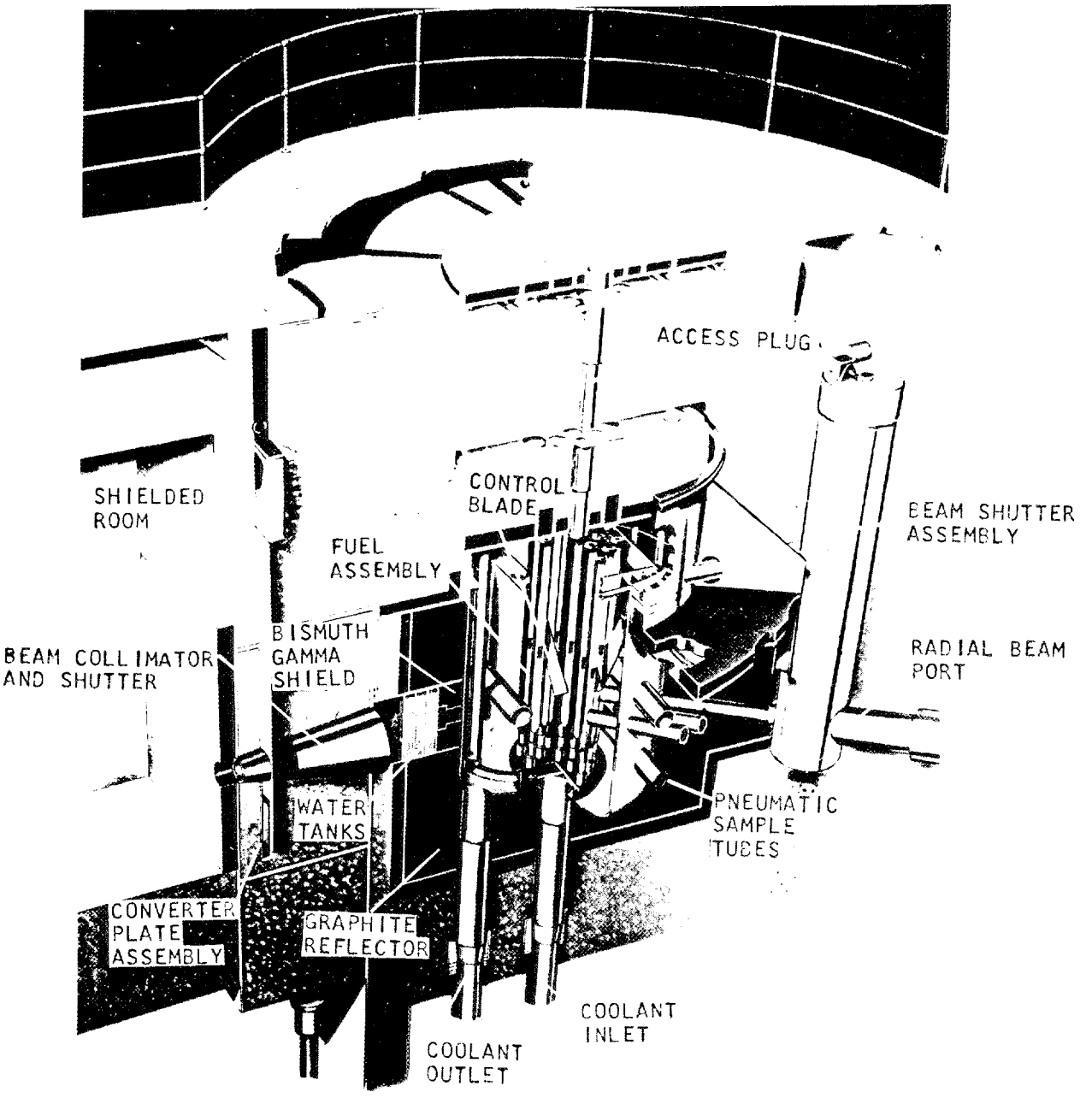

Figure 3.3.1. Cutaway perspective view of the GTRR

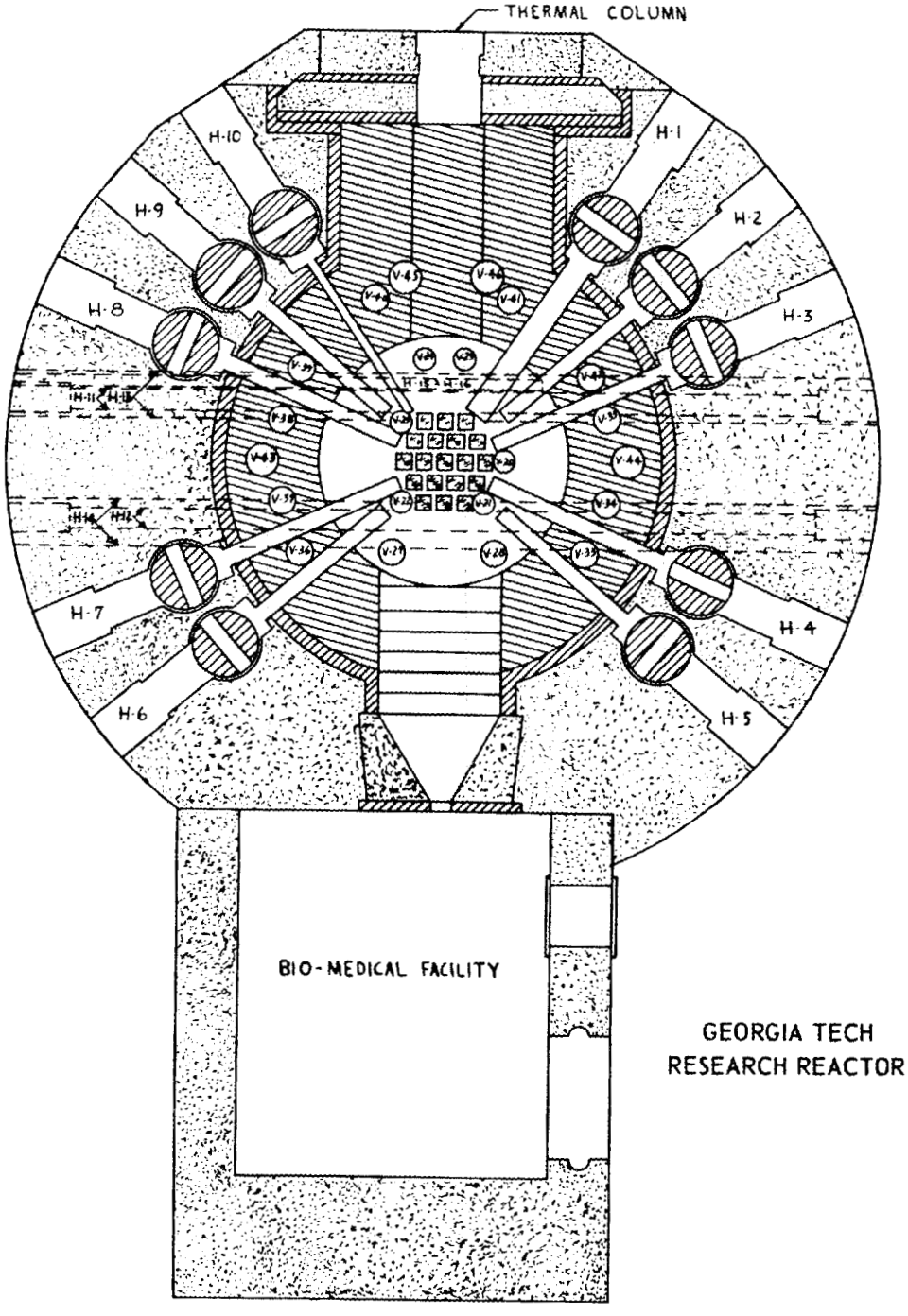

Figure 3.3.2. Horizontal cross-section of GTRR at the core midplane

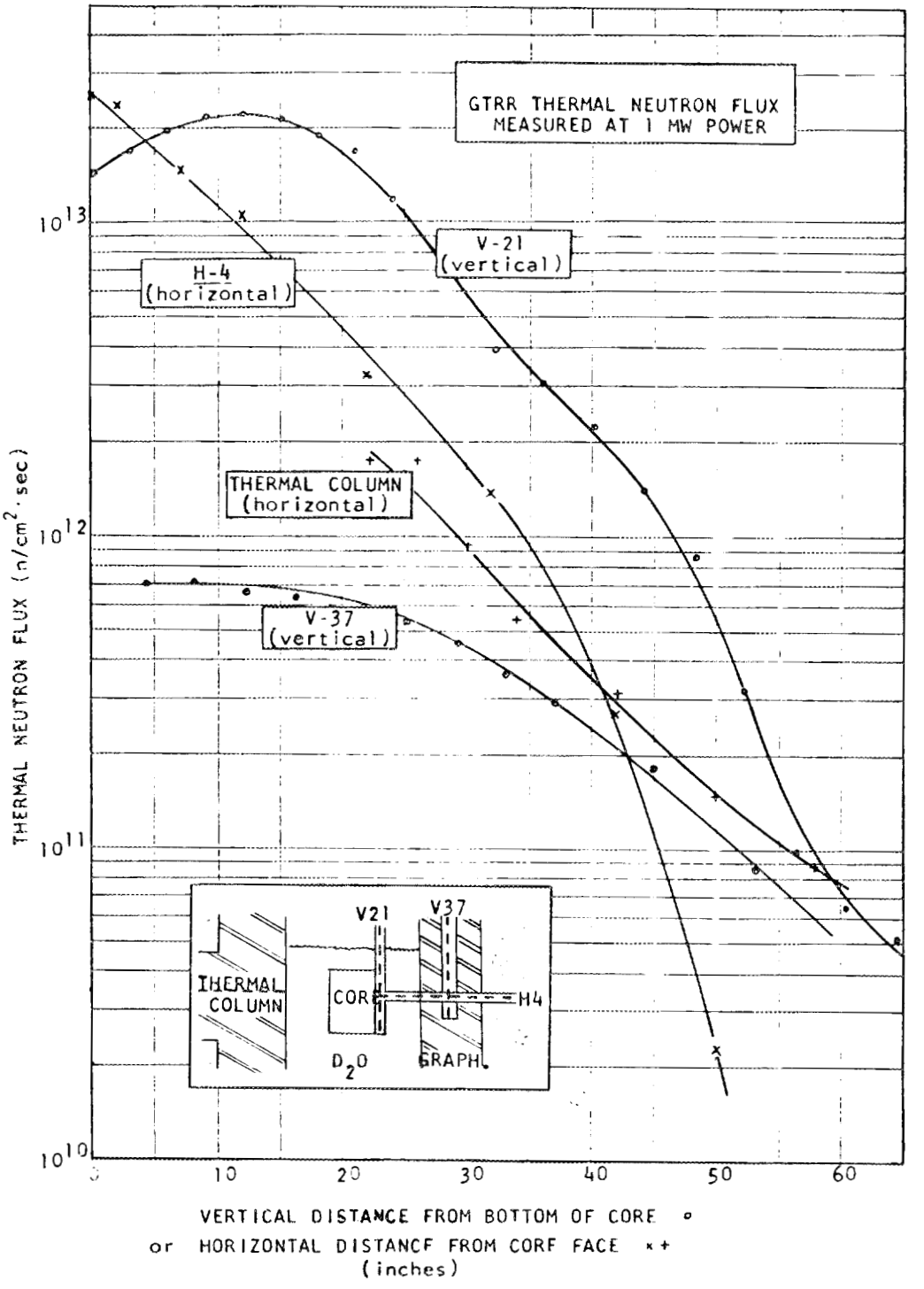

Figure 3.3.3. GTRR neutron flux at 1 MW power

3.4.0 HIGH FLUX BEAM REACTOR – HFBR

3.4.1. General
3.4.2. Description of Reactor
3.4.3. Irradiation and Experimental Facilities
3.4.3.1. Safety Requirements for Experiments
3.4.4. Operating Schedule
3.4.5. Supporting Services and Facilities
3.4.6. Administrative and Service Contacts

3.4.1. General

The Brookhaven High Flux Beam Reactor (HFBR) was designed to provide a total flux of 1.6×10^{15} $n.s^{-1}.cm^{-2}$ at a power of 40 megawatts. The HFBR first achieved criticality on October 31, 1965, approximately four years after construction began, and became available for general experimental use at full power several months later. The initial construction cost of the HFBR was $12.5 million, and its current annual operating cost is approximately $25 million (including associated overhead cost distributions). In 1982 the power level at the HFBR was increased to 60 megawatts, in order to enhance its research capabilities. However, in March 1989 the HFBR was not restarted after a scheduled shut down, when it was concluded that the Safety Analysis Report failed to assess the operator exposure consequences of a postulated beam tube rupture accident. After safety analyses, reactor modifications, training, and other safety improvements were completed, HFBR resumed operation in May 1991. The reactor will be operated at a nominal power level of 30 MW (35.4 MW limit). An out of core test program using a thermal hydraulics test loop is planned to support future operation above the preset 35.4 MW power limit.

In contrast to most reactors, which are designed to minimize the escape of neutrons from the core, the HFBR has been expressly designed to maximize the number of neutrons

available in external beams. This is accomplished through the choice of coolant material and core configuration. Heavy water, rather than light water, has been selected as the coolant and moderator in this reactor. The volume of D_2O flowing through the core to cool the fuel elements does not provide sufficient moderation to thermalize all the neutrons within the core. A large number of fast and epithermal neutrons thus escape from the region of the fuel and are subsequently moderated in the large volume of D_2O reflector surrounding the core. The resulting thermal neutrons are reflected back into the core where they help to sustain the nuclear chain reaction. This choice of materials and configuration results in a unique neutron distribution in which the useful thermal neutron population peaks in the reflector, where the neutrons are directly accessible to the beam tubes (Figure 3.4.1). The higher energy neutrons, which are normally not desirable in the beams, are greatest in population within the core. Power density is peaked at the periphery rather than at the center of the core as in most other reactors.

3.4.2. Description of the Reactor

The HFBR uses highly enriched U-235 fuel and a heavy water moderator to sustain a controlled nuclear reaction. The core consists of 28 elements (Figure 3.4.2), each containing 18 curved fuel plates (of the Materials Testing Reactor Type). Each fuel element is a U_3O_8-Al cermet with aluminum cladding. The fuel elements are placed in a roughly cylindrical arrangement inside a spherical-shaped aluminum reactor vessel. The core is approximately 53 cm high and 48 cm in diameter, has an active volume of about 97 liters and contains a maximum of 9.8 kilograms of U-235. The HFBR vessel is shown in Figure 3. The D_2O moderator is pumped downward through the spaces between the fuel element plates at a pressure of 200 psi, carrying away the thermal energy developed in the core during normal

reactor operation. The D_2O is circulated through a pair of heat exchangers where the heat is transferred to an H_2O secondary loop which dissipates the heat into the air through a set of cooling towers. The HFBR statistics are summarized in Table 3.4.1.

Outside the reactor vessel is a water-cooled thermal shield of steel and lead 23 cm thick. This secondary vessel protects the surrounding outer shield from excessive heating by radiation from the reactor and provides containment to keep the core covered with heavy water in the event of a leak in the reactor vessel. An outer shield, known as the biological shield, protects the reactor operators and experimenters from the radiation produced in the reactor. The biological shield, which has a minimum thickness of 2.4 meters, is a combination of heavy concrete and steel.

Sixteen control rods containing dysprosium and europium oxides act as neutron "poisons" to absorb thermal neutrons and control the rate at which the nuclear reaction takes place. These rods are located just outside the core and are arranged into two groups, a main bank which can be raised above the core, and an auxiliary bank which can be lowered below the core. Shutdown of the chain reaction is accomplished by masking the core from the return of thermal neutrons from the reflector by covering the sides of the core with the control rod blades. During normal operation, the neutron flux is maintained constant at the core midplane by withdrawing the control rods approximately symmetrically from the top and bottom of the core as fuel burnup progresses.

The reactor, its auxiliary equipment, and its experimental facilities are contained in a welded steel hemisphere 53.6 meters in diameter. While the reactor is in operation, the air pressure inside the building is kept slightly lower than the atmospheric pressure outside to ensure that any air leakage is inward rather than outward. Access to the building is provided by a system of air locks. This building provides the final containment barrier against the

escape of radioactive material into the environment. All ventilation air leaving the building is processed through high efficiency particulate filters and charcoal absorbers before being discharged from a 100 meter stack.

There are three basic floor levels in the building (Figure 3.4.4). The bottom floor is known as the Equipment Level. The main features of this level are a shielded cell in the center of the floor, containing the primary coolant system pumps and heat exchangers, and the fuel storage canal. The highly radioactive spent fuel elements are discharged into the canal through a chute passing down from the top of the reactor vessel through the concrete shielding. The canal's total storage capacity is 980 elements. The canal is 6 meters deep for most of its length, with a 9 meter deep pit at the end of the fuel discharge chute. The spent fuel elements are stored under the shielding water of the canal until most of the radioactivity has decayed, and the elements can be shipped offsite to a fuel reprocessing plant for recovery of the unused U-235. Other auxiliary equipment located on this floor includes heat exchangers and pumps for the coolant for the thermal shield and the biological shield, purification systems for the D_2O coolant and canal water, as well as the equipment supplying the building with electrical power, steam, hot water, and compressed air.

The Operations Area is on the top floor of the building. The reactor shielding structure rises 2.3 meters above floor level in the center of the area. The reactor control room, the pumps and heat exchangers for the cooling system for the vertical irradiation tubes, the D_2O storage tank for the primary coolant system, offices, work rooms, and the fuel storage vault are located on this floor. An 18,000 kg overhead crane services the reactor top and the adjacent area in which replacement of spent fuel elements takes place. The Experimental Area occupies the middle floor with the reactor in its center.

3.4.3. Irradiation and Experimental Facilities

The experimental facilities at the HFBR include nine horizontal beam ports external beam experiments (Figure 3.4.2.). Irradiation experiments at the HFBR play an important role in the overall research program. Seven vertical thimbles provide a variety of neutron energy spectra for sample irradiations. Thermal or slow neutrons are used primarily for neutron activation analysis and for the production of special purpose radioisotopes. Due to the high neutron flux available, it is possible to produce highly radioactive samples from small quantities of material (high specific activity), and to produce certain isotopes in quantities unattainable by any other practical means. Fast neutron irradiations are vital to the study of radiation damage in materials and are playing an important role in the program to develop a fusion reactor.

As shown in Figure 3.4.2, three of the irradiation thimbles (V10, V11, and V12) are located in the reflector portion of the reactor, while the others are positioned at the core edge (V14) and at the core center (V15 and V16). The thimbles are fitted with a set of reentrant tubes connected to a separate D_2O cooling system which circulates a flow of 45 liter/min downward through the center and upward through the outer annular region of each tube. Samples are placed in aluminum capsules which are immersed in the D_2O for cooling. Each capsule is attached to the end of a 10 meter length of 6 mm diameter aluminum tubing which is used to lower the sample capsule into the reactor and to withdraw it after the irradiation. In addition, this tubing can be used to vent the capsule, to fill it with gas for heat transfer, and to bring out a pair of thermocouple leads, if desired. A hydraulic "rabbit" is also available at Facility V11 which permits rapid insertion and retrieval of samples for precisely-timed irradiations of short duration.

Table 3.4.1. HFBR Statistics

Reactor power	30 million watts*
Total fast neutron flux, fuel region	1.2×10^{15} n.cm^{-2}.s^{-1} *
Maximum thermal flux, reflector	5.2×10^{14} n.cm^{-2}.s^{-1} *
Active core volume	97 liters
Active height of core	52.7 cm
Diameter of core (equivalent cylinder)	47.8 cm
Number of fuel elements in core	28
Dimensions of fuel element	
Cross section (19 fuel plates)	8.113x7.163 cm
Length of 2 outer fuel plates	58.4 cm
Length of 17 inner fuel plates	52.7 cm
Total length of fuel element	154.4 cm
U-235 content of fuel element	351 g
Total U-235 loading	9.8 kg
Reactor coolant	Heavy water (D_2O)
Total coolant flow rate	1150 liters/sec
Maximum operating coolant pressure	250 psig
Maximum operating coolant temperature	65°C
Maximum temperature at fuel element surface	≈175°C
Number of control rods	16
Dimensions of control rod cross section (rods are right angle shape)	7.6x7.6x1.78 cm
Length of main rods	102.9 cm
Length of auxiliary rods	31.8 cm
Neutron absorber in rods	Dy_2O_3 and Eu_2O_3
Diameter of spherical portion of reactor vessel	208.3 cm
Diameter of neck of reactor	121.9 cm
Thickness of thermal shield (lead and steel)	22.9 cm
Minimum thickness of biological shield (heavy concrete)	243.8 cm

*Current power at 30 MW with total neutron flux of 1.2×10^{15} n.cm^{-2}.s^{-1} and thermal neutron of 5.2×10^{14} n.cm^{-2}.s^{-1} at the reflector.

Table 3.4.2. HFBR Irradiation Facilities and the Corresponding Calculated Neutron Fluxes at 30 MW Power

Facility	Flux, neutrons.cm^{-2}.s^{-1} Thermal	Fast (>1 MeV)	Heating Rate, Watts/g (in aluminum)	Temperature (°C)	Useable Dimensions Dia. (cm)	Length (cm)
V10 Reflector	1.4×10^{14}	3.8×10^{11}	0.25	50-60	2.0	7.6
V11 Reflector*	7.5×10^{13}	4.5×10^{10}	0.15	50-60	2.0	7.6
V12 Reflector	1.9×10^{14}	4.2×10^{11}	0.80	50-60	2.0	7.6
V14 Core-edge	4.2×10^{14}	4.5×10^{13}	4.0	50-60	2.0	7.6
V15 In-core	1.0×10^{14}	1.5×10^{14}	8.0	50-60	2.0	7.6
V16 In-core	1.0×10^{14}	1.5×10^{14}	8.0	50-60	2.0	7.6

*This facility permit rapid insertion and retrieval of samples via hydraulic tube rabbit.

Experiments in beam tubes, irradiation thimbles or elsewhere around the reactor, which potentially could exceed the envelope of reviewed conditions discussed above, or which might present new and unique hazards, will be regarded as "unreviewed hazards." Under the general terms of the prime contract between Associated Universities, Inc. and DOE, and in accordance with pertinent sections of the DOE Manual, such "unreviewed hazards" must be referred to DOE for concurrence before they are permitted at the HFBR. All types of experiments that have been placed in and around the reactor have been reviewed by the BNL Reactor Safety Committee (RSC), and each new experiment proposed which falls outside the envelope of conditions previously approved will also be reviewed by the Safety Committee. The DOE Brookhaven Office is kept informed on a continuous basis of the experimental program and of the reviews and actions of RSC.

Safety is a line responsibility from the Director of the Laboratory to Department Chairmen. Each investigator at the HFBR is directly responsible to the Chairman of the Department with which he is associated to conduct his experiment in accordance with prevailing safety regulations. In general, the investigator has the prime responsibility for planning, designing, fabrication, testing, operation, maintenance, and ultimate disposal of all equipment required exclusively for his experiment. The investigator is responsible for conforming to appropriate safety standards, and for furnishing all information required for safety review by others.

It is the responsibility of the Reactor Division Research Coordinator to work with the investigators to assure that the HFBR facilities are used to the best advantage and in such a manner to guarantee the safety of the reactor. The Coordinator will aid the investigators in obtaining safety approval for their proposed experiments, seeking expert opinion where necessary to substantiate recommendations made to the RSC. For this purpose the

Coordinator will generally call upon an Experiments Review Team consisting of representatives from the Reactor Operations Group, Safety and Environmental Protection, and others from the Reactor Division who are familiar with experimental facilities and reactor characteristics.

3.4.4. Operating Schedule.

The HFBR is normally operated 24 hours per day for approximately 18 days. At the end of that time, the reactor is shut down for a period of 7 to 10 days for refueling and maintenance. Seven of the 28 fuel elements are normally discharged from the core and are replaced by fresh fuel during each shutdown period.

3.4.5. Supporting Services and Facilities

The experimental facilities also include laboratories, a computing room and health physics office. A radial 18,000 kg traveling beam crane serves this area. A hot cell for opening irradiated target capsules is currently under construction in the Operational Area. Truck and fork lift access is provided by two separate air locks. A balcony above the main floor is available for observation and accommodates washrooms, offices, and air conditioning equipment. A machine shop is located adjacent to the main level outside the containment building.

3.4.6. Administrative and Service Contacts

Irradiations can be scheduled by contacting

Dr. David Rorer, Deputy Head
Reactor Division
Brookhaven National Laboratory
Upton, NY 11973 (516) 282-4056 or 4436

Dr. Norman Holden,
HFBR Research Coordinator
(516) 282-5204

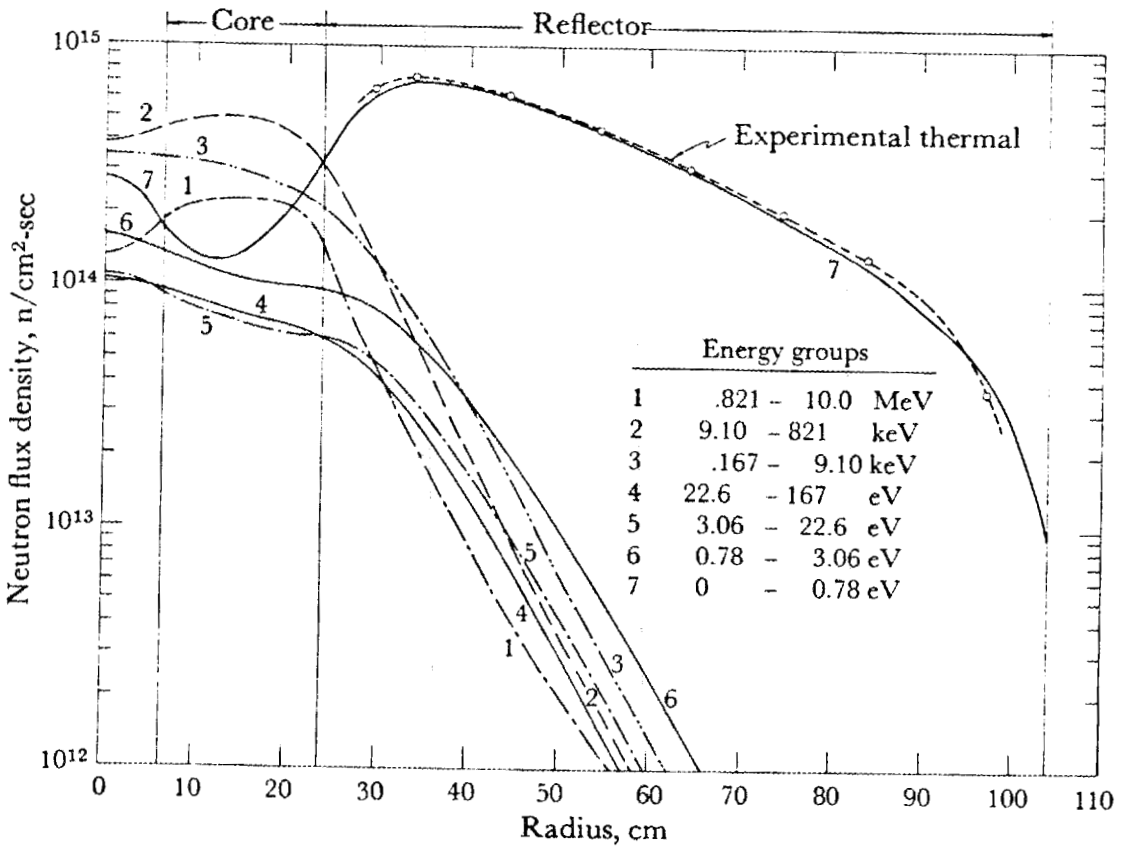

Figure 3.4.1. Calculated neutron flux distributions (at 40 MW power) as a function of radial distance from the center of the HFBR core.

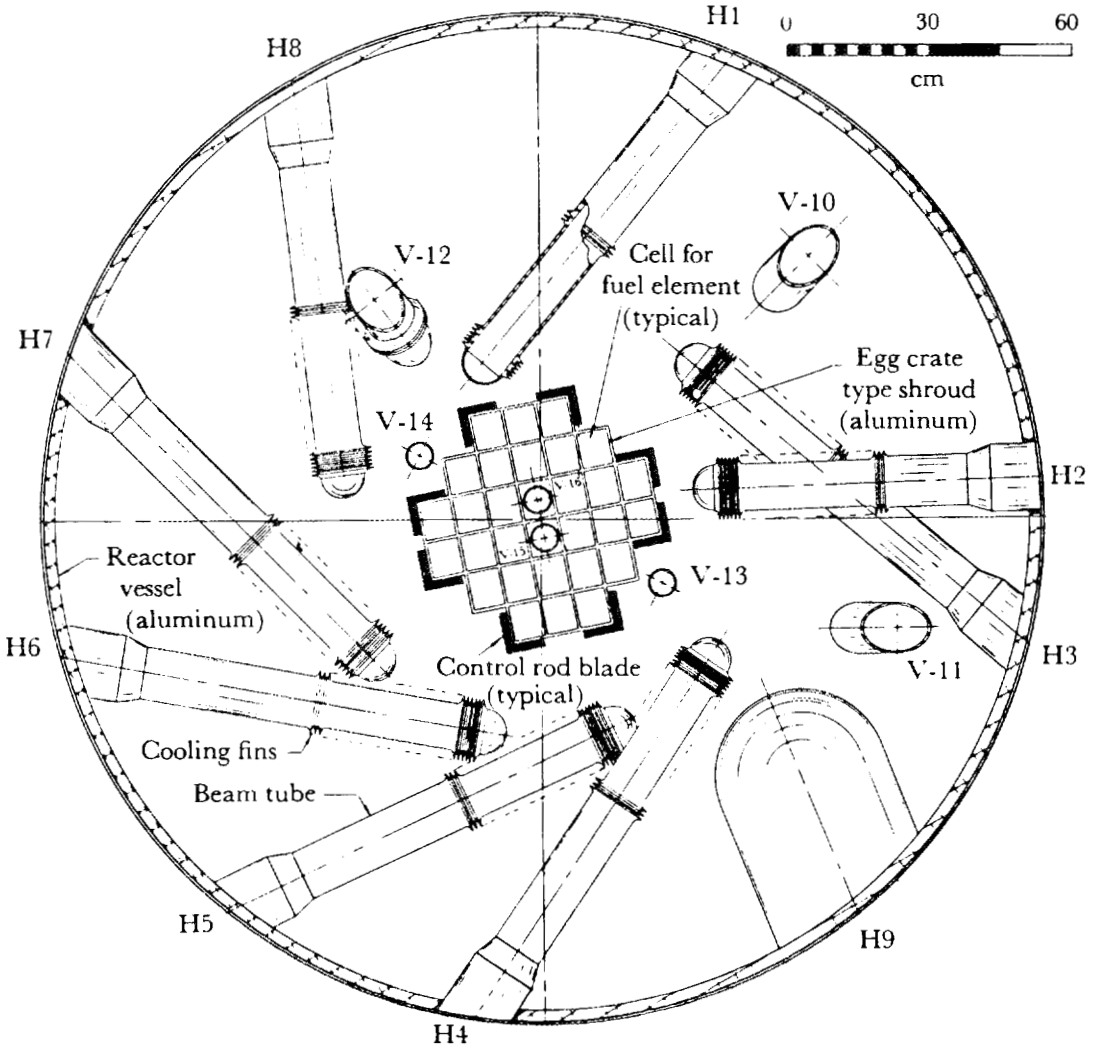

Figure 3.4.2. Horizontal cross-section of the HFBR core showing the location of the 28 feul elements, 9 beam tubes and 6 irradiation facilities.

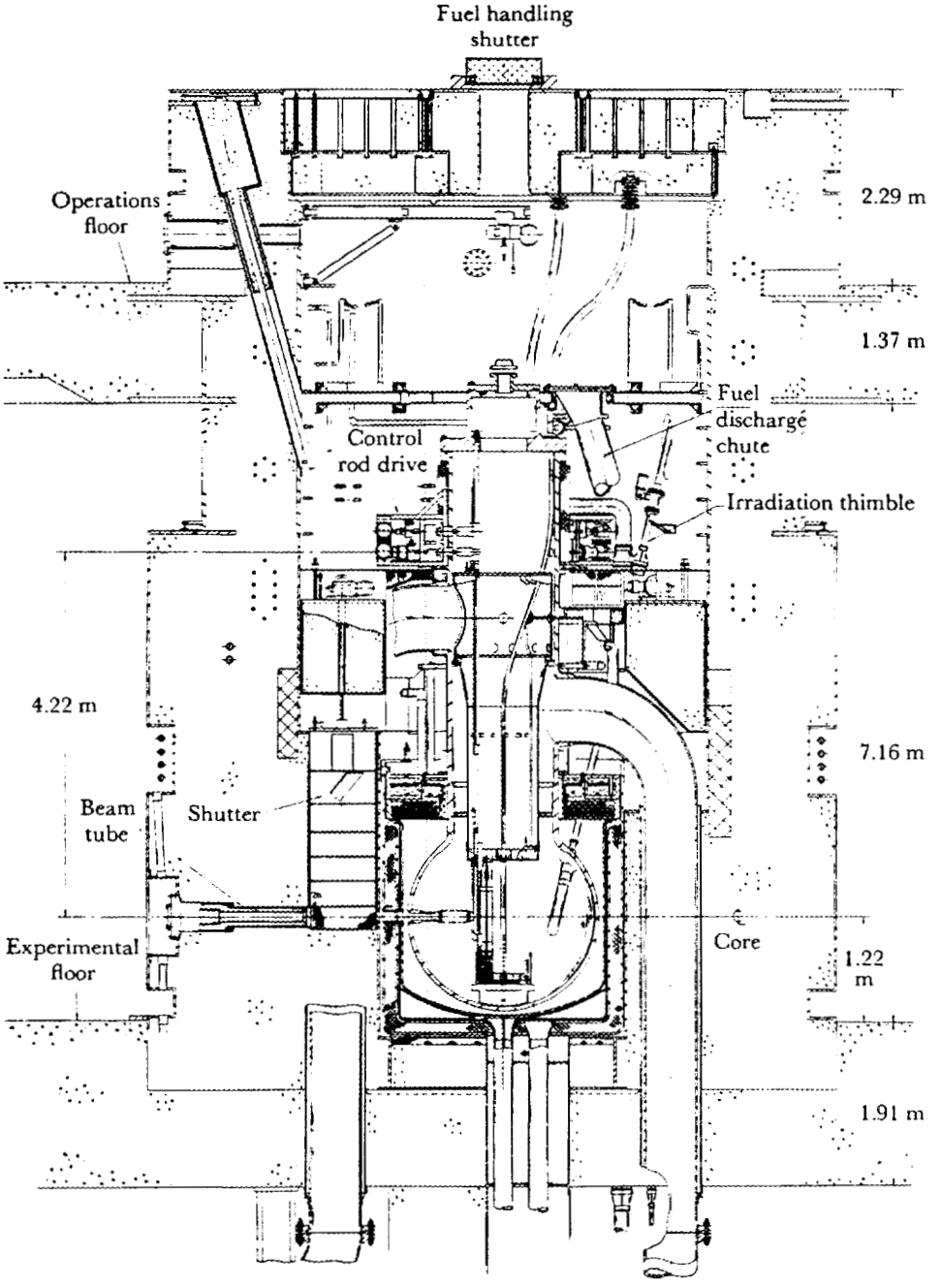

Figure 3.4.3. Vertical cross-sectional view of the HFBR showing the reactor vessel, and shielding. The operational and experimental area are also indicated.

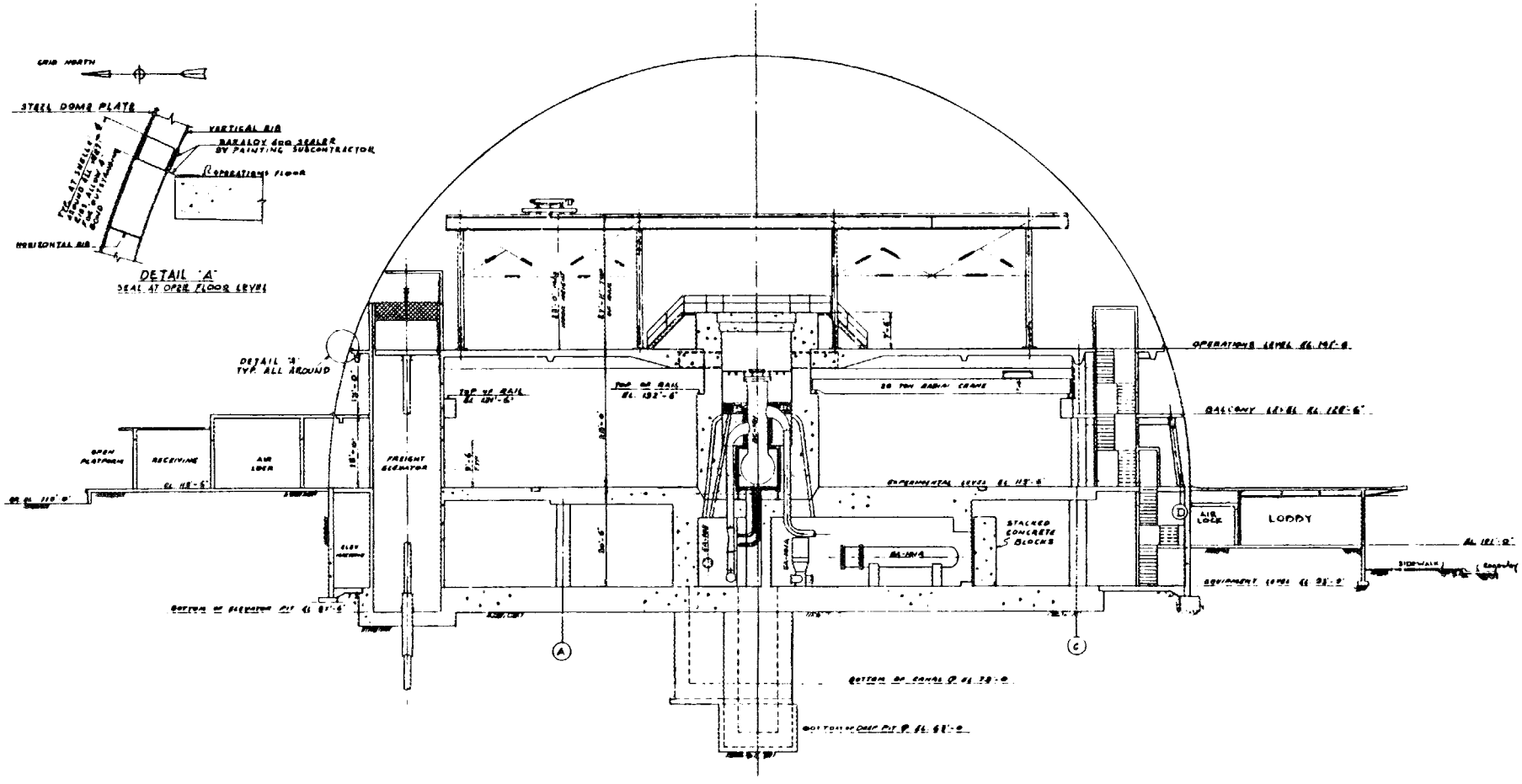

Figure 3.4.4. Elevation of the HFBR building in the north-south direction.

3.5.0. HIGH FLUX ISOTOPE REACTOR – HFIR

3.5.1. General
3.5.2. Description of Reactor
3.5.3. Irradiation and Experimental Facilities
3.5.3.1. Hydraulic Tube Facility
3.5.3.2. Target position
3.5.3.3. Peripheral Target Positions
3.5.3.4. Experiment Facilities in the Beryllium Reflector
3.5.3.5. Neutron Activation Analysis Laboratory and Pneumatic Tube Facility
3.5.3.6. Beam Tubes
3.5.3.7. Engineering Facilities
3.5.4. Operating Schedule
3.5.5. Supporting Services and Facilities
3.5.6. Administrative and Service Contacts

3.5.1. General

The High Flux Isotope Reactor (HFIR) is a versatile 85-MW radioisotope production and test reactor with the capability and facilities for performing a wide variety of irradiations. The HFIR is unique in the sense that it provides the highest steady-state thermal neutron fluxes available in any of the world's reactors, and neutron currents from the four horizontal beam tubes are among the highest available. Although the primary purpose of the HFIR was (and is) the production of transuranium isotopes, many experimental irradiation facilities were provided for in the original design, and several others have been subsequently added. Construction of the HFIR was completed in 1964 and criticality was achieved in August 1965. Low-power operation began in January 1966, and full-power (100 MW) operation was achieved in September 1966. In November 1986, HFIR was shut down for safety considerations; it resumed routine operation in July 1990. The concern over vessel embrittlement has resulted in reduction of the reactor power to 85 MW. Accordingly, all neutron flux values and nuclear heating rates in this document should be reduced by a factor

of 0.85, except where otherwise noted. The recent improvements during the extended shutdown have significantly enhanced the capability of the HFIR to perform material irradiation testing by providing the capability to accommodate up to 2 instrumented target capsules and eight large diameter irradiation capsules in the removable beryllium section.

3.5.2. Description of Reactor

The HFIR is a beryllium-reflected, flux-trap type reactor. It is cooled and moderated by light water, and it uses highly enriched ^{235}U (93%) as the fuel. The reactor core assembly is contained in a 2.44 m diameter pressure vessel located within a pool of water. Figure 3.5.1 shows the location of the pressure vessel within the reactor pool and some of the experimental facilities. The top of the pressure vessel and the reactor horizontal midplane are 5.18 and 8.38 m below the pool surface, respectively. The control-rod drive mechanisms are located in a subpile room beneath the pressure vessel. These features provide the necessary shielding for working above the reactor core as well as greatly facilitating access to the pressure vessel, core, and reflector regions. The vertical cross-sectional view of the HFIR pressure vessel and core are shown in Figure 3.5.2. The reactor core, illustrated schematically in Figure 3.5.3, consists of a series of concentric annular regions, each approximately 61 cm high, with a 12.7 cm in diameter cylindrical cavity (flux trap) at the center. The fuel region is composed of two concentric fuel elements as shown in Figure 3.5.4. The inner and outer elements contains 171 and 369 fuel plates, respectively. The fuel plates are 13 mm thick and are curved in the shape of an involute, thus providing a constant coolant channel width. A typical fuel (U_3O_8-Al) cermet contains 9.4 kg of ^{235}U and 2.8 g of ^{10}B. The average core lifetime is approximately 23 days at 85 MW.

The fuel region is surrounded by a concentric ring of beryllium reflectors

approximately 30 cm thick. This in turn is subdivided into three regions: (1) the removable reflector, (2) the semipermanent reflector, and (3) the permanent reflector, as shown in Figure 3.5.5. The beryllium is surrounded by a water reflector of effectively infinite thickness. In the vertical direction the reactor is reflected by water. The control plates, in the form of two concentric cylinders, are located in an annular region between the outer fuel element and the beryllium reflector. These plates are driven in opposite directions. Reactivity is increased by downward motion of the inner cylinder, which is used only for shimming and regulation; that is, it has no fast safety function. The outer control cylinder consists of four separate quadrants, each having independent drive and safety release mechanism. Reactivity is increased as the outer plates are raised. All control plates have three regions of different poison content designed to minimize the axial peak-to-average power-density ratio throughout the core lifetime.

3.5.3. Irradiation and Experimental Facilities

In addition to the central flux trap, which at present is used primarily for production of transplutonium isotopes, there are several other irradiation facilities, all of which are located in the beryllium reflector. Figures 3.5.6 and 3.5.7 show the HFIR irradiation facilities which include the following:

1. **Hydraulic Tube Facility (HT)**
2. **Target Positions (TP)**
3. **Peripheral Target Positions (PTP)**
4. **Facilities at the Beryllium Reflector (RB, CRAP and VXF)**
5. **Neutron Activation Facilities**
6. **Beam Tubes**

7. Engineering Facilities

The neutron flux values for various facilities are given in Figures 3.5.8 and 3.5.9, and Tables 3.5.1 and 3.5.2. These unperturbed values were obtained prior to the November 1986 shutdown at 100 MW, primarily from one-dimensional 33-group diffusion theory calculations supplemented by a limited number of two-dimensional four group diffusion theory calculations. The calculated unperturbed fluxes are accurate to within 15% of the actual values in regions away from the control rods. The accuracy of calculated values near the control region is probably somewhat more uncertain, especially with regard to the thermal-neutron flux values at the beginning of the fuel cycle when the control rods are partially inserted. Therefore, prospective users of experiment facilities located near the control region would be well advised to give appropriate consideration to the accurate assessment of neutron flux values therein if accuracy is a program requirement. Further, it should be recognized that experiments in one facility can perturb the fluxes in closely adjacent facilities. Prospective experimenters should give appropriate consideration to these factors. Three standard capsule designs are available which are adaptable to a wide variety of requirements for the irradiation of both fuels and materials.

3.5.3.1. Hydraulic Tube Facility (HT)

The hydraulic tube facility which is located in the very high flux region of the flux trap allows for insertion and removal of samples while the reactor is operating. These positions are allocated to research conducted by ORNL Nuclear Medicine Group. The hydraulic tube facility consists of nine vertically stacked capsules centered just adjacent to the core horizontal midplane. This facility was originally located in the center of flux trap (Figures 3.5.6 and 3.5.7). During the HFIR upgrade, however, the hydraulic tube facility was moved off center

from location D-4 to B-3, see Figure 3.5.7. The water-pressure-drops that exist in the primary coolant system are utilized as the driving forces for moving the capsules through the system. The most recent design of HT capsule is shown in Figure 3.5.10. Capsules 1 and 9 have a different design and are not used for target materials, but track the stringer entry and exit by monitoring of the Cherenkov glow. Normally, the heat flux at the surface of the capsule, due to neutron and/or gamma heating of the capsule and its contents, is limited to 2.52×10^5 W/m^2. Furthermore, the neutron poison content of the facility load is limited such that the reactor is not subjected to a significant reactivity change during the insertion or removal of capsules. The absolute and relative thermal and fast neutron fluxes in HT array are shown in Figure 3.5.9.

3.5.3.2. Target Positions (TP)

Thirty target positions in the flux trap are provided (see Figure 3.5.7). Normally these positions are occupied by target rods used for the production of transplutonium elements, but other targets can be irradiated in any of these positions. The targets in these positions are cooled by primary system water at a velocity of about 12.80 m/s under normal full flow conditions. Excessive neutron poison loads in experiments in target positions are discouraged due to their adverse effects on both transuranic production rates and fuel cycle length. Such experiments require careful coordination with and accommodation to the requirements of the transuranium production program. During the recent upgrade of the HFIR, provision was made for accommodating access tubes or instrument leads for three target positions. A relatively inexpensive target capsule for the target region has a dimension of 1.35x50.8 cm (dia. x length), a typical design is shown in Figure 3.5.11-A. At 85 MW power, the perturbed peak total neutron flux in the target region is 4.4×10^{15} $neutron.cm^{-2}.s^{-1}$ with the perturbed

peak fast-neutron flux (En > 0.183 MeV) of 1.0×10^{15} $n.cm^{-2}.s^{-1}$. The variation with time of the horizontal midplane thermal-neutron fluxes throughout the flux trap region is shown in Table 3.5.1. These values apply to the condition wherein no peripheral target position experiments are installed. Installation of six "typical" peripheral target position experiments depresses the thermal-neutron flux to the extent of 7 to 15% within the flux trap, depending on the particular location. However, the corresponding effect on the fast-neutron flux (E > 0.183 MeV) is insignificant (see Reference 1 for details). Calculated γ-heating rates in Al for the TP facilities are given in Table 3.5.3 (γ-heating rates are symmetric about the horizontal midplane).

3.5.3.3. Peripheral Target Positions (PTP)

Six peripheral target positions are located at the outer radial edge of the flux trap (see Figure 3.5.7). Fast-neutron fluxes in these positions are the highest accessible in the reactor although at this location there exists a steep radial gradient in the thermal-neutron flux. At normal full system flow, a pressure drop of 36 psi (2.48×10^5 Pa) is available to provide coolant for the experiment. A typical experiment contains a neutron poison load equivalent to that associated with 200 g of aluminum and 35 g of stainless steel distributed uniformly over a 50.8 cm length. The PTP experiments containing neutron poison loads significantly in excess of that described above are discouraged due to their adverse effects on transuranium production rates, fuel cycle length, and fuel element power distribution. All PTP experiments are noninstrumented. The irradiation capsule used in the PTP facilities are typically 1.27x61 cm (dia. x length). Specimen temperatures are controlled by controlling the widths of gas-filled heat conductive gaps between the specimens and the specimen holder.

3.5.3.4. Irradiation Facilities in the Beryllium Reflector

Numerous vertical irradiation facilities of various sizes are located throughout the beryllium reflector. These facilities include large and small removable Beryllium Reflector facilities (RB), Control-Rod Access Plug Facilities (CRAP) and Vertical Experiment Facilities (VXF). These facilities can accommodate either instrumented or noninstrumented experiments with the exception of the CRAP and small RB facilities which can not provide instrumentation. When not in use, these facilities contain Be plugs. A pressure drop of 10 psi (6.89×10^4 Pa) at full system flow is available in these facilities for primary cooling of the targets. The variation with time of the horizontal midplane thermal-neutron fluxes in the various experiment facilities in the beryllium reflector is shown in Table 3.5.2. Axially, these fluxes are approximately cosine-shaped and, with the exception of those in the RB facilities, which are essentially symmetric about the horizontal midplane. At the start of the fuel cycle, the axial shape of thermal-neutron flux in the RB facilities is slightly skewed toward the bottom of the core; however, at the end of the cycle it becomes essentially symmetric about the horizontal midplane. Table 3.5.2 also gives the fast-neutron flux (E_n>0.183 MeV) values at the horizontal midplane for the facilities. Axially, these fluxes are cosine-shaped and are essentially symmetric about the horizontal midplane.

Removable Beryllium Facilities (RB)

Eight large removable beryllium facilities (designated RB-1A&B, RB-3A&B, RB-5A&B, and RB-7A&B) are located in the removable beryllium near the control region (see Figure 3.5.6). The vertical centerline of these facilities is located 27.31 cm from the vertical centerline of the reactor. These facilities are lined with a permanent aluminum liner having an inside diameter of 4.60 cm. Either instrumented or noninstrumented experiments can be

irradiated in these facilities. Instrument leads and access tubes are accommodated through removable plugs in the upper shroud flange and through special penetrations in the pressure vessel upper cover. When not in use, these facilities contain beryllium plugs. To date, these particular facilities have been used primarily for HTGR fuel irradiations and production of radioisotopes.

Four small removable beryllium facilities (designated RB-2, RB-4, RB-6, and RB-8) are located in the removable beryllium near the control region (see Figure 3.5.6). The vertical centerline of these facilities is located 26.35 cm from the vertical centerline of the reactor. These unlined facilities have an I.D. of 1.27 cm and can accommodate only noninstrumented experiments. These facilities are used primarily for the production of radioisotopes, and when not in use, these facilities contain beryllium plugs. Experiments in RB facilities are carefully reviewed with respect to their neutron poison content.

Control-Rod Access Plug Facilities (CRAP)

The semipermanent beryllium contains four control-rod access plugs (see Figure 3.5.6), which provides access to the coupling between the safety rods and their associated drive mechanisms. Each standard control-rod access plug contains two 1.27 cm I.D., unlined irradiation facilities, making a total of eight in the reactor (designated CR-1 through CR-8). Normally, these facilities accommodate standard irradiation target rods of the type and configuration used in small RB positions, although, in principle, experiments having other configurations can be accommodated in them. The vertical centerlines of all control-rod access plug facilities are located 32.2 cm from the vertical centerline of the reactor.

Vertical Experiment Facilities (VXF)

The permanent reflector is penetrated by sixteen vertical holes, referred to as the small vertical experiment facilities, which extend completely through the beryllium. Each of these facilities has a permanent aluminum liner having an inside diameter of 4.02 cm. The facilities are located concentric with the core on two circles of radii 39.2 cm and 44.1 cm, referred to as inner and outer small VFXs, respectively (see Figure 3.5.6). VXF-7 (Figure 3.5.6) contains a pneumatic irradiation facility and is unavailable for other use. Either instrumented or noninstrumented experiments can be irradiated in these facilities. Instrument leads and access tubes to experiments in these facilities are accommodated through special penetrations in the pressure vessel upper cover.

The permanent reflector is penetrated by six vertical holes referred to as the large vertical experiment facilities (see Figure 3.5.6). These facilities are similar in all respects to the small VFXs facilities described above except for location and size and neutron fluxes. The aluminum liners in the large VXFs have an inside diameter of 7.20 cm, and the facilities are located concentric with the core on a circle of radius 46.3 cm. These facilities can be provided with temperature and pressure instrumentation as well as a sweep gas system which provides a means of temperature control using adjustable mixtures of high purity inert gases. Large neutron poison loads in these facilities are of no particular concern with respect to fuel element power distribution perturbations or effects on fuel cycle length because of their distance from the core.

3.5.3.5. Neutron Activation Analysis Laboratory and Pneumatic Tube Facilities

The HFIR pneumatic tube facilities are designed for irradiation of small samples in plastic or graphite capsules for accurate time intervals of a few seconds to 10 minutes. The

pneumatic facilities are in the permanent beryllium reflector, the capsule loading and unloading station is located in the experiment room of the neutron activation laboratory. The capsules are inserted into the reactor and returned to the laboratory using compressed air. The neutron fluxes and thermal to fast ratios for the two NAA facilities are given below.

Facility	Neutron Flux, $n.s^{-1}.cm^{-2}$	
	Thermal	Thermal/Fast (≥ 1 MeV)
A	2.3×10^{14}	40
B	5.5×10^{13}	200

3.5.4. Operating Schedule

Fuel cycles for the HFIR operating at full 85 MW power have ranged from 21 to 23 days (depending on the experiment and radioisotope load in the reactor) followed by an end-of-cycle outage for refueling. A typical end-of-cycle refueling outage lasts ~4-6 days; however, outages are occasionally extended as required to allow for control plate changeout, calibrations, maintenance, and inspection. Experiment insertion and removal may be accomplished during any end-of-cycle outage. Interruption of a fuel cycle for the purpose of experiment installation or removal is strongly discouraged. Deviations from the schedule are infrequent and are usually due to periodic changeout of major reactor components, reactor and experiment component malfunctions, etc.

3.5.4.6. Beam Tubes: Four horizontal beam tubes which originate in the beryllium reflector.

3.5.4.7. Engineering Facilities: Four slant access facilities located adjacent to the outer edge of the beryllium reflector.

3.5.5. Supporting Services and Facilities

Several hot cell facilities available at ORNL include the High-Radiation-Level Examination Laboratory (HRLEL), the Segmenting Cells, and the Physical Examination Hot Cells. HRLEL is used for post-irradiation mechanical disassembly and physical and metallurgical examination of highly radioactive materials. The quantities of Pu that can be handled are limited only by criticality considerations. Installed examination equipment includes complete metallography equipment, shielded electron microprobe analyzer, a shielded scanning electron microscope (SEM), and an SEM with nondispersive X-ray detection capabilities. The disassembly equipment includes a mill, hacksaw, bandsaw, and abrasive saws. Supporting photographic darkrooms, labs, shops, and change rooms are provided.

The Segmenting Cells are used for the post-irradiation mechanical disassembly of nuclear fuel elements and experiments up to 6.10 m long and 50.8 cm in diameter; some tests (tensile, bend, dimensional measurements, and others) are made in them, but most of the experiment parts are transferred to other cells for detailed examination.

The Physical Examination Hot Cells are used mainly for mechanical property testing of irradiated materials. Other services available to reactor experimenters at ORNL include engineering and maintenance services, instrumentation services, and chemical analysis and activation analysis services.

3.5.6. Administrative and Service Contacts

R. W. Hobbs, HFIR Experimental Coordinator
Building 7910, MS 6387
Oak Ridge National Laboratory
P.O. Box 2008
Oak Ridge, TN 37831
(615) 574-8789, (FTS) 624-8789

For service irradiations and availability of radioisotopes contact

E. D. Collins
Building 7930, MS 6385
(615) 574-6928, (FTS) 624-6928

R. L. Cline, ORNL Isotopes Distribution Office
Building 3037, MS 0204
(615) 574-6995, (FTS) 624-6995

For advice on the production and availability of medical radioisotopes contact

F. F. (Russ) Knapp, Nuclear Medicine Group
Building 3047, MS 6022
(615) 574-6225 (FTS) 624-6225
FAX: (615) 574-6226

S. Mirzadeh, Nuclear Medicine Group
Building 3047, MS 6022
(615) 574-8399 (FTS) 624-8399
FAX: (615) 574-6226

Table 3.5.1. Horizontal Midplane Thermal and Fast Neutron Fluxes at 85 MW in the HFIR Flux Trap with Standard Transuranium Target Installed[a]

Radial Distance from Reactor Vertical Centerline (cm)	Neutron Fluxes as a Function of Time in Fuel Cycle Fast ($n.cm^{-2}.s^{-1} \times 10^{15}$)				Fast Neutron Flux (>0.183 MeV) ($n.cm^{-2}s^{-1} \times 10^{15}$)
	0 Days	1 Day	11 Days	21 Days	
0.0	2.82	2.75	2.89	2.91	1.12
1.0	2.81	2.74	2.88	2.91	1.13
2.0	2.78	2.71	2.86	2.90	1.15
3.0	2.72	2.66	2.82	2.87	1.19
4.0	2.63	2.57	2.76	2.83	1.25
5.0	2.49	2.43	2.63	2.75	1.34
5.7	2.07	2.04	2.28	2.43	1.48
6.4	1.27	1.25	1.53	1.75	1.62

[a]The above values are for 100 MW operation. All values should be multiplied by 0.85 for 85 MW operation.

Table 3.5.2. Horizontal Midplane Neutron Fluxes at the Vertical Centerline of the Experiment Facilities in the Beryllium Reflector of the HFIR.[a]

Facility	Radial Distance Between Reactor Vertical Centerline and Facility Vertical Centerline (cm)	Thermal Neutron Flux as a Function of Time in Fuel Cycle ($n.cm^{-2}s^{-1} \times 10^{15}$) Days/ 0	1	11	21	Fast Neutron Flux (E_n>0.183 MeV) ($n.cm^{-2}s^{-1}$)
Small removable beryllium facilities	26.35	1.22	1.42	1.51	1.74	5.70×10^{14}
Large removable beryllium facilities	27.31	1.22	1.42	1.51	1.74	4.98×10^{14}
Control-rod access plug facilities	32.42	1.15	1.28	1.33	1.47	1.81×10^{14}
Inner small vertical experiment facilities	39.21	0.79	0.87	0.89	0.97	5.07×10^{13}
Outer small vertical experiment facilities	44.05	0.55	0.60	0.62	0.66	1.91×10^{13}
Large vertical experiment facilities	46.28	0.47	0.51	0.52	0.56	1.28×10^{13}

[a]All values should be multiplied by 0.85 MW current operational power.

Table 3.5.3. Gamma-Heating Rates for the Facilities in the Target Region of the HFIR.[a]

Facility (see Fig. 3.5.7)	R (cm)[b]	Gamma-Heating Rate in Aluminum (w/g) Elevation above Reactor Midplane (cm) 0.0	5.08	10.16	15.24	20.32	25.40
C3, C4, D3, D5, E4, E5	1.689	44.4	40.4	37.3	32.2	27.7	20.0
B3, C2, C5, E3, E6, F5	2.926	45.7	40.8	37.4	33.3	27.7	20.0
B2, B4, D2, D6, F4, F6	3.378	46.2	41.2	37.6	33.4	27.8	20.0
A2, A3, B1, B5, C1, C6 E2, E7, F3, F7, G5, G6	4.465	46.6	41.9	38.2	33.9	28.3	20.0
A1, A4, D1, D7, G4, G7	5.067	48.1	42.3	38.3	34.1	28.4	20.0

[a] Multiply all values by 0.85.
[b] Radial Distance from Reactor Vertical Centerline

Table 3.5.4. Gamma-Heating Rates for the Experimental Facilities in the Beryllium Reflector of the HFIR.[a]

Facility	R (cm)[b]	Gamma-Heating Rate in Aluminum (w/g) Elevation above Reactor Midplane (cm) 0.0	5.08	10.16	15.24	20.32	25.40
Small removable beryllium	26.35	22.5	20.0	18.2	15.3	11.3	8.2
Large removable beryllium	27.30	17.8	17.75	15.6	13.25	9.90	7.50
Control-rod access plug	32.42	8.11	8.00	7.70	7.12	6.25	4.56
Inner small vertical	39.21	3.92	3.84	3.70	3.42	3.15	2.89
Outer small vertical	44.05	2.50	2.40	2.32	2.18	2.11	1.95
Large vertical	46.28	2.00	1.93	1.86	1.75	1.72	1.57

[a]Multiply all values by 0.85.
[b] Radial Distance from Reactor Vertical Centerline

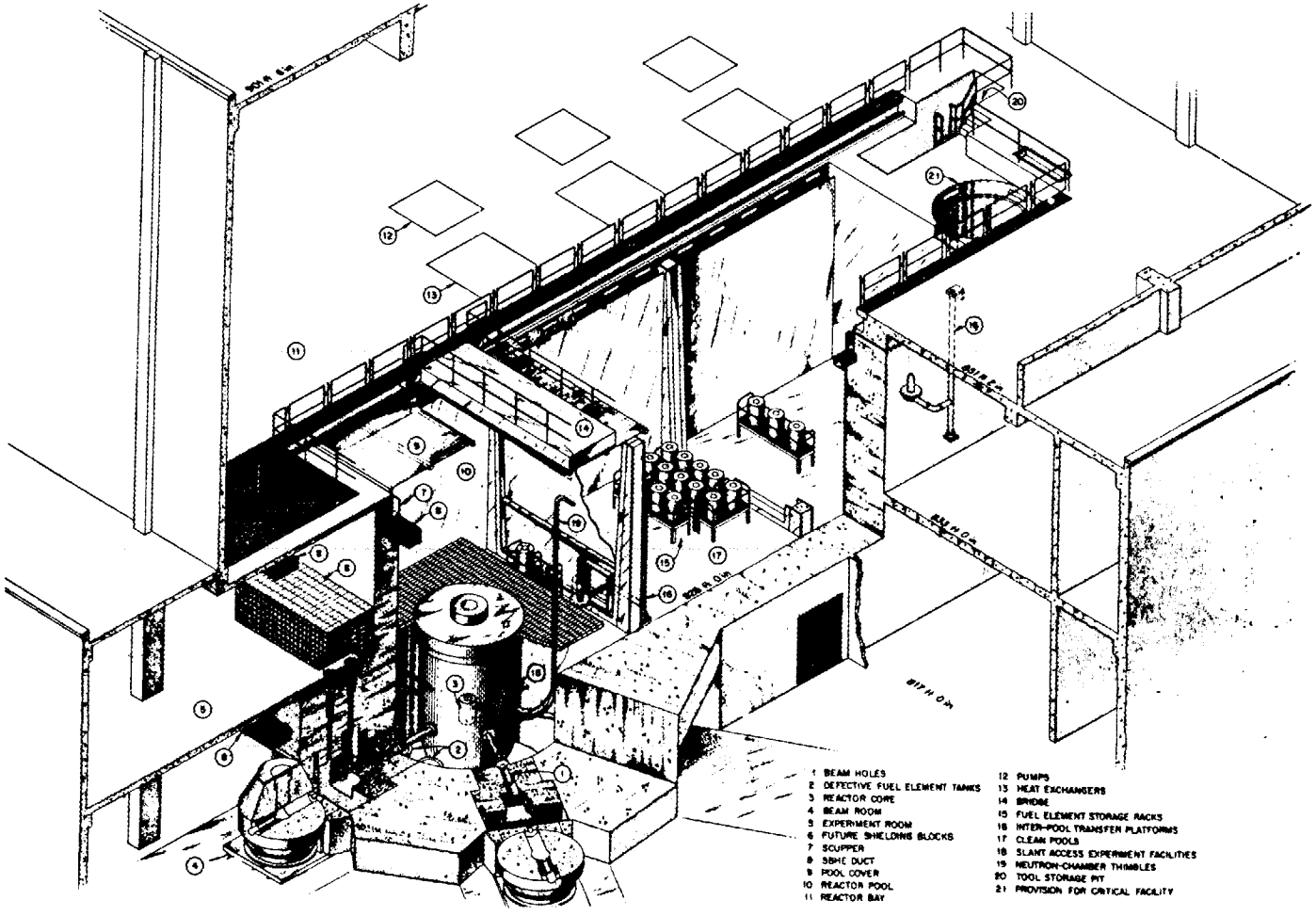

Figure 3.5.1. Location of the HFIR core within the reactor pools and Experimental Facilities

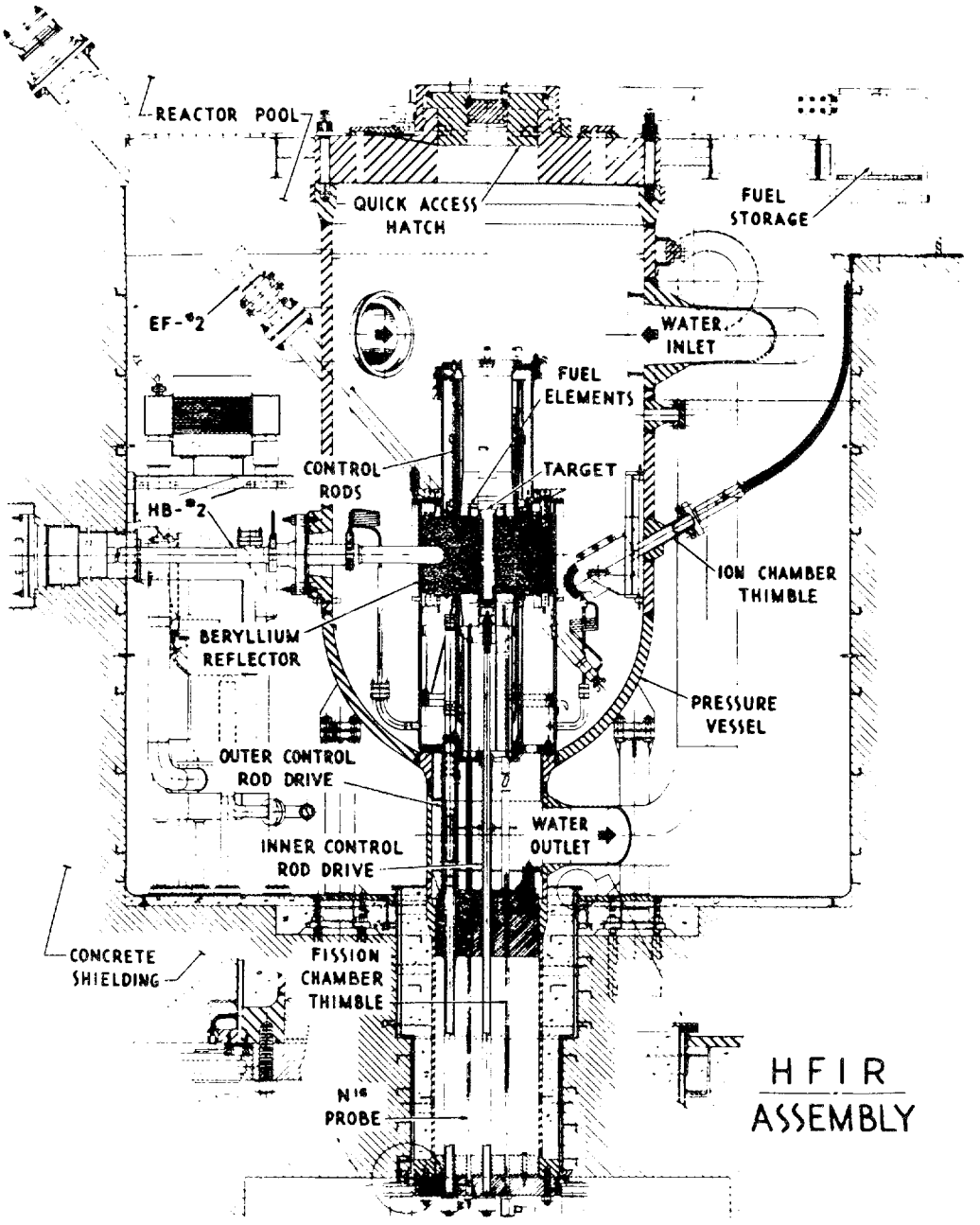

Figure 3.5.2. Vertical cross-section of the HFIR pressure vessel and core

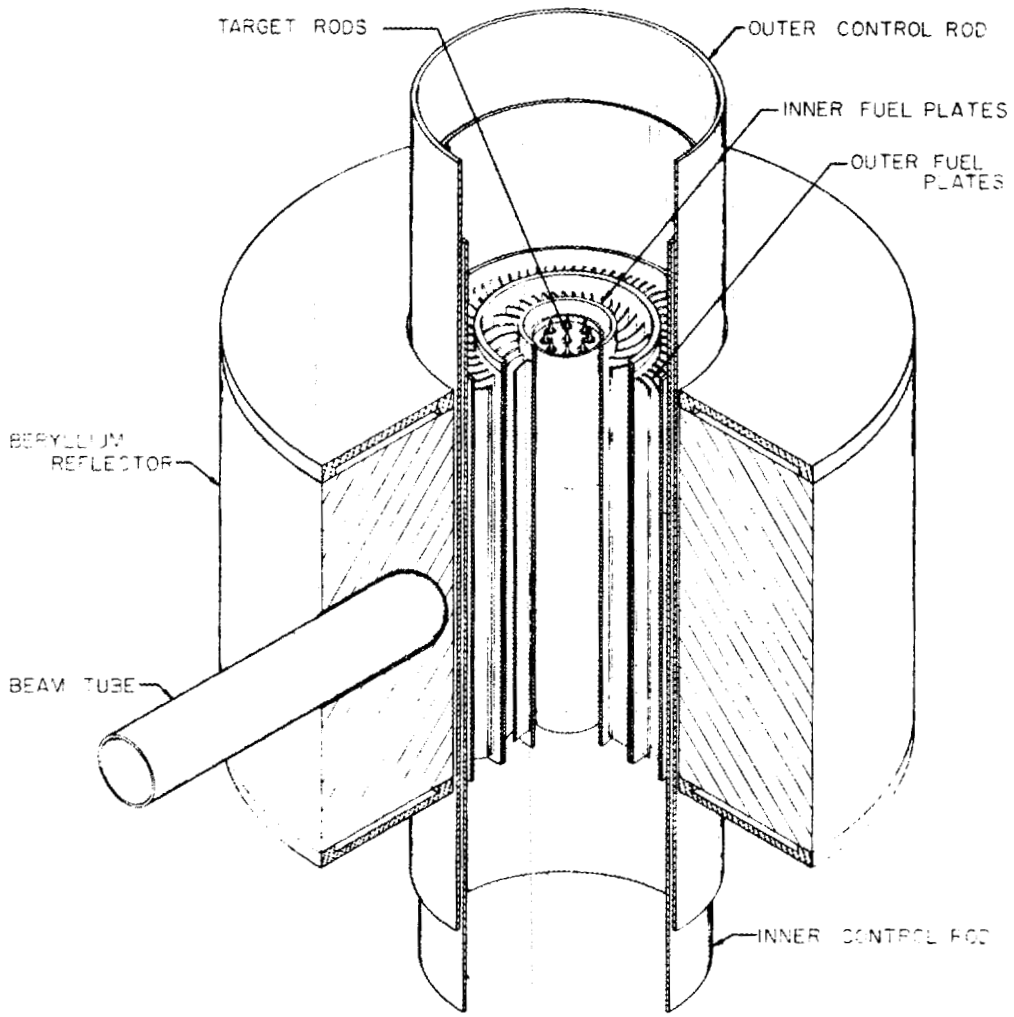

Figure 3.5.3. Schematic Illustration of the HFIR Core

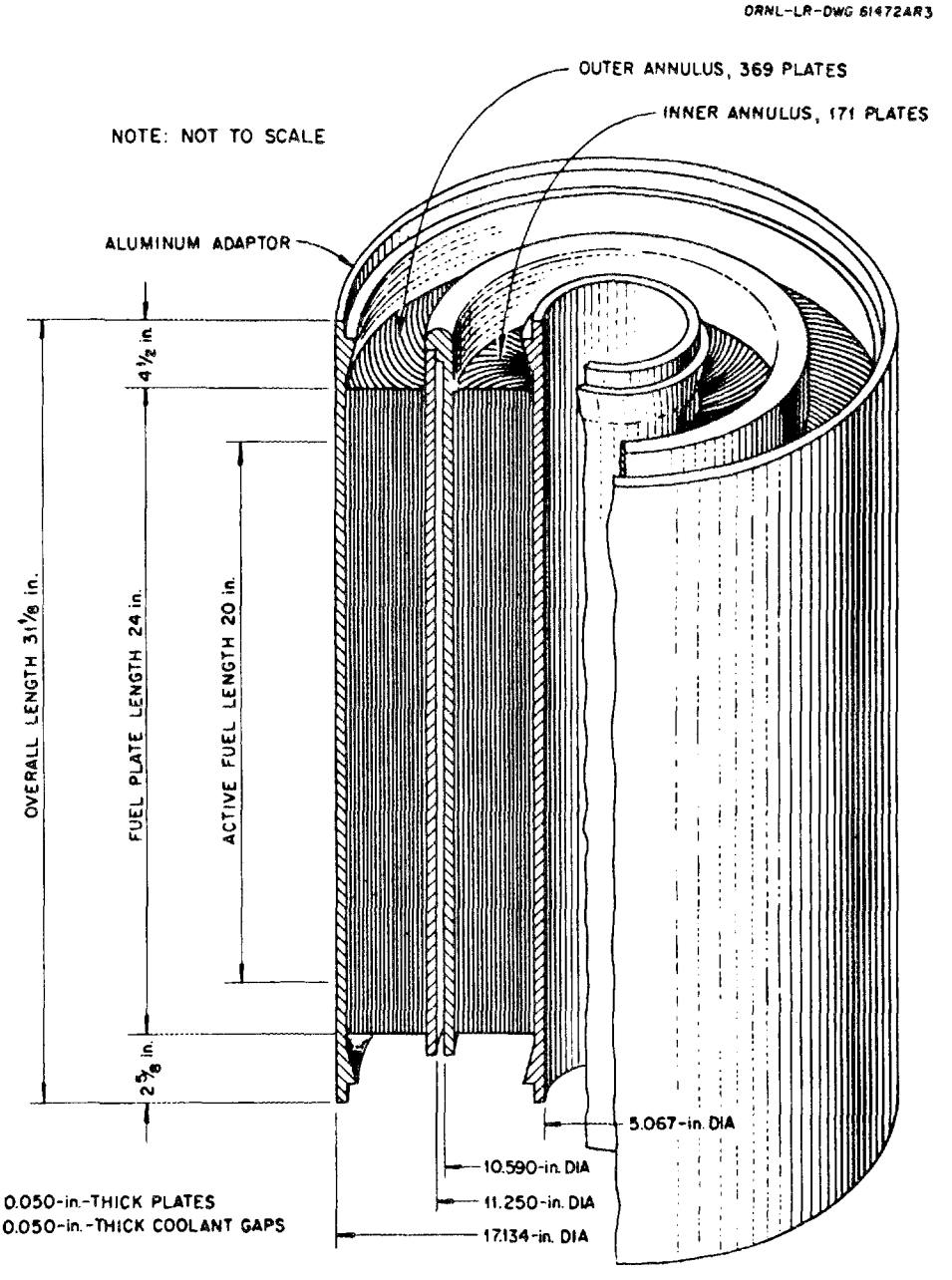

Figure 3.5.4. HFIR Fuel Element

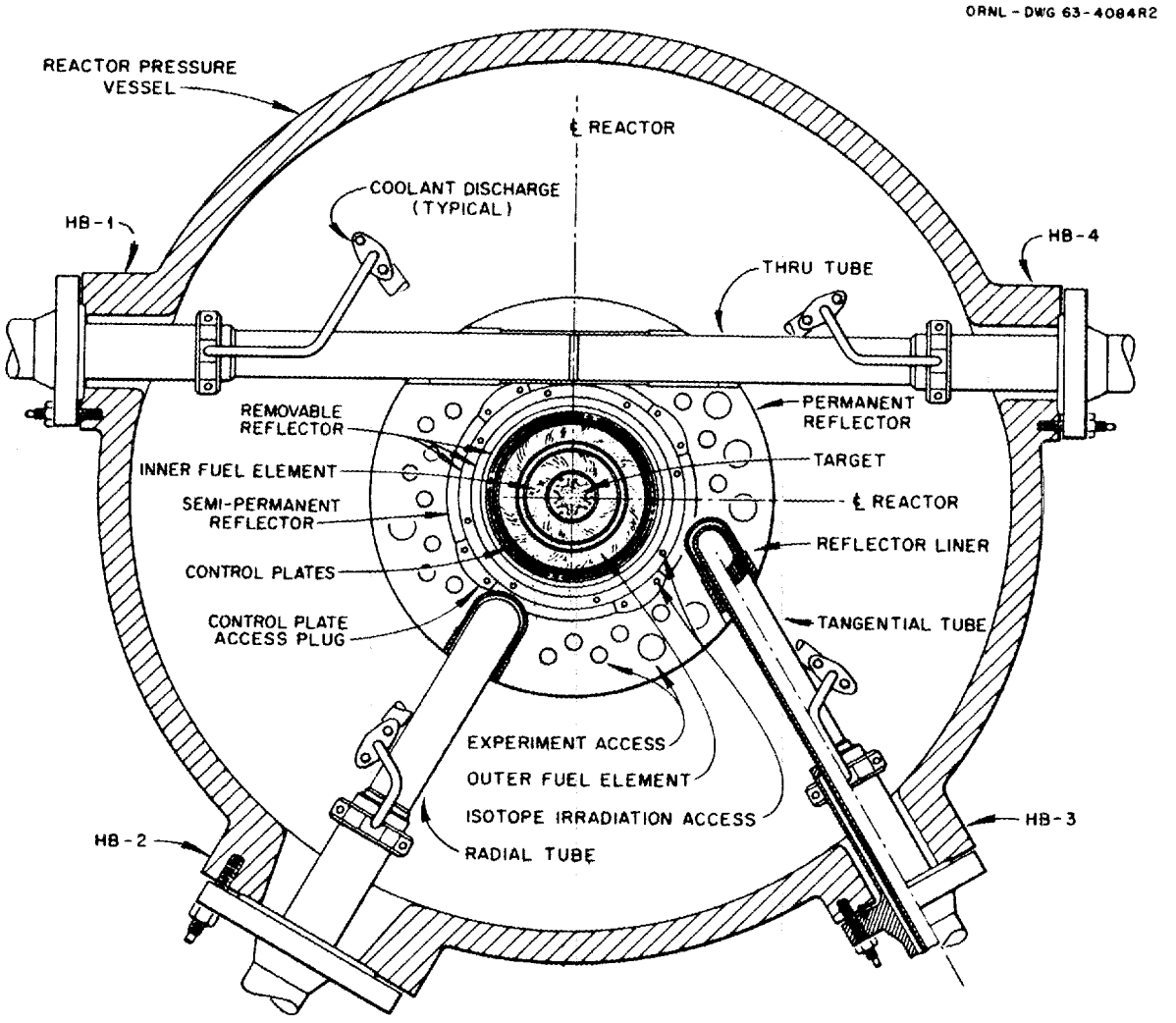

Figure 3.5.5. Cross-section of the HFIR pressure vessel at horizontal midplane showing orientation of beam tubs with respect the core and irradiation facilities

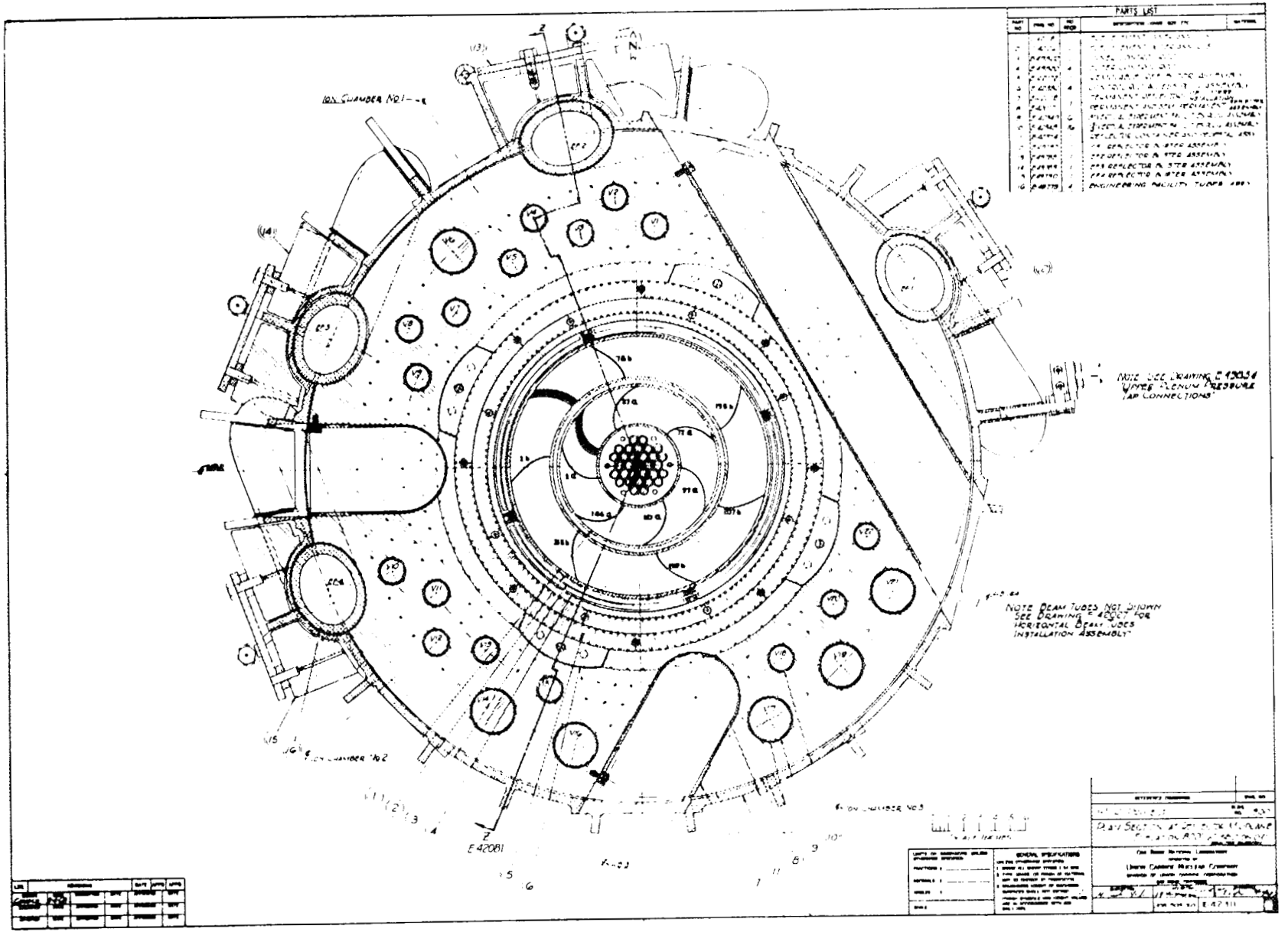

Figure 3.5.6. Cross-section of the HFIR core at horizontal midplane showing various irradiation facilities

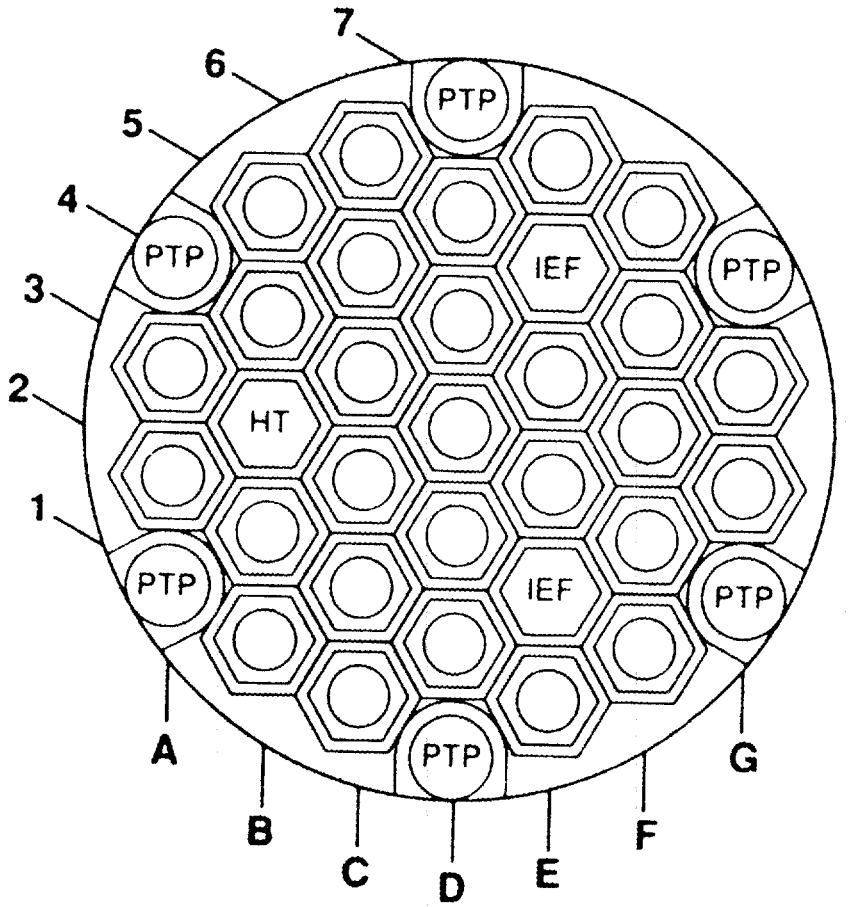

HT: Hydraulic Tube
PTP: Peripheral Target Position
IEF: Instrumented Exprimental Facilities

	Radial Distance from Reactor Vertical Centerline (cm)
C3, C4, D3, D5, E4, E5	1.689
B3, C2, C5, E3, E6, F5	2.926
B2, B4, D2, D6, F4, F6	3.378
A2, A3, B1, B5, C1, C6, E2, E7, F3, F7, G5, G6	4.465
A1, A4, D1, D7, G4, G7	5.067

Figure 3.5.7. Irradiation positions in the HFIR Flux Trap

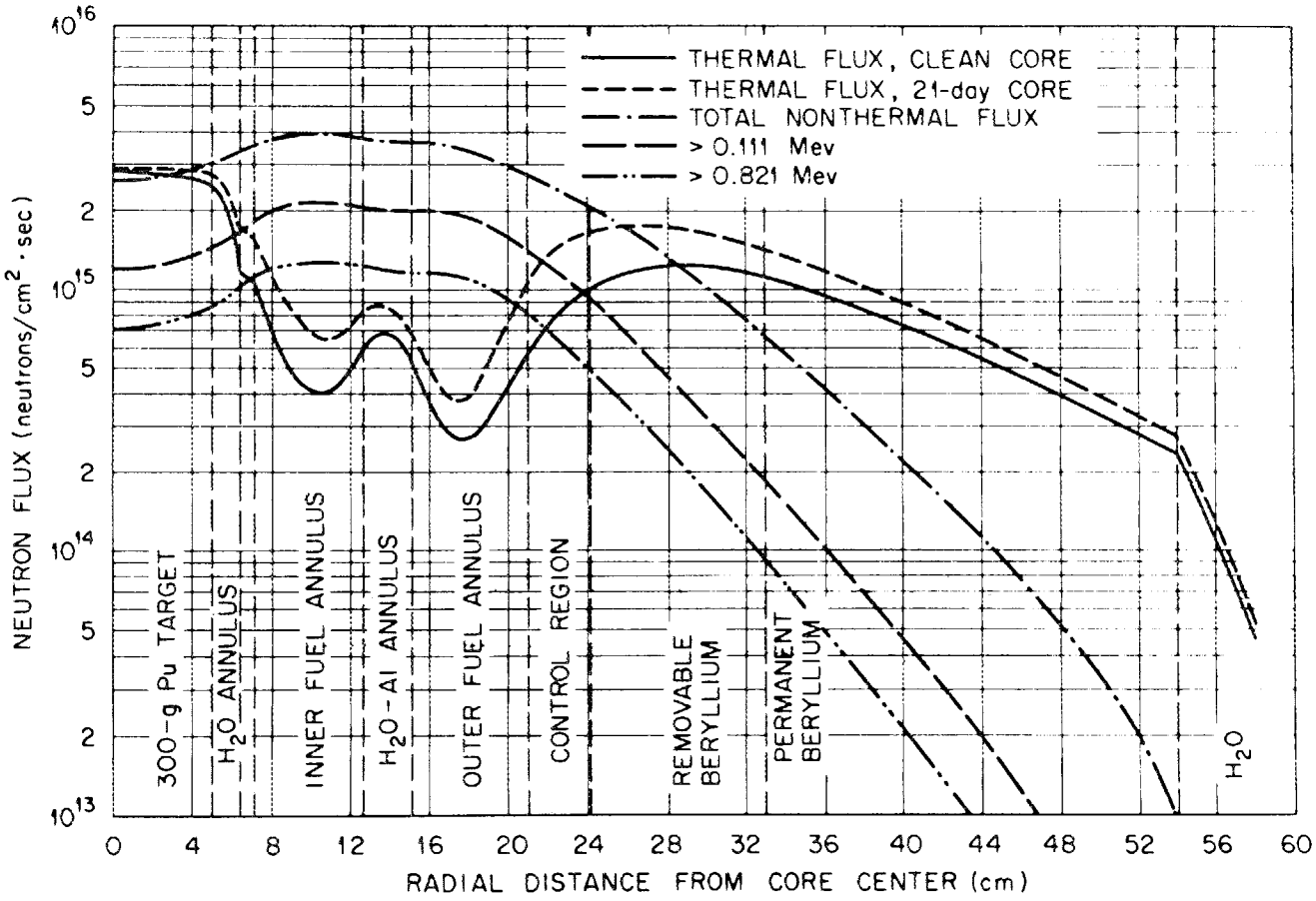

Figure 3.5.8. HFIR neutron flux distribution at core horizontal midplane with reactor operating at 100 MW.

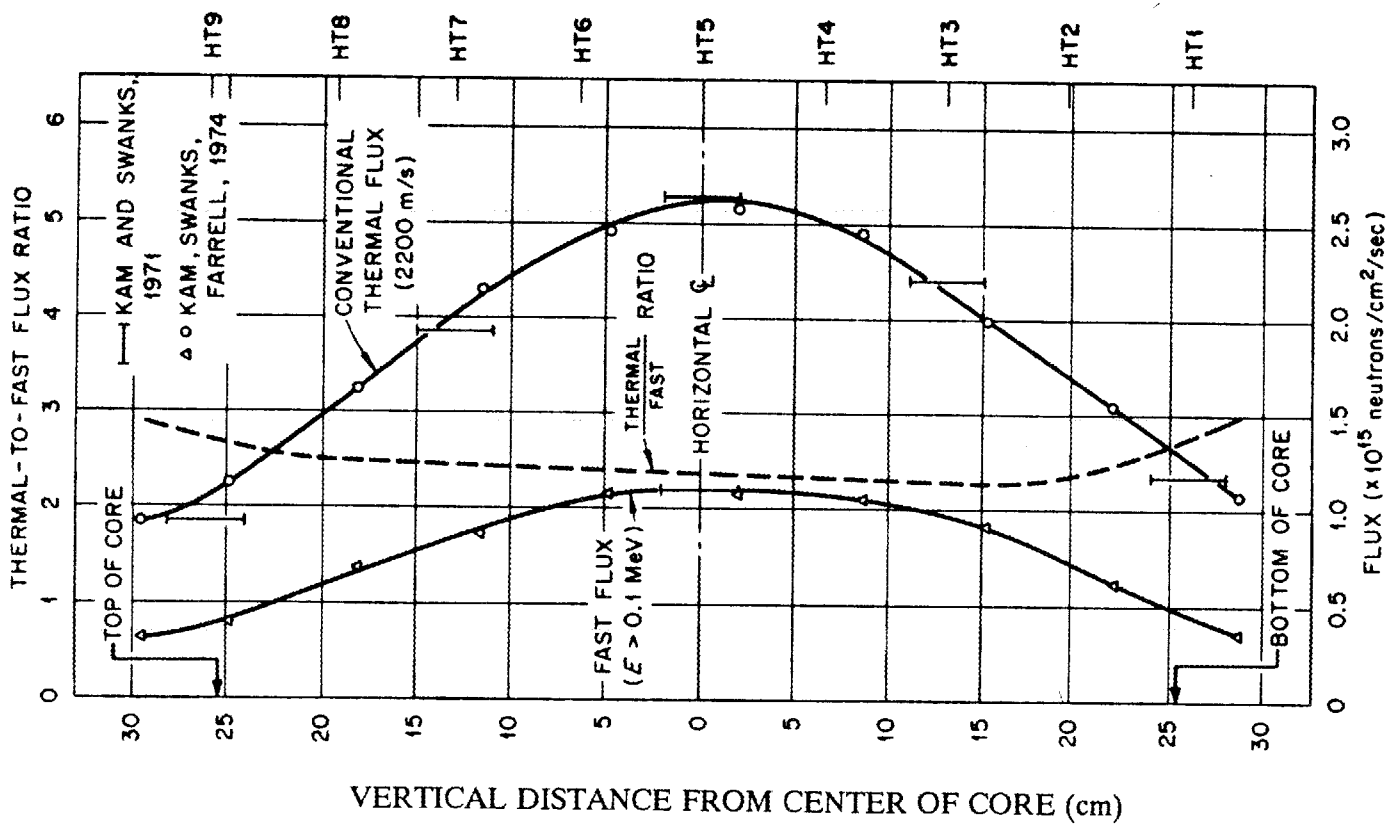

Figure 3.5.9. The absolute and relative thermal and fast neutron fluxes in HT array of HFIR (100 MW)

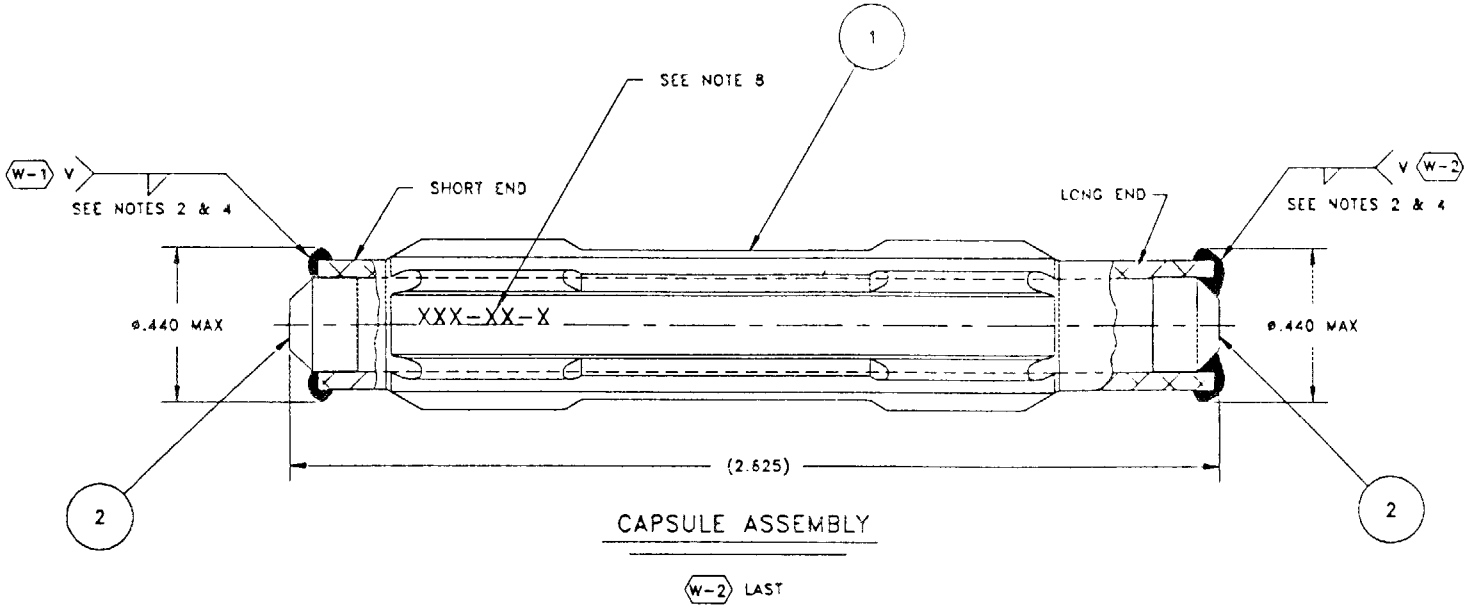

NOTES

1. EXTRUDED TUBE TO BE USED TO MAKE PART NO. 1 WILL BE FURNISHED BY THE REQUESTOR. EXTRUDED TUBE MATERIAL IS 6061-T6 AL.
2. WELDING SEQUENCE: MAKE WELD W-1 BEFORE LOADING
   MAKE WELD W-2 AFTER LOADING
   CAPSULE SHALL BE LOADED, WELDED, AND TESTED IN ACCORDANCE WITH NUCLEAR MEDICINE GROUP (NMG) PROCEDURE #51 OR EQUIV. PROCEDURE APPROVED BY THE RRD STAFF.
3. INDICATES FEATURES REQUIRING INSPECTION AND DOCUMENTATION PER RPD-JS-24.
4. INDICATES WELD INSPECTION NUMBER.
   WELD INSPECTION PER ORNL-NDE-21, "V"-VISUAL.
5. CLEAN WITH ACETONE FOLLOWED BY ALCOHOL PER RRD-JS-31.
6. MATERIAL SPECS. PER RRD-MS-52, SECTION 4.
7. LEAK TEST PER NMG PROCEDURE #52.
8. A UNIQUE IDENTIFICATION # IS TO BE INSCRIBED BY NMG PERSONNEL ON EA CAPSULE PER NMG PROCEDURE #49.
9. PACKAGE IN ZIP-LOCK BAG WITH A TAG SHOWING DRAWING NUMBER, DRAWING REVISION, PART NUMBER, AND IDENT NUMBER.

Figure 3.5.10. Design of HFIR Hydraulic Tube capsule

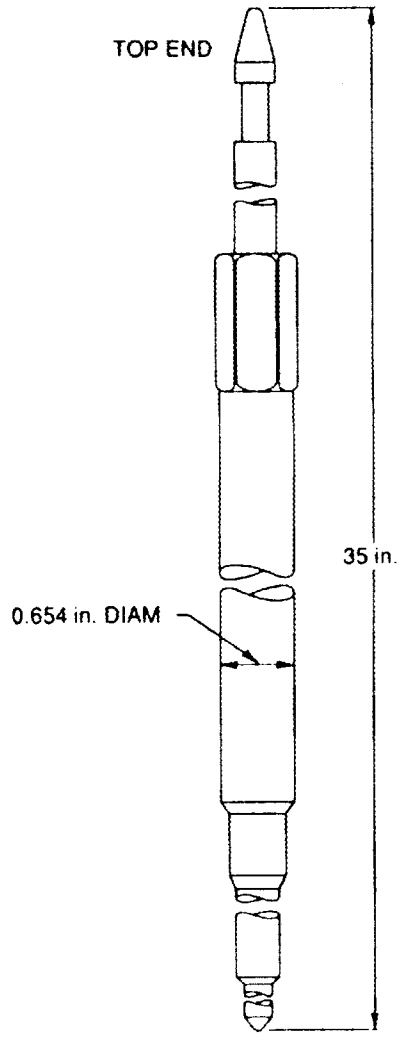

A) Target Position

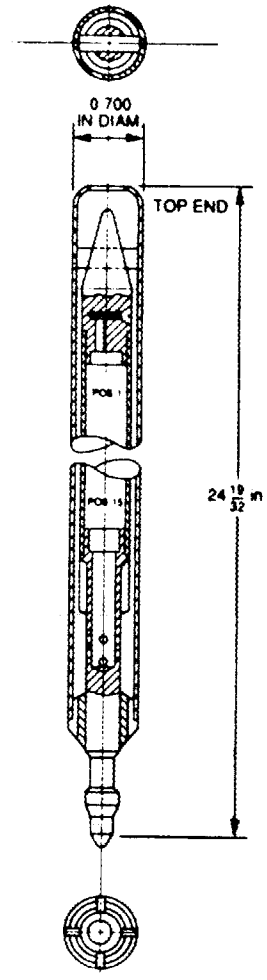

B) Peripheral Position

Figure 3.5.11. Design of HFIR Irradiation Capsules for the Target and Peripheral Positions

3.6.0. MASSACHUSETTS INSTITUTE OF TECHNOLOGY RESEARCH REACTOR--MITR-II

3.6.1. General
3.6.2. Reactor Description
3.6.3. Irradiation and Experimental Facilities
3.6.4. Operating Schedule
3.6.5. Supporting Services and Facilities
3.6.6. Administrative and Service Contacts

3.6.1. General

The Massachusetts Institute of Technology Research Reactor (MITR) has been serving the research, teaching, and radioisotope needs of Massachusetts Institute of Technology (M.I.T.) and the surrounding community since criticality was first achieved on July 21, 1958. The MITR-I was operated routinely on a three-shift schedule from July 1959 until May 1974, when it was shutdown for modification and overhaul which were completed in 1976. The MITR-II is now in routine three-shift operation.

The original construction was performed by ACF Industries, Inc., in 1956-58, based on a design by M.I.T. The MITR-II has the same 5 MW power level as its predecessor and is also an M.I.T. design. The principal change is the adoption of a compact core in order to improve the intensity and the thermalization of the beam tube fluxes in the D_2O moderator. The new core design also provides a relatively good capability for fast neutron irradiations in-core. These and other facilities for irradiation and experiment purposes enable the MITR to continue even more effectively its role in supporting the research and teaching programs of the many departments at M.I.T. including Nuclear Engineering, Physics, Metallurgy and Materials Sciences, Earth and Planetary Sciences, Nutrition and Food Science, and Chemical Engineering.

Since July 1976, the MITR has been part of a new interdepartmental laboratory, the Nuclear Reactor Laboratory. This change in the administration of the major facility is expected to facilitate the use of this facility by all M.I.T. departments and to provide a center for research related to the Reactor. Of particular interest to those outside the M.I.T. community is that the Institute welcomes and encourages use of the numerous, and in some cases unique, facilities by local industry, hospitals, and other universities.

The neutron and gamma fluxes of the MITR exceed those of most large research reactors found on university campuses and are comparable to all but a very few of the special reactors found in national laboratories. This makes possible a great variety of research activities, such as the following:

- Neutron and nuclear physics
- Reactor physics and engineering
- Cross-section measurements
- Solid-state studies based on neutron scattering
- Physics of neutron-capture process
- Activation analysis and radiochemistry
- Radiation-induced biological effects
- Research with short-lived radioisotopes
- Radiation-catalyzed chemical reactions
- Radiation effects (electronic, physical, and mechanical)
- Radiation therapy

Research in all of these areas has been, or is now being, carried out. In addition to the use of ports and other facilities for such activities, large quantities of radioisotopes are produced for medical applications and other purposes.

3.6.2. Reactor Description

The MITR-II is a tank-type reactor, having in fact two tanks. The inner tank is for the light water coolant-moderator, and the outer tank for the heavy water reflector. As may be seen in Figure 3.6.1, the fuel elements of fully-enriched (93%) uranium are positioned in a hexagonal core structure, 15" across, at the bottom of the core tank. Power is controlled by six shim blades and an automatic regulating rod. The two-foot-thick graphite reflector and most other features of the original MITR-I external to the core have been retained. The pressure in the system is nearly atmospheric, and the temperature just slightly over 100°F. An exterior shield of dense concrete makes it possible for research workers and students to conduct experiments and training with minimal radiation hazards.

3.6.3. Irradiation and Experimental Facilities

The arrangement of most of the experimental facilities of the MITR-II is shown in Figure 3.6.1 These facilities include:

1. **Horizontal Neutron Beam Ports**
2. **Thermal Column**

The 5'x5' thermal column conducts a stream of neutrons to special facilities (breeder blanket, cold neutron source, and positions for irradiation with fast or well-thermalized neutrons).

3. **Vertical Thimbles in the Graphite Reflector**

Vertical thimbles in the graphite reflector are of special design which permit insertion of samples into the core.

4. **In-core Vertical Thimbles**

5. **Horizontal-radial Vertical Beam Ports**

These facilities include a pneumatic rabbit facility.

6. **Medical Therapy Facility**

The Medical Therapy Facility located below the Reactor is a shielded surgical room for the use of neutron beams in medical therapy, in biomedical research, and in other experiments requiring a minimum of gamma radiation and/or large volumes.

The facilities which are most useful for radioisotope production are the in-core vertical thimble, the horizontal-radial beam ports 6RH1 and 6RH2, which include the pneumatic rabbit facility - 2PH1, and the vertical thimbles in the graphite reflector, 3GV1-6. The first two provide high fluxes of fast, epithermal, as well as thermal neutrons. The third, the 3GV facilities, provide primarily thermal neutrons. A summary of neutron fluxes and other basic information regarding these three irradiation facilities is given in Tables 3.6.1 to 3.6.3. In these facilities one or several samples may be irradiated for the desired time. The user usually furnishes the sample materials in a suitable inner irradiation container and also an approved carrying or shipping container for transportation of the radioactive products. If necessary, a few such containers are available for short-term loans at a nominal charge. When items require instrumentation, controlled atmospheres, temperature regulation, etc., during irradiation, a reasonable amount of space for this equipment is included in the irradiation charge. Gamma irradiations may be carried out either in the reactor or in the spent fuel storage tank. Irradiation by charged particles is also possible by means of appropriate nuclear reactions such as (n,p) and (n,α).

3.6.4. Operating Schedule

Currently, the MITR-II operates 24 hours per day with three shifts for 90-100 hours per week, normally shutting down on weekends. Scheduling of irradiations can generally be timed to suit the convenience of the experimenter.

3.6.5. Supporting Services and Facilities

Utilization of the M.I.T. Reactor may be classified into two general categories, each of which is effectively supported as needed by a broad range of services and facilities. Various research projects are continually in progress at the MITR. Such work is customarily supported by contracts or grants, and these may be submitted and administered either by the Nuclear Reactor Laboratory or by other departments/programs of M.I.T. A limited amount of funding is usually available to help defray the costs of utilization by M.I.T. and non-M.I.T. researchers who do not have financial support for this purpose.

Reactor users may benefit from a variety of excellent services and facilities available in the Nuclear Reactor Laboratory. It is the purpose of the professional and technical staff to provide all necessary assistance to participants, whether associated with the Institute or not. Such aid would extend to use of other M.I.T. facilities as well, such as the computers, research equipment, stockrooms, etc. Within the Nuclear Laboratory is a professionally staffed trace analysis laboratory for instrumental and/or radiochemical activation analysis. The facilities also include a well-equipped machine, electronics and welding shops, local stockrooms, a hot cell, a low-level counting room, and a health physics laboratory.

While the Reactor is used primarily to serve the research and teaching needs of M.I.T., the Institute recognizes an obligation to help meet the requirements of industry, hospitals, and other universities in the area, and welcomes the opportunity to do so. Charges

are made to help defray costs of salaries and wages for the 25-person staff, and of supplies, insurance, and other expenses for operating the reactor. Potential users should contact the Nuclear Reactor Laboratory Headquarters Office (see address in Section 3.6.6) well in advance of the intended irradiation date. The following must be submitted in all cases:

(a) "M.I.T. Reactor Irradiation Request" giving details of the intended irradiation.

(b) An M.I.T. Radioisotope Procurement Reference Number, or a copy of the user's Byproduct Material License (Form NRC374) from the user, showing NRC authorization to receive the amount of radioactivity requested.

(c) An M.I.T. Requisition to cover the estimated costs, or a company purchase order for the same purpose.

3.6.6. Administrative and Service Contacts

Otto K. Harling, Director
MIT Nuclear Reactor Laboratory
138 Albany St.
Cambridge, Massachusetts 02139.

(617) 253-4201
FAX (617) 253-7300

Potential users should contact the Nuclear Reactor Laboratory Headquarters Office at the address below for additional information.

Nuclear Reactor Laboratory, M.I.T.
Attention: Headquarters Office
138 Albany St.
Cambridge, Massachusetts 02139.

(617) 253-4199

Table 3.6.1. MITR In-Core Vertical Thimbles

Neutron Flux:

Thermal	2-3 x 10^{13} $n.cm^{-2}.s^{-1}$
Fast (E > 1 MeV)	~ 10^{13} $n.cm^{-2}.s^{-1}$
Epithermal (0.4 ev -5 keV)	3 x 10^{13} $n.cm^{-2}.s^{-1}$

Target Dimensions:

Up to ~2" diameter x 24" long.

Target Handling Systems:

At present, insertion and removal are done manually with the reactor shutdown. Remote movement with the reactor operating could be designed for some specimens providing they meet the safety requirements.

A 2-bay hot cell and a cask for transferring specimens from the reactor top area is available on the main reactor floor.

Target Requirements:

Cooling needs to be provided for up to 2.4 w/g. Heat may be removed with the core cooling water by conduction through the thimble wall.

Irradiation Periods:

Maximum - no limit up to ~1 year.
Minimum - a practical limit of a few days because reactor shutdown is required to remove the specimen. Automated handling could be designed for shorter irradiation periods.

Costs:

Our facility costs are based on a one time usage primarily. Costs for extended or routine use of a facility are negotiable.

Table 3.6.2. Horizontal-Radial Beam Ports (6RH1* and 6RH2) including Pneumatic Rabbit Facility (2PH1)* at the MITR

Neutron Flux:

Thermal	3-6 x 10^{13} $n.cm^{-2}.s^{-1}$
Epithermal (Gold Measurement)	1.5 x 10^{11} $n.cm^{-2}.s^{-1}$
Epithermal Gold-Cd ratio	15-33
Fast (E > 1 MeV)	3.3 x 10^{12} $n.cm^{-2}.s^{-1}$

The fluxes in 6RH2 and 2PH1 are comparable.

Target Dimensions:

Pneumatic rabbit (2PH1) 1.3" O.D. x 6" long
Beam Port - 6RH2 2" O.D. x 6" long

Target Handling Systems:

Pneumatic Rabbit - Samples inserted and removed by a fast (~1 second) pneumatic system. The samples eject into a hot cell with a maximum capacity of a few curies. Remote handling for repackaging and loading into a cask is provided.

Beam Port - 6RH2 - No handling facilities are installed. Space is available externally for a shielded handling facility.

Target Requirements:

Cooling needs to be provided for approximately 1 Watt/gm. The Pneumatic Rabbit is limited to a sample mass of ~30 gm maximum.

Irradiation Periods:

Maximum - the pneumatic rabbit requires that the sample be ejected and the polyethylene rabbit changed every 8 hours, otherwise no limit. A metal rabbit could be used which would not require replacement.

Minimum - a few seconds for the pneumatic rabbit. An irradiation period of less than ~5 s would have a relatively larger uncertainty.

Costs:

The irradiation costs for the pneumatic rabbit are $30/hour with a 6 hour minimum and a handling charge of $60 for the first rabbit, $40 for the second, and $20 for subsequent ones. No costs for the 6RH2 facility have been developed and would depend on use.

---

*Note that the Pneumatic Rabbit Facility 2PH1 is installed in the 6RH1 Beam Port. This precludes other irradiations in 6RH1.

Table 3.6.3. Vertical Thimbles in Graphite Reflector (3GV2, 4, 5 and 6) at the MITR

Neutron Flux:

Thermal		4-8 x 10^{12} $n.cm^{-2}.s^{-1}$
Epithermal (cobalt measurement)		7 x 10^{10} $n.cm^{-2}.s^{-1}$
Epithermal	Au-Cd ratio	220

Target Dimensions:

Maximum	3.25" O.D. x 30" long (without cooling jacket)
	2.75" O.D. x 30" long (cooling jacket installed)

Target Handling Systems:

Manual insertion and removal at present
Automatic changing could be accommodated

Target Requirements:

Four of the 3GV facilities have a water cooled jacket with cooling temperatures ~50°C. However, cooling jackets may be removed for larger irradiation volumes.

The 3GV facilities without cooling may have temperatures of 100-200°C.

Irradiation Periods:

Maximum - Polyethylene vial limit ~48 hours. No limit if in metal container.
Minimum - ~one min with manual handling. Removal only with reactor shutdown.

Costs:

The irradiation costs for the vertical thimbles (3GV) are $300/day with a half day minimum for the facility and $180 for each sample insertion and removal.

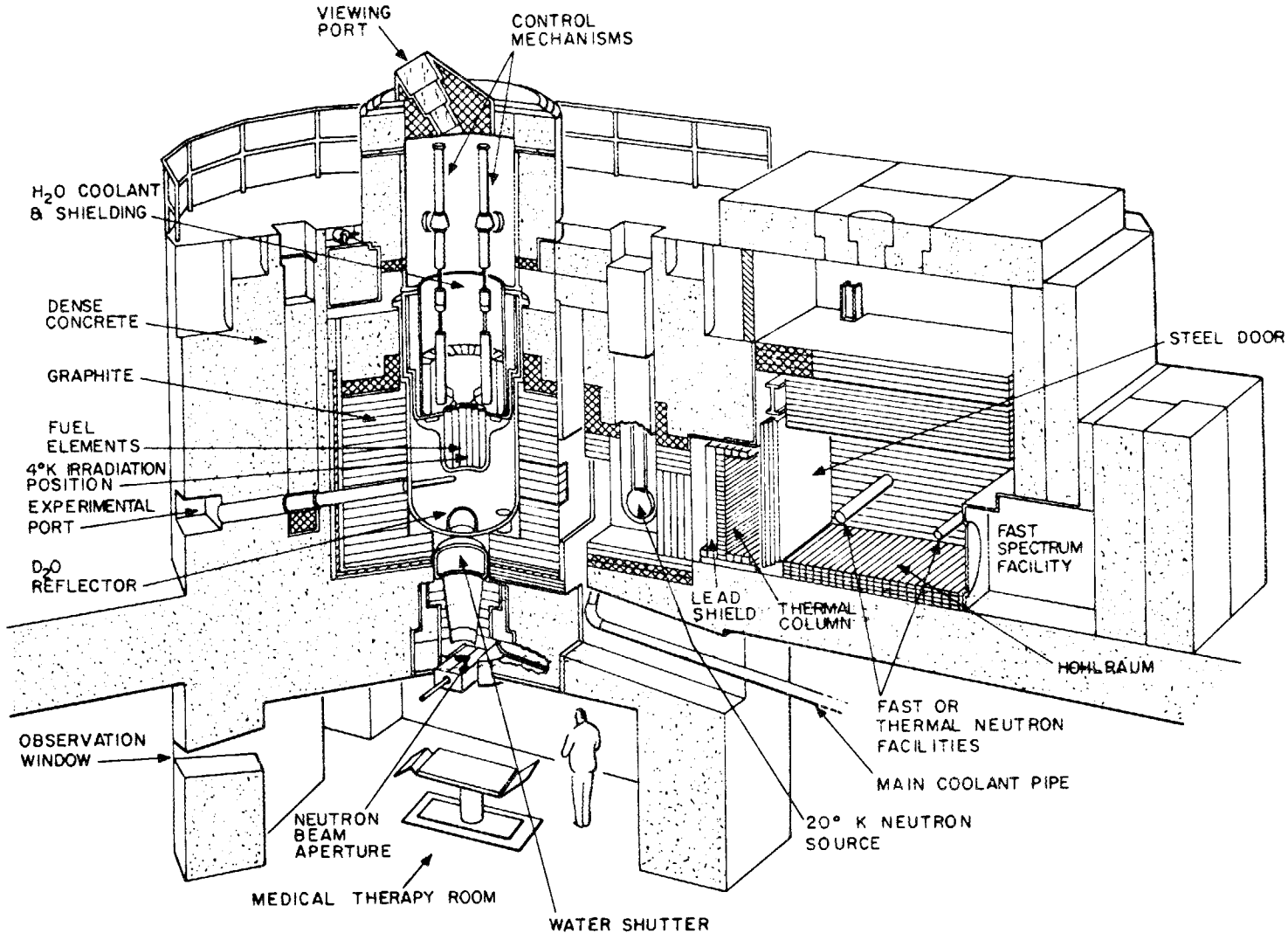

Figure 3.6.1. View of M.I.T. research reactor, MIRT-II, showing major components and experimental facilities

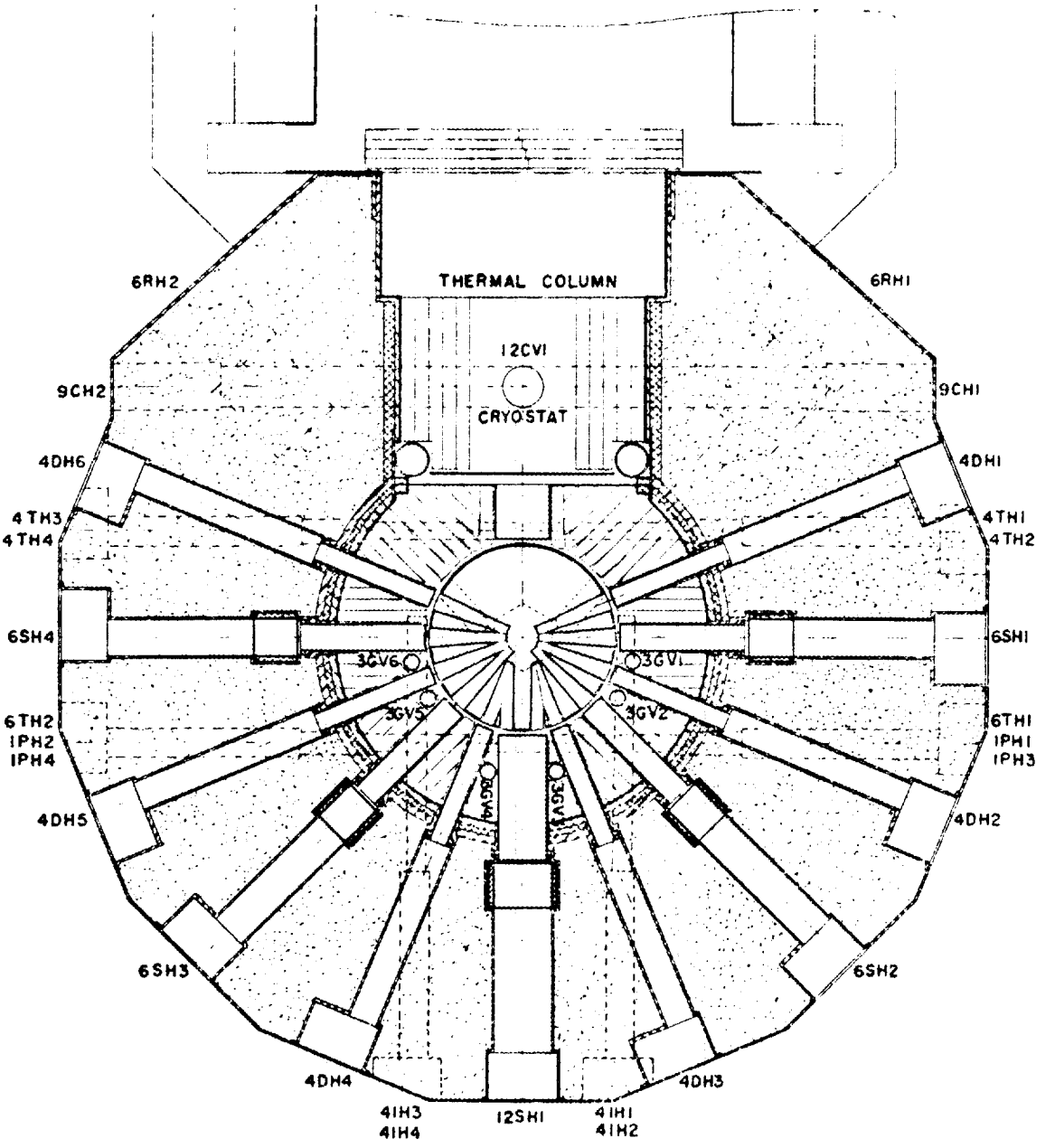

Figure 3.6.2: Expanded view of the horizontal cross-section of the MIRT-II

3.7.0. MISSOURI UNIVERSITY RESEARCH REACTOR -- MURR-II

3.7.1. General
3.7.2. Description of Reactor
3.7.3. Irradiation and Experimental Facilities
3.7.4. Operating Schedule
3.7.5. Supporting Services and Facilities
3.5.6. Administrative and Service Contacts

3.7.1. General

The University of Missouri Research Reactor (MURR) is the highest power, highest neutron flux reactor at a university in the United States. The reactor is a light water moderated, flux trap design with 10 MW at peak power. The facility is operated by the University of Missouri for the four campus system and is located in the University Research Park in Columbia, Missouri. The reactor was licensed by the Atomic Energy Commission on October 11, 1963. Criticality was attained on October 13, 1966, and a power level of 5 MW was attained on June 30, 1967. The present licensed power level of 10 MW was attained on July 18, 1974.

The University of Missouri-Columbia Research Reactor Facility is a service facility. Services are available to all that have the need in the following priority:

- University of Missouri
- Other Missouri educational institutions
- Out-of-state educational institutions
- Federal and state agencies
- Out-of-state industry

The Facility is supported by the people of the state of Missouri and the federal government. In addition, some operating expenses are offset by service provided to industry.

3.7.2. Reactor Description

The reactor core is a cylindrical annulus having an inside diameter of approximately 150 mm, an outside diameter of 300 mm and an active fuel height of 600 mm, Figure 3.7.1. The core is fueled with eight plate-type fuel elements containing 6.2 Kg of fully enriched U-235. This annulus of fuel is enclosed in the reactor pressure vessel and water-cooled by forced circulation.

The reactor is reflector-controlled by four boron-aluminum shim blades and one stainless steel regulating blade forming a segmented cylinder between the core and beryllium reflector. The reactor reflector consists of a 70 mm thick beryllium cylinder followed by 230 mm of graphite. The reactor pressure vessel and reflector assembly are situated near the bottom of a 9 meter deep by 3 meter diameter pool of demineralized light water. The pool is lined with aluminum and surrounded by a heavy aggregate concrete biological shield. The reactor facility is housed in a dual purpose building having in excess of 4,700 square meters of floor space. One section contains the reactor and its equipment areas, and the other section houses the administrative offices, shops, laboratories, and laboratory associated facilities.

3.7.3. Irradiation and Experimental Facilities

The reactor core and reflector experimental facilities include three 152 mm and three 101 mm diameter beam tubes, numerous graphite reflector irradiation positions, pneumatic tube systems, and the flux trap as shown in Figure 3.7.2. There are two main regions where samples are irradiated for radioisotope production. There is a reflector region that is

accessible at any time for inserting or removing samples. The flux in this region varies from about $1x10^{12}$ to $1x10^{14}$ $n.cm^{-2}.s^{-1}$. There is also a flux trap region that is accessible once a week for inserting or removing samples during the scheduled refueling shutdown. The flux in this region varies from about $1x10^{14}$ to $4.5x10^{14}$ $n.cm^{-2}.s^{-1}$. A summary of thermal neutron fluxes at various irradiation facilities of MURR is given in Table 3.7.1. The information regarding the size of samples and dimension of irradiation capsules is also given in the above table.

3.7.4. Operating Schedule

The reactor operates 24 hours per day with a scheduled shutdown once a week for refueling and maintenance. It operates at 10 MW an average of 150 hours per week. Flux trap samples may be inserted or removed only on Mondays. Reflector and bulk pool samples may be inserted or removed at any time. All sample positions require advanced reservations.

3.7.5. Supporting Services and Facilities

Other reactor associated facilities available for experimental use are a thermal column, the bulk pool, a thermal neutron radiographic facility, and a spent-fuel gamma-irradiation facility.

The following lists the facilities available and the cost associated with the service. These provide a general guide only. Users should request a firm price for services for any specific project.

Costs for reactor services are generally based upon the amount of space, time,and service position used. The cost for small sample irradiation service will generally be based upon the number of irradiation units (I.U.) used.

$$I.U. = \phi \times V \times T \times (10^{-14})$$

where ϕ = unperturbed thermal neutron flux in units of neutron/cm^2·sec

V = volume of experiment in cubic inches

T = Irradiation time in hours

The current I.U. cost is $0.716 per I.U. Most irradiations are made in standardized containers and the cost per unit of fluence are given in Table 3.7.2.

Other Services

Continuous Irradiations for Isotopes with Half-Lives less than 72 Hours

Neutron charges for continuous back-to-back short-lived (<72 hours) irradiations totalling six (6) hours or less shall be $175. Irradiation time over six (6) hours shall be $10 per hour rounded to the next highest hour. All other charges shall be per the normal charge schedule.

Special Isotopes

Sodium-24 for power plant testing is $5,000 per shipment.

Sulfur-35 is $42.48 per Curie calibrated at reactor discharge.

Phosphorus-32 is $60.82 per Curie calibrated at reactor discharge.

Copper-64 (including production and separation) is $263 per mCi delivered.

Copper-64 (including only production) is $57 per mCi delivered (25 mCi minimum).

Copper-67 (including production and separation) is $2800 per mCi delivered (0.5 mCi minimum).

Shipping

Small disposable DOT 7A container is $27 each (36 x 40 x 35 cm).

Large disposable DOT 7A container is $60 each (62 cm^3).

Disposable 2" lead shield is $38 each.

Use of DOT-6M is $65 each.

Rental of uranium shipping cask is $150 for the first 3 weeks and $55 for each subsequent week.

Rental of tungsten insert is $50 for the first 3 weeks, and $35 for each subsequent week.

Encapsulation Charge

A charge of $60 is made for each standard irradiation capsule which requires welding and leak testing. The cost for special encapsulations will be determined for each special case.

Handling Charge

A handling charge of $65 is made for each shipment or release of samples.

Machine Shop, Electronics Shop and Health Physics

Labor charges are $30 per man-hour, and materials are cost plus 10%.

Reactor Shutdown

A charge of $500 will be made for each unscheduled shutdown for sample removal.

Bulk Pool Irradiations

Bulk pool experiments are practically unlimited in size up to dimensions of 20" x 36" x 36". The available flux and cost will be furnished on request and is based upon the proposed irradiation experiment. The minimum irradiation cost is $1.50 per hour and the maximum flux is 1.0×10^{13} $n.cm^{-2}.s^{-1}$.

3.5.6. Administrative and Service Contacts

Paul D. Miller, Reactor Services Project Specialist
Research Reactor Facility
University of Missouri
Columbia, Missouri 65211

(314) 882-5220
FAX (314) 882-3443

Table 3.7.1. Thermal Neutron Fluxes and Sample Dimensions at Various Irradiation Facilities at MURR-II

Position	Max. Can Dimension, (in) Dia.	Max. Can Dimension, (in) Length	Max. Sample Dimension, (in) Dia.	Max. Sample Dimension, (in) Length	Max. Neutron Flux ($n.cm^{-2}sec^{-1}$)
Flux Trap	1.125	2.00	1.00	1.75	$1.0x10^{14}$-$4.5x10^{14}$
		3.00		2.75	
		4.00		3.75	
	0.400	1.25	7 mm	1.00	
		2.50	7 mm	2.25	
Row 1	1.125	2.00	1.00	1.75	$8.0x10^{13}$
		3.00		2.75	
		4.00		3.75	
Row 2	2.350	5.00	2.00	4.75	$5.0x10^{13}$
		10.0		9.75	
	1.125	4.00	1.00	3.75	
Row 3	3.350	5.00	3.00	4.75	$2.5x10^{13}$
		10.0		9.75	
Row 4	4.35	5.00	4.00	4.75	$6.0x10^{13}$
		10.0		9.75	
Row 5	5.35	5.00	5.00	4.75	$1.0x10^{13}$
		10.0		9.75	

Table 3.7.2. MURR, NAP Charge Schedule: 1-Jul-89 to 30-Jun-90*

Sample can diameter	Dollars per inch per unit of $1x10^{17}$ $n.cm^{-2}$
0.400"	$0.025
1.125"	$0.198
1.350"	$0.285
2.350"	$0.863
3.350"	$1.750
4.350"	$2.950
5.350"	$4.470

*The minimum irradiation charge for the flux trap, reflector, or bulk pool positions will be $175.00. Charges for service work including handling will be additional.

Table 3.7.3. MURR, NAP Charge Schedule: 1-Jul-89 through 30-Jun-90

Charges for Pneumatic-tube Irradiations

	Cost per single irradiation, $	
Irradiation Period, s	UM/Federal	General/Industry
1 to 60 sec	10	20
61 to 600 sec	20	40
601 to 3600 sec	40	80

Charges for Neutron Activation Analysis

No. of Samples	Cost per Sample, $	Total, $
a) Full multi-element INAA: (combined short & long irradiations)		
1-10		
10-24	350	700
25-49	250	500
50-99	200	400

Table 3.7.3.(cont.) NAP Charge Schedule: 1-Jul-89 through 30-Jun-90

No. of Samples	Cost per Sample, $	Total, $
b) Partial multi-element INAA: (by long irradiation)		
10-24	250	500
25-49	175	350
50-99	120	240
c) Partial multi-element INAA: (by short irradiation)		
10-24	150	300
25-49	125	250
50-99	100	200
Single element INAA/RNAA	by quotation	

Charges for Multi-Elemental Analysis of Silicon by Long INAA

No. of Samples	Cost per Sample, $	Total, $
Fewer than 5	charged as 5	1700
5	340	1700
6	305	1830
7	285	1995
8	275	2200
9	265	2385
10	250	2500
N	250/each	N x 250

Note: An extra charge of $75 per sample is made for those experiments requiring double counting (i.e., counting before and after an etch).

Charges for Boron Analysis in BPSG Films

No. of Samples	Cost per Sample, $
1 through 6	900 (charged as 6 samples)
7 through 20	135
21 or greater	125

Charges for Labor, Equipment & Supplies

Technical assistance	20/hr
Laboratory usage	50/day
Ge detector/changer	60/day
NaI detector	25/day
Expendable supplies (includes ordering, cleaning, etc.)	cost + 20%

Note: The charges listed above are given as a general guide only. Actual charges per sample will depend on the number of samples submitted, suite of elements to be measured and requested response time.

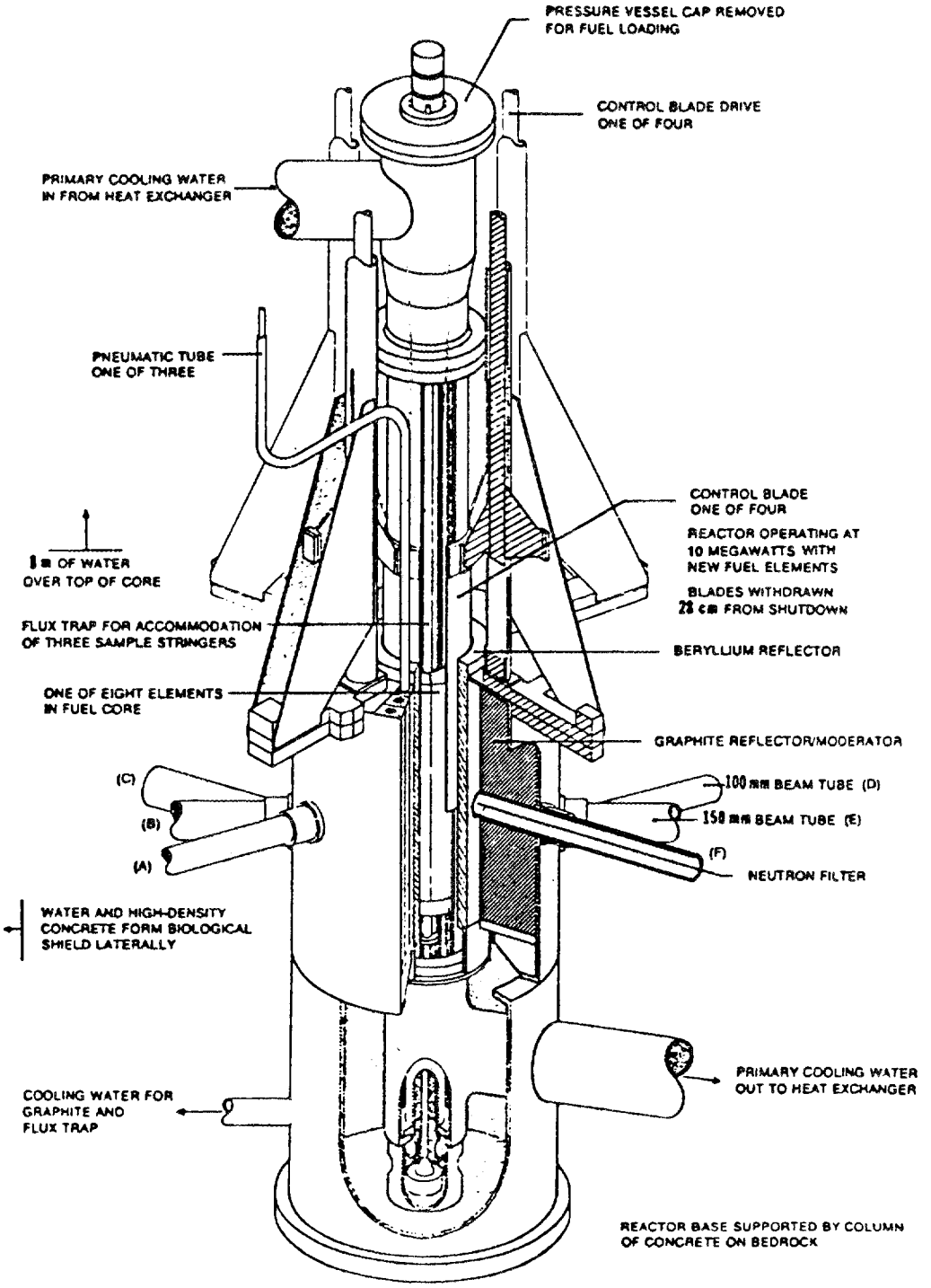

Figure 3.7.1. View of University of Missouri Research Reactor, MURR

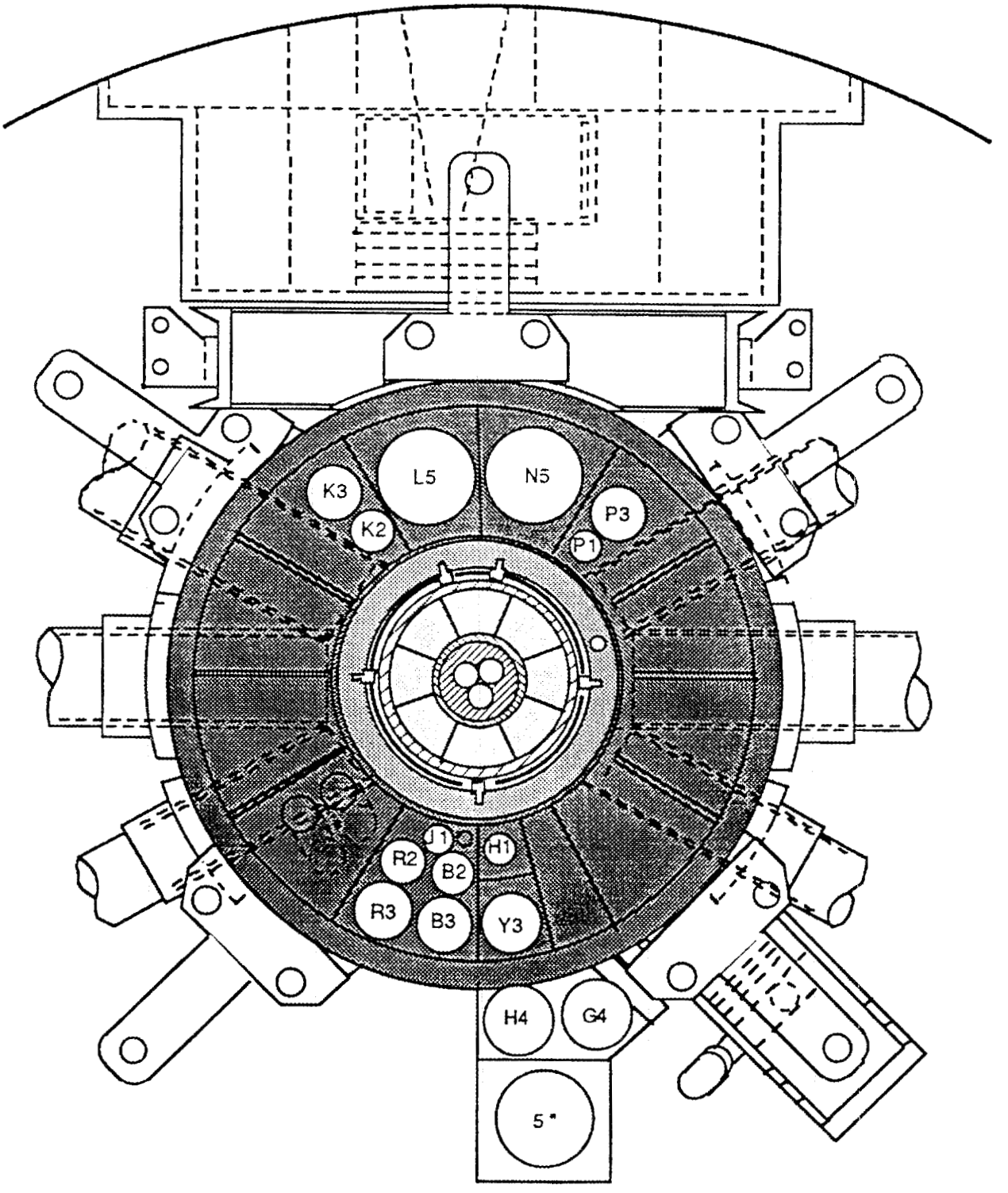

Figure 3.7.2. Horizontal cross-section of MURR, showing various irradiation facilities

3.8.0. OREGON STATE UNIVERSITY TRIGA REACTOR – OSTR

3.8.1. General
3.8.2. Description of Reactor
3.8.3. Irradiation and Experimental Facilities
3.8.4. Operating Schedule
3.8.5. Supporting Services and Facilities
3.8.5.1. Instructional Capabilities
3.8.5.2. Research Capabilities
3.8.5.3. General Limitations and Safety Requirements
3.8.6. Administrative and Services Contact

3.8.1 General

The initial construction of the OSU Radiation Center was completed in June 1964 consisting of 32,397 square feet of office and laboratory space. The second phase of the facility was completed in March 1967 and consisted of the TRIGA nuclear research reactor housed in a 9,956 square foot building adjacent to the existing Radiation Center. Currently, the OSTR is licensed by the U.S. Nuclear Regulatory Commission to operate at a maximum steady state power of 1 MW, and can also be pulsed up to a peak power of about 3,000 MW. In 1975, additional space for teaching, computing, and offices totaling 1,600 square feet was added to accommodate the rapidly expanding nuclear engineering program, and in 1977 similar additional facilities equaling another 1,600 square feet were added. The Radiation center complex at present totals 45,553 square feet.

The Radiation Center is a unique institutional facility which serves the entire OSU Campus as well as other universities in Oregon and throughout the nation. The center provides permanent office and laboratory space for the OSU Department of Nuclear Engineering, the OSU Radiation Safety Committee, and for the OSU nuclear chemistry, radiation chemistry, and geo- and cosmochemistry programs. There is no other university

facility with the combined capabilities of the OSU Radiation Center in the western half of the United States. In addition to the 1 MW TRIGA research reactor with pulsing capability, the center is currently equipped with a great variety of instruments for radiation measurements and nuclear studies, including state-of-the-art multichannel analyzers with associated Ge(Li) detectors and a Compton suppression detector system, an instrument calibration facility for radiation protection instrumentation, an X-ray facility, a ^{60}Co irradiator, major computer facilities, and a high speed (20,000 frames per second) neutron radiography facility. The Center is also equipped to package radioactive materials for transportation to both national and international destinations.

3.8.2. Reactor Description

The Oregon State University TRIGA Reactor (OSTR) is a water-cooled, swimming pool type of reactor which uses uranium/zirconium hydride fuel elements in a circular grid array. The reactor core is surrounded by a ring of graphite which serves to reflect neutrons back into the core. The core is situated near the bottom of a 22-foot-deep water-filled tank, and the tank is surrounded by a concrete monolith which acts as a radiation shield and structural support (Figures 3.8.1 - 3.8.3). The beam ports are tubular penetrations into the main concrete shield of the reactor which enable neutron and gamma radiation to stream from the core when the beam port shield plugs are removed. Two of the OSTR's beam ports are permanently configured for neutron radiography, while the other two may be used for a variety of experiments.

3.8.3. Irradiation and Experimental Facilities

The OSTR has a number of different irradiation facilities including a pneumatic

transfer tube, a rotating rack, a thermal column, four beam ports, a cadmium-lined in-core irradiation tube, and sample-holding (dummy) fuel elements for special in-core irradiations. The pneumatic transfer facility enables samples to be inserted and removed from the core in a few seconds. Consequently, this facility is normally used for neutron activation analysis involving short-lived radionuclides. On the other hand, the rotating rack is used for much longer irradiation of samples (e.g., hours). The rotating rack consists of a circular array of 40 tubular positions, each of which can hold two sample tubes. The rotation of the rack ensures that each sample will receive the same amount of irradiation.

The thermal column of the reactor consists of a large stack of graphite blocks which slow down neutrons from the reactor core in order to increase thermal neutron activation of samples. Graphite blocks are removed from the thermal column to enable samples to be positioned within for irradiation. For samples that would best be irradiated by neutrons with energies greater than about 0.4 to 0.5 ev, a cadmium-lined in-core irradiation tube is available. This tube is placed into one of the inner grid positions of the core which is normally occupied by a fuel element. If samples to be irradiated require large neutron fluxes, especially fluxes involving higher energy neutrons, then such samples may be inserted into a dummy fuel element. This device is then placed into one of the inner grid positions normally occupied by a fuel element.

Table 3.8.1 and 3.8.2 give neutron flux values at 1 MW for the principal irradiation facilities, while Table 3.8.3 gives the usable dimensions of these facilities. If experiments do not fit within the sizes given, investigators are encouraged to discuss various alternatives with the OSTR staff. In assessing the available space, consideration should also be given to the encapsulation requirements which are addressed in Section 3.8.5.3 entitled "General Limitations and Safety Requirements." Two-dram polyvials are often used by investigators

as the primary encapsulation. The volume inside a two-dram vial is 7 cm^3 with an O.D. 0.60"x2.15" (dia. x length). The encapsulated sample in turn is placed in a TRIGA tube or a pneumatic transfer tube (Table 3.8.3).

The methods of encapsulation detailed in the Table 3.8.4 has been found by testing and experience to provide satisfactory containment for the specified sample forms and for the radionuclides produced in samples irradiated in the OSTR. Specified containments are applicable only to the physical forms of materials shown in the table. All polyethylene vials and all Nalgene liquid scintillation bags must be heat-sealed, and all other vials must be sealed according to the specifications given in the table. Various other methods of encapsulation may also be suitable. However, before other methods may be used by investigators they must be approved by the OSTR Reactor Supervisor and the Senior Health Physicist. This approval will be based on actual testing or close similarity to previously approved encapsulation methods found to be satisfactory. The Reactor Supervisor will maintain records of tests or other evaluations when such methods are used to determine the containment capability and/or general suitability of encapsulations. The approval of encapsulations by the Reactor Supervisor and the Senior Health Physicist will be documented by their signatures on the applicable Irradiation Request.

3.8.4. Operating Schedule

The reactor normally operates on a one shift per day basis for 7 hours per day, but longer running times can be arranged.

3.8.5. Supporting Services and Facilities

The Radiation Center is prepared and equipped to carry out the following:

- Accommodate all types of internal and off-campus instructional programs involving nuclear science, nuclear engineering, nuclear and radiation chemistry, radiation protection and related areas. (Approximately 30 different OSU classes are accommodated during a typical academic year).
- Support research, development, and service programs involving nuclear science and engineering, radiation protection, and related disciplines.
- Provide a place especially designed for the use and handling of radioisotopes and other sources of ionizing radiation.
- Provide a variety of sources of ionizing radiation including fast and thermal neutrons, beta, X-rays, and gamma radiation.
- Perform instrumental and radiochemical neutron activation analysis.[1]
- Produce a wide variety of radioisotopes.[1]
- Conduct neutron radiography and neutron diffraction.
- Perform special irradiations involving X-rays, gamma-rays, and neutrons.
- Perform special measurements of radiation and/or radioactive materials.
- Calibrate a wide variety of nuclear instrumentation and radiation survey equipment used in radiation protection.
- Perform certain types of bioassays to determine human uptake of radioactivity.

---

[1]During a normal year, approximately 5000 samples are irradiated in the OSU TRIGA reactor in support of teaching, research, and service programs in these areas.

- Perform special measurements to assess radioactivity in the environment. (During the Chernobyl accident, the Radiation Center performed about 130 special environmental measurements of grass, milk, air, water, etc., and provided this information to federal and state agencies as well as to the local and national news media).
- Provide packaging of radioactive materials for transportation to both national and international destinations.
- Provide emergency response training and personnel to respond to accidents involving radioactive materials. (Over the past several years, the Radiation Center has assisted the Oregon Department of Energy in training over 1000 emergency response personnel throughout the state of Oregon).
- Provide consultation on research applications of radiation and radioactive materials and accommodate exploratory programs of this type.
- Provide tours and public instructional programs involving radiation and radioactive materials. Each year the Center hosts between 600 and 1,000 visitors plus numerous special tours. The two main uses of the OSTR are for instruction and research.

3.8.5.1. Instructional Capabilities

Instructional use of the reactor is largely twofold. First, it is used significantly for classes in nuclear engineering, radiation protection, and chemistry at both the graduate and undergraduate levels to demonstrate numerous principles which have been presented in the classroom. Basic neutron behavior is the same in small reactors as it is in large power reactors, and many demonstrations and instructional experiments can be performed using the OSTR which cannot be performed with a commercial power reactor. The reactor is also available for shorter-term demonstration experiments for graduate and undergraduate students

in areas such as physics, chemistry, and biology, as well as for visitors from other universities and colleges, from high schools, and from public groups. The second instructional capability of the OSTR involves education of reactor operators, operations managers, and radiation health physicists.

3.8.5.2. Research Capabilities

The OSTR is a unique and valuable tool for a wide variety of research applications, and serves as an excellent source of neutrons and/or gamma radiation. The most popular experimental technique requiring reactor use is neutron activation analysis (NAA). This is a particularly sensitive method of elemental analysis. The OSTR's irradiation facilities provide a wide range of neutron flux levels and neutron flux qualities, which are sufficient to meet the needs of most researchers (See Tables 3.8.1 and 3.8.2). This is true not only for NAA, but also for other experimental techniques such as fission track dating of geological and anthropological materials. To assist potential users of the OSTR, Tables 3.8.3 and 3.8.4 outline important considerations for experiments using the reactor, including sample encapsulation requirements.

Analytical Equipment

The Radiation Center has a great variety of equipment for analyzing radiation and radioactive materials. Much of this equipment is state-of-the-art radiation counting technology. Twelve gamma ray spectrometers with their associated computers and Ge(Li) or intrinsic germanium detectors are available. Much additional equipment for use in the classroom and an extensive inventory of portable radiation monitoring instrumentation are also available.

Radioisotope Irradiation Sources

The Radiation Center is equipped with a cobalt-60 gamma irradiation facility which is capable of delivering high doses of gamma radiation to a wide variety of materials. Typically, the irradiator is used by researchers wishing to perform mutation and other biological effects studies, studies in the area of radiation chemistry, radiation dosimeter testing, sterilization of food materials, soils, sediments, and other media, gamma radiation damage studies, and other such applications. In addition to the cobalt-60 irradiator, the Center is also equipped with a variety of smaller sealed radiation sources of various curie levels which are available for use.

3.8.5.3. General Limitations and Safety Requirements

The following general limitations and restrictions apply to all approved experiments involving use of the OSU TRIGA reactor. The description of a specific experiment may include additional limitations and more severe restrictions than those enlisted here. **The investigator is obligated to be familiar with and comply with all limitations on a given experiment in addition to these general limitations.** Any variations from these limitations on experiments must be approved by the Reactor Operations Committee, including the Reactor Supervisor and the Senior Health Physicist.

Irradiation Request Limitations

1. All individual items or samples to be irradiated shall be clearly and accurately listed on the Irradiation Request (IR).
2. No items or samples can be irradiated unless they are listed on the Irradiation Request.

3. No changes can be made to an IR after one or more of the required approval signatures has been obtained.

4. All major radionuclides to be produced as a result of the irradiation must be listed on the IR even though they may be of no importance to the investigators's project.

License Limitations

1. The radionuclides and quantities to be produced for ultimate release must not exceed the types and amounts authorized to the investigators on an applicable license.
2. The steady state power level of the reactor may not exceed 1000 kW (thermal).
3. The reactivity worth inserted for pulse operation will not exceed $2.55.
4. In-core experiments cannot occupy more than a single fuel element position.
5. The reactor cannot be operated at power levels exceeding 1 kW with a core lattice position vacant, except for positions on the periphery of the core assembly.
6. Non-secured experiments shall have reactivity worth less than $1.00.
7. The reactivity worth of any single experiment will be less than $2.55.
8. The total reactivity worth of all experiments will not exceed $3.00.
9. Explosive materials in quantities greater than 25 mg shall not be irradiated. [EXCEPTION: Explosive materials not exceeding 0.014 lbs. equivalent of TNT may be irradiated at the end of beam port #3].
10. Explosive materials in quantities less than 25 mg may be irradiated provided the pressure produced upon detonation of the explosive has been calculated and/or experimentally demonstrated to be less than the design pressure of the container housing the explosives.

11. Fueled experiments shall be limited such that the total inventory of $^{131-135}I$ in the experiment is not greater than 1.5 curies.

12. Where the possibility exists that the failure of an experiment (except fueled experiments) could release radioactive gases or aerosols to the reactor bay or the unrestricted area, the quantity and type of material to be irradiated shall be limited such that the airborne concentration of radioactivity averaged over a year will not exceed the limits of Appendix B of 10 CFR, Part 20, assuming 100% of the gases or aerosols escape.

13. Irradiation of the following materials will require specific prior review and approval by the Reactor Operations Committee (ROC), including the Reactor Supervisor, the Senior Health Physicist, and the Reactor Administrator, even when such an irradiation appears to fall generally within the scope of an approved reactor experiment.

    a) Highly flammable organic solids and solvents, or other highly flammable materials.

    b) Any substance known or likely to exhibit characteristics due to irradiation which would require special safety precautions. Such characteristics include, but are not limited to, excessive gas buildup in sample containers, unusually high radiation dose rates, and the release of airborne radioactivity.

Encapsulation Limitations

1. Specifically-Approved Minimum Encapsulation Methods

   The methods of encapsulation detailed in Table 3.8.4 have been found by testing and experience to provide satisfactory containment for the specified sample forms. Designated containments are applicable only to the specific irradiation facilities, the physical forms of materials, and the corresponding irradiation times shown Table 3.8.4.

Proposed use of encapsulations not specified in the tables will be evaluated under Section 2, "Other Encapsulation Methods." All polyethylene vials, except those designated as "vented," and all Nalgene liquid scintillation bags must be heat-sealed. Other containments must be closed according to the specifications given in Table 3.8.4. Except for the thermal column and beam ports, containments specified in the tables are **in addition to** the containment provided by the TRIGA tube or rabbit tube used to hold encapsulated samples during irradiation.

2. Other Encapsulation Methods

Various other methods of encapsulation may also be suitable. However, before other methods may be used by experimenters, they must be approved by the Reactor Supervisor and the Senior Health Physicist. This approval will be based on actual testing of the proposed containment, or on other documented evaluations with conclude that a proposed encapsulation will provide an acceptable degree of containment when compared to encapsulations currently approved for the type of material involved, the irradiation time, and the irradiation facility. The Reactor Supervisor will maintain records of tests or other evaluations used to determine the containment capability and/or general suitability of proposed encapsulations. The approval of encapsulations by the Reactor Supervisor and the Senior Health Physicist will be documented by their signatures on the applicable Irradiation Request.

3. Reactor Operations Committee Approved Reactor Experiments

If a specific experiment has been approved by the ROC, then that experiment and its

requirements regarding encapsulation, or lack of it, will take precedence over the encapsulation requirements described here.

4. Generic Statement on the Relative Adequacy of Various Encapsulations

The above procedures provide guidance on the **minimum** acceptable encapsulations for each of the various OSTR irradiation facilities and required documentation for deviations from the standard encapsulations given. The purpose of this statement is to allow a more rigorous encapsulation to be used in any of the OSTR irradiation facilities without further approval other than the signatures of the Senior Health Physicist and the Reactor Supervisor on the Irradiation Request Form. A more rigorous encapsulation is defined as the use of flame sealed quartz or sealed aluminum containers instead of polyethylene containers. Many years of experience and actual use have shown that there are no limitations to the use of sealed quartz containers or aluminum containers for irradiating samples in the OSTR. Therefore, substituting these containers in cases where polyethylene is allowed only increases the level of confidence in the containment integrity.

3.8.6. Administrative and Services Contact

Professor Arthur G. Johnson, Director
Radiation Center - A100
Oregon State University
Corvallis, OR 97331-5902
(503) 737-2341

or

Professor S. E. Binney
Oregon State University
Corvallis, OR 97331-5902

Table 3.8.1. Neutron Fluxes at the OSTR Irradiation Facilities

Neutron Flux at 1 MW (n. $cm^{-2}.s^{-1}$) Facility	Thermal	Epithermal	Cd-Au Ratio
Pneumatic transfer tube (PTT)	1.0×10^{13}	4.0×10^{11}	2.6
Rotating rack (RR)	3.0×10^{12}	1.2×10^{11}	2.6
Thermal column			
Center position at inner face	1.0×10^{11}	5.0×10^{8}	14
At 16.25' from inner face	2.5×10^{10}	3.4×10^{7}	48
At 32.35" from inner face	5.8×10^{9}	2.0×10^{6}	196
Beam port 1	1.8×10^{7}	Variable, see note 1	2
Beam port 3	1.5×10^{8}	"	2
Central thimble (on top of plug)[2]	1.4×10^{12}	NM	N/A
Top of reactor core[2]	$\sim 1.0 \times 10^{8}$	NM	N/A
In-Core dummy fuel element	1.0×10^{13}	$\sim 1.0 \times 10^{13}$	2
Cadmium-lined In-Core Tube (CLICT)	N/A	See Table 3.8.2	N/A

[1]Variable depending on filters and shutters in beam.
[2]Not a normal irradiation position for this reactor.
NM = Not Measured.

Table 3.8.2. Neutron Spectrum in Cadmium-Lined In-Core Tube (CLICT)

Group midpoint energy, MeV	Neutron flux per unit lethargy, n/cm^2-s-Δu	Neutron flux per unit energy, n/cm^2-s-MeV
3.325e-07	1.623e+11	4.983e+1
5.485e-07	9.530e+11	1.774e+18
9.065e-07	1.439e+12	1.621e+18
1.495e-06	1.500e+12	1.024e+18
2.460e-06	1.637e+12	6.793e+17
4.050e-06	1.558e+12	3.926e+17
6.675e-06	1.522e+12	2.327e+17
1.101e-05	1.576e+12	1.461e+17
1.815e-05	1.627e+12	9.153e+16
2.990e-05	1.613e+12	5.506e+16
4.930e-05	1.760e+12	3.644e+16
8.120e-05	1.727e+12	2.170e+16
1.340e-04	1.791e+12	1.364e+16
2.210e-04	1.765e+12	8.149e+15
3.645e-04	1.864e+12	5.220e+15
6.015e-04	1.867e+12	3.168e+15
9.895e-04	1.876e+12	1.935e+15
1.630e-03	1.891e+12	1.184e+15
2.215e-03	1.939e+12	8.773e+14
2.620e-03	1.944e+12	7.439e+14
3.095e-03	2.060e+12	6.673e+14
4.440e-03	1.971e+12	4.533e+14
7.325e-03	1.983e+12	2.764e+14
1.206e-02	2.122e+12	1.796e+14
1.745e-02	2.177e+12	1.256e+14
2.270e-02	2.193e+12	9.709e+13
3.320e-02	2.379e+12	7.299e+13
5.415e-02	2.673e+12	5.038e+13
8.920e-02	3.061e+12	3.502e+13
1.470e-01	3.732e+12	2.592e+13
2.425e-01	4.583e+12	1.929e+13
3.450e-01	5.627e+12	1.640e+13
4.430e-01	5.585e+12	1.267e+13
5.685e-01	7.280e+12	1.287e+13
7.300e-01	8.583e+12	1.182e+13
9.655e-01	8.173e+12	8.529e+12
1.230e+00	9.185e+12	7.492e+12
1.545e+00	9.236e+12	6.010e+12
1.985e+00	8.375e+12	4.241e+12
2.550e+00	8.121e+12	3.202e+12
3.275e+00	5.994e+12	1.840e+12
4.325e+00	4.093e+12	9.535e+11
5.520e+00	2.463e+12	4.477e+11
6.740e+00	1.212e+12	1.804e+11
8.010e+00	5.844e+11	7.309e+10

Table 3.8.3. Usable Dimensions of the OSTR Irradiation Facilities[1]

Irradiation Facility	Inside Dimensions, inches (Diameter x Length)	Comments
Rotating Rack		
Aluminum TRIGA Tube	0.9 x 4.1	(This will be a tight fit)
Polyethylene TRIGA Tube*	0.9 x 3.2 or 0.7 x 4.0	
In-Core Cadmium-Lined Irradiation Tube		
Special Aluminum TRIGA Tube	0.9 x 3.7	
Pneumatic Transfer System		
Short Polyethylene Tube (ID)	0.75 x 1.80 or 0.60 x 2.15	
Long Polyethylene Tube (ID)	0.60 x 4.40	

Thermal Column

Sample irradiation space in the thermal column is created by pulling out graphite stringers. Removing a graphite stringer leaves a space 4 inches square and 4 feet long. (The neutron flux gradient over the 4-foot length is about 3% reduction per centimeter of horizontal movement away from the innermost position).

Dummy Fuel Element

This device is an aluminum fixture machined to the same dimensions as a normal OSTR fuel element but contains no fuel. It has a void space inside for samples, with dimensions as given below, and separates in the middle using a threaded and gasketed joint. It can be placed in any core grid position desired, but is usually used in the innermost B-ring position to achieve a maximum neutron flux. OSTR has two such dummy elements with inner void dimensions as follows:

D.E. No. 1:	1.0 x 21.5 or 1.125 x 6.0
D.E. No. 2:	1.125 x 9.5

[1]Two-dram polyvials are often used by experimenters as the outer encapsulation for many samples. These vials in turn are placed in a TRIGA tube or a pneumatic transfer tube. The volume inside a two-dram vial is 7 cm^3 and O.D. are 0.60 x 2.15 inches.

Table 3.8.4. Methods of encapsulation of target material at the OSTR

Encapsulation Requirements for Rotating Rack

	Facility: Rotating Rack (Lazy Susan)			
	Physical Form of Material	Irradiation (MWh)	Minimum Containment	
			Primary	Secondary
Without Standard Cadmium Covers	Stable Solid	≤1	≤ 4 dram polyethylene vial	Not Required
		≤13	≤ 2 dram polyethylene vial	Not Required
		≤35	Flame-sealed quartz or sealed aluminum container	Not Required
	Liquid, Powder or other Loose Solid Material	≤1	≤ 2 dram polyethylene vial	≤ 4 dram polyethylene vial
		≤13	≤ 2 dram polyethylene vial, ≤ half full (Normally 2/5 dram polyethelene vial)	Normally 2 dram polyethylene vial; but 10 mL Nalgene liquid scintillation bag is ok when 2 dram vial is primary container
		≤35	Flame sealed quartz or welded aluminum container	2 dram polyethylene vial or sealed aluminum container. Vented 4 dram polyethylene vial with maximum use of 21 MWh
With Standard Cadmium Covers(1)	Stable Solid	≤1	≤ 2/5 dram polyethylene vial, or aluminum foil wrap inside cadmium cover inside ≤ 4 dram polyethylene vial	Not required
		≤35	Flame sealed quartz or sealed aluminum container	Vented 4 dram polyethylene vial to hold cadmium covers with maximum use of 21 MWh
			Aluminum foil wrap inside cadmium cover inside sealed aluminum container	Not required
	Liquid, Powder or other Loose Solid Material	≤1	≤2/5 dram polyethylene vial	4 dram polyethylene vial
		≤13	Flame sealed quartz or welded aluminum container	Vented 4 dram polyethylene vial
		≤35	Flame sealed quartz or welded aluminum container	Sealed aluminum container

(1) See footnote No. (1), Table 3.2.

Table 3.8.4. Methods of encapsulation of target material at the OSTR. Cont.

Encapsulation Requirements for Pneumatic Transfer Tube

	Facility: Pneumatic Transfer Tube (Rabbit)			
	Physical Form of Material	Irradiation (kWh)	Minimum Containment	
			Primary	Secondary
Without Cadmium Covers	Stable Solid	≤ 1000	≤ 2 dram polyethylene vial	Not required
	Liquid, Powder or other Loose Solid Material	≤ 1000	≤ 2/5 dram polyethylene vial	≤ 2 dram polyethylene vial
With Cadmium Covers(1),(2)	Stable Solid	≤ 100	≤ 2/5 dram polyethylene vial, or aluminum foil wrap inside cadmium cover inside ≤ 2 dram polyethylene vial	Not required
	Liquid, Powder or other Loose Solid Material	≤ 100	≤ 2/5 dram polyethylene vial	≤ 2 dram polyethylene vial

Footnotes:

(1) A standard cadmium cover referenced in Table 3.1 consists of a small cadmium box and cover which is capable of holding a conventional 2/5 dram or 2/27 dram polyethylene vial.

(2) Cadmium covers referenced in the above table have no specific shape or form requirements other than those imposed by the dimensions of the primary and secondary containment.

Table 3.8.4. Methods of encapsulation of target material at the OSTR. Cont.

Encapsulation Requirements for Thermal Column and Beam Ports

	Facility: Thermal Column and Beam Ports		
	Physical Form of Material	Minimum Containment	
		Primary	Secondary
With or Without Cadmium Covers(1)	Stable Solid	Polyethylene TRIGA tube or other equivalent plastic containment	Not required
	Liquid, Powder or other Loose Solid Material	Sealed polyethylene container	Polyethylene container

Footnote:
(1) Cadmium covers referenced in the above table have no specific shape or form requirements other than those imposed by the dimensions of the primary and secondary containment.

Encapsulation Requirements for Cadmium-Lined In-Core Irradiation Tube

	Facility: Cadmium-Lined In-Core Irradiation Tube (CLICIT)		
	Physical Form of Material	Minimum Containment	
		Primary	Secondary
Without Cadmium Covers	Stable Solid	Flame sealed quartz or sealed aluminum container	Not required
	Liquid, Powder or other Loose Solid Material	Flame sealed quartz or aluminum container	Sealed aluminum container

Encapsulation Requirements for Sample Holding Fuel Element

	Facility: Sample Holding Fuel Element (Dummy)		
	Physical Form of Material	Minimum Containment	
		Primary	Secondary
Without Cadmium Covers	Stable Solid	Flame sealed quartz or sealed aluminum container	Gasket sealed dummy element
	Liquid, Powder or other Loose Solid Material	Flame sealed quartz or welded aluminum container	Gasket sealed dummy element

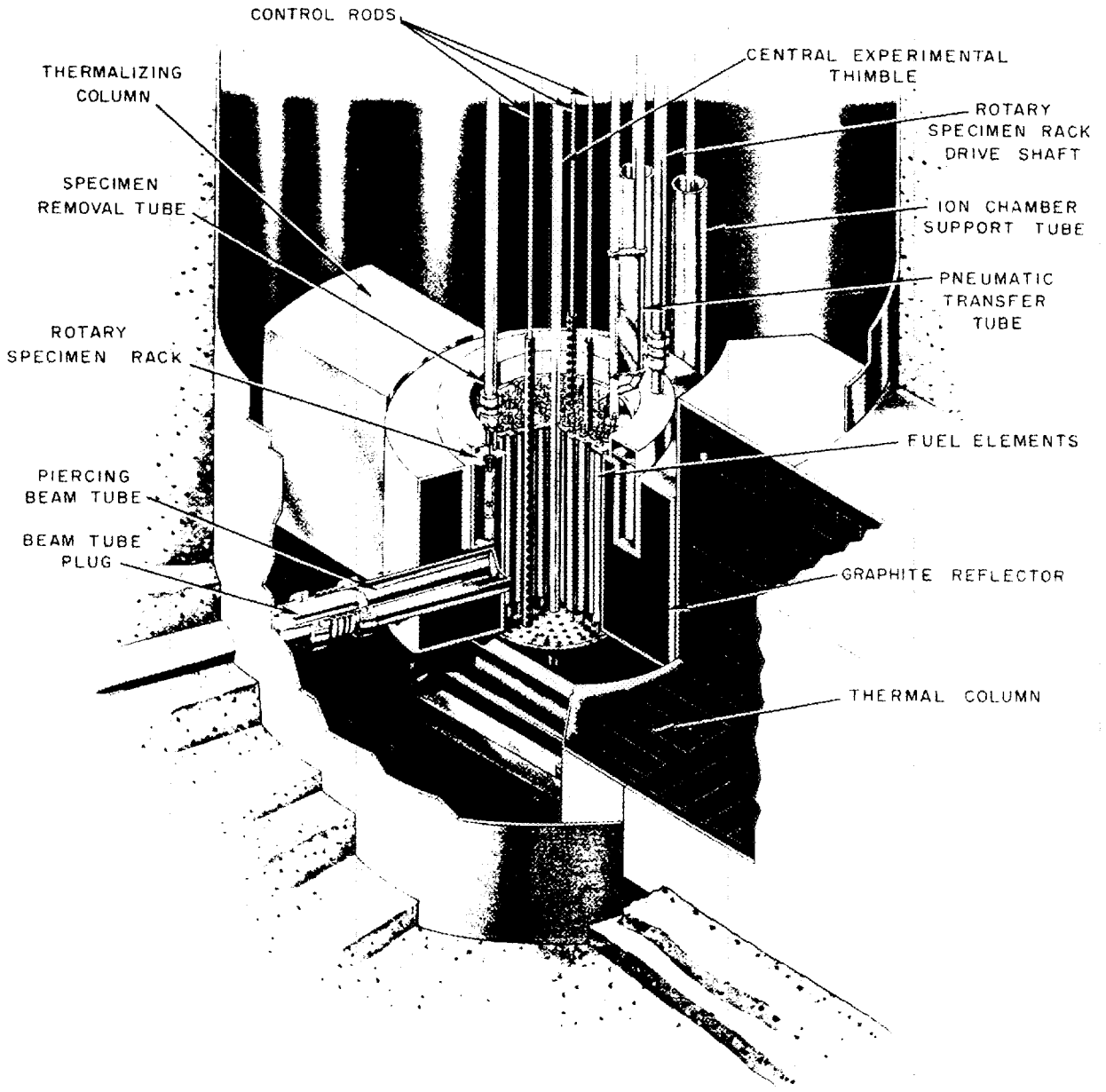

Figure 3.8.1. Cutaway view of OSTR core arrangement (standard TRIGA Mark II)

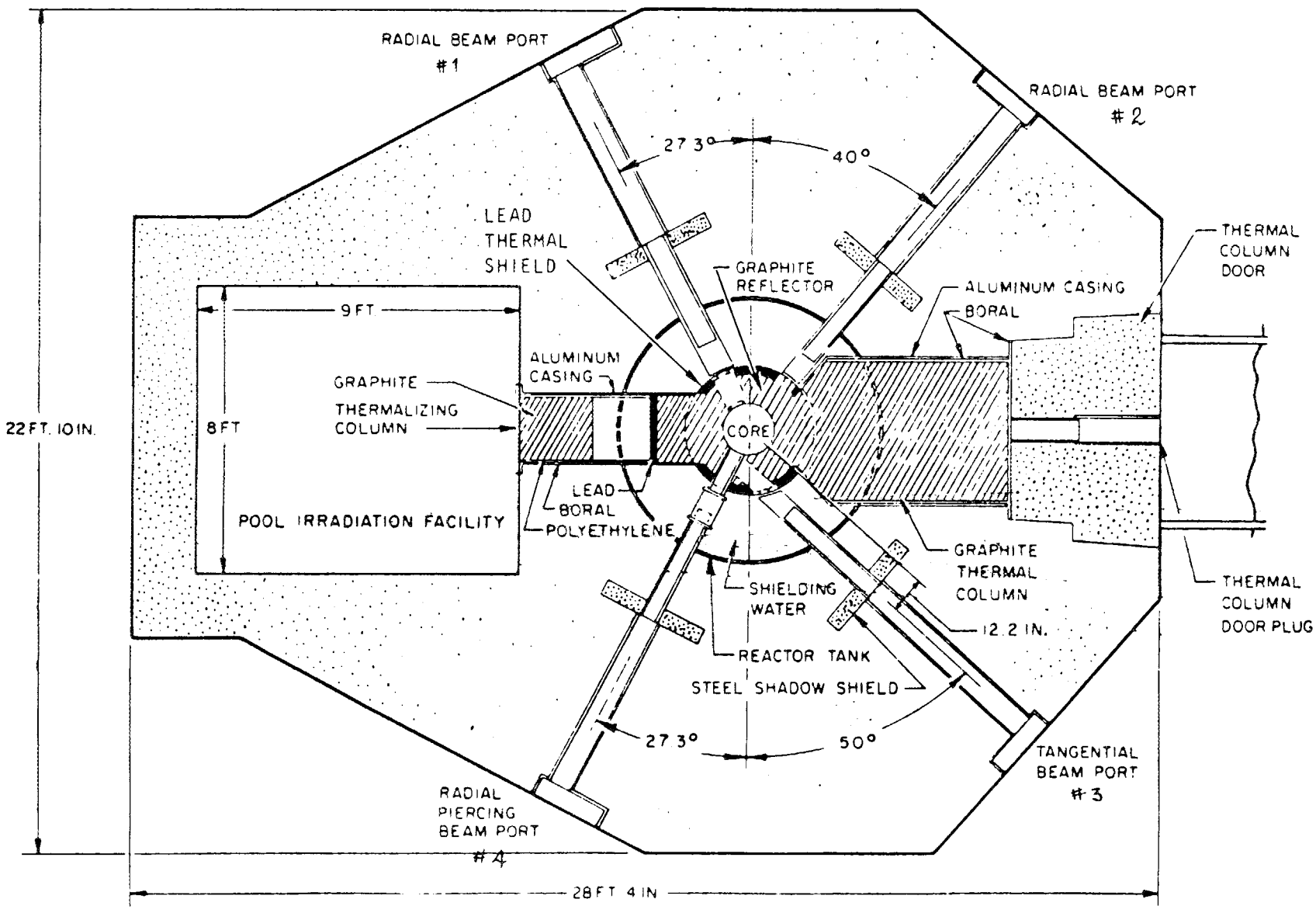

Figure 3.8.2. Horizontal cross-sectional of the OSTR

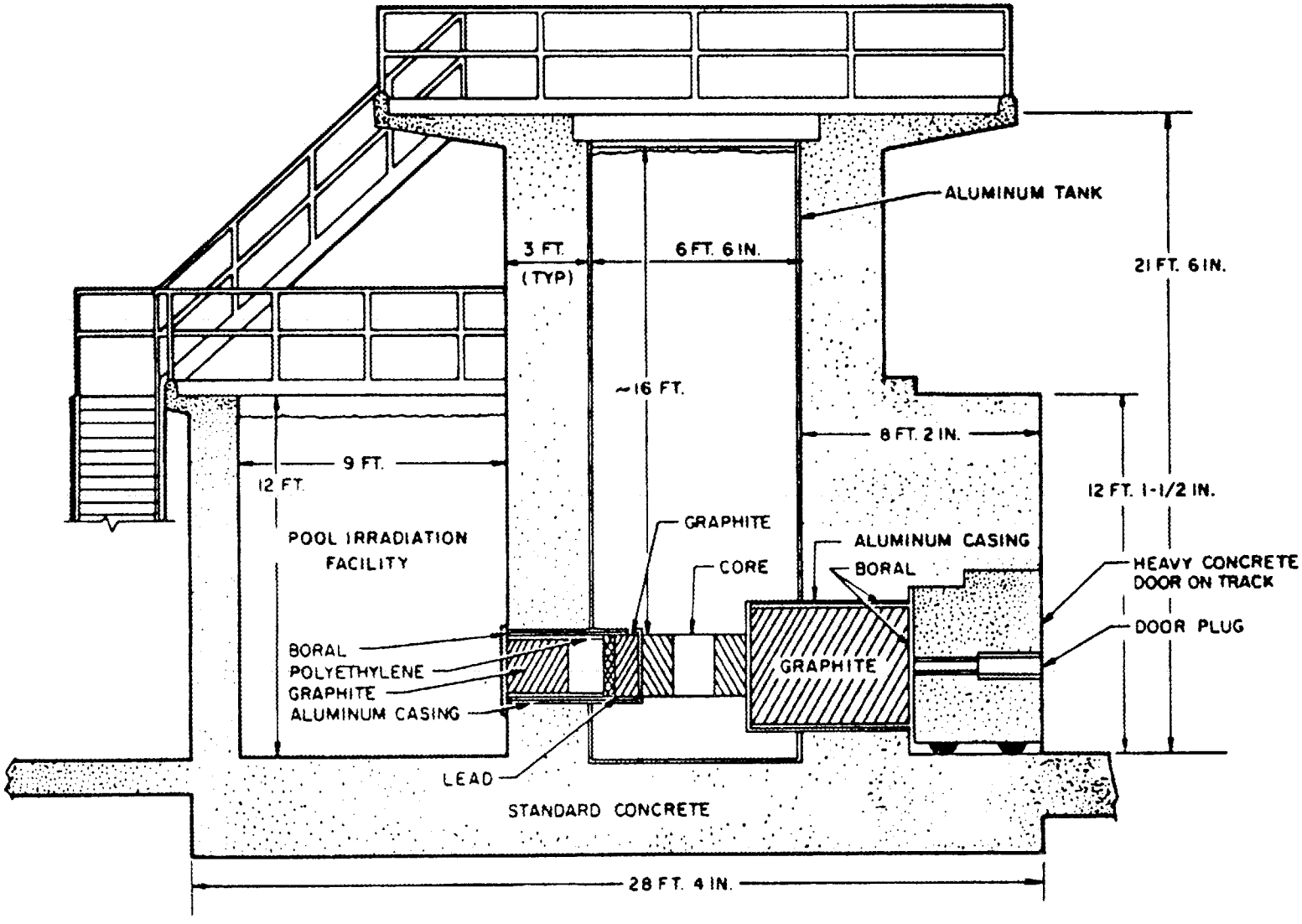

Figure 3.8.3. Vertical cross-section of the OSTR

3.9.0. OMEGA WEST REACTOR--OWR

3.9.1. General
3.9.2. Description of Reactor
3.9.3. Irradiation and Experimental Facilities
3.9.4. Operating Schedule
3.9.5. Supporting Services and Facilities
3.9.6. Administrative and Service Contacts

3.9.1. General

The Omega West Reactor (OWR) is operated by the Los Alamos National Laboratory (LANL) primarily to serve the need of the in-house staff. However, because LANL has a commitment to a broad range of scientific collaboration with universities and industry, the DOE and Laboratory management encourage the use of OWR by other qualified users. Because the reactor is in an unclassified area, it is quite accessible to non-Laboratory users. The OWR is a thermal, heterogeneous, closed-tank research reactor which is light-water moderated and cooled and utilizes aluminum-clad plate-type fuel elements. The OWR is normally operated at a power level of 8 MW for approximately 7.5 hours per day, 5 days per week. Four shutdowns of a week duration are typically scheduled annually. The OWR is supported by a technical staff of 10 full-time employees and has an annual operating budget (FY 1990) of approximately $1.3 M.

3.9.2. Reactor Description

The OWR uses an assembly of Materials Testing Reactor (MTR)-type fuel elements supported inside a stainless steel tank. The core support structure and grid plate are aluminum. Light water circulated downward through the core at 3,500 gal/min serves as moderator and coolant. The reactor is controlled by eight blade-type poison rods. The reactor tank is covered with a stainless steel lid that supports the control-rod drive

mechanisms and also contains two large hatches to provide access to the core. A biological shield of heavy concrete in an irregular octagonal shape surrounds the tank and thermal column. Experimental ports open on all of the shield faces, and a large thermal-column door opens on the east side. Instrumentation ports extend underneath the core from a recess at the bottom of the south face. Figure 2.9.1 is a cutaway illustration of the reactor.

The reactor core consists of a 4 row (numbered 1-4) by 9 column (numbered A-I) array of fuel elements and experiment or sample elements supported vertically in the aluminum grid plate. Eight boron-stainless-steel control blades move in slots between the fuel elements. A beryllium reflector abuts the west face of the core, and a lead gamma-ray shield is positioned against the east face. The north and south faces of the core are water reflected. A plan view of the reactor throughout the vertical center of the core is shown in Figure 3.9.2.

3.9.3. Irradiation and Experimental Facilities

Facilities for the irradiation of small samples in the Omega West Reactor include a number of pneumatically operated rabbit systems, a hydraulic rabbit system to transfer rabbits into the reactor core, and in-core sample holders for longer term irradiations. Larger samples may be irradiated in the vertical ports adjacent to the reactor core or in removable graphite stringers in the thermal column. Several of the pneumatic rabbit systems are computer controlled to provide elemental assays by Neutron Activation Analysis (NAA) or Delayed Neutron Counting (DNC) techniques.

At the present time, there are 12 pneumatically operated rabbit systems in the thermal column. Of these, five automated rabbit systems on the north face of the thermal column are dedicated to the NAA and DNC systems. Rabbits for use in the thermal column range in capacity from 4 to 40 cm^3. The 4-cm^3 rabbits are made of aluminum or ethylene-butylene plastic, and the large sizes are available only in plastic. The aluminum rabbit body and cap

are swage-closed, and the plastic rabbits are closed by screw lids. The rabbit systems on the south side of the OWR will accommodate only the 4-cm^3 size, which measures about 1/2" O.D. and 2-3/8" in length. A description of OWR irradiation facilities, which are summarized in Tables 3.9.1 and 3.9.2, follows:

In-Core Sample Holders

Small samples can be irradiated in the reactor core for long periods (a few days to several months) in one of the two available sample elements. The samples are usually sealed in aluminum cans identical to those used in the hydraulic rabbit facility and are placed in a dummy fuel-element holder equipped with spring clips. The holder is then placed in one of the empty fuel positions (4D and 4F). The sample cans are cooled by water flow through the sample element. The thermal flux and gamma heating in positions 4-D and 4-F are the same as those for the hydraulic rabbit facility.

In-Core Experiment Facilities

The term "slanted-tube" ports is used at the OWR to describe the provisions made for in-core irradiations of instrumented-capsule experiments. Experiments that can be built into capsules 2" or less in diameter can be inserted through ports in the reactor lid and can extend downward through clearance holes in the support bridges into empty sample positions in the core. The capsule extension tubes are sealed at the lid by gland and chevron-seal assemblies. There are nine access ports in a single row across the lid cover plate. These ports are offset to avoid interference with the control-rod mechanism, with the result that the tubes slant down into the core at an angle of 1°.

End-Port Rabbit (EPR) System

The active end of the End-Port Rabbit system is in the South End-Port, about 1" from the south face of the reactor core. A water-cooled jacket surrounds this end of the tube to remove the heat generated in the samples by fission and gamma-ray absorption. The gamma heating is about 0.32 w/g in this rabbit system. Aluminum rabbits must be used in the EPR except for very short irradiations.

Epithermal Rabbit (EpiB) System

The active end of the EpiB system tube is approximately at the east-west core center line in the North Upper Thru-Port, is water cooled, and is shielded from thermal neutrons by a 1" absorber made of Al and ^{10}B (89/11%, respectively). The neutron energy cutoff in this design is estimated to be 400 eV. The gamma heating is less than that in the EPR system, and plastic rabbits have been successfully used for exposure times up to 7 hours. Those materials requiring quartz sealing or longer exposures must be irradiated in the 4-cm^3 Al rabbits.

Hydraulic Rabbit System

The active end of the Hydraulic Rabbit system tube is about 7.5" below the core center line in a sample element in core position 3E. Samples are sealed in Al rabbits by cold-welding the lids to the Al body, making a rabbit approximately 1.6" long by 8.75" O.D. The rabbits are loaded in and discharged from a shielded, eight-position rotor. Since the hydraulic rabbits are pumped into the core, strict limits on the change in reactivity must be observed. Because of the high rate of gamma-heating for materials placed in the core (about 4.8 w/g), care must be exercised in packaging samples in the rabbits to assure good thermal contact

between sample and rabbit. If good thermal contact is not provided, materials having low melting points and/or high cross section (e.g., Cd) may melt in spite of the fact that the exterior of the rabbit is water-cooled. Up to 100 mg of fissionable material may be irradiated in the Hydraulic Rabbit if sealed in quartz.

Cadmium Rabbit (EpiCd) System

The Epithermal Cadmium Rabbit system is located in the North Vertical Port. The cadmium surrounding the rabbit is two layers of 0.016" Cd foil on the sides and bottom. The active end of the tube is located about 2.4" below the center-line of the core. A water filled space (outer wall is the North Vertical Port) surrounds the rabbit to remove heat generated in the samples by γ-ray absorption. Gamma-ray heating is about 0.5 w/g in this rabbit system. Plastic rabbits suffer severe radiation damage in this system and irradiation in plastic are limited to two hours or less. Aluminum rabbits are used for all irradiations over 2 hours.

South Vertical Port

Because the vertical port is normally open to the atmosphere, requests for irradiation of materials that produce toxic, explosive, corrosive, or radioactive fumes or gases as a result of decomposition under irradiation and/or high temperatures cannot be approved without assurance that containment and/or cooling is adequate. This port is used for large sample irradiations, for investigations of the dynamic response of various materials, instruments, and instrument components to large doses of radiation, and for radiation-damage studies.

Thermal Column Stringers

Several of the ports in the thermal column contain easily removable horizontal

graphite stringers with vertical holes at their inner ends in which samples of varying sizes may be placed for irradiation. Following is a list of these facilities and their characteristics:

Stringer	Sample Holder	Maximum Flux ($n.cm^{-2}s^{-1}$)
TC-5S	Three 3" dia. x 3" deep vertical holes	$1.5x10^{12}$
TC-8N	Two 3" dia. x 3" deep vertical holes	$5x10^{10}$
TC-4E	Four 0.625" dia. x 3" deep vertical holes	$3.8x10^{11}$

Samples must be loaded in and removed from these facilities during shutdown, so requested irradiations are usually scheduled for an integral number of days in order that radioactive samples may be removed in the morning prior to start-up.

3.9.4. Operating Schedule

The OWR is normally operated at a power level of 8 MW for approximately 7.5 hours per day, 5 days per week. Four week-long maintenance shutdowns are typically scheduled per year.

3.9.5. Supporting Services and Facilities

3.9.6. Administrative and Service Contacts

Michael M. Minor and Terry W. Smith

Los Alamos National Laboratory

Los Alamos, NM 87544

Table 3.9.1. Hydraulic and Pneumatic Rabbit Ports at the OWR

Facility	Location	Max. Sample Dimension Dia. x Length	Thermal Flux at 8 MWt, $n.cm^{-2}.sec^{-1}$	Comments
TCR-1[1]	TC-2S	9 x 57 mm	3.4×10^{12}	Cd/Au = 9.0
TCR-2[1]	TC-1S	"	6.0×10^{12}	
TCR-3[1]	TC-3S	"	2.0×10^{12}	
TCR-4[1]	TC-1S	"	9.7×10^{12}	Cd/Au = 2.75. Water cooled.
TCR-5	TC-1N	"	"	"
TCR-8	TC-1N	"	$\sim 7.0 \times 10^{12}$	
TCR-9[2]	TC-1N	25 ml scintillation	1.0×10^{13}	Low background DNC.
TCR-10[2]	TC-1N	9 x 57 mm	6.0×10^{12}	Cd/Au = 4.5. DNC, NAA.
TCR-11	TC-1N	"	5.0×10^{12}	Cd/Au = 6.4.
TCR-12	TC-1S	"	$\sim 7.0 \times 10^{12}$	Sample is positioned at 45° to horizontal.
TCR-13	TC-1S	"	"	"
Epithermal Rabbit	North Upper Thru Port	"		Boron shielded.
Epithermal Rabbit	North Vertical Thru Port	"	Fast flux $\sim = 2 \times 10^{12}$	Cadmium shielded.
End-Port	South Beam	0.4 x 1.9 in	4.0×10^{13}	Sample terminal is water cooled. Radiation heating is 0.5 w/g.
Hydraulic Rabbit	Core Position	0.75 x 1.6 in	9.6×10^{13}	Radiation heating is 5.0 w/g. Sample is water cooled.

[1]Samples may be pneumatically transferred to and from Chem Room.
[2]Dedicated to automatic Delayed Neutron and Neutron Activation Analysis Systems.

Table 3.9.2. Core, Beam Ports, and Thermal Column Stringers at the OWR

Facility	Location	Max. Sample Dimension Dia. x Length	Thermal Flux at 8 MW, $n.cm^{-2}.sec^{-1}$	Comments
In-Core	Core positions 4-D or 4-F	Up to 2.09 in dia, length unrestricted	9.0×10^{13}	Other core positions can be used by altering core-loading positions.
South Vertical Port	2.5 in from NW and SW	3.5 in dia x 12 in long	1.6×10^{13}	Radiation heating = 0.3 w/g If required, cooling must be provided separately. Gamma flux = 8×10^{7} R/hr Fast flux (1.0 keV) = 5×10^{12}
Thermal Column Ports		up to 12 x 12 in	1.6×10^{9} to 5.6×10^{13}	
TC-3E	Beam with graphite removed to curtain	4.25 in square	3.0×10^{8}	Cd/Au = 133
TC-4E	Stringer holes deep holes. Each can hold 10 std. rabbits.	Two 6 cm dia x 4 in	1.5×10^{12}	Samples easily loaded and removed before start-up.
TC-8N			$\sim 5.0 \times 10^{10}$	7×10^{13} fissions per gram per hour ^{235}U.
Radiography Port	Cave	Horizontal field		L/D
	0 in	4.25 in	8.6×10^{6}	50
	20 in	8 in	2.4×10^{6}	100
	60 in	15.5 in	0.6×10^{6}	190
Upper & Lower Through Ports	Across west side of Be reflector	6 in dia, length unrestricted	2.5×10^{13}	Ports accessible from each end.
Filtered beam irradiation port	West beam	~1 in dia	3.0×10^{7} @ 25 keV	External beam also available.

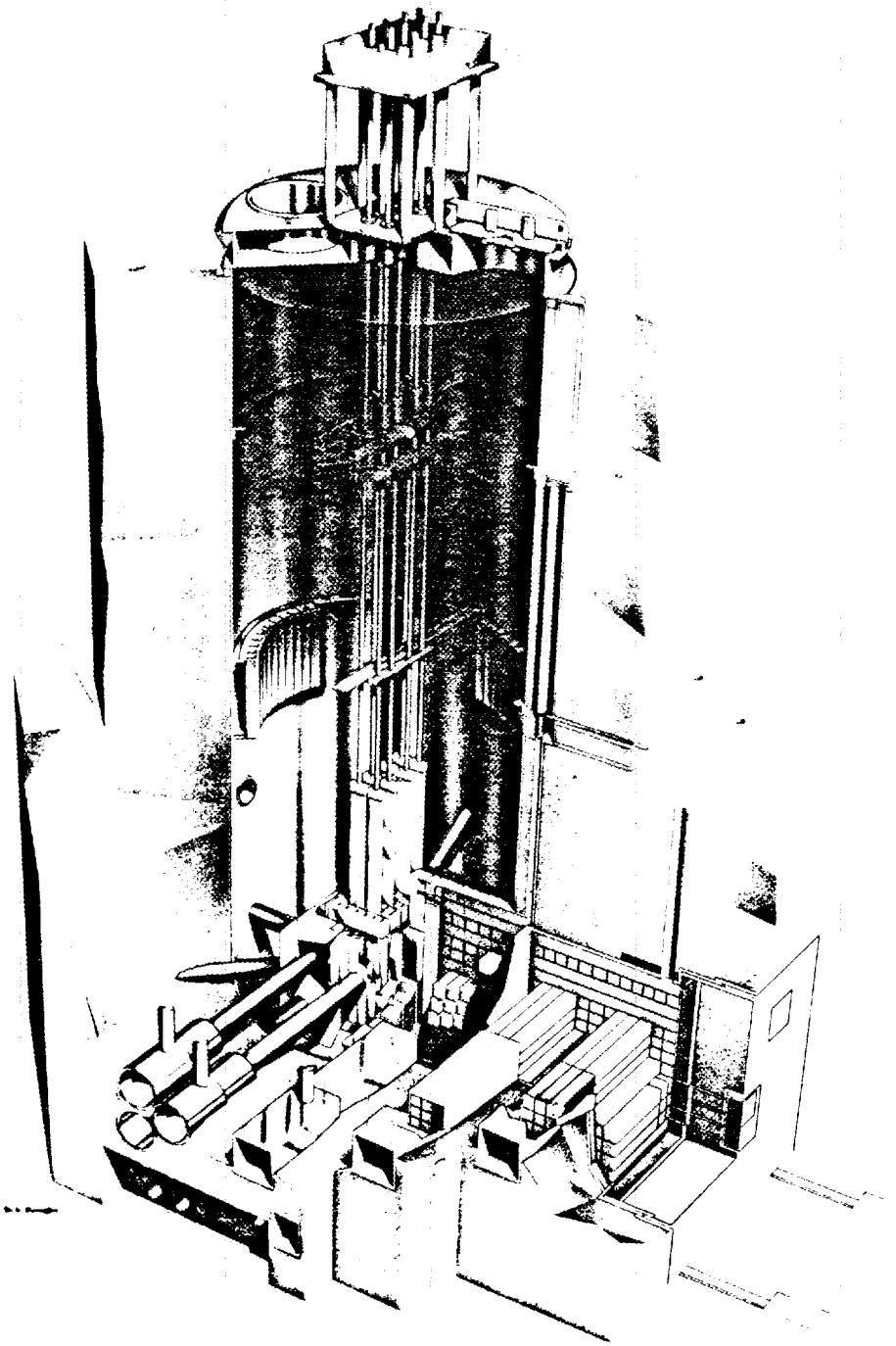

Figure 3.9.1. Cutaway view of OWR

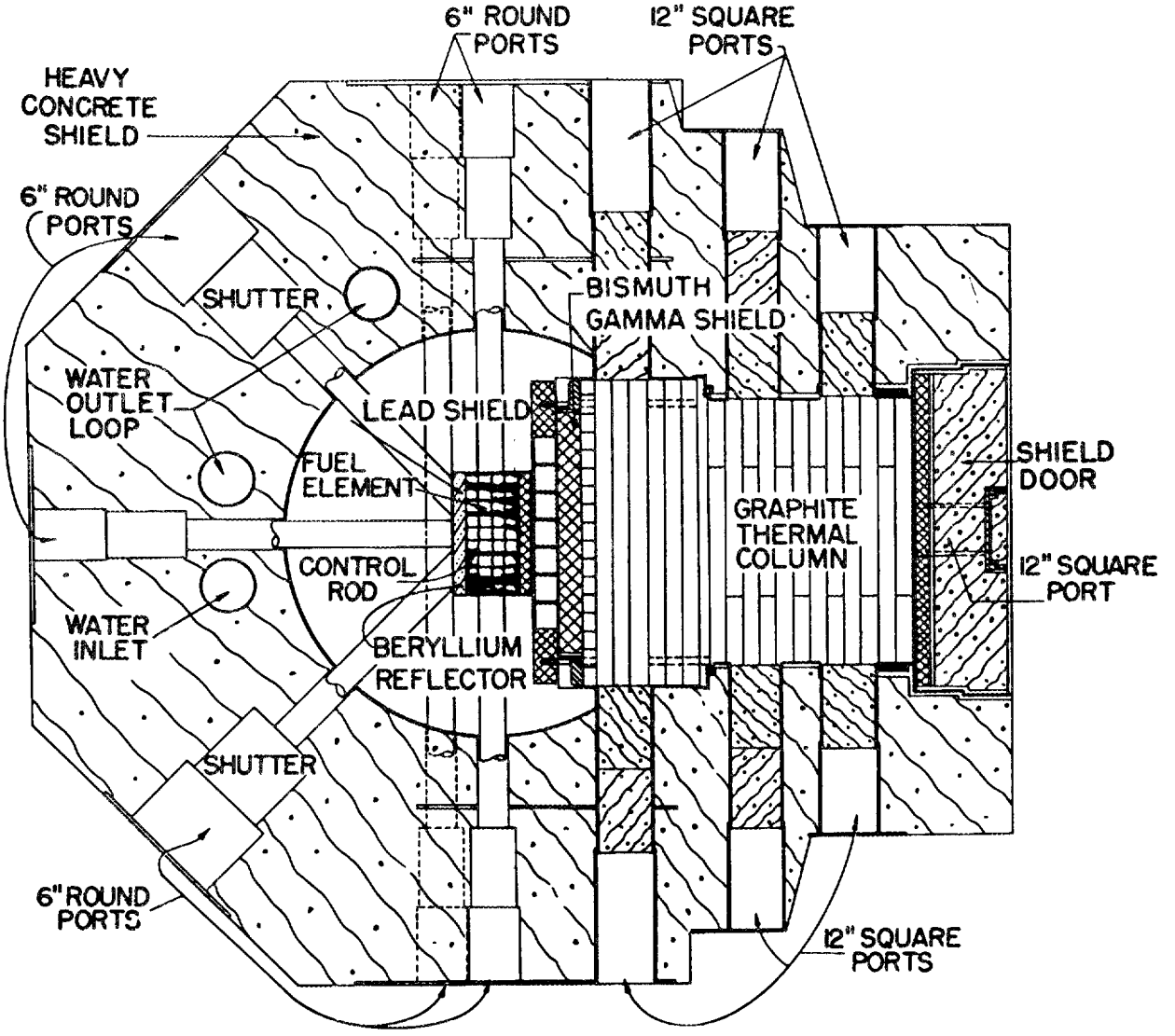

Figure 3.9.2. Plan view of the OWR through the vertical center of the core

4. Projection of Availability and Capabilities in 1990's

4.1. Advanced Neutron Source--ANS

Construction of the ANS is expected in the late nineties. The new facility will be located near the High Flux Isotope Reactor (HFIR) in the Melton Valley area at the Oak Ridge National Laboratory in Oak Ridge, Tennessee. The ANS is being designed to offer unique opportunities for neutron scattering, materials testing and irradiation, nuclear physics and radioisotope production. Operation of the ANS will provide an opportunity for the U.S. to regain its international leadership role in neutron scattering research. The initial design for the ANS is now complete. The ANS will have about 40 neutron beams for materials research and other neutron scattering experiments. A diagram of the preliminary ANS reactor Assembly is shown in Figure 4.1.

In addition, hydraulic tube assemblies are also being planned in the ANS design which will provide an important capability for radioisotope production in the high neutron flux regions. Four hydraulic tubes (HT-1 to HT-4) are currently planned in the heavy water reflector region. Four vertical hole positions (VH-1 to VH-4) are also planned for target positions and the transuranic isotope production positions will be located inside the upper fuel element. Estimates for the unperturbed neutron flux values are given in Table 4.1.

ANS Technical Contact

John B. Hayter
ANS Technical Director
Oak Ridge National Laboratory
Building 7962
Oak Ridge, TN 37831-6393

(615) 574-5239

Table 4.1. ANS Conceptual Design and Scientific Goals Required by User Communities for an Advanced Neutron Source

Parameter[a]	Goals (Neutron Flux in 10^{15} n.cm^{-2}.s^{-1})	Conceptual Design
Radioisotope Production		
Transuranium production		
Epithermal flux	≥0.6	1.1
Epithermal/thermal flux ratio	≥0.25	0.3
Allowable peak heat flux (MW/m^2)	4	[TBD]
Annual production capability ^{252}Cf(g)	1.5	1.7
^{254}Es (μg)	40	60
Hydraulic rabbit tube at epithermal peak		
Epithermal/thermal flux ratio	≥0.25	0.24
Allowable peak heat flux (MW/m^2)	1.75	1.75
Other isotope production facilities		
Thermal flux	1	0.05-0.9[b]
Number of reflector positions	≥4	4
Number of hydraulic rabbit tubes	3	3
Nuclear and Fundamental Physics		
Number of thermal through tubes	1	1
Number of slant thermal beams	1	1
Number of very cold beams	2	2
Materials Irradiation Testing		
In-core facilities		
Fast flux	≥1.4	3.1
Fast/thermal flux ratio	≥0.5	1.1
Total number of positions	10	10
Number of instrumented positions	2	2
Damage rate [displacements per atom per year (dpa/y) in stainless steel]	≥30	[TBD]
Nuclear heating rate (w/g in stainless steel)	≤54	55
Axial flux gradient over 200 mm	≤30%	5%
Available diameter (mm)	≥17	48
Available length (mm)	≥500	500
Reflector facilities		
Fast flux	≥0.5	0.4

Table 4.1. Continued

Parameter[a,b]		Goals (Neutron Flux in 10^{15} n.cm^{-2}.s^{-1})	Conceptual Design
Materials Irradiation Testing (cont.)			
Fast:thermal ratio		≥0.33	0.1
Number of instrumented positions		≥8	8
Damage rate (dpa/y in stainless steel)		≥8	8
Nuclear heating rate (w/g in stainless steel)		≤15	18
Axial flux gradient over 200 mm		≤30%	10%
Available diameter (mm)		≥48	48
Available length (mm)		≥500	300
Materials Analysis			
Activation analysis rabbit tubes[c]			
Pneumatic tubes			
PT1 (2 cc)	Flux	≥0.2	0.3
	Heat load, w/g	≤0.2	0.1
PT2,3 (40 cc)	Flux	$0.2 \leq \phi \leq 0.4$	0.4
	Heat load, w/g	≤0.4	[TBD]
PT4,5 (40 cc)	Flux	≥0.5	0.09
	Heat load, w/g	Min. possible	0.04
Light water tubes			
PF1 (120 cc)	Flux	$0.01 \leq \phi \leq 0.04$	0.03
	Heat load, w/g	≤0.2	0.2
PF2 (120 cc)	Flux	$0.005 \leq \phi \leq 0.008$	0.006
	Heat load, w/g	≤0.1	0.16
Prompt-gamma activation analysis cold neutron stations			
Low-background (multiple beam) guide system		1	1
Neutron depth profiling			
Number of slant cold beams	1	1	1
Gamma irradiation facility	≥1	1	1
Positron production position	1	1	1

Table 4.1. Continued

Parameter[a,b]	Goals	Conceptual Design
	(Neutron Flux in 10^{15} $n.cm^{-2}.s^{-1}$)	
	Neutron Scattering	
Cold neutrons		
Thermal flux at cold sources	2-4	4
Number of cold sources	2	2
Number of horizontal cold guides	14	14
Number of slant cold beams for scattering instruments	1	1
Thermal neutrons		
Peak thermal flux in reflector	5-10	7.4
Thermal/fast flux ratio	≥80	≥200
Number of thermal tangential tubes	7	7
Hot neutrons		
Thermal flux at hot source	≥1	1
Number of hot sources	1	1
Number of hot beams	2	2

[a]Neutron spectra terms as used in this table are defined as follows:

Thermal ≤0.625 eV

0.625 eV ≤ epithermal ≤ 100 eV

fast > 100 keV

[b]Can be increase if needed.

[c]These performance goals have not yet been endorsed by NSCANS.

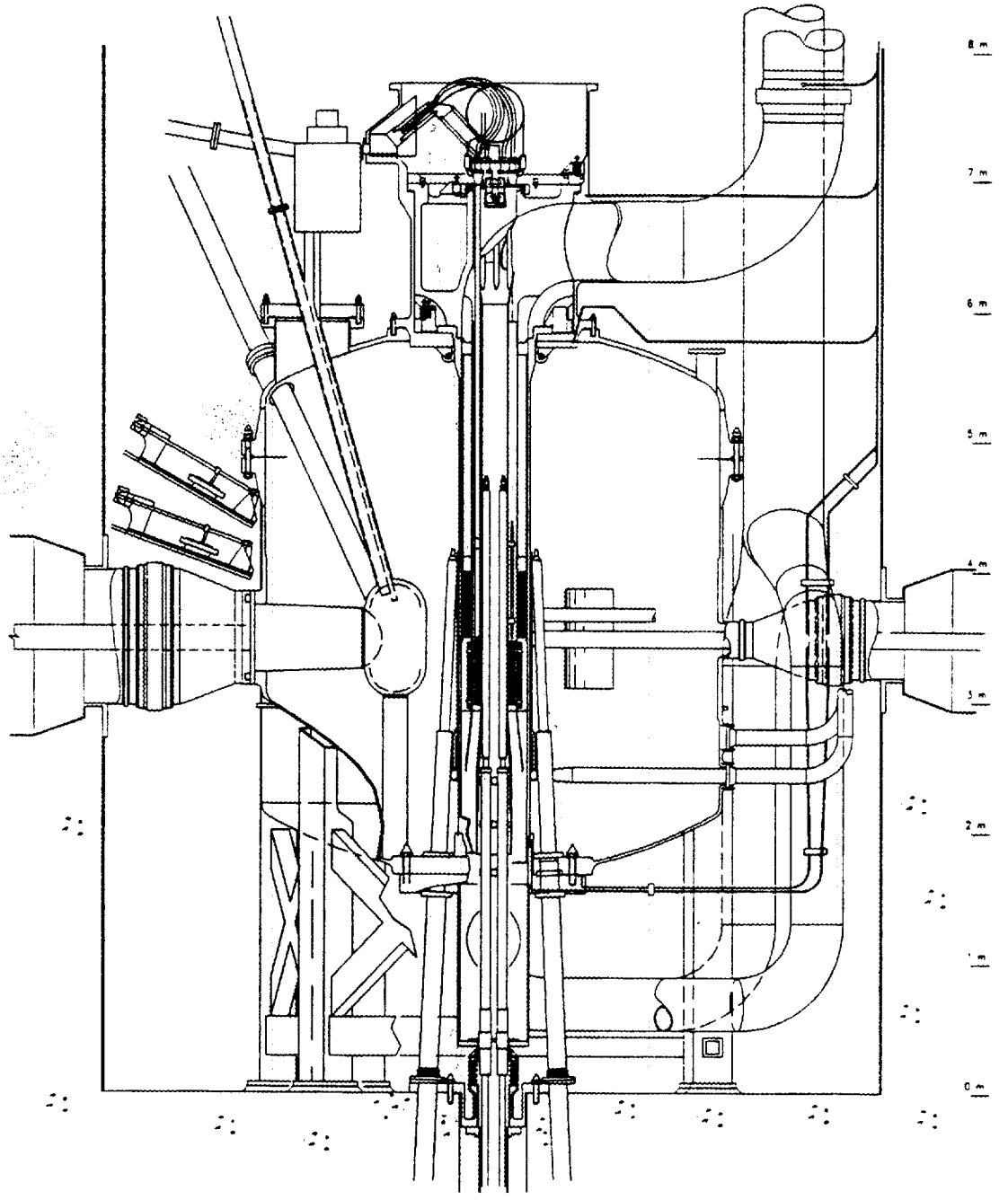

Figure 4.1. Preliminary Design of the ANS Reactor Assembly.

INTERNAL DISTRIBUTION

1. C. W. Alexander
2. J. F. Allred
3. K. R. Ambrose
4. J. T. Bell
5. J. E. Bigelow
6. T. A. Butler
7. A. P. Callahan
8. E. D. Collins
9. D. M. Ferren
10. R. K. Genung
11. H. A. Glovier
12. M. M. Goodman
13. J. B. Hayter
14. J. R. Hightower
15. R. W. Hobbs
16. G. W. Kabalka
17. S. V. Kaye
18-22. F. F. Knapp, Jr.
23. C. R. Lambert
24. D. W. McPherson
25. S. Mirzadeh
26. C. L. Ottinger
27. B. D. Patton
28. G. Prosser
29. D. W. Ramey
30. D. E. Reichle
31. D. E. Rice
32. J. B. Richard
33. P. S. Rohwer
34. C. D. West
35. S. J. Wolfe
36-37. Central Research Library
38. Document Record Section
39-40. Laboratory Records Dept.
41. Lab. Records, ORNL RC
42. ORNL Patent Section

EXTERNAL DISTRIBUTION

43. R. W. Atcher, Chemistry Division, Argonne National Laboratory, Bldg. 211, 9700 S. Cass Avenue, Argonne, IL 60439
44. H. J. Biersack, M.D., Director, Klinik fuer Nuklear Medizin, Der Universitat Bonn, Sigmund Freud Strasse 25, D-5300, Bonn 1, Germany.
45. S. E. Binney, Radiation Center - A100, Oregon State University, Corvallis, OR 97331-5903
46. C. Brihaye, Centre de Recherches du Cyclotron, Universite de Liege, Belgium
47. D. Cole, DOE-OHER, ER-73, Washington, DC 20585
48. B. Coursey, National Institute for Standards and Technology, Building 245, Room C214, Gaithersburg, Maryland 20899
49. G. J. Ehrhardt, University of Missouri Research Reactor, Research Park, Columbia, MO 65211
50. D. E. Erb, Director, Isotope Production and Distribution, U.S. DOE, Washington, D.C. 20545
51. R. D. Finn, Dept. Radiology, Memorial Sloan Kettering Cancer Center, 1275 York Avenue, New York, NY 10021
52. P. Franken, M.D., Dienst Radioisotopen, Academische Ziekenhuis, Vrje Universiteit Brussel, Laarbeeklaan 101, 1090 Brussels, Belgium
53. A. Fritzberg, NeoRx Corporation, 410 West Harrison, Seattle, WA 98119
54. D. M. Goldenberg, M.D., Center of Molecular Medicine and Immunology, 1 Bruce Street, Newark, NJ 07103
55. G. Goldstein, DOE-OHER, ER-73, Washington, DC 20585
56. M. Guillaume, Centre de Recherches du Cyclotron, Universite de Liege, Belgium

57. D. R. Hamilton, Director, Division of Technical Development, OTA/CDRH/FDA, 1901 Chapman Avenue, Rockville, MD 20857
58. O. K. Harling, Director, MIT Nuclear Research Laboratory, 138 Albany St., Cambridge, MA 02139
59. J. Hiltunen, Technical Research Centre of Finland, Reactor Laboratory, Otakaari 3 A, SF-02150 Espoo, Finland
60. N. Holden, HFBR Research Coordinator, Reactor Division, Bldg. 750, Brookhaven National Laboratory, Upton, NY 11973
61. T. Hossain, Nucl. Eng. Dept., Ward Laboratories, Cornell University, Ithaca, NY 14853
62. A. Johnson, Director, Radiation Center - A100, Oregon State University, Corvallis, OR 97331-5903
63. R. A. Karam, Director, Neely Nuclear Research Center, Georgia Institute of Technology, 900 Atlantic Drive, Atlanta, GA 30332-0425
64. G. Kirsch, Department of Chemistry, Universite de Metz, Metz, France
65. C. R. Klee, Div. of Energy Research, Reactor Operations, Office of Facilities, Fuel Cycle and Test Programs, NE-473 Room F-441, Germantown, MD
66. J. Kropp, M.D., Klinik fuer Nuklear Medizin, Der Universitat Bonn, Sigmund Freud Strasse 25, D-5300 Bonn 1, Germany
67. D. J. Maddalena, FRACI, Department of Pharmacology, Sydney University, NSW 2006, Sydney, Australia
68. J. Maddox, 4608 Flower Valley Drive, Rockville, MD 20853-1733
69. L. F. Mausner, Medical Department, Bldg. 801, Brookhaven National Laboratory, Upton, NY 11973
70. P. D. Miller, Research Reactor Facility, University of Missouri, Columbia, MO 65211
71. M. M. Minor, Research Reactor Group, IMC-5, MS G776, Isotope and Nuclear Chemistry Division, Los Alamos National Laboratory, Los Alamos, NM 87545
72. Office of Assistant Manager for Energy Research and Development DOE-ORO, Oak Ridge, TN 37831
73. A. B. Packard, Division of Nuclear Medicine, Children's Hospital, 300 Longwood Avenue, Boston, MA 02115
74. G. Peterson, INC-15, MS J514, Los Alamos National Laboratory, Los Alamos, NM 87545
75. D. R. Phillips, INC-15, MS J514, Los Alamos National Laboratory, Los Alamos, NM 87545
76. S. M. Qaim, Inst. fur Chemie KFA Julich, Postfach 1913, Julich D-5170, Germany
77. R. C. Reba, M.D., 5841 S. Maryland Avenue, U.C. Hospital Box 429, Chicago, IL 60637
78. K. Reichmann, Klinik fuer Nuklear Medizin, Der Universitat Bonn, Sigmund Freud Strasse 25, D-5300 Bonn 1, Germany
79. S. N. Reske, University Clinic, Dept. of Nuclear Medicine, Steinhoevelstrasse 9, D-7900, Ulm, Germany
80. M. Robbins, Mallinckrodt, Inc., 675 McDonnell Blvd., P.O. Box 5840, St. Louis, MO 63134
81. D. C. Rorer, Deputy Head, Reactor Division, Bldg. 750, Brookhaven National Laboratory, Upton, NY 11973
82. T. J. Ruth, TRIUMF, Univ. of British Columbia, Vancouver BC V6T 2A3, Canada
83-93. R. E. Schenter, HO-37, Westington Hanford Co., P.O. Box 1970, Richland, WA 99352

94. S. K. Shukla, Servizio Di Medicina Nucleare, Ospedale S. Eugenio, Piazzale Umanesimo, 10, Italy
95. W. Smith, Deputy Group Leader, Research Reactor Group, IMC-5, MS G776, Isotope and Nuclear Chemistry Division, Los Alamos National Laboratory, Los Alamos, NM 87545
96. P. C. Srivastava, DOE-OHER, ER-73, Washington, DC 20585
97. S. C. Srivastava, Bldg. 801, Medical Dept., BNL, Upton, NY 11973
98. H. W. Strauss, M.D., Vice President, Diagnostics, Pharmaceutical Research Institute, Bristol Meyers Squibb, Rt. 202 Provinceline Rd, PO Box 4000, Princeton, NJ 08543-4000

99-109. Office of Scientific and Technical Information, DOE, Oak Ridge, TN 37831

110. H. N. Wagner, Jr., M.D., Div. of Nuclear Medicine, Johns Hopkins Medical Institutions, 615 N. Wolfe Street, Baltimore, MD 21205-2179
111. D. W. Wester, Pacific Northwest Laboratory and Westinghouse Hanford Company, Richland, WA 99352
112. A. P. Wolf, BNL, Upton, NY 11973
113. R. Wolfangel, Mallinckrodt, Inc., 675 McDonnell Blvd., P.O. Box 5840, St. Louis, MO 63134
114. D. V. Woo, Centocor, 244 Great Valley Parkway, Malvern, PA 19355
115. R. W. Wood, Jr., DOE-OHER, ER-73, Washington, DC 20585
116. S. Wynchank, Research Institute for Medical Biophysics (RIMB), Republic of South Africa
117. S. Yates, Department of Chemistry, Univ. of Kentucky, Lexington, KY 40506-0055
118. H. H. Young, 10 Holly Drive, Gaithersburg, MD