MARTIN MARIETTA ENERGY SYSTEMS LIBRARIES

3 4456 0363135 4

ORNL/TM-12145

ornl

OAK RIDGE NATIONAL LABORATORY

MARTIN MARIETTA

Technology in Education: A Guidebook for Developing A Science and Math Education Support Program

C. L. Wagner

OAK RIDGE NATIONAL LABORATORY
CENTRAL RESEARCH LIBRARY
CIRCULATION SECTION
4500N ROOM 175
LIBRARY LOAN COPY
DO NOT TRANSFER TO ANOTHER PERSON
If you wish someone else to see this report, send in name with report and the library will arrange a loan.

MANAGED BY
MARTIN MARIETTA ENERGY SYSTEMS, INC.
FOR THE UNITED STATES
DEPARTMENT OF ENERGY

Printed in the United States of America. Available from
National Technical Information Service
U.S. Department of Commerce
5285 Port Royal Road, Springfield, Virginia 22161
NTIS price codes—Printed Copy: A10 Microfiche A01

This report was prepared as an account of work sponsored by an agency of the United States Government. Neither the United States Government nor any agency thereof, nor any of their employees, makes any warranty, express or implied, or assumes any legal liability or responsibility for the accuracy, completeness, or usefulness of any information, apparatus, product, or process disclosed, or represents that its use would not infringe privately owned rights. Reference herein to any specific commercial product, process, or service by trade name, trademark, manufacturer, or otherwise, does not necessarily constitute or imply its endorsement, recommendation, or favoring by the United States Government or any agency thereof. The views and opinions of authors expressed herein do not necessarily state or reflect those of the United States Government or any agency thereof.

ORNL/TM-12145
Dist. Category UC-400

Engineering Technology Division

TECHNOLOGY IN EDUCATION: A GUIDEBOOK FOR DEVELOPING A SCIENCE AND MATH EDUCATION SUPPORT PROGRAM

C. L. Wagner

Date Published—September 1992

Prepared by
OAK RIDGE NATIONAL LABORATORY
Oak Ridge, Tennessee 37831-6285
managed by
MARTIN MARIETTA ENERGY SYSTEMS, INC.
for the
U.S. DEPARTMENT OF ENERGY
under contract DE-AC05-84OR21400

MARTIN MARIETTA ENERGY SYSTEMS LIBRARIES
3 4456 0363135 4

CONTENTS

Page

ACKNOWLEDGMENTS v

FOREWORD vii

ABSTRACT 1

1. INTRODUCTION 1

2. GETTING STARTED 7
   2.1 INITIAL INTEREST SURVEY 7
   2.2 TIMETABLE OF PROGRAM MILESTONES 7
   2.3 INITIAL PLANNING MEETING 9
   2.4 DEVELOPING AND UTILIZING A DATABASE 11
   2.5 MANAGEMENT INTERFACE 13

3. MATCHING NEEDS TO RESOURCES 17
   3.1 EVALUATING RESOURCES 17
   3.2 CONSIDERING CURRICULUM REQUIREMENTS 17
   3.3 CONTACTING SCHOOLS 18
   3.4 DEVELOPING A PROGRAM WITH A SCHOOL 19

4. IMPLEMENTING A PROGRAM 27
   4.1 INTRODUCING TEACHERS TO THE TECHNICAL STAFF MEMBERS 27
   4.2 INTRODUCING STUDENTS TO THE PROGRAM 27
   4.3 WRITING LESSON PLANS 27
   4.4 LESSON PLANS 28
      Animals — Honeybees: Our Best Friends In the Insect World 29
      Area 33
      Astronomy 39
      Atoms — Matter: The Three States of Matter 41
      Computers 43
      Electricity: Static Electricity, Current Electricity, and Magnetism 45
      Energy — Forms (Heat and Electricity) 49
      Energy — Heat Transfer 51
      Energy Types — Field Trip to Bull Run Steam Plant 53
      Engineering as a Career 55
      Environment 57
      Geology — Minerals 61
      Geometry 63
      Graphs 65
      Kinetic and Potential Energy 73

Light 75
Machines — Simple Machines 79
Metrics — SI 85
Sound 87
Word Problems 91
4.5 ADDITIONAL ACTIVITIES 97

5. EVALUATING THE PROGRAM 101
5.1 TEACHER EVALUATION OF THE PRESENTATIONS 101
5.2 STUDENT IMPRESSIONS OF THE PROGRAM 101
5.3 MAKING CHANGES 103
5.4 EVALUATING THE TOTAL PROGRAM 104

6. SUMMARY 109

REFERENCES 113

APPENDIX A. TENNESSEE STATE CURRICULUM FRAMEWORK FOR GRADES K-8 117

ACKNOWLEDGMENTS

Engineering Technology Division (ETD) wishes to acknowledge the support and guidance of Mr. Richard Davis, the Principal of Oliver Springs Elementary School (OSES), and Mrs. Shirley Crass, a third-grade science teacher at OSES. Without their willingness to participate in this pilot program to support education, ETD would not have had the opportunity to share the excitement of science and math with the third-grade students at OSES. ETD appreciates the cooperation of the students themselves, as well as that of the other third-grade teachers.

Appreciation is also extended to Mr. John Jones Jr., ETD Division Director, and Dr. Alex Zucker, Special Advisor to the President of Martin Marietta Energy Systems, Inc., for their encouragement and support. Their belief in the positive impact that an education outreach program can have on a community came from personal experience with local schools.

This program would not have been possible without the input of over 40 ETD personnel who offered their experience, professional knowledge, and time in support of developing and implementing this education program in a local school.

FOREWORD

This report's overall purpose is to provide an easy-to-use guide for any technical organization or school that would like to develop an individualized science and math education support program for use in a local school.

Private businesses, industries, and national laboratories can play an important role in local education systems with a minimal investment in labor and materials. This is accomplished by assessing and utilizing their organization's strengths and resources.

Schools can include science and math enhancement programs at any grade level with little disruption through careful planning. By structuring the program to match technical resources with student and teacher needs and taking the total school calendar into careful consideration, an individualized program can be tailored to flow with the curriculum.

Elementary students need to learn why science and math skills are important — how they come into play in everyday living. School systems can discover what a valuable resource their local technical community can be. The technical community can find out how easy it is to help.

TECHNOLOGY IN EDUCATION: A GUIDEBOOK FOR DEVELOPING A SCIENCE AND MATH EDUCATION SUPPORT PROGRAM

C. L. Wagner

ABSTRACT

Education is vital to survival and success in an increasingly technical world, and the quality of education is the responsibility of everyone — students, teachers, parents, industry, and government. Any technical organization wanting to contribute to that success through its local education system can do so easily and effectively through careful planning.

This report details that planning process and includes methods to (1) identify the interests, strengths, and resources of the technical organization; (2) identify the needs of the local education system; (3) interface with local school system administration, principals, and teachers; and (4) develop a unique plan to match the organization's strengths and resources with the needs of the school system. Following these "getting started" activities is the actual program that the Engineering Technology Division implemented in a local elementary school, including the curriculum, topics, and actual lesson plans used by technical personnel in the classroom. Finally, there are enrichment activities for teachers and students, suggestions for measuring the success of an education support program, and an overview of student responses to questions about the overall program.

---

1. INTRODUCTION

Without a doubt, American students are lagging farther and farther behind in science and math academic performance. Beginning in the middle grades when students are asked to apply basic science and math principles to abstract situations, there is a sharp decline in science and math standardized test scores. Suddenly, students find their interest and enthusiasm bounded by their lack of a solid foundation in fundamental skills. Those declining scores mirror the self-confidence of middle school students. The *National Energy Strategy* reports that, one by one, students wander away from science and math courses until less than 10 of every 1000 students who expressed an interest in science and math in the seventh grade will graduate with a masters degree in a technical field.[1]

A Nation At Risk underscores the need to focus additional efforts in support of science and math education in the lower elementary grades.[2] Since 1983, when *A Nation At Risk* was published by the National Commission on Excellence in Education, over 100 books and reports on America's overall performance in education have come into print. Among those publications is the *Math/Science Education Action Conference, Lawrence Hall of Science Chairman's Statement,* published by the U.S. Department of Energy (DOE) in 1989, which identifies DOE resources to meet some specific educational needs. One of DOE's and its contractors' greatest resources is people: mathematicians, scientists, engineers, and technicians.[3] How do those people fit into the educational process effectively?

In *Science for the Elementary School*, Edward Victor outlines the importance of direct involvement by technical personnel in the teaching of science and math. Students of the early 1800s pursued a technical career through an apprenticeship with a respected, established scientist or engineer. In the late 1800s, apprenticeships began to give way to more "formal" classroom lectures. From this point in U.S. history, Victor charts the uphill/downhill performance of students in science and math and its direct correlation to the presence of technical personnel in the education process. Historically, students have excelled in science when technical personnel have been directly involved in teaching and motivation.[4]

Putting scientists, engineers, and technicians in the classroom provides the answer to every student's questions of "Why do I need to learn those multiplication tables?" and "Why do I need to learn science?" Most elementary students do not understand the function of the basic building blocks of science and math and their purpose in our society (e.g., how citizens can be more responsible consumers if they understand basic facts about such things as energy, light, plants, etc.); therefore, they see no need to learn those skills. Only those students who can envision themselves using those basic skills and can understand the necessity of acquiring basic skills to be able to solve higher-order problems will learn and excel in science and math. For most lower-grade elementary students, hands-on science is seen as fun, and math is tolerated as a burden. There is little understanding of how math becomes the language of science, or how fundamental science and math skills figure into everyday life and careers. Also, students in below-average socioeconomic areas often cannot see themselves venturing beyond short-term, minimum wage jobs. Science is not seen as a part of their everyday lives. For those students, the notion of becoming a scientist or engineer is rather farfetched.

Most elementary schools welcome resources to supplement their curriculum, and most industries are willing to be a resource. But industries and business are often unsure about their role in education. Labor dollars are also a factor for local businesses. They want to know: "What will it cost?", "How many labor dollars must be invested in planning and preparation?", and "Can we really make a difference?" This report will assist any business or industry that employs scientists and engineers in (1) identifying key personnel to work in the school, (2) assessing the needs of the local school system, (3) using their existing resources to minimize materials and labor costs, (4) using and modifying lesson plans within the report for their own classroom presentations, (5) providing teacher enrichment activities, and finally, (6) measuring the success of their program. The report can also be a useful tool for schools that wish to solicit the involvement of local industries, and it can be modified to fit the needs of any elementary school.

Students need a reason to learn. Schools need to see what a valuable resource their local technical community can be. Industry needs to see how easy it is to help.

Oliver Springs Elementary School first period, third grade science class.

2. GETTING STARTED

2.1 INITIAL INTEREST SURVEY

Developing an educational support program within industry provides an opportunity for all personnel to be equal contributors. The personnel can design a program based on their own strengths and resources. A brief initial interest survey sent to all employees will indicate the level of interest. The survey should have

1. a brief introduction from the organization's administration indicating support for area education and the desire to become an effective resource to local schools, and
2. no more than one or two questions for the employee to answer (e.g., "Would you be interested in participating in any aspect of an education support program, such as planning, making presentations, serving as a consultant, etc.?"), plus a line for the employee to write his or her name and mailing address.

The interest survey for Engineering Technology Division (ETD) consisted of these two items and had a return address preprinted on the reverse side of the page. Employees could answer the question, fill in their name and address, fold and staple the form, and place it in the interoffice mail system.

2.2 TIMETABLE OF PROGRAM MILESTONES

When an industry receives positive responses from its employees indicating a genuine interest in participating in an education support program, both management and employees need to develop a timetable of events for planning and implementing their program in a local school system. ETD's initial interest survey was sent out on January 31, 1991, and its first classroom presentation was on October 8, 1991. During that 8-month developmental phase, many activities took place.

Those activities, and the sections of this report represented by the activities, are provided in the following table as a general guide.

Timetable of Program Milestones	
Date	**Milestone (Reference Report Section Number)**
January 31, 1991	Initial survey distributed (2.1)
February 7, 1991	Survey responses received (2.3)
February 13, 1991	Initial planning meeting of interested staff members (2.3)
February 20, 1991	Detailed survey form distributed to education team members (2.3)
April 15, 1991	Team members responses compiled in database (2.4)
April 29, 1991	Results from preliminary needs survey of area schools (2.5)
May 1, 1991	Meeting with school principal (3.3)
May 6 and 13, 1991	Meetings with classroom teachers (3.4)
May 22, 1991	Received curriculum framework from State Department of Education (3.2 and Appendix A)
June 26, 1991	Team planning meeting to sign up for presentations and finalize program details (3.4)
July 23 and August 5, 1991	Meetings with classroom teachers to finalize program and schedule of presentations and other support activities (3.4 and 4.5)
September 24, 1991	Schedule of presentations distributed (3.4)
October 2, 1991	Tour of ETD by classroom teachers (4.1)
October 7, 1991	Introduction of students to program (4.2)
October 8, 1991	First classroom presentation (4.4)

2.3 INITIAL PLANNING MEETING

Response to ETD's initial interest survey exceeded 20% of the division population. Those employees were invited to an initial planning meeting to discuss what education activities that employees had been involved in, what new activities should be pursued, and basic philosophies on science and math education.

ETD employees had been involved in a wide variety of science and math education activities. Most all of those activities were seen as beneficial to students to some degree, but, when the time investment was factored in, some activities rated much higher than others. Class lecture stood out as one activity everyone used frequently, felt comfortable with, and could prepare for easily.

Attendees then discussed education activities that they would like to consider incorporating into an Education Program. Above all, everyone agreed that they wanted to

1. establish a direct involvement with a local elementary school needing assistance,
2. begin with a small program and expand gradually,
3. initiate a program in the lower elementary grades (third, fourth, or fifth grade), and
4. be a continuous presence, a true resource, throughout the school year.

The initial planning meeting concluded with a discussion of general philosophies and suggestions. Several attendees related personal incidents that led them to pursue a career in science or engineering. These philosophies became the heart of the Education Program and served as a focus for the goals and activities that would take shape in the coming months.

From that meeting, the survey form that follows was developed and used to structure a simple database.

Check all activities in which you have participated, and number by priority (1 = top priority) the top 5 activities you feel could best utilize ETD's resources:

Participation	Priority	Specific Activities (time involved)
		Inventor's Fair or Science Fair (1/2 day)
		Class lectures (1/2 day)
		Coach Math Team (Sat. 1-1/2 hrs. for 3 mos.)
		Scouting Resource (merit badges) (1-1/2 hrs.)
		Science By Mail - WATTec-sponsored
		ANS-sponsored in-service for teachers (1/2 day)
		STRIVE (see attachment for program description)
		YWCA courses for students and adults
		Tutoring - one-on-one with student (varies)
		Career Day - University and High School (1 day)

Number by priority the top 3 activities you would like ETD to be involved in:

Priority	Specific Activities to Consider
	Redirect surplus DOE equipment to local schools whenever possible
	Bulletin board data base of ORNL resources (people)
	Computer and software use - train and assist teachers
	Develop special project to present in classroom
	Adopt school (or schools) for direct classroom involvement

Meeting participants offered these suggestions and philosophies. Number by priority the top 3 you feel deserve our attention:

Priority	Curriculum-level Suggestions and Philosophies
	Stress fundamentals of math and science throughout the curriculum
	Encourage and motivate curiosity
	Develop better ways to challenge students
	Work toward eliminating learning obstacles
	Capitalize on learning readiness opportunities
	Other (specify):

All suggestions are welcomed and encouraged.

Name:_____

2.4 DEVELOPING AND UTILIZING A DATABASE

The survey form is a direct reflection of the database structure that was developed for ETD's Education Program using dBASE software. Survey responses were keyed into the database, and the totals were then imported into graphics software for presentation in bar chart format. As with any survey, a high percentage response rate is necessary for the database to be a true reflection of interests and opinions of a group.

Response to this second survey form in ETD was 100% of all employees who expressed a desire to be part of the ETD education team. These employees were invited to a second planning meeting to discuss the following survey results:

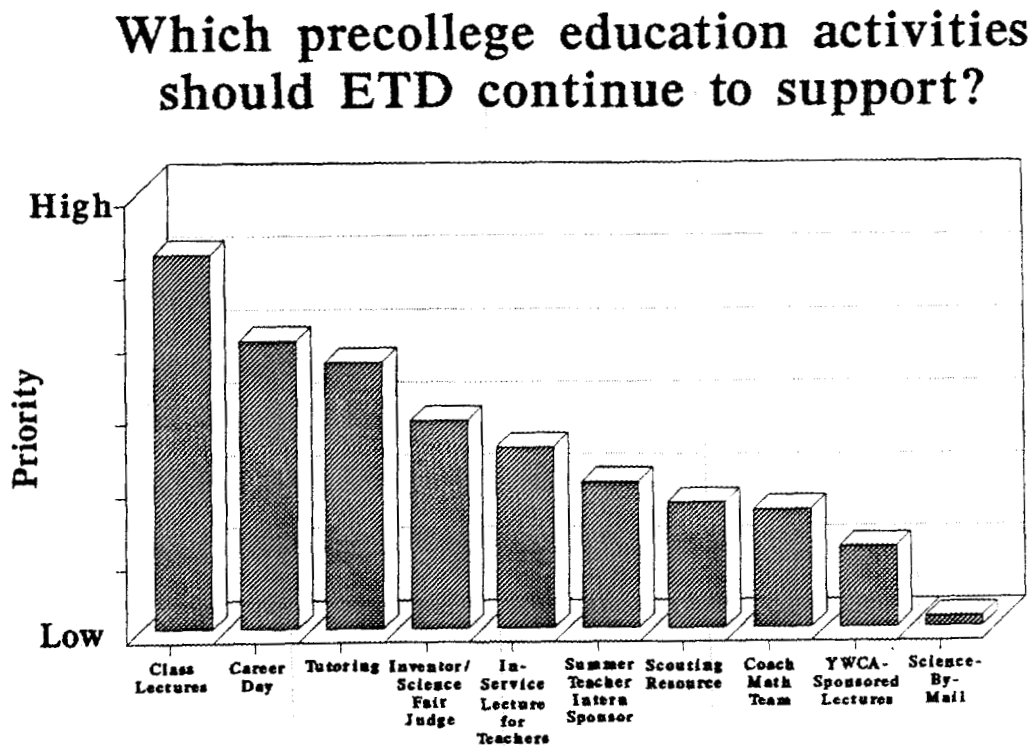

What do ETD employees want to do in precollege education?

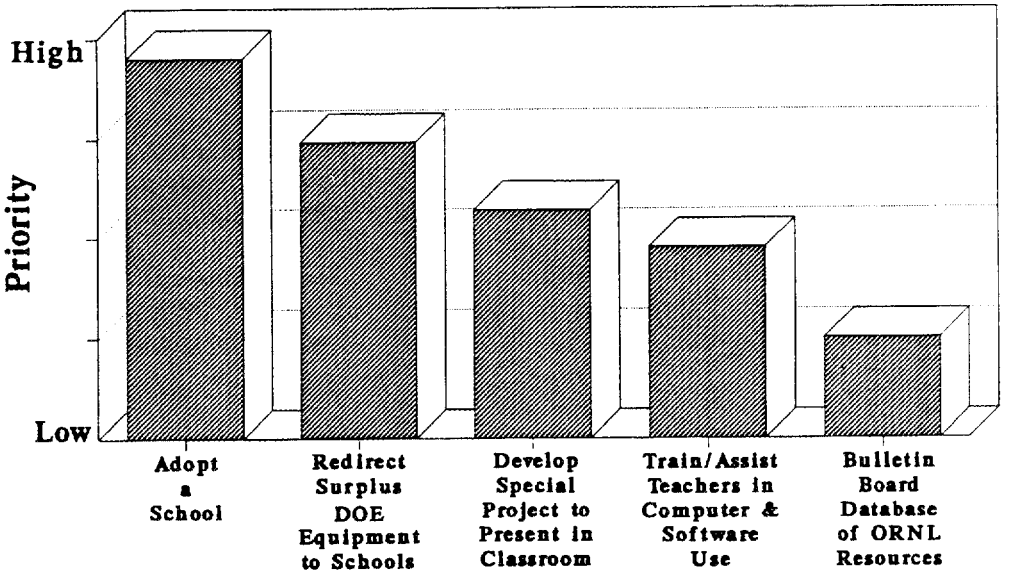

Curriculum-Level Suggestions and Basic Educational Philosophies:

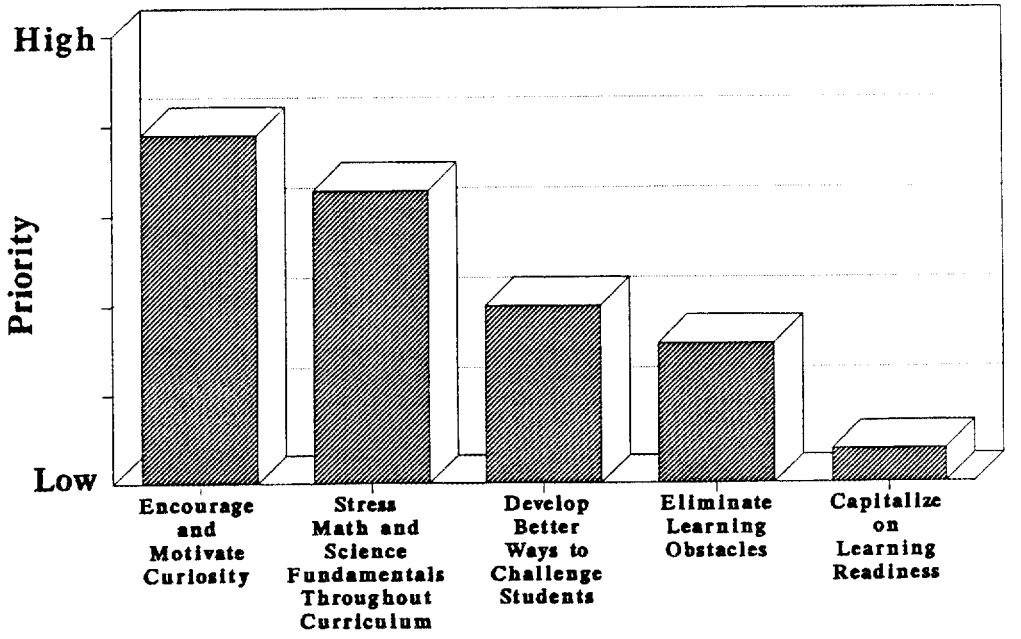

Team members thought that the survey results were an accurate reflection of their opinions. Using a survey that was developed by a group, had numeric responses, and was interpreted using a database helped to eliminate as much bias as possible. During this second planning meeting, team members expressed a desire to become closely associated with an economically disadvantaged elementary school, to concentrate initial efforts in primarily one grade, and to plan to expand our support to other grades in coming years. Too often a business or industry will begin a large program with a school and leave promises and expectations unfulfilled. Such efforts leave schools reluctant to begin a working relationship with an outside organization.

As the bar charts indicate, team members wanted to capitalize on their presentations skills through lectures/lessons in the classroom. Being in the classroom provides students the opportunity to learn about science and math from people who practice science and math in their careers. Classroom presentations also afford the opportunity for the scientist or engineer to bring into the classroom some of the equipment and instruments used in connection with the topic being addressed and allow the students to experience "hands on" science and math. The classroom teacher also has the opportunity to meet the professional, establishing a contact that will be a valuable resource, as well as observing new and different ways to present basic science and math concepts.

Team members felt that classroom presentations would be an ideal mechanism to encourage and motivate students to learn basic skills. By seeing those basic skills put into practice during the lesson and by hearing how the presenter uses those basic skills in a job and at home, students can begin to realize that science and math does have a place in their lives. More students should be able to say, "Hey, I really will use those multiplication tables after all." Presenters can tap into children's natural curiosity and draw them into the wonders of science that extend far beyond the pages of their textbook.

2.5 MANAGEMENT INTERFACE

Statistical results of the survey were formulated into a program proposal to ETD Management. When a program such as this is founded and directed by personal opinions, it becomes imperative to reflect those opinions as data rather than feelings.

To facilitate the process of formulating interests and strengths into an effective program, it is beneficial for an individual within the organization to serve as a program

coordinator. This person facilitates the establishment and operation of the program by organizing the planning meetings, interacting with the school and organization management, interfacing with the education team members, and coordinating the schedule of presentations and other activities.

ETD Management was in full agreement with the overall goals and direction of the team, and instructed the coordinator to collect the following information on local elementary schools:

1. need of student population for additional support programs,
2. student population of possible target grade, and
3. driving distance to the school.

The need of a student population for additional support programs can be gaged by the State-funded support services for which the school qualifies, such as a Free Lunch Program and special reading and math programs. This information is readily available from the office of the School Superintendent.

Student population is an important consideration in terms of the labor and materials required for the program. Classroom lessons are much more manageable and effective if they are limited to the size of one class: 20 to 28 students. Allowing for 30- to 40-minute presentations for each class, it is easy to calculate what population size to target. If each presenter can devote a full day at the school, then a single-grade population size of 90 to 140 students is possible. If the presenter can only devote a half day at the school, then the industry should look for a school with a single-grade population size of 50 to 80. For this initial support, ETD Management was willing to allow a half day at the school for each presentation, which limited consideration to only elementary schools with a single-grade population of 50 to 80 students.

Location of the school is an important factor in terms of travel time and employee participation. Time spent on the road is time that could be spent in the classroom with students and teachers. Division Administration asked that nearby schools with economic need be given first consideration.

By taking these three factors into account, the number of local elementary schools open to consideration was narrowed from five to two. It is important for any industry to examine its resources and focus on specific goals when developing a science and math education support program. It is equally important that the education program reflect the opinions of both administration and employees for the program to be successful.

Presenter explains the function of various components of a computer.

3. MATCHING NEEDS TO RESOURCES

3.1 EVALUATING RESOURCES

Without question, every industry's greatest resource is people. As an education program begins to take shape, the coordinator should review the list of interested participants and begin to summarize the team's obvious strengths (e.g., chemistry, biology, mathematics, engineering, etc.). Other strengths will become apparent later on in the planning process, but for the moment, the coordinator needs a short mental list of those science and math subjects that the team can address.

In addition to the people, other resources can become part of an education support program. It is possible that the industry might allow equipment to be used during classroom presentations or allow the use of its library. Vendors and subcontractors working with that industry might also be willing to contribute materials or resources.

3.2 CONSIDERING CURRICULUM REQUIREMENTS

Matching needs to resources is a key element in a successful education support program. Before sitting down with school representatives to discuss specific needs, industry should know what the State curriculum requirements are for the local school district. The State Department of Education can provide a curriculum guide or framework for any or all elementary grades (see Appendix A); it outlines objectives and level of complexity for each grade.

Reviewing a complete curriculum may seem time-consuming, but at this point in the education support planning process, it is necessary to find out

1. at what grade level are specific science and math concepts introduced,
2. at what grade level are students expected to be proficient with certain concepts, and
3. in what grade level are the majority of the team's "strengths" found.

Just as technical literature is filled with scientific words and expressions, educational material is also filled with phrases most meaningful to other educators. Ideally, someone in the industry's Education Support Program will have experience in the field of education and

can facilitate the interpretation of the curriculum and can assist in the matching of needs/requirements and resources.

As ETD researched the Tennessee State Curriculum Framework, most of the division's "strengths" fell in the upper elementary grades' State Curriculum Framework — too late to reach those students failing in math and science. The coordinator then carefully reviewed the Curriculum Framework for the lower grades and found those same "strengths" are taught early, at a much more fundamental level. Many of the scientists and engineers in ETD initially worried, "How can I relate what I do on my very complex project to third or fourth graders?" When those same scientists and engineers later reviewed the student textbooks, they found that their very complex projects did, in fact, utilize the basic science and math skills that students were learning in the third and fourth grade!

3.3 CONTACTING SCHOOLS

Selecting a local school with which to begin a working relationship is, perhaps, the most difficult part of developing an education support program. Specific goals and objectives, such as those mentioned earlier, that will direct industry's decision are essential. Beyond a school's needs, and beyond an industry's resources, lies one critical ingredient: the school's desire to form a working relationship with industry. Some schools have been left disenchanted by past "partnerships" with industry that became nothing more than a plaque on a wall in the school office. Other schools are discouraged by their local school board or individual school administration from venturing beyond current programs. When the list of schools to consider has narrowed, narrow it further by including only those schools that are truly open to support from industry and eager to take on the challenge of improving science and math education in their school.

The program coordinator should plan to meet with the principal and/or curriculum coordinator of each school under consideration and briefly explain

1. what type of science and math support program industry can offer (such as classroom presentations),
2. what topics can be addressed (including grade levels),
3. what additional resources might be available, and
4. how industry plans to expand or continue the program in future years.

After the coordinator has explained what industry has to offer, it is important to ask the principal if that school has

1. specific needs in certain areas of science or math, or
2. a particular grade level that needs additional help.

Interviews with the schools' principals and answers to these questions will guide the selection process.

3.4 DEVELOPING A PROGRAM WITH A SCHOOL

Once a school or school system is chosen, the details of the program can begin to take shape. Everyone should take equal part in the program's design. Teachers, administrators, professionals, and students can all make positive contributions.

ETD began this phase of the planning process by talking with the principal of the local elementary school that was selected. The principal thought that the third grade had the greatest need for such a support program and suggested that ETD consider beginning the program in that grade. Third grade is an excellent choice for beginning a science and math program for several reasons. Students usually enter the third grade able to "read to learn" — that is, their reading skills support learning through reading rather than spending most of the school day "learning to read." Third graders still have a natural curiosity for science and math concepts that has not been dampened by textbooks and standardized tests. At the third-grade level, most students have not yet been discouraged by perceived "failures" (low test scores) and are not hampered by a poor self-image of their performance in science and math.

Representatives from ETD then met with the third-grade teachers to explain what could be offered in support of science and math. Those teachers were asked to create a "wish list" of science and math topics that they would like to see developed into presentations by ETD personnel. Topics submitted on that list were ones that were poorly covered in the textbook, were difficult to convey to the students, or for which no equipment or materials were available. The teachers looked over the school calendar and decided how many presentations could be accommodated and the best day of the week for presenters to come to the school. The school calendar not only served as a guide in scheduling the presentations, but also directed the timing of certain topics (e.g., a presentation on the environment during Earth Week). The teachers were given total control of the "wish list" of possible topics to be covered, the scheduling, and the frequency of presentations. ETD made sure that the

teachers understood that each presentation would serve only as a supplement/enhancement to the regular classroom lesson and in no way replaced or contradicted the standard curriculum.

The ETD coordinator then took the teacher's "wish list" and paired each topic with its objective from the curriculum framework. This information was put into table format and used as sign-up sheets at the next meeting of all ETD staff members interested in participating in the education support program. That list was as follows:

Science Topics

YOUR NAME	TOPIC	SKILL/OBJECTIVE
	Animals - Ant Farm	Basic concept of habitat; how habitats can be preserved
	Animals - Bees	Habitats, colonies; services performed by bees
	Animals - Caterpillars	Life cycle; impact of technology on environment
	Astronomy - Eclipse	Composition of solar system
	Atoms	Basic components (protons, neutrons, electrons) and theory
	Electricity	Static electricity, current electricity, magnetism
	Geology - Local Minerals	Kinds (sedimentary, igneous, metamorphic) and how they are formed
	Geology - Volcano	Geothermal energy; factors which cause changes in earth's surface
	Light	Properties of light
	Machines	Identify simple machines (lever, wheel and axle, inclined plane, pulley) and how they use energy; potential and kinetic energy
	Roots - Medicinal Uses	Folk medicine
	Skeletal System	Any related topic - need to introduce students to skeletal system (use life-size human skeleton model in lab)
	Sound	How sound travels
	Energy	Forms (heat, electricity) and how they are produced
	Energy	Types (fossil fuel, natural gas, nuclear, solar, wind) and conservation
	Energy	Heat transfer

Math Topics

YOUR NAME	TOPIC	SKILL/OBJECTIVE
	Fractions	Equivalent fractions, comparison of fractions, applications and operations
	Graphs	Pictographs; bar graphs - graphic construction
	Measurement - Area	Perimeter and area - as measured in both standard and metric units; operations involved
	Measurement - Distance	Fractions of an inch; foot, yard, mile
	Measurement - Geometry	Basic geometric figures (triangle, rectangle, square, circle) and elements (lines & segments, rays, angles)
	Measurement - Volume	Cup, pint, quart, gallon
	Measurement - Weight	Ounce, pound
	Metric	Linear measure (centimeter, meter, kilometer) and weight (gram and kilogram)
	Money	Counting change (coins through 10-dollar bill)
	Multiplication	Properties and computation (through 9 as a factor)
	Temperature	Degrees Fahrenheit and degrees Celsius (metric)
	Word Problems	How to determine the answer the students are looking for and the operation needed to find that answer
	Computers	Basic functions of a computer system - hardware and software; applications

Using those signup sheets, the following schedule was developed by the teachers and the ETD coordinator:

1991-1992 Calendar for Presentations by Engineering Technology Division Staff Members

Date	Topic	Presenter
October 8	Astronomy - Solar System	Kent Williams
October 15	Atoms - Matter	Moshe Siman-Tov
October 22	Graphs	Cathy Wagner *
October 29	Energy - Forms (heat and electricity)	Brian West
November 5	Energy - Heat Transfer	Howard Kerr
November 12	Energy - Heat Transfer	Grady Yoder
November 19	Word Problems - Addition and Subtraction	June Cook *
November 26	Energy Types - Field Trip (Bull Run Steam Plant)	George Murphy
December 3	Electricity	Bob Staunton
December 10	Machines - Simple Machines	Jim Corum
December 17	Machines - Kinetic and Potential Energy	Tim Theiss
January 14	Metric	Uri Gat
January 21	Word Problems - Addition, Subtr., Mult., Div.	Therese Stovall
January 28	Geology - Minerals	Dan O'Connor
February 4	Sound	Bob Staunton
February 11	Light	John Tomlinson
February 18	Engineering as a Career (Natl. Engineer's Week)	Brigham Thomas
February 25	Measurement - Geometry	Daryl Cox
March 3	Environment	Sandra Kennedy
March 10	Animals - Bees - Habitats	Howard Kerr
March 17	Computers	Randy Hudson*

* Backup Presenter.

It is important that an education support program not be disruptive to the learning process. The ETD Calendar for Presentations took the following information into consideration:

1. the state curriculum,
2. the textbooks and the concept of sequential learning,
3. the school calendar for special events, and
4. the teachers' own methods and order of presenting topics.

Throughout the school year the calendar remained somewhat flexible. One new topic (Engineering) was added when a team member received a wealth of material and a videotape from the American Ceramic Society promoting National Engineer's Week. Two presenters swapped presentation dates due to business travel conflicts. Three staff members were designated as "backup presenters" and could be called on by any of the other presenters in the event of an unforseen absence.

Through these steps, the ETD Education Support Program fell into place. ETD team members were given support by the Division Administration. Teachers received valuable in-service credit points from the county school system for their time spent in planning meetings. Careful consideration to the amount of time devoted to planning was given so that the time available for working in the classroom with students and teachers would be maximized. All who participated in the planning process made valuable contributions. Needs were expressed, and resources were offered.

Oliver Springs Elementary School second period, third grade science class.

4. IMPLEMENTING A PROGRAM

4.1 INTRODUCING TEACHERS TO THE TECHNICAL STAFF MEMBERS

Before making classroom presentations, ETD invited the classroom teachers to tour its facilities at Oak Ridge National Laboratory. The teachers spent the morning meeting the staff members who would be coming to the school and toured their workplaces. Presenters had this opportunity to talk with the teachers about the presentations that they were developing and ask general questions about the students and classroom environment. The teachers became more familiar with the applications of basic science and math skills in current technology and gleaned ideas for teaching. The tour proved to be a good first step for beginning the school year.

4.2 INTRODUCING STUDENTS TO THE PROGRAM

While it is important for teachers and presenters to get a good start, it is equally important for the students to feel comfortable with a new program. The day before the first presentation was made, the ETD coordinator went to the school and talked informally with each of the three classes of third graders. The coordinator began her discussion with the students with an introduction of herself and how she used science and math in her job. She explained that once each week, someone would be coming to their class to present a lesson on science or math. The coordinator encouraged the students to feel at ease with the presenters and to ask questions. The coordinator also talked with the students about their perceptions of science and math — what activities could they remember doing in the previous grade and how basic skills were used. The answers to those questions would later be repeated in a followup evaluation discussion with the students at the conclusion of the program.

4.3 WRITING LESSON PLANS

For each lesson presented, a detailed lesson plan was developed by the ETD presenter. Before the lesson, the plan was given to the classroom teacher for her information and input and to the ETD coordinator as a quality assurance check.

During the team planning meeting in which attendees signed up to make presentations, the coordinator distributed a sample lesson plan. The group members discussed the importance of having a lesson plan both as a guide for themselves and a guide

for other technical personnel who might want to present that same lesson in another school. Sixteen manhours were allocated to each presenter for each lesson to include developing the lesson plan and gathering additional information and/or materials for presenting the lesson.

The section that follows is made up of the lesson plans developed by ETD team members. Each lesson plan contains these key elements: title, clear objective, materials needed, and a description of the lesson. A clear objective shows that the lesson is addressing a specific skill and should explain what the students will learn. The list of materials will remind the presenter what he or she needs to have in the classroom for the lesson — some items the students will have on hand, some items the teacher may have, and some items the presenter will need to bring. The lesson itself should begin with an introduction of the presenter and an explanation of how he or she uses basic science and math at work. There should be a detailed description of the presentation so that another professional could easily take the lesson plan and make a similar presentation. Finally, the lesson plan should include time at the end of the class for questions and discussion — a time when the students can truly explore the concept that was presented.

A good lesson plan will resemble a recipe, stating what food for thought is to be prepared, what ingredients are needed, and what steps to follow in the preparation. Please feel free to use the lesson plans that follow in your own education support program.

4.4 LESSON PLANS

The coordinator secured copies of the science and math student and teacher textbooks for use by team members in developing their lesson plans. In addition, the following books proved helpful:

1. M. Berger and C. Croll, *Switch On, Switch Off*, HarperCollins, New York, 1989.
2. J. Cassidy and The Exploratorium, *Explorabook, A Kid's Science Museum in a Book*, Klutz Press, Palo Alto, 1991.
3. J. Long and V. McKissack, *Why Is the Sky Blue?*, Gallery Books, New York.
4. National Geographic Society, *How Things Work*, 1983.

Animals - Honeybees: Our Best Friends in the Insect World

OBJECTIVE
Students will learn the characteristics of honeybees and understand the important pollination functions that they serve through their activities.

SUPPLIES
Instructor/beekeeper will need:

- Beehive with combs and honey
- Two or more varieties of honey to be sampled by students (and a supply of coffee-stir sticks for sampling)
- Observation colony (live honeybees in a glass box)
- Beekeeping equipment (smoker, veil, etc.)
- Posters and charts showing the anatomy of a honeybee, photos of bees and their activities (commercially available from Dadant and Sons, Inc.)

LESSON
During the lesson, the beekeeper will utilize the supplies listed above to reinforce the following information about honeybees.

General Information
There are many types of bees; all obtain their food directly from plants. Bees common in this area include honeybees, bumble bees, carpenter bees, alkali bees, leafcutter bees, and stingless bees.

The female bees usually have venomous stings or bites. The males do not have venomous stings.

The honeybee females have barbed stingers; all other stinging insects have smooth stingers. The honeybee stinger remains stuck in the victim, and the bee dies after stinging. Other insects are able to insert and remove their smooth stingers and can sting multiple times.

Some bees are social insects. This means several individuals live in a common nest and share work responsibilities for the benefit of the entire colony. Honeybees are social insects.

Some bees are solitary insects. This means that each adult female queen starts her own nest and does all the work necessary to maintain the developing brood. Leafcutter bees are solitary bees. Usually, the population of solitary bees in a nest is much smaller than the population of social bees in a nest.

All bees provide an important service to the plants on which they forage for food. The bees visit the flowers of the plant and transfer pollen from the male parts of the flower to the female parts. This transfer of pollen is called pollination; pollination is an essential step in the production of fruits and vegetables.

Honeybees are the most important pollinators in the United States because

1. the colony has large numbers of foragers,
2. honeybees are easily managed and moved to the crops to be pollinated,
3. foraging honeybees will visit only one type of flower on each trip - a trait called flower fidelity, which is extremely important.

Honeybees

- Three Castes:

  Queen:
  - sexually fully developed female
  - lays eggs
  - has smooth stinger-used only for survival fights with sister queens
  - secretes chemical substances (pheromones) vital to colony function

  Worker:
  - sexually undeveloped female
  - secretes beeswax and builds the combs
  - defends the nest; has barbed stinger
  - cares for and feeds the young brood and the queen
  - collects food (nectar, pollen, and water)

  Drone:
  - male
  - mates with young queens
  - does no work for the colony

- Activities of the Bees

  In the hive:
  - beeswax combs are used for food storage and raising brood (i.e., young bees)
  - queen lays about 1500 eggs per day during flowering season (this is 1 1/2 times her body weight)
  - queen secretes a pheromone that is shared by all workers in the hive. This uniquely identifies the bees belonging in that hive.
  - guard bees (i.e., workers) attack anything that threatens the hive.
  - workers store vast amounts of honey and pollen in the combs above the brood nest.

  In the fields:
  - workers forage for nectar and pollen from blooming plants.
  - workers also collect water that is used to cool the hive.
  - workers also collect resins from trees to make propolis or bee glue that is used to build the nest.
  - workers forage during daylight hours only. They remain in the hive during the night.

- Products Made by the Bees

  Honey:

  is a supersaturated solution of simple sugars with about 18% water. It is made from complex plant sugars in the nectar collected by the bees from flowers. The bees add enzymes to the nectar that cause the complex sugars to change into

simple sugars. The bees store the changing nectar in the combs and fan their wings to evaporate the water from the nectar thus producing honey. Honey provides carbohydrates for the bees. The colony usually produces much more honey each year than is needed by the bees. The surplus honey is harvested by the beekeeper and can be considered as rent on the beehive.

Pollen:
is collected on the hair of the honeybees as they visit flowers. Part of the pollen is transferred to the female part of the flower; this transfer of pollen is called pollination. The rest of the pollen is carried by the bee back to the nest. The pollen is placed in the combs and provides the bees with vitamins, minerals, and proteins. A normal colony will collect several bushels of pollen each year.

Beeswax:
is secreted from wax glands on the abdomen of the worker bees. The tiny platlets of wax are formed into the hexagonal cells of the honeycomb. Beeswax is also used to cap cells of honey.

How To Avoid the Pain of a Bee Sting

The worker honeybee usually stings only when defending the colony or defending itself. The stinger is barbed and remains stuck in your skin when you are stung. The sting injects venom into your body that causes pain, itching, and swelling. These conditions usually last for two or three days. Unfortunately, the worker honeybee dies after she stings you.

You can avoid bee stings by

1. staying away from the nests of honeybees; the guard bees will sting anything that disturbs the nest.
2. wearing shoes when walking in the grass. If you step on a bee, the bee will try to sting.
3. keeping foods covered and looking at food and drinks before you put them into your mouth. A sting in the mouth is very painful. Sweetened foods taken outdoors are very attractive to bees, especially when very few flowers are in bloom.

If you do get stung by a honeybee, the sting mechanism will be very visible sticking to your skin. Scrape the stinger out with a knife, piece of paper, or fingernail. DO NOT PULL THE STINGER OUT WITH TWO FINGERS.

The Beehive

Honeybees like to build their nest in a cavity. There are two basic types of nest sites:

1. Bee tree: a tree that contains a cavity of 20 to 40 liters may be chosen as a nest site by a colony of bees.
2. Beehive: a man-made structure consisting of wooden boxes that form a cavity of at least 40 liters. These boxes are called supers. Several supers can be stacked on top of one another to make a very large nest size.

Beekeeper

A person who provides beehives for bees to live in and who takes care of the bees is called a beekeeper. An Apiarist is another name for a beekeeper.

Equipment Used by the Beekeeper

Protective Clothing — worn by beekeeper to prevent being stung when working in the beehives:

helmet and mesh veil
leather gloves
high-top shoes or boots
coveralls

These protective items are used by the beekeeper to prevent being stung when working in the beehives.

Smoker:
A metal can with attached bellows that forces air through the can. Some combustible natural material such as pine needles or cotton cloth is burned in the smoker to produce a heavy cool smoke. The smoke calms the bees and stimulates them to go into the hive and eat some honey. Smoking the bees helps the beekeeper keep the bees calm while the beekeeper is working with the hives.

Hive Tool:
A tool used for prying open the beehive. The bees glue all hive parts together with propolis, or bee glue, and they are not easily separated without a hive tool.

Several other types of special equipment are used by the beekeeper to remove honey from the hive, process the honey, move the hive to another location, and many other tasks.

Swarming

Swarming is a natural reproductive act of the colony of honeybees. Before swarming, the workers build special cells in which new queens are raised. Just before the new queens hatch from their cells, the old queen and about half of the workers leave the beehive in search of a new nest site. This group of bees is called a swarm. The swarm often lands on a tree limb or some other nearby object while foraging workers search for a new nest site. When a suitable site is found, the swarm flies to that location and begins building a new nest of beeswax combs. Thus a new colony of honeybees is established. Meanwhile back at the original colony, the emerging virgin queen engages in mortal combat until only one survives. The surviving queen flies out of the beehive to mate with several drones. When she returns to the hive, she will begin egg laying and all other functions of the queen. The original colony can continue to exist, and a new colony has been established by the swarm.

Area

OBJECTIVE
Students will be able to calculate the number of square units needed to cover a region.

SUPPLIES

Each student will need:	1 2-sided Handout of word problem on front and floor plan on back 1 Handout of 1-inch grid Scissors Paste or glue Pencil
Instructor will need:	1 3-dimensional model of likeness of floor plan 1 Handout of 1-inch grid Scissors

LESSON

1 - Instructor should introduce self to students and explain how this math skill is used in his or her job (or related task).

2 - Define key words with students:
Area - The number of square units needed to cover a region.
Square - A rectangle with four equal sides and four corners.

3 - Distribute two handouts, and read first two paragraphs of word problem together with students. Turn over to floor plan, and restate the second paragraph as students look at their copy of the floor plan.

4 - Ask how many students have seen a floor plan before, then show 3-dimensional model of floor plan and discuss how their 2-dimensional paper copy is representative of the model.

5 - Explain that students are to cut out a "carpet" from the grid handout and paste on bedroom floor. Ask if students know how to figure how many carpet squares will be needed (addition, multiplication) and explore options. Have students cut and paste "carpet" onto bedroom floor; wait till everyone has finished.

6 - Ask students to turn handout over to word problem on front. Together, read the last paragraph. Allow students to calculate answer and write it in the blank. When all have finished, ask for answer and methods of calculation.

7 - As time permits, ask for questions. Suggested follow-up discussion questions:
What other tasks involve the need to calculate area? (construction, painting)
What other careers might involve the need to know how to calculate area? (carpenter, painter, engineer, interior designer, etc.)

ENRICHMENT ACTIVITIES

Activity 1

For classrooms with tile floors: In teams of two students each, find the number of floor tiles used to cover the classroom floor. One student should count the number of tiles along wall, the other student should count the number of tiles along the adjoining wall, and they both should multiply their two numbers to find the answer. (Teacher may need to help if room is not rectangular in shape.)

Activity 2

Using square sheets of white paper and crayons, have each student draw people measuring the area of things. Tack the illustrations to the classroom bulletin board, and count the number of square units needed to fill the board (additional illustrations may be used to cover a door or other area).

Activity 3

Each student needs:
- 1 Shoebox
- 1 Small, plastic action figure (or make popsicle-stick figures)
- 1 Sheet of wallpaper slightly larger than bottom of box
- Scissors
- Paste or glue

Ask students to make a home for their figure and "carpet" the floor using the wallpaper. Before they paste the wallpaper "carpet" down, ask them to measure the edges in inches and use multiplication to figure (to the nearest inch) the number of square inches needed to "carpet" the floor. Ask the students to paste down the "carpet," and add windows and doors and a roof (may use shoebox lid).

Buying New Carpet

You have rented a house that needs new carpet in the bedroom. Your landlord said he would buy new carpet for that room if you would let him know how much carpet he needs to buy.

On the back of this page is a floor plan of your house. How many square inches of paper will you need to cover that bedroom floor area?

Pretend that each square inch of paper is really a square foot of carpet. How many square feet of carpet should your landlord buy?

Answer: _____ square feet

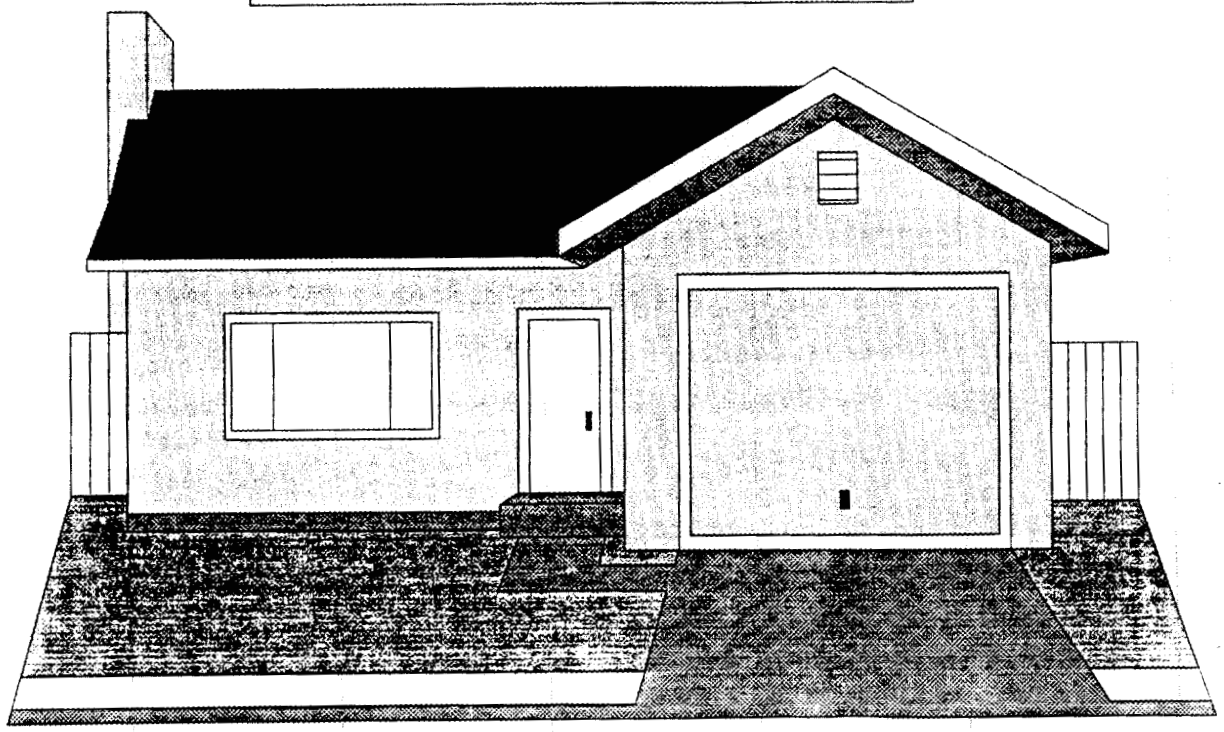

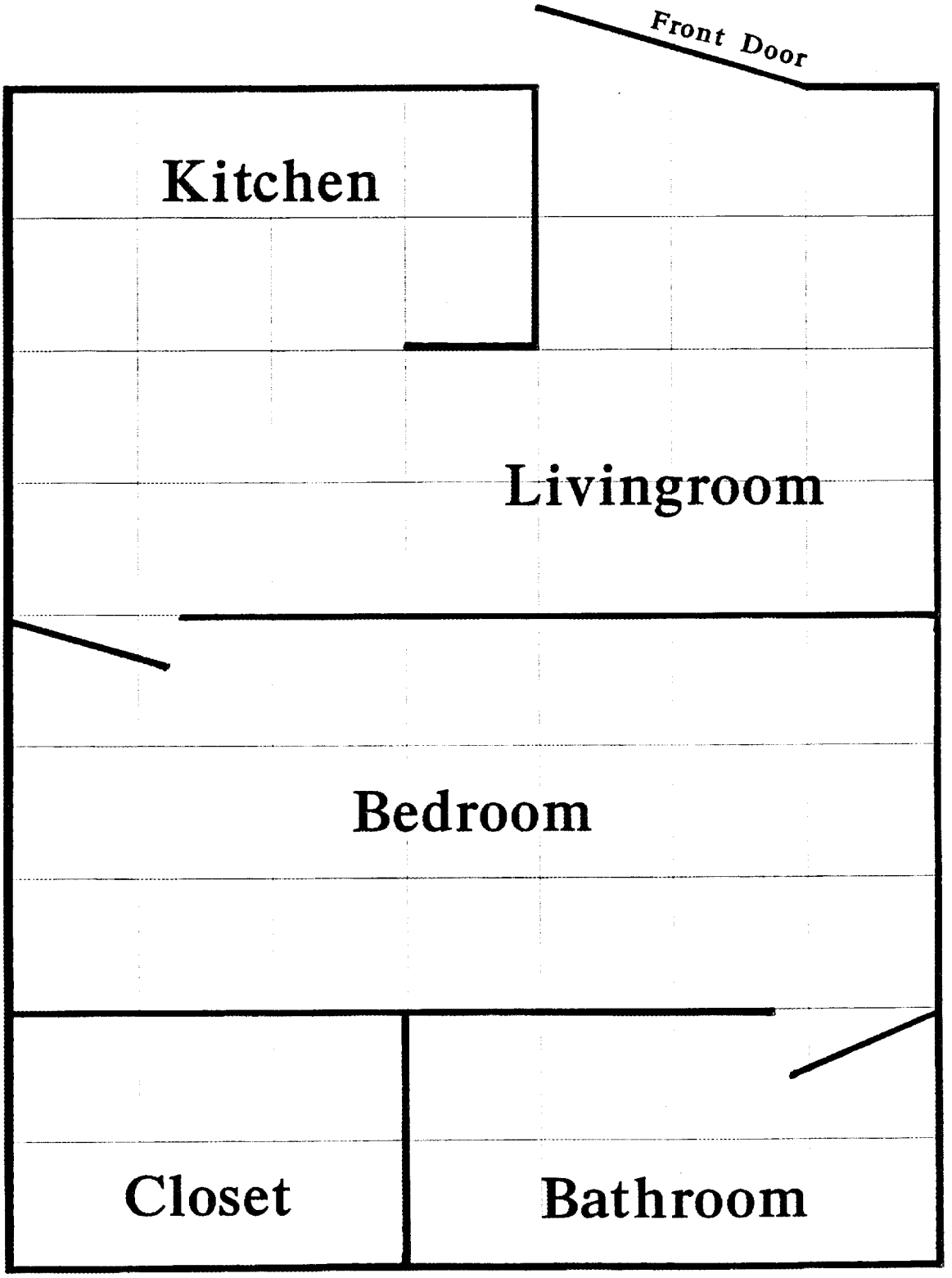
Front Door
Kitchen
Livingroom
Bedroom
Closet
Bathroom

Astronomy

OBJECTIVE:
The students will gain a qualitative understanding of the solar system and the similarities and differences of the eight other planets as compared to earth.

SUPPLIES:

Instructor will need:

Cut-out circular models of planets. (Presenter used a set that was part of a mobile and are based on NASA Pioneer and Voyager photos.)

Set of color slides showing artist's or photographic interpretations of planetary atmospheres and surfaces. [With the permission of Workman Publishing of NYC, presenter made a set of 35-mm color slides based on the beautiful artists renditions in *The Grand Tour (of the Solar System)* by William K. Hartmann and Ron Miller.]

Globe or "Earth Ball" toy (such as "Hugg-a-Planet") and a smaller ball to represent the moon. A large flashlight to represent the sun. These items are used to simulate lunar and solar eclipses.

LESSON:

1 - Instructor should introduce self to students and explain how astronomy relates to his job or hobby.

2 - Ask for ten student volunteers to represent the sun and the nine planets. Starting with the sun and working outward (Mercury, Venus, Earth, Mars, Jupiter, Saturn, Uranus, Neptune, and Pluto), give each volunteer a cut-out planet disk and space them across the room in proportion to the planets actual distances to the sun. Explain how the characteristics of the planets' atmospheres and surfaces depend on their distance from the sun.

3 - Using the color slides take the students on a "Grand Tour of the Planets" starting from the Sun and working outward. Explain how the characteristic of the planets (and their moons) depend on temperature, gases in the atmosphere, presence or lack of water, gravity, etc. Explain what is needed for life to arise and flourish on a planet and why earth meets these conditions. Asteroids and comets should also be explained.

4 - Using the flashlight and earth and moon spheres (plus volunteer students to hold each), demonstrate the conditions needed for an eclipse of the sun and an eclipse of the moon. Near darkness is needed to effectively show the earth's and moon's shadows.

5 - Explain to the students what skills are needed to study and understand astronomy, i.e. computers, mathematics, and science. Mention to students that much of mathematics was developed to better understand and predict the motions of heavenly bodies.

Atoms
Matter: The Three States of Matter

OBJECTIVE
Students will become aware of and learn about the properties and applications of the three states of matter: **solid**, **liquid**, and **vapor/gas**.

SUPPLIES

Each student will need:	Pencil and paper
Instructor will need:	Electric heating plate Sink and faucet Clear pyrex container with loose cover Steam kettle Pin wheel (from the toy store) Thermometer in a transparent container Freezer with supply of ice cubes Molecular model Gloves or oven mitt Long-handle clip (for use with test tube) Balloons Material samples (such as honey, play-dough, etc.)

LESSON

1 - Instructor should introduce self and area of professional work (work location/environment; what type work goes on there), and explain the application of today's topic in work or other context.

2 - Define the three states of matter: solid, liquid, and gas:
- Ask students for examples of each

Show samples of solids, liquids, and gases, emphasizing the basic characteristics of each state and allowing time for the students to tell <u>their</u> observations:
- Solid: fixed shape and volume (resistant to change of either) (e.g., stone)
- Liquid: fixed volume, but loose shape (follows container) (e.g., water)
- Gas: both volume and shape change (both follow container) (e.g., air in room)
- Ask students <u>what</u> they have observed. Ask <u>why</u>.

Show materials with mixed properties:
- Play-dough: solid with fixed volume and shape, but shape is flexible to force
- Honey: solid or liquid? (fixed volume, but shape changes slowly)
- Have any students seen glass objects being made? Discuss.

3 - Explain molecules and atoms in relation to states: interconnections, vibrations, attraction, etc., and their effect on above observed properties. Use molecular model for visualization.
- Definite pattern of molecules in solid, local vibrations
- Addition of heat makes particles move faster and further apart — change to liquid
- Detachment of molecules when changing from liquid to gas
- More heat accelerates the process of melting, boiling, or vaporizing

4 - Perform an experiment showing the effect of heat on temperature and phase change: melt ice, then boil water -- measuring temperatures along the way:
- Ask students to predict what will happen
- Could they observe the melting and boiling points?
- Could they observe the effect of latent heat? (why does that happen?)
- Do all the materials have the same melting and boiling points? Explain.

5 - Perform an experiment showing how ice melts and the water then boils in a transparent pyrex container, where the gas can push a plate or be collected in a balloon on top:
- Ask students to predict, observe, and explain
- Explain phase-change process
- Explain power and conversion to power
- Demonstrate how the experiment could lead to the invention of the "steam machine"
- Explain how this is related to trains, power plants, nuclear energy, and electricity
- Application of energy storage with solar energy

MORE EXAMPLES:

* Whistling tea kettle driving a "turbine" (using a pinwheel)
* Steam condensing on cold spots on whistling tea kettle
* Melting butter
* Condensation on cold cup of ice tea
* Bathroom mirrors becoming foggy
* Morning fog on lakes and rivers
* Drying of cloths in a dryer or in the sun
* Liquid mercury expanding in a thermometer
* A person's breath visible in the winter
* Shaking a coke bottle and letting released gas inflate a balloon covering the neck

ADVICE TO INSTRUCTOR:

Ask many questions. Let students participate as much as possible.
Use plenty of demonstrations/experiments.
Place strong emphasis on how your topic is applied in the "real world."
Coordinate your lesson with the classroom teacher — taking care to compliment, not substitute.

Computers

OBJECTIVE
Students will learn the basic components and operation of a Personal Computer (PC).

SUPPLIES

Instructor will need:	PC including monitor, keyboard, and printer
	Spare PC parts, such as printed circuit boards and disk drives
	Example software on diskettes
	Extra floppy diskettes (3 or 4)
	Blackboard or marker board

LESSON

1 - Introduce self, area of professional work, application of lesson subject in work area, other background.

2 - Survey class to determine familiarity with personal computers. Determine how many students have access to a PC and what uses they make of the computer.

3 - Outline what will be covered in the lesson:
(a) basic description of how a PC works
(b) components of a personal computer
(c) use of software

4 - Describe in simple terms how a PC works. Discuss the binary aspects of digital computers (i.e., that computers process only zeros and ones). Demonstrate addition in base 2.

5 - Identify the major components in a PC (e.g., monitor, keyboard, printer, disk drives, circuit boards). Pass sample components around the class. Explain how the components interact.

6 - Introduce the concept of software. Identify software storage devices such as hard drives and floppy disks. Take apart a floppy disk to identify the storage surface.

7 - Discuss different types of software. Distinguish between commercial products such as word processors and software produced by the PC user through programming languages. Mention the BASIC language and determine class familiarity with BASIC. Demonstrate a sample commercial software (e.g., Lotus 1-2-3, WordPerfect)

8 - Write a simple program in BASIC language and demonstrate its use, storage, and recall.

9 - Identify other uses for PCs such as terminal emulators and communications devices.

Electricity:
Static Electricity, Current Electricity, and Magnetism

OBJECTIVE
Students will understand static and current electricity at the atomic level and in terms of their applications. Students will also develop a working knowledge of the properties of magnetism.

SUPPLIES
Instructor will need:
- Power supply
- Electrolytic capacitor
- Volt/ohm meter
- Solenoid
- Neon light transformer
- Wimshurst electrostatic generator
- Magnets
- Television
- Sets of batteries for each student
- Light emitting diodes for each student

LESSON
1 - Instructor should introduce self to students and explain how electricity relates to his or her job. Discuss the importance of everyone having a basic working knowledge of electricity (safety, good consumer, etc.)

2 - Instructor will proceed through each section of the lesson giving a definition, listing examples, encouraging discussion, and utilizing equipment and materials that will provide students with a hands-on learning experience.

Static Electricity

Static electricity is a build-up of electrons on one surface (negative charge) and a build-up of atoms that are missing electrons on another surface (positive charge). It is easy to generate thousands of volts. There is little current in static electricity and, therefore, no danger.
Examples:
1. Spark after walking on carpet
2. Crackling from bed blankets
3. Hair standing up after combing
4. Clothes from dryer

Static electricity was studied through the use of the following types of generators:
- Wimshurst
- Tesla Coil
- Van De Graff

[Demonstrate Wimshurst electrostatic generator.]

Current Electricity

Current electricity is a flow of electrons in a conductor (usually metals). Examples are everywhere: lights, televisions, toasters, stoves, etc.

Conductors and Insulators

To create a current you must have a source (e.g., power lines or battery) and a conductor. Conductors are made from a material in which the atoms freely give up electrons. You must have free electrons for them to flow — creating a current. Metals are excellent conductors.

In some materials, atoms hold all of their electrons very tightly. These are called electrical insulators. Electricity will not flow in an insulator. Glass, plastic, and rubber are excellent insulators.

Materials like wood, dirt, and concrete are insulators for low voltages but will conduct when high voltages are applied. These are called poor conductors or poor insulators because they do not perform either job very well. Many materials, like wood, are better conductors when wet. [Use volt/ohm meter to demonstrate conductors and insulators.]

Energy Conservation

Some household appliances use much more electricity than others. Usually those things that produce heat use a lot of electricity.

What are the electric "hogs?"

Examples of fat hogs:	stove, electric heaters, hot water heater, clothes dryer, house full of lights turned on.
Examples of medium hogs:	microwaves, light bulb, large televisions, refrigerators.
Examples of skinny hogs:	radios, night lights, lights with dimmer turned down, clocks, VCR.

Safety

1. Watch out for electric lines that run down your street; stay away from lines that fall during a storm. During lightning storms, stay indoors or in a car.

2. There are thousands of volts inside televisions — even for awhile after they are unplugged and turned off!

3. Watch out for bad lamp cords.

4. Stay away from electrical appliances if you are in water (i.e., bath tub, shower, pool, standing on a wet basement floor).

5. Neon lights use thousands of volts. [Demonstrate voltage arc from neon light transformer.]

Sources of Electric Power:
Batteries
Power plants: coal burning, oil burning, nuclear, hydroelectric (dams)

Circuits
Circuits need the right connections to make electricity do things for you. Light Emitting Diode (LED) circuit diagrams are discussed.

Electricity at work: motors, generators, solenoids. [Demonstrate solenoid motion using solenoid and power supply.]

Activity: Have students complete construction of battery-powered LED circuit to take home.

If time permits, a power supply and large capacity electrolytic capacitor can be used to demonstrate a low-voltage, high-current arc.

Magnetism

Magnetism is an invisible force that pulls only iron or steel. Magnetism pulls some types of stainless steel, but does not pull other materials or metals such as copper, aluminum, tin, lead, silver, gold, brass, etc.

Uses and applications:
motors
generators
picking up items
holding items
finding direction (compass)

Magnets have two poles — a north pole and a south pole.
North and south poles attract each other.
North repels north and south repels south.
[Demonstrate the interaction of poles of two magnets. Explain how a magnet is used to deflect the picture on a small black and white television.]

Energy — Forms (Heat and Electricity)

OBJECTIVE

Students will review how energy affects the three states of matter (from previous presentation on atoms) and will learn how energy can be converted into forms (such as electricity) that can be used in everyday living.

SUPPLIES

Instructor will need:
- Voltmeter
- Compass (directional)
- Bell wire
- Cardboard tube (paper towel tube)
- Dry cell battery
- Bar magnet
- DC generator (bicycle type, or other)
- Light bulb (compatible with generator)
- *Switch On, Switch Off*, by Melvin Berger
- Opaque projector
- Toy steam engine
- Ice and hot water
- Resealable plastic bottle (2-L soda bottle)

LESSON

1 - Instructor will introduce self to students and explain the importance of understanding the basic forms of energy in context with everyday living.

2 - Explain what energy is and give several examples of forms of energy.

Energy is the capacity or ability to do work. Some forms of energy are solar, chemical, electrical, heat, kinetic, and potential. Give examples of each, focusing on heat and electricity. Explain that today we will learn how we use heat energy to produce electrical energy.

3 - Demonstrate that when things are heated, they expand and can be used to do work. Squeeze the coke bottle and screw the lid on tightly. Submerge the deformed, sealed bottle in an ice bath to cool the inside air. Explain (or ask) what will happen when the air inside is heated. Run hot water over the cold, sealed container or dip in a pan of hot water and demonstrate that it will want to expand, pushing on the sides of the container. Explain that we make use of the fact that things tend to expand when they are heated to convert the heat energy into other types of energy (electricity, motion).

4 - Explain what engineers do with energy. As an automotive engineer, I look for new ways to transport people from home to school, work, the grocery store, soccer practice, etc. We use the chemical energy in fuel to create heat, and we use the heat to create motion. To make electricity, engineers at local utilities use the chemical energy in coal to make heat. The heat is used to make steam, and the steam is used to turn huge turbine-generators to make electricity (recall demonstration with the tea kettle and pinwheel from presentation on atoms and the three states of matter). Explain that we do not always use coal, but sometimes we use nuclear energy or other fossil fuels to create heat to make the steam. Show the simple drawings in *Switch On, Switch Off* using the opaque projector to explain a power plant. Hydroelectric dams (like Norris Dam and Melton Hill Dam) use the energy in falling water to turn a turbine-generator and make electricity. Mention that in a few weeks another engineer is going to take them on a field trip to Bull Run Steam Plant in Oak Ridge where they will see how coal is used to make electricity. (Note: A followup field trip to any nearby power generation facility would be appropriate, making sure to tie in that facility's technology with this lesson.)

5 - Demonstrate how motion in a magnetic field produces electricity by using the procedure outlined in *Switch On, Switch Off*. Wrap some bell wire around a compass several times and make a coil (inductor) with the remainder of the wire (pp. 10-13). The inductor can be made by wrapping the wire around a cardboard tube. Instead of wrapping the wire around a compass, the ends of the wire from the inductor could be connected to a very sensitive voltmeter. Move the bar magnet back and forth inside the open coil and point out that the compass pointer moves, or the voltmeter indicates some voltage. Explain that this is because the moving magnet is making electricity, and the electricity is making a magnetic field that excites the compass pointer (which is a magnet). One can also show that a battery can make the compass pointer or voltmeter needle move.

6 - Let the students come up and give the generator a turn and observe the movement of the voltmeter and motor, and the lighting of the LED.

7 - Demonstrate how steam can be used to produce motion with small reciprocating steam engine, if available. (Plug the steam engine in at the beginning of the class so that it can be heating during other discussions/demonstrations.)

Energy — Heat Transfer

OBJECTIVE
Students will understand the different modes of heat transfer and direction of energy transfer.

SUPPLIES
Instructor will need: Small plexiglass container
Hot plate
Aluminum foil
Variac
Candy thermometer
Modified overhead projector (to change position of projected material from a horizontal to a vertical position)

LESSON

1 - Instructor should introduce self and introduce the topic of heat transfer using examples most students encounter every day.

2 - Review modes of heat transfer:
Conduction (touching a hot stove or an ice cube)
Radiation (heat from hot stove or fire)
Convection:
- forced (heating system in house or cold air blowing over you in winter)
- natural (you would still be cold in the winter even if no wind were blowing, heat from a radiator; mention the concept of buoyancy, etc.)

Boiling

3 - Boiling Heat Transfer
At what temperature does water boil? What happens when water boils? It generates vapor, which is phase change (note density difference and that bubbles go up). In which direction is the energy being transferred? The energy flows from the heater to the water to generate vapor. What is it called when heat is transferred from the vapor changing the water vapor to liquid water? Condensation! Many common things work on the boiling/condensation cycle: power plants, refrigerators, air conditioners.

4 - Experiment
Boil the water (and project this for class viewing using the modified overhead projector). Discuss the density changes in the container (due to refractive index changes in the water). Note the convective patterns in the container (this is natural convection). Mention air bubbles (all water contains some air, and, when it is heated, these coalesce). Why are the bubbles going down? (due to the optics of the overhead) Look at the bubbles at the surface of the heater and discuss why they disappear (try to convey the concept of condensation). After rapid boiling begins, what is coming off the top of the container? (steam, which is clear until it condenses and then it can be seen) Show the condensation using aluminum foil.

5 - Review the steps of the boiling/condensation cycle and their applications.

Energy Types — Field Trip to Bull Run Steam Plant

OBJECTIVE
Students will relate what they have learned in the classroom from previous presenters to applications in real life.

SUPPLIES
Instructor will need: pamphlets and souvenirs (if available) from utility on the facility being visited for each student

LESSON

1 - Instructor should introduce self and describe his/her work as an engineer and prior experience working in power plants.

2 - A previous lesson discussed what energy is and how (chemical) energy in coal is turned into electrical energy. Ask the students:
Who remembers what kind of energy is in coal?
How do we release this energy?
How does heat make steam?
How do we use steam to make electricity? (reference steam demonstration in lesson on atoms and the three states of matter)

3 - Describe what the students will see today:

(1) coal pile	(10) fan
(2) bins	(11) stack
(3) pulverizers	(12) boiler walls
(4) coal burners	(13) steam drum
(5) boiler furnace	(14) steam line
(6) ash hopper	(15) turbine
(7) precipitators	(16) generator
(8) scrubbers	(17) transformers
(9) collector	(18) condenser

Pass out pamphlets on the plant showing a schematic drawing, and briefly explain what the plant does.

5 - Load on the bus and go!

6 - At the plant, walk around the site (such as down towards the large coal pile) and describe facilities and their functions before going inside. Meet site representative for slide presentation and tour. Encourage students to ask questions, and emphasize concepts and information from previous lessons as opportunities are available.

Field Trip Notes and Checklist

A field trip is an excellent method of summarizing and reinforcing skills presented in a series of lessons. Students will see real life applications for concepts and information that might otherwise remain abstract. Hosting a field trip can be easy and fun through careful planning.

1. Select a destination that will illustrate several concepts previously presented, and discuss the available destinations with the classroom teacher and school principal.

2. Pick first, second, and third choice dates according to other events already on the school calendar (with respect to availability of chaperons and buses).

3. Contact the owner/operator of the site chosen to find out:
   Are student tours are available?
   Are certain areas of the site off limits to young children?
   Are there potential safety hazards to consider?
   What information can site personnel offer (slide shows, group tour, pamphlets)?
   Is the site available during one of the three dates selected?

4. After these preliminary questions are answered, the presenter should set up an appointment to meet with a site representative and walk the same tour route that the students will walk. Presenter should also pick up any available pamphlets.

5. When a trip date is finalized, arrange for **SCHOOL BUS** transportation of the students to the site. [No private transportation should be used.] Usually, a bus and driver will be available at a time following the final morning bus schedule. The cost for the transportation in most school systems is small (includes cost of gasoline and labor for hours worked by the driver) and should be paid for by organization hosting the tour.

6. It is advised that the presenter keep in close contact with both the classroom teacher and the site representative to be sure that no scheduling conflicts arise.

7. Plan a followup activity for use by the classroom teacher, perhaps an art or writing activity that will reinforce the concepts covered during the field trip. For example, students might write a letter of thanks to the site representative describing what they learned. Following a trip to an electrical generation site, students could draw a large mural showing the site, switchyard, transmission towers, nearby industries, and homes and show "electrical wires" by gluing or taping colored yarn onto the mural.

Engineering as a Career

OBJECTIVE
Students will develop a better understanding of engineering as a career, especially ceramic engineering.

SUPPLIES

Instructor will need:	Viewgraph presentation "Engineering As A Career" Videotape "Ceramics: Into the Future" (15 min.) Photochromic lens, lamp with strong light bulb Space shuttle tile, 2 hot plates, beaker of water Miscellaneous samples: ceramic armor, dental brackets, flexible magnet, molten metal filter National Engineering Week bookmarks for students
School will supply:	VHS VCR and television 2 Hot plates Beaker of water

LESSON

1 - Instructor will introduce self to students and explain what type of engineer she/he is.

2 - Give viewgraph presentation "Engineering As A Career."

3 - Show videotape "Ceramics: Into the Future" (15 minutes).

4 - Space Shuttle Tile Demonstration. Put space shuttle tile on one hot plate and beaker of water on the other hot plate. When the water is boiling, have students come and touch the top of the space shuttle title to demonstrate that heat is not transferred through the tile.

5 - Photocromic Lens Demonstration. Mask part of the lens. Place lens under lamp (or in window sill if sun is shining in). Show students how the lens darkens with exposure to light.

6 - Miscellaneous ceramic samples. Explain each item and pass around to students.

7 - At the end of class, pass out bookmarks to each student.

Environment

OBJECTIVE

Students will understand more about:

ECOSYSTEMS - All living things depend on each other for survival.
POLLUTION - Natural resources may either be used or misused.
WHAT EACH PERSON CAN DO TO HELP - We are the caretakers of the earth.
CAREERS - Science and technology play a major role in understanding and protecting our environment.

SUPPLIES

The instructor will need:
- color slides of nature and pollution
- homemade ecosystem (see attached instructions)
- optional: instructor may come dressed as Mother Nature

LESSON

1 - Mother Nature's grand entrance. Tennessee is a wonderful place to live and we are so lucky to have trees, mountains, lakes, and abundant wildlife. Compare Tennessee to other parts of the world. What kinds of wildlife do you see in Tennessee? Foxes, turkeys, squirrels, bears, bob-cats, turtles, frogs, fish, birds, eagles, hawks, deer, mice, possums, raccoons, skunks, rabbits, etc.

What kinds of plants do you see in Tennessee? We have discovered a plant right here in Tennessee that might be a cure for cancer: the paw paw tree. And of course we have ginseng in Tennessee. Ginseng is used all over the world to make teas, medicines, and tonics to make you feel better. Ginseng gives you a kind of natural energy and is useful in healing. We are also famous for beautiful dogwood trees and spring flowers.

2 - Start slide show. There are many beautiful places in the world. Our world population is growing so fast that we must take special measures to protect the natural wildlife. We are the caretakers of the earth. Sometimes we protect the environment by setting aside a special place, such as the Smokey Mountains National Park. The Smokey Mountains National Park has more visitors than any other park in the United States. The plants in the park are suffering from ozone damage. Ozone comes from the emissions of automobiles. So many people visit the mountains every year in cars that we are hurting the environment of this special place. How do you think we could fix this problem?

Some types of wildlife, like elephants, need a whole lot of space to live in, more than a zoo or a park. We are running out of space for elephants in our world. Man needs this space to build cities to live in, farms for growing food, and dams for electric power. We are competing with nature for space. What other things might the elephants need to live happy, healthy lives? Don't all living things need the those same types of things?

3 - Introduce the concept of ecosystems/biosystems. Show homemade ecosystem/terrarium (made from plastic soda bottle, prototype and instructions to be left with the teacher). We are all dependent on many things to live healthy, happy lives: food, air, water, warmth (energy), love and nurturing. Briefly discuss the food chain, the water cycle, and the carbon dioxide cycle, and relate these cycles to the plant in the terrarium, and then to man. What will happen to the plant if you take away its food, or water, or carbon dioxide? What will happen to the elephants if they do not have enough space to live? What will happen to us if we pollute our air, water, and food?

4 - What does the word "endangered" mean? What is "extinction?" Elephants are very special because they have many human traits. They show love and affection and they mourn their dead. They are very big and strong, yet capable of amazing control. Elephants are being killed for their ivory tusks. People make jewelry, piano keys, and furniture out of ivory. Elephants are an endangered species. Many of the animals in Tennessee are endangered species too. Elephants and other endangered animals are important to us because we all depend on each other for survival.

5 - Try to convey the concept that some processes take a long time to happen, and nothing terrible will happen tomorrow or the next day. Mother Nature has confidence that today's children will make the world a better place to live in. What can children do to make the world a better place to live in? A lot!

Give a hoot, don't pollute
Only <u>you</u> can prevent forest fires
Recycle
Plant a tree
Learn about wildlife - scouting, nature hikes, camps
Turn off the lights when they are not being used
Close the refrigerator door

6 - Many people all over the world are working to make our world a better place to live in. You have probably seen a lot of television shows about the environment. Have you heard about the rainforests? Why are we cutting down the rainforests in South America? (This provides grassland for cattle for hamburgers for people.) Why is this such a bad thing? The rainforests provide some of the most special plants and animals that cannot be found anywhere else in the world. Some of the plants in the rainforests are used to make prescription drugs for sick people. If we cut down all the rain forests, we will not have those plants to help us anymore. And what about all the animals that live in the rain forests? They won't have a home anymore. We need to plan ahead for our future and protect these important natural resources!

7 - There are many different jobs you can do when you grow up to help make the world a better place to live in. Just like detectives, scientists study clues to learn more about the environment. Some scientists study how plants and animals grow or how pollution hurts them. Some scientists look for dinosaur bones or ancient cities buried deep under the sand. Some scientists study the sky, the weather, the stars, and outer space — looking for the secrets of the universe! Some scientists study the oceans, like Jacque Cousteau. All these different types of scientific disciplines contribute something to our earth — knowledge that will help us to understand how the earth works.

In what other types of jobs might someone help the earth? (park ranger, teacher, hunting guide, zookeeper, veterinarian, politician)

8 - Nature is both wonderful and harsh. We build houses and cities to protect ourselves from the cold and the rain. It would be very difficult to live as our great-grandparents did without electricity or modern conveniences. If we are not careful, we will use up a lot of our natural resources to live such an easy, convenient life. We must all plan ahead for our children, and all the generations to come. We must leave something for the future. Children in Tennessee are lucky because their families still live very close to nature. Tennessee still has many farms, and, as a result, many people know a great deal about plants and animals. This knowledge is very special,

Many places in the world are full of concrete and smog. Protect Tennessee for the generations to come. You are a child of the universe, kin to the trees and the stars. You have a right to be here, and you have a responsibility to protect and preserve your homeland.

How to Make Your Own Ecosystem

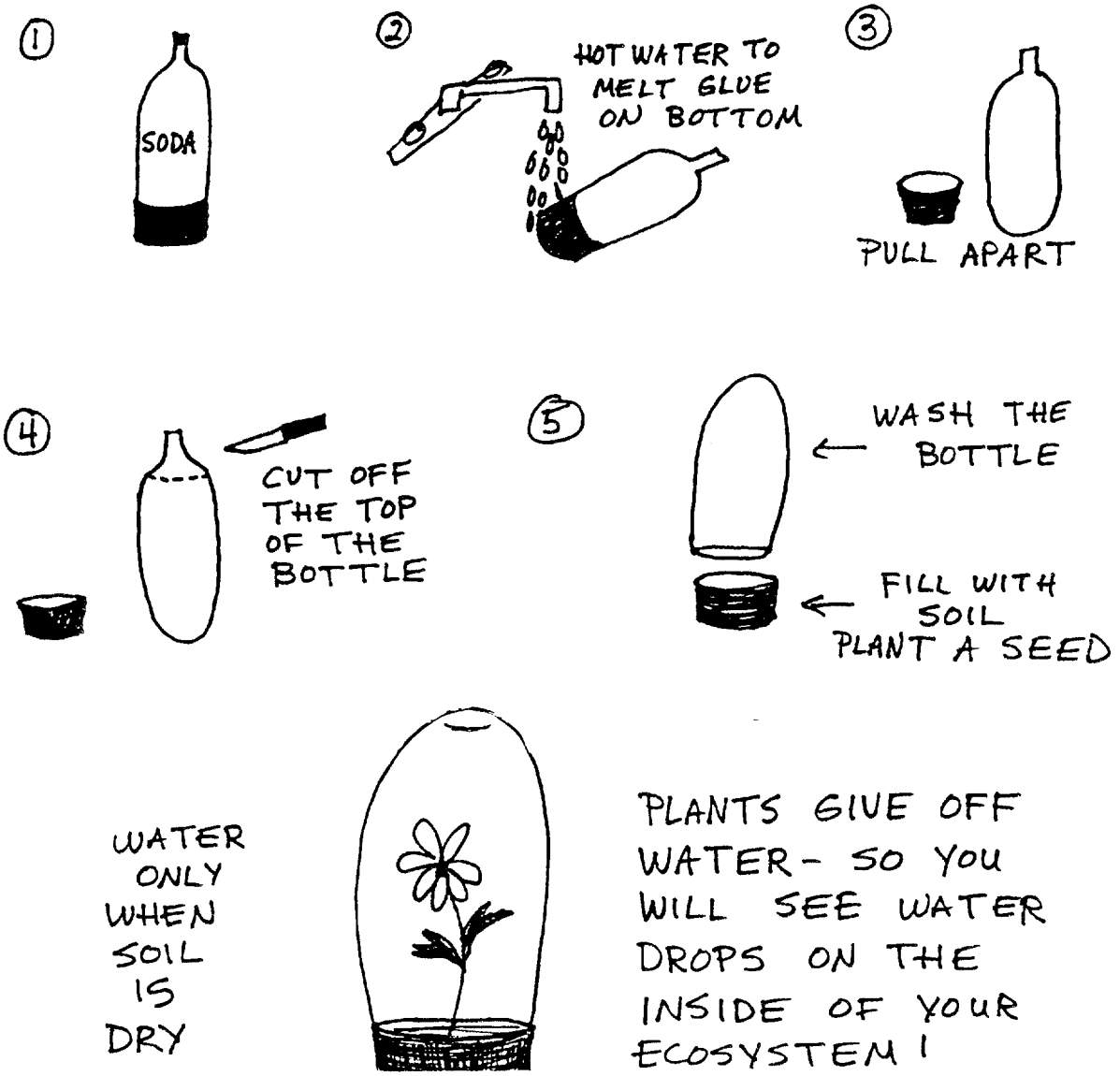

Geology — Minerals

OBJECTIVE
To define the various properties of minerals and show how they are used to identify minerals.

SUPPLIES
Instructor will need:

Minerals that exhibit the properties that will be discussed. Examples will be provided below.

Books, charts, photographs, and/or slides showing other information that may not be available in mineral form.

If desired, and time allows, some experimental equipment to show how some properties are determined. Examples will be provided below.

LESSON

1 - Introduce self and ask the students what they know about geology. Ask the students what are the layers of the earth, and what are the three different kinds of rocks. Ask students what kinds of things come from the earth. Ask them what does not come from the earth (nothing). Encourage participation.

2 - Explain the difference between a rock and a mineral. Have a rock that clearly shows several kinds of minerals (due to color or crystal variations) and a relatively large specimen that is one mineral (quartz, hematite, or some other).

3 - Discuss the three different kinds of rocks, and talk a little bit about each. For example, sedimentary rock can contain fossils and the layers can be useful in determining the age of the fossils. Igneous rock samples include granite and quartz. Metamorphic rock include quartzite that comes from quartz and slate that comes from shale. Specimens of each would be good. Also pictures from books or slides and photographs could be used as a resource.

4 - Start discussing and showing the mineral samples supplemented by slides and pictures. Work through the minerals in such a way that the various properties (define what a property is) can be explained. Properties that can be easily shown are the following:

<u>Structure</u>: amorphous (such as coal and turquoise) or crystalline (such as quartz, galena, gypsum, and tourmaline)

<u>Color</u>: red (cinnabar - mercury ore), green or blue green (copper mineral - turquoise), blue (aquamarine - beryl mineral as is emerald), yellow or gold (pyrite), etc.

Density: galena (lead ore) and almost any other specimen

Magnetic: hematite (iron ore) will support a magnet while other minerals will not

Optical: calcite which is birefringent (breaks light up into two rays, so you see double) as compared to something like quartz

Hardness: talc (hardness of 1) or gypsum (hardness of 2) can be scratched by a fingernail (hardness of 2.5), calcite has a hardness of 3 and diamond has a hardness of 10. Charts or tables could supplement this.

Others: properties such as thermal conductivity and electrical conductivity can also be shown with minerals such as mica. Mica will exhibit different properties in the "sheet" direction as opposed to the perpendicular direction.

All of these properties can be easily shown. Additional properties may also be shown. As the minerals are being shown references should be made to other branches of science that are related. For example, when discussing the optical properties, references can be made to light. For density references can be made to weighing and measurement. For color variations in minerals references can be made to atoms and chemistry to explain how slight variations in composition can lead to pronounced color variations.

5 - Finish the lesson by summarizing the properties that were discussed and letting the students provide examples of each. Let the students handle the samples as appropriate. If possible, allow the students to have a small sample, such as mica (they can split this into many layers).

Additional Activities

Other activities include going on a field trip. A local geologist could arrange for the students to go into the field and see some of the local examples of minerals, rocks, and rock formations (faults, rock layers, etc.). Also, some simple experiments could be conducted like showing how limestone is reacted with a mild acid like vinegar. This activity could also be referenced to chemistry.

Geometry

OBJECTIVE
Students will be able to view traditional theoretical mathematics in light of practical, day-to-day examples.

SUPPLIES
All supplies needed are typically available in the classroom (pointers, yard sticks, globes, floor tile, blocks, etc.)

LESSON

1 - Introduction - Introduce self to students and explain how geometry is a part of everyday life.

2 - Review basic shapes:
  Square - 4 equal sides
  Rectangle - 2 long sides, 2 short sides
  Triangle - 3 sides; rotated triangles are cones
  Circle - no endpoint; rotated circles are spheres (spin a quarter to show that what is in essence a two-dimensional circle becomes a sphere when it is rotated

3 - Common uses of geometric shapes:
  Squares - building blocks
  Spheres - balls
  Cones - used to divide flow of some sort:
    a roof divides rain
    wedge-shaped cars divide air flow
  Circles - continuous motion: Anytime you have continuous motion or have a need to return to the point of beginning, a circle is involved.
    Examples: wheels, bearings, gears, clocks, solar system (use the globe to demonstrate rotation)

4 - Measurement - all ties to multiplication
  Perimeter - sum of the length of all sides
  Area - length times width
    Examples: carpet, tile, paint (coverage), yard goods, volume

5 - Angles: Rays - map reading
    Segments
    Measurement

6 - Gather the students and let them know that there is a practical side to the things that they study. Tell them that each of them has the capacity to excel, and that they should never stop reaching for higher goals.

Graphs

OBJECTIVE
Students will be able to represent numeric data in bar graph format.

SUPPLIES

Each student will need:	1 M&Ms graph handout 1 "Fun-Size" bag of M&Ms (contain about 20 M&Ms each) 5 Crayons: colors red, yellow, orange, green, and brown
Instructor will need:	1 Current local newspaper (including "Funnies" section) Sample of plain text report Samples of color graphs, M&Ms pictograph, M&Ms bar graph 12 Nonedible treats for students with possible food allergies Award stickers for each student who completes graph

LESSON

1 - Instructor should introduce self to students and explain how this math skill is used in his or her job (or related task).

2 - Using local newspaper, explain the importance of visualizing information. Illustrate the compelling nature of pictures through questions to class: Who reads the newspaper? What is your favorite section? Do you ever notice that some cartoons have no text/words — pictures tell the story.

3 - Using plain text report and samples of color graphs ask, "Which is most interesting?" "Which is easiest to understand?" Explain how graphs can often present numeric data better than using a table of numbers.

4 - Show different types of graphs: line graph, bar graph, and pictograph. Explain how pictograph is compiled using small "Fun-Size" bag of colored M&Ms as example; then show how that same data looks as a standard bar graph.

5 - Activity: Hand out M&Ms graph worksheet. Ask students to get out their 5 crayons and use one to write their name on back of paper. BEFORE distributing bags of M&Ms, tell students they are to CAREFULLY open their bags, sort M&Ms by color, color in appropriate bars on graph with "like color" crayon, double-check color quantities of M&Ms with colored bars, then raise their hand to indicate when they are finished. Instructor and teacher will then go to each student, check graphs, award a sticker to indicate completion of task, and THEN students may eat M&Ms (NOTE: Instructor should ask if any students are allergic to chocolate, nuts, or milk. If so, swap M&Ms for a nonedible treat.) Repeat these instructions to the students as you distribute M&Ms, and encourage students to raise their hands if they need help.

6 - Upon completion of activity, ask, "Who had more red M&Ms than any other color?" (repeat this question through all 5 colors) "What other kinds of things could we count and put into graph format?" "Are there any questions about making graphs?"

M & M's

Red										
Yellow										
Orange										
Green										
Light Brown										
Dark Brown										
	1	2	3	4	5	6	7	8	9	10

Morning Temperatures

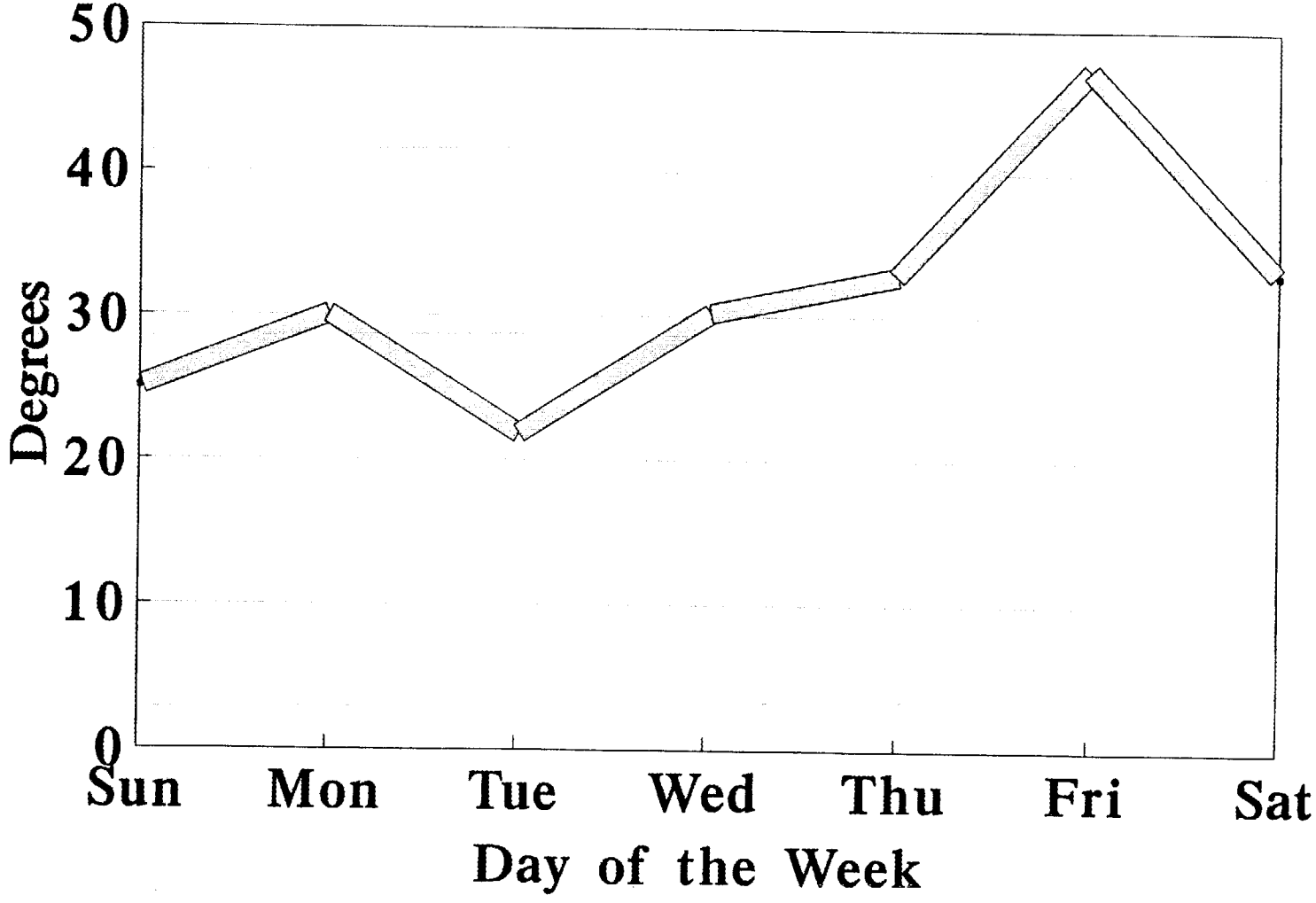

The noise levels in my work area are acceptably low.

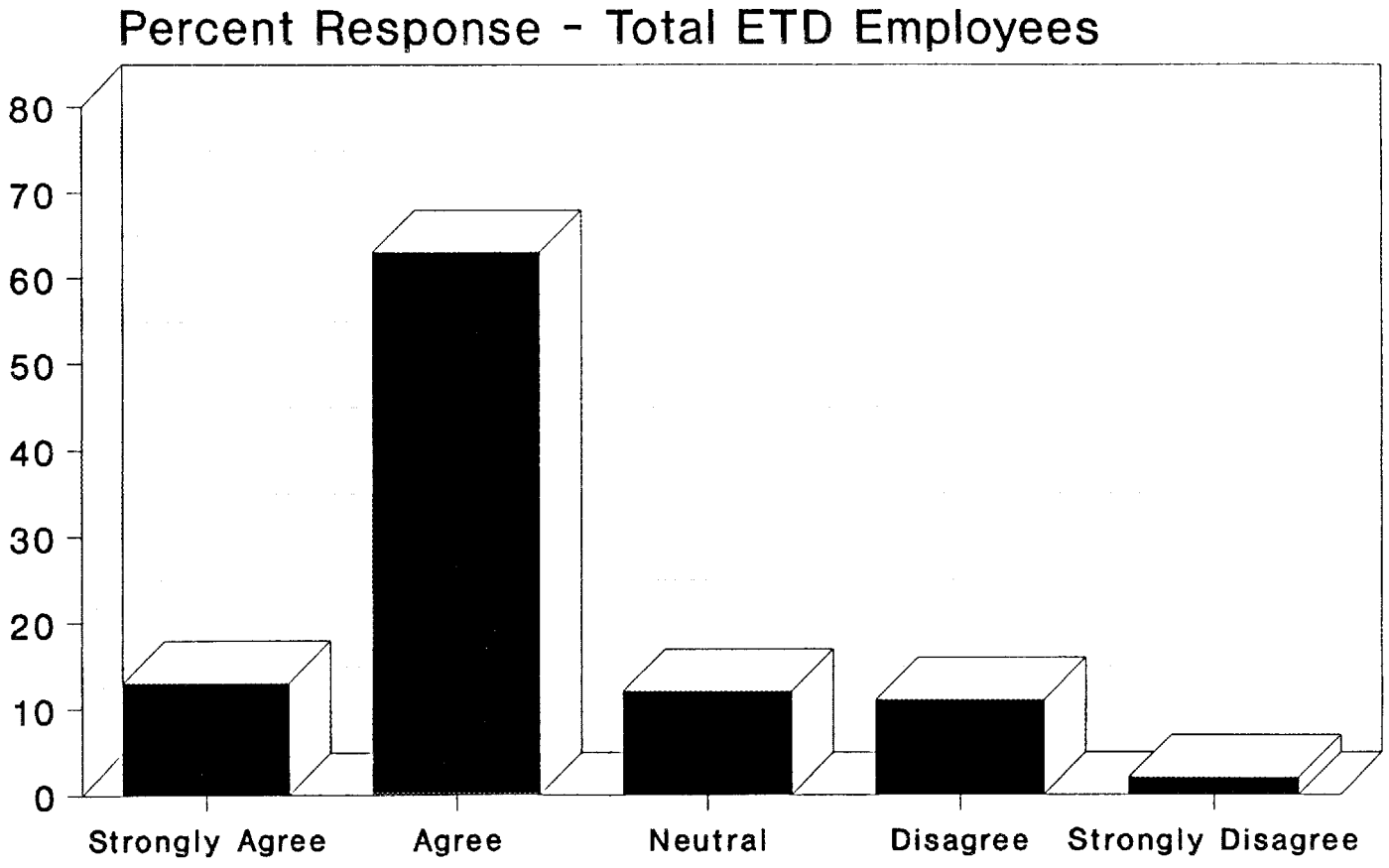

M & M's

Red	3
Yellow	4
Orange	1
Green	4
Light Brown	3
Dark Brown	6
TOTAL	21

M & M's

Red	3
Yellow	4
Orange	1
Green	4
Light Brown	3
Dark Brown	6
TOTAL	21

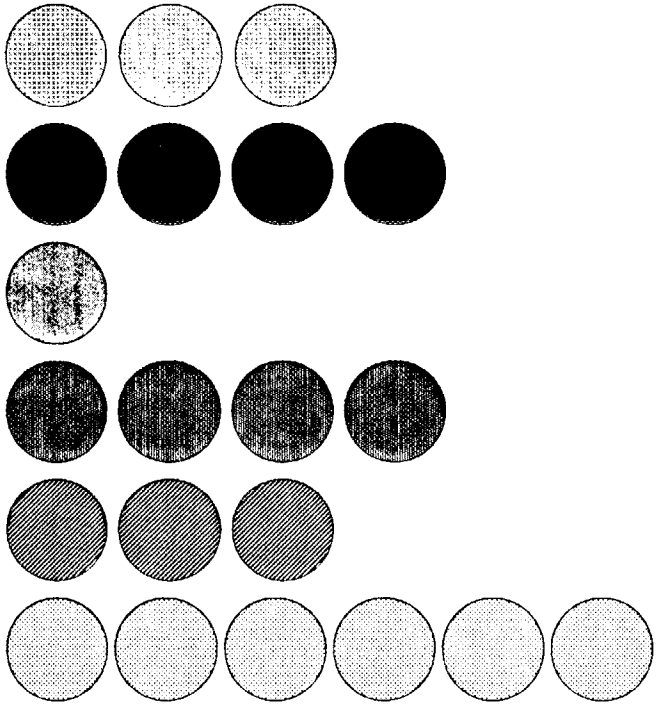

M & M's

Red

Yellow

Orange

Green

Light Brown

Dark Brown

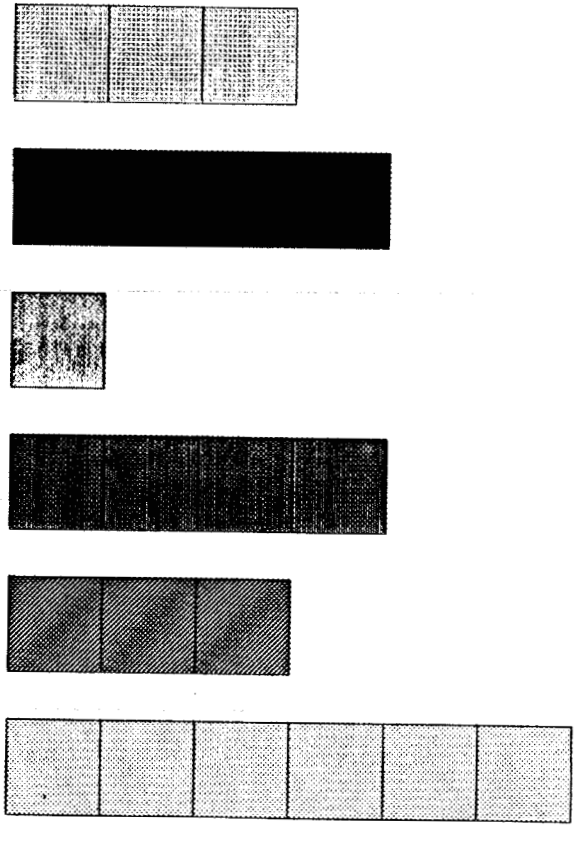

1 2 3 4 5 6

My Classmates

My name: _____

Count the boys and girls who are in the classroom now.

There are ____ boys,

and

there are ____ girls.

Color in the correct number of squares below to make a bar graph that will <u>show</u> how many boys and girls are in the classroom now.

Boys														
Girls														
	1	2	3	4	5	6	7	8	9	10	11	12	13	

Kinetic and Potential Energy

OBJECTIVE
Students will be able to recognize examples of potential and kinetic and gain a general understanding of energy conversion and applications.

SUPPLIES

Each student will need:	An object which each student can drop (i.e., book)
Instructor will need:	Ruler and support (simple lever) Light weight Heavier weight Videotape of large-scale plate test conducted at the National Institute of Standards and Technology

LESSON

1 - Energy (review)
  What is energy? (The ability to do work.)
  What contains energy? (Everything contains energy.)
  Where does energy come from? (Don't create energy, just change its form.)

2 - Forms of Energy
  Electrical
  Heat (from sun or heater)
  Fuel (coal, gas, etc.)
  Food (for our energy)
  Mechanical (kinetic and potential)

3 - Mechanical Energy (one form of energy which deals with things in motion)
  Kinetic - energy of motion
  Potential - energy because of height

4 - Kinetic and Potential Energy
  a. Example of kinetic/potential energy and energy conversion by dropping book and allowing students to do the same.
  b. Explain the relationships of kinetic/potential energy (greater height, weight or speed means greater energy.
  c. Practical example of kinetic/potential energy in dam (water at top of dam has greatest potential energy and that water when allowed to spill possesses kinetic energy which is used to make electricity).
  d. Demonstration of potential and kinetic energy by moving greater weight with smaller weight by increasing its height above lever.

5 - Show and discuss videotape of large-scale tests (tape showing large cracked plates being failed to assess the structural integrity of reactor material).
  Explain that engineers use science to "predict" the amount of energy that structures such as bridges can safely carry.

Light

OBJECTIVES

Students will understand these basic properties of light:

1. light travels in straight lines
2. how fast light travels
3. how light can be reflected
4. light is a wave
5. how light can be bent or refracted
6. visible light is a part of the electromagnetic spectrum
7. how light can be polarized

SUPPLIES

Instructor will need:
- Strong light source or flashlight
- Tennis ball
- 2 pairs of sunglasses
- Acrylic plastic panel
- Candle, holder, and matches
- Glass jar or 200-mL beaker
- Polarizing filters and plastic sample drawer
- Class 11 He-Ne laser
- 4 wood blocks and 2 clamps
- Screen for candle
- Equilateral prism and holder
- Electromagnetic spectrum

LESSON

1 - Instructor should introduce self and begin a general discussion on light: how it is used every day, sources, and interesting properties.

2 - Point to an object in the classroom and ask students: Can everyone see it? Why? Could you see it if the light were off? Where do you reach when you see something and want to touch it? Through these actions, you have observed that <u>light travels in straight lines</u>. You noticed this because, to touch something, you reach "straight ahead" for it. Secondly, <u>light emanates from all objects and in all directions</u>. Each person in the room can see an object on the table, and we see these objects either by reflected light, or by light that comes from the object itself. [Show this with a flashlight as a direct source; then shine the light on an object to show that we see the object by light bouncing off the object and into our eyes.] Point out that <u>light can be thought of as a stream of particles</u>.

3 - How fast do these particles travel? At a speed (in the vacuum of space) of 186,000 miles/second, light holds the speed record in the universe (apologies to Captains Kirk and Solo of *Star Trek* and *Star Wars*, respectively). At this speed, light can travel 7½ times around the earth in 1 second. It takes light about 7 minutes to travel from the sun to the earth, about 4 years to travel from the nearest star (neglecting the sun for the moment), and about 100,000 years to travel across our galaxy, the Milky Way. Light travels slower in things such as glass, water, and other transparent materials. We will take

advantage of this fact later in this discussion. Thus, light travels 186,000 miles/second through space and is slower as it travels in other materials

4 - Illustrate that light, as particles, travels in straight lines and can be reflected ("bounced off of things") by using a tennis ball and bouncing it off the floor or wall. Light can be reflected.

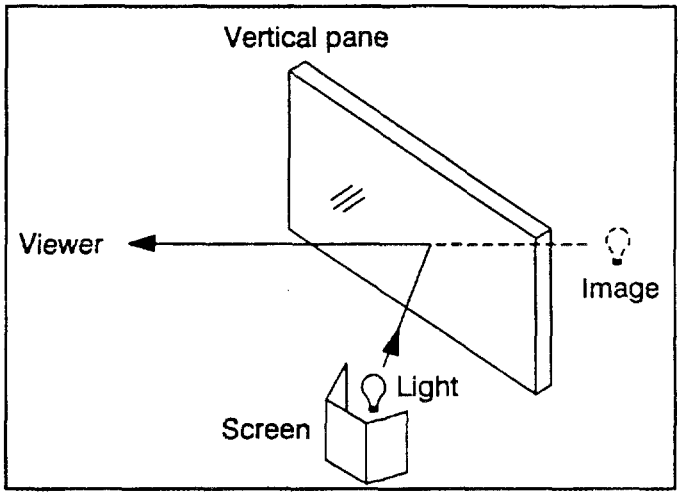

When we look at ourselves in a mirror, we see reflected light that "appears" to come from behind the mirror. What we see is an image — it is not real because we cannot touch and feel it; nevertheless, we can see it. Illustrate an image by setting up a light source (for example, a candle) to create an image as shown at the right. Angle the vertical pane so that the class can see the image, and use the screen to hide the light source. With the room darkened, the class will see the image. Make a light mark on the table at the location of the image so you will know where it is. Show that the image is not real by holding your hand in the image, or by showing that the image can "burn" inside a glass of water. To do this, place a glass of water at the location of the image, and it will look like the candle is burning in the water. This is an old method for creating images on the stage (e.g., Shakespeare's ghost of Banquo) where the audience sees only a reflection of the real actor. If time permits, draw a plan view of the set-up and sketch some rays of light from the candle to the audience showing how the reflected rays seem to come from the image behind the pane.

5 - Use the laser to demonstrate the straight line behavior and reflection of light. To do this, shine the laser light along the lecture desk and let it reflect from a plane mirror lying on the desk. The beams can be made visible with chalk dust from an eraser dusted in the air.

6 - Fill an aquarium with water and add a little milk to make the water cloudy. Shine the laser light at an angle onto the surface of water and notice that the light travelling into the water is bent. The bending of light as it travels from one material into another is refraction. Refraction can only be explained by considering light to be a series of waves, not particles. Illustrate this by sketching on the chalkboard columns and rows of a band marching along a paved road to simulate light waves (the rows) moving in air. The band continues to march into mud (or green slime) at an oblique angle; as the marchers enter it, they are slowed (just like the light entering the water is slowed) so that the marchers who have not yet entered the mud tend to catch up and the overall direction of the march inexorably changes (just as the light is refracted as it enters the water). Shine the laser light into a small equilateral prism to show that the light can be refracted by glass. If the vertex of the prism is pointing down, the light will be bent up; this bending can be made visible using the chalk dust technique as before. Discuss the fact that telescopes,

magnifiers, eyeglasses, microscopes all depend on the bending of light by pieces of glass called lenses.

7 - Now, what happens if we shine white light into the prism? Let's do it. We observe that in addition to refraction, the light is split into colors. The separation of white light into colors is called dispersion. We did not see dispersion of laser light because it starts out as one color. However, by observation of the dispersion process, white light is composed of all of the colors of the rainbow: Red, Orange, Yellow, Green, Blue, Indigo, Violet (Roy G. Biv). Discuss the fact that the only difference between each color is the wavelength of the light. When we see a red shirt using white light, all of the colors except for red are absorbed by the shirt, and red light alone is reflected into our eyes. Thus, the color of an object is due to the absorption of all other colors by the object and the reflection of one color. Draw a wave on the chalkboard, and mention that the wavelength is the distance from crest to crest. If this wave represented red light, the wavelength is about 30 millionths of an inch; the wavelength of violet light is 15 millionths of an inch. Is there light with longer and shorter wavelengths? Yes. When we go to longer wavelengths, we find infrared, microwaves (yes, the same used in a microwave oven), radio, and TV. When we go to shorter wavelengths, we find ultraviolet, x-rays, and gamma rays. As humans, we can only see the visible portion of this entire range called the electromagnetic spectrum.

8 - If time permits, use two pairs of sunglasses to illustrate the polarization of light. Look through two lenses, and rotate one to show the extinction of light. Flex a piece of clear, hard plastic between the lenses to show stress patterns in the plastic. Using this technique with clear plastic models of mechanical objects helps designers know where those mechanical objects are most likely to fail.

9 - We have learned that
(a) Light travels in straight lines.
(b) We see things by reflected light.
(c) Light is often thought of as a stream of particles.
(d) Light is also a wave and is only a small part of the electromagnetic spectrum.
(e) Color is dependent only on the wavelength of light.

Therefore, what is light? Light is what we see.

Machines — Simple Machines

OBJECTIVE

Students will understand the concept of work as force multiplied by distance and will learn that simple machines are devices that can be designed and used to make work easier.

SUPPLIES

Instructor will need: working models of all simple and compound machines discussed (these can easily be handmade from wood scraps, small pulleys, etc.)
weight
set of worksheets for each student

LESSON

1 - Instructor should introduce self and explain how understanding work and using simple machines makes his or her job easier.

2 - Introduce the concept of "work" with examples:
- mowing the yard
- riding a bicycle up a hill
- lifting weights

Using weight as an example, explain that work = distance x force.
Examples:
- stepping up on a 1-foot high box
- lifting 12-pound concrete block 1 foot (let class members lift block)

A simple machine makes doing work easier. Go over the four types of simple and compound machines to be demonstrated. Distribute handout and relate each machine to examples in the handout.

As each experiment is performed, have students write the measured force by the hand in the handout figures.

3 - Use of **Pulleys** to Lift Block

a.

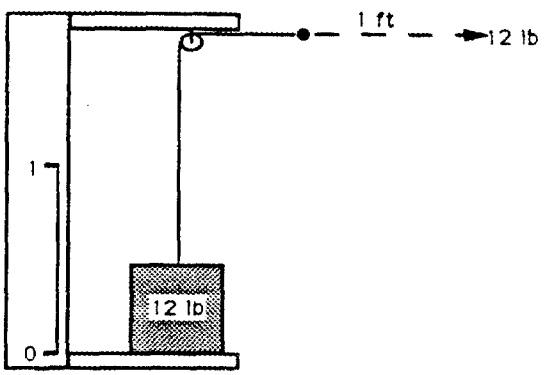

This simple machine just changes direction of force. We still have to pull with 12 lb over a distance of 1 ft to lift the wight 1 ft.

Work = 1 ft x 12 lb = 12 ft-lb

b.

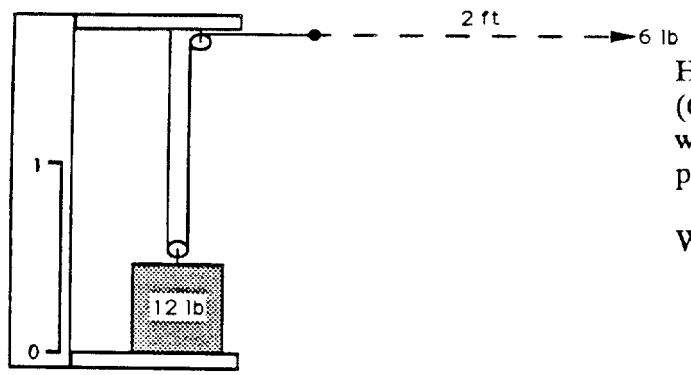

Here each cord pulls up on block (6 lb each), so we have to pull with only 6 lb. But, we have to pull over a distance of 2 ft.

Work = 2 ft x 6 lb = 12 ft-lb

c.

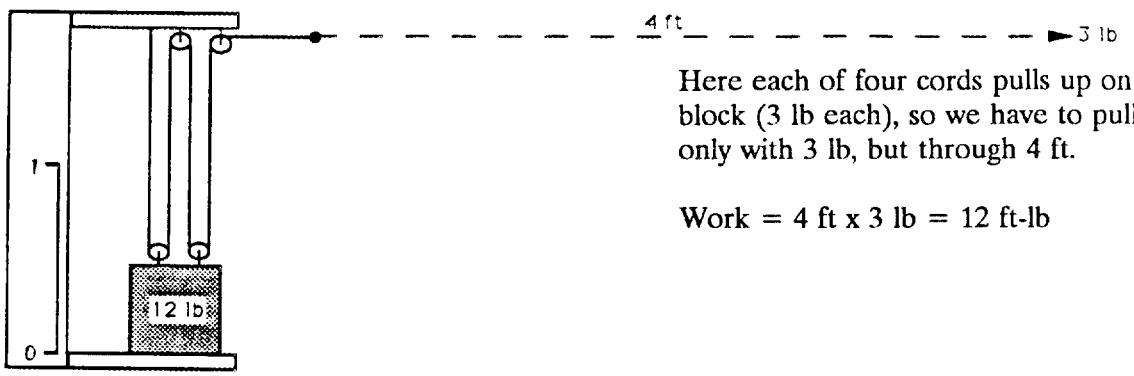

Here each of four cords pulls up on block (3 lb each), so we have to pull only with 3 lb, but through 4 ft.

Work = 4 ft x 3 lb = 12 ft-lb

No matter how we do it, it takes 12 ft-lb of work. But simple machines with pulleys make it easier because less force is required. Let students pull on cord to see that 3-lb force is a lot easier than 12-lb.

4 - Use of **Lever** to Lift Block

a.

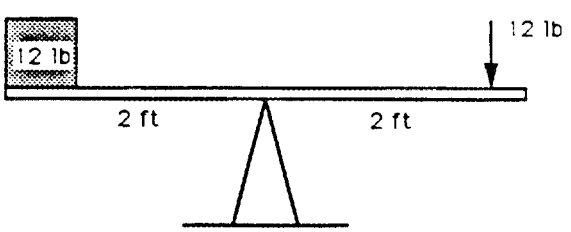

Like a see-saw. If supported in the middle, it takes 12 lb down to raise this weight. We would have to move the force through 1 ft to raise the weight 1 ft.

Work = 1 ft x 12 lb = 12 ft-lb

How could we make it easier?

b.

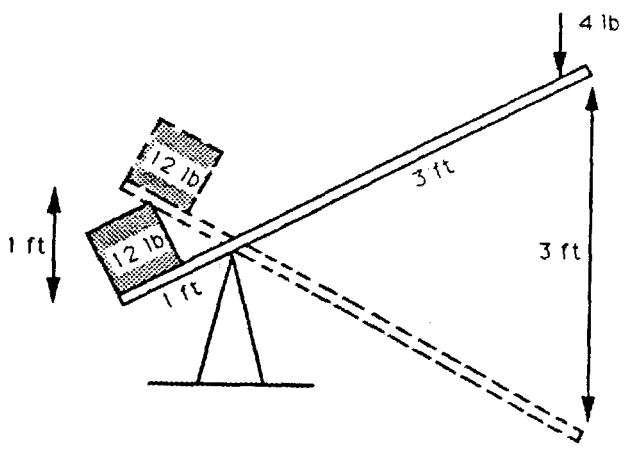

Here, using the principle of a lever, we can lift the 12-lb weight with just 4 lb of force.

Work = 3 ft x 4 lb = 12 ft-lb

Relate to lifting a large person on a see-saw or prying the lid from a can.

5 - Use of a **Ramp**

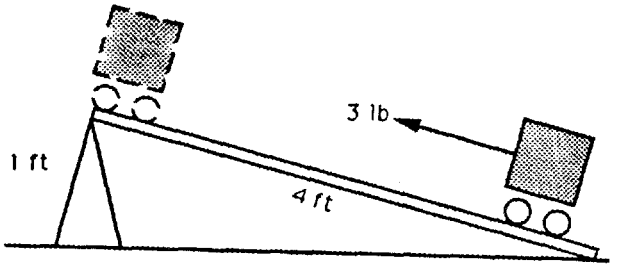

Here just 3 lb is required, but to do the required work, we have to pull through 4 ft.

Work = 4 ft x 3 lb = 12 ft=lb

Relate to riding a bicycle up a hill.

6 - Use of a **Screw Jack**

a. Explain how our screw jack is a compound machine because it has both a ramp (wrapped round and round the shaft) and a lever.

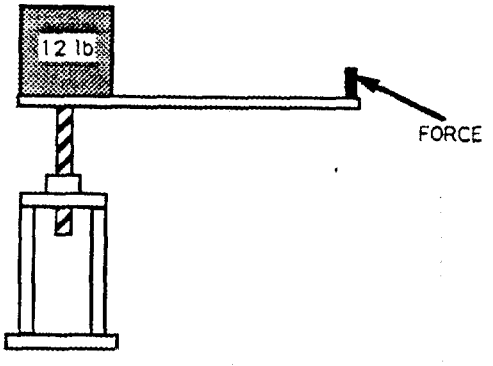

Here very little force is required; but we have to turn the screw many times to get 12 ft-lb.

7 - We have seen three kinds of simple machines for lifting a weight: pulleys, levers, and ramps. Also, we saw a compound machine, the screw jack, which combines a lever and a ramp. Engineers use these simple concepts to design all kinds of machines for making our lives much easier.

SIMPLE MACHINES MAKE WORK EASIER

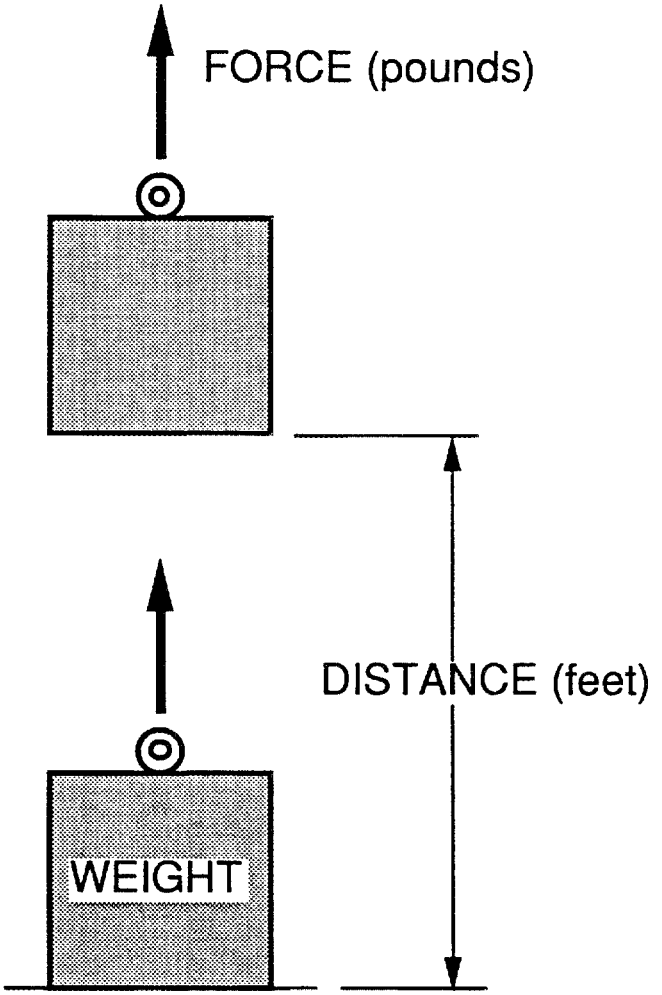

LIFTING A WEIGHT REQUIRES WORK

WORK=DISTANCE x FORCE

TYPES OF SIMPLE MACHINES

1. PULLEYS

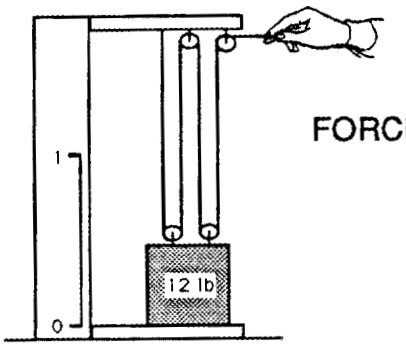

FORCE: _____ lb

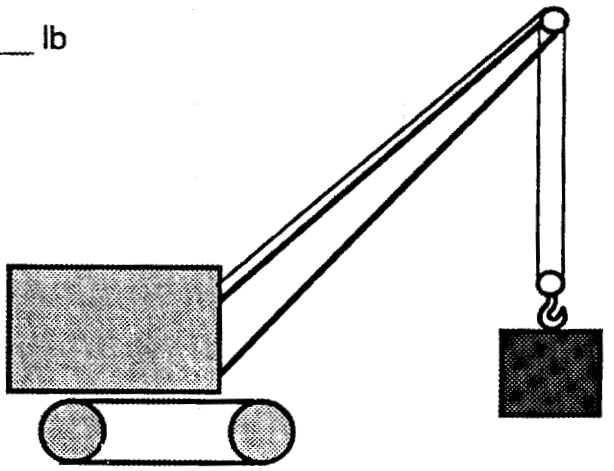

WORK:

_____ ft x _____ lb

= _____ ft-lb

2. LEVERS

FORCE: _____ lb

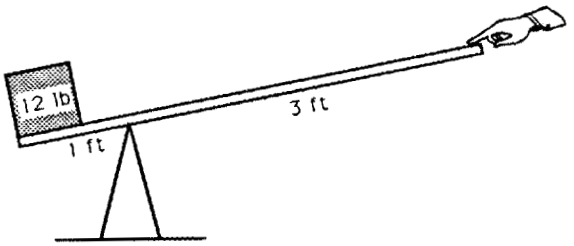

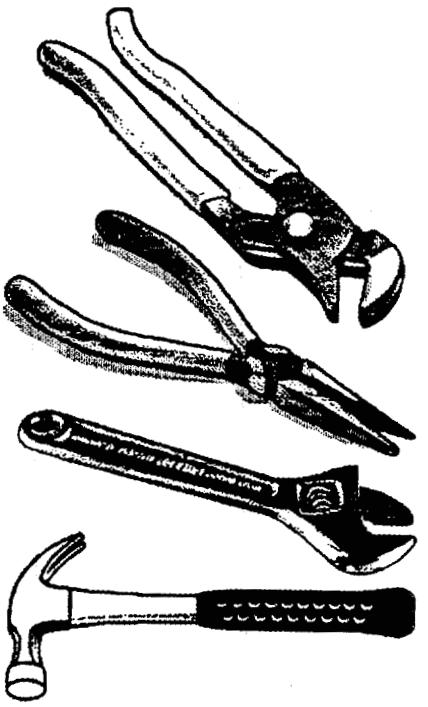

WORK:

_____ ft x _____ lb

= _____ ft-lb

3. RAMPS

FORCE: _____ lb

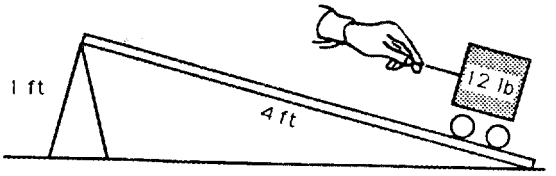

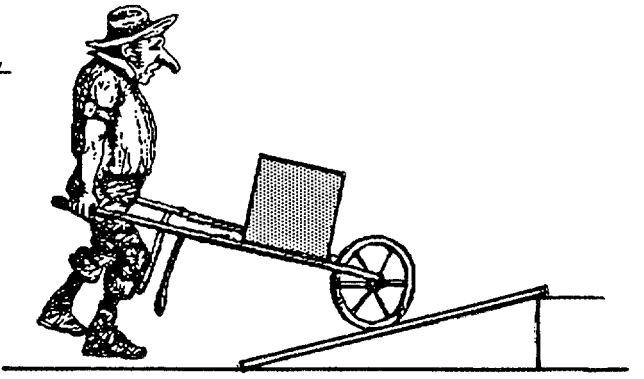

WORK:

_____ ft x _____ lb

= _____ ft-lb

4. SCREW JACKS

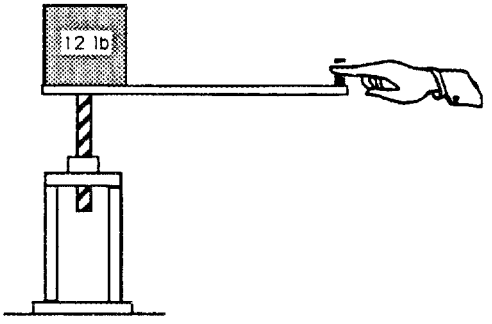

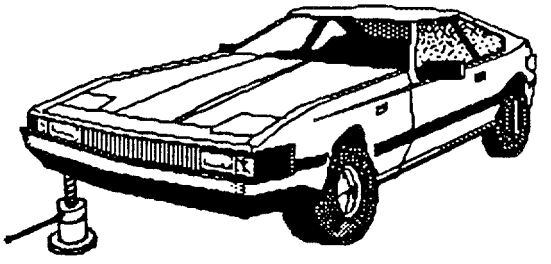

Metrics - SI

OBJECTIVE

Students will better understand the concepts of length and volume as measured in metric or SI units.

SUPPLIES

Instructor will need: 3 to 8 meter sticks
Flexible meters with centimeter and millimeter markings
Several clear plastic containers (1 L, 2 L, and 3 L) such as soda bottles
Carton container that holds 1 L

Students will need: Several lengths of string or yarn
Scissors

LESSON

1 - Instructor should introduce self and explain how metric and SI units of measure are used in his or her job.

2 - Explain the meaning of SI, The International System of Units, and its relation to "metric." The term "SI" is derived from the French Le System International d'Unite (International System of Units). In the United States, this system of measurement is often referred to as the metric system, but it is not the same.

3 - Discuss sports events that involve length (races, swimming, etc.). Ask students to name sports that specifically use SI or metric lengths, such as 5-k and 100-m dash.

4 - Discuss the meaning of meter: a standardized unit of length that is the only unit known all over the world. Show meter sticks and pass them around the class. Ask students to gage a meter with their hands. Explain that the symbol for meter is "m." (Also, explain that a symbol is **not** an abbreviation, it does not vary with language of type, and, therefore, is not capitalized nor has a period following.)

5 - Ask why a cent ($0.01) is called a cent -- it is one hundredth of a dollar (century/hundred). Explain the representation "0.01" not as a common fraction (1/100), but as a decimal fraction. Discuss the following prefixes and write their symbols on the chalk board: centi- (c), milli- (m), and kilo- (k).

6 - Show the length of a centimeter and a millimeter, and give examples that will let students get a feel for those measurements (the thickness of a paper clip is about 1 mm).

7 - Help students understand the length of a kilometer. Discuss how much time it would take to walk a kilometer (about 10 to 15 minutes, depending on pace).

8 - Explain the concept of measurement/comparison with the meter sticks. Measure general lengths. Ask students to measure each others' height. Provide a brief order of magnitude comparison with yard and foot.

9 - Define "area" as length times length; hence the measure for area is m x m = m^2 (briefly explain exponential notation). Show a square meter. Measure the area of a table top.

10 - Explain that "volume" is length x length x length; hence m x m x m = m^3. Use examples of 1-, 2-, and 3-L bottles.

11 - Review and summarize all of the above material.

Sound

OBJECTIVE
Students will have a physical understanding of sound waves, sound emitters, the ear, and characteristics of sound such as pitch.

SUPPLIES
Instructor will need: Microphone
Amplifier
Oscilloscope
Audio oscillator
Sound effects generator
Speaker with exposed cone

LESSON
1 - Instructor will introduce self to students and explain how sound relates to activities in everyday life.

2 - Instructor will explain the various properties of sound, encourage discussion, and utilize equipment (listed above) during the lesson to help students better understand each concept.

Air pressure
Where pressure is high, air molecules are squeezed closer together. Molecules can be squeezed together in an air-tight container. Examples of high-pressure containers: can of hair spray or spray paint, balloon (only slightly high pressure), and air tank. Where pressure is low, molecules are spaced further apart from each other. When low pressure is strong, it is called a "vacuum." Examples of low pressure or vacuum: TV picture tube, outer space, vacuum cleaner (only slightly low pressure).

What is sound?
Sound is comprised of pressure waves moving out from a vibrating source, such as vocal cords, violin or guitar strings, car engine, wings of a fly, ringing bell, etc. Just a few strong pressure waves can move out to create a pressure burst. Examples of pressure bursts: dynamite, bursting balloon, hammer on wood, gun or cannon, clapping hands.

How does sound travel?
Sound travels as waves of high pressure and low pressure. Analogies include waves in a pond and radio waves. Waves become weaker as distance increases (sound becomes not as loud).

Vibrations create pressure waves.
Consider a vibrating speaker cone as it moves forward and backward very quickly. When it moves forward, it suddenly pushes air molecules together creating high pressure. When it moves back, it pulls air molecules away from each other creating a low pressure. So, as the speaker cone moves back and forth rapidly, it creates many areas of high and low pressure that move away from the speaker as waves. (Students feel vibrating woofer speaker cone.)

A vibrating string on a musical instrument also moves back and forth creating sound, as do a vibrating car motor or a ringing bell.

Hearing sound waves
Sound waves travel into ears causing small vibration of ear drum and two tiny bones connected to the ear drum. Sensitive nerves pick up the vibrations from those bones, and the sound information travels through the nerves to the brain.

Speed of Sound - How fast?
What is sound faster than? Faster than a turtle? Car? Fast baseball pitch? Race car? Plane? Space shuttle? Bullet? Speed of light? Although sound is fast (743 mph), it is not faster than a supersonic jet, space shuttle, bullet, or light (which travels at 670,000,000 mph).

We can sometimes observe that sound takes time to travel to us.
When you see lightning, it takes a while for the sound (thunder) to reach you, even though they both started from the same place at exactly the same time. The lightning (or light) always wins the race with sound.

When you yell and then hear an echo, you have to wait until the sound travels to a hill, is reflected, and comes back.

If you watch someone hammering a board several feet away from you, you will see the hammer come down on the board, then hear the sound a second or two later. Sound travels slowly enough that we can sometimes notice how slow it is.

Pitch or frequency of sound
When sound is squeaky-high, like chalk squeaking on a chalk board, or rumbling-low, like distant thunder, we call the difference pitch or frequency. A high pitch can often be annoying like the squeal from a TV. Low pitches can often be felt, as well as heard, such as the engine in a train passing in front of you.

The faster something vibrates, the higher the pitch. Slow vibrations create low pitches where the waves are further apart. [Demonstrate pitch with speaker, audio oscillator, and oscilloscope.]

The pitches that we can hear are said to be within our "range of hearing." Some animals can hear higher pitches than humans, such as dogs, rats, and bats.

People cannot hear very high pitches when they get older. People who listen to a lot of loud sounds for years (i.e., loud music, guns shooting, or loud machinery at work) loose some of their hearing, especially of high frequencies.

Loud volume levels and ear protection
Avoid loud sounds! If you are near loud noises, use hearing protection. Put your hands over your ears or leave the area. Sounds that make your ears ring are especially bad for your ears.

Direction

We can tell the direction that a sound comes from without looking because the sound reaches one ear sooner than it reaches the other ear, and our brain knows which ear heard the sound first. The sound is also louder in the ear closest to the sound. Also, our ears are shaped to make noises in front of us sound different from noises behind us.

Complexity of sound (optional)

Many sounds come to us at once, yet our amazing brains can tell them apart from one another. Many clues tell us what the various sounds are. Sounds start and stop at different speeds: slow — such as the sound of a gust of wind; fast — a fire cracker.

Timbre is the quality of sound. When you say that you like the sound of a saxophone, you are really saying that you like the timbre of a saxophone.

Timbre gives us recognition of many sounds:

violin	your friend's voice
trumpet	your teacher's voice
guitar	police siren
piano	a laugh
organ	sadness in a voice
sound of a jet	sound of leaves blowing in trees
a cow's "moo"	sound of the ocean waves

Timbre is the shape of the wave (i.e., rounded, square, pointed, etc.) as seen on an oscilloscope.

Dynamic range, echo, and vibrato also give unique qualities to sounds.

(Display complex sounds on oscilloscope using a sound effects generator. Display voice wave shapes using microphone, amp, and oscilloscope.)

Word Problems

OBJECTIVE
Students will develop better methods for approaching and working word problems using addition, subtraction, multiplication, and division.

SUPPLIES
Instructor will need: $15 play money
At least one pink or red eraser for each student

LESSON

1 - Introduce self while passing out worksheet, and explain how math is used at work. Ask students to use thumb signals when figuring out answers to problems (up indicates "understand," sideways indicates "maybe," and down indicates "do not know the answer").

2 - Review key words for addition and subtraction. Ask children to volunteer the words and write on blackboard.
Addition - "in all," "all together"
Subtraction - "more than," "less than," "how many fewer," "how many left"
Work problems 1, 2, and 3 on handout, asking students to underline key words.

a. Ask, "How many children have birthdays in March, April, or May?" (Have them first stand in three separate groups, then move into one group.) "How many children were born in the Spring?"

b. "How many children have birthdays in September, October, or November?" (have them stand in a separate group) "How many more/less children were born in the fall than in the spring?"

c. Pass out erasers and ask, "How many more/less students have pink than red?"

3 - Introduce key word for division ("each"); ask children to volunteer the words and write on blackboard.
Work problems 4 and 5 on handout.

a. Bring 3 children to front of class who were not in groups for first two problems, and use their names in the problem. Use play money and demonstrate answer with one for you and one for me — have one of the children do the actual passing out of the money.

4 - Introduce key words for multiplication (same as for addition because multiplication is a shortcut for addition). Look for groups in problems; see if adding the same number many times leads to the same answer as if the number is multiplied.
Work problems 6 and 7 on handout.

5 - Work examples showing how those basic math skills are actually used on the job:

a. Problem 8 - Draw picture of cylindrical tank inside rectangular dike on blackboard. Give background equations for volume of tank (not required, but adds interest - could also tell why dimensions had to be measured instead of just calculated) and volume of rectangular dike. Use tank length of 4 ft, radius of 3 ft - gives volume of approximately 110 $ft^{3;}$ use 120 ft^3 for safety. Use dike length of 8 ft and width of 5 ft. Ask students, "What should the height be?" W x L x H = V.

b. Problem 9 - Draw picture of tank with coils inside with ice building on them. (Perhaps ask if any have seen lots of frost/ice built up on inside of freezer.)

c. Problem 10 - Draw building with turbine/generator inside with smokestack on side.

d. Problem 11 - Using same power plant drawing, add numbers: 100-kW input in coal, 10-kW output up smokestack, 50-kW output in cooling water, 10-kW output in plant energy use, and 30-kW output in electricity. Work out efficiency with useful out/input. Now what if we use 25-kW of heat in discharge water for (district heating, or heating greenhouses, or cleaning/desalinating water) useful purpose so that now there is only a discharge 25 kW in cooling water? How does this change out efficiency? (now have sum of 30 + 25 divided by 100 — have gone form 30% to 55%, almost doubled use of resources.)

1. _____ children were born in March, _____ children were born in April, and _____ children were born in May. How many children in all were born in the Spring? _____

2. _____ children were born in the spring and _____ children were born in the fall. How many more/less children were born in the fall than in the spring? _____

3. _____ children have pink erasers and _____ children have red erasers. How many more/less have pink than red? _____

4. _____, _____, and _____ decided to earn some money by having a garage sale and selling their old toys. If they earned a total of $15, how much money did each child get? _____

5. Mom bought a dozen pencils for her three children. How many pencils did each child get? _____

6. Last summer the Stovalls drove to visit MaMaw and PaPaw three times. The round trip is 800 miles. How many miles in all did they drive? _____

7. If you walk six blocks to school in the morning and six blocks home, how many blocks do you walk all together in a day? _____
How many blocks do you walk in all in a week? _____
Challenge: how many blocks in all if you also walk home for lunch each day?_____

8. A tank held 120 gallons of a dangerous chemical. We had to build a dike around it so that if the tank broke, we would catch all the chemical. The wall could only be five feet wide and eight feet long. How high did it have to be? (hint - width × length × height = volume)
_____

9. Using a large ice maker, we made 30 tons of ice in 6 hours. How many tons of ice did we make each hour? _____

10. If a power plant generates 100 kW of power, but has to use 1 kW of power to run the control system and has to use 6 kW of power to clean up the gases going up the smokestack, how much power is left to sell to customers? _____

11. A power plant uses (inputs) 100 kW in heat from coal. The plant outputs: 10 kW of heat in smokestack gases, 50 kW in heat in the cooling water, 10 kW in energy for plant controls, and 30 kW in electricity. What is the plants efficiency? (hint - Efficiency is useful energy output multiplied by 100, then divided by energy input.) _____

Now, what if we use 25 kW of heat in cooling water for a useful purpose (this is called cogeneration). How does this change our efficiency? _____ (Answer - efficiency has increased from 30% to 55%. Higher efficiencies are much better - they save money, save resources, and reduce pollution.)

Extra problems:

1. Jack and Jane bought two hamsters. If mama and papa hamster produce four babies per month, how many babies in all will they have in a year? _____

2. If Jack and Jane have 8 friends to give these baby hamsters to, how many hamsters will each friend get? _____

3. If Jack's friend, Scott, got the first six baby hamsters, and they grew up and had nine more babies, how many hamsters would Scott have in all? _____

4. Will Jack and Jane ever learn to keep each hamster in its own cage?

_____

5. Jack had collected 147 baseball cards. He bought a new set with 20 more baseball cards. How many cards did he have altogether?

_____

Later, Jack noticed that 5 of the new cards were the same as cards he already had, so he sold them to Paul. How many cards did Jack have left? _____

6. Veronica had saved $29.30. She bought a Nintendo game for $27.30. How much money did she have left? _____

7. Veronica had saved $29.30. She wanted a Nintendo GameBoy that cost $111.20. How much more money does she need? _____

8. Jill's family was going to Disneyworld, 600 miles away. The first day they drove 400 miles. How many miles were left to drive the second day? _____

9. Jimmie bought 10 pieces of candy. He ate two pieces and gave three away. How many pieces of candy did he have left? _____

10. Amy got $.35 change after she bought a bag of cookies for $2.39 and package of lunchmeat for $2.26. How much money in all did she give to the clerk? _____

4.5 ADDITIONAL ACTIVITIES

ETD's science and math education support activities extend beyond classroom presentations to the third grade. Most team members were already involved in educational support before this program was implemented. Many of the lessons were presented at other schools, tailored to suit other grades, and were often presented by other team members (utilizing the same equipment and materials). ETD became a technical resource to many schools in several surrounding counties.

During the school year in which ETD's support program was initiated, the elementary school's Board of Education mandated that all students in the county's schools in grades K-12 participate in a county-wide Science Fair. As a result of this county-wide emphasis on science, ETD had the opportunity to provide technical judges for over 650 science projects in grades K-8 at the elementary school in which they were making presentations. As part of the Science Fair judging, ETD team members talked with all students at the school about their project, about what they learned about science, and about how science applied to other activities. Most importantly, team members provided positive feedback and encouragement to each student about how he or she performed in science and math.

Team members served as judges for other area science and inventor's fairs, as mentors to students preparing science projects, and as tutors to students wanting help in science and math. ETD also served as sponsors to high school and elementary school teachers who participated in summer internships, working in ETD for eight weeks to broaden their understanding of the application of basic skills in current technology. Students, teachers, and team members came to realize that people are any organization's greatest resource, far more valuable than equipment and materials. ETD's education support program is one of people helping people.

Third grade science teachers from Oliver Springs Elementary School tour Engineering Technology Division facilities.

5. EVALUATING THE PROGRAM

5.1 TEACHER EVALUATION OF THE PRESENTATIONS

Every presenter wants to know, "How did I do?" To answer this question, ETD developed an easy-to-use "Lesson Evaluation" form shown on the following page. The classroom teacher completed this evaluation for each lesson. Additionally, the teacher videotaped each presentation. The recording was used to review the lesson a second time and serves as a teaching tool that can be shared with other teachers and other schools.

5.2 STUDENT IMPRESSIONS OF THE PROGRAM

At the close of the school year, the ETD coordinator met with each of the third-grade classes to find out how the students felt about the program. A large chart listing each topic presented was tacked to the front of the classroom. The coordinator briefly reviewed the topics and activities that were used to help remind students of all the lessons presented throughout the year. The coordinator then asked the following questions:

1. What do you think of when you think of "science?"
2. How do you use math and science when you are away from school?
3. How do other family members use math and science at home and at work?
4. How do you like to learn about math and science?
5. What lesson did you like most? (asked of each student)
6. What other math or science topic do you wish there had been a lesson on?

When asked the first question of what "science" made them think of, students responded with "experiments," which one student defined as "something done to prove or disprove a point." Another student said, "You learn new things about [science]."

When asked how they used math and science away from the school, students listed keeping track of their money, collecting things, figuring gas mileage, reading about science, making a mixture (making a salad or mixing oil and gasoline for use in a weedeater), and cooking (mixing, measuring, and heating).

Students recognized that other family members used math and science at home and at work in obvious tasks such as counting money or stock, but students also realized that

Lesson Evaluation

Topic _____

Speaker _____ Date _____

Please rate on basis of appropriateness for this grade level

	Excellent	Good	Fair
Content			
Explanation of details			
Activity/Activities			
Use of Audio Visual Aids			

Please provide any additional comments which could serve to guide us in improving our education program in the areas of:

Content - How well did we address the topic? _____

Explanation of details - Did the students understand the lesson?

Activity - What activity/activities did the speaker use? _____

Did the activity/activities serve to reinforce the topic?

Did the students enjoy the activities? ___Yes ___No

Could you recommend any activities that might be used in addition to or in place of this activity? _____

Overall comments: _____

Please return this form to Cathy Wagner,
Engineering Technology Division, ORNL.

science and math skills are present in using or repairing a computer, baking, and working as a carpenter or an operator in a steam plant. One student's mother was collecting data as part of a health study.

When discussing the way they liked to learn about math and science, unanimously the students agreed that, "The best way to learn something is by doing it." Students also like opportunities to "go to a place where they do science."

When asked what lessons had been enjoyed most, science topics fared better than math topics. Of the topics presented, Bees, Computers, Electricity, Graphs, Light, Sound, and the field trip to Bull Run Steam Plant were mentioned most often. All topics were mentioned by at least one student as being a favorite — illustrating the importance of variety in trying to capture students' interest.

Asking about topics that were not presented is important not only in evaluating possible deficiencies in an existing program, but also in planning for expansion of the program for the following school year. What topics were on the students' "wish list?" Chemistry was discussed most often, followed by animals, the human body, health, environments (e.g., rain forest), volcanos, static electricity, plants, and robots.

No current standardized attitudinal survey exists for evaluating student's impressions or observations about science or math. While several standardized tests cover skills, no test is available to explore beyond fundamental skills at the third-grade level. The ETD coordinator did find one attitudinal survey for science that was developed in the early 1970s, which had been taken off the market because it had become quite out of date. Standardized attitudinal surveys for older students are available, but there is no advantage in discovering that a high-school student cannot broadly apply the basic science and math skills and concepts that should have been mastered in the lower elementary grades.

5.3 MAKING CHANGES

Just as presenters encouraged students to define science as a "process" of discovery and to remain open to a variety of possible outcomes when performing experiments and research, ETD also looked upon the total educational support program with an open mind, ready to make changes as needed. At the end of the school year, the classroom teachers, ETD management, presenters, and the ETD coordinator began planning for the coming school year based on several lessons learned.

The most significant change in the program will be in the scheduling of presentations. Initially, classroom teachers and presenters had felt that a weekly schedule of presentations would provide more contact with the students — allowing ETD personnel to better serve as a resource to the school. In practice, though, covering a new topic each week gave the teacher little time for lead or followup activities to reinforce the concepts presented. Additionally, other school activities related to holidays, field trips, and schoolwide programs (such as the Science Fair) do add to the overall learning experience for students, but do subtract from the time available for regular classroom instruction. As a result, the planned schedule of presentations for the coming school year will list approximately 12 third-grade presentations to be made every other week from fall through early spring.

The elimination of some topics was based on several factors. Student impressions (Section 5.2) were important. Their comments told teachers and presenters what subjects and types of presentations were most liked and best remembered. Teacher learning also played a key role in the selection — as presentations were made and videotaped, the classroom teacher learned new approaches to teaching science and math skills. Many presentations (especially those which utilize basic "on-hand" supplies and equipment) can now be replicated by that classroom teacher.

Decreasing the number of third-grade presentations by almost 50% also allowed ETD to continue with its planned expansion into the fourth grade in the coming year with little or no increase in time and labor. The planning process outlined in Section 3.4 will now take place with the fourth-grade classroom teachers to select 12 topics to be presented next school year.

5.4 EVALUATING THE TOTAL PROGRAM

While positive comments about specific presentations and activities are encouraging, most technical personnel are eager to search for data that will more concretely reflect the contributions made by a science and math education support program. Comparing standardized test scores from the previous year with the current year may be tempting, but it is important to remember that those tests measure only basic skills and do not reflect the broader applications and dynamic concepts presented. Even to accurately compare scores of basic skills, the industry would need access to standardized test scores for the past five years

for a particular grade, plus five years of test scores after the program had been in place to obtain a sufficient quantity of data for averaging.

High-school dropout rates and numbers of students enrolling in high-school elective science and math courses might be numbers that would reflect the positive impact of the education support program, but industry would need to wait until students in the target grade or grades graduated from high school. Such long-range evaluation certainly bears some consideration, and for an industry with the intent of continuing its program, collecting that data each year would be beneficial.

While it is comforting to be able to analyze data that shows the measure of success of such a program, more likely industry will need to rely on less formal feedback. Positive comments from teachers and students, presenters who feel that they reached the students, and administrators from industry and education who want to continue that program in coming years are all excellent measures of success. If a program touches the life of one child each year, and if that child graduates from high school with a better self image about what he or she can accomplish and becomes a more productive citizen, then, without a doubt, the program is successful.

Oliver Springs Elementary School third period, third grade science class.

6. SUMMARY

Science and math education is indeed vital to survival and success in an increasingly technical world. Rather than expending time and effort placing blame for declining science and math academic scores among our nation's students, that energy can be used to address the problem. Survey within industry for strengths and resources and within local schools for needs. A successful education support program will capitalize on matching those resources and needs. At every step in the program planning process, take time to communicate. Translate ideas and opinions into data to help ensure that goals are directed by the team developing an education support program.

If classroom presentations are made, they should focus on student participation to allow students to learn by doing. Presentations should be very "process," rather than "product," oriented to minimize students' perceptions of failure or success. Students need to be a part of the science or math lesson and complete the lesson feeling good about what they have done.

Science and math skills must be presented in the context of everyday living. Multiplication and division are just as important to the grocery shopper hunting for the best unit pricing in laundry detergent as they are to the engineer calculating surface areas in a turbine. Students need to see science and math as part of their lives, no matter what their career choices will be.

Schools and industry must take care in evaluating the impact of an education support program. Perceptions of success or failure should not be guided by standardized test scores that measure only academic performance.

To make great strides in improving science and math education at a national level, much needs to be done. Many hands make work light. Schools and industry can work together to reach our national goal for science and math education:

America 2000: An Education Strategy

Goal 4: By the year 2000, U.S. students will be first in the world in science and mathematics achievement.

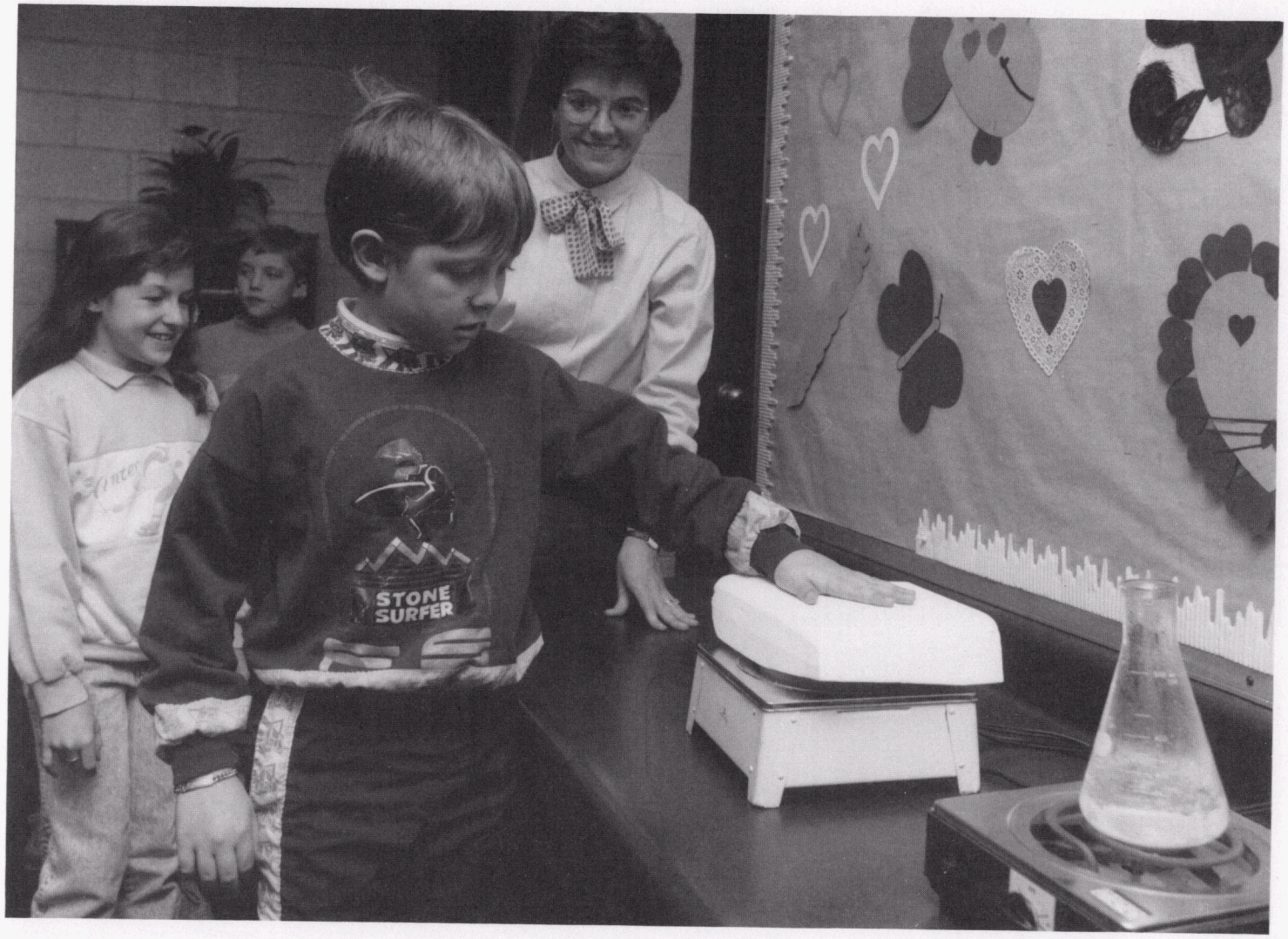

A ceramic engineer guides third grade students through hands-on science activities involving a space shuttle tile.

REFERENCES

1. United States Department of Energy, *National Energy Strategy*, 1st Ed., Washington, D.C., 1991/1992, p. 212.

2. United States National Commission on Excellence in Education, *A Nation At Risk: The Imperative Educational Reform: A Report to the Nation and the Secretary of Education, United States Department of Education*, National Commission on Excellence in Education, Washington D.C., 1983.

3. J. D. Watkins and G. T. Seaborg, *Math/Science Education Action Conference, Lawrence Hall of Science, October 9-10, 1989, Chairmen's Statement*, Washington, D.C., 1989.

4. E. Victor, *Science for the Elementary School*, MacMillan Publishing Company, Inc., New York, 1975, pp. 4-7.

Third grade students explore the field of ceramic engineering during National Engineer's week.

APPENDIX A

TENNESSEE STATE CURRICULUM FRAMEWORK FOR GRADES K-8

KINDERGARTEN FRAMEWORK

Language Arts

021B1 be aware of certain basic literary forms
021D1 be aware of the relationship of sequence to comprehension
021E1 be aware of details in stories and pictures
021F1 be aware of the relationship between title and main idea
021G1 be aware of prediction as a means to comprehension
021H1 be aware of characterization as an element of comprehension
021I1 be aware of factors involved in supporting a conclusion
021J1 be aware of cause and effect as a means to comprehension
022B1 be aware of the relationship between letters, sounds, and words
023A1 be aware of the use of library and reference materials
024A1 develop an appreciation of literature for practice and pleasure
031A1 demonstrate physical readiness for handwriting
033A1 understand discrimination of sounds
033A4 understand basic sound/symbol relationship
033D1 understand sequencing of patterns
033D3 understand how to reproduce the alphabet
034A1 understand word units
034B1 understand story organization
034D1 be aware of the relationship of creative thinking to writing
035A1 develop critical and creative thinking skills
036A1 understand the relationship of listening skills to recalling and reacting to information
036B1 be aware of analyzing, interpreting, and judging information in listening
037A1 understand oral communication is a means of effective self-expression

Mathematics

011A1 understand comparing objects and groups of objects
011A2 be aware of sets
011A3 understand sequencing
011A4 understand the relationship between numbers and objects (one-to-one correspondence including zero)
011B1 understand the concept of addition
011B2 understand the concept of subtraction
011C1 understand the concept of halves
011D1 be aware of graphic representation
011D2 be aware of estimation (reasonableness, prediction)
011E1 be aware of problem solving processes
011E2 be aware of patterns
011F1 understand measurement processes
011F2 be aware of instruments of measurement
011G1 understand geometric shapes
011G2 understand the relative position of objects
011G3 understand comparing objects with respect to shape, color and size

Music

081A3 understand steady beat
081A4 understand long and short; high and low sounds
081B3 develop a repertoire of children's songs
081C1 understand music can be fast or slow; loud or soft
081C3 be aware of the uniqueness of sounds
081D1 be aware that phrases and patterns in music can be the same or different
081F2 be aware that folk songs, dances, and types of instruments from various cultures can be different

Art

071A1 be aware people create many types of art in many different ways
071F2 be aware art is created with a variety of materials, tools and techniques
071B3 be aware original art is the result of creative thinking, observation and problem solving
071B5 be aware art has subject matter, themes and symbols
071B6 be aware art has things that are similar and things that are different
071E1 be aware of the use of elements of art such as lines, shapes, textures, colors
071C2 be aware many careers involve art knowledge and skills
071C5 be aware museums house and preserve art
071B2 be aware of ways to talk about a work of art
071F2 be aware of safety in using art tools

Physical Education

091A1 be aware of the relationship of basic locomotor skills to various games and sports
091A2 be aware of the importance of manipulative skills to many games and sports
091A3 be aware of spatial relationships in games and sports
091B1 understand rules of safety
091B2 be aware of self-testing in the field of gymnastics
091B3 understand various beginner skills of gymnastics
091B4 demonstrate confidence in movement as body control is developed
091C1 be aware of the role of body movement and control in developing fitness
091D1 be aware of the relationship between music or rhythmic body movement and accompaniment
091D2 be aware of the interrelationship of body movement, space and time
091D3 be aware of the role of body movement in the expression of feeling and ideas

Technology

001B1 be aware of major computer components
001B2 be aware of the function of each of the major components
001B3 know proper sequence for turning on and off computer
001B4 be aware of the operation of menu-driven software
001B7 be aware of the proper care of computer equipment
001C4 be aware technology is used in our daily lives (home, school, business)
001D1 be aware of developing strategies for performing tasks

KINDERGARTEN FRAMEWORK

Individual Awareness

041A1 understand individuals have a space
041B1 understand individuals have a personal history
041C2 understand the need for rules of daily living and fair treatment of others
041E1 understand the worth of each individual
052G1 be aware of similarities and differences among individuals
041E4 understand the behavior of individuals may be changed by relationships with others
041D3 understand individuals choose jobs they like and can do well
042C5 understand cooperation is necessary when working within large and small groups to complete tasks
061A3 understand individual responsibilities in promoting good health
061B1 be aware of the role of the individual as a health consumer
061C1 understand individual responsibility in the prevention of illness
061F3 be aware of healthy ways in which feelings, emotions and problems may be expressed and ways to deal with unpleasant situations
061H2 be aware of the five senses and match the body parts with each one

Growth and Development

051E1 understand some animal young are like the adult
052E2 understand animals' habitats
052E3 understand how seasonal changes affect animals
052F1 understand how plants grow and change
061K2 understand good health practices
061G1 understand what constitutes a balanced diet
061G2 identify various foods within the four food groups
061G3 understand what constitutes healthy snacks
061G4 be aware of the seven dietary guidelines
061C2 be aware of practices and resources important in the treatment of illnesses
061J1 understand the role of medicines and drugs in keeping people healthy
061J2 understand safe practices in the use of medicines and drugs
061J3 be aware of the importance of choosing not to smoke
061K1 be aware of communicable diseases, including AIDS

Families

042B1 be aware each family has a family tree
042C1 understand families need rules
041D1 understand individuals meet their needs/wants in different ways
042E3 be aware families change
042F1 understand every culture has a family unit which determines the way families do things
061D3 be aware of variations in size and structure of family units
061E2 understand individual uniqueness and importance in family life

Communities/Cultures

041A3 be aware what a globe and map represent
041C4 be aware the laws and rules we follow are decided by the people (school, community, country)
041C5 be aware a person born into a country is a citizen of that country
041E5 understand individuals learn to do things from their culture
043F1 be aware of the contributions of different cultures
041F2 understand some differences among people are a result of their culture
043F2 be aware of similarities and differences of food, clothes, homes, games and families in different cultures
042A2 develop an understanding of the spatial relationship of the home to the school
061A1 be aware of various local communities of which students are a part
042B3 be aware schools have changed through the years
041D2 know people usually work to meet their needs by doing different jobs
041D4 understand all jobs are important and some jobs are dependent on other jobs
041E6 be aware many jobs require people work together
043D2 be aware how jobs are similar/different from one community to another
061A2 identify various health helpers and their roles in the community

Safety and Transportation

044A1 be aware people travel from place to place by different means of transportation
044A2 know land and water forms affect types of transportation
044B1 understand means of transportation have changed over the years and will continue to change
044D1 understand people pay to use public transportation
044D2 be aware different types of transportation provide jobs for people
044F2 know means of transportation may differ in different cultures
044C2 know signs, symbols and signals of safety
051B1 understand the importance of observing safety rules in using electricity
061I1 understand safety rules to be followed in all daily activities

Environment

041A2 know individuals live in an environment and environments differ
042F2 understand people need shelter and shelters differ according to the culture and the environment
045A1 know different aspects of the environment including landforms, water, natural and manmade features
045C1 understand there are rules to protect the environment
045D3 be aware of jobs related to working with and protecting the environment
054O1 be aware of how people affect their environment (past, present and future)
061D1 be aware of various kinds of pollution within the immediate environment
061D2 be aware of ways of controlling pollution
045D2 be aware pollution can be detrimental to personal health and jobs
045F1 be aware pollution of one area of the environment may affect other areas of the total environment
045E2 be aware of the ways people use environmental resources as determined by their culture
051C1 understand the basic properties of sound
053K1 understand various weather conditions
053L1 be aware of the properties of rocks
041B2 understand things change over time

FIRST GRADE FRAMEWORK

Language Arts

121A1 demonstrate appropriate use of oral language
121A2 understand sentence structure as a means to comprehension
121A3 understand how to identify, describe and categorize information
121C1 understand the relationship of sight word development, context and word meaning to comprehension
121D1 understand the role of sequencing in comprehension
121E1 be aware of the relationship of details to comprehension
121F1 understand main idea/central message in reading comprehension
121G1 be aware of the role of prediction in comprehension
121H1 be aware of characterization as an element of comprehension
121I1 be aware of the factors involved in supporting a conclusion
121J1 understand cause/effect as a means to comprehension
121K1 be aware of the use of critical thinking in evaluating material
122C1 understand how phonetic development expands vocabulary through the use of structural analysis in word recognition
123A1 be aware of the use of library and reference materials
123B1 understand how to use correct study skills
124A1 develop an appreciation of literature for practice and pleasure
124A2 understand basic literary forms
131A1 demonstrate physical readiness for handwriting
132C1 understand the use of capitalization and punctuation
133A1 understand the sound/symbol relationship to spelling
133C1 understand the roles of proofreading, word meaning and word building skills in spelling
134A1 understand the elements of a complete sentence (subject and predicate)
134B1 be aware of story and paragraph organization
134D1 understand the relationship of creative thinking to writing
134E1 be aware of functional writing
134F1 be aware of revision and proofreading skills
135A1 develop critical and creative thinking skills
136A1 understand the relationship of listening skills to recalling and reacting to information
136B1 be aware of analyzing, interpreting and judging information in listening
137A1 know the relationship between vocabulary development, oral and written communication
137B1 communicate effectively
137C1 demonstrate effective self-expression

Mathematics

111A1 understand the relative value of numbers
111A2 understand numerical sequence
111A3 understand counting numbers
111A4 understand reading numbers
111A5 understand written numerical representation
111B1 understand concept and computation of addition and subtraction
111C1 understand parts of a whole
111D1 understand graphic representation
111D2 be aware of estimation (reasonableness, prediction)
111E1 understand number sentences
111E2 understand grouping in problem solving
111E3 be aware of the interpretation of data
111E4 be aware of pattern development
111F1 understand comparing objects by weight, length, warmth, volume and monetary value
111F2 be aware of time, length, weight, temperature, and monetary units of measure
111G1 understand geometric shapes

Music

181A3 understand steady beat
181A4 understand long and short, high and low sounds
181B3 develop a repertoire of children's songs
181C1 understand music can be fast or slow; loud or soft
181C3 be aware of the uniqueness of sounds
181D1 be aware that phrases and patterns in music can be the same or different
181F2 be aware that folk songs, dances, and types of instruments from various cultures can be different

Art

171F2 be aware art is created with a variety of materials, tools and techniques
171B3 be aware original art is the result of creative thinking, observation and problem solving
171D1 be aware artists are influenced by their environment
171E1 be aware of the use of elements of art such as lines, shapes, textures, colors
171E2 be aware of some principles of design: point of emphasis, balance, space, repetition, contrast
171B5 be aware art has subject matter, themes and symbols
171B6 be aware art has things that are similar and things that are different
171C5 be aware museums house and preserve art

Physical Education

191A1 understand the relationship of basic locomotor skills to various games and sports
191A4 develop balance
191B1 understand and demonstrate knowledge of safety rules
191A2 understand the manipulative skills involved in games and sports
191A3 understand social relationships in games and sports' situations
191B2 be aware of self-testing in the field of gymnastics
191B3 increase body control and confidence in movement
191B4 understand gymnastics and movement vocabulary
191C1 understand the relationship between body movement and fitness
191D1 understand the relationship between music or rhythmic accompaniment and body movement
191D2 understand the role of body movement in the expression of feelings and ideas
191D3 be aware of the role of rhythmic activities in social development

Technology

101B1 understand major computer components
101B2 understand function of each of the major components
101B3 know proper sequence for turning on and off computer
101B4 understand operation of menu-driven software
101B7 be aware of the proper care of computer equipment
101C4 be aware technology is used in our daily lives (home, school, business)
101D1 be aware of developing strategies for performing tasks
101D4 be aware of rudimentary statements of a language such as LOGO

FIRST GRADE FRAMEWORK

Neighbors

141B1 understand neighborhoods began at a certain point in time and change in size and appearance over time
141C2 understand people in neighborhoods are interdependent and respect other's rights and property
141C4 understand people have a responsibility to obey laws in order for neighborhoods to be safe
141D4 understand some people work in their neighborhood, while others go to different neighborhoods to work
141E1 understand individuals and families are parts of neighborhoods and these neighborhoods change
141F1 understand various types of neighborhoods
141F2 understand some neighborhoods have many cultural groups while others have only one
141F3 understand people may move and become part of a different neighborhood
143C3 understand citizenship responsibilities

Geography

141A3 be aware of the use of symbols to represent places on graphs and maps
141A4 be aware of distance from home to school
145A1 be aware how land masses and bodies of water are represented on globes or maps
145A2 know the geographic location of the United States and Tennessee on a globe or a map
145A4 be aware of directions on a globe or a map
153J1 understand earth as our home planet
153J2 understand how shadows are created
153J3 be aware of the relationship of the earth and sun in changing from day to night

Cultures

144F1 be aware people use different languages to communicate with one another
145C1 be aware of family and school rules as compared with those in another culture
145E2 understand the importance of families, homes and schools in other cultures
145D1 understand the diversity of jobs among cultures
145E1 be aware people learn customs from their culture
145F1 understand there are similarities and differences among people around the world

Community Services

141D1 be aware of the terms goods and services and how they are produced/provided.
142B1 understand the role of the worker has changed over the years
142C1 understand police enforce the laws but do not make them
142D1 understand workers who provide services earn money to meet needs and wants
142D2 be aware people pay for services such as police and fire fighters with revenue from taxes
142E1 understand the importance of service workers in neighborhoods
142E2 understand community governments employ various service workers
161A1 understand individuals' roles and responsibilities as members of various local communities

Environment

141A1 understand environment affects the way homes are built
142A1 understand the type of workers needed is often dependent upon the environment
152F1 understand the basic needs and uses of various plants and plant parts
154P2 understand various roles plants and animals play in the environment
161D1 identify causes and effects of pollution
161D3 recognize the effects of overcrowding on the environment
153L1 understand how fossils reveal the past
151D2 be aware of the properties of matter and that matter changes

Early Settlers

143A1 understand how geography affected early settlements
143B1 understand roles of the first groups of settlers in this country
145B1 be aware another country may be older than the United States
145B2 understand how our country has changed from the first settlement to the present

Communication

144A1 be aware people can communicate over long distances
144A2 understand how natural causes may interrupt or destroy means of communication
144B1 be aware of some early forms of communication and how inventions have improved communication
144D1 understand some means of communication cost money
144D2 understand people advertise goods and services through different forms of communication

Health and Safety

161A2 identify characteristics of a healthy person
161A4 be aware of healthy community characteristics
161A3 understand the importance and role of various workers to promote good health
161C1 understand how germs may be transmitted
161C2 understand ways of preventing and controlling disease
161C3 understand the definition of communicable disease, including Aids
161J1 understand varying use/misuse of drugs/medicines and their effects on individuals
161J2 understand the definition of "drug" including alcohol and nicotine
161I1 understand the importance of first aid and emergency assistance
161I2 identify ways of preventing accidents
151A1 understand safety in the use of machines

Growth and Development

143C1 understand individuals have responsibilities to the group whether as a leader or as a member
143C2 understand cooperation is necessary in working with a group to complete a task
143E1 understand people belong to different groups for different reasons
161E1 be aware of the effect of family relationships upon mental and emotional health
161E3 understand the roles, responsibilities and abilities of family members
161F1 be aware of factors contributing to individuality
161F2 be aware of the importance of expressing emotions in healthy ways
161F3 identify feelings accompanying growth, change and loss
152H1 be aware of characteristics of living things
152E2 understand how humans are alike and different from other animals
161E2 understand all living things grow, develop and produce their own kind
152E1 understand the basic needs of all animals
152E3 understand ways animals are grouped
152H2 understand the differences among living, once living and non-living things
154P1 understand how plants and animals are beneficial to each other
161B1 understand how health information may be obtained
161H1 understand basic factors affecting human growth, development and personal health
161G3 understand food as a source of energy and growth provided by a healthy diet
161B3 understand the importance of telling an adult about child abuse
161I3 be aware of sexual abuse and knowledge of assertive self protection skills

SECOND GRADE FRAMEWORK

Language Arts

221A2 understand the skills necessary for reading with proper expression
221A3 understand the terminology of time relationships
221C1 be aware of the relationship of sight word development, context and word meaning to comprehension
221D1 understand the role of sequencing in comprehension
221E1 understand the relationship of details to comprehension
221F1 understand main idea/central message in reading comprehension
221G1 understand the role of prediction in comprehension
221H1 understand characterization as an element of comprehension
221I1 understand the factors involved in supporting a conclusion
221J1 be aware of cause and effect as a means to comprehension
221K1 understand the use of story elements in evaluating material
222C1 understand how phonetic development expands vocabulary through the use of structural analysis in word recognition
223A1 understand the use of library and reference material
223B1 be aware of how to use correct study skills
224A1 understand the use of literature for practice and pleasure
224A2 be aware of basic literary forms
231A2 understand and demonstrate the standards of legibility in handwriting
232C1 understand the use of capitalization and punctuation
233A1 understand the sound/symbol relationship to spelling
233C1 understand the roles of proofreading, word meaning and word building skills in spelling
234A1 understand the elements of a complete sentence (subject and predicate)
234B1 understand simple paragraph organization and development
234C1 be aware of the elements of style in written composition
234D1 understand the relationship of creative thinking to writing
234E1 be aware of functional writing
234F1 understand revision and proofreading skills
235A1 develop critical and creative thinking skills
236A1 understand the relationship of listening skills to recalling and reacting to information
236B1 understand analyzing, interpreting and judging information in listening
237A1 understand the relationship between vocabulary development, oral and written communication
237B1 use standard English in communicating effectively
237C1 demonstrate effective self-expression

Mathematics

211A1 understand written numerical representation
211A2 understand the relative value of numbers
211A3 understand numerical progression
211A4 understand comparing numbers (whole, fractional)
211B1 understand concept and computation of addition and subtraction
211B5 understand multiplication
211C1 understand fractional representation
211D1 understand the use of graphic representation
211D2 understand estimation (reasonableness, prediction)
211E1 understand number sentences
211E2 understand solving problems involving currency
211E3 understand solving problems involving time
211E4 understand the use of illustrative information
211E5 understand the use of patterns
211F1 understand units of measure
211F2 be aware of U.S and metric standards of measure
211G1 understand two and three dimensional geometric figures

Music

281A3 understand steady beat
281A4 understand long and short, high and low sounds
281B3 develop a repertoire of children's songs
281C1 understand music can be fast or slow; loud or soft
281C3 be aware of the uniqueness of sounds
281D1 be aware that phrases and patterns in music can be the same or different
281F2 be aware that folk songs, dances, and types of instruments from various cultures can be different

Art

271F2 be aware art is created with a variety of materials, tools and techniques
271B3 be aware original art is the result of creative thinking, observation and problem solving
271D1 be aware artists are influenced by their environment
271E1 be aware of the use of elements of art such as lines, shapes, textures, colors
271E2 be aware of some principles of design: point of emphasis, balance, space, repetition, contrast
271B5 be aware art has subject matter, themes and symbols
271B6 be aware art has things that are similar and things that are different
271C5 be aware museums house and preserve art

Physical Education

291A1 understand the relationship of basic locomotor skills to games and sports
291A2 understand the manipulative skills involved in games and sports
291A3 understand spatial relationships in object manipulation
291B1 understand and demonstrate knowledge of safety rules in physical activities
291B2 understand self-testing in the field of gymnastics
291B3 understand equipment usage in physical activities
291B4 increase body control and confidence in movement
291B5 understand movement vocabulary
291C1 understand the relationship between body movement and the fitness of body parts
291C2 understand the relationship between body movement and body composition
291D1 understand the relationship between music or rhythmic accompaniment and body movement
291D2 understand the role of body movement in the expression of feelings and ideas
291D3 understand the role of rhythmic activities in social development

Technology

201B1 understand major computer components and their functions
201B3 know proper sequence for turning on and off computer
201B4 understand operation of menu-driven software
201B7 understand the proper care of computer equipment
201C4 be aware technology is used in our daily lives (home, school, business)
201D1 develop a strategy for performing a task
201D4 understand rudimentary statements of a language such as LOGO

SECOND GRADE FRAMEWORK

Growth and Development

242B1 be aware each individual is a member of different groups in the community
242C2 understand how to share and give opinions in a group
242C3 be aware each group has a leader who has responsibilities to the group
242E2 understand individuals have a role in each group in which they participate
242E4 understand each individual must make decisions about work and play groups in which they participate
261E1 be aware of the rights of individuals to participate in activities related to personal interests
261E3 understand the importance of sharing feelings
261A2 understand how good health practices promote individual and community health
261C1 be aware of some of the causes of illness
261C3 be aware of measures for preventing and controlling disease
261K1 be aware of communicable diseases, including AIDS
261G1 understand how dietary habits affect health and the factors which influence those habits
261J1 understand the proper and improper uses of medicines, drugs, and alcohol
252H1 understand the stages in the life cycle of selected organisms
252E1 understand distinguishing traits of insects and spiders

Government

241C1 be aware communities have different laws depending on the needs and problems of the people
241C2 be aware every community has some form of government
243B1 be aware laws have changed as communities changed
243C3 be aware people have responsibilities and rights under the laws of the community
243F1 be aware laws around the world are similar, but some cultural groups may emphasize the importance of different responsibilities and rights

Environment

241A2 be aware communities must adapt to factors in the environment
241A3 be aware the environment can be adapted to meet needs
254O1 understand how various activities affect the environment
261D3 understand ways in which people consume and conserve resources
261D1 identify ways to reduce pollution
251C1 understand how sound is produced and transmitted and the sources of sound pollution
253K1 understand the weather cycle
253K2 understand how cloud formations relate to weather conditions
253M2 understand resources provided by bodies of water

Energy

254N1 be aware of various types of energy
251C3 understand the sources and uses of heat and light and the relationship between heat and light
251C5 understand how heat energy affects matter
254N2 understand how energy is used in our environment and the importance of conserving energy

Safety

242C1 understand school safety rules
251B1 understand safety rules when using electricity
251B2 understand types and uses of electricity
261I2 understand the role of the individual in accident prevention
261I3 understand self protection skills
261J2 understand the effects of medicine, drugs and alcohol on the completion of goals and on families and friends

Communities/Cultures

241B1 understand why communities form
241B2 understand why some communities developed in a specific location
241D2 understand many communities have specialized work resulting in trade and interdependence with other communities
241E1 be aware communities have customs and cultures that differ
241F1 be aware communities around the world are interdependent
242F1 understand different cultures have different roles for members of their groups
244B1 understand other cultures have ties to the American past
244B2 be aware most cultures preserve important things from the past
244C1 be aware cultures have a strong tradition of loyalty to their country
261D2 recognize the existence and reasons for hunger in the world

Family

242D1 understand the family serves as a unit through which the basic needs are provided
242E1 understand individuals belong to groups, but identity is still obtained
261E2 identify ways to resolve differences within families
261F3 understand the importance of positive interpersonal relationships
261F1 identify components of a healthy self-concept
261F2 understand the relationship between self-concept and personality

Geography

244A1 understand a large area may be shown on a small map
244A2 know the location of specific areas on maps
253M1 be aware of different bodies of water

Community Resources and Services

243C1 be aware communities have people who make the laws and people who enforce them
243D2 understand money obtained from citizens is used to fund various community services
243E2 know people may choose careers working with the laws
244D1 know the major exports of the United States
244D2 understand the necessity of importing resources needed for industry
261B1 identify differences among health products and services
261B2 understand how consumers are protected by laws and regulations related to health products and services
261B3 understand special health services are available for visual and hearing impaired individuals
261I1 understand the role of various community resources in providing assistance for accidents and illness

THIRD GRADE FRAMEWORK

Language Arts

321A1 understand reading with proper expression
321C1 understand the relationship of sight word development, context and word meaning to comprehension
321D1 understand the role of sequencing in comprehension
321E1 understand how details enhance comprehension
321F1 understand main idea/ central message in reading comprehension
321G1 understand the role of prediction in comprehension
321H1 understand characterization as an element of comprehension
321I1 understand the factors involved in supporting a conclusion
321J1 understand cause and effect as a means to comprehension
321K1 understand the role story elements play in evaluating material
322C1 understand how phonetic development expands vocabulary through the use of structure analysis in word recognition
323A1 understand the use of library and reference material
323B1 understand correct study skills
324A1 understand the use of literature for practice and pleasure
324B1 understand basic literary forms
331C1 understand and demonstrate the standards of legibility in handwriting
332B1 understand the parts of speech
332C1 understand the use of capitalization and punctuation
333C1 understand the roles of proofreading, word meaning and word building skills in spelling
334A1 understand the elements of a complete sentence
334B1 understand paragraph organization and development
334C1 understand the elements of style in written composition
334D1 understand the contribution of creative thinking to writing
334E1 understand functional writing
334F1 understand revision and proofreading skills in writing
335A1 develop critical and creative thinking skills
336A1 understand the use of listening skills in processing information
336B1 understand analyzing, interpreting and judging information in listening
337A1 understand the relationship between vocabulary development and oral/ written communication
337B1 use standard English in communicating effectively
337C1 demonstrate effective self-expression

Mathematics

311A1 understand written numerical representation
311A2 understand place value
311A3 understand comparing numbers (whole, fractional, decimal)
311B1 understand concept and computation of addition, subtraction, multiplication, and division
311B4 understand the properties of multiplication
311C1 understand fractional representation
311C2 understand comparing fractional representations
311C3 understand decimal notation
311D1 understand graphic construction
311D2 understand estimation skills (reasonableness, prediction)
311E1 understand solving number sentences including ones with missing subtrahends, factors and addends
311E2 understand solving word problems involving number patterns, statistical data, currency and time
311F1 understand metric and U.S. linear measure, capacity and weight using instruments of measurement
311F5 understand perimeter and area
311F6 understand using currency
311G1 understand basic two and three geometric figures
311G2 understand basic geometric elements

Music

381A3 understand steady beat
381A9 be aware that notation can represent rhythm and melody
381B1 understand that melodies can move up or down
381B3 develop a repertoire of children's songs
381B8 develop good singing skills
381C1 understand music can be fast or slow; loud or soft
381C3 be aware of the uniqueness of various band and orchestra instruments
381D1 be aware that a piece of music can be organized into sections that can be the same or different
381D6 be aware of musical dramatic works and of great composers
381E1 be aware voices and instruments can produce harmony
381F2 be aware that folk songs, dances, and types of instruments from various cultures can be different

Art

371A1 understand people create many types of art in many different ways using a variety of materials, tools, and techniques
371B3 understand original art is the result of creative thinking, problem solving and observation
371D1 understand artists are influenced by their environment
371E1 understand how to use elements of art such as lines, shapes, textures and colors
371E2 understand how to use some principles of design such as: balance, emphasis, spatial relationships, contrast, form, unity, movement
371B5 understand how to use subject matter, themes, events and symbols in works of art
371B6 understand how to distinguish characteristics that create various styles in works of art
371C5 understand how to view and discuss works of art
371C4 understand how to correlate areas of visual, performing, and literary arts

Physical Education

391A1 understand skills involved in a variety of games and sports
391A2 understand the implements used in games and sports
391A3 understand spatial relationships in object manipulation
391B1 understand and demonstrate knowledge of safety
391B2 understand the relationship between muscular tension and body control
391B3 understand the contribution of gymnastics to body control and self-confidence
391B4 understand gymnastics and movement vocabulary
391C1 understand the relationship between regular physical activities and fitness
391C2 understand the relationship between physical exercise and nutrition
391D1 understand the role of rhythmic activities in enhancing movement
391D2 understand the role of body control in movement

Technology

301A2 understand historical aspects of technology
301B2 understand the functions of the major computer system
301B3 know procedures to initiate and terminate equipment operation
301C1 be aware technological functions can aid in the effective management of information
301C4 know various ways technology is used in our daily lives
301D1 develop a strategy (algorithm) for performing a task
301D4 understand rudimentary statements of a high level language such as LOGO
301E1 understand how and why technology is used in schools, homes and businesses

THIRD GRADE FRAMEWORK

Communities

341A1 know specific places within the local community and understand how they may change
341B1 understand how individual families have contributed to the cultural heritage of the community
341C1 be aware of the laws and values of the community
341C2 understand who makes laws in the community
343C1 understand the relationship of local governments to the state and the nation
341C3 understand issues and concerns of the community
341D2 understand how individuals contribute to the economic growth of the community
341E2 understand individuals contribute different skills to the community
342A1 understand landforms, climate and natural resources often determine the location and the growth of a community
342A2 be aware of the relationship in location of one's community to other communities
342B1 be aware of when and why a community developed and changes that may have occurred
342B2 understand early communities were responsible for producing their own food
342E3 understand how technological advances will change communities of the future
342F1 understand how large cities of the world influence cultural, economic and political aspects of the global community
343A1 understand geographical features have influenced the interdependence of communities in the state
343C2 understand the increased interdependence of world communities has led to international laws
343D1 be aware goods and services are interchanged between communities at the local, state and national level
343D2 understand how communities are interdependent with other communities in the world
361A1 understand the influence of individual health upon community health
361A2 understand the relationship between available health services and the quality of community health
361A3 be aware of the agencies available in communities
342E1 understand people with like cultures may live together
342B5 understand the effect of industrialization on availability of jobs

Growth and Development

361H1 understand the influence and effects of personal health practices on growth and development
352G1 understand the function, growth and development of various body systems
361C3 understand the role of personal choice on individual and community health
361G1 understand how foods affect the quality of health
361G3 understand the definition of nutrients and nutrition
361G2 understand the importance of cleanliness in handling and consuming food
361B1 understand the importance of obtaining reliable information regarding health products and services
361B3 understand the effects of self diagnosis and self medication
361C4 be aware of communicable and noncommunicable diseases, including AIDS
361C1 understand ways of preventing and controlling various diseases
361E1 understand how family members contribute to the mental and emotional health of one another
361E2 be aware and respect the rights of others
361F4 understand the influence group norms have on behavior
361F3 understand how feelings affect behavior
361E3 understand the relationship between personal rights and the rights of others
361F1 understand how individual qualities make people unique
361F2 understand the effect of physical changes on personality

Safety

361J1 understand certain commonly used substances may be misused
361I1 understand safety procedures for natural or man-made disasters
361I2 understand the importance of first aid and emergency care
361I3 develop an awareness of sexual abuse and self protection skills for personal safety
361J2 understand emergency procedures and resources related to substance abuse
361J3 understand alternative activities and regulations governing substance use and abuse

Matter/Energy

351A1 understand the scientific meaning of work
351A2 understand types of simple machines and how they use energy
351A3 understand the occurrence of friction
351A4 understand the importance of safety in the use of machines
351D1 be aware of basic components of the atomic theory
351D2 be aware of the properties of the three states of matter
351D3 be aware of forms of energy and energy conservation
353L3 understand various kinds of rocks and how they are formed
353L4 understand the rock-soil cycle
353L5 understand factors which cause changes in the earth's surface

Geography

342A3 understand the United States has different agricultural and industrial regions
342B4 understand the effect of mechanization on agriculture
343A2 understand technological advances have allowed people to overcome geographical features and become interdependent
343A3 understand the use of physical and political maps

Environment

343F1 understand the world's people depend on each other for resources, protection and the solution of problems
344C2 be aware governmental agencies, both local and national, have been formed to protect the environment
361D2 understand how natural resources may be either used or misused
361D3 understand ways of conserving natural resources
361D1 understand the importance of technology in wise use of natural resources and the impact to humans and the environment
353L6 understand how some man-made changes can be controlled
354O1 understand the effect of environmental change to inhabitants
354P1 understand the basic concept of habitat and how habitats can be preserved

Plants and Soil

353L1 understand some living and non-living components of soil
353L2 understand the different kinds of soil
352F1 understand how plants reproduce
352F2 understand the functions of parts of a plant
352F3 understand environmental factors which affect plant growth and how plants adapt to the environment

Solar System

353J1 understand the composition of the solar system
353J2 understand the similarities and differences among planets
353J3 understand the earth-sun-moon relationship
353J4 understand man-made satellites and their uses

FOURTH GRADE FRAMEWORK

Language Arts

421A1 understand the importance of reading with proper expression
421C1 understand the role of context in identifying word meaning
421D1 understand the role of sequencing in comprehension
421E1 understand how details enhance comprehension
421F1 understand main idea/ central message in reading comprehension
421G1 understand the role of prediction in comprehension
421H1 understand characterization as an element of comprehension
421I1 understand factors involved in supporting a conclusion
421J1 understand cause and effect as a means to comprehension
421K1 understand the role of story elements in evaluating material
422C1 understand how phonetic development expands vocabulary through the use of structural analysis in word recognition
423A1 understand the use of library and reference materials
423B1 use reference and study skills correctly
424A1 understand the use of literature for information and pleasure
424A2 understand basic literary forms
431C1 understand and demonstrate the standards of legibility in handwriting
432B1 understand parts of speech
432C1 understand the use of capitalization and punctuation
433A1 understand the sound/ symbol relationship to spelling
433C1 understand the roles of proofreading, word meaning and word building skills in spelling
434A1 understand the elements of sentence structure
434B1 understand paragraph organization and development
434C1 understand the elements of style in written composition
434D1 understand creative expression through writing
434E1 understand functional writing
434F1 understand revision and proofreading skills in writing
435A1 develop creative and critical thinking skills
436A1 understand the use of listening skills in processing information
436B1 understand analyzing, interpreting and judging information in listening
437A1 understand the relationship between vocabulary development and oral/ written communication
437B1 use standard English in communicating effectively
437C1 demonstrate effective self-expression

Mathematics

411A1 understand numerical representation
411A2 understand the relative value of numbers
411A3 understand writing numbers in expanded form
411A4 understand rounding numbers
411A5 understand number patterns
411A6 understand comparing numbers (whole, fractions, decimal)
411B1 understand concept and computation of addition, subtraction, multiplication and division
411C1 understand fractional representation
411C2 understand equivalent fractions
411C3 understand addition and subtraction computation of fractions
411C5 understand decimal notation
411C6 understand the relationship between fractions and decimal numbers
411C7 understand addition and subtraction computation of decimal numbers
411D1 understand grids
411D2 understand using graphic data including charts and tables
411D3 understand estimation (reasonableness, prediction)
411E1 understand the development of number pattern sentences
411E2 understand using numbers
411E3 understand solving word problems
411E4 understand solving problems involving time money, and graphic data
411F1 understand metric and U.S. measurement
411F2 understand perimeter and area
411F3 understand time relationships
411G1 understand angles

Music

481A3 understand steady beat
481A9 be aware that notation can represent rhythm and melody
481B1 understand that melodies can move up or down
481B3 develop a repertoire of children's songs
481B8 develop good singing skills
481C1 understand music can be fast or slow; loud or soft
481C3 be aware of the uniqueness of various band/orchestra instruments
481D1 be aware that a piece of music can be organized into sections that can be the same or different
481D6 be aware of musical dramatic works and great composers
481E1 be aware that voices and instruments can produce harmony
481F2 be aware that folk songs, dances, and types of instruments from various cultures can be different

Art

471A1 understand people create many types of art in many different ways using a variety of materials, tools, and techniques
471B3 understand original art is the result of creative thinking, problem solving and observation
471D1 understand artists are influenced by their environment
471E1 understand how to use elements of art such as lines, shapes, textures and colors
471E2 understand how to use some principles of design such as: balance, emphasis, spatial relationships, contrast, form, unity, movement
471B5 understand how to use subject matter, themes, events and symbols in works of art
471B6 understand how to distinguish characteristics that create various styles in works of art
471C5 understand how to view and discuss works of art

Physical Education

491A1 understand the role of body control in games and sports
491A2 understand the role of proper skill execution in games and sports
491A3 understand the importance of warm-up activities in games and sports
491B1 understand and demonstrate knowledge of safety
491B2 understand postural factors involved in successful performance in physical activities such as gymnastics
491B3 understand gymnastics may include the use of apparatus
491B5 understand spatial relationships in movement
491C1 understand the basic components of physical fitness
491C2 understand the relationship between the components of fitness and being physically fit
491D1 understand the relationship between rhythmic activities and movement
491D2 understand how ideas can be expressed through movement

Technology

401A2 understand historical aspects of technology
401B2 understand functions of the major computer system
401B3 know procedures to initiate and terminate equipment operation
401C1 be aware technological functions can aid in the effective management of information
401C4 know various ways technology is used in our daily lives
401D1 develop a strategy for performing a task (algorithm)
401D4 understand rudimentary statements of a high level language such as LOGO
401E1 understand how and why technology is used in schools, homes and businesses
443D7 understand technology continues to bring about change in Tennessee

FOURTH GRADE FRAMEWORK

History/Geography

441A1 understand a natural region has a uniform landform, soil, climate, vegetation, and natural resources
441A2 understand natural regions are represented on different types of maps
441A3 know region by using longitudinal and latitudinal lines
441B1 be aware of the relationship between the history of a region and its location, natural setting, natural resources and natural changes
441C1 understand natural boundaries are not necessarily the same as political boundaries
441D1 be aware some regions are more prosperous and dependent upon natural resources
441D2 know regions differ in the production of goods and services
441F1 understand regional dependence exists for goods and services
442C1 understand some laws conflict with beliefs of some cultural groups
442D1 be aware of the relationship of supply and demand
442E2 know customs, languages, religions, traditions and similarities of various cultural groups
442F1 understand groups migrate as forces act upon them
444B2 be aware of individuals who have had a major impact on our society
445C3 be aware of different political organizations within towns, cities, counties, states, nations, cantons, provinces, and the United Nations
445F1 know social and political organizations make decisions and respond to governments and economics of other nations

Tennessee

443A2 know regions and landforms of Tennessee and how they affected settlement of the state
443A4 understand the climate of Tennessee and how it affects vegetation
443A5 know the natural resources of Tennessee
443B1 know important events in the history of Tennessee
443B2 understand geographical, economic, political and social factors have affected the history of Tennessee
443B3 understand Indians were the first settlers in Tennessee
443B4 know various groups who settled in Tennessee
443B5 know the role and contributions made by Black Tennesseans
443C2 know Tennessee has a constitution and how it affects its citizens
443C3 know the branches of government
443C6 understand interaction of local, state and national governments
443D3 know the major industrial and agricultural products of the state
443E2 understand Indians continue to inhabit Tennessee and maintain their established culture
443F1 know the population of Tennessee is becoming more culturally diverse
443F2 understand Tennessee interacts with other states and nations

Energy

451B1 understand the principles of magnetism
451B2 understand the types and parts of a complete electric circuit
451B4 understand the principles of conduction
451C1 understand the properties of sound, heat and light
452E1 understand the increasing complexity of cellular organization from cell to organism

Environment

442E5 know how technology can make cultures similar
442A3 understand how people pollute the land, water and air
442E1 understand ways of living differ from one society to another
442E6 know all societies have some form of religion
444C3 understand all societies develop means of establishing and enforcing laws
454O2 understand environmental concerns within the local community
454O3 understand how urban and rural environmental problems vary
454O4 understand the relationship between individuals and the environment
461B2 understand the role of agencies, groups, laws and standards in protecting consumers of health related products
411D1 understand the relationship between population, size and environment
461D2 understand the effects of over-population on all living things
441E1 understand how natural features of a region have affected the development of cultures and population growth
453K1 understand weather and the effect of changing atmospheric conditions
453K2 understand how weather predictions are made
453M1 understand the physical features of oceans
453M2 understand the relationship among ocean food chains
453M3 understand resources provided by the ocean
442A1 be aware people depend upon land resources and must make decisions about using them

Growth and Development

461A1 identify influential public, professional, and voluntary agencies and their roles in community health
461A2 understand various factors influencing health care services in a community
443D2 understand every individual is a producer and consumer of goods and services
461B1 understand methods used in marketing health related products
444E2 understand choice of career is influenced by numerous factors
444B1 understand how people's roles in society change
445E1 understand differences in roles within groups
461C4 understand how to establish personal health goals
461G1 understand the relationship of food and exercise to good health
461H1 understand the relationship between personal health practices and well-being
461F2 recognize people react differently in the same situation
461F3 be aware actions produce consequences
461E1 understand the nature of friendship and the qualities that make a good friend
461E2 understand the impact of such factors as peer pressure, family background, and community standards on a person's life
461E3 understand love and caring as basic human needs
461F3 understand different ways in which emotions may be expressed
461I4 understand the difference between appropriate and inappropriate touch
461F2 identify characteristics of positive interpersonal relationships
461C1 understand different classifications of diseases, including HIV/AIDS, how they are spread and methods of protection
461J1 understand how drugs/medicines may be used properly or misused and the effect on individuals
461J3 understand the reasons why some people choose to misuse drugs and alternative choices
452E2 understand distinguishing characteristics of selected vertebrates and invertebrates
452G1 understand the sensory organs including their function and care

Safety

461E4 identify guidelines for conduct when home alone
461I1 understand various safety measures that help prevent accidents
461I3 understand basic steps in providing first aid to the sick or injured

FIFTH GRADE FRAMEWORK

Language Arts

521A1 understand the importance of reading with proper expression
521C1 understand the role of context in identifying word meaning
521D1 understand the role of sequencing in comprehension
521E1 understand how details enhance comprehension
521F1 understand main idea/ central message in reading comprehension
521G1 understand the role of prediction in comprehension
521H1 understand characterization as an element of comprehension
521I1 understand factors involved in supporting a conclusion
521J1 understand cause/effect as a means to comprehension
521K1 understand the role of story elements in evaluating material
522C1 understand how phonetic development expands vocabulary through the use of structural analysis in word recognition
523A1 understand the use of library and reference materials
523B1 use reference and study skills correctly
524A1 understand the use of literature for information and pleasure
524A2 understand basic literary forms
531C1 understand and demonstrate the standards of legibility in handwriting
533A1 understand the sound/ symbol relationship to spelling
533C1 understand the roles of proofreading, word meaning and word building skills in spelling
534A1 understand the elements of a complete sentence: capitalization, punctuation and parts of speech
534B1 understand paragraph organization and development
534C1 understand the elements of style in written composition
534D1 understand creative expression through writing
534E1 understand functional writing
534F1 understand revision and proofreading skills
535A1 develop creative and critical thinking skills
536A1 understand the role of skilled listening in the information-gathering process
536B1 understand analyzing, interpreting and judging information in listening
537A1 understand the relationship between vocabulary development and oral/ written communication
537B1 use standard English in communicating effectively
537C1 demonstrate effective self-expression

Mathematics

511A3 understand factorization
511A4 understand comparing numbers (whole, fraction, decimals)
511B2 understand multiplication and division computation
511C1 understand the conversion of fractions
511C2 understand concept and computation of addition, subtraction and multiplication of fractions
511C5 understand decimal notation
511C6 understand the relationship between fractions and decimal numbers
511C7 understand concept and computation of addition, subtraction, and multiplication of decimal numbers
511D1 understand mean and median
511D2 understand construction and interpretation of graphs including circle graphs
511D3 understand estimation
511E1 understand number sentences
511E2 understand solving word problems including time, money, measurements and graphs
511F1 understand converting within systems of measure
511F2 understand using geometric formulas
511F3 understand operations with measurements
511F4 understand computing area including triangles
511G1 understand congruency
511G2 understand the relationship between lines and angles

Music

581A3 understand steady beat
581A9 be aware notation can represent rhythm and melody
581B1 understand melodies can move up or down
581B3 develop a repertoire of children's songs
581B8 develop good singing skills
581C1 understand music can be fast or slow; loud or soft
581C3 be aware of the uniqueness of various band/orchestra instruments
581D1 be aware a piece of music can be organized into sections that can be the same or different
581D6 be aware of musical dramatic works and great composers
581E1 be aware voices and instruments can produce harmony
581F2 be aware that folk songs, dances, and types of instruments from various cultures can be different

Art

571A1 understand people create many types of art in many different ways using a variety of materials, tools, and techniques
571B3 understand original art is the result of creative thinking, problem solving and observation
571D1 understand artists are influenced by their environment
571E1 understand how to use elements of art such as lines, shapes, textures and colors
571E2 understand how to use some principles of design such as: balance, emphasis, spatial relationships, contrast, form, unity, movement
571B5 understand how to use subject matter, themes, events and symbols in works of art
571B6 understand how to distinguish characteristics that create various styles in works of art
571C5 understand how to view and discuss works of art
571C4 understand how to correlate areas of visual, performing, and literary arts

Physical Education

591A1 understand how academic skills may be developed through games and sports
591A2 understand basic game rules and their purposes
591A4 understand the effect of participation in group activities on individual performance
591B1 understand and practice safety procedures
591B2 understand the basic principles of posture in gymnastics
591B3 understand the use of various apparatus
591B4 increase muscular strength through participation
591B5 understand spatial relationships in movement
591C1 understand how muscular strength and cardiovascular endurance affect physical fitness
591C3 understand how flexibility affects physical fitness
591C4 understand the measurement and improvement of the basic components of physical fitness
591D1 understand the relationship between rhythmic activities and cultural heritage

Technology

501A2 understand historical aspects of technology
501B2 understand functions of major computer system
501B3 know procedures to initiate and terminate equipment operation
501C1 be aware technological functions can aid in the effective management of information
501C4 know various ways technology is used in our daily lives
501D1 develop a strategy (algorithm) for performing a task
501D4 understand rudimentary statements of a high level language such as LOGO
501E1 understand how and why technology is used in schools, homes and businesses

FIFTH GRADE FRAMEWORK

U.S. History/Geography

541A1 understand the use of a global grid
541A2 know the size, shape, boundaries and landforms of the United States
541E1 be aware of people who lived in the United States prior to exploration and colonization
541B1 understand why explorers came from many nations seeking new routes to the east
544A1 understand cultures were attracted and impeded by a variety of landforms, climate, vegetation, soil and natural resources in the nation
541B2 be aware of religious, economic and political reasons for colonization
541B3 understand how conflicts with the British led to independence
542B1 understand how the thirteen colonies developed
541B4 understand how expansion of the nation created conflict
541C1 understand how laws and regulations have changed to cope with changes in society
541C3 understand why governments were formed at local, state and national levels
541D1 understand how the economy of the United States influences world economy
541D2 understand the effect of increased industrialization and urbanization upon careers
541E2 understand the influence of migration and immigration upon cultural composition
541E3 understand how people of the United States have adapted to many changes
541F1 understand how events in American history have influenced and been influenced by events in other parts of the world
542B3 understand how the legal system has evolved
542C1 understand the individual's role in government
542C2 understand why America formed its own government and how democracy developed
542C3 understand the structure and function of the United States government as presented in the constitution
542F1 understand emerging nations have patterned their constitutions after the United States
543C2 understand the Bill of Rights provides for individual rights and responsibilities
543E1 understand individuals from diverse cultural groups have contributed to ideas and institutions of American society
544B1 understand major events in the nation's history brought diverse cultural groups to the United States
544B2 understand the roles and contributions made by Blacks and other minority groups in American history
544D1 understand certain regions of the nation specialize in producing certain goods and services causing interdependence of regions

Environment

541A4 understand variations of climate within the United States
541A5 understand how natural resources have affected changes in the United States
541B5 understand the impetus for rapid technological change resulting from natural resources of the nation
553M1 understand the structure and constant changing of the ocean floor
553M2 understand changes which occur in the oceans and their effect on the earth
553M3 understand relationships among oceans, weather and climate
554N2 understand the kinds, uses and problems associated with renewable and non-renewable resources
552F1 understand the structure and function of plant parts
552F2 understand the basic types and characteristics of seed bearing and non-seed bearing plants
552F3 understand how green plants differ from non-green plants
552F4 understand the oxygen-carbon dioxide cycle
554P1 understand the importance of plants and animals within the local community
554N1 understand the relationship between energy and the environment
541D3 understand the necessity for changes to meet future needs of society
561A1 understand social and environmental factors that contribute to good community health
561A2 understand home/school responsibilities in regard to community health
561D2 understand the relationship of wise use of natural resources to good health
561G2 understand the relationship between environmental factors and eating patterns
561I2 understand the effects of environmental factors on health and safety

Energy/Work

551A1 understand the relationship of simple and complex machines
551A2 understand the effect of machines on force
551A3 understand the relationship of friction to the functioning of machines
551D2 understand the kinds and forms of energy
554N3 understand why alternative energy forms are important
551D1 understand the structure and properties of matter
551D4 be aware of atomic and molecular structure

Growth and Development

561I1 understand the relationship between human behavior and accidents
543F1 understand individual decisions affect and are affected by national and world events
544E1 understand various cultural groups in the nation may differ in family structure, language, tools and religion
543E2 understand common needs and goals emerge as individuals interact in groups
544E3 understand requirements for individual and group efforts to solve problems and resolve conflicts
561E3 understand the importance of social support and ways to develop a positive support network
561F1 understand factors involved in healthy relationships
561F3 understand how actions produce consequences
561C3 understand the effects of stress on the body
561I4 understand assertive self-protection skills and identify resources for skill assistance
561B2 understand the role of various health related specialists
561B3 understand the effect of advertising methods used in selling health products
561B1 understand the effect of emotions, family relationships, and values on the selection and use of health information, products and services
561E1 understand the importance of various types and patterns of interpersonal relationships for maintaining good health
561G1 understand the effect of food nutrients on health
561G3 understand the relationship of food intake to total body health
561H1 understand the relationship between personal health choices and individual well-being
552I1 understand microscopic organisms
561H2 understand the functions of human anatomy
561E2 understand the changes associated with puberty
552G2 understand diseases associated with the body systems
561C2 understand the role of public health personnel in preventing and controlling the spread of disease
561C1 understand communicable diseases, including HIV/AIDS, (transmission and prevention)
561I3 identify the characteristics of sexual abuse including inappropriate and appropriate touch
561J1 understand how drugs/medicines are beneficial to society
561J2 understand why various commonly used substances are not essential for a healthy, happy life
561J3 understand consequences of making choices to misuse drugs/medicines and develop strategies for saying "no"

SIXTH GRADE FRAMEWORK

Language Arts

621C1 understand the role of context in identifying word meaning
621D1 understand the role of sequencing in comprehension
621E1 understand how details enhance comprehension
621F1 understand main idea and central message in reading comprehension
621G1 understand the role of prediction in comprehension
621H1 understand characterization as an element of comprehension
621I1 understand factors involved in supporting a conclusion
621J1 understand cause and effect as a means to comprehension
621K1 understand the role of story elements in evaluating material
622C1 understand the role of structural analysis in word recognition
623A1 understand the use of library and reference materials
623B1 use reference and study skills correctly
624A1 understand the use of literature for information and pleasure
624A2 understand basic literary forms and their elements
631C1 understand and demonstrate the standards of legibility in handwriting
633C1 understand the roles of proofreading, word meaning and word building skills in spelling
634A1 understand the elements of a complete sentence: capitalization, punctuation and parts of speech
634B1 understand paragraph organization and development
634C1 understand the elements of style in written composition
634D1 understand creative expression through writing
634E1 understand functional writing and the importance of revision and proofreading skills
635A1 develop creative and critical thinking skills
636A1 understand the use of listening skills in gathering information
636B1 understand analyzing, interpreting and judging information in listening
637A1 understand the relationship between vocabulary development and oral/written communication
637B1 use standard English in communicating effectively
637C1 demonstrate effective self-expression

Mathematics

611A3 understand exponential form
611A4 understand comparing numbers (whole, fraction, decimal, percent)
611C1 understand addition, subtraction, multiplication, and division computation of fractions
611C5 understand decimal numbers
611C6 understand addition, subtraction, multiplication and division concept and computation of decimal numbers
611C7 understand multiplication computation of decimal numbers
611C8 understand the concept of decimal division
611C9 understand division computation of decimal numbers
611D1 understand measures of control tendency to include mean, median, and range
611D2 understand the use of probability
611D3 understand estimation
611E1 understand solving word problems
611E2 understand mathematical expressions and equations
611E3 understand number sentences
611E4 understand interpreting schedules
611F1 understand converting within systems of measure
611F3 understand computation of area and volume
611F4 understand the measurement of angles
611G1 understand intersecting and non-intersecting lines
611G2 understand polygons and circles
611H1 understand ratio and proportion
611H2 understand percent

Music

681A3 understand steady beat
681A9 be aware notation can represent rhythm and melody
681B1 understand melodies can move up or down
681B3 develop a repertoire of children's songs
681B8 develop good singing skills
681C1 understand music can be fast or slow, loud or soft
681C3 be aware of the uniqueness of various band/orchestra instruments
681D1 be aware that a piece of music can be organized into sections that can be the same or different
681D6 be aware of musical dramatic works and great composers
681E1 be aware that voices and instruments can produce harmony
681F2 be aware folk songs, dances, and types of instruments from various cultures can be different

Art

671A1 understand people create many types of art using a variety of materials, tools, and techniques
671B3 understand original art is the result of creative thinking, problem solving and observation
671D1 understand artists are influenced by their environment
671E1 understand how to use elements of art: textures lines, shapes, and colors
671E2 understand how to use some principles of design such as: balance, emphasis, spatial relationships, contrast, form, unity, movement
671B5 understand how to use subject matter, themes, events and symbols in works of art
671B6 understand how to distinguish characteristics that create various styles in works of art
671C5 understand how to view and discuss works of art
671C4 understand how to correlate areas of visual, performing, and literary arts

Physical Education

691A1 understand how strategy, affects performance in games and sports
691A2 understand the development of attitudes and values through games and sports
691B1 know and practice rules of safety
691B2 understand specific skills required in gymnastics
691B3 understand factors affecting the relationship of movement to space
691B4 understand the importance of equilibrium, balance and weight transfer in gymnastics
691C1 understand the importance of daily patterns of activity in maintaining fitness
691C2 understand factors which affect the status of health and fitness
691D1 understand the value of rhythmic activities in social development and expression
691D2 understand the value of rhythmic activities in the development of fitness

Technology

601A1 understand historical aspects of technology
601B4 understand operation of systems using prepared software and menu driven programs
601B5 understand operation of systems using system commands and program statements
601C1 understand how technological functions can aid in the effective management of information
601C5 understand the value of software in computer operations
601D1 understand development of strategies (algorithm) for performing a task
601D2 know the steps in performing a task
601D3 understand how to analyze tasks to determine appropriate technology for problem solving
601D4 understand rudimentary statements, commands, and structures of at least one high level language such as LOGO or BASIC
601E1 understand how and why technology is used in all aspects of life
601E2 know the availability of technology-related jobs within the next five years
601E3 understand the positive and negative aspects of technology
601E4 be aware of technology use for the future

SIXTH GRADE FRAMEWORK

History

641A1 understand geographic centers of early civilization
641B1 be aware of the importance of irrigation, agriculture, writing, education, law and trade in the development of early civilizations
641B3 understand important leaders and events in the growth of ancient Greek and Roman cultures
641B4 understand the rise and decline of ancient civilizations
641C3 be aware of different governmental structures among ancient civilizations
641C4 know the importance of the concept of written laws handed down from ancient civilizations
641D1 understand the impact of trade on the economy of early civilizations
641D2 understand the change from food gathering to food production
641E2 understand the importance of fire, weapons and tools to early civilizations
642C2 understand the influence of religion on the development of early codes of law
642D1 understand how the growth of capitalism has affected economic growth of nations
642D2 understand the relationship between industrial progress and the rise of labor organizations
642F1 know the importance of social, political and economic organizations and institutions in dealing with international issues
643B2 understand the historical impact of such forces as feudalism, nationalism and imperialism
643C1 understand basic differences between democracy and other forms of government
643C2 understand problems faced by newly independent nations
643F1 understand how problems have arisen in determining national boundaries
643C3 understand the impact of international affairs on national policy
643C4 understand the relationship between abundance of resources and political power of a nation
643D2 understand the effect of colonization upon a nation's economy
643D3 understand the influence of trade restrictions
643E1 know the importance of the concept of tribal groups in certain cultures
643E2 understand the effect of a caste system upon people and nations
644B3 know important explorers and explorations at various times and in different parts of the world
644D1 understand how interdependence among nations in economic trade and industry affects the standard of living

Sociology

641B2 understand the development of major religions among both eastern and western ancient cultures
641E1 understand the maintenance of customs, values and lifestyles among early civilizations
642B1 understand how the desire of people to influence decisions leads to the establishment of social and political organizations
642B2 understand the increasing complexity of societies resulting in changes in social and political organizations
642C1 understand the necessity of societies establishing and enforcing rules and laws
642C4 understand the role of government in regulating the rights of citizenship
643B1 understand how inventions and discoveries brought about changes in societies
643F2 understand how interaction among nations affects habits, values and lifestyles of people
644B2 understand the difference between national independence and individual freedom
644E1 understand the importance of heritage
644E2 understand changing roles of minorities and women
644F1 understand the impact of improved transportation and communication
644F2 understand the growth and importance of cultural exchange among nations

Growth and Development

661I1 understand and practice rules of safety
661A2 understand the importance of services for the handicapped
661A1 understand the importance of organizations to the status of health in a community
661D2 understand the effects of technology on health
661B1 understand the various techniques utilized in marketing health products and services
661H2 understand the importance of personal health practices to the process of growth and development
661G1 understand criteria for making proper decisions concerning food selection including use of the seven dietary guidelines
661B2 understand the potential results of self-diagnosis, self-medication, and unwise use of various products and services
661J1 understand factors which motivate individuals to misuse drugs
661J2 understand the effects of drug misuse and abuse on society
661J3 understand knowledge of individual needs, goals, and values contributes to wise decision-making for medicines and drugs
661C2 understand characteristics, causes, prevention, and transmission of various types of diseases, including HIV/AIDS
661H1 understand the importance of decisions, habits, and lifestyle to personal well-being
661E1 understand changes associated with puberty
661F1 understand personality traits which enhance mental health
661E2 understand how heredity affects the body
661F2 understand and practice effective communication skills
661I3 define sexual abuse and understand assertive self-protection skills
661F3 understand the consequences of decision making

Energy

651B1 understand the principle of magnetism
651B2 understand the construction of a magnet
651B3 understand various methods of producing electricity
651B4 understand the structure of batteries
651B5 understand the importance of observing safety rules in the use of electricity
651C1 understand the properties of sound
651C2 understand the scientific meaning of heat
654N3 understand alternative energy forms
654N1 understand how communities meet energy demands

Environment

641F1 know the relationship between scarcity of resources and conflict among cultures
643A2 understand how mankind's use of the natural environment is related to perceived wants and needs
643A3 know the impact of technology in changing people's relationship to the environment
644F3 know certain problems such as pollution, are global concerns
661D1 understand the effects of various pollutants
653L1 understand the composition and characteristics of various layers of the earth
653L2 understand forces on the surface and within the earth which cause changes
661I2 understand appropriate response to both natural and man-made disasters
654P1 understand the factors which influence the stability of ecosystems
653J1 understand the various components of the universe
653J2 understand the effects of space exploration

Plants and Animals

652F1 understand the process of cellular respiration and photosynthesis
652H1 understand how traits are passed from parent to offspring
652H2 understand sexual and asexual reproduction in plants and animals

SEVENTH GRADE FRAMEWORK

Language Arts

721C1 utilize various methods of vocabulary development/ word identification (context, sight words, phonetics)
721D1 understand the role of sequencing in comprehension
721E1 understand how details enhance comprehension
721F1 understand main idea/ central message in reading comprehension
721G1 understand the role of prediction in comprehension
721H1 understand characterization as an element of comprehension
721I1 understand factors involved in supporting conclusions
721J1 understand cause and effect as a means to comprehension
721K1 understand the elements of evaluation in reading comprehension
722C1 understand the role of structural analysis in word recognition
723A1 understand the use of library and reference materials
723B1 use reference and study skills correctly
724A1 understand the use of literature for information and pleasure
724B1 understand basic literary forms and their elements
731B1 understand the relationship between personal handwriting style and correct letter formation
731C1 understand the standards of legibility in handwriting
733C1 understand the roles of proofreading, word meaning and word building skills in spelling
734A1 understand the elements of a complete sentence: capitalization, punctuation and parts of speech
734B1 understand paragraph organization and development
734C1 understand the elements of style in written composition
734D1 understand creative expression through writing
734E1 understand functional writing and the impact of revision and proofreading skills on clarity
735A1 develop creative and critical thinking skills
736A1 understand the role of skilled listening in the information-gathering process
736B1 understand the role of skilled listening when analyzing, interpreting, and judging information
736D1 understand how to evaluate personal listening skills
737A1 understand the relationship between vocabulary development and oral/ written communication
737B1 use standard English in communicating effectively
737C1 demonstrate effective self-expression

Mathematics

711A1 understand place value and rounding
711A2 understand the rules of divisibility and factorization
711A3 understand perfect squares and their square roots
711A4 understand integers
711B1 understand and compute addition and subtraction of integers
711C1 understand and compute multiplication and division of fractions
711C2 understand converting between fractions and decimals
711C4 understand and compute division of decimal numbers
711D1 understand the uses of statistical representation
711D2 understand probability
711D3 understand graphing ordered pairs
711D4 understand estimation
711E1 understand solving word problems including integers and variables
711E2 understand applying problem solving strategies
711E3 understand mathematical expressions and equations
711F1 understand computing the circumference of a circle
711F2 understand conversions of measurement systems
711G1 understand simple geometric constructions
711G2 understand triangle classifications
711H1 understand the relationship between fractions, decimals and percents
711H2 understand use of percents and percentage statements

Music

781A1 understand the elements of music through playing classroom instruments and singing
781A3 understand the elements of music through reading, writing and creating music
781A5 understand the elements of music through moving and listening
781B1 understand the unique use of the elements of music in various historical periods, world cultures and various types of American popular music
781C1 understand the role of music in the environment
781C2 understand the influence of technology in creating, producing and consuming music

Art

771A3 understand the historical/ cultural origin, style and significance of selected periods and works of art
772A3 understand how to describe, analyze, interpret and judge works of art
773B1 understand how to create imagery that reflects ideas, feelings and values
772B2 understand how aesthetic sensitivity can be developed by comparing works of art and the environment
773B2 understand how to use creative thinking and problem solving skills to produce original art
772C1 be aware that art can contribute to the quality of daily life which includes careers and the consumer
772C5 be aware of interrelationships among the arts
773C9 understand how to prepare and display works of art
773E1 understand how to use the elements and principles of design in works of art
773F7 understand how to prepare and maintain a portfolio of works of art

Physical Education

791A1 understand how the development of attitudes, strategies and values affect performance in games and sports
791B1 understand factors which contribute to safety
791B2 understand the specific skills involved in gymnastics
791B3 understand the elements of body movement and control in gymnastics
791C1 understand the importance of daily activity patterns in maintaining fitness
791C2 understand ways individuals maintain a degree of fitness throughout life
791C3 understand the relationship of the body systems to the development and maintenance of fitness
791D1 understand the various forms of rhythmic expression and their value

Technology

701A1 understand historical aspects of technology
701B4 understand operation of systems using prepared software and menu driven programs
701B5 understand operation of systems using system commands and program statements
701C1 understand how technological functions can aid in effective management of information
701C5 understand the value of software in computer operations
701D1 understand development of strategies (algorithm) for performing a task
701D2 know the steps in performing a task
701D3 understand how to analyze tasks to determine appropriateness of use of technology for problem solving
701D4 understand rudimentary statements, commands, and structures of at least one high level language such as LOGO or BASIC
701E1 understand how and why technology is used in all aspects of life
701E2 know the availability of technology-related jobs within the next five years
701E3 understand the positive/ negative aspects of technology
701E4 be aware of technology use for the future

SEVENTH GRADE FRAMEWORK

Tennessee History

741A1 understand the diversity of Tennessee's physical geography and its impact on the state's historic, economic and cultural development
741A2 understand the major developments in the area that became Tennessee prior to and during European exploration
741A3 understand the European settlement of Tennessee, the resulting conflicts with Native Americans and the role of Tennesseans in the American Revolution
741A4 understand the events that led to statehood for Tennessee
741A5 understand the Tennessee Constitution and its relationship to the United States Constitution and national government
741A6 understand Tennessee's leadership role in the expansion of the young republic
741A7 understand political, economic and social developments in antebellum Tennessee
741A8 understand causes of the Civil War as reflected by Tennessee's sectional differences
741A9 understand the role of Tennessee during the Civil War
741A10 understand the political, social and economic changes brought to Tennessee through Reconstruction
741A11 understand the problems and progress that characterized Tennessee at the turn-of-the-century
741A12 understand the impact of the Great Depression and World War II on Tennessee and the nation
741A13 understand political and social changes that came to Tennessee in the post-World War II years
741A14 understand the growing diversity of Tennessee's economy and its impact on national and world markets
741A15 understand the organization and structure of state and local government

World Geography

741A1 understand the definition, purpose and tools of geography
741A2 understand the earth, its structure and elements
741A3 understand different characteristics and influences of physical features, natural resources and climates on the people of:
North America
Latin America
Africa
Asia
Europe
Soviet Union
Oceania
741A4 understand the concept of global interdependence and its application

Growth and Development

752G1 understand the structure and function of body systems and their interrelationships
761G1 understand variables affecting individual nutritional requirements
752G2 understand factors basic to good nutrition
761G2 contrast fad and balanced diets
761G3 recognize different methods for analyzing adequacy of food intake
761C1 understand the relationship of mental, emotional, and social factors to disease prevention
761K3 understand the transmission and prevention of HIV/AIDS
761H1 understand health problems associated with adolescence
761H2 understand the effects of emotional and social forces on personal health behavior
761J1 understand the use of drugs in improving health
761J2 understand the harmful effects of misuse of drugs
761J3 understand how to utilize personal power to resist substance abuse
761I1 understand how personal desires and social pressures relate to risk behaviors
761E1 understand the importance of healthy experiences with family and peers in achieving psycho-social sexual maturity
761E2 understand different forms of love at various stages of development
761E3 understand the importance of communication skills in the development of appreciation of others
761F1 understand various forms and components of effective communication
761F2 understand the causes, effects and ways of handling stress
761F3 understand the importance of goal setting and positive thinking techniques in decision making

Plants and Animals

752E1 understand the taxonomic divisions of the animal kingdom
752E2 understand the development of animals and their body systems
752F1 understand the broad taxonomic divisions of the plant kingdom
752F2 understand the development of plants and their systems
752I1 understand the basic structure and function of plant and animal cells
752I2 understand the mechanics of cellular division
752I3 understand the importance of microscopic life

Matter and Energy

751A1 understand the use of simple and compound machines
751D1 understand the structure of matter
751D2 understand the relationship between energy and matter
751D3 understand the laws of motion
751D4 understand how scientific data is gathered and interpreted

Environment

761A1 understand individual, community, state, national, and international environmental responsibilities
761B1 understand the role of government in regulating health products and services
761C2 understand the role of agencies and organizations in disease control
761I2 understand factors involved in disaster modification and control
761B2 understand the effect of advertising techniques (individual and environment)
761D1 understand the influence of environmental factors on physical development, health conditions and survival
761D2 understand the causes and effects of world population problems
753K1 understand factors affecting the earth's weather
753K2 understand the role of meteorologists in predicting weather
753K3 understand how weather conditions contribute to weathering and erosion
753M2 understand the physical features and the diversity of resources in the oceans
754P1 understand the relationships of organisms in ecosystems

EIGHTH GRADE FRAMEWORK

Language Arts

821C1 utilize various methods of vocabulary development/ word identification(context, sight word, phonetics)
821D1 understand the role of sequencing in comprehension
821E1 understand how details enhance comprehension
821F1 understand main idea/ central message in reading comprehension
821G1 understand the role of prediction in comprehension
821H1 understand characterization as an element of comprehension
821I1 understand factors involved in supporting a conclusion
821J1 understand cause and effect as a means to comprehension
821K1 understand the elements of evaluation in reading comprehension
822C1 understand the role of structural analysis in word recognition
823A1 understand the use of library and reference materials
823B1 use reference and study skills correctly
824A1 understand the use of literature for information and pleasure
824B1 understand basic literary forms and their elements
831B1 understand the relationship between personal handwriting style and correct letter formation
831C1 understand the standards of legibility in handwriting
833C1 understand the roles of proofreading, word meaning and word building skills in spelling
834A1 understand the elements of a complete sentence: capitalization, punctuation and parts of speech
834B1 understand paragraph organization and development
834C1 understand the elements of style in written composition
834D1 understand creative expression through writing
834E1 understand functional writing and the impact of revision and proofreading skills on clarity
835A1 develop creative and critical thinking skills
836A1 understand the role of skilled listening in the information-gathering process
836B1 understand the role of skilled listening when analyzing, interpreting, and judging information
836D1 understand how to evaluate personal listening skills
837A1 understand the relationship between vocabulary development and oral/ written communication
837B1 use standard English in communicating effectively
837C1 demonstrate effective self-expression

Mathematics

811A1 understand and use positive square roots
811A2 understand evaluating expressions
811B1 understand and compute multiplication and division of integers
811C1 understand rational numbers
811C3 understand scientific notation
811D1 understand the uses of statistical information and representation
811D2 understand probability
811D3 understand estimation
811E1 understand solving one and two step equations
811E2 understand solving multi-step word problems
811E3 understand and solve distance, rate and time problems
811F1 understand computing the area of trapezoids and circles
811F2 understand computing the volume of cylinders and spheres
811F3 understand and use Pythagorean Theorem
811G1 understand polygons
811H1 understand using proportions
811H2 understand and compute percent of increase and decrease
811H3 understand and compute cost, simple interest and commission

Music

881A1 understand the elements of music through playing classroom instruments and singing
881A3 understand the elements of music through reading, writing and creating music
881A5 understand the elements of music through moving and listening
881B1 understand the unique use of the elements of music in various historical periods, world cultures and types of American popular music
881C1 understand the role of music in the environment
881C2 understand the influence of technology in creating, producing and consuming music

Art

871A3 understand the historical/ cultural origin, style and significance of selected periods and works of art
872A3 understand how to describe, analyze, interpret and judge works of art
873B1 understand how to create imagery that reflects ideas, feelings and values
873B2 understand how to use creative thinking and problem solving skills to produce original art
873B4 understand how to produce art using a variety of subject matter such as themes, metaphors, symbols or allegories
873B5 understand how to produce works of art that reflect political, religious, moral, economic or social reality
872C5 be aware of interrelationships among the arts
873C9 understand how to prepare and display works of art
873E1 understand how to use the elements and principles of design in works of art
873F7 understand how to prepare and maintain a portfolio of works of art

Physical Education

891A1 understand strategies affecting performance in games and sports
891A2 understand the development of attitudes and values through games and sports
891B1 understand factors which contribute to safety
891B2 understand skills involved in gymnastics
891B3 understand the elements of body movement and control in gymnastics
891C1 understand the importance of daily activity patterns in maintaining fitness
891C2 understand ways individuals maintain fitness throughout life
891C3 understand the relationship of body systems to fitness
891D1 understand various forms of rhythmic expression and their value

Technology

801A1 understand historical aspects of technology
801B4 understand operation of systems using prepared software and menu driven programs
801B5 understand operation of systems using system commands and program statements
801C1 understand how technological functions can aid in effective management of information
801C5 understand the importance of software to computer operations
801D1 understand development of strategies (algorithm) for performing a task
801D2 know the steps in performing a task
801D3 understand analyzing tasks to determine appropriate use of technology for problem solving
801D4 understand rudimentary statements, commands, and structures of at least one high level language such as LOGO or BASIC
801E1 understand how and why technology is used in all aspects of life
801E2 know the availability of technology-related jobs within the next five years
801E3 understand the positive/ negative aspects of technology
801E4 be aware of technology use for the future

EIGHTH GRADE FRAMEWORK

United States History

841A1 understand the geographic regions, climate patterns and natural resources of North America
841A2 understand the social, economic and political reasons for European exploration and colonization of the New World
841A3 understand events leading to English domination of North America
841A4 understand the governments, economies and different lifestyles of the thirteen American colonies
841A5 understand the causes, major events and personalities of the American Revolution
841A6 understand the weakness of the Articles of Confederation and how the United States Constitution created a stronger central government while protecting the rights of citizens
841A7 understand the problems and accomplishments of the young American republic
841A8 understand the expansion and development of the United States during the Jacksonian Democracy era
841A9 understand the sectional differences that evolved as the American frontier expanded and the country developed culturally and economically
841A10understand the causes, course and consequences of the Civil War
841A11understand the changes in American society brought about by the Industrial Revolution
841A12understand the concept of Imperialism and the establishment of the United States as a world power
841A13understand the causes and accomplishments of the Progressive Era
841A14understand events leading to American entry into World War One and the subsequent role played by American military forces
841A15understand America's return to isolationism and the disillusionment of the Roaring Twenties
841A16understand causes and effects of the Great Depression and the major efforts of the New Deal
841A17understand the causes and worldwide scope of American involvement in World War II
841A18understand causes and events of the Cold War and its impact on American policies at home and abroad
841A19understand changes in American society brought about by the Civil Rights movement, technological advances and economic and political challenges from other nations
841A20understand American involvement in world conflicts since World War II

Growth and Development

852H1 understand human growth and development
852H2 understand the principles and laws of genetics
861C1 understand the prevention, control and effects of disease
861C2 understand factors affecting health and the transmission of diseases
861K3 understand the transmission and prevention of HIV/AIDS
861H2 understand the immediate and long-range effects of decisions concerning personal health
861H3 understand how to make a health risk appraisal
861A1 understand the availability and role of public health services in community health
861B1 understand individual responsibility in choosing health products and services
861B2 identify differences among various health related careers
861G1 understand how nutrition affects physical, mental, emotional, and social development
861G2 understand cultural differences in relation to food habits
861G3 recognize different methods for analyzing adequacy of food intake
861J2 identify characteristics of addictive behavior
861J4 understand enabling behaviors as they relate to addiction
861J1 understand the proper use of drugs as medication
861J5 understand factors involved in wise and safe use of drugs
861J3 understand major drug treatment programs and their importance
861E1 understand the need for and the forms of companionship
861E2 understand similarities and differences between male and female
861E3 understand criteria for healthy dating behavior
861E4 understand the importance of communication and listening skills in developing caring relationships
861F3 develop steps in making decisions in managing boredom and depression
861H1 understand unique traits of adolescents
861F1 understand factors affecting the development of values
861F2 understand causes, effects and ways of handling stress

Environment

851D1 understand basic steps of the scientific method
851D2 understand the chemical and physical properties of matter
853L1 understand the characteristics of geologic time
853L2 understand the structure and composition of the earth
853L3 understand the causes and effects of various forces upon the earth
854N1 understand environmental resources and how to conserve them
854O1 understand the importance of maintaining the quality of our environment
861D1 understand the effect of pollution on ecosystems
861D2 understand the importance of energy conservation and pollution control
861D3 understand the existence of attitudinal differences between environmentalists and many industrialists
861D4 understand each individual affects the environment
861I1 understand the relationship of environmental and human factors to the risk of accidents
861I2 understand ways of coping with various kinds of disasters

Energy

851B1 understand how electricity and magnetism are produced, measured and used
851C1 understand how sound, heat and light are produced, measured and used

Space

853J1 understand the movement of celestial objects
853J2 understand how space technology has enhanced our knowledge

ORNL/TM-12145
Dist. Category UC-400

INTERNAL DISTRIBUTION

1. M. A. Akerman
2. T. D. Anderson
3. B. R. Appleton
4. C. J. Archer
5. L. D. Armstrong
6. B. G. Ashdown
7. P. W. Baird
8. J. B. Ball
9. B. B. Bevard
10. D. E. Blair
11. J. S. Bogard
12. D. J. Bostock
13. J. K. Bryson
14. H. M. Butler
15. W. W. Carpenter
16. D. A. Casada
17. R. D. Cheverton
18. J. L. Cook
19. J. M. Corum
20. D. C. Cox
21. W. G. Craddick
22. D. F. Craig
23. A. E. Cross
24. P. I. Davis
25. J. G. Delene
26. A. L. Dietzler
27. L. B. Dunlap
28. B. G. Eads
29. C. M. Egert
30. A. E. Ekkebus
31. G. G. Fee
32. J. E. Ferguson
33. M. H. Fontana

34-58. R. A. Fortner

59. E. C. Fox
60. W. Fulkerson
61. L. C. Fuller
62. U. Gat
63. R. K. Genung
64. H. A. Glovier
65. C. A. Grametbauer
66. S. R. Greene
67. C. W. Griffith
68. B. H. Handler
69. P. E. Hall
70. S. C. Harris
71. F. C. Hartman
72. M. J. Hollis
73. C. C. Hopkins
74. L. L. Horton
75. R. L. Huddleston

76-100. C. R. Hudson

101. K. A. Ingle
102. J. E. Jones Jr.
103. W. F. Jones
104. W. K. Kahl
105. S. V. Kaye
106. S. B. Kennedy
107. H. T. Kerr
108. J. E. Kibbe
109. T. S. Kress
110. M. W. Kohring
111. F. C. Kornegay
112. P. J. Kortman
113. E. H. Krieg
114. C. B. Landguth

115-119. T. L. Lashley

120. T. C. Liu
121. C. R. Luttrell
122. W. R. Martin
123. L. C. Maxey
124. G. T. Mays
125. R. M. McAfee
126. R. N. McGill
127. P. L. McKenney
128. L. E. McNeese
130. S. A. Meacham
131. J. R. Merriman
132. J. R. Montgomery
133. O. B. Morgan
134. H. L. Moseley
135. G. A. Murphy
136. F. R. Mynatt

137-139. E. Nall

140-143. D. G. O'Connor
144. M. Olszewski
145. L. J. Ott
146. W. P. Poore
147. M. L. Poutsma
148. D. S. Queener
149. S. Rajic
150. D. E. Reichle
151. R. L. Reid
152. J. B. Richard
153. C. R. Richmond
154. R. C. Riepe
155. J. B. Roberto
156. M. W. Rosenthal
157. T. H. Row
158. J. P. Sanders
159. R. D. Seals
160. R. M. Schilling
161. G. T. Scudder
162. J. Sheffield
163. R. B. Shelton
164. W. D. Shults
165. D. K. Shum
166. I. I. Siman-Tov
167. M. Siman-Tov
168. D. B. Simpson
169. K. W. Sommerfeld
170. A. Sozer
171. R. H. Staunton
172. J. O. Stiegler
173-174. T. K. Stovall
175. J. H. Swanks
176. W. W. Teer, Jr.
177. T. J. Theiss
178-179. B. B. Thomas
180. J. J. Tomlinson
181. A. W. Trivelpiece
182. R. I. Van Hook
183-207. C. L. Wagner
208. R. C. Ward
209. D. A. Waters
210. S. B. Webb
211. B. H. West
212. C. D. West
213. G. E. Whitesides
214. E. W. Whitfield
215. R. N. Whitmore
216. K. A. Williams
217. V. K. Wilkinson
218. R. M. Wilson
219. J. T. Woodward, Sr.
220. J. W. Wooten
221. T. H. Wynn
222. G. L. Yoder
223. A. Zucker
224. Central Research Library
225. Document Ref. Section
226. Patent Office
227-228. Lab Records
229. Lab Records, RC

EXTERNAL DISTRIBUTION

230. C. C. Akin, Oliver Springs Elementary School, 317 Roane Street, Oliver Springs, TN 37840.

231. L. Barden, College of Education, Rm. 301 CEB, University of Tennessee, Knoxville, TN 37966-3400.

232-236. S. P. Bugas, American Museum of Science and Energy, 300 S. Tulane, Oak Ridge, TN 37830.

237-241. B. G. Chambers, Science Supervisor, Knox County Department of Public Instruction, P.O. Box 2180, Knoxville, TN 37901.

242. J. Cook, 436 Sugarwood Drive, Knoxville, TN 37922.

243-244. S. C. Crass, Oliver Springs Elementary School, 317 Roane Street, Oliver Springs, TN 37840.

245. R. Davis, Eisenhower Mathematics and Science Education Program, U.S. Department of Education, ED/OESE/SED/SIP Room 2040, 400 Maryland Avenue SW, Washington, D.C. 20202-6140.

246-247. R. M. Davis, Oliver Springs Elementary School, 317 Roane Street, Oliver Springs, TN 37840.

248. G. Farmer, Department of Education Curriculum and Instruction, Cordell Hull Building 4th Floor North Wing, Nashville, TN 37243-0379.

249. K. Hanna, Department of Education Curriculum and Instruction, Cordell Hull Building 4th Floor North Wing, Nashville, TN 37243-0379.

250. R. High, National Diffusion Network, College of Education/BERS, University of Tennessee, Knoxville, TN 37996-3504.

251. R. O. Hultgren, Energy Research and Development, DOE Oak Ridge Field Office, P.O. Box 2008, Oak Ridge, TN 37831-6269.

252. J. Jackson, Roane County Adopt-A-School Office, 100 Bluff Road, Kingston, TN 37763.

253. M. D. Marsee, American Museum of Science and Energy, 300 S. Tulane, Oak Ridge, TN 37830.

254. W. H. McKenzie, Phi Kappa Phi Vice President for the Southeastern Region, Department of Genetics, Box 7614, North Carolina State University, Raleigh, NC 27695-7614.

255. J. Miller, Associated Western Universities, 4190 South Highland Drive, Suite 211, Salt Lake City, UT 84124.

256. G. A. Mills, Research Integration Branch, DOE Oak Ridge Field Office, P.O. Box 2008, Oak Ridge, TN 37831-6269.

257. C. Musick, Office of University and Science Education Programs, Office of Energy Research, U.S. Department of Energy, 1000 Independence Avenue SW, Washington, D.C. 20585.

258. M. Myer, College of Education, Rm. 10CEB, University of Tennessee, Knoxville, TN 37966-3400.

259. J. A. Ortman, Office of University and Science Education Programs, Office of Energy Research, U.S. Department of Energy, 1000 Independence Avenue SW, Washington, D.C. 20585.

260. J. N. Plemons, Roane County Schools, 100 Bluff Road, Kingston, TN 37763.

261. L. Reubens, 143 South 15th Street, No. 1, Springfield, OR 97477.

262. D. Richerson, Ceramatec, Inc., 2425 S. 900W, Salt Lake City, UT 84119.

263. D. Sligh, Eisenhower Mathematics and Science Education Program, U.S. Department of Education, ED/OESE/SED/SIP Room 2040, 400 Maryland Avenue SW, Washington, D.C. 20202-6140.

264. S. N. Smith, Roane County School Board, 695 E. Tri-County Boulevard, Oliver Springs, TN 37840.

265. L. M. Sommers, President, Phi Kappa Phi, Department of Geography, Michigan State University, East Lansing, MI 48824.

266. R. Springer, Division of Educational Programs, Argonne National Laboratory, Building 223, Argonne, IL 60439.

267. C. W. Tan, Managing Director of Education, American Society of Mechanical Engineers, 345 E. 47th Street, New York, NY 10017.

268. G. Vann, Oliver Springs Elementary School, 317 Roane Street, Oliver Springs, TN 37840.

269. J. D. Watkins, U.S. Department of Energy, Forrestal Building, Room 7A-257, 1000 Independance Ave. SW, Washington, D.C. 20585.

270. S. W. White, Editor, *National Forum*, 129 Quad Center, Mel Street, Auburn University, Auburn, AL 36849-5306.

271. J. S. Williams, Public Relations Office, Martin Marietta Energy Specialty Components, Inc., 7381 114 Avenue N., Suite 403A, Largo, FL 34643.

272. R. Wilt, Office of Educational Research and Improvement, U. S. Department of Education, Capital Place, Room 522, 555 New Jersey Avenue NW, Washington, D.C. 20208.

273. A. Wohlpart, Science/Engineering Education Division, Oak Ridge Associated Universities, P.O. Box 117, Oak Ridge, TN 37831-0117.

274-275. J. C. Wuethrich, Central High School, 5321 Jacksboro Pike, Knoxville, TN 37918.

276-304. DOE, Office of Scientific and Technical Information, P.O. Box 62, Oak Ridge, TN 37831. Given distribution as shown in DOE/OSTI-4500-R75 under category UC-400.